Humanscale®

Humanscale Pricing and Specification Guide

STS #800015

Price Guide - U.S. Prices effective April 2012

Table of Contents

Seating 1
Lighting 40
Air Purification 53
Monitor Arms 56
Float Table 79
Access Rails 82
Ergo Tools 87
Humanscale and the Environment 99
Terms & Conditions 100

Seating

freedom® Features & Characteristics

With Freedom, the knobs, levers and locks of current-generation task chairs have been replaced by intelligent mechanisms that automatically support the body as it moves from task to task. By minimizing the need for manual controls, Freedom maximizes natural, spontaneous movement, which is essential for a healthy body and a comfortable day's work. Freedom's many features can be enjoyed with virtually no effort.

PHYSICAL CHARACTERISTICS

CUSHIONS
- Molded polyurethane foam cushions
- Optional arm pads and seat have top layer of Technogel®
- Upholstered with a variety of materials customized to the unique form of the cushion

CUSHION PANS, ARMREST SUPPORTS, HEADREST FRAME, AND FIVE-ARM BASE
- Injection-molded, structural, integral color plastics

EXTERNAL FRAME AND OPTIONAL BASE UPGRADE
- Die-cast aluminum with fused plastic coating or polished aluminum finish

STORED ENERGY DEVICES
- Nitrogen-charged gas cylinder for adjustable seat height
- Coil spring in the self-adjusting recline mechanism
- Elastomer spring in the pivoting backrest

OPTIONAL FOOT RING
- Chrome-plated steel ring

STANDARD FEATURES

SELF-ADJUSTING RECLINE
- Intelligent counter-balance recline mechanism automatically provides the right amount of support through the full range of recline motion, regardless of user size and weight
- No tension springs to adjust
- No recline locks to set/release
- During recline, the angle between torso and legs opens up for better body function
- User maintains near-constant eye level during recline

PIVOTING BACKREST
- Extra motion of the backrest during recline automatically adjusts to the changing needs of the spine
- Provides up to 1″ additional lumbar support when needed

SYNCHRONIZED ARMRESTS
- Revolutionary armrests move in tandem to eliminate uneven arm positioning
- Natural lift and release action for immediate repositioning without buttons or locks
- 6″ range of vertical motion to accommodate all users and tasks
- Can be positioned below thigh level for close table or desk work
- Attached to backrest so arms stay in same relation to body during recline
- Duron arm pad for durability and comfort

STANDARD CYLINDER
- Provides seat height range that accommodates 95% of the population

CONTOURED CUSHIONS
- Carefully sculpted to match body contours
- Increased contact area reduces pressure points
- Modular for easy replacement

BODY FIT
- Size adjustable to fit more than 95% of the population
- Adjustments for fit-to-size:
  - Headrest: 5″ vertical adjustment range
  - Seat Height: 5″ adjustment range
  - Seat Depth: 2.25″ adjustment range
  - Backrest/Lumbar Support Height: 3″ adjustment range

HARD CASTERS
- 2.5″ double-wheel casters for carpeted floors

OPTIONAL FEATURES

DYNAMIC HEADREST
- Position-sensitive headrest moves into place when you recline and out of the way when you sit upright
- 5″ vertical adjustment to fit all users
- Moves in the natural arc of head/neck for perfect support through range of recline
- Contoured to cradle the head and neck in comfort

GEL SEAT CUSHION
- Non-degradable, non-compressible Technogel® layer on top of foam core
- Provides maximum pressure distribution
- Offers unmatched, long-term comfort

ARM PAD OPTION
- Standard Flexible Duron
- Duron with Gel for optimal comfort

ADVANCED ARMRESTS
- Pivot at elbow for width adjustment
- Lockable in 5° increments
- Automatic unlock feature when positioned inward and user wishes to exit chair
- 1.25″ longer than Standard Armrests for additional forearm support

CYLINDER OPTIONS
- Low cylinder for small users
- Tall cylinder for very tall users
- High cylinder with foot ring
- Extra-high cylinder with foot ring (Saddle seat only)

FOOT RING
- Polished finish
- Height-adjustable

CASTER OPTIONS
- 2.5″ soft double-wheel casters for hard floors
- Non-rolling glides for fixed-location use
- 2.5″ locking casters

FIREPROOFING
- CAL 133-approved
  - Fireproof barrier between textile and foam
  - Fire-retardant plastics

freedom® Options & Prices

TASK CHAIR

Armless	**F110**
Standard Duron Arms	**F111**
Standard Duron Arms with Matching Textile Cover	**F112**
Standard Duron Gel Arms	**F11X**
Standard Gel Arms with Matching Textile Cover	**F11M**
Advanced Duron Arms*	**F113**
Advanced Duron Arms with Matching Textile Cover*	**F114**
Advanced Duron Gel Arms	**F11D**
Advanced Gel Arms with Matching Textile Cover	**F11C**

TASK CHAIR WITH HEADREST

Armless	**F210**
Standard Duron Arms	**F211**
Standard Duron Arms with Matching Textile Cover	**F212**
Standard Duron Gel Arms	**F21X**
Standard Gel Arms with Matching Textile Cover	**F21M**
Advanced Duron Arms*	**F213**
Advanced Duron Arms with Matching Textile Cover*	**F214**
Advanced Duron Gel Arms	**F21D**
Advanced Gel Arms with Matching Textile Cover	**F21C**

SADDLE SEAT AND PONY SADDLE

Saddle Seat	**F300**
Pony Saddle	**F400**

** Advanced Duron Arms available Q3 2012.*

TEXTILE 0	TEXTILE 1	TEXTILE 2	TEXTILE 3	LEATHER 0	LEATHER 1	LEATHER 2	LEATHER 3
$1,005	$1,025	$1,080	$1,180	$1,365	$1,855	$2,270	$2,425
$1,115	$1,135	$1,190	$1,290	$1,475	$1,965	$2,380	$2,535
$1,140	$1,160	$1,215	$1,315	$1,500	$1,990	$2,405	$2,560
$1,145	$1,165	$1,220	$1,320	$1,505	$1,995	$2,410	$2,565
$1,170	$1,190	$1,245	$1,345	$1,530	$2,020	$2,435	$2,590
$1,200	$1,220	$1,275	$1,375	$1,560	$2,050	$2,465	$2,620
$1,225	$1,245	$1,300	$1,400	$1,585	$2,075	$2,490	$2,645
$1,230	$1,250	$1,305	$1,405	$1,590	$2,080	$2,495	$2,650
$1,255	$1,275	$1,330	$1,430	$1,615	$2,105	$2,520	$2,675
$1,205	$1,225	$1,290	$1,395	$1,615	$2,120	$2,540	$2,720
$1,315	$1,335	$1,400	$1,505	$1,725	$2,230	$2,650	$2,830
$1,340	$1,360	$1,425	$1,530	$1,750	$2,255	$2,675	$2,855
$1,345	$1,365	$1,430	$1,535	$1,755	$2,260	$2,680	$2,860
$1,370	$1,390	$1,455	$1,560	$1,780	$2,285	$2,705	$2,885
$1,400	$1,420	$1,485	$1,590	$1,810	$2,315	$2,735	$2,915
$1,425	$1,445	$1,510	$1,615	$1,835	$2,340	$2,760	$2,940
$1,430	$1,450	$1,515	$1,620	$1,840	$2,345	$2,765	$2,945
$1,455	$1,475	$1,540	$1,645	$1,865	$2,370	$2,790	$2,970
$320	$330	$360	$415	$510	$765	$965	$1,040
$290	$300	$330	$385	$480	$735	$935	$1,010

freedom® Options & Prices

REPLACEMENT PARTS*

Replacement Cushions

Seat (Foam)	S	1222	FC	—
Seat (Gel)	S	1222	GC	—
Back	B	1222	FC	—
Saddle Seat	L	1222	C	—
Pony Saddle	LP	1222	C	—
Headrest	H	1222	FC	—
Standard Duron Arm Pads (Pair)	FA			$50
Advanced Duron Arm Pads (Pair)**	FV			$50
Standard Duron Gel Arm Pads (Pair)	FX			$80
Advanced Duron Gel Arm Pads (Pair)	FD			$80
Standard Duron Arm Pads with Matching Textile (Pair)	FAM	1222	C	—
Advanced Duron Arm Pads with Matching Textile (Pair)**	FVM	1222	C	—
Standard Gel Arm Pads with Matching Textile (Pair)	FXM	1222	C	—
Advanced Gel Arm Pads with Matching Textile (Pair)	FDM	1222	C	—

RETROFIT PARTS*

Retrofit Armrest Kits

Advanced Duron Arms**	KDA	3		$185
Advanced Duron Gel Arms	KA	3		$215
Advanced Duron Arms with Matching Textile**	KDAM	31222	C	—
Advanced Gel Arms with Matching Textile	KAM	31222	C	—

1-Textile Code 2 - Cushion Color 3 - Frame/Cushion Shell Color (G=Graphite, T=Titanium) 4 - Mesh (M,C,T)
** All Freedom Replacement and Retrofit Parts are CAL 133-approved.*
*** Advanced Duron Arms available Q3 2012.*

TEXTILE 0	TEXTILE 1	TEXTILE 2	TEXTILE 3	LEATHER 0	LEATHER 1	LEATHER 2	LEATHER 3
$125	$135	$160	$210	$320	$555	$760	$835
$200	$210	$235	—	—	—	—	—
$120	$130	$155	$205	$315	$550	$755	$830
$135	$145	$195	$240	$345	$585	$795	$870
$120	$130	$180	$225	$330	$570	$780	$855
$105	$115	$125	$145	$170	$240	$305	$380
—	—	—	—	—	—	—	—
—	—	—	—	—	—	—	—
—	—	—	—	—	—	—	—
—	—	—	—	—	—	—	—
$60	$70	$90	$90	$100	$120	$150	$190
$60	$70	$90	$90	$100	$120	$150	$190
$90	$100	$120	$120	$130	$150	$180	$220
$90	$100	$120	$120	$130	$150	$180	$220
—	—	—	—	—	—	—	—
—	—	—	—	—	—	—	—
$195	$205	$215	$215	$225	$250	$285	$330
$225	$235	$245	$245	$255	$280	$315	$360

freedom® Specifications

TASK CHAIR

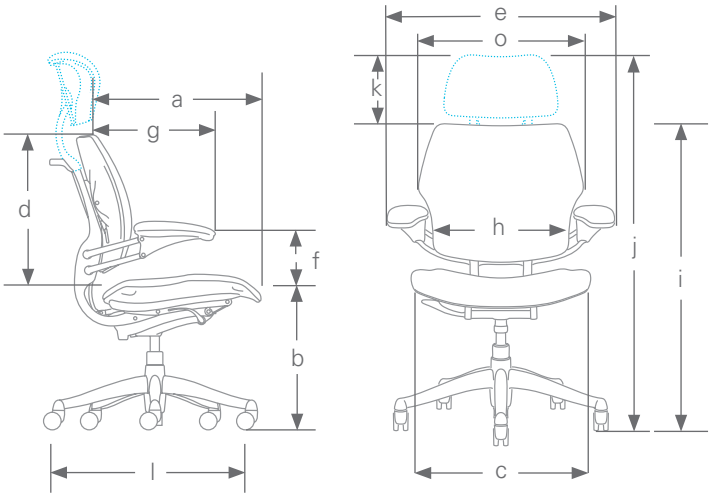

SADDLE SEAT

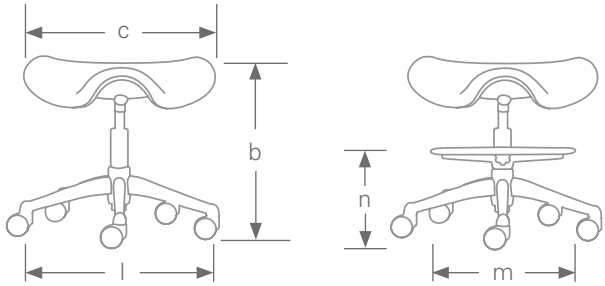

SCOPE OF USERS

- Standard chair fits more than 95% of the office population
  - 5'0" Woman to 6'4" Man
  - 100 to 300 lbs.
- Users outside the standard range can be accommodated by
  - Low or Tall Cylinder
  - Advanced Armrests

WEIGHT

- 35 lbs. Standard Chair
- 39 lbs. Chair with Headrest
- 13.9 lbs. Saddle
- 19 lbs. Saddle with Foot Ring
- 12.5 lbs. Pony Saddle
- 16.5 lbs. Pony Saddle with Foot Ring

BACKREST RECLINE

- 22° recline plus 7° backrest tilt

REFERENCE ANGLE BETWEEN SEAT AND BACK

- 100° to 129°

ADVANCED TASK ARMRESTS

- Horizontal angle change from elbow pivot point
  - 35° each armrest
  - Lockable in 5° increments

HEADREST RADIAL MOTION (automatic motion during recline)

- 30°

LUMBAR SUPPORT INCREASE IN RECLINE

- 1"

CODE	DESCRIPTION	MEASUREMENT
a	seat depth *(from face of lumbar to front of seat)*	16.25″– 18.5″
b	seat height *(floor to compressed front center of seat cushion)*	16″– 21″ standard chair 15.25″– 19″ low-cylinder chair 17″– 22.25″ tall-cylinder chair 20.5″– 28.5″ high-cylinder chair 17.5″– 22.75″ standard Saddle / Pony 20.25″– 28.25″ high Saddle / Pony 23″– 33″ extra-high Saddle / Pony
c	seat width	21″ chair 22″ Saddle seat 16″ Pony Saddle seat
d	backrest height *(from seat cushion to top of backrest)* – adjustment range	18″– 21″ 3″ in 0.25″ increments
e	chair width	27.25″
f	armrest height *(compressed seat cushion to top of armrest)* – adjustment range	5″– 11″ 6″ in 0.33″ increments
g	armrest length *(from face of lumbar to front of armrest)*	13″ standard 14.25″ advanced
h	distance between armrests *(front inside edge)*	20″ standard 11.5″– 21.5″ advanced
i	height, task chair	33.5″– 41.5″ standard chair 32.75″– 39.5″ low-cylinder chair 34.5″– 42.75″ tall-cylinder chair 38″– 49″ high-cylinder chair
j	height, task chair with headrest	43″– 53″ standard chair 42.25″– 51″ low-cylinder chair 44″– 54.25″ tall-cylinder chair 47.5″– 60.5″ high-cylinder chair
k	headrest height adjustment range	5″
l	base diameter	25″ chair, high or extra-high Saddle / Pony 22″ standard Saddle / Pony
m	foot ring diameter	18″ or 21″
n	foot ring height adjustment *(from floor)*	6″– 11″
o	backrest width	21″

freedom® Build Your Product Code

Line	Style	Mech	Armrests	Frame Color	Textile	Textile Color	Gel Seat	Cylinder	Casters	Fire-Proofing	Base Upgrade	Shipping
1	2	3	4	5	6	7	8	9	10	11	12	13
___	___	___	___	___	___	___ ___ ___	___	___	___	___	___	___

COMPONENT	CODE	DESCRIPTION
1 LINE	F	Freedom
2 STYLE	1	Standard Task Chair
	2	Task Chair with Headrest
	3	Saddle Seat
	4	Pony Saddle Seat
3 MECHANISM	1	Standard
	0	Saddle/Pony†
4 ARMRESTS	0	Armless *(Required option for Saddle/Pony)*
	1	Standard Duron Arms
	2	Standard Duron Arms with Matching Textile
	3	Advanced Duron Arms*
	4	Advanced Duron Arms with Matching Textile*
	X	Standard Duron Gel Arms
	M	Standard Gel Arms with Matching Textile
	D	Advanced Duron Gel Arms
	C	Advanced Gel Arms with Matching Textile
5 FRAME COLOR	G	Graphite
	T	Titanium
	A	Polished Aluminum with Graphite shells on cushions and armrests** *(see pricing below)*
	M	Polished Aluminum with Titanium shells on cushions and armrests** *(see pricing below)*
		For A or M, add $250 for Task Chair with Headrest, $230 for Standard Task Chair, $133 for Saddle/Pony
6 TEXTILE		*See pages 35-38 and textile samples for textile codes.*
7 TEXTILE COLOR		*See pages 35-38 and textile samples for color options and codes.*

**Advanced Duron Arms available Q3 2012*
***Comes standard with polished aluminum base.*
† Saddle and Pony Saddle will always ship with aluminum base.

COMPONENT	CODE	DESCRIPTION
8 GEL SEAT	—	Standard Foam Seat Pan
	G[1]	Gel Seat (Add $76)
		(Available only with V, B, H, S, G, K, F or W textiles)
9 CYLINDER	—	Standard 5"
	L	Low 3.75" (Add $26)
	T	Tall 5" (Add $37)
	H[2]	High 8" (Add $37)
	F	High 8" w/18" Foot Ring (Add $110)
	R	High 8" w/21" Foot Ring (Add $152)
	X[2,3]	Extra-High 10" w/18" Foot Ring (Add $110)
	Z[2,3]	Extra-High 10" w/21" Foot Ring (Add $152)
10 CASTERS	—	Standard Hard Casters
	G	Glides (Add $21)
	S	Soft Casters (Add $22)
	K	Locking Casters (Add $112)
11 FIRE-PROOFING	—	Standard Foams and Plastics
	C	CAL 133-Approved Foams and Plastics (Add $75 for Task Chair with Headrest, $59 for Standard Task Chair, $33 for Saddle/Pony)
12 BASE UPGRADE	—†	Standard Composite Base to match Graphite or Titanium frame color
	—†	Standard Aluminum Base to match frame color[4]
	M	Powder-coated Aluminum Base to match Graphite or Titanium frame color (Add $46)
	A	Polished Aluminum Base on Graphite or Titanium Frame (Add $133)
13 SHIPPING	—	Individually Boxed
	B	Blanket Wrapped[5]

Note: Polished Aluminum chairs ship with Polished cylinders. Graphite and Titanium chairs ship with Black cylinders. Extra-high (X, Z) available in Black only.

[1] Not available on Saddle Seat
[2] Only available on Saddle Seat
[3] Requires Glides or Locking Casters
[4] Standard Aluminum Base should be selected with A and M frame colors
[5] See Terms and Conditions, page 100, for minimum order requirements
† Must be selected for Saddle and Pony Saddle.

Liberty® Features & Characteristics

Liberty, with Form-Sensing Mesh Technology, is unlike any mesh chair you've seen or experienced. With its tri-panel construction, Liberty has the body-fitting contours that single-panel stretch mesh chairs simply can't achieve. And it offers perfect lumbar support for everyone, without external devices or manual adjustments. Liberty's mesh back is formed by combining three panels of non-stretch mesh in the same way a tailor combines multiple pieces of material to form a shirt. So its contours are custom-made to both fit and support the human body in unprecedented comfort.

PHYSICAL CHARACTERISTICS

CUSHIONS
- Non-stretch, tri-panel mesh back
- Molded polyurethane foam seat cushion
- Duron arm pads
- Optional arm pads and seats have top layer of Technogel®
- Seats upholstered with a variety of materials customized to the unique form of the cushion

CUSHION PAN, BACK FRAME, FIVE-ARM BASE
- Injection-molded, structural, integral color plastics
- Optional stainless steel caps on base

EXTERNAL FRAME
- Die-cast aluminum with fused plastic coating or polished aluminum finish

STORED ENERGY DEVICES
- Nitrogen-charged gas cylinder for adjustable seat height
- Coil spring in the self-adjusting recline mechanism
- Torsion spring in the pivoting backrest

OPTIONAL FOOT RING
- Chrome-plated steel

STANDARD FEATURES

SELF-ADJUSTING RECLINE
- Intelligent counter-balance recline mechanism automatically provides the right amount of support through the full range of recline motion, regardless of user size and weight
- No tension springs to adjust
- No recline locks to set/release
- During recline, the angle between torso and legs opens up for better body function
- User maintains near-constant eye level during recline

PIVOTING BACKREST
- Extra motion of the backrest during recline automatically adjusts to the changing needs of the spine
- Provides additional lumbar support as needed

FORM-SENSING MESH
- Tri-panel, non-stretch mesh construction creates body-fitting contours and self-adjusting lumbar support for a customized fit
- No external lumbar devices to adjust, break or lose
- Low-abrasion mesh protects clothing
- Modular for easy replacement

STANDARD CYLINDER
- Provides seat height range that accommodates 95% of the population

CONTOURED SEAT CUSHION
- Carefully sculpted to match body contours
- Increased contact area reduces pressure points
- Modular for easy replacement

BODY FIT
- Size adjustable to fit more than 95% of the population
- Form-sensing mesh provides perfect lumbar support—automatically
- Manual adjustments for fit-to-size:
  - Seat Height: 5″ adjustment range
  - Seat Depth: 2.25″ adjustment range

CASTERS
- 3″ casters for carpeted floors

OPTIONAL FEATURES

ARMREST OPTIONS
- Armless
- Fixed armrests
- Height-adjustable armrests with 5″ range of adjustment

GEL SEAT CUSHION
- Non-degradable, non-compressible Technogel® layer on top of foam core
- Provides maximum pressure distribution
- Offers unmatched long-term comfort

ARM PAD OPTIONS
- Standard Flexible Duron
- Duron with Gel for optimal comfort

CYLINDER OPTIONS
- Low cylinder for small users
- Tall cylinder for very tall users
- High cylinder with foot ring

FIREPROOFING
- CAL 133-approved
  - Fireproof barrier between textile and foam
  - Fire-retardant plastics

CASTER OPTIONS
- 3″ soft casters for hard floors
- Non-rolling glides for fixed location use

POLISHED BASE CAPS
- Stainless steel caps on five-star base for wear protection and aesthetic appeal

FOOT RING
- Polished finish
- Height-adjustable
- 18″ or 21″ diameter

Liberty® Options & Prices

CONFERENCE CHAIR

Armless

Fixed Arms

ARM OPTIONS	CODE
Armless	**L110**
Fixed Duron Arms	**L116**
Fixed Duron Arms with Matching Textile Cover	**L117**
Fixed Duron Gel Arms	**L11X**
Fixed Gel Arms with Matching Textile Cover	**L11M**

TASK CHAIR

Adjustable Arms

Height-Adjustable Duron Arms	**L111**
Height-Adjustable Duron Arms with Matching Textile Cover	**L112**
Height-Adjustable Duron Gel Arms	**L11D**
Height-Adjustable Gel Arms with Matching Textile Cover	**L11C**

SIDE CHAIR

Armless	**L400**
Fixed Duron Arms	**L406**
Fixed Duron Arms with Matching Textile Cover*	**L407**
Fixed Duron Gel Arms	**L40X**
Fixed Gel Arms with Matching Textile Cover*	**L40M**

** Available with textile-covered seat only.*

TEXTILE 0	TEXTILE 1	TEXTILE 2	TEXTILE 3	LEATHER 0	LEATHER 1	LEATHER 2	LEATHER 3
$945	$965	$995	$1,045	$1,145	$1,395	$1,605	$1,605
$1,055	$1,075	$1,105	$1,155	$1,255	$1,505	$1,715	$1,715
$1,080	$1,100	$1,130	$1,180	$1,280	$1,530	$1,740	$1,740
$1,085	$1,105	$1,135	$1,185	$1,285	$1,535	$1,745	$1,745
$1,110	$1,130	$1,160	$1,210	$1,310	$1,560	$1,770	$1,770
$1,135	$1,155	$1,185	$1,235	$1,335	$1,585	$1,795	$1,795
$1,160	$1,180	$1,210	$1,260	$1,360	$1,610	$1,820	$1,820
$1,165	$1,185	$1,215	$1,265	$1,365	$1,615	$1,825	$1,825
$1,190	$1,210	$1,240	$1,290	$1,390	$1,640	$1,850	$1,850

MESH	TEXTILE 0	TEXTILE 1	TEXTILE 2	TEXTILE 3			
$510	$550	$570	$595	$615	—	—	—
$600	$640	$660	$685	$705	—	—	—
—	$665	$685	$710	$730	—	—	—
$630	$670	$690	$715	$735	—	—	—
—	$695	$715	$740	$760	—	—	—

Liberty® Options & Prices

REPLACEMENT PARTS†	OPTIONS	CODE			
LIBERTY CONFERENCE/TASK Replacement Cushions	Seat (Foam)	LSF	1222	C	—
	Seat (Gel)	LSG	1222	C	—
	Mesh Backrest	LB	3422		$180
	Fixed Duron Arm Pads (Pair)	LDA	5		$50
	Fixed Duron Gel Arm Pads (Pair)	LGA			$80
	Height-Adjustable Duron Arm Pads (Pair)	LDV	5		$50
	Height-Adjustable Duron Gel Arm Pads (Pair)	LGV			$80
	Fixed Duron Arm Pads with Matching Textile (Pair)	LDAM	1222	C	—
	Fixed Gel Arm Pads with Matching Textile (Pair)	LGAM	1222	C	—
	Height-Adjustable Duron Arm Pads with Matching (Pair)	LDVM	1222	C	—
	Height-Adjustable Gel Arm Pads with Matching Textile (Pair)	LGVM	1222	C	—
LIBERTY SIDE CHAIR Replacement Cushions	Mesh Backrest	LSCB	3422		$180
	Mesh Seat Cushion	LSCS	3422		$180
	Textile-covered Seat Cushion**	LSCSM	31222		—
	Duron Arm Pads (Pair)	LSDA	5		$50
	Duron Gel Arm Pads (Pair)	LSGA			$80
	Duron Arm Pads with Matching Textile Cover (Pair)*	LSDAM	1222		—
	Gel Arm Pads with Matching Textile Cover (Pair)*	LSGAM	1222		—

1 – Textile Code (pages 35-38) 2 – Cushion Color (pages 35-38) 3 – Frame Color (B, V, L, A, P) 4 – Mesh (M, C, T, J, A, N) 5 – Arm Pad Color (S, B)
** Available with textile-covered seat only.*
*** U, E, Z, L, P, R, Y not available on textile-covered seat.*
† All Liberty Replacement and Retrofit Parts are CAL 133-approved.

TEXTILE 0	TEXTILE 1	TEXTILE 2	TEXTILE 3	LEATHER 0	LEATHER 1	LEATHER 2	LEATHER 3
$125	$135	$160	$210	$320	$555	$760	$835
$200	$210	$235	—	—	—	—	—
—	—	—	—	—	—	—	—
—	—	—	—	—	—	—	—
—	—	—	—	—	—	—	—
—	—	—	—	—	—	—	—
—	—	—	—	—	—	—	—
$60	$70	$90	$90	$100	$120	$150	$190
$90	$100	$120	$120	$130	$150	$180	$220
$60	$70	$90	$90	$100	$120	$150	$190
$90	$100	$120	$120	$130	$150	$180	$220
—	—	—	—	—	—	—	—
—	—	—	—	—	—	—	—
$195	$205	$225	$225	—	—	—	—
—	—	—	—	—	—	—	—
—	—	—	—	—	—	—	—
$60	$70	$90	$90	$100	$120	$150	$190
$90	$100	$120	$120	$130	$150	$180	$220

Liberty® Options & Prices

RETROFIT PARTS†	ARM OPTIONS	CODE			
LIBERTY CONFERENCE/TASK Retrofit Armrest Kits	Fixed Duron Arms (Pair)	**LKFD**	35		$120
	Fixed Duron Gel Arms (Pair)	**LKFG**	3		$150
	Height-Adjustable Duron Arms (Pair)	**LKD**	35		$165
	Height-Adjustable Duron Gel Arms (Pair)	**LKA**	3		$200
	Fixed Duron Arms with Matching Textile (Pair)	**LKFDM**	31222	**C**	—
	Fixed Gel Arms with Matching Textile (Pair)	**LKFGM**	31222	**C**	—
	Height-Adjustable Duron Arms with Matching Textile (Pair)	**LKDM**	31222	**C**	—
	Height-Adjustable Gel Arms with Matching Textile (Pair)	**LKAM**	31222	**C**	—
LIBERTY SIDE CHAIR Retrofit Armrest Kits	Fixed Duron Arms (Pair)	**LSKFD**	35		$110
	Fixed Duron Gel Arms (Pair)	**LSKFX**	3		$140
	Fixed Duron Arms with Matching Textile Cover (Pair)*	**LSKFDM**	31222		—
	Fixed Gel Arms with Matching Textile Cover (Pair)*	**LSKFGM**	31222		—

1 – Textile Code 2 – Cushion Color 3 – Frame Color (B,V,L,A,P) 4 – Mesh (M,C,T) 5 – Arm Pad Color (S,B)
** Available with textile-covered seat only.*
† All Liberty Replacement and Retrofit Parts are CAL 133-approved.

TEXTILE 0	TEXTILE 1	TEXTILE 2	TEXTILE 3	LEATHER 0	LEATHER 1	LEATHER 2	LEATHER 3
—	—	—	—	—	—	—	—
—	—	—	—	—	—	—	—
—	—	—	—	—	—	—	—
—	—	—	—	—	—	—	—
$130	$140	$160	$160	$170	$190	$220	$260
$160	$170	$190	$190	$200	$220	$250	$290
$180	$190	$210	$210	$220	$240	$270	$310
$210	$220	$240	$240	$250	$270	$300	$340
—	—	—	—	—	—	—	—
—	—	—	—	—	—	—	—
$120	$130	$150	$150	$160	$180	$210	$250
$150	$160	$180	$180	$190	$210	$240	$280

Liberty® Specifications

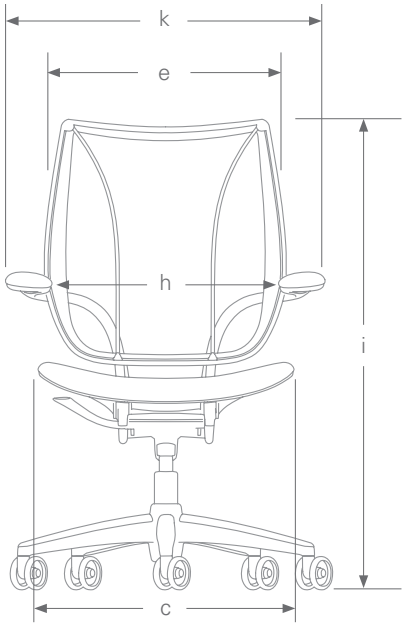

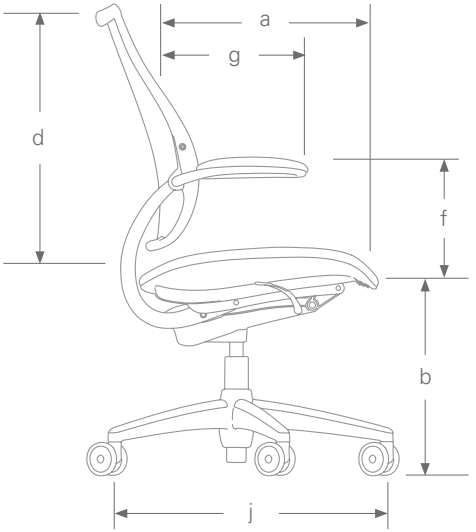

CODE	DESCRIPTION	MEASUREMENT
a	seat depth *(from face of lumbar to front of seat)*	16.5″ – 18.75″
b	seat height *(from floor to compressed front center of seat cushion)*	16″ – 21″ standard chair 15.25″ – 19″ low chair 17″ – 22.25″ tall chair 20.5″ – 28.5″ high chair with foot ring
c	seat width	21″
d	backrest height *(from seat cushion to top of backrest)*	22.5″
e	backrest width	20″
f	armrest height *(from compressed seat cushion to top of armrest)*	10″ fixed 6.5″ – 11.5″ adjustable
g	armrest length *(from face of lumbar to front of armrest)*	12.25″
h	distance between armrests	19″
i	height	38.5″ – 43.5″ standard chair 37.75″ – 41.5″ low-cylinder chair 39.5″ – 44.75″ tall-cylinder chair 43″ – 51″ high chair with foot ring
j	base diameter	25″
k	chair width	26.5″

SCOPE OF USERS

- Conference/Task chair fits more than 95% of the office population
  – 5′0″ Woman to 6′4″ Man
  – 100 to 300 lbs.
- Users outside the standard range can be accommodated by Low or Tall Cylinder

WEIGHT

- 27 lbs. *Conference/Task chair*

TILT AND RECLINE

- 17° recline plus 7° backrest tilt *Conference/Task chair*

REFERENCE ANGLE BETWEEN SEAT AND BACK

- 100° to 124° *Conference/Task chair*

Liberty® Specifications

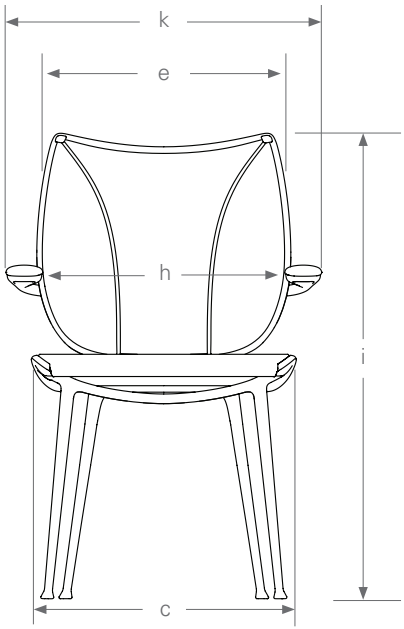

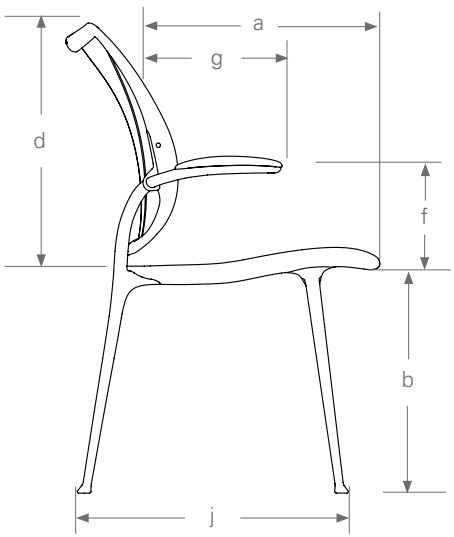

CODE	DESCRIPTION	MEASUREMENT
a	seat depth *(from face of lumbar to front of seat)*	17.5″
b	seat height *(from floor to compressed front center of seat cushion)*	18″
c	seat width	20.75″
d	backrest height *(from seat cushion to top of backrest)*	18.5″
e	backrest width	19.75″
f	armrest height *(from compressed seat cushion to top of armrest)*	9.5″
g	armrest length *(from face of lumbar to front of armrest)*	12″
h	distance between armrests	19.25″
i	height	35.5″
j	base diameter	N/A
k	chair width	24.75″

SCOPE OF USERS

- Side chair fits more than 95% of the office population
  – 5′0″ Woman to 6′4″ Man
  – 100 to 300 lbs.

WEIGHT

- 15 lbs. *Side chair*

Liberty® Build Your Product Code

Line	Style	Mech	Armrests	Frame Color	Backrest Mesh Style	Backrest Mesh Color	Seat Mesh/ Textile Style	Seat Mesh/ Textile Color	Gel Seat	Cylinder	Casters/ Glides	Fire-Proofing	Base Caps	Shipping
1	2	3	4	5	6	7	8	9	10	11	12	13	14	15
—	—	—	—	—	—	— —	—	— — —	—	—	—	—	—	—

For Side Chair codes, skip components 10 through 15

COMPONENT	CODE	DESCRIPTION
1 LINE	L	Liberty
2 STYLE	1	Conference/Task chair
	4	Side chair
3 MECHANISM	0	Side chair
	1	Conference/Task chair
4 ARMRESTS	0	Armless
	1	Adjustable Duron Arms*
	2	Adjustable Duron Arms with Matching Textile*
	6	Fixed Duron Arms
	7	Fixed Duron Arms with Matching Textile†
	X	Fixed Duron Gel Arms
	M	Fixed Gel Arms with Matching Textile†
	D	Adjustable Duron Gel Arms*
	C	Adjustable Gel Arms with Matching Textile*
5 FRAME COLOR	B	Black with Black Trim
	V	Silver with Silver Trim
	L	Silver with Black Trim
	A	Polished Aluminum with Black Trim and Polished Base Caps *(see pricing below)*
	P	Polished Aluminum with Silver Trim and Polished Base Caps *(see pricing below)*
	For A or P, add $131 for Conference/Task chair, $87 for Side chair	
6 BACKREST MESH STYLE	M	Monofilament Stripe
	C	Silver Check
	T	Torque†
	A	Dash
	N	Pinstripe
	J	Catena[1]

*Note: **Frame Color** refers to all metal parts (back support, arm supports), **Trim Color** refers to all plastic parts (base, backrest frame, seat shell, etc.)*

See page 38 and textile samples for mesh descriptions and specifications.

	COMPONENT	CODE	DESCRIPTION	
7	BACKREST MESH COLOR		*See page 38 and textile samples for mesh color options and codes.*	
8	SEAT MESH/ TEXTILE STYLE		*See pages 35-38 and textile samples for textile codes.*	*Note: Extended lead times may apply for Liberty Side Chairs with textile-covered seat. Please consult your Humanscale representative.*
9	SEAT MESH/ TEXTILE COLOR		*See pages 35-38 and textile samples for color options and codes.*	*Note: U, E, Z, L, P, R, Y not available on Side chair*
10	GEL SEAT*	— G	Standard Seat Pan Gel Seat (Add $76)	*Available only with V, B, H, S, F, K, G or W textiles*
11	CYLINDER*	— L T F R	Standard 5" Low 3.75" (Add $26) Tall 5" (Add $37) High 8" w/18" Foot Ring (Add $110) High 8" w/21" Foot Ring (Add $152)	*Note: Silver Trim chairs ship with Polished Aluminum cylinders. Black Trim chairs ship with Black cylinders*
12	CASTERS/* GLIDES	— S G	Standard 3" Casters for carpeted floors Soft Casters Glides (Add $21)	
13	FIREPROOFING	— C	Standard Foams and Plastics CAL 133-Approved Foams and Plastics (Add $44)	*Note: Standard Side Chair is CAL 133-approved*
14	BASE CAPS*	— — A	Standard Base to Match Trim Color Polished Base Caps with Polished Aluminum Frame Polished Base Caps with Black or Silver Frame (Add $43)	
15	SHIPPING	— B	Individually Boxed Blanket Wrapped**	

1 Available Q2 2012
* Not available on Side chair
**See Terms and Conditions, page 100, for minimum order requirements
† On Side chairs available with textile-covered seat only

Diffrient world™ Features & Characteristics

Diffrient World marks Humanscale's first foray into all-mesh task seating. Like its mesh-backed forerunner, Liberty, Diffrient World's tri-panel backrest hugs the body to provide tailor-made lumbar support, while its mesh seat eliminates contact stress under the thighs. But Diffrient World's major innovation is its mechanism-free recline action, which leverages two parts of the chair's frame, the user's body weight, and the laws of physics to provide automatic and balanced support throughout the full range of recline. No chair is more intuitive, creating the ultimate user-friendly sitting experience.

PHYSICAL CHARACTERISTICS

CUSHIONS
- Non-stretch, tri-panel mesh back
- Non-stretch mesh seat
- Optional upholstered polyurethane foam seat cushion

EXTERNAL FRAME
- Injection-molded, structural, integral color glass-filled Nylon 6

STORED ENERGY DEVICES
- Pneumatic cylinder for adjustable seat height

OPTIONAL FOOT RING
- Chrome-plated steel

STANDARD FEATURES

SELF-ADJUSTING RECLINE
- Mechanism-free counter-balance recline action automatically provides the right amount of support through the full range of recline motion, regardless of user size and weight
- No tension springs to adjust
- No recline locks to set/release
- During recline, the angle between torso and legs opens up for better body function
- User maintains near-constant eye level during recline

PIVOTING BACKREST
- Extra motion of the backrest during recline automatically adjusts to the changing needs of the spine
- Provides additional lumbar support as needed

FORM-SENSING MESH
- Tri-panel, non-stretch mesh construction creates body-fitting contours and self-adjusting lumbar support for a customized fit
- No external lumbar devices to adjust, break or lose
- Low-abrasion mesh protects clothing
- Modular for easy replacement and upgrades

NON-STRETCH MESH SEAT
- Automatically sculpts to match body contours
- Cradles the body in flexible, breathable mesh
- Frameless front edge eliminates contact stress under the thighs

STANDARD CYLINDER
- Provides seat height range that accommodates 95% of the population

BODY FIT
- Size adjustable to fit 95% of the population
- Form-sensing mesh provides perfect lumbar support—automatically
- Manual adjustments for fit-to-size:
  - Seat Height: 5″ (127mm) adjustment range
  - Seat Depth: 3.5″ (89mm) adjustment range

CASTERS
- 3″ (76mm) standard hard casters

OPTIONAL FEATURES

ARMREST OPTIONS
- Armless
- Fixed armrests
- Height-adjustable armrests with 3.2″ (81mm) range of adjustment

ARM PAD OPTIONS
- Flexible Duron
- Matching textile-covered arm pad

UPHOLSTERED SEAT CUSHION
- Mesh topped with a thin layer of polyurethane foam
- Upholstered in a variety of textile options

CYLINDER OPTIONS
- Low cylinder for small users
- Tall cylinder for very tall users
- High cylinder with foot ring

FIREPROOFING
- CAL 133-approved

CASTER OPTIONS
- Non-rolling glides for fixed location use
- Optional soft casters for hard floors

FOOT RING
- Chrome finish
- Height-adjustable

Diffrient world™ Options & Prices

CONFERENCE / TASK CHAIR

ARM OPTIONS	CODE
Armless	**W10**
Fixed Duron Arms	**W16**
Fixed Duron Arms with Matching Textile Cover*	**W17**
Height-Adjustable Duron Arms	**W11**
Height-Adjustable Duron Arms with Matching Textile Cover*	**W12**

REPLACEMENT PARTS†

Replacement Cushions	Mesh Backrest	**DWCB**	3422
	Mesh Seat Cushion	**DWCS**	3422
	Textile-Covered Seat Cushion	**DWCSM**	31222
	Fixed Duron Arm Pads (Pair)	**DWFD**	35
	Fixed Duron Arm Pads with Matching Textile Cover (Pair)*	**DWFDM**	1222
	Height-Adjustable Duron Arm Pads (Pair)	**DWAD**	35
	Height-Adjustable Duron Arm Pads with Matching Textile Cover (Pair)*	**DWADM**	1222

RETROFIT PARTS†

Retrofit Armrest Kits	Fixed Duron Arms (Pair)	**DWKFD**	35
	Fixed Duron Arms with Matching Textile Cover (Pair)*	**DWKFDM**	31222
	Height-Adjustable Duron Arms (Pair)	**DWKAD**	35
	Height-Adjustable Duron Arms with Matching Textile Cover (Pair)*	**DWKADM**	31222

1 *– Textile Code (pages 35-38)* ***2*** *– Cushion Color (pages 35-38)* ***3*** *– Frame Color (B, W, V)* ***4*** *– Mesh (M,C,T,J,A,N)* ***5*** *– Arm Pad Color (S,B)*
** Available with textile-covered seat only*
† All World Chair Replacement and Retrofit Parts are CAL 133-approved

MESH	TEXTILE 0	TEXTILE 1	TEXTILE 2	TEXTILE 3
$740	$780	$800	$820	$840
$820	$860	$880	$900	$920
–	$885	$905	$925	$945
$910	$950	$970	$990	$1010
–	$975	$995	$1015	$1035
$140	–	–	–	–
$140	–	–	–	–
–	$180	$200	$220	$240
$45	–	–	–	–
–	$55	$65	$85	$85
$45	–	–	–	–
–	$55	$65	$85	$85
$90	–	–	–	–
–	$100	$110	$130	$130
$180	–	–	–	–
–	$190	$200	$220	$220

SPECIFICATIONS

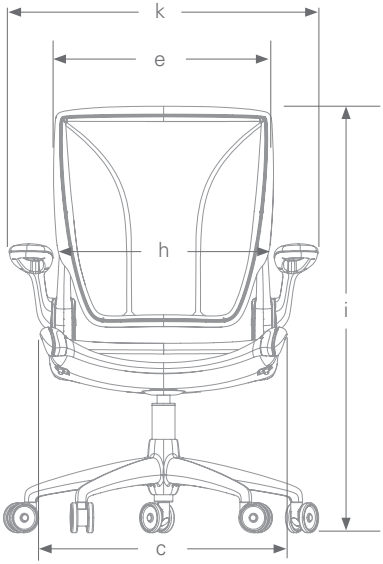

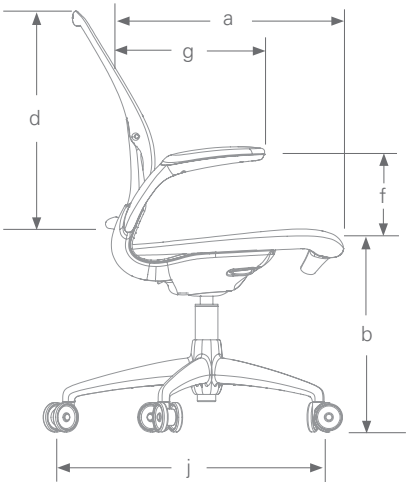

CODE	DESCRIPTION	MEASUREMENT
a	seat depth *(from face of lumbar to front of seat)*	16.5″ – 20″ (419mm – 508mm)
b	seat height *(from floor to compressed front center of seat cushion)*	16″ – 21″ (406mm – 533mm) standard chair 15.25″ – 19″ (387mm – 483mm) low chair 17″ – 22.25″ (432mm – 565mm) tall chair 20.5″ – 28.5″ (521mm – 724mm) high cylinder with foot ring
c	seat width	21.1″ (536mm)
d	backrest height *(from seat cushion to top of backrest)*	23″ (584mm)
e	backrest width	19″ (483mm)
f	armrest height *(from compressed seat cushion to top of armrest)*	9.75″ (248mm) fixed 7.75″ – 11″ (198mm – 279mm) adjustable
g	armrest length *(from face of lumbar to front of armrest)*	12.5″ (318mm)
h	distance between armrests	19″ (483mm)
i	height	36.5″ – 41.5″ (927mm – 1,054mm) standard chair 35.75″ – 39.5″ (908mm – 1,003mm) low-cylinder chair 37.5″ – 42.75″ (953mm – 1,086mm) tall-cylinder chair 41″ – 49″ (1,041mm – 1,245mm) high cylinder chair with foot ring
j	base diameter	24″ (610mm)
k	chair width	26″ (660mm)

SCOPE OF USERS

- Conference/Task chair fits 95% of the office population
  – 5′0″ (152cm) Woman to 6′4″ (193cm) Man
  – 100 to 300 lbs. (45.4kg – 136kg)
- Users outside the standard height range can be accommodated by Low or Tall Cylinder

WEIGHT

- 27 lbs. (12.2kg) Conference/Task chair
- 25 lbs. (11.3kg) Armless chair

TILT AND RECLINE

- 17° recline plus 8° backrest tilt

REFERENCE ANGLE BETWEEN SEAT AND BACK

- 100° to 125°

Diffrient world™ Build Your Product Code

Line	Style	Armrests	Frame Color	Backrest Mesh Style	Backrest Mesh Color	Seat Mesh/Textile Style	Seat Mesh/Textile Color	Cylinder	Casters/ Glides	Base Caps	Shipping
1	2	3	4	5	6	7	8	9	10	11	12
—	—	—	—	—	—	— — —	—	—	—	—	—

COMPONENT	CODE	DESCRIPTION	
1 LINE	W	Diffrient World Chair	*Note: Diffrient World Chair is CAL 133-approved*
2 STYLE	1	Conference/Task Chair	
3 ARMRESTS	0	Armless	*Note: White and Gray frames ship with Gray Duron Arm Pads, Black frame ships with Black Duron Arm Pads*
	1	Adjustable Duron Arms	
	2	Adjustable Duron Arms with Matching Textile*	
	6	Fixed Duron Arms	
	7	Fixed Duron Arms with Matching Textile*	
4 FRAME COLOR	B	Black	*Note: White frame ships standard with Brushed Stainless Steel Caps and translucent casters*
	W	White (Add $40)	
	V	Gray	
5 BACKREST MESH STYLE	M	Monofilament Stripe**	*See page 38 and textile samples for mesh descriptions*
	C	Silver Check**	
	T	Torque**	
	A	Dash	
	N	Pinstripe	
	J	Catena [1]	
6 BACKREST MESH COLOR		*See page 38 and textile samples for mesh color options and codes*	

1 Available Q2 2012
* *Available with textile-covered seat only*
** *M, C, T available on backrest only*

	COMPONENT	CODE	DESCRIPTION	
7	SEAT MESH/TEXTILE STYLE		*See pages 35-38 and textile samples for mesh color options and codes*	*Note: Extended lead times may apply for Diffrient World Chair with textile-covered seat. Please consult your Humanscale representative*
8	SEAT MESH/TEXTILE COLOR		*See pages 35-38 and textile samples for color options and codes*	*Note: U, E, Z, L, P, R, Y not availabile on Diffrient World Chair*
9	CYLINDER	— L T F	Standard 5″ Low 3.75″ (Add $26) Tall 5″ (Add $37) High 8″ w/18″ Foot Ring (Add $110)	*Note: White and Gray frame chairs ship with Chrome cylinders, Black frame chairs ship with Black cylinders*
10	CASTERS/ GLIDES	— S G	Standard Hard Casters Soft Casters Glides (Add $21)	
11	BASE CAPS	— H	Standard Brushed Stainless Steel Caps on Black or Gray Base (Add $21)	
12	SHIPPING	— B	Individually Boxed Blanket Wrapped‡	

‡ *See Terms and Conditions, page 100, for minimum order requirements*

Diffrient smart™ Features & Characteristics

Ideal for any designed environment, Diffrient Smart features aesthetics that are as minimal visually as the chair is functional. And, with its signature weight-sensitive recline, body-fitting Form-Sensing Mesh Technology and unique tri-panel backrest, Diffrient Smart adapts to every user, every time.

PHYSICAL CHARACTERISTICS

CUSHIONS
- Non-stretch, tri-panel mesh back
- Molded polyurethane foam seat cushion
- Duron arm pads
- Seats upholstered with a variety of materials customized to the unique form of the cushion

CUSHION PAN, BACK FRAME, FIVE-ARM BASE
- Injection-molded, structural, integral color plastics

EXTERNAL FRAME
- Die-cast aluminum with powder coating

STORED ENERGY DEVICES
- Nitrogen-charged gas cylinder for adjustable seat height
- Coil spring in the self-adjusting recline mechanism
- Torsion spring in the pivoting backrest

OPTIONAL FOOT RING
- Chrome-plated steel

STANDARD FEATURES

SELF-ADJUSTING RECLINE
- Intelligent counter-balance recline mechanism automatically provides the right amount of support through the full range of recline motion, regardless of user size and weight
- No tension springs to adjust
- No recline locks to set/release
- During recline, the angle between torso and legs opens up for better body function
- User maintains near-constant eye level during recline

PIVOTING BACKREST
- Extra motion of the backrest during recline automatically adjusts to the changing needs of the spine
- Provides additional lumbar support as needed

FORM-SENSING MESH
- Tri-panel, non-stretch mesh construction creates body-fitting contours and self-adjusting lumbar support for a customized fit
- No external lumbar devices to adjust, break or lose
- Low-abrasion mesh protects clothing
- Modular for easy replacement

STANDARD CYLINDER
- Provides seat height range that accommodates 95% of the population

CONTOURED SEAT CUSHION
- Carefully sculpted to match body contours
- Increased contact area reduces pressure points
- Modular for easy replacement

BODY FIT
- Size adjustable to fit more than 95% of the population
- Form-sensing mesh provides perfect lumbar support—automatically
- Manual adjustments for fit-to-size:
  - Seat Height: 5″ adjustment range
  - Seat Depth: 3″ adjustment range

CASTERS
- 3″ casters for carpeted floors

OPTIONAL FEATURES

ARMREST OPTIONS
- Armless
- Fixed armrests
- Height-adjustable armrests with 5″ range of adjustment

CYLINDER OPTIONS
- Low cylinder for small users
- Tall cylinder for very tall users
- High cylinder with foot ring

FIREPROOFING
- CAL 133-approved
  - Fireproof barrier between textile and foam
  - Fire-retardant plastics

CASTER OPTIONS
- Soft casters for hard floors
- Non-rolling glides for fixed location use

POLISHED BASE CAPS
- Stainless steel caps on five-star base for wear protection and aesthetic appeal

FOOT RING
- Polished finish
- Height-adjustable
- 18″ or 21″ diameter

Diffrient smart™ Specifications

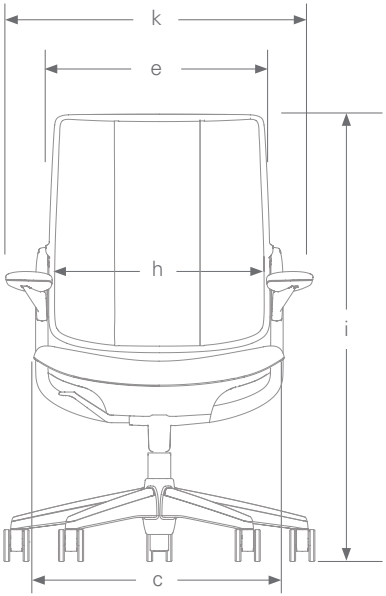

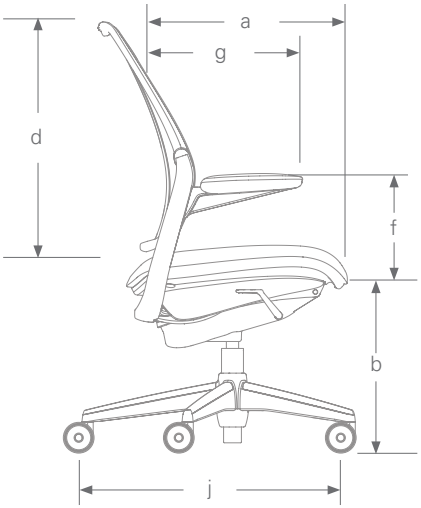

CODE	DESCRIPTION	MEASUREMENT
a	seat depth *(from face of lumbar to front of seat)*	16″ – 19″ (406mm – 483mm)
b	seat height *(from floor to compressed front center of seat cushion)*	16″ – 21″ (406mm – 533mm) standard chair 15.25″ – 19″ (387mm – 483mm) low chair 17″ – 22.25″ (432mm – 565mm) tall chair 20.5″ – 28.5″ (521mm – 724mm) high cylinder with foot ring
c	seat width	21.5″ (546mm)
d	backrest height *(from seat cushion to top of backrest)*	22.5″ (572mm)
e	backrest width	19″ (483mm)
f	armrest height *(from compressed seat cushion to top of armrest)*	8.75″ (222mm) fixed 6″ – 10.5″ (152mm – 267mm) adjustable
g	armrest length *(from face of lumbar to front of armrest)*	12.25″ (311mm)
h	distance between armrests	19″ (483mm)
i	height	39.5″ – 44.75″ (1003mm – 1,137mm) standard chair 38.5″ – 43.5″ (978mm – 1,105mm) low-cylinder chair 43″ – 51″ (1,092mm – 1,295mm) high cylinder chair with foot ring
j	base diameter	26″ (660mm)
k	chair width	26.5″ (673mm)

SCOPE OF USERS

- Conference/Task chair fits 95% of the office population
  – 5′0″ (152cm) Woman to 6′4″ (193cm) Man
  – 100 to 300 lbs. (45.4kg – 136kg)
- Users outside the standard height range can be accommodated by Low or Tall Cylinder

WEIGHT

- 34 lbs. (15kg) Conference/Task chair

TILT AND RECLINE

- 18° recline plus 8° backrest tilt

REFERENCE ANGLE BETWEEN SEAT AND BACK

- 100° to 124°

Diffrient smart™ Options & Prices

CONFERENCE/TASK CHAIR	ARM OPTIONS	CODE
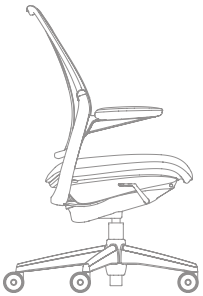	Armless	**S110**
	Fixed Duron Arms	**S111**
	Fixed Duron Arms with Matching Textile Cover	**S112**
	Height Adjustable Duron Arms	**S113**
	Height Adjustable Duron Arms with Matching Textile Cover	**S114**
	4D Height Adjustable Duron Arms*	**S115**
	4D Height Adjustable Duron Arms with Matching Textile Cover*	**S116**

* *Available Q4 2013*

TEXTILE 0	TEXTILE 1	TEXTILE 2	TEXTILE 3	LEATHER 0	LEATHER 1	LEATHER 2	LEATHER 3
$1,080	$1,100	$1,140	$1,200	$1,300	$1,580	$1,820	$1,900
$1,205	$1,225	$1,265	$1,325	$1,425	$1,705	$1,945	$2,025
$1,230	$1,250	$1,290	$1,350	$1,450	$1,730	$1,970	$2,050
$1,290	$1,310	$1,350	$1,410	$1,510	$1,790	$2,030	$2,110
$1,315	$1,335	$1,375	$1,435	$1,535	$1,815	$2,055	$2,135
$1,325	$1,345	$1,385	$1,445	$1,545	$1,825	$2,065	$2,145
$1,350	$1,370	$1,410	$1,470	$1,570	$1,850	$2,090	$2,170

Diffrient smart™

Build Your Product Code

Line	Style	Mech	Armrests	Frame Color	Backrest Mesh Style	Backrest Mesh Color	Seat Textile Style	Seat Textile Color	Seat Pan	Cylinder	Casters/ Glides	Fire-Proofing	Shipping
1	2	3	4	5	6	7	8	9	10	11	12	13	14
—	—	—	—	—	—	— —	—	— — —	—	—	—	—	—

	COMPONENT	CODE	DESCRIPTION
1	**LINE**	S	Smart
2	**STYLE**	1	Task Chair
3	**MECHANISM**	1	Task Chair
4	**ARMRESTS**	0	Armless
		1	Fixed Duron Arms
		2	Fixed Duron Arms with Matching Textile
		3	Adjustable Duron Arms
		4	Adjustable Duron Arms with Matching Textile
		5	4D Adjustable Duron Arms*
		6	4D Adjustable Duron Arms with Matching Textile*
5	**FRAME COLOR**	B	Black Frame with Black Trim
		G**	Dark Gray Frame with Brushed Aluminum Trim (Add $100)
		A**	Black Frame with Brushed Aluminum Trim (Add $100)
6	**BACKREST MESH STYLE**	M	Monofilament Stripe
		C	Silver Check
		T	Torque
		A	Dash
		N	Pinstripe
7	**BACKREST MESH COLOR**		*See page 44 for mesh descriptions and colors.*

* *Available Q4 2013*

** *Brushed aluminum trim includes brushed aluminum base caps*

	COMPONENT	CODE	DESCRIPTION
8	**SEAT TEXTILE STYLE**		*See pages 42-45 and textile samples for textile codes*
9	**SEAT TEXTILE COLOR**		*See pages 42-45 and textile samples for color options and codes*
10	**SEAT PAN**	-	Standard Seat Pan
11	**CYLINDER**	-	Standard 5″
		L	Low 3.75″ (Add $26)
		T	Tall 5″ (Add $37)
		F	High 8″ with 18″ Foot Ring (Add $110)*
		R	High 8″ with 21″ Foot Ring (Add $152)*
12	**CASTERS/GLIDES**	-	Standard Casters for Carpeted Floors
		S	Soft Casters
		G	Glides (Add $21)
13	**FIREPROOFING**	-	Standard Foams and Plastics
		C	CAL 133 Approved Foams and Plastics (Add $50)*
14	**SHIPPING**	-	Individually Boxed
		B	Blanket Wrapped †

* Available Q4 2013
† See terms and conditions on page 106

cinto™ Features & Characteristics

Appropriate for a wide range of commercial and residential environments, Cinto sets a new standard for ergonomic stackable seating through unique design and manufacturing innovations. Spanish for "belt," Cinto features a floating backrest that is attached to the chair's frame via a flexible belt, allowing it to move with the body to provide recline and automatic lumbar support. Stress-relief cross-slits on Cinto's seat pan flex independently under the sitting bones to evenly distribute body weight and reduce pressure points, while air vents on the backrest and seat pan enable air circulation for cool seated comfort.

PHYSICAL CHARACTERISTICS

SEAT PAN, BACKREST
- Injection-molded polypropylene

ARM PAD
- Polyethylene

FRAME
- Steel tube

BELT
- Elastomer

STANDARD FEATURES

FLEXIBLE BACKREST
- Attached to the chair's frame via a flexible belt, the floating backrest bends and adjusts with the sitter
- Flexibility of backrest creates virtual pivot point for automatic lumbar support
- No adjustments required

STRESS-RELIEF CROSS-SLITS
- Seat pan cross-slits flex independently under the sitting bones for even weight distribution and reduced pressure points

VENTED SEAT PAN AND BACKREST
- Promotes air circulation and prevents "hot spots"

STACKABILITY
- Freestanding Cintos stack six chairs high
- Up to 15 chairs can be stacked on the optional Cinto Dolly

BACKREST HANDLE
- Provides easy transport

LOW MAINTENANCE
- Washable with soap and water

OPTIONAL FEATURES

ARMREST OPTIONS
- Armless
- Fixed arms

FRAME OPTIONS
- Silver
- Black

BASE OPTIONS
- Sled base
- Four legs on glides
- Four legs on casters

COLOR OPTIONS
- White with Gray Belt
- Black with Black Belt
- Gray with Gray Belt
- Taupe with Gray Belt
- Light Gray with Gray Belt
- Yellow with Gray Belt
- Green with Gray Belt
- Light Blue with Gray Belt
- Blue with Gray Belt
- Red with Gray Belt

FIREPROOFING
- CAL 133-approved

SPECIFICATIONS

SCOPE OF USERS
- Weight capacity: 300 lbs.

WEIGHT
- 12 lbs. Armless chair
- 13 lbs. Fixed-Arm chair

CINTO DOLLY EMPTY
- Height 44″
- Depth 41″
- Width 26″

CINTO DOLLY FULLY STACKED WITH 15 CHAIRS
- Height 67″
- Depth 41″
- Width 26″

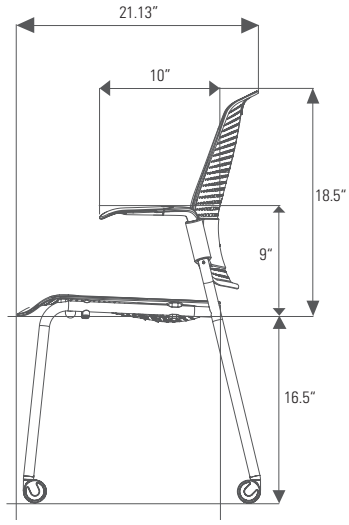

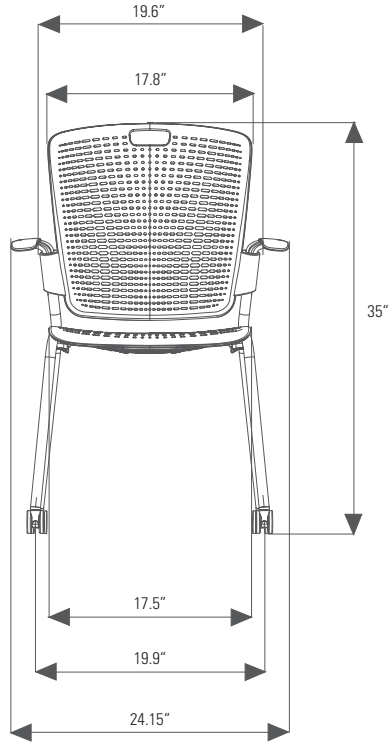

cinto™ Options & Prices

ARMLESS STACKING CHAIR

OPTIONS	CODE	LIST PRICE
Four Legs/Glides	**C10**	$225
Four Legs/Casters	**C20**	$255
Sled Base	**C30**	$265

FIXED-ARM STACKING CHAIR

Four Legs/Glides	**C15**	$275
Four Legs/Casters	**C25**	$305
Sled Base	**C35**	$315

SEAT PAD

Optional Seat Pad	**V** _ _ _	$42

CINTO DOLLY

Cinto Dolly	**CINTODLY**	$240

REPLACEMENT/RETROFIT PARTS

OPTIONS	CODE			LIST PRICE
Seat Pan	**CRS**	11		$52
Seat Pan, CAL 133-Approved	**CRS**	11	**C**	$62
Seat Pad	**CRP**	4555		$42
Casters (Black, Set of 4)	**CRCAST**			$31
Glides (Set of 4)	**CRGLIDE**	2		$11
Arm Sleeves (Pair)	**CRA**	3		$27
Retrofit Armrest Kit (Pair)	**CKA**	23		$80

1- Backrest, Seatpan Color; 2 - Frame Color (S-Silver, B-Black);
3 - Trim Color (G-Gray, B-Black); 4 - Upgrades (Standard Plastics, C-Fireproofing/Cal 133 Approved)

cinto™ Build Your Product Code

Line	Style	Armrests	Frame Color	Backrest, Seat Pan Color	Optional Seat Pad	Fire-proofing
1	2	3	4	5	6	7
—	—	—	—	— —	—	—

COMPONENT	CODE	DESCRIPTION
1 LINE	C	Cinto (Base price $225)
2 STYLE	1	Four Legs, Glides
	2	Four Legs, Casters (Add $30)
	3	Sled Base (Add $40)
3 ARMRESTS	0	Armless
	5	Fixed Arms (Add $50)
4 FRAME COLOR	S	Silver
	B	Black
5 BACKREST, SEAT PAN COLOR	01	White
	10	Black
	15	Gray
	17	Taupe
	18	Light Gray
	33	Yellow
	41	Green
	52	Light Blue
	53	Blue
	72	Red
6 OPTIONAL SEAT PAD	- - - -	No seat pad
	V101	Vellum Black (Add $42)
	V102	Vellum Graphite (Add $42)
	V414	Vellum Greenwood (Add $42)
	V713	Vellum Pomegranate (Add $42)
7 FIREPROOFING	—	Standard Plastics
	C	CAL 133-Approved (Add $21)

Note: Belt is Black on Black chairs, Gray on all other colors.

Textiles

TEXTILE

The cushions on all Humanscale chairs utilize advanced technology developed primarily for the sportswear and sporting goods industries. In a single step, a high-tech molding process combines the textile, foam or Technogel®, and plastic support shell into a single, modular unit which can be attached to our seating with four screws. Because of this advanced process, the textiles used on the cushions are as unique as the rest of the chair, and satisfy requirements more demanding than typical upholstery textiles.

WAVE

Textile Code: W Textile Grade: 1

Developed initially for sportswear, Wave responds to the unique form and production requirements of Humanscale seating. This four-way stretch fabric exceeds all contract interior testing requirements for heavy-duty upholstery. The colors of Wave are taken from the phenomenal hues found in nature.

Colors:

101	Black
102	Graphite
104	Smoke
201	Dark Brown
213	Rattan
402	Loden
415	Sage
502	Blue
507	Navy
601	Ultraviolet
714	Poppy
803	Cayenne

SQUIGGLE

Textile Codes: Textile Grade: 0

Vertical: S

Horizontal: G

Composed of 100% recycled polyester, Squiggle offers an innovative weave structure to create a modern organic wave pattern resembling ripples of water. This environmentally sound textile may be applied either horizontally or vertically to Humanscale seating.

Colors:

106	Ash
208	Chocolate
262	Sand
275	Espresso
448	Herb
501	Indigo
507	Navy
735	Cinnabar
811	Tangerine

SENSUEDE

Textile Code: D Textile Grade: 3

Offering style and performance, Sensuede was developed to be the best and most luxurious engineered suede available. The silky feel is the result of recycled microfibers that are breathable, extra-strong, and resistant to most stains and wrinkles.

Colors:

111	Ebony
115	Pewter
208	Chocolate
305	Goldenrod
406	Olive
411	Pear
413	Arbor
512	Denim
517	Persian
709	Pampas
712	Oxblood

VELLUM

Textile Code: V Textile Grade: 1

Constructed of a simple weave using a blend of nylon, Cordura and elastic yarn, this textile offers a pleasing texture and extreme durability. Because of the Cordura content, this four-way stretch woven textile performs to the rigors of the most demanding environments. The color palette includes brights, classics, and neutrals.

Colors:

101	Black
102	Graphite
106	Ash
114	Light Gray
202	Seal
211	Beech
212	Mahogany
404	Moss
407	Grass
414	Greenwood
507	Navy
607	Periwinkle
713	Pomegranate

SPIRIT MILLENNIUM

Textile Code: U Textile Grade: 1

An antimicrobial and wipeable textile manufactured by Naugahyde, this textile is designed for use in healthcare, education, hospitality, and other environments that require surfaces to be durable and easy to maintain. It passes healthcare testing, such as anti-microbial and cleanability tests, and meets fire code requirements.

Colors:

101	Black
112	Greystone
113	Gunmetal
210	Putty
304	Golden Corn
412	Artichoke
514	Dutch Blue
515	Wedgewood
516	Royal
608	Crocus
711	Raspberry
802	Mandarin Orange

GINKGO

Textile Code: F Textile Grade: 2

Composed of 90% Wool, Ginkgo offers a pleasing texture and durability. Its subtle and elegant pattern makes this textile appropriate for a variety of environments. Ginkgo comes in vibrant and saturated colors, expanding the scope of Humanscale's upholstery line.

Colors:

101	Black
197	Charcoal
281	Walnut
315	Wheat
463	Green
464	Pine
507	Navy
556	Storm
559	October Blue
568	Horizon
734	Cranberry
759	Cherry
816	Harvest Orange

BRIDGET STRIPE

Textile Codes: Textile Grade: 2
Vertical: B
Horizontal: H

Composed primarily of renewable merino wool, Bridget Stripe offers a five-color 50-stripe pattern with shifting color sequence that creates an undisrupted movement across the surface of the fabric. Boasting exceptional durability for a wool textile, Bridget Stripe may be applied either horizontally or vertically to Humanscale seating.

Colors:

104	Smoke
266	Kohl
267	Flax
529	Midnight
560	Lapis
732	Carmine

PROMESSA

Textile Code: E Textile Grade: 3

This Ultraleather textile from Ultrafabrics is environmentally friendly, wipeable and antimicrobial, and ideally suited to healthcare, hospitality and industrial applications. Made without PVC, Promessa has a pebbled, highly textured finish that will work beautifully in a wide variety of environments.

Colors:

111	Ebony
139	Snow
157	Dewdrop
158	Shale
215	Horsehair
219	Fields
222	Pearl
223	Parchment
224	Cashmere
229	Briarwood
245	Bronze
255	Leather
290	Woodpecker
291	Cocoa
292	Tusk
306	Linen
310	Sun Shower
428	Loden
429	Hunter
441	Moss
451	Lily Pad
518	Atlantic
527	Aquamarine
611	Merlot
722	Dogwood

LOTUS

Textile Code: K Textile Grade: 1

Water repellent and easy to clean, Lotus is an ideal textile for the healthcare and hospitality environments. Its polyurethane finish with nylon backing boasts a soft texture that is pleasant to the touch while offering exceptional durability.

Colors:

101	Black
128	White
158	Shale
182	Hematite
2C4	Umber
281	Walnut
302	Ochre
459	Verdant
507	Navy
603	Plum
608	Crocus
623	Lilac
624	Eggplant
756	Ribbon Pink
757	Earth Red
758	Lucky Red

Textiles

SPINNEYBECK LEATHER

VICENZA

Textile Code: Z Leather Grade: 0

A lightly corrected, aniline-dyed leather produced from European hides, Vicenza receives a special retannage which enriches the leather and tightens the grain. A breathable protective finish offers durability and comfort.

Colors:

101	Black
201	Dark Brown
214	Saddle
506	Night Blue

SABRINA

Textile Code: L Leather Grade: 1

Sabrina is one of Spinneybeck's most popular full-grain leathers, offering a smooth, tight grain and suppleness of hand. It is the favorite of those seeking an elegant, fine-grained leather for high-traffic use.

Colors:

101	Black
203	Gray Beige
206	Bone
207	Nutmeg
408	Cat's Eye
508	Marine Blue
509	Water Sapphire
710	Rhubarb

PRIMA

Textile Code: P Leather Grade: 2

Prima signifies the ultimate in full-grain leather. Old world craft combined with premium select raw material create a leather in a class by itself.

Colors:

101	Black
205	Bernini
511	Giotto
609	Bramante
708	Scarlatti

CERVO

Textile Code: R Leather Grade: 3

Cervo is thicker than the other leathers in our collection. Specialized milling adds additional character providing a soft pebble grain texture unmatched by any other leather in its class.

Colors:

1A6	Pietra Lentina
1A7	Sasso Nero
2F0	Mantefalcone
2E8	Aveto
2E9	Metaponto
470	Campigna

ACQUA

Textile Code: Y Leather Grade: 1

Acqua's combination of a special retannage and technically-advanced finishing process results in a leather that is not only water-resistant but also practical for applications that require a durable finish.

Colors:

1C0	Leviathan
1C1	Black Sea
1A9	Aquitania
2F1	Tahiti
2F2	Mississippi Delta
2F3	Sea Wolf
471	Flying Dutchman
573	Cote d' Azur
763	Yardarm

TEXTILE PURCHASE PROGRAM

All Humanscale textiles (with the exception of Leather, Sensuede, Promessa and Spirit Millennium) are available for purchase by the linear yard. The prices below are net (standard discounts do not apply). A $20 cut charge will apply to each order. Please see your Humanscale representative for more information.

Wave	$35/yd (61" width)	Squiggle	$25/yd (54" width)
Monofilament Stripe	$60/yd (50" width)	Bridget Stripe	$55/yd (55" width)
Vellum	$45/yd (50" width)	Lotus	$36/yd (54" width)
Silver Check	$70/yd (53" width)	Ginkgo	$75/yd (51" width)
Torque	$70/yd (57" width)		

MESH

These translucent textiles were created to provide optimal ergonomic support and comfort by melding strength, flexibility and resiliency. They surpass the performance criteria for contract seating textiles and meet a variety of environmental standards in both the United States and Europe, while remaining gentle on clothing.

MONOFILAMENT STRIPE

Mesh Code: M

Using only monofilament yarns that are thin and strong, a simple but classic stripe pattern is achieved through weave structure and yarn placement. This pattern has slight elasticity but terrific memory.

Colors:

10	Black
11	Carbon
14	Platinum
41	Green
51	Atlantic
81	Amber

TORQUE

Mesh Code: T

This proven weave construction gives the look of a solid yet translucent textile. Originally developed as a protective layer for motorcycle riders, Torque is woven with nylon, polyester and urethane yarns. It is both unique and durable.

Colors:

10	Black
13	Aluminum
31	Soleil
61	Lagoon

SILVER CHECK

Mesh Code: C

This unique translucent pattern is achieved using monofilament and a silver-plated yarn spun with polyester at its core. More than simply an aesthetic choice, the silver-plated yarn gives the textile flexibility and strength.

Colors:

12	Alloy
32	Topaz
62	Sapphire
71	Ruby

DASH

Mesh Code: A

Designed to resemble embroidery floss, Dash is stronger, more responsive, lighter weight and uses less material than most mesh textiles. It gives the user support, comfort and ease of movement, while meeting Humanscale's seating requirements.

Colors:

14	Platinum
19	Zinc

CUSTOM COLORS

Textiles – Most Humanscale textiles are available in any customer-specified color. Delivery time frames for custom color orders will depend on color approval. A surcharge of $200 will apply to custom color orders of 100 or more chairs, and a surcharge of $350 will apply to custom color orders of less than 100 chairs. The following minimums are required for custom textile colors.

Vellum:	50-chair minimum (Freedom) 100-chair minimum (Liberty & Diffrient World)
Wave:	175-chair minimum (Freedom) 350-chair minimum (Liberty & Diffrient World)
Torque:	110-chair minimum
Lotus:	200-chair minimum (Freedom) 400-chair minimum (Liberty & Diffrient World)
Ginkgo:	240-chair minimum (Freedom) 480-chair minimum (Liberty & Diffrient World)

Non-Stocked Colors – Vicenza, Sabrina and Prima leathers, Sensuede, Spirit Millennium, and Promessa can be ordered in any color standard to these textile lines, even if it isn't stocked by Humanscale. Ordering any non-stocked color may impact the lead time for delivery. The list price upcharge for these non-stocked colors is as follows:

Sensuede, Spirit Millennium, Promessa:
$30 per chair (Freedom), $20 per chair (Liberty & Diffrient World)

Vicenza, Sabrina, Prima, Acqua, Cervo: No upcharge

Civilization advances by the number of important operations which we can perform without thinking about them.

—Alfred North Whitehead

Lighting

Build Your Element Light Product Code

Element Light

To create the product code for your Element Light, simply choose your preferred style, plug, mount and color, and combine the respective codes for each.

Element Light Product Code:

Style	Plug	Mount	Color
1	2	3	4
____	____	____	____

1 Style

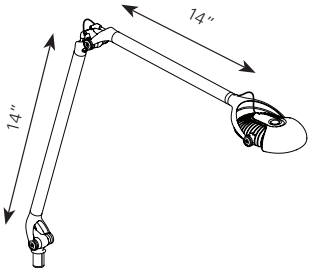

EL $405
Element Classic: 5-Watt MCX LED Light

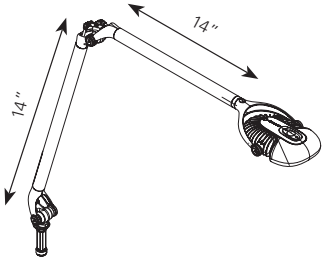

ED $449
Element 790: 5-Watt Hi-Output MCX LED with Dimmer

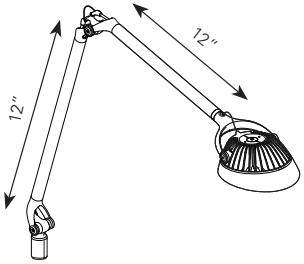

EV $499
Element Vision: 7-Watt Hi-Output MCX LED with Dimmer and Occupancy Sensor

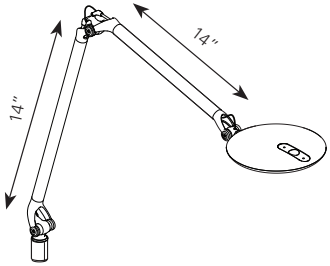

EC $499
Element Disc: 7-Watt Hi-Output MCX LED with Dimmer and Occupancy Sensor

2 Plug

E N/C
North America

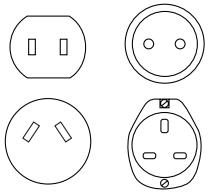

U Add $4
Universal
(4 interchangeable plugs)

3 Mount

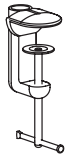

C N/C
Clamp
For grommet or edge mount. Fits surfaces up to 2" thick and grommet holes 2" or more in diameter.

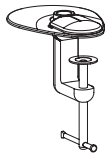

G Add $10
Clamp with Grommet Cover
For grommet holes 2" – 3.25" in diameter.

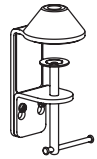

K Add $15
2-Piece Clamp
Requires minimum 1/4" clearance between desk and wall or panel.

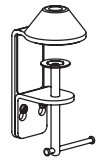

T Add $35
2-Piece Clamp with Theft Deterrent
Requires minimum 1/4" clearance between desk and wall or panel. By Special Order.

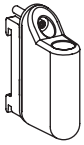

Panel Mount Add $25
PC Allsteel Concensys
P2 Allsteel Terrace 2.6 & 3.4, Align
PH Haworth Places, Unigroup
PM Haworth Premise
PA Herman Miller Action Office
PR Herman Miller Resolve
P9 Steelcase 9000
PB Teknion Boulevard
PI Teknion IE
PL Teknion Leverage, Transit
Not compatible with corner mount applications. For other panel systems, see your Humanscale representative.

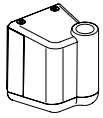

U Add $25
Universal Panel Mount
Adjusts to fit most panels that use vertical slotted rails for mounting accessories. Not compatible with corner applications.

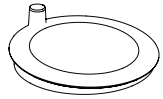

B Add $50
Element Desktop Base
8" diameter

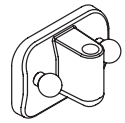

S N/C
Universal Slatwall
Adjusts to fit most standard slatwalls.

W N/C
Wall
Screws into vertical surface.

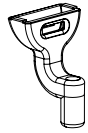

A N/C
Humanscale Access Rail

NM N/C
No Mount

D N/C
Direct
Screws into horizontal surface.

R Add $25
Direct with Theft Deterrent
Screws into horizontal surface. By Special Order.

Note: All Silver lights ship with Silver mounts.
All Black lights ship with Black mounts.
All White lights ship with Silver mounts, except Desktop Base (B), Two-Piece Clamp (K), Two-Piece Clamp with Theft Deterrent (T), Direct (D), and Direct with Theft Deterrent (R), which ship White.

4 Color

S	W	B
Silver	**White**	**Black** *ONLY available with ED & EV styles*

Element Light Replacement Parts
(if purchased separately)

ELEMENT LIGHT MOUNTS		
Element Desktop Base	**ELBS** (silver), **ELBW** (white) **ELBB** (black)	$85
Access Rail	**DLAS** (silver), **DLAB** (black)	$35
Clamp *For grommet or edge mount*	**DLCS** (silver), **DLCB** (black)	$35
2-Piece Clamp *For edge mount*	**DLKS** (silver), **ELKW** (white) **DLKB** (black)	$50
2-Piece Clamp with Theft Deterrent	**ELTS** (silver), **ELTB** (black) **ELTW** (white)	$75
Direct	**DLDS** (silver), **ELDW** (white) **DLDB** (black)	$35
Direct with Theft Deterrent	**ELRS** (silver), **ELRB** (black) **ELRW** (white)	$60
Universal Slatwall	**DLSS** (silver)	$35
Wall	**DLWS** (silver)	$35
Universal Panel Mount	**DLUS** (silver), **DLUB** (black) **ELUW** (white)	$60
Panel Mount	**DL** 1 1 2 (1): Panel System Code, (2): Color (B or S)	$60
Grommet Cover *For use with Clamp Mount C*	**DLGC** (black)	$10
North American Plug Set	**ELPLUGE**	$35
Universal Plug Set	**ELPLUGU**	$50

Build Your Horizon Product Code

Horizon Light

To create the product code for your Horizon Light, simply choose your preferred style, plug, mount and color, and combine the respective codes for each.

Horizon Light Product Code:

Style	Plug	Color
1	2	3
_____	_____	_____

1 Style

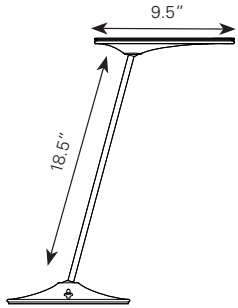

HNB $475
Horizon Light: 9-Watt Thin Wave LED with Dimmer, Base Style

2 Plug

E N/C
North America

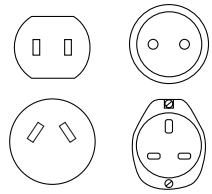

U Add $4
Universal
(4 interchangeable plugs)

3 Color

B
Black, Glossy

S
Silver

W
White, Glossy

Technology can make simple things complicated or complicated things simple – we prefer the latter.

Build Your Artemide Tolomeo Light Product Code

Tolomeo Light

To create the product code for your Tolomeo Light, simply choose your preferred style, mount, color, and lamp and combine the respective codes for each.

Special dealer discounting for Tolomeo product line. Consult your Humanscale rep.

Tolomeo Light Product Code:

Style	Mount	Color	Lamp
1	2	3	4
____	____	____	____

1 Style

TOLOMEO LED LIGHT (TL SERIES)

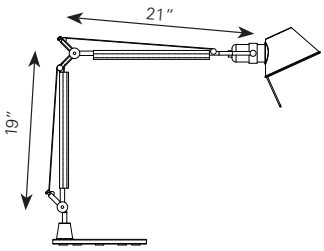

TLC $435
10-Watt Tolomeo Classic LED Light

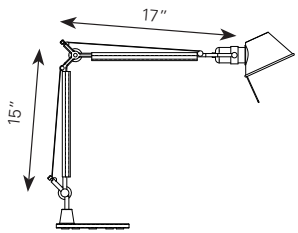

TLM $415
10-Watt Tolomeo Mini LED Light

TOLOMEO CFL LIGHT (TT SERIES)

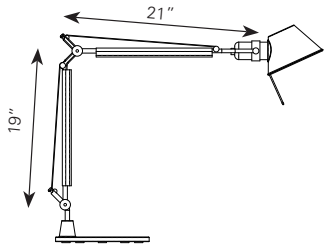

TTC $300
Tolomeo Classic CFL Light

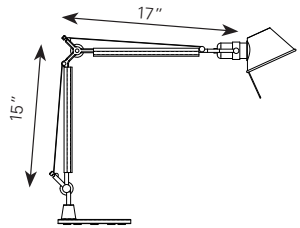

TTM $285
Tolomeo Mini CFL Light

2 Mount

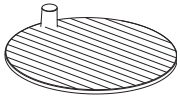

B Add $160
Desktop Base for Classic
9″ diameter

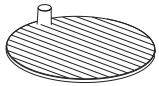

B Add $150
Desktop Base for Mini
8″ diameter

C Add $55
Clamp

V Add $40
In-Set Pivot
For mounting into horizontal surfaces. Requires a hole 0.65″ in diameter

2 Mount, cont.

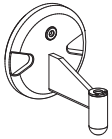

W	Add $55	**N**	N/C
Wall Surface		**No Mount**	

3 Color

S
Silver

4 Lamp

TOLOMEO 10-WATT LED LIGHT INCLUDED (TL SERIES)

–	Standard LED	N/C

TOLOMEO CFL LIGHT (TT SERIES)

1	18W, 3500K (standard)	Add $5
2	23W, 3500K	Add $5
3	13W, 3500K	Add $5
4	9W, 3500K	Add $5
6	18W, 2700K	Add $5
7	18W, 5500K, Full Spectrum	Add $20
0	No Bulb	N/C

Tolomeo Light Replacement Parts

(if purchased separately)

TOLOMEO LIGHT MOUNTS (TL & TT SERIES)

Desktop Base for Classic, 9"	**TABCS** (silver)	$220
Desktop Base for Mini, 8"	**TABMS** (silver)	$210
Clamp	**TACS** (silver)	$115
In-Set Pivot	**TAVS** (silver)	$100
Wall	**TAWS** (silver)	$115

TOLOMEO CFL LIGHT ACCESSORIES (TT SERIES)

Lamp *18W, 3500K*	**DLCFL1**	$8
Lamp *23W, 3500K*	**DLCFL2**	$8
Lamp *13W, 3500K*	**DLCFL3**	$8
Lamp *9W, 3500K*	**DLCFL4**	$8
Lamp *18W, 2700K*	**DLCFL6**	$8
Lamp *18W, 5500K, Full spectrum*	**DLCFL7**	$30

Build Your Diffrient Light Product Code

Diffrient Task Light II and Work Light II

To create the product code for your Diffrient Light, simply choose your preferred style, mount, color and lamp, and combine the respective codes for each.

Diffrient Task Light II and Work Light II Product Code:

Style	Mount	Color	Lamp
1	2	3	4
____	____	____	____

1 Style

DIFFRIENT TASK LIGHT II (DA SERIES)

Compatible with GU24 2-pin compact fluorescent bulbs.

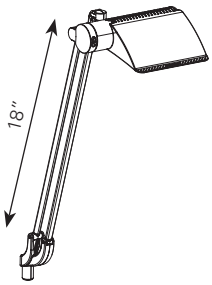

DA1E $290
Single Arm with Task Shade

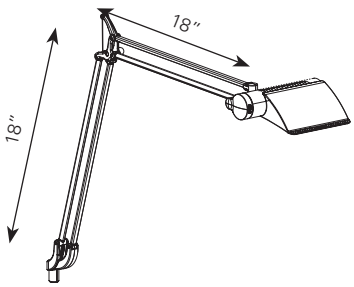

DA2E $322
Double Arm with Task Shade

DIFFRIENT WORK LIGHT II (DX SERIES)

E26 socket compatible with screw-in bulbs up to 60W.

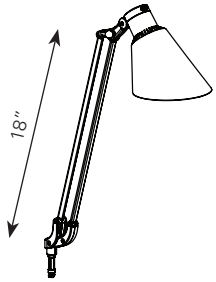

DX1E $290
Single Arm with Work Shade
DX1M *(for Mexico)*

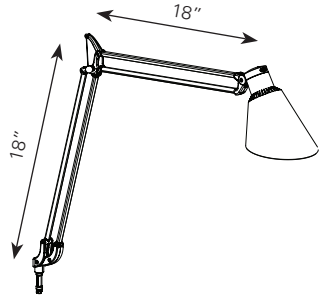

DX2E $322
Double Arm with Work Shade
DX2M *(for Mexico)*

2 Mount

B Add $90
Diffrient Desktop Base
9″ diameter

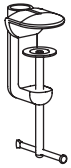

C N/C
Clamp
For grommet or edge mount. Fits surfaces up to 2″ thick and grommet holes 2″ or more in diameter.

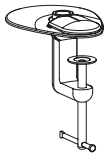

G Add $10
Clamp with Grommet Cover
For grommet holes 2″ – 3.25″ in diameter.

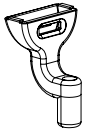

A N/C
Humanscale Access Rail

2 Mount, cont.

Panel Mount Add $25

PC Allsteel Concensys
P2 Allsteel Terrace 2.6 & 3.4, Align
PH Haworth Places, Unigroup
PM Haworth Premise
PA Herman Miller Action Office
PR Herman Miller Resolve
P9 Steelcase 9000
PB Teknion Boulevard
PI Teknion IE
PL Teknion Leverage, Transit

Not compatible with corner mount applications. For other panel systems, see your Humanscale representative.

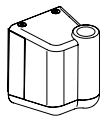

U Add $25

Universal Panel Mount

Adjusts to fit most panels that use vertical slotted rails for mounting accessories. Not compatible with corner applications.

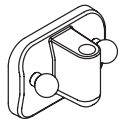

S N/C

Universal Slatwall

Adjusts to fit most standard slatwalls.

W N/C

Wall

Screws into vertical surface.

D N/C

Direct

Screws into horizontal surface.

R Add $25

Direct with Theft Deterrent

Screws into horizontal surface.
By Special Order.

NM N/C

No Mount

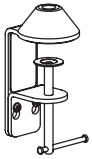

K Add $15

2-Piece Clamp

Requires minumium 1/4" clearance between desk and wall or panel.

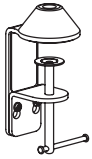

T Add $35

2-Piece Clamp with Theft Deterrent

Requires minumium 1/4" clearance between desk and wall or panel.
By Special Order.

3 Color

S
Silver

B
Black

4 Lamp

DIFFRIENT TASK II LIGHT (DA SERIES)

A	18W, 3500K, GU24 base (standard)	N/C
C	13W, 3500K	N/C
D	9W, 3500K	N/C
E	18W, 2700K	N/C

DIFFRIENT WORK LIGHT II (DX SERIES)

1	18W, 3500K, E26 socket (standard)	N/C
2	23W, 3500K	N/C
3	13W, 3500K	N/C
4	9W, 3500K	N/C
6	18W, 2700K	N/C
7	18W, 5500K, Full Spectrum	Add $20
0	No Bulb	Less $5

Build Your Diffrient Technology Light Product Code

Diffrient Technology Light

To create the product code for your Diffrient Light, simply choose your preferred style, base features, color, lamp, and accessories and combine the respective codes for each.

Diffrient Technology Light Product Code:

Style	Mount	Color	Lamp	Accessories
1	2	3	4	5
____	____	____	____	____

1 Style

DIFFRIENT TECHNOLOGY LIGHT (DTECH SERIES)

E26 socket compatible with screw-in bulbs up to 60W

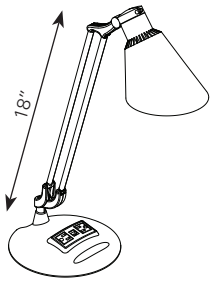

DTECH1E $429
Single Arm with Work Shade

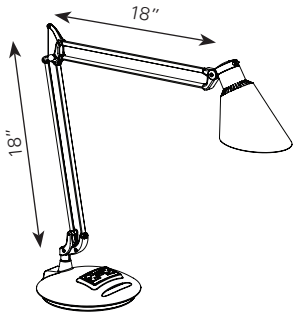

DTECH2E $459
Double Arm with Work Shade

DIFFRIENT TECHNOLOGY LIGHT (DTECHT SERIES)

By special order, consult your Humanscale rep.
Compatible with GU24 2-pin compact fluorescent bulbs.

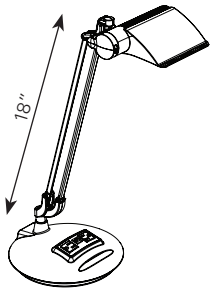

DTECHT1E $429
Single Arm with Task Shade

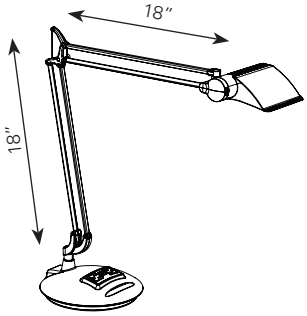

DTECHT2E $459
Double Arm with Task Shade

2 Base Features

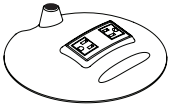

P N/C
2 Outlets

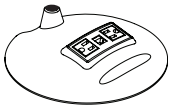

T Add $20
2 Outlets with CAT5/6 Data Port

3 Color

S
Silver

B
Black

4 Lamp

DIFFRIENT TECHNOLOGY LIGHT (DTECH SERIES)

1	18W, 3500K, E26 socket (standard)	N/C
2	23W, 3500K	N/C
3	13W, 3500K	N/C
4	9W, 3500K	N/C
6	18W, 2700K	N/C
7	18W, 5500K, Full Spectrum	Add $20
0	No Bulb	Less $5

DIFFRIENT TECHNOLOGY LIGHT (DTECHT SERIES)

A	18W, 3500K, GU24 base (standard)	N/C
C	13W, 3500K	N/C
D	9W, 3500K	N/C
E	18W, 2700K	N/C

5 Accessories

For Base "T" ONLY

—	No accessories	N/C
C3	3' CAT5 User Internet Cord (red)	Add $5
C10	10' CAT5 Supply Internet Cord (black)	Add $10
CB	Both 3' User Internet Cord and 10' Supply Internet Cord	Add $15

Diffrient Light Replacement Parts

(if purchased separately)

TASK and Work LIGHT Accessories (DT & DW Series)

Electronic Ballast	**DLBALE** (gray)	$126
Magnetic Ballast	**DLBALM** (black) *No longer available*	
Lamp *26W, 3500K, 4-Pin Base*	**DLBULB**	$22

Diffrient Light Replacement Parts, cont.

(if purchased separately)

TASK LIGHT II AND WORK LIGHT II MOUNTS (DA & DX SERIES)

Diffrient Desktop Base	**DLBS** (silver), **DLBB** (black)	$125
Access Rail	**DLAS** (silver), **DLAB** (black)	$35
Clamp *For grommet or edge mount*	**DLCS** (silver), **DLCB** (black)	$35
2-Piece Clamp *For edge mount*	**DLKS** (silver), **DLKB** (black)	$50
2-Piece Clamp with Theft Deterrent	**ELTS** (silver), **ELTB** (black)	$75
Direct	**DLDS** (silver), **DLDB** (black)	$35
Direct with Theft Deterrent	**ELRS** (silver), **ELRB** (black)	$60
Universal Slatwall	**DLSS** (silver), **DLSB** (black)	$35
Wall	**DLWS** (silver), **DLWB** (black)	$35
Universal Panel Mount	**DLUS** (silver), **DLUB** (black)	$60
Panel Mount	**DL** 1 1 2 (1): Panel System Code, (2): Color (B or S)	$60
Grommet Cover *For use with Clamp Mount C*	**DLGC** (black)	$10

WORK LIGHT II AND TECHNOLOGY LIGHT ACCESSORIES (DX & DTECH SERIES)

Lamp *18W, 3500K, screw-in base*	**DLCFL1**	$8
Lamp *23W, 3500K, screw-in base*	**DLCFL2**	$8
Lamp *13W, 3500K, screw-in base*	**DLCFL3**	$8
Lamp *9W, 3500K, screw-in base*	**DLCFL4**	$8
Lamp *18W, 2700K, screw-in base*	**DLCFL6**	$8
Lamp *18W, 5500K, Full spectrum*	**DLCFL7**	$30

TASK LIGHT II AND TECHNOLOGY LIGHT ACCESSORIES (DA SERIES & DTECHT SERIES)

Lamp *18W, 3500K, GU24 base*	**DLSLIMA**	$8
Lamp *13W, 3500K, GU24 base*	**DLSLIMC**	$8
Lamp *9W, 3500K, GU24 base*	**DLSLIMD**	$8
Lamp *18W, 2700K, GU24 base*	**DLSLIME**	$8

TECHNOLOGY LIGHT ACCESSORIES (DTECH & DTECHT SERIES)

3' CAT5 User Internet Cord	**CAT5CORD3**	$5
10' CAT5 Supply Internet Cord	**CAT5CORD10**	$10

Lighting Accessories

Occupancy Sensor Power Strip

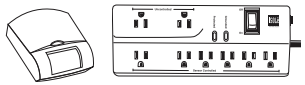

OCCSTRIP $240

8-outlet power strip with energy-saving personal occupancy sensor

Benefits of Energy-Efficient Task Lighting

Improve Comfort

Different tasks and different users can require significantly different levels of light, and therefore can't be accommodated by single-source overhead lighting schemes.

Task lighting is essential for ergonomic comfort by supplying the right amount of adjustable illumination for each user and task while reducing eyestrain, headaches, monitor glare, and other symptoms caused by poor office lighting.

Save Energy

When task lights are implemented at each workstation in an office, ambient lighting levels can be reduced. And when lower levels of overhead lighting are combined with energy-efficient task lights, the cost-savings can be significant.

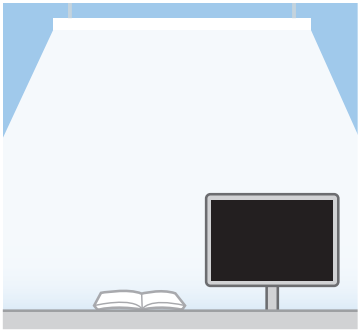

SINGLE Source
Bright Ambient Lighting

DUAL Source
Low Ambient Lighting
with Task Lighting

Float Table

Build Your Float Table

To determine the list price for your Float Table, identify your choice for each component and build the product code as shown below. Add the prices for all the options selected.

PRODUCT	BASE COLOR	COUNTERBALANCE ADJUSTER	WIDTH	DEPTH	TOP SIZE LAMINATE	TOP FINISH	TOP EDGE
1	2	3	4	5	6	7	8
___ ___	___	___	___	___	___ ___ ___ ___	___ ___	___

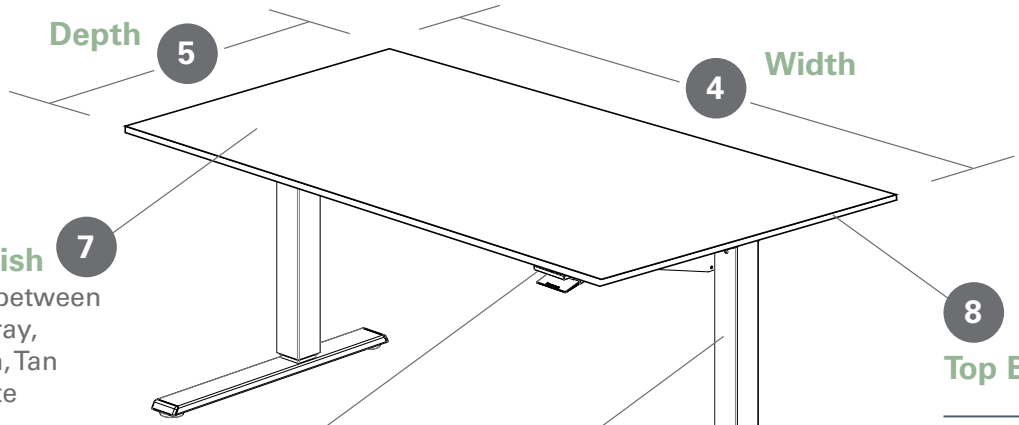

Float Component Pricing

COMPONENT	CODE	DESCRIPTION	LIST PRICE
1 PRODUCT	FN	Float Base Only (No Top)	$ -
	FT	Float with Top	-
2 BASE COLOR	B	Black	0
	S	Silver	0
	W	White	0
3 COUNTERBALANCE ADJUSTER	M	Mounted	100
	R	Removable	-
4 WIDTH	4	For 48 inch - 54 inch wide tops	1,799
	6	For 60 inch - 72 inch wide tops	1,849
5 DEPTH	2	For 24 inch deep tops	-
	3	For 30 inch deep tops	-
6 TOP SIZE LAMINATE	2448	24 inch deep by 48 inch wide top	395
	2454	24 inch deep by 54 inch wide top	425
	2460	24 inch deep by 60 inch wide top	450
	2466	24 inch deep by 66 inch wide top	480
	2472	24 inch deep by 72 inch wide top	510
	3048	30 inch deep by 48 inch wide top	425
	3054	30 inch deep by 54 inch wide top	450
	3060	30 inch deep by 60 inch wide top	475
	3066	30 inch deep by 66 inch wide top	495
	3072	30 inch deep by 72 inch wide top	535
	XXXX	No Table Top	-
7 TOP FINISH	BL	Black	0
	GY	Gray	0
	PL	Platinum	0
	TN	Tan	0
	WH	White	0
	XX	No Table Top	-
8 TOP EDGE	F	Flat	0
	K	Knife	0
	X	No Table Top	-

Note: For Float with no table top, select all X's for positions 6 - 8.

zōN Air Purifier

ZŌN Personal Air Purifier

Pricing Chart

Code	Description	Price
Standard Configuration		
Includes 1 Particulate and 2 VOC filters (6-month supply)		
HZABBS	Black ZŌN Personal Air Purifier, Base Mount	$399
HZABRS	Red (Metallic) ZŌN Personal Air Purifier, Base Mount	$399
HZABWS	White ZŌN Personal Air Purifier, Base Mount	$399
Multipack Value Configuration		
Includes 2 Particulate and 4 VOC filters (12-month supply)		
HZABBM	Black ZŌN Personal Air Purifier, Base Mount	$474
HZABRM	Red (Metallic) ZŌN Personal Air Purifier, Base Mount	$474
HZABWM	White ZŌN Personal Air Purifier, Base Mount	$474

Replacement Filters

(if purchased separately)

Code	Description	Price
HZP1	Particulate Filter	$60
HZV2	Double Pack VOC Filters	$45
HZPAK	Value Pack (2 Particulate, 4 VOC) 12-month supply	$150

Accessories

Code	Description	Price
HZCORDNA	ZŌN Power Supply, North America Cord	$15
HZPREFILTER	ZŌN Personal Prefilter	$10

ZŌN Efficacy

Boasting breeze-free and ozone-free operation, the ZŌN Personal Air Purifier silently and unobtrusively filters out more than 99% of airborne contaminants of all sizes—including dust, smoke, germs, allergens, smog, viruses, and even volatile organic compounds like formaldehyde—for the freshest air possible.

Monitor Arms

M/Flex Common Configurations

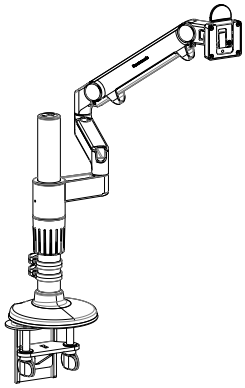

MF2AX* *$405*

12″ Post, Clamp Mount, Adjustable Bracket for One Monitor, (1) #2 Style Arm (Straight/Dynamic)

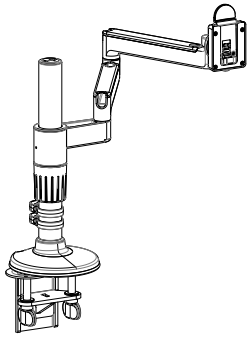

MF2BX* *$315*

12″ Post, Clamp Mount, Adjustable Bracket for One Monitor, (1) #3 Style Arm (Straight/Straight)

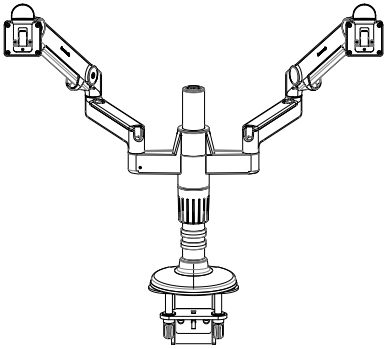

MF2CX* *$680*

12″ Post, Clamp Mount, (2) Adjustable Brackets for Two Monitors (2) #2 Style Arms (Straight/Dynamic)

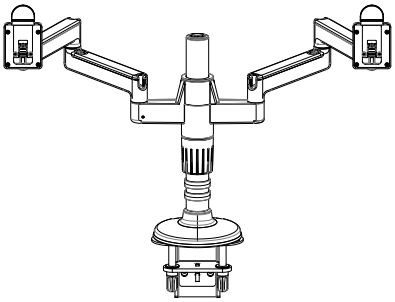

MF2DX* *$500*

12″ Post, Clamp Mount, (2) Adjustable Brackets for Two Monitors (2) #3 Style Arms (Straight/Straight)

*X Denotes color. Replace with S for silver/gray trim, W for polished aluminum/white trim or B for black/black trim

M/Flex Common Configurations (continued)

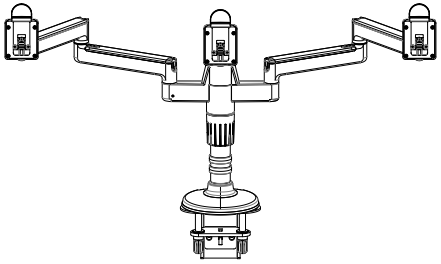

MF2EX* *$590*

12″ Post, Clamp Mount, (3) Adjustable Brackets for Three Monitors (2) #3 Style Arms (Straight/Straight) and Ball Joint Turret

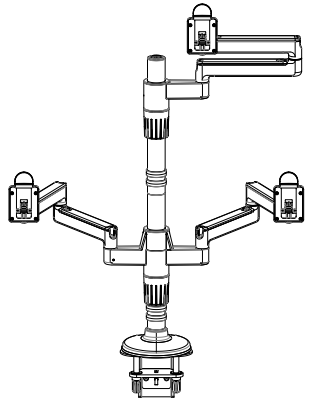

MF2FX* *$725*

24″ Post, Clamp Mount, 2-Row High Adjustable Brackets for 1 Over 2 Configuration, (3) #3 Style Arms (Straight/Straight)

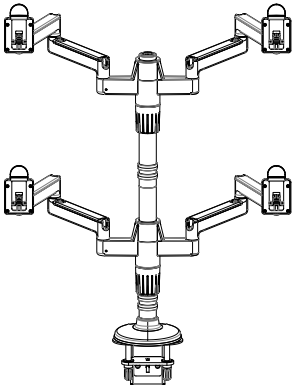

MF2GX* *$910*

24″ Post, Clamp Mount, 2-Row High Adjustable Brackets for 2 Over 2 Configuration, (4) #3 Style Arms (Straight/Straight)

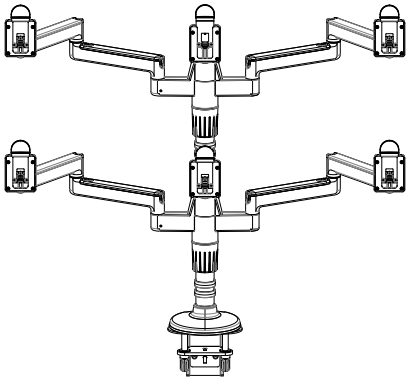

MF2HX* *$1090*

24″ Post, Clamp Mount, 2-Row High Adjustable Brackets for 3 Over 3 Configuration, (4) #3 Style Arms (Straight/Straight), 2 Ball Joint Turrets

*X Denotes color. Replace with S for silver/gray trim, W for polished aluminum/white trim or B for black/black trim

Build Your M/Flex Product Code

To determine the list price for your monitor arm solution, identify your choice for each component and build the product code as shown below. Add the prices for all the options selected.

PRODUCT "MF2" OR "MF8"	BRACKET STYLE	COLOR	ARM STYLE *(4b and 4c, if applicable)*	MOUNT	POST HEIGHT	VESA PLATE	INDIVIDUAL PACKAGING
1	2	3	4 4b 4c	5	6	7	8
___ ___ ___	___	___	___ ___ ___	___	___ ___	___	___

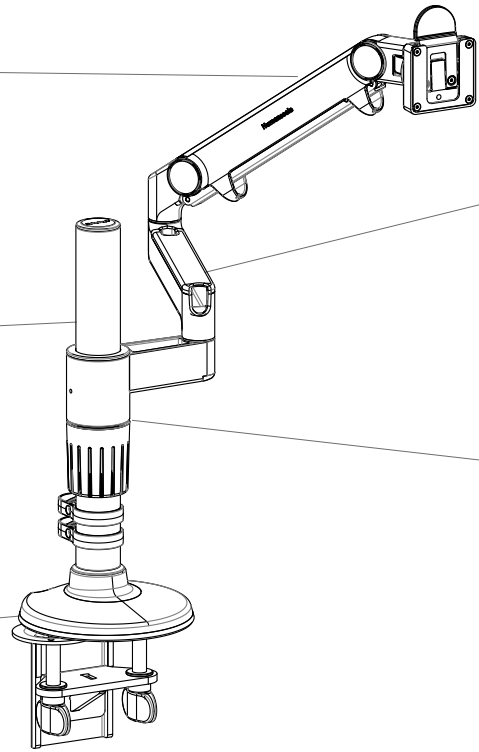

4

ARM STYLE
There are a total of 7 different Arm Styles to choose from. (See Specification for details.) The number of arms must equal the bracket number.

6

POST HEIGHT
Posts come in 12″ or 18″ high stackable sections. Specify the desired Post height, which will be a combination of 12″ and 18″ Posts. 24 – 36″ high posts will ship with the attachment bolt. Specify N for No Mount.

5

MOUNT STYLE
Choose the desired Mount based on your mounting surface.

3

COLOR
Choose S for Silver with gray plastic trim, B for all Black and W for polished aluminum with white plastic trim. Note that M/Flex colors are exactly the same as M2 and M8 colors.

2

BRACKET STYLE
Choose 1, 2 or 3 brackets. The number of brackets must equal the number of monitors being mounted. Note that each bracket is separate: 1 is the Base Bracket for 1 monitor, 2 is the Base Bracket AND the 2nd monitor bracket, and 3 provides the Base Bracket, the 2nd Monitor Bracket and the 3rd Monitor Bracket.

*For M2/M8 Accessories please refer to page 65 in the price guide.

M/Flex Component Pricing Chart

COMPONENT	CODE	DESCRIPTION	LIST PRICE M2	LIST PRICE M8
1 PRODUCT GROUP	**MF2**	M/Flex for M2 Arms		
	MF8	M/Flex for M8 Arms		
2 BRACKET	**1**	Base Bracket for 1 Monitor	$50	$70
Specify # of Brackets	**2**	Brackets for 2 Monitors	100	140
Equals # of Monitors	**3**	Brackets for 3 Monitors	140	N/A
3 COLOR	**S**	Silver with Gray Trim	0	0
	B	Black with Black Trim	0	0
	W	Polished Aluminum with White Trim	0	0
4 ARM CONFIGURATION	**0**	Ball Joint Turret	50	55
# of Arms must equal	**1**	Fixed Angled Link/Dynamic Link	225	380
the # of Brackets	**2**	Straight Link/Dynamic Link	225	380
For multiple, specify	**3**	Straight Link/Straight Link	135	190
from left to right	**4**	Fixed Angled Link/Straight Link	145	220
	5	Single Dynamic Link Only	180	240
	6	Single Straight Link Only	70	135
	7	Single Fixed Angled Link Only	70	135
	X	No Arm	0	0
5 MOUNT	**C**	Clamp Mount	90	90
	B	Bolt-Thru Mount	50	50
	S	Universal Slatwall Mount	N/A	N/A
	H	Hardwall Mount	N/A	N/A
	P	c:scape Mount	100	110
	N	No Mount	0	0
	D	Dual Mount - Clamp + Bolt-Through Mount	115	115
6 POST HEIGHT	**12**	12" High Post	40	40
	18	18" High Post	70	70
	24	24" High Post (Two 12" High Stackable Posts)	80	80
	30	30" High Post (12" and 18" High Stackable Posts)	110	110
	36	36" High Post (Two 18" High Stackable Posts)	140	140
	N	No Post	0	0
7 VESA PLATE	**-**	Standard 100mm x 100mm (also used for 75mm x 75mm)	0	0
	1	100mm x 200mm	21	21
	2	200mm x 200mm	32	32
	3	200mm x 400mm	52	52
	N	Notebook Holder	140	140
8 INDIVIDUAL PACKAGING	**-**	Standard bulk packaging for orders of 3 or more	0	0
	IND	Individual pacakging for all units in an order	11**	11**

* When specifying 2-row high posts, the upper arm must be configured as a separate line item; should have no mount and no post. Example: MF22S33NN, M/Flex for M2, 2 Brackets, silver, Straight/Straight on left, Straight/Straight on right, No Mount, No Post.
** List price per unit

M/Flex Add-On Component Pricing Chart

	COMPONENT	CODE	DESCRIPTION	LIST PRICE M2	LIST PRICE M8
1	**PRODUCT GROUP**	AD2	M/Flex Add-Ons for M2 Arms		
		AD8	M/Flex Add-Ons for M8 Arms		
2	**BRACKET**	2	Bracket for 2nd Monitor	$50	$70
		3	Bracket for 3rd Monitor	40	N/A
3	**COLOR**	S	Silver with Gray Trim	0	0
		B	Black with Black Trim	0	0
		W	Polished Aluminum with WhiteTrim	0	0
4	**ARM CONFIGURATION** *# of Arms must equal the # of Brackets* *For multiple arms, specify from left to right*	0	Ball Joint Turret	50	55
		1	Fixed Angled Link/Dynamic Link	225	380
		2	Straight Link/Dynamic Link	225	380
		3	Straight Link/Straight Link	135	190
		4	Fixed Angled Link/Straight Link	145	220
		5	Single Dynamic Link Only	180	240
		6	Single Straight Link Only	70	135
		7	Single Fixed Angled Link Only	70	135
5	**MOUNT**	N	No Mount	0	0
6	**POST HEIGHT**	N	No Post	0	0

*When adding a 2nd monitor to a single Base Bracket or 3rd monitor to 2 brackets, use prefix AD2 and specify each bracket/arm style separately.

M2/ M8 Common Configurations

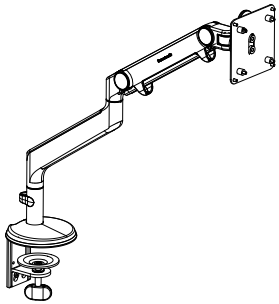

M2CX* *$310*

M2 with Clamp Mount

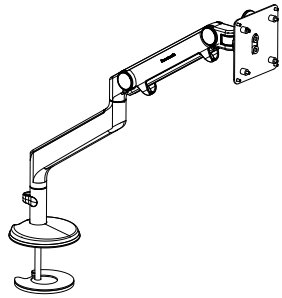

M2BX* *$310*

M2 with Bolt-Through Mount

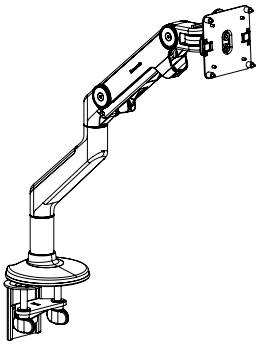

M8CX* *$485*

M8 with Clamp Mount

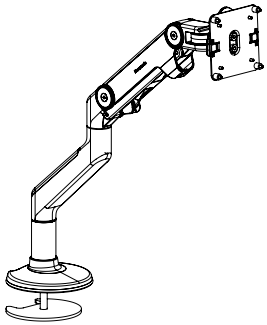

M8BX* *$485*

M8 with Bolt-Through Mount

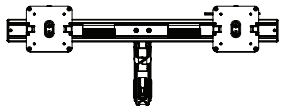

M8CX-C* *$620*

M8 with Clamp Mount and Crossbar

M8BX-C* *$620*

M8 with Bolt-Through Mount and Crossbar

*X denotes color. Substitute S for Silver with Gray trim, W for Polished Aluminum with White trim or B for all Black

Build Your M2/M8 Product Code

To determine the list price for your monitor arm solution, identify your choice for each component and build the product code as shown below. Add the prices for all the options selected.

PRODUCT GROUP	MOUNT	COLOR	ARM STYLE	END STYLE	VESA PLATE	INDIVIDUAL PACKAGING
1	2	3	4	5	6	7
___ ___	____	____	____	____	____	____

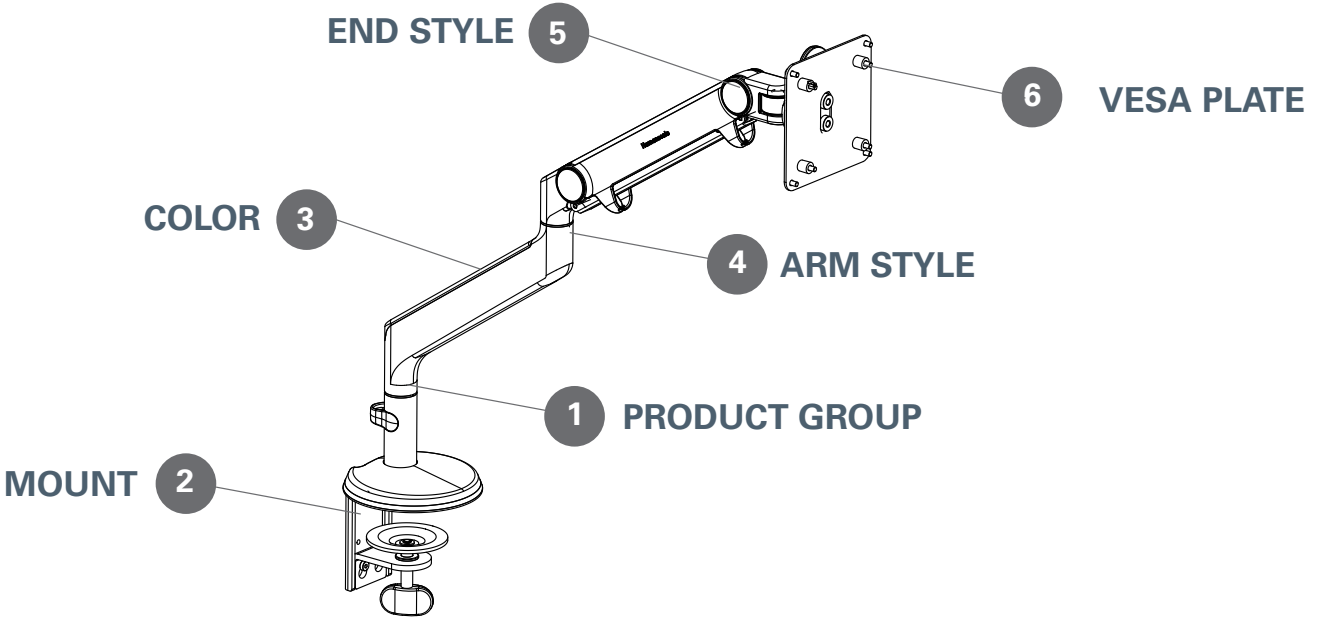

M2/M8 Component Pricing Chart

COMPONENT	CODE	DESCRIPTION	LIST PRICE M2	LIST PRICE M8
1 **PRODUCT GROUP**	M2	M2 Monitor Arm[1]		
	M8	M8 Monitor Arm[2]		
2 **MOUNT** *Note: M2 and M8 mounts are not interchangeable*	N	No Mount	$0	$0
	C	Two-Piece Clamp Mount with Base	85	105
	B	Bolt-Through Mount with Base	85	105
	S	Universal Slatwall Mount	85	105
	H	Direct Hardwall Mount	85	105
	D	Dual Mount – Clamp & Bolt-Through Mount	110	130
3 **COLOR**	S	Silver with Gray Trim	0	0
	W	Polished Aluminum with White Trim	0	0
	B	Black with Black Trim	0	0
4 **ARM STYLE**	0	Ball Joint Only	–	55
	1	Fixed Angled Link/Dynamic Link	225	380
	2	Fixed Straight Link/Dynamic Link	225	380
	3	Fixed Straight Link/Fixed Straight Link	135	190
	4	Fixed Angled Link/Fixed Straight Link	–	220
	5	Dynamic Link Only	–	240
	6	Straight Link Only	–	135
	7	Fixed Angle Link Only	–	135
5 **END STYLE**	S	Standard Ball Joint only	0	0
	C	Crossbar for 2 monitors	–	135
	H	Crossbar for 2 monitors, with handle[3]	–	215
6 **VESA PLATE**	–	Standard 100mm x 100mm (also used for 75mm x 75mm)	0	0
	1	100mm x 200mm	21	21*
	2	200mm x 200mm	32	32*
	3	200mm x 400mm	52	52*
	N	Notebook Holder	140	140
7 **INDIVIDUAL PACKAGING**	–	Standard bulk packaging for orders of 3 or more units	0	0
	IND	Individual Packaging for all units in an order	11**	11**

1 Supports one monitor up to 20 lbs.
2 Supports one or two monitors up to a total of 42 lbs.
3 M8 handle available Q4 2011. Only available with crossbar.
* If ordered with Crossbar, multiply price by two as two VESA Plates will ship with order
** List price per unit

M2/M8 Accessories Pricing Chart

COMPONENT	CODE	DESCRIPTION	LIST PRICE
Front-End Adjuster	UFEA-S-M8	Universal Front-End Adjuster for M2 and M8 - Silver	$130
Mounts[1]	M2CM-X	M2 Clamp Mount with Base	85
	M8CM-X	M8 Clamp Mount with Base	105
	M2BT-X	M2 Bolt-Through Mount with Base	85
	M8BT-X	M8 Bolt-Through Mount with Base	105
	M2SM-X	M2 Universal Slatwall Mount	85
	M8SM-X	M8 Universal Slatwall Mount	105
	M2HW-X	M2 Direct Hardwall Mount	85
	M8HW-X	M8 Direct Hardwall Mount	105
M8 Conversion Kits[1]	M8CB-X	Crossbar Conversion Kit, converts single M8 to M8 with Crossbar	210
	M8BJ-X	Ball Joint Conversion Kit, coverts M8 with Crossbar to single M8	65
M8 Handle	M8HA-X	M8 Handle	80
VESA Plates	M2DVP	Drop-Down VESA Plate for M2 or M8	21
For M2 and M8	VM28-11	Standard 100mm x 100mm (also used for 75mm x 75mm), with hardware	21
	VM28-12	100mm x 200mm, with hardware	32
	VM28-22	200mm x 200mm, with hardware	42
	VM28-24	200mm x 400mm, with hardware	62
Notebook Holder	M2NH	Notebook Holder in bracket for M2 and M8	140

[1]X denotes color. Substitute S for Silver with Gray trim, W for Polished Aluminum with White trim or B for all Black

M7 / M4 Common Configurations

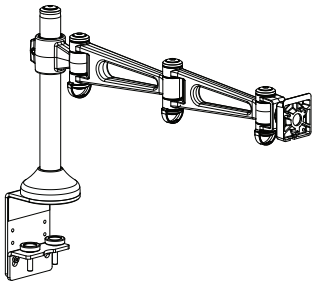

M7C $365
M7S-C *Silver*
M7B-C *Black*

B1 Bracket-Mounted Arm, Two M7 Standard 8" Links, Two-Piece Low-Profile Clamp Mount with Slim Post. Accommodates one monitor up to 30 pounds.

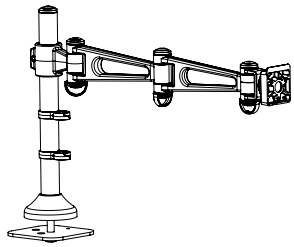

M7L $340
M7S-L *Silver*
M7B-L *Black*

B1 Bracket-Mounted Arm, Two M7 Standard 8" Links, Bolt-Through Mount with Slim Post. Accommodates one monitor up to 30 pounds.

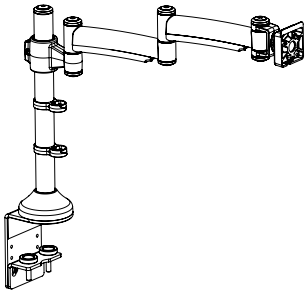

M7M $375
M7S-M *Silver*
M7B-M *Black*

B1 Bracket-Mounted Arm, Two M7 8" Folding Links, Two-Piece Low-Profile Clamp Mount with Slim Post. Accommodates one monitor up to 30 pounds

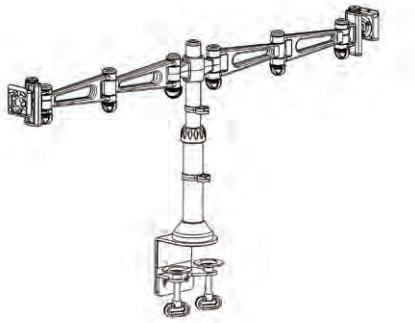

M7R $585
M7S-R *Silver*
M7B-R *Black*

B2 Bracket-Mounted Arms, Two M7 Standard 8" Links for each arm, Two-Piece Heavy Duty Clamp Mount, Non-Adjustable Standard Post. Accommodates two monitors up to 30 pounds each.

M7/M4 Common Configurations (continued)

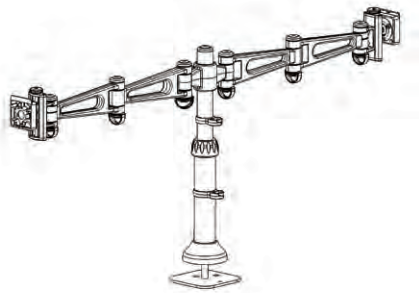

M7S $530
M7S-S *Silver*
M7B-S *Black*

B2 Bracket-Mounted Arms, Two M7 Standard 8" Links for each arm, Bolt-Through Mount with Non-Adjustable Standard Post. Accommodates two monitors up to 30 pounds each.

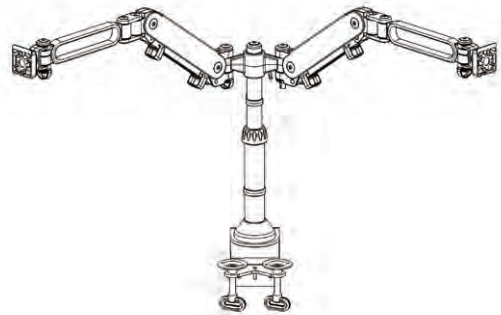

M4T $945
M4S-T *Silver*
M4B-T *Black*

B2 Bracket Mounted Arms, Two M4 Adjustable Double-Link Arms, Two-Piece Heavy-Duty Clamp Mount with Non-Adjustable Standard Post. Accommodates two monitors, 5 – 20 pounds each.

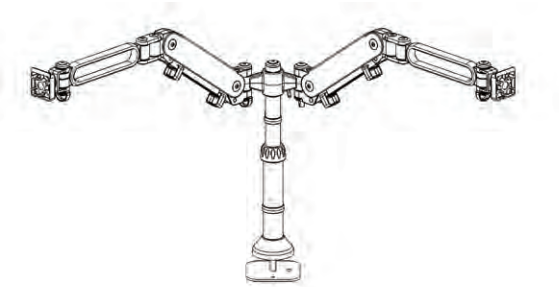

M4U $890
M4S-U *Silver*
M4B-U *Black*

B2 Bracket-Mounted Arms, Two M4 Adjustable Double-Link Arms, Bolt-Through Mount with Non-Adjustable Standard Post. Accommodates two monitors, 5 – 20 pounds each.

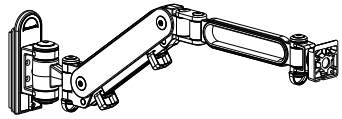

M4V $490
M4S-V-PP* *Silver*
M4B-V-PP* *Black*

N1 No-Post Arm Bracket, M4 Adjustable Double-Link Arm, Panel Mount. Accommodates one monitor, 5 – 20 pounds.

*Replace "PP" with model-specific systems furniture panel mount; see page 71.

M7/M4 Common Configurations (continued)

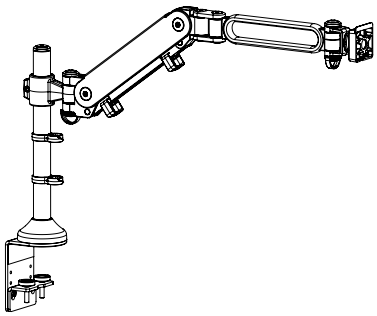

M4W $545
M4S-W *Silver*
M4B-W *Black*

B1 Bracket-Mounted Arm, M4 Adjustable Double-Link Arm, Two-Piece Low-Profile Clamp Mount with Slim Post. Accommodates one monitor, 5 – 20 pounds.

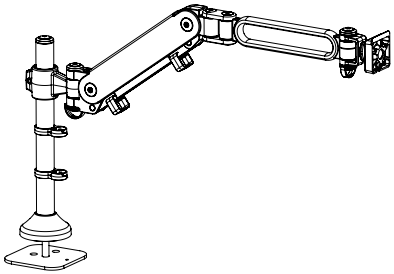

M4X $520
M4S-X *Silver*
M4B-X *Black*

B1 Bracket-Mounted Arm, M4 Adjustable Double-Link Arm, Bolt-Through Mount with Slim Post. Accommodates one monitor, 5 – 20 pounds.

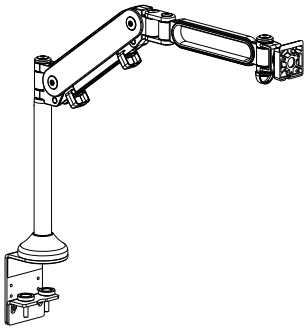

M4Y $525
M4S-Y *Silver*
M4B-Y *Black*

Top-Mounted Arm Bracket, M4 Adjustable Double-Link Arm, Two-Piece Low-Profile Clamp Mount with Slim Post. Accommodates one monitor, 5 – 20 pounds.

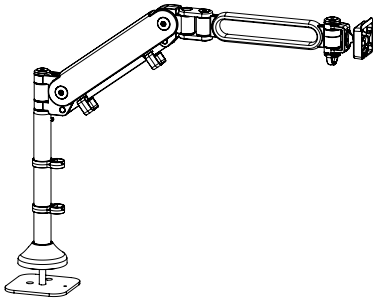

M4Z $500
M4S-Z *Silver*
M4B-Z *Black*

Top-Mounted Arm Bracket, M4 Adjustable Double-Link Arm, Bolt-Through Mount with Slim Post. Accommodates one monitor, 5 – 20 pounds.

Build Your M7/M4 Product Code

To determine the list price for your monitor arm solution, identify your choice for each component and build the product code as shown below. Add the prices for all the options selected.

PRODUCT	BRACKET STYLE	COLOR	ARM STYLE *(3b and 3c, if applicable)*			MOUNT	POST STYLE	ADD-ONS *(if applicable)*
"M7" or "M4"	1	2	3	3b	3c	4	5	6
__ __	__ __	__	__	__	__	__ __	__ __	__ __

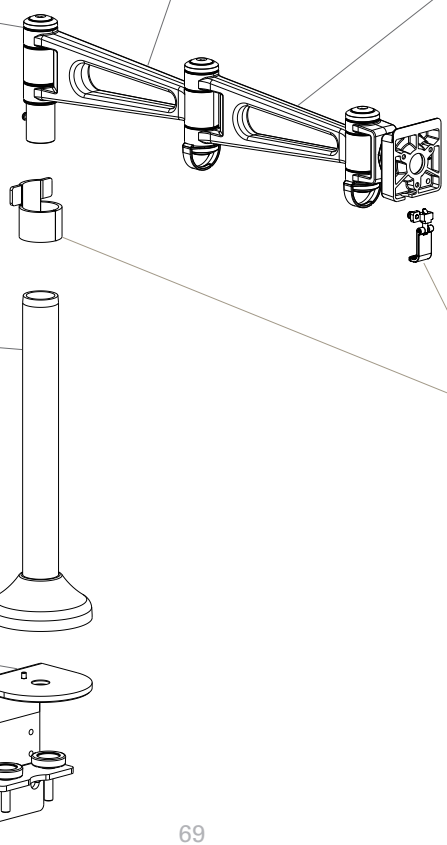

1

BRACKET STYLE
Choose the appropriate Bracket based on number of monitors and Bracket Style. There are two characters in the product code for Bracket Style.

5

POST STYLE
Choose the desired Post, if applicable. There are two characters in the product code for Posts.

4

MOUNT STYLE
Choose the desired Mount based on your mounting surface. There are two characters in the product code for Mounts.

3

ARM STYLE
Choose the desired arm style (M7 shown). There is one character in the product code for Arm Style. To order a monitor arm for one monitor, only one character (component #3) is required. To order an arm for two monitors (as with N2 or B2 Brackets), use #3 and #3b to specify the left Arm Style, then the right Arm Style (in that order). To order an arm for three monitors (B3 Brackets), use #3 and #3b and #3c to specify the left Arm Style, the middle Arm Style, and the right Arm Style (in that order).

6

ADD-ONS
Enhance the function of your monitor arm with optional Add-Ons. Simply include the applicable codes for the desired Add-On. For example, for the Quick Release Add-On only, add a QR to the end of the product code. For a Quick Release and a Post Stop, the product code would end in QRPS.

ACCESSORIES
Monitor Arm Accessories are ordered separately from the monitor arm itself. Product codes for Accessories, detailed on page 76, are not included in your monitor arm product code.

M7 Component Pricing Chart

COMPONENT	CODE	DESCRIPTION	NO POST BRACKETS		TOP-MOUNT BRACKET		POST WITH BRACKET MOUNT		
1 BRACKET STYLE			1 Monitor	2 Monitors	1 Monitor	2 Monitors	1 Monitor	2 Monitors	3 Monitors
						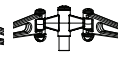		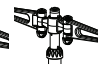	
			N1	**N2**	**T1**	**T2**	**B1**	**B2**	**B3**
		Base Price:	$ 60	$ 70	$ 40	$ 70	$ 60	$ 70	$ 80
2 COLOR	**B**	Black	0	0	0	0	0	0	0
	S	Silver	0	0	0	0	0	0	0
	A	Polished Aluminum[1]	0	0	0	0	0	0	0
3 ARM STYLE	**0**	Ball Joint Only	55	55	55	55	55	55	55
	1	One Standard 8″ Link	120	120	120	120	120	120	120
	2	Two Standard 8″ Links	160	160	160	160	160	160	160
	3	One Standard 12″ Long Link	140	140	140	140	140	140	140
	4	Two Standard 12″ Long Links	185	185	185	185	185	185	185
	5	One 12″ Long Link/One 8″ Standard Link	175	175	175	175	175	175	175
	8	One 8″ Folding Link	125	125	125	125	125	125	125
	9	Two 8″ Folding Links	170	170	170	170	170	170	170
3b ARM STYLE *If necessary. Use with N2, B2 or B3 only.*	**0**	Ball Joint Only	–	55	–	55	–	55	55
	1	One Standard 8″ Link	–	120	–	120	–	120	120
	2	Two Standard 8″ Links	–	160	–	160	–	160	160
	3	One Standard 12″ Long Link	–	140	–	140	–	140	140
	4	Two Standard 12″ Long Links	–	185	–	185	–	185	185
	5	One 12″ Long Link/One 8″ Standard Link	–	175	–	175	–	175	175
	8	One 8″ Folding Link	–	125	–	125	–	125	125
	9	Two 8″ Folding Links	–	170	–	170	–	170	170
3c ARM STYLE *If necessary. Use with B3 only.*	**0**	Ball Joint Only	–	–	–	–	–	–	–
	1	One Standard 8″ Link	–	–	–	–	–	–	120
	2	Two Standard 8″ Links	–	–	–	–	–	–	160
	3	One Standard 12″ Long Link	–	–	–	–	–	–	140
	4	Two Standard 12″ Long Links	–	–	–	–	–	–	185
	5	One 12″ Long Link/One 8″ Standard Link	–	–	–	–	–	–	175
	8	One 8″ Folding Link	–	–	–	–	–	–	125
	9	Two 8″ Folding Links	–	–	–	–	–	–	170
4 MOUNT STYLE[2]	**NM**	No Mount, except as noted with Stackable Posts below	–	–	0	0	0	0	0
	XV	No Mount, with Stackable Post for Vertical Surface	–	–	0	0	0	0	0
	XH	No Mount, with Stackable Post for Horizontal Surface	–	–	0	0	0	0	0
Horizontal Surfaces	**BT**	Bolt-Through Mount	–	–	45	45	45	45	45
	CM	Two-Piece Heavy-Duty Clamp Mount	–	–	100	100	100	100	100
	LC	Two-Piece Low Profile Clamp Mount	–	–	70	70	70	70	70
	DM	Direct Mount	–	–	45	45	45	45	45

M7 Component Pricing Chart (Continued)

COMPONENT	CODE	DESCRIPTION	NO POST BRACKETS		TOP-MOUNT BRACKET		POST WITH BRACKET MOUNT		
			1 Monitor	2 Monitors	1 Monitor	2 Monitors	1 Monitor	2 Monitors	3 Monitors
Wall Stud	**WD**	Standard Wall Stud Mount, Supports Multiple Monitors	$85	$ 85	$ 85	$ 85	$ 85	$ 85	$ 85
	WU	Universal Wall Stud Mount, Single Monitors Only	85	–	–	–	–	–	–
	WK	Knuckle Wall Stud Mount	45	–	–	–	–	–	–
Standard Slatwall[3]	**SD**	Dates Weiser Slatwall	85	85	85	85	85	85	85
	SW	EDP Contour Slatwall	85	85	85	85	85	85	85
	SS	EDP Slatwall	85	85	85	85	85	85	85
	SR	Eurocraft Slatwall	85	85	85	85	85	85	85
	SN	Evans Consoles	85	85	85	85	85	85	85
	SW	Forecast Slatwall	85	85	85	85	85	85	85
	SE	Herman Miller Slatwall	85	85	85	85	85	85	85
	SU	Humanscale Access Rail	85	85	85	85	85	85	85
	SI	Innovant (CBA) Slatwall	85	85	85	85	85	85	85
	SU	Kimball Slatwall	85	85	85	85	85	85	85
	SX	LaCour Extrusion (Beam)	85	85	85	85	85	85	85
	SC	LaCour Standard Slatwall	85	85	85	85	85	85	85
	SL	Novalink Slatwall	85	85	85	85	85	85	85
	SS	SBFI Universal Slatwall	85	85	85	85	85	85	85
	SN	SBFI/Triax Slatwall	85	85	85	85	85	85	85
	SB	TBC Slatwall	85	85	85	85	85	85	85
	SB	Wall Street Trading	85	85	85	85	85	85	85
	SP	Perma Groove Slatwall	85	85	85	85	85	85	85
	SN	Wilson Slatwall	85	85	85	85	85	85	85
	SW	Woodtronics Slatwall	85	85	85	85	85	85	85
Universal Slatwall[3]	**S2**	Universal Slatwall, Supports Single Monitors Only: Dates Weiser, Eurocraft, Forecast, Haworth, Innovant (CBA), Knoll Currents, Knoll Extra, LaCour, SBFI/Triax, Steelcase Details,TBC, Teknion Leverage, Teknion Transit, Woodtronics, Wright Line	80	–	80	–	80	–	–
	S4	Universal Slatwall, Supports Single Monitors Only: Humanscale Access Rail, Kimball, Evans Console	80	–	80	–	80	–	–
	W1	Universal Slatwall w/Post	–	–	–	–	65	65	65
	FM	Universal Slatwall w/No Post	45	–	–	–	–	–	–
Panel Mounts	**PC**	Allsteel Concensys	90	90	90	90	90	90	90
	P2	Allsteel Terrace 2.6, 3.4	90	90	90	90	90	90	90
	PH	Haworth Places	90	90	90	90	90	90	90
	PM	Haworth Premise	90	90	90	90	90	90	90
	PH	Haworth Unigroup	90	90	90	90	90	90	90
	PA	Herman Miller Action Office	90	90	90	90	90	90	90
	PE	Herman Miller Ethospace	90	90	90	90	90	90	90
	PR	Herman Miller Resolve	90	90	90	90	90	90	90
	P9	Steelcase 9000	90	90	90	90	90	90	90
	PI	Teknion ie	90	90	90	90	90	90	90
	PL	Teknion Leverage	90	90	90	90	90	90	90
	PB	Teknion Boulevard	90	90	90	90	90	90	90

M7 Component Pricing Chart (Continued)

				NO POST BRACKETS		TOP-MOUNT BRACKET		POST WITH BRACKET MOUNT		
				1 Monitor	2 Monitors	1 Monitor	2 Monitors	1 Monitor	2 Monitors	3 Monitors
5	POST STYLE	NP	No Post	$ 0	$ 0	$ 0	$ 0	$ 0	$ 0	$ 0
		1V	One-Row Stackable Post for Vertical Surfaces[4]	–	–	–	–	65	65	65
		2V	Two-Row Stackable Post for Vertical Surfaces	–	–	–	–	120	120	120
		TV	Top Row Stackable Post for Vertical Surfaces	–	–	–	–	55	55	55
		1H	One-Row Stackable Post for Horizontal Surfaces	–	–	–	–	115	115	115
		2H	Two-Row Stackable Post for Horizontal Surfaces	–	–	–	–	175	175	175
		TH	Top Row Stackable Post for Horizontal Surfaces	–	–	–	–	55	55	55
		SL	Slim (non-adjustable)[4]	–	–	75	75	75	75	–
		SP	Standard Post, Non-Adjustable	–	–	95	95	95	95	95
ADD-ONS										
6a	QUICK RELEASE	–	Standard, No Quick Release	0	0	0	0	0	0	0
		QR	Quick Release	21	42	21	42	21	42	63
6b	POST STOP	–	Standard, No Post Stop	0	0	0	0	0	0	0
		PS	Post Stop (180˚)	–	–	21	63	32	63	–
6c	CROSSBAR	–	Standard, No Crossbar	0	0	0	0	0	0	0
		C2	Crossbar For 2 Monitors[5]	–	230	–	230	–	230	–
		C3	Crossbar For 3 Monitors[5]	–	305	–	305	–	305	–
6d	NOTEBOOK HOLDER	–	Standard, No Notebook Holder	0	0	0	0	0	0	0
		NH	Notebook Holder[6]	120	120	120	120	120	120	120
6e	KEYBOARD HOLDER	–	No Keyboard Holder	0	0	0	0	0	0	0
		KS	Keyboard Holder, Standard[7]	290	–	–	–	290	–	–
		KW	Keyboard Holder, Wide[8]	295	–	–	–	295	–	–
6f	PHONE MOUNT	–	No Phone Mount	0	0	0	0	0	0	0
		PM	Phone Mount[9]	27	27	27	27	27	27	27

1 Polished Aluminum requires 8–10 weeks for delivery after receipt of order.
2 Choose one mount from Horizontal Surfaces, Wall Stud Mounts, Slatwall Mounts (Standard or Universal) or Panel Mounts.
3 Standard Slatwall accommodates multiple monitors or a post. Universal Slatwall is for single monitors only.
4 Slim Posts only available for use with single arms or double arms with maximum monitor weight of 30 pounds.
5 Crossbar only available with a T2 and B2 Bracket and two M7 8" Folding Link Arms (Arm Style 9) or two M4 Adjustable Double Link Arms (Arm Style A).
6 When ordering Notebook Holder with two-monitor configurations, a single Notebook Holder will be placed on the right arm.
7 Standard Keyboard Holder consists of 19" board with 8" round mousing surface and gel palm support for both; Humanscale #90011RG.
8 Wide Keyboard Holder consists of 25" keyboard/mousing board with gel palm support.
9 One Phone Mount provided. With double or triple arms the phone mount can be placed on any arm.

M4 Component Pricing Chart

COMPONENT	CODE	DESCRIPTION	NO POST BRACKETS		TOP-MOUNT BRACKET		POST WITH BRACKET MOUNT	
1 BRACKET STYLE			1 Monitor	2 Monitors	1 Monitor	2 Monitors	1 Monitor	2 Monitors
				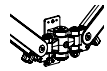		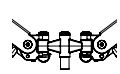		
			N1	N2	T1	T2	B1	B2
		Base Price:	$ 60	$ 70	$ 40	$ 70	$ 60	$ 70
2 COLOR	B	Black	0	0	0	0	0	0
	S	Silver	0	0	0	0	0	0
3 ARM STYLE	A	Adjustable Double-Link Arm	340	340	340	340	340	340
	B	Adjustable Single-Link Arm	290	290	290	290	290	290
	D	Dampened Double-Link Arm	375	375	375	375	375	375
	E	Dampened Single-Link Arm	320	320	320	320	320	320
3b ARM STYLE *(If applicable)*	A	Adjustable Double-Link Arm	–	340	–	340	–	340
	B	Adjustable Single-Link Arm	–	290	–	290	–	290
	D	Dampened Double-Link Arm	–	375	–	375	–	375
	E	Dampened Single-Link Arm	–	320	–	320	–	320
4 MOUNT STYLE[2] *Horizontal Surfaces*	NM	No Mount	–	–	0	0	0	0
	BT	Bolt-Through Mount	–	–	45	45	45	45
	CM	Two-Piece Heavy-Duty Clamp Mount	–	–	100	100	100	100
	LC	Two-Piece Low Profile Clamp Mount	–	–	70	70	70	70
	DM	Direct Mount	–	–	45	45	45	45
Wall Stud	WD	Standard Wall Stud Mount, Supports Multiple Monitors	85	85	85	85	85	85
	WU	Universal Wall Stud Mount, Single Monitors Only	85	–	–	–	–	–
	WK	Knuckle Wall Stud Mount	45	–	–	–	–	–
Standard Slatwall[3]	SD	Dates Weiser Slatwall	85	85	85	85	85	85
	SW	EDP Contour Slatwall	85	85	85	85	85	85
	SS	EDP Slatwall	85	85	85	85	85	85
	SR	Eurocraft Slatwall	85	85	85	85	85	85
	SN	Evans Consoles	85	85	85	85	85	85
	SW	Forecast Slatwall	85	85	85	85	85	85
	SE	Herman Miller Slatwall	85	85	85	85	85	85
	SU	Humanscale Access Rail	85	85	85	85	85	85
	SI	Innovant (CBA) Slatwall	85	85	85	85	85	85
	SU	Kimball Slatwall	85	85	85	85	85	85
	SX	LaCour Extrusion (Beam)	85	85	85	85	85	85
	SC	LaCour Standard Slatwall	85	85	85	85	85	85
	SL	Novalink Slatwall	85	85	85	85	85	85
	SS	SBFI Universal Slatwall	85	85	85	85	85	85
	SN	SBFI/Triax Slatwall	85	85	85	85	85	85
	SB	TBC Slatwall	85	85	85	85	85	85
	SB	Wall Street Trading	85	85	85	85	85	85
	SP	Perma Groove Slatwall	85	85	85	85	85	85

M4 Component Pricing Chart (Continued)

COMPONENT	CODE	DESCRIPTION	NO POST BRACKETS		TOP-MOUNT BRACKET		POST WITH BRACKET MOUNT	
			1 Monitor	2 Monitors	1 Monitor	2 Monitors	1 Monitor	2 Monitors
	SN	Wilson Slatwall	$85	$ 85	$ 85	$ 85	$ 85	$ 85
	SW	Woodtronics Slatwall	85	–	85	85	85	–
Universal Slatwall[3]	S2	Universal Slatwall, Supports Single Monitors Only: Dates Weiser, Eurocraft, Forecast, Haworth, Innovant (CBA), Knoll Currents, Knoll Extra, LaCour, SBFI/Triax, Steelcase Details,TBC, Teknion Leverage, Teknion Transit, Woodtronics, Wright Line	80	–	80	–	80	–
	S4	Universal Slatwall, Supports Single Monitors Only: Humanscale Access Rail, Kimball, Evans Console	80	–	80	–	80	–
	W1	Universal Slatwall w/Post	–	–	–	–	65	65
	FM	Universal Slatwall w/No Post	45	–	–	–	–	–
Panel Mounts	PC	Allsteel Concensys	90	90	90	90	90	90
	P2	Allsteel Terrace 2.6, 3.4	90	90	90	90	90	90
	PH	Haworth Places	90	90	90	90	90	90
	PM	Haworth Premise	90	90	90	90	90	90
	PH	Haworth Unigroup	90	90	90	90	90	90
	PA	Herman Miller Action Office	90	90	90	90	90	90
	PE	Herman Miller Ethospace	90	90	90	90	90	90
	PR	Herman Miller Resolve	90	90	90	90	90	90
	P9	Steelcase 9000	90	90	90	90	90	90
	PI	Teknion ie	90	90	90	90	90	90
	PL	Teknion Leverage	90	90	90	90	90	90
	PB	Teknion Boulevard	90	90	90	90	90	90
5 **POST STYLE**	NP	No Post	0	0	0	0	0	0
	1V	One-Row Stackable Post for Vertical Surfaces[4]	–	–	–	–	65	65
	2V	Two-Row Stackable Post for Vertical Surfaces	–	–	–	–	120	120
	TV	Top Row Stackable Post for Vertical Surfaces	–	–	–	–	55	55
	1H	One-Row Stackable Post for Horizontal Surfaces	–	–	–	–	115	115
	2H	Two-Row Stackable Post for Horizontal Surfaces	–	–	–	–	175	175
	TH	Top Row Stackable Post for Horizontal Surfaces	–	–	–	–	55	55
	SL	Slim (non-adjustable)[4]	–	–	75	75	75	75
	SP	Standard Post, Non-Adjustable	–	–	95	95	95	95

M4 Component Pricing Chart (Continued)

COMPONENT	CODE	DESCRIPTION	NO POST BRACKETS		TOP-MOUNT BRACKET		POST WITH BRACKET MOUNT	
			1 Monitor	2 Monitors	1 Monitor	2 Monitors	1 Monitor	2 Monitors
ADD-ONS								
6a **QUICK RELEASE**	–	Standard, No Quick Release	$ 0	$ 0	$ 0	$ 0	$ 0	$ 0
	QR	Quick Release	21	42	21	42	21	42
6b **POST STOP**	–	Standard, No Post Stop	0	0	0	0	0	0
	PS	Post Stop (180˚)	–	–	21	63	32	63
6c **CROSSBAR**	–	Standard, no Crossbar	0	0	0	0	0	0
	C2	Crossbar for 2 Monitors[5]	–	230	–	230	–	230
	C3	Crossbar for 3 Monitors[5]	–	305	–	305	–	305
6d **NOTEBOOK HOLDER**	–	Standard, No Notebook Holder	0	0	0	0	0	0
	NH	Notebook Holder[6]	120	120	120	120	120	120
6e **KEYBOARD HOLDER**	–	No Keyboard Holder	0	0	0	0	0	0
	KS	Keyboard Holder, Standard[7]	290	–	290	–	290	–
	KW	Keyboard Holder, Wide[8]	295	–	295	–	295	–
6f **PHONE MOUNT**	–	No Phone Mount	0	0	0	0	0	0
	PM	Phone Mount[9]	27	27	27	27	27	27

1 Polished Aluminum not available with M4 Adjustable Monitor Arms.
2 Choose one mount from Horizontal Surfaces, Wall Stud Mounts, Slatwall Mounts (Standard or Universal) or Panel Mounts.
3 Standard Slatwall accommodates multiple monitors or a post, Universal Slatwall is for single monitors only.
4 Slim Posts only available for use with single arms or double arms with maximum monitor weight of 30 pounds.
5 Crossbar only available with a T2 or B2 Bracket and two M7 8" Folding Link Arms (Arm Style 9) or two M4 Adjustable Double Link Arms (Arm Style A).
6 When ordering Notebook Holder with two-monitor configurations, a single Notebook Holder will be placed on the right arm.
7 Standard Keyboard Holder consists of 19" board with 8" round mousing surface and gel palm support for both. Humanscale #90011RG. Available with D and E arms only.
8 Wide Keyboard Holder consists of 25" keyboard/mousing board with gel palm support. Available with D and E arms only.
9 One Phone Mount provided. With double arms the phone mount can be placed on either arm.

M7 and M4 Accessories

MODEL #	DESCRIPTION	LIST PRICE
UFEA-S	Universal Front-End Adjuster for M7, Silver only (supports up to 30 lbs.)	$130
VBK	VESA Bracket Kit for M7 and M4 (Contains 75mm, 100mm Plates and Hardware)	21
SCK	Security Kit for M7 and M4 (Kensington Only, No Security Bolts Available)	45
DVP	Drop Down VESA Plate for M7 and M4	45
PST-B	180˚ Arm Stop, Top Mount, Black	21
PST-S	180˚ Arm Stop, Top Mount, Silver	21
PBS-B	180˚ Post Stop, Bracket Mount, Standard 8" Link, Black	32
PBL-B	180˚ Post Stop, Bracket Mount, Long 12" Link, Black	32
PBF-B	180˚ Post Stop, Bracket Mount, Folding Link, Black	32
M7PM	Phone Mount	30

Para/Flex Common Configurations

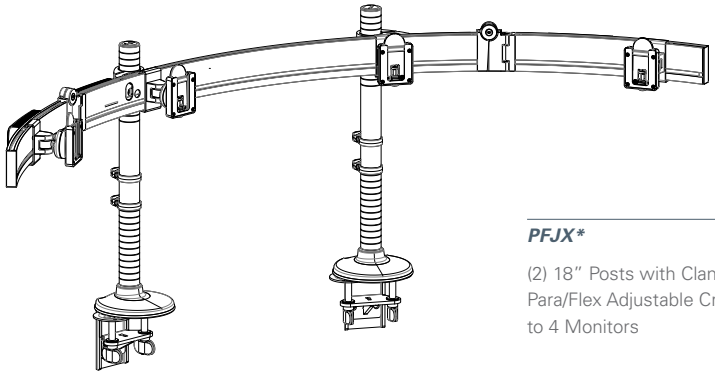

PFJX* *$870*

(2) 18″ Posts with Clamp Mounts and (1) Para/Flex Adjustable Crossbar for up to 4 Monitors

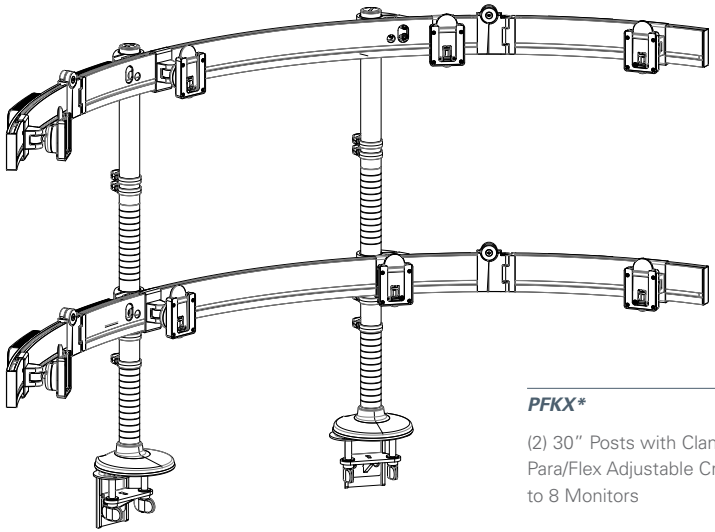

PFKX* *$1500*

(2) 30″ Posts with Clamp Mounts and (2) Para/Flex Adjustable Crossbars for up to 8 Monitors

*X Denotes color. Replace with S for silver/gray trim, W for polished aluminum/white trim or B for black/black trim

Build Your Para/Flex Product Code

To determine the list price for your Para/Flex solution, identify your choice for each component and build the product code as shown below. Add the prices for all the options selected.

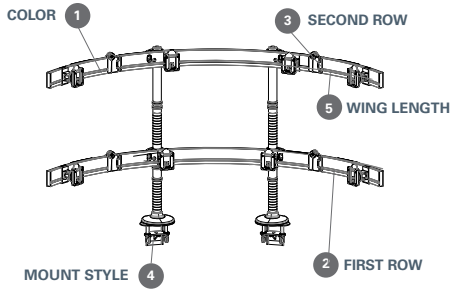

PRODUCT	COLOR	FIRST ROW	SECOND ROW	MOUNT STYLE	WING LENGTH
P2	1	2	3	4	5
	___	___	___ ___	___ ___	___

COMPONENT	CODE	DESCRIPTION	LIST PRICE
1 **COLOR**[1]	B	Black	—
	S	Silver	—
2 **FIRST ROW**	1	Base Unit with Standard Lower Crossbar	$1,050
	X	No Base Unit, No First-Row Crossbar (use when ordering Second-Row only)	0
3 **SECOND ROW**	2	Second-Row Crossbar Assembly	630
	X	No Second-Row Crossbar Assembly (use when ordering one row only)	0
4 **MOUNT STYLE**	NM	No Mount (use when ordering Second-Row only	0
	DM	Desk Mount	210
	CM	Clamp Mount	210
	HW	Horizontal Beam Mount for Woodtronics	210
	HI	Horizontal Beam Mount for Innovant AX50	210
	HL	Horizontal Beam Mount for LaCour	210
	HS	Horizontal Beam Mount for SBFI	210
	HD	Horizontal Beam Mount for DAS[2]	210
	VW	Vertical Slatwall Mount for Woodtronics	210
	VI	Vertical Slatwall Mount for Innovant	210
	VS	Vertical Slatwall Mount for SBFI Universal[2]	210
	VE	Vertical Slatwall Mount for Evans[2]	210
	VT	Vertical Slatwall Mount for SBFI Triax[2]	210
	VL	Vertical Slatwall Mount for LaCour[2]	210
	VB	Vertical Slatwall Mount for LaCour Beam System	210
5 **WING LENGTH**	–	Standard 14.5″ Wings	0
	L	Long 20″ Wings[3]	105

[1] Silver unit has Light Gray accents (cable managers, trim, etc.), Black unit has Black accents.
[2] Contact Humanscale Rep for availability.
[3] If ordering a two-row Para/Flex, add $210 as two long 20″ wings will ship with order.

Float Table

Build Your Float Table

To determine the list price for your Float Table, identify your choice for each component and build the product code as shown below. Add the prices for all the options selected.

PRODUCT	BASE COLOR	COUNTERBALANCE CRANK	WIDTH	DEPTH	TOP SIZE LAMINATE	TOP FINISH	TOP EDGE
1	2	3	4	5	6	7	8
___ ___	___	___	___	___	___ ___ ___ ___	___ ___	___

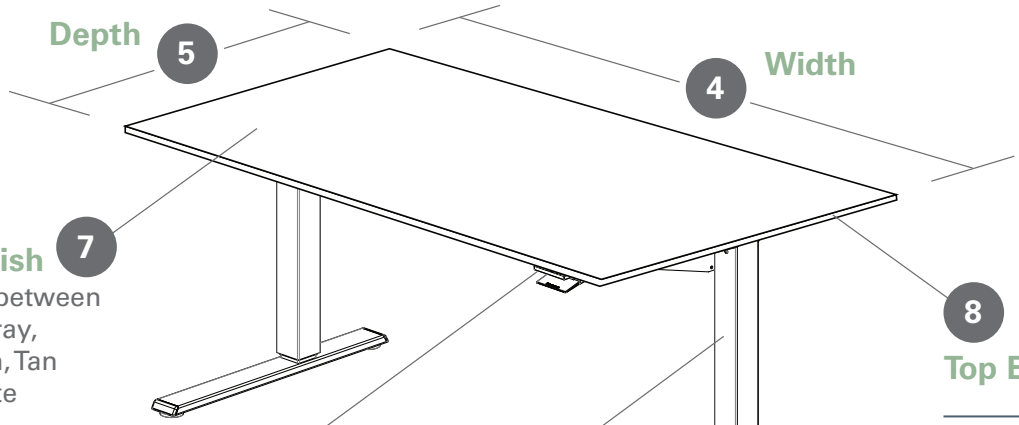

Float Component Pricing

COMPONENT	CODE	DESCRIPTION	LIST PRICE
1 PRODUCT	FN	Float Base Only (No Top)	$ -
	FT	Float with Top	-
2 BASE COLOR	B	Black	0
	S	Silver	0
	W	White	0
3 COUNTERBALANCE CRANK	M	Mounted	100
	R	Removable	-
4 WIDTH	4	For 48 inch - 54 inch wide tops	1,799
	6	For 60 inch - 72 inch wide tops	1,849
5 DEPTH	2	For 24 inch deep tops	-
	3	For 30 inch deep tops	-
6 TOP SIZE LAMINATE	2448	24 inch deep by 48 inch wide top	395
	2454	24 inch deep by 54 inch wide top	425
	2460	24 inch deep by 60 inch wide top	450
	2466	24 inch deep by 66 inch wide top	480
	2472	24 inch deep by 72 inch wide top	510
	3048	30 inch deep by 48 inch wide top	425
	3054	30 inch deep by 54 inch wide top	450
	3060	30 inch deep by 60 inch wide top	475
	3066	30 inch deep by 66 inch wide top	495
	3072	30 inch deep by 72 inch wide top	535
	XXXX	No Table Top	-
7 TOP FINISH	BL	Black	0
	GY	Gray	0
	PL	Platinum	0
	TN	Tan	0
	WH	White	0
	XX	No Table Top	-
8 TOP EDGE	F	Flat	0
	K	Knife[1]	0
	X	No Table Top	-

Note: For Float with no table top, select all X's for positions 6 - 8.
[1] Available Q3 2012

Access Rail

Desk-Mounted Access Rail

Build Your Product Code

To determine the product code and list price for the first segment of your Access Rail, identify each component required for your two-post configuration and insert the appropriate code in the chart below. For configurations requiring more than two Posts, you must create a separate product code for add-on configurations, which require only one Post. To calculate list price, total the cost of all components.

Product	Post Height/ Number Of Collars	Color (Silver)	Post Quantity & Mount Style	Number Of Rails	Rail Length
Access Rail	1	2	3	4	5
A1	__	S	__ __ __	__	__ __

1 POST HEIGHT/NUMBER OF COLLARS

The number of Collars is dependent upon the number of Rails, the desired Rail height, and the configuration. Two-Collar Posts accommodate one Rail. Three-Collar Posts accommodate one or two Rails. Four-Collar Posts accommodate one to three Rails. Five-Collar Posts accommodate one to four Rails. The maximum number of Collars for Rails longer than 48" is two (1-Rail).

2 COLOR

The Access Rail is currently available in Silver. Custom colors may be available. Consult your Humanscale representative.

3 POST QUANTITY & MOUNTING STYLE

For your first Access Rail segment, select a two-post configuration with the Mount that is appropriate for your work surface. Add-on configurations consist of one Post. Complete a separate product code for each configuration segment.

4 NUMBER OF RAILS

Select the desired number of Rails noting that the maximum number of Rails is one less than the total number of Collars on each Post.

5 RAIL LENGTH

Select the appropriate Rail length for your work space solution, noting that Rail length specified is the actual Rail length—not desk width—and that the Posts, Mounts and Rail Endcaps take up space that must be accommodated (see Access Rail Spec Guide).

Desk-Mounted Access Rail Component Pricing Chart

COMPONENT	CODE	DESCRIPTION	TWO COLLARS	THREE COLLARS	FOUR COLLARS	FIVE COLLARS
1 **POST HEIGHT/ NUMBER OF COLLARS**			2	3	4	5
2 **COLOR**	S	Silver	$ 0	$ 0	$ 0	$ 0
3 **POST QUANTITY & MOUNT STYLE**						
Two Posts for Initial Access Rail Configuration 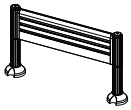	2BT	2 Posts, Bolt-Through Mount	380	460	680	760
	2DM	2 Posts, Direct Mount	380	460	680	760
	2CM	2 Posts, Heavy-Duty Clamp Mount	490	570	790	870
	2LC	2 Posts, Low-Profile Clamp Mount	430	530	—	—
One Post for Add-On Configurations 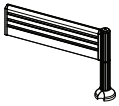	1BT	1 Post, Bolt-Through Mount	190	230	340	380
	1DM	1 Post, Direct Mount	190	230	340	380
	1CM	1 Post, Heavy-Duty Clamp Mount	245	285	395	435
	1LC	1 Post, Low-Profile Clamp Mount	215	265	—	—

COMPONENT	CODE	DESCRIPTION	TWO COLLARS	THREE COLLARS	FOUR COLLARS	FIVE COLLARS
4 **NUMBER OF RAILS**			1	2	3	4
5 **RAIL LENGTH**	18	18″ Rail	$180	$360	$540	$720
	24	24″ Rail	200	400	600	800
	30	30″ Rail	220	440	660	880
Rail	36	36″ Rail	260	520	780	1040
	42	42″ Rail	300	600	900	1200
	48	48″ Rail	345	690	1035	1380
	54	54″ Rail	390	—	—	—
	60	60″ Rail	440	—	—	—

Wall-Mounted Access Rail

Build Your Product Code

To determine the product code and list price for the your Wall-Mounted Access Rail, identify each component required for your configuration and insert the appropriate code in the chart below. To calculate list price, total the cost of all required components.

Product	Color (Silver)	Rail Length
Access Rail with Wall Mount	1	2
AW	S	— —

1 COLOR

The Access Rail is currently available in Silver. Custom colors may be available. Consult your Humanscale representative.

2 RAIL LENGTH

Select the appropriate Rail length for your work space solution, noting that Rail length specified is the actual Rail length.
Note: Wall Mounted Access Rails up to 42″ include two Wall Mount Brackets and 48-60″ Rails include three Wall Mount Brackets.

IMPORTANT: Humanscale bears no responsibility for installation of the Wall-Mounted Access Rail and is not liable in any way for the manner in which the Wall-Mounted Access Rails are attached to the wall. Installation should be managed by a structural engineer.

Wall-Mounted Access Rail Pricing Chart

Component	Code	Description	Price
1 Color	S	Silver	$0
2 Rail Length			
Rail	18	18″ Rail	330
	24	24″ Rail	350
	30	30″ Rail	370
	36	36″ Rail	410
	42	42″ Rail	450
	48	48″ Rail	545
	54	54″ Rail	590
	60	60″ Rail	640

Access Rail Extras

The following components and accessories are ordered separately from the Access Rail.

ADDITIONAL RAILS

An add-on for adding Rails to an existing installation.

Code	Description	Price
A118S	18″ Rail	$180
A124S	24″ Rail	200
A130S	30″ Rail	220
A136S	36″ Rail	260
A142S	42″ Rail	300
A148S	48″ Rail	345
A154S	54″ Rail	390
A160S	60″ Rail	440

EXTENSION KIT

Extends a 2-Collar Post to 4-Collar, or extends 3-Collar Post to 5-Collar: as an add-on for an existing Access Rail installation.

Code	Description	Price
A1EX2	2-Collar Extension Kit	$180

MONITOR ARMS

Consult the Humanscale Monitor Arms Pricing and Specification Guide for complete specs and additional configuration options.

Code	Description	Price
M7N1S9S4	M7 with Folding Links, Silver	$310
M4N1SAS4	M4 Adjustable Arm, Silver	480
M2SW2S	M2 Adjustable Arm, Polished Aluminum with White Trim	310

NOTEBOOK HOLDERS

Consult the Humanscale Monitor Arms Pricing and Specification Guide for complete specs.

Code	Description	Price
M7N1S9S4NH	M7 with Folding Links and Notebook Holder, Silver	$430
M4N1SAS4NH	M4 Adjustable Arm, with Notebook Holder, Silver	600

TASK LIGHTS

Consult the Humanscale Ergo Tools Pricing and Specification Guide for complete specs.

Code	Description	Price
ELUAS	Element LED Task Light, All Silver	$409
ELUAW	Element LED Task Light, White with Silver Accents	409
DA1EASA	Diffrient Task Light II, Single Arm, Silver	290
DA1EABA	Diffrient Task Light II, Single Arm, Black	290
DA2EASA	Diffrient Task Light II, Double Arm, Silver	322
DA2EABA	Diffrient Task Light II, Double Arm, Black	322
DX1EAS1	Diffrient Work Light II, Single Arm, Silver	290
DX1EAB1	Diffrient Work Light II, Single Arm, Black	290
DX2EAS1	Diffrient Work Light II, Double Arm, Silver	322
DX2EAB1	Diffrient Work Light II, Double Arm, Black	322

ACCESSORIES

Code	Description	Price
A11000C	Pencil Cup, Clear	$18
A11000S	Pencil Cup, Silver	18
A11001C	CD Holder, Clear	30
A11001S	CD Holder, Silver	30
A11003C	Paper Tray, Clear	54
A11003S	Paper Tray, Silver	54
A11004C	Accessory Tray, Clear	38
A11004S	Accessory Tray, Silver	38
A11005C	Phone Holder, Clear	44
A11005S	Phone Holder, Silver	44
A11007C	Legal/A4 Paper Tray, Clear	55
A11007S	Legal/A4 Paper Tray, Silver	55
A11008C	Folder Sorter Tray, Clear	64
A11008S	Folder Sorter Tray, Silver	64
A11009C	Binder Holder, Clear	30
A11009S	Binder Holder, Silver	30
A11014C	Cup Holder, Clear	20
A11014S	Cup Holder, Silver	20
A1PSSS	Small Peripheral Shelf, 12.5″ x 10″, Silver	75
A1PSLS	Large Peripheral Shelf, 18″ x 12.5″, Silver	95

Ergo Tools

Best-Selling Keyboard Systems

With advanced technology, award-winning designs and hundreds of options, Humanscale has remained the market leader in keyboard supports for 10 years running. We pioneered intuitive adjustability and eliminated knee obstruction. And these best-sellers remain several steps ahead of the pack.

All keyboard systems are available to ship within 72 hours.

White 6G System

- Standard White 6GW Mechanism
- White 900 or 950 Platform
- White High Clip Mouse* (8.5″ or 10″ Mousing Surface)
- Gray Gel Mouse Pad
- Gray Synthetic Leather Gel Palm Support

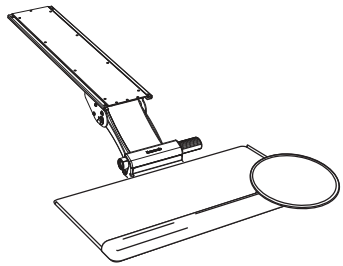

Std 6GW/8.5″	**6GW 900 90H G**	$465
	6GW 950 90H G	$465
Std 6GW/10″	**6GW 900 91H G**	$465
	6GW 950 91H G	$465

Clip Mouse System

- 2G or 6G Mechanism
- Standard 900 Platform
- High Clip Mouse (8.5″ or 10″ Mousing Surface)
- Synthetic Leather Palm Support (Gel or Foam)
- Standard Black color scheme

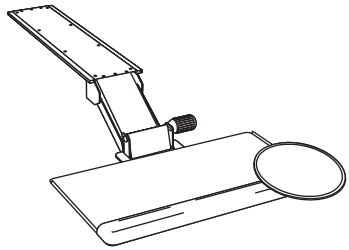

Shown with 2G mechanism

8.5″/Gel	**2G 900 90H G**	$450
	6G 900 90H G	$465
10″/Gel	**2G 900 91H G**	$450
	6G 900 91H G	$465
8.5″/Foam	**2G 900 90H F**	$432
	6G 900 90H F	$447
10″/Foam	**2G 900 91H F**	$432
	6G 900 91H F	$447

Swivel Mouse System

- 2G or 6G Mechanism
- Standard 900 Platform
- 8″ Swivel Mouse (Right or Dual)
- Synthetic Leather Palm Support (Gel or Foam)
- Standard Black color scheme

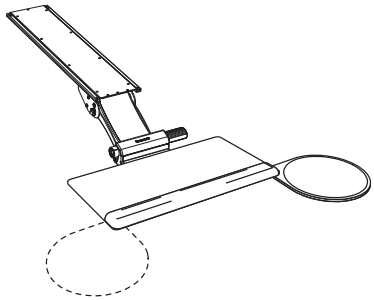

Shown with 6G mechanism

Right/Gel	**2G 900 11R G**	$430
	6G 900 11R G	$445
Dual/Gel	**2G 900 11D G**	$480
	6G 900 11D G	$495
Right/Foam	**2G 900 11R F**	$412
	6G 900 11R F	$427
Dual/Foam	**2G 900 11D F**	$462
	6G 900 11D F	$477

**Standard-height Clip Mouse also available for White 6G System.*

Build Your Keyboard System Product Code

Choose from our many mechanisms, keyboard platforms, mouse platforms, palm supports and track lengths to configure your own customized keyboard system.

White mechanisms ship with White keyboard and mouse platform, Gray palm support and mouse pad.
Platinum mechanisms ship with Platinum keyboard and mouse platform, Gray palm support and mouse pad.
Black mechanisms ship with Black keyboard and mouse platform, Black palm support and mouse pad.

Keyboard System Product Code:

Mechanism	Keyboard Platform	Mouse Platform	Palm Support	Track *(optional)*
1	2	3	4	5
_____	_____	_____	_____	_____

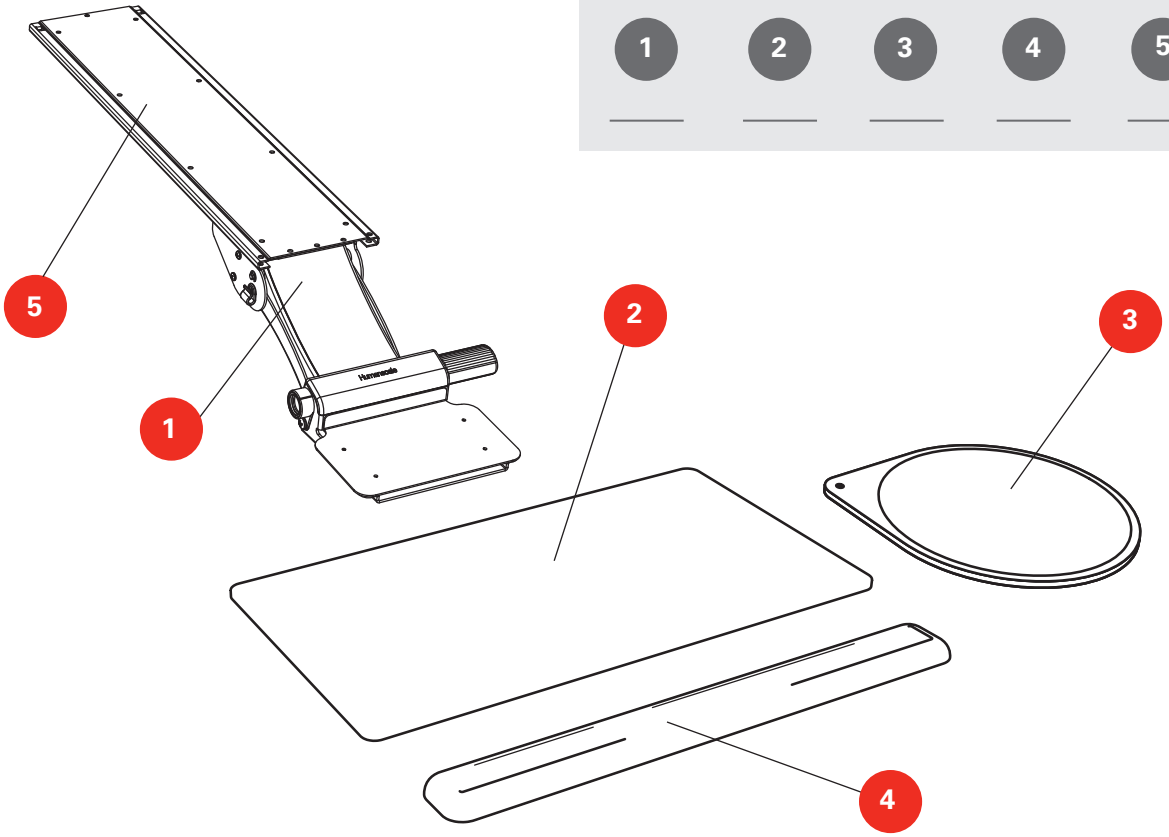

1 Mechanism Options

All keyboard mechanisms, with the exception of the KM, offer 0° to –15° tilt for low-risk typing postures. Build-Your-Own configurations are available in Black only, unless otherwise noted.

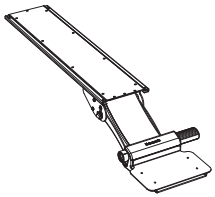

6G (Black), **6GW** (White) $255
Humanscale's most advanced keyboard mechanism to date, the 6G provides intuitive ergonomic adjustability and unmatched styling.
7" height adjustment
(1.75" above track to 5.25" below track)
Comes standard with 21.625" track

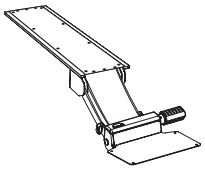

5G (Black), **5GV** (Platinum) $270
The world's best-selling keyboard mechanism, the 5G combines easy dial-a-tilt and height adjustability with the strongest arm on the market.
6.25" height adjustment
(1.25" above track to 5" below track)
Comes standard with 21.625" track

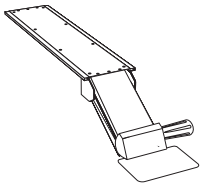

4G $375
The 4G represents revolutionary keyboard technology with simple dial-a-tilt keyboard angle adjustability.
6.25" height adjustment
(1.25" above track to 5" below track)
Comes standard with 21.625" track

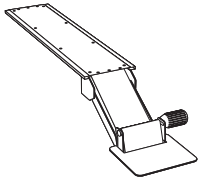

2G $240
The original standard bearer, the 2G offers independent height and tilt adjustment and unmatched stability.
6.25" height adjustment
(1.25" above track to 5" below track)
Comes standard with 21.625" track

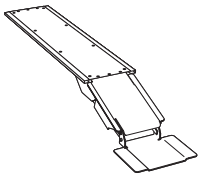

KM $220
The Standard Pre-Set Tilt Arm offers total knee clearance, knob-free adjustment and 0° tilt.
6.25" height adjustment
(1.25" above track to 5" below track)
Comes standard with 21.625" track

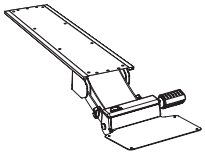

5GSM (Black), **5GSV** (Platinum) $270
The 5G Short Mechanism provides 5G functionality with a shorter arm for small workstations and tight spaces.
4" height adjustment
(0.5" above track to 3.5" below track)
Comes standard with 18" track

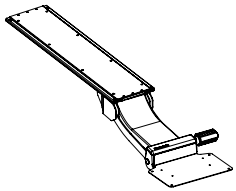

5GAD $335
The 5G Above Desk mechanism provides 5G functionality with a longer arm for use above the work surface.
13.5" height adjustment
(7.5" above track to 6" below track)
Comes standard with 27" track

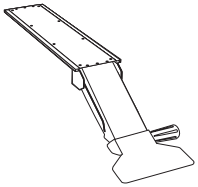

4GAD $335
The 4G Above Desk mechanism provides 4G functionality with a longer arm for use above the work surface.
11.5" height adjustment
(8.5" above track to 3" below track)
Comes standard with 27" track

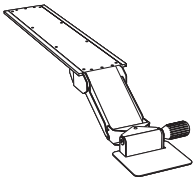

DS $360
The Double Swivel provides an additional pivot point for increased adjustability.
80° swivel at platform
6.25" height adjustment
(1.25" above track to 5" below track)
Comes standard with 25" track

Mechanism Accessory

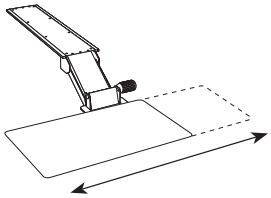

LS $86
The Lateral Slider allows the platform to be adjusted left or right a total of 8" for optimal keyboard positioning. It can be ordered with any keyboard mechanism by indicating "LS" after the mechanism code (e.g., 6GLS or 6GWLS).

2 Keyboard Platform Options

All Build-Your-Own platforms are available in Black only, unless otherwise noted.

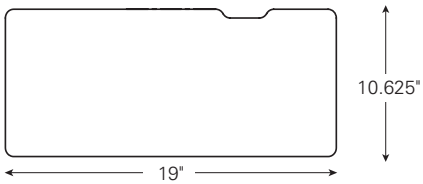

900 Standard $100

Available in White with 6GW.
Available in Platinum with 5GV or 5GSV.

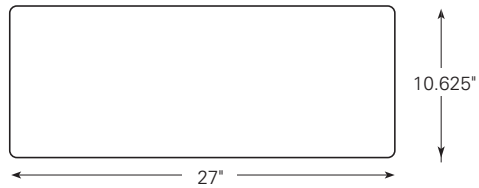

500 Big $150

Comes with built-in mousing surface.
Not available with other mouse platform options.
Available in White with 6GW.
Available in Platinum with 5GV or 5GSV.

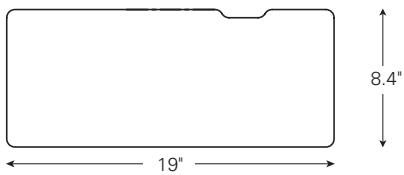

950 Standard Compact $100

Available in White with 6GW.
Available in Platinum with 5GV or 5GSV.

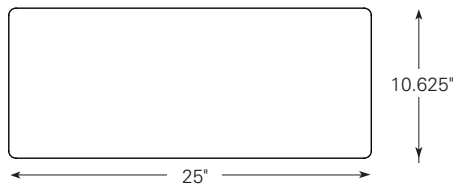

550 Big Compact $150

Comes with built-in mousing surface.
Not available with other mouse platform options.
Available in White with 6GW.
Available in Platinum with 5GV or 5GSV.

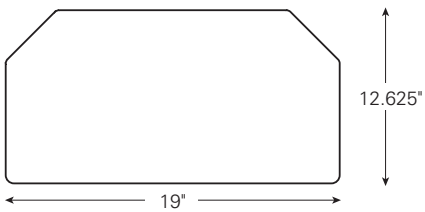

700 Diagonal $100

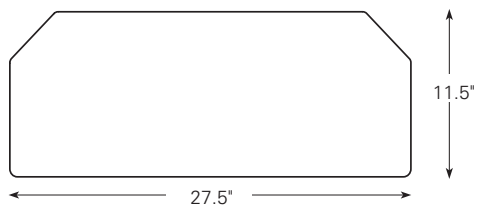

400 Diagonal Big $150

Comes with built-in mousing surface.
Not available with other mouse platform options.

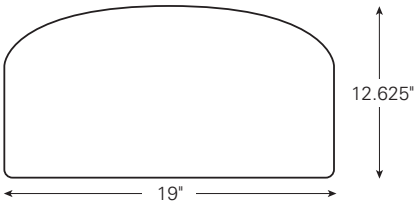

800 **Radiused** $100

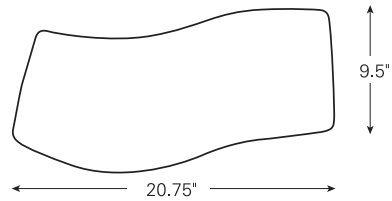

300 **Curved** $100

Not available with a palm support.

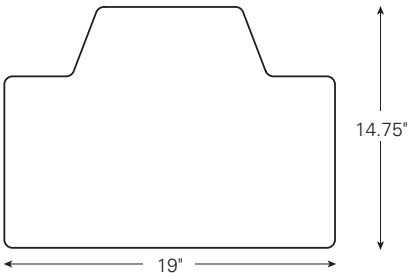

600 **Extender** $120

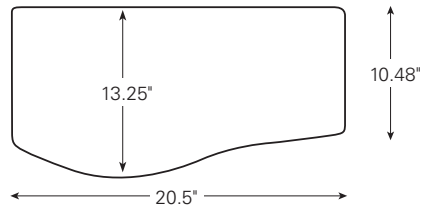

100 **Combo** $100

3 Mouse Platform Options

All Build-Your-Own mouse platforms are available in Black only, unless otherwise noted.

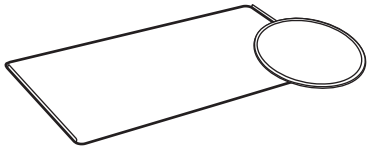

90	**8.5″ Clip**	$70
90H	**8.5″ High Clip**	$70

Available in White with 6GW.
Available in Platinum with 5GV or 5GSV.

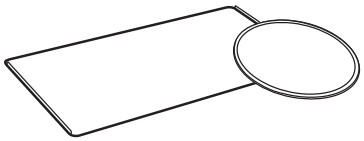

91	**10″ Clip**	$70
91H	**10″ High Clip**	$70

Available in White with 6GW.
Available in Platinum with 5GV or 5GSV.

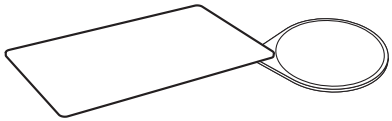

11R	**8″ Swivel Right**	$50
11L	**8″ Swivel Left** *(not pictured)*	$50
11D	**8″ Swivel Dual** *(not pictured)*	$100

Available in White with 6GW.
Not available with 5GV, or 5GSV.

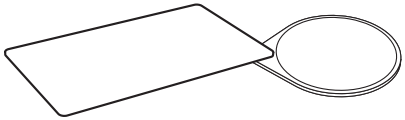

12R	**10″ Swivel Right**	$50
12L	**10″ Swivel Left** *(not pictured)*	$50
12D	**10″ Swivel Dual** *(not pictured)*	$100

Available in White with 6GW.
Not available with 5GV, or 5GSV.

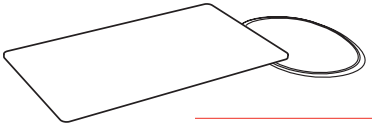

81R	**M² Right**	$50
81L	**M² Left** *(not pictured)*	$50
81D	**M² Dual** *(not pictured)*	$100

Available in White with 6GW.
Not available with 5GV, or 5GSV.

4 Palm Support Options

All Build-Your-Own palm supports are available in Black only, unless otherwise noted.

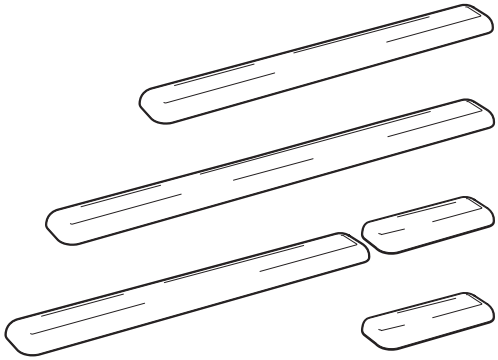

F	**19″ Foam with synthetic leather cover**	$22
G	**19″ Gel with Black or Gray synthetic leather cover**	$40
SS	**19″ Slim Palm Support Silver**	$40
SB	**19″ Slim Palm Support Black**	$40
F20	**20″ Foam with synthetic leather cover**	$22
G20	**20″ Gel with synthetic leather cover**	$40
F25	**25″ Foam with synthetic leather cover**	$28
G25	**25″ Gel with synthetic leather cover** *For 550 boards only*	$46
F27	**27″ Foam with synthetic leather cover**	$28
G27	**27″ Gel with Lycra knit cover** *For 400 and 500 boards only*	$45
FMP	**20″ and 7″ Foam with synthetic leather cover**	$35
GMP	**20″ and 7″ Gel with synthetic leather cover** *For 400 and 500 boards only*	$55
MP7F	**7″ Foam with synthetic leather cover**	$14
MP7G	**7″ Gel with synthetic leather cover**	$18

5 Track Options

All keyboard systems ship with track lengths noted on page 87 unless a different track length is specified. Please use these codes to order a specific track for your system.

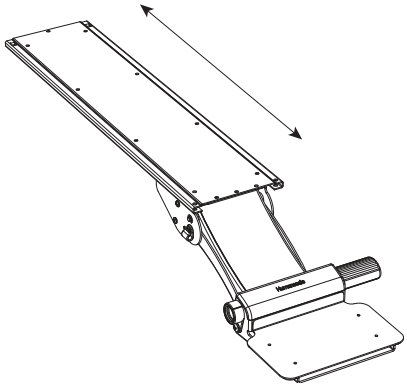

27	**27″ track**	N/C
25	**25″ track**	N/C
22	**Standard 21.625″ track**	N/C
18	**18″ track**	N/C
16	**16″ track**	N/C
14	**14″ track**	N/C
11	**11″ track**	N/C

Replacement Tracks with Hardware Pack *(if ordering without mechanism)*

RT27	**27″ track**	$60
RT25	**25″ track**	$55
RT22	**Standard 21.625″ track**	$45
RT18	**18″ track**	$45
RT16	**16″ track**	$45
RT14	**14″ track**	$45
RT11	**11″ track**	$45

Keyboard System Accessories

Mouse Pads

HSMP12TIPS $6

8″ Ergo Tips Mouse Pad

For 8″ – 8.5″ mouse platforms

HSMP12TIPS10 $7

9″ Ergo Tips Mouse Pad

For 10″ mouse platforms

CMPGEL8 $27

8.5″ Gel Mouse Pad - Black

CMPGEL8SLV $27

8.5″ Gel Mouse Pad - Silver

For 90 or 90H Clip Mouse

CMPGEL $27

10″ Gel Mouse Pad - Black

CMPGELSLV $27

10″ Gel Mouse Pad - Silver

For 91 or 91H Clip Mouse

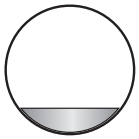

MPGEL8 $22

8.5″ Gel Mouse Pad

MPGEL10 $27

10″ Gel Mouse Pad

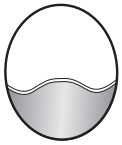

GPSMP $40

Desktop Mouse Pad with Gel Palm

Palm Support

MM10 $17

Mouse Mate

Corner Sleeves

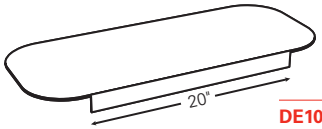

DE100 $135

29.5″ x 12.188″
Fits desks 1″ to 1.5″ thick

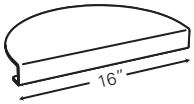

DE200/DE250 $85

16″ diameter
DE200 fits desks 1″ to 1.5″ thick
DE250 fits desks 1.5″ to 2.5″ thick

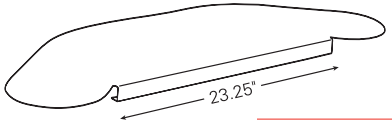

DE400/DE450 $220

38.5″ x 13.75″
DE400 fits desks 1″ to 1.5″ thick
DE450 fits desks 1.5″ to 2.5″ thick

Ergonomic Accessories

Input Device

Switch Mouse

SMUSB $125

Switch Mouse with USB connector, optical sensor and navigation dish

Ergonomic Accessories

Laptop Holders

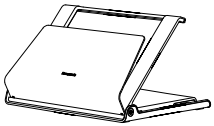

Notebook Manager

L6 $160

Maximum Dimensions:
13.5″ W x 10.9″ D x 10.1″ H
7.3″ height adjustability

(Accommodates notebook computers at least 10″ wide and 6″ deep, and up to 1.5″ thick)

Removable USB Hub

L6USB $32

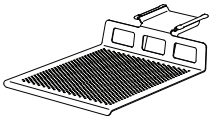

Tech Tray

TT $105

12″ W x 14″ D

Comes standard with 16″ track. Sits 3.5″ below track.

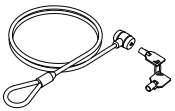

Keyed Security Lock

TT1 $32

Foot Rests

Rocking Foot Machine

FM500C (Cherry) $160

FM500K (Black) $160

12.25″ D x 16.75″ W x 4.5″ H

Foot Machine with Massage Balls

FM300B (Natural) $190

FM300BDC (Dark Cherry) $190

11.875″ D x 16″ W
Height Range: 3.75″ to 6.75″

Foot Machine

FM300 (Natural) $140

11.875″ D x 16″ W
Height Range: 3.75″ to 6.75″

Tilting Foot Rest

FM100 (Natural) $130

11.75″ D x 19″ W x 3.375″ H

Cable Management

NeatLinks — Small 17″

NL17SB (Black) $20

NL17SG (Gray) $20

Small 2.6″ Diameter, 17″ Length

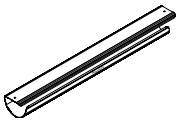

NeatLinks — Small 24″

NL24SB (Black) $22

NL24SG (Gray) $22

Small 2.6″ Diameter, 24″ Length

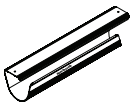

NeatLinks — Large 17″

NL17LB (Black) $22

NL17LG (Gray) $22

Large 3.6″ Diameter, 17″ Length

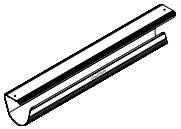

NeatLinks — Large 24″

NL24LB (Black) $24

NL24LG (Gray) $24

Large 3.6″ Diameter, 24″ Length

Ergonomic Accessories

CPU Holders

CPU200 (Black) $160
CPU200W (White) $160

Fits CPUs 1″ to 5″ wide by 12″ high
Max CPU Weight: 15 lbs.

Installed Dimensions:
6.7″ Width, CPU Height + 3.8″ *(plus additional 1.2″ with spacer option)*

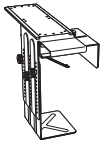

CPU300 $150
Fits CPUs 3.25″ to 9″ wide by 10.5″ to 18″ high
Max CPU Weight: 70 lbs.

Installed Dimensions:
CPU Width + 1.5″, CPU Height + 3″

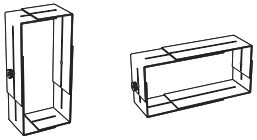

CPU450 $140

Fits CPUs 4″ to 8″ by 11.5″ to 20″
Max CPU Weight: 50 lbs.

Installed Dimensions:
CPU Width + 2.5″, CPU Height + 3.75″

CPU450STK $35

Swivel Track Upgrade Kit

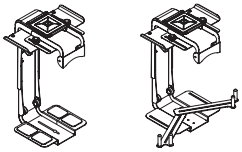

CPU555 $170

Fits CPUs 3″ to 9.5″ wide
by 12″ to 22″ high
Max CPU Weight: 70 lbs.

Installed Dimensions:
CPU Width + 3.5″, CPU Height + 4.5″

CPU555SEC $205

With Security System

CPU555STOOL $28

Replacement Tool Kit for CPU555SEC
(comes standard with CPU555SEC)

CPU555SECKIT $55

Retrofit Security Kit for CPU555
(comes standard with CPU555SEC)

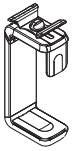

CPU600 (Black) $175
CPU600W (White) $175

Fits CPUs 3.5″ to 9″
wide by 12″ to 20″ high
Max CPU Weight: 50 lbs.

Installed Dimensions:
7″ or CPU Width + 1.7″ (whichever is greater),
CPU Height + 3.6″

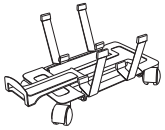

CPU Dolly

CPUDLY $160
Fits CPUs 3.25″ to 9″ wide

Installed Dimensions:
CPU Height + 3.75″

CPUDLYPLT $170

With Platform
For CPUs 1.5″ to 9″ wide

CPUPLATFORM $18

CPU Dolly Retrofit Platform

CPUDLYH $40

Telescoping Pull Handle

Quick Track

Quick Track and Bracket

16QT	16″ Quick Track	$60
22QT	22″ Quick Track	$60

Easily removable (without tools) front bracket makes swap-outs a snap.

To order, simply add "16QT or 22QT" to end *of product code (e.g., CPU55516QT).*

Comes standard with CPU600.

Glare Filters

Flat Panel Filters

with Tempered Glass and
95% Transmission (5% Tint)

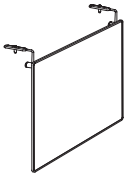

NOTE:
Filter fits size of monitor indicated by number in code. For example, FP15 fits 15" monitors.

Standard

FP15	14.25" W x 10.875" H	$130
FP17	14.625" W x 12.75" H	$230
FP19	15.75" W x 12.375" H	$260
FP20	17.125" W x 13" H	$275
FP21	18.125" W x 13.75" H	$290

Privacy

FP15PF	13.125" W x 10" H	$245
FP17PF	15" W x 11.5" H	$305
FP19PF	15.75" W x 12.375" H	$340
FP20PF	17.125" W x 13" H	$350
FP21PF	18.125" W x 13.75" H	$370

In-Line Document Holders

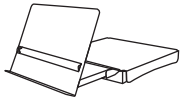

Copy Drawer

CH3000 (Putty)	$160
CH3000B (Black)*	$160

15" D x 15.5" W x 3" H

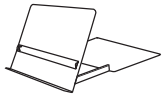

Copy Stand

CH1000 (Putty)	$130
CH1000B (Black)*	$130

12" D x 14" W x 3" H
For use with CRTs

Copy Stand Basic

CH900 (Putty)	$115
CH900B (Black)*	$115

11" D x 14" W x 3" H
For use with flat panel monitors

** Black may require up to an 8–10 week lead time. See your Humanscale sales representative for more information.*

Security Lock

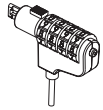

Security Lock

SECLOCK	$32

For CPUs, laptops, flat panels, etc.
Combination lock with 3' cord.
Fits all units with standard security keyhole

Keyed Security Lock

TT1	$32

For CPUs, laptops, flat panels, etc.
Keyed lock with 2' cord.
Fits all units with standard security keyhole

Humanscale and the Environment

RECYCLED MATERIALS			
Product	**Recycled Content**	**Recyclable Content**	**LEED Recycled Content** Post-Consumer +1/2 Pre-Consumer
Diffrient Task and Work Light with Base	90% recycled (63% Post-Consumer, 27% Pre-Consumer)	90% recyclable	77%
Diffrient Technology Light	38% recycled (13% Post-Consumer, 25% Pre-Consumer)	98% recyclable	26%
Element Classic, Element 790 Lights	81% recycled (55% Post-Consumer, 26% Pre-Consumer)	99% recyclable	68%
Element Vision Light	74% recycled (49% Post-Consumer, 26% Pre-Consumer)	98% recyclable	61%
Horizon Light	28% recycled (6% Post-Consumer, 22% Pre-Consumer)	99% recyclable	17%
Tolomeo Light	77% recycled (40% Post-Consumer, 27% Pre-Consumer)	87% recyclable	52%
Freedom Chair	62% recycled (43% Post-Consumer, 19% Pre-Consumer)	90% recyclable	53%
Freedom Saddle/ Pony Saddle	59% recycled (41% Post-Consumer, 18% Pre-Consumer)	90% recyclable	50%
Liberty Chair	54% recycled (32% Post-Consumer, 22% Pre-Consumer)	93% recyclable	43%
Liberty Side Chair	85% recycled (49% Post-Consumer, 36% Pre-Consumer)	93% recyclable	67%
Cinto Chair	26% recycled (15% Post-Consumer, 11% Pre-Consumer)	100% recyclable	21%
Diffrient World Chair	34% recycled (10% Post-Consumer, 24% Pre-Consumer)	97% recyclable	22%
M2 Monitor Arm	52% recycled (46% Post-Consumer, 6% Pre-Consumer)	99% recyclable	49%
M8 Monitor Arm	62% recycled (43% Post-Consumer, 19% Pre-Consumer)	99% recyclable	53%
M7 Monitor Arm	90% recycled (63% Post-Consumer, 27% Pre-Consumer)	100% recyclable	77%
M4 Monitor Arm	67% recycled (47% Post-Consumer, 20% Pre-Consumer)	100% recyclable	57%
Para/Flex	48% recycled (33% Post-Consumer, 15% Pre-Consumer)	99% recyclable	41%
Access Rail	98% recycled (70% Post-Consumer, 28% Pre-Consumer)	100% recyclable	84%
Keyboard Systems	25% recycled (15% Post-Consumer, 10% Pre-Consumer)	80% recyclable	20%
CPU600/ CPU200	51% recycled (34% Post-Consumer, 17% Pre-Consumer)	99% recyclable	43%
CPU555 CPU450 CPU300 CPU Dolly	30% recycled (21% Post-Consumer, 9% Pre-Consumer)	90% recyclable	26%
NeatLinks	50% recycled (50% Post-Consumer, 0% Pre-Consumer)	100% recyclable	50%
ZŌN Personal Air Purifier	41% recycled (15% Post-Consumer, 26% Pre-Consumer)	89% recyclable	28%
L6	30% recycled (23% Post-Consumer, 7% Pre-Consumer)	90% recyclable	27%

Humanscale®

Creating a more comfortable place to work

Customer Service
10 Inverness Drive East
Suite 100
Englewood, CO 80112
800 400 0625
303 858 9912
303 858 9916 fax
info@humanscale.com

U.S. Headquarters
11 East 26th Street
8th Floor
New York, NY 10010
212 725 4749
212 725 7545 fax

International Headquarters
13 Northburgh Street
London
EC1V 0JP
United Kingdom
+44 207 566 7990
+44 207 566 7991 fax
info@humanscale.co.uk

www.humanscale.com

HSPG0412-V1