Fire Apparatus Quotation for:
STATE OF OHIO TERM SCHEDULE

Quotation Number: 35810 Rev: 8

Unit Description: TDES-COMM

Quote Description: Tradition ES Pumper Commercial – Freightliner M2 2dr Salesperson:

Salescode	Extended Description	Qty	
Tradition ES Base Model			
01-105397	An apparatus being compliant to NFPA and ULC (as applicable) to be provided. The apparatus to include an officer side assembly with adjustable ladder storage.	1	
TESTING COMPLIANCE STANDARD			
01-105318	The OEM supplied components of the vehicle to meet the requirements of NFPA 1901, 2009 edition. All dimensions and components are subject to minor variations.	1	
CHASSIS MODEL			
02-101229	Chassis Prep M2 Cummins engine. Includes exhaust extension, rear tow eyes, high idle, master light switch, master battery switch, air inlet and battery charger receptacle.	1	
02-101245	M2 (2) door, 180" WB & 47" frame cut, front tow hooks, 12K & 23K axles, ABS brakes, 1100 sq.in. radiator, 50 gal. left hand fuel tank, EVS3000 transmission, (2) 1850CCA batteries, 270 alternator, ember separator and AC.	1	
BUMPERS			
02-101240	Freightliner three (3) piece front bumper. Bumper to be chrome and includes driver side mounting area for NFPA speaker.	1	
WHEEL OPTIONS			
02-100821	Chassis rims painted job color.	1	
TIRE OPTIONS			
02-101321	Tire pressure monitoring valve stem caps. For use with a chassis with 12K front and 23K rear axle.	1	
ENGINES & TRANSMISSIONS			
02-101241	Electronically limited speed to 68 MPH.	1	
02-101407	Cummins ISC 330 HP engine with exhaust brake. For use with ES Pumper only.	1	

Salescode	Extended Description	Qty	
CHASSIS OPTIONS			
02-101219	Diamond plate trim package for a (2) door Freightliner.	1	
02-101226	Two (2) hood-mounted OEM air horns with driver and officer mounted foot switches.	1	
02-101242	The commercial chassis to have seat belt and chassis pre-wiring for NFPA seating indicator and vehicle data recorder.	1	
02-101412	Freightliner Model Year and 2010 EPA Engine Surcharge.	1	
MIRRORS			
02-101239	Freightliner West Coast heated cab mirrors with remote control. Includes bright finish.	1	
SEATS			
02-101286	Seating Package Two (2) Door Freightliner. Includes One (1) Seats Inc 911 Universal Hi-Back Air Ride Driver and a Two (2) Person Bench Seat.	1	
02-101327	One (1) three person seating capacity tag- driver side area and two (2) seat belt warning tags- one (1) each cab door. For use with Freightliner chassis.	1	
MISC INTERIOR CAB OPTIONS			
02-101232	Cab gauge cluster with english dominant.	1	
CAB ELECTRICAL OPTIONS			
02-101291	Interior and exterior NFPA cab lighting package for (2) dr chassis. Consists of (2) incandescent interior and (2) incandescent under cab lights.	1	
BODY MODEL			
03-119069	Main Body (23MF). Includes: Driver side full height enhanced extended 34" front / 54" side assembly, Mainframe and headboard for 85" high body, Hosebed area, enhanced extended rear with full height B1 compartment with roll-up door with header, tailboard, rear NFPA steps and handrails.	1	
BODY COMPT RIGHT SIDE			
03-118999	Officer side 1/2 height body with 34" forward / 54" rearward compartment and adjustable ladder brackets.	1	
DOORS			
03-119008	Officer 1/2 side body satin finish roll-up door package. Includes header plate(s) and dust brush(es).	1	
03-119011	Driver full height side body satin finish roll-up door package. Includes header plate(s) and dust brush(es).	1	
SHELVES			

Salescode	Extended Description	Qty	
SHELVES			
03-119058	Fixed shelf at upper area offset. Locate in forward and rearward full height compartments.	1	
COVERS			
03-119033	Red vinyl hose bed cover with fill tower access flap. Includes fixed forward attachment with velcro sides with mechanical ends and end flap with manually released attachments.	1	
04-106273	Vinyl double crosslay cover. Includes mechanical hold-downs on top outer corners and quick release side flap hold downs. Cover color: Red	1	
PUMP MODULE			
04-106247	Main lower pump module. For use with a 23" mainframe.	1	
04-106249	Upper side mount module with area for double stacked crosslays w/divider (offset rearward). Includes deck gun channel and forward module area storage.	1	
04-106270	Runningboards for main pump module.	1	
PUMP PANELS			
04-106271	Pump panels for use with side mount pump module. Includes driver side fixed main and bleeder panel and swing down upper gauge panel with latching and hold-open cables. Officer side with fixed lower(s) and a swing down removable upper with latchings.	1	
WATER TANK			
03-119044	Tank with 1000 water. For use with 23" mainframe.	1	
WATER TANK OPTIONS			
04-106277	Tank Plug installed in rear tank inlet hole.	1	
TANK PLUMBING			
04-106260	Manual 3" tank-to-pump for use with QFLO pump on side mount pump module.	1	
HANDRAILS / STEPS			
03-119040	Four (4) folding steps- one (1) officer and three (3) driver side front compartment face. Includes two (2) handrails - one (1) officer side and one (1) driver side of pump module and (1) light up high on driver side compartment face.	1	
MISC BODY OPTIONS			
03-119002	Body compartment floors to be diamond plate.	1	
03-119004	Body compartments to be smooth plate (natural finish).	1	

Salescode	Extended Description	Qty	
MISC BODY OPTIONS			
03-119007	Diamond plate single axle wheel well. Includes bolt-on composite wheel well liners and mudflaps.	1	
03-119026	Double hardsuction storage with NFPA compliant restraints. Locate over adjustable ladder brackets.	1	
03-119029	Storage brackets for(1) attic ladder and (2) pike poles. Officer side compartment top.	1	
03-119036	Long hosebed divider.	1	
03-119053	Main (structural) body rubrail package. Includes white scotchlite inserts.	1	
SCBA BOTTLE STORAGE			
03-119042	Four (4) SCBA bottle storage. Located (2) each side in body wheel well area.	1	
PUMPS			
04-106275	Pump gear box to be 23X. For use with 1250 gpm QFLO pump.	1	
PLUMBING KITS			
04-106234	Plumbing Kit for use with a Hale Pump and Side Mount Pump Module. To include the Pressure Governor, (1) 2" Tank Fill, (1) 2.5" Driver Side Auxiliary Intake, (2) 2.5" Driver Side Discharges, (1) 2.5" Driver Side Rear Discharge (droop shipped loose), (2) 1.5" Preconnect Discharges, (1) 3" Deck Gun and (2) 6" Intake Caps (Shipped Loose).	1	
PUMP OPTIONS			
04-106243	Manifold for use with a side mount or top mount pump modules.	1	
DISCHARGES AND PRECONNECTS			
04-106236	2.5" officer side discharge (forward of steamer) with NFPA droop with cap. For use with Side Mount Pump Module.	1	
GAUGES			
04-106245	Pump module main and discharge gauges to be english dominant.	1	
04-106256	Water Tank Level Gauge. Locate on the pump operator panel.	1	
ELECTRICAL SYSTEMS			
05-109128	Vehicle data recorder - 2009 NFPA compliant. Includes occupant detection with display. Display location on cab dash above transmission shift panel.	1	
LIGHT BARS			
05-109115	Federal Signal JetSolaris model JLX6001C 60" LED with red Solaris reflectors with clear domes. Location: Centered on the front cab roof	1	

Salescode	Extended Description	Qty	
WARNING LIGHT PACKAGES			
05-109134	Federal Signal Impaxx LED lower level body warning light package. Includes (6) Impaxx LED light heads with bezels located (1) each side below the forward body compartment (offset rearward), (1) each side below the rearward body compartments (offset rearward) and (1) each side on rear of body down low below the taillights (offset outboard).	1	
05-109135	Federal Signal Impaxx LED lower level cab warning light package. Includes (4) Impaxx LED light heads wiith bezels located (1) each side of hood area and (1) each side forward facing mounted in grill area.	1	
WARNING LIGHTS			
05-109119	Federal Model SY12FS Sentry (PR)- red driver/amber officer. Location: Upper rear body.	1	
DOT LIGHTING			
05-109103	Body and cab electrical system.	1	
05-109109	Body and pump module incandescent DOT marker light package. Includes separate midship side marker and turn lighting.	1	
05-109136	Taillights Federal Signal DOT STT/BU. Includes 4" LED red stop/tail/turn and 4" LED clear back-up lights.	1	
LIGHTS - COMPARTMENT, STEP & GROUND			
05-109108	Incandescent rear step lighting.	1	
05-109137	Incandescent compartment light package. For use with driver full height, officer half side and full height rear.	1	
05-109140	Incandescent underbody ground lighting.	1	
LIGHTS - NON-WARNING			
05-109117	(3) deck light package. Locate Deck Lights - (2) at rear of body and (1) at front of hosebed.	1	
05-109141	Side mount pump module incandescent lighting. Includes (2) pump panel lights - (1) driver side and (1) officer side and (1) pump compartment light.	1	
MISC ELECTRICAL			
05-109118	NFPA cab siren and speaker package. Includes (1) PA300 siren with (1) ES100 speaker in driver side bumper.	1	
MISC LOOSE EQUIPMENT			
07-101187	The NFPA required defibrillator to be dealer or customer supplied.	1	
07-101188	DOT driveaway kit. Includes three (3) triangular reflectors with case.	1	

Salescode	Extended Description	Qty	
LOOSE EQUIPMENT PKGS			
07-101184	Ladder & Equipment Package. Includes: Alco-Lite PEL24, PRL14, FL10 w/feet, (1) 8' and (1) 10' pike pole, (2) 6"x10' hard suction hoses, (2) axes w/mntng brkts (ship loose) and (1) 6" strainer (ship loose).	1	
EXTERIOR PAINT			
02-101192	Paint cab DuPont L6572EG Red.	1	
08-101401	Paint body FLNA 3225 Red.	1	
STRIPING			
08-100559	4" White Scotchlite stripe. Locate low on cab and body.	1	
GRAPHICS			
08-101397	Chevron "A" style 6" printed sheet Scotchlite striping on rear of body (outboard rearward facing smooth plate panels of the rear compartment door and the rear driver and officer compartment face). Colors to be red and yellow.	1	
WARRANTY / STANDARD & EXTENDED			
09-000050	1 year full warranty.	1	
09-000052	10 Year/100,000 mile structural warranty.	1	
09-000053	Lifetime polypropylene warranty.	1	
09-000054	10 Year stainless steel plumbing warranty.	1	
09-100004	10 Year Limited paint, corrosion perforation warranty - for Sikkens paint.	1	
SUPPORT, DELIVERY, INSPECTIONS AND MANUALS			
09-000057	Manuals Operation / Service CD.	1	
PRICE			$170,614.

TRADITION ES

TDES-COMM

FREIGHTLINER M2 2 DOOR CHASSIS

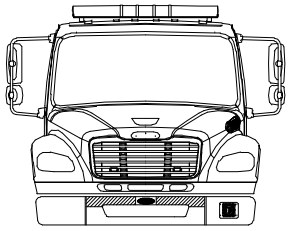

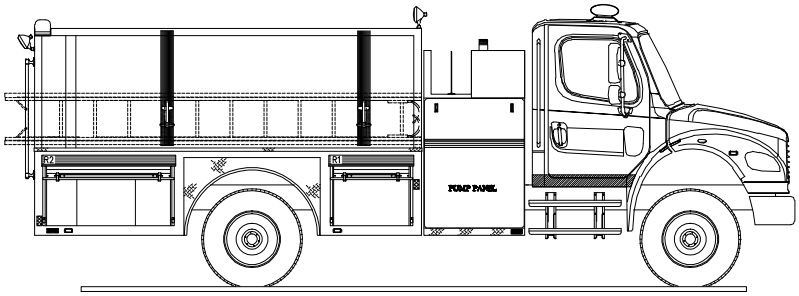

TRADITION ES

TDES-COMM

FREIGHTLINER M2 2 DOOR CHASSIS

HALE PUMP 1000 GALLON TANK			HOSELOAD: NFPA COMPLIANT		
COMPT.	**OPENING**		**INTERIOR DIMENSION**		
L1	32W	58H	34W 34W	30H 28H	12D UPPER 24D LOWER
R1	32W	20H	34W	28H	24D
L2	54W	26H	56W	26H	12D
R2	52W	20H	54W	28H	23D
L3	52W	58H	54W 54W	30H 28H	12D UPPER 23D LOWER
B1	36W	49H	40W 40W	11H 38H	21D UPPER 24D LOWER

THIS DRAWING IS FOR REFERENCE PURPOSES. ALL DIMENSIONS ARE SUBJECT TO MINOR VARIATIONS. SOME FEATURES SHOWN ARE NOT STANDARD.

This print is the property of Emergency One, Inc. and is loaned to you subject to return on demand, unless otherwise agreed to in writing by Emergency One, Inc. Its contents are confidential and must not be copied or submitted to third parties for use or examination.

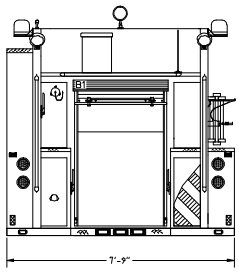

HOSEBED HEIGHT:
(FOR REFERENCE ONLY)
TO TAILBOARD: 54"
TO GROUND: 85"

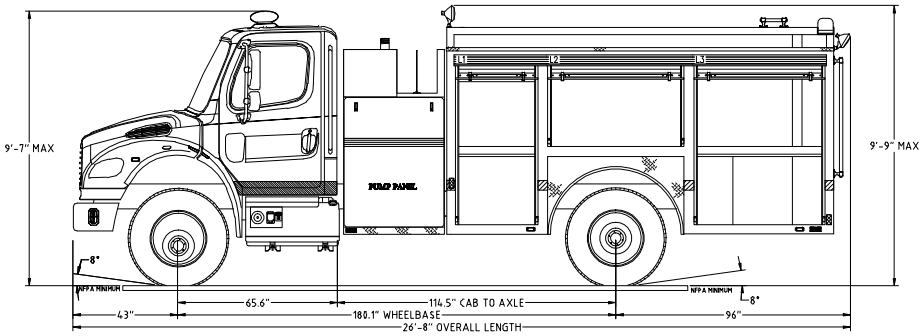

Fire Apparatus Quotation for:
STATE OF OHIO TERM SCHEDULE

Quotation Number: 35813 Rev: 7

Unit Description: TDES-COMM

Quote Description: Tradition ES Pumper Commercial – International 4400 2dr Salesperson:

Salescode	Extended Description	Qty	
Tradition ES Base Model			
01-105397	An apparatus being compliant to NFPA and ULC (as applicable) to be provided. The apparatus to include an officer side assembly with adjustable ladder storage.	1	
TESTING COMPLIANCE STANDARD			
01-105318	The OEM supplied components of the vehicle to meet the requirements of NFPA 1901, 2009 edition. All dimensions and components are subject to minor variations.	1	
CHASSIS MODEL			
02-101258	International 4400 (2) door, 181" WB & 47" frame cut, front tow hooks, 12K & 23K axles, ABS brakes, 816 sq. in. radiator, 50 gal. right hand fuel tank, EVS3000 transmission, (3) 1950CCA batteries, 320 alternator, ember separator and AC.	1	
02-101276	Chassis Prep International 4400 Maxx Force engine. Includes exhaust extension, rear tow eyes, high idle, master light switch, master battery switch, air inlet and battery charger receptacle.	1	
BUMPERS			
02-101273	International single piece chrome front bumper.	1	
02-101275	International West Coast Mirrors. Includes heat, remote control and clearance light on mirror.	1	
WHEEL OPTIONS			
02-100821	Chassis rims painted job color.	1	
TIRE OPTIONS			
02-101321	Tire pressure monitoring valve stem caps. For use with a chassis with 12K front and 23K rear axle.	1	
ENGINES & TRANSMISSIONS			
02-101241	Electronically limited speed to 68 MPH.	1	

Salescode	Extended Description	Qty	
ENGINES & TRANSMISSIONS			
02-101271	International Maxx Force DT570 330 HP engine. Includes Diamond Logix Exhaust and Engine Compression Brake.	1	
CHASSIS OPTIONS			
02-101242	The commercial chassis to have seat belt and chassis pre-wiring for NFPA seating indicator and vehicle data recorder.	1	
02-101267	Diamond plate trim package for a (2) door International. Includes a full length driver side and an officer side trim that will utilze pieces already supplied by the OEM.	1	
02-101272	Two (2) hood-mounted OEM air horns with driver and officer mounted foot switches.	1	
02-101411	International 4400 Model Year and 2010 EPA Engine Surcharge.	1	
SEATS			
02-101279	Seating Package Two (2) Door International. Includes One (1) Nat'l Brand Air Ride Driver and Two (2) Person Bench Seat.	1	
02-101324	One (1) three person seating capacity tag- driver side area and two (2) seat belt warning tags- one (1) each cab door. For use with International chassis.	1	
MISC INTERIOR CAB OPTIONS			
02-101232	Cab gauge cluster with english dominant.	1	
CAB ELECTRICAL OPTIONS			
02-101293	Interior and exterior NFPA cab lighting package for (2) dr chassis. Consists of (2) incandescent interior and (2) incandescent under cab lights.	1	
BODY MODEL			
03-119069	Main Body (23MF). Includes: Driver side full height enhanced extended 34" front / 54" side assembly, Mainframe and headboard for 85" high body, Hosebed area, enhanced extended rear with full height B1 compartment with roll-up door with header, tailboard, rear NFPA steps and handrails.	1	
BODY COMPT RIGHT SIDE			
03-118999	Officer side 1/2 height body with 34" forward / 54" rearward compartment and adjustable ladder brackets.	1	
DOORS			
03-119008	Officer 1/2 side body satin finish roll-up door package. Includes header plate(s) and dust brush(es).	1	
03-119011	Driver full height side body satin finish roll-up door package. Includes header	1	

Salescode	Extended Description	Qty	
DOORS			
	plate(s) and dust brush(es).		
SHELVES			
03-119058	Fixed shelf at upper area offset. Locate in forward and rearward full height compartments.	1	
COVERS			
03-119033	Red vinyl hose bed cover with fill tower access flap. Includes fixed forward attachment with velcro sides with mechanical ends and end flap with manually released attachments.	1	
04-106273	Vinyl double crosslay cover. Includes mechanical hold-downs on top outer corners and quick release side flap hold downs. Cover color: Red	1	
PUMP MODULE			
04-106247	Main lower pump module. For use with a 23" mainframe.	1	
04-106249	Upper side mount module with area for double stacked crosslays w/divider (offset rearward). Includes deck gun channel and forward module area storage.	1	
04-106270	Runningboards for main pump module.	1	
PUMP PANELS			
04-106271	Pump panels for use with side mount pump module. Includes driver side fixed main and bleeder panel and swing down upper gauge panel with latching and hold-open cables. Officer side with fixed lower(s) and a swing down removable upper with latchings.	1	
WATER TANK			
03-119044	Tank with 1000 water. For use with 23" mainframe.	1	
WATER TANK OPTIONS			
04-106277	Tank Plug installed in rear tank inlet hole.	1	
TANK PLUMBING			
04-106260	Manual 3" tank-to-pump for use with QFLO pump on side mount pump module.	1	
HANDRAILS / STEPS			
03-119040	Four (4) folding steps- one (1) officer and three (3) driver side front compartment face. Includes two (2) handrails - one (1) officer side and one (1) driver side of pump module and (1) light up high on driver side compartment face.	1	
MISC BODY OPTIONS			

Salescode	Extended Description	Qty	
MISC BODY OPTIONS			
03-119002	Body compartment floors to be diamond plate.	1	
03-119004	Body compartments to be smooth plate (natural finish).	1	
03-119007	Diamond plate single axle wheel well. Includes bolt-on composite wheel well liners and mudflaps.	1	
03-119026	Double hardsuction storage with NFPA compliant restraints. Locate over adjustable ladder brackets.	1	
03-119029	Storage brackets for(1) attic ladder and (2) pike poles. Officer side compartment top.	1	
03-119036	Long hosebed divider.	1	
03-119053	Main (structural) body rubrail package. Includes white scotchlite inserts.	1	
SCBA BOTTLE STORAGE			
03-119042	Four (4) SCBA bottle storage. Located (2) each side in body wheel well area.	1	
PUMPS			
04-106267	Pump gear box to be 23L. For use with 1250 gpm QFLO pump.	1	
PLUMBING KITS			
04-106234	Plumbing Kit for use with a Hale Pump and Side Mount Pump Module. To include the Pressure Governor, (1) 2" Tank Fill, (1) 2.5" Driver Side Auxiliary Intake, (2) 2.5" Driver Side Discharges, (1) 2.5" Driver Side Rear Discharge (droop shipped loose), (2) 1.5" Preconnect Discharges, (1) 3" Deck Gun and (2) 6" Intake Caps (Shipped Loose).	1	
PUMP OPTIONS			
04-106243	Manifold for use with a side mount or top mount pump modules.	1	
DISCHARGES AND PRECONNECTS			
04-106236	2.5" officer side discharge (forward of steamer) with NFPA droop with cap. For use with Side Mount Pump Module.	1	
GAUGES			
04-106245	Pump module main and discharge gauges to be english dominant.	1	
04-106256	Water Tank Level Gauge. Locate on the pump operator panel.	1	
ELECTRICAL SYSTEMS			
05-109133	Vehicle data recorder - 2009 NFPA compliant. Includes occupant detection with display. Display location on cab dash above transmission shifter.	1	

Salescode	Extended Description	Qty	
LIGHT BARS			
05-109115	Federal Signal JetSolaris model JLX6001C 60" LED with red Solaris reflectors with clear domes. Location: Centered on the front cab roof	1	
WARNING LIGHT PACKAGES			
05-109134	Federal Signal Impaxx LED lower level body warning light package. Includes (6) Impaxx LED light heads with bezels located (1) each side below the forward body compartment (offset rearward), (1) each side below the rearward body compartments (offset rearward) and (1) each side on rear of body down low below the taillights (offset outboard).	1	
05-109135	Federal Signal Impaxx LED lower level cab warning light package. Includes (4) Impaxx LED light heads wiith bezels located (1) each side of hood area and (1) each side forward facing mounted in grill area.	1	
WARNING LIGHTS			
05-109119	Federal Model SY12FS Sentry (PR)- red driver/amber officer. Location: Upper rear body.	1	
DOT LIGHTING			
05-109103	Body and cab electrical system.	1	
05-109109	Body and pump module incandescent DOT marker light package. Includes separate midship side marker and turn lighting.	1	
05-109136	Taillights Federal Signal DOT STT/BU. Includes 4" LED red stop/tail/turn and 4" LED clear back-up lights.	1	
LIGHTS - COMPARTMENT, STEP & GROUND			
05-109108	Incandescent rear step lighting.	1	
05-109137	Incandescent compartment light package. For use with driver full height, officer half side and full height rear.	1	
05-109140	Incandescent underbody ground lighting.	1	
LIGHTS - NON-WARNING			
05-109117	(3) deck light package. Locate Deck Lights - (2) at rear of body and (1) at front of hosebed.	1	
05-109141	Side mount pump module incandescent lighting. Includes (2) pump panel lights - (1) driver side and (1) officer side and (1) pump compartment light.	1	
MISC ELECTRICAL			
05-109132	NFPA cab siren and speaker package. Includes (1) PA300 siren with (1) ES100 speaker officer side behind bumper cut-out (includes mounting bracket).	1	

Salescode	Extended Description	Qty	
LIGHTS - QUARTZ			
05-109127	Federal NightFighter (PR) with internal pole. Pump module mounted.	1	
MISC LOOSE EQUIPMENT			
07-101187	The NFPA required defibrillator to be dealer or customer supplied.	1	
07-101188	DOT driveaway kit. Includes three (3) triangular reflectors with case.	1	
LOOSE EQUIPMENT PKGS			
07-101184	Ladder & Equipment Package. Includes: Alco-Lite PEL24, PRL14, FL10 w/feet, (1) 8' and (1) 10' pike pole, (2) 6"x10' hard suction hoses, (2) axes w/mntng brkts (ship loose) and (1) 6" strainer (ship loose).	1	
EXTERIOR PAINT			
02-100908	Cab paint FLNA 3225 Red. International.	1	
08-101401	Paint body FLNA 3225 Red.	1	
STRIPING			
08-100559	4" White Scotchlite stripe. Locate low on cab and body.	1	
GRAPHICS			
08-101397	Chevron "A" style 6" printed sheet Scotchlite striping on rear of body (outboard rearward facing smooth plate panels of the rear compartment door and the rear driver and officer compartment face). Colors to be red and yellow.	1	
WARRANTY / STANDARD & EXTENDED			
09-000050	1 year full warranty.	1	
09-000052	10 Year/100,000 mile structural warranty.	1	
09-000053	Lifetime polypropylene warranty.	1	
09-000054	10 Year stainless steel plumbing warranty.	1	
09-100004	10 Year Limited paint, corrosion perforation warranty - for Sikkens paint.	1	
SUPPORT, DELIVERY, INSPECTIONS AND MANUALS			
09-000057	Manuals Operation / Service CD.	1	
PRICE			$175,613.

TRADITION ES

TDES-COMM

INTERNATIONAL 4400 2 DOOR CHASSIS

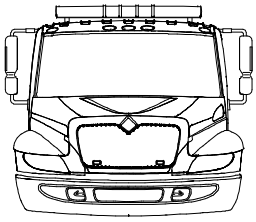

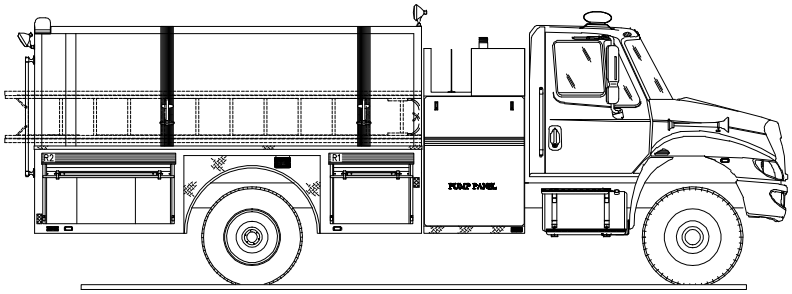

TRADITION ES

TDES-COMM

INTERNATIONAL 4400 2 DOOR CHASSIS

HALE PUMP 1000 GALLON TANK			HOSELOAD: NFPA COMPLIANT		
COMPT.	**OPENING**		**INTERIOR DIMENSION**		
L1	32W	58H	34W 34W	30H 28H	12D UPPER 24D LOWER
R1	32W	20H	34W	28H	24D
L2	54W	26H	56W	26H	12D
R2	52W	20H	54W	28H	23D
L3	52W	58H	54W 54W	30H 28H	12D UPPER 23D LOWER
B1	36W	49H	40W 40W	11H 38H	21D UPPER 24D LOWER

THIS DRAWING IS FOR REFERENCE PURPOSES. ALL DIMENSIONS ARE SUBJECT TO MINOR VARIATIONS. SOME FEATURES SHOWN ARE NOT STANDARD.

This print is the property of Emergency One, Inc. and is loaned to you subject to return on demand, unless otherwise agreed to in writing by Emergency One, Inc. Its contents are confidential and must not be copied or submitted to third parties for use or examination.

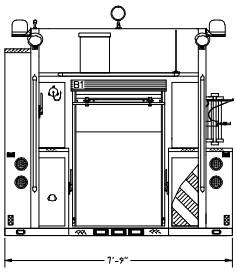

HOSEBED HEIGHT:
(FOR REFERENCE ONLY)
TO TAILBOARD: 54"
TO GROUND: 85"

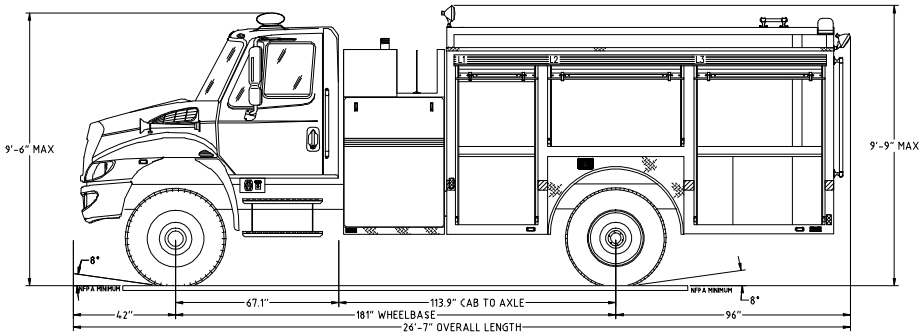

Fire Apparatus Quotation for:
STATE OF OHIO TERM SCHEDULE

Quotation Number: 35815 Rev: 5

Unit Description: TDES-CUST

Quote Description: Tradition ES Pumper Custom – Typhoon Chassis Salesperson:

Salescode	Extended Description	Qty	
Tradition ES Base Model			
01-105397	An apparatus being compliant to NFPA and ULC (as applicable) to be provided. The apparatus to include an officer side assembly with adjustable ladder storage.	1	
TESTING COMPLIANCE STANDARD			
01-105318	The OEM supplied components of the vehicle to meet the requirements of NFPA 1901, 2009 edition. All dimensions and components are subject to minor variations.	1	
CHASSIS MODEL			
01-105415	Custom ES cab / chassis (2010 EPA).	1	
BUMPERS			
01-105342	10" Stainless steel bumper with 4" extension. Includes driver side cut-out for (1) ES-100 speaker with grille, two (2) recessed mounted air horns with two (2) floor mounted foot switches. Custom ES.	1	
FRAME ASSEMBLY			
01-105416	Chassis frame assembly with 172" WB and 47" frame cut. For use with side mount pump module and QFLO pump. Includes front painted tow hooks (downward), rear painted tow eyes (below frame) and 65 gallon fuel tank with driver side fuel fill. 2010 EPA Custom ES.	1	
AXLE OPTIONS			
01-105351	Chassis axle package with FL-941 front axle with 18,000lb. suspension and RS-24-160 rear axle with 24,000lb. suspension. Includes front disc and rear cam brakes, Anti-Lock Brake System (ABS) and air Inlet located inside the driver side door area. Custom ES.	1	
WHEEL OPTIONS			
01-105356	Six (6) steel wheels for front and rear axle tire package. Outboard wheels (outboard side only) are painted job color. Custom ES.	1	

Salescode	Extended Description	Qty	
TIRE OPTIONS			
01-105354	Front and rear axle tire package. Includes two (2) Michelin 315 XZA-1 front tires and four (4) Michelin 11R XDN rear tires with mud and snow tread. Custom ES.	1	
01-105355	Tire pressure monitoring valve stem caps. Custom ES.	1	
ENGINES & TRANSMISSIONS			
01-105362	Electronically limited speed to 68 MPH. Custom ES.	1	
01-105422	Cummins ISC 330 HP engine. Includes Jacobs engine brake and Allison EVS3000P transmission. 2010 EPA Custom ES.	1	
COOLING PACKAGE			
01-105428	Engine cooling package For ISC/ISL engine. For use with air conditioning. 2010 EPA Custom ES.	1	
ALTERNATOR			
01-105395	Alternator / battery / battery charger package. Includes 270AMP Leece Neville alternator, (4) 12 volt batteries, E-ONE battery charger with receptacle (located outside driver door area), and jumper studs. Custom ES.	1	
CHASSIS OPTIONS			
01-105437	Diesel Exhaust Fluid (DEF) 5 gallon tank. Location: R1 floor offset forward. 2010 EPA Custom ES.	1	
CAB MODEL			
01-105429	Custom ES cab with flat roof. Includes (4) externally-mounted handrails, Lexan sun visors (PR) and mud flaps (PR). For use with 2010 EPA engines.	1	
GRILLE			
01-105380	ABS chrome plated grille. Custom ES.	1	
CAB DOOR OPTIONS			
01-105367	Four (4) cab doors with non-locking "L" style latches. For use with a flat roof cab. Includes front door windows with front vent, rear door roll-down windows, and (4) interior surface mounted reflective sign plates. Custom ES.	1	
MIRRORS			
01-105381	Velvac #2010 mirrors. Door mounted with remote control and heat. Custom ES.	1	
MISC EXTERIOR CAB OPTIONS			
01-105373	Fixed window on driver side of cab. Custom ES.	1	
01-105374	Fixed window on officer side of cab. Custom ES.	1	

Salescode	Extended Description	Qty	
MISC EXTERIOR CAB OPTIONS			
01-105376	Cab wheel well liners (PR). Custom ES.	1	
HVAC			
01-105379	Cab air conditioning for use with ISC or ISL engines. Includes front and rear floor heaters with diamond plate covers on rear units. Custom ES.	1	
SEATS			
01-105382	One (1) Bostrom (Non-SCBA) driver seat, Durawear gray. Includes air ride suspension, occupant detection switches and E-ONE logo. Custome ES.	1	
01-105383	Bostrom Fixed SCBA officer seat, Durawear gray. Includes occupant detection switches and E-ONE logo. Custom ES.	1	
01-105385	Bostrom fixed rearward facing SCBA seat, Durawear gray. Locate over driver side wheel well. Includes occupant detection switches and E-ONE logo. Custom ES.	1	
01-105387	Bostrom fixed rearward facing SCBA seat, Durawear gray. Locate over officer side wheel well. Includes occupant detection switches and E-ONE logo. Custom ES.	1	
01-105392	One seating capacity tag (4 person) to be installed visible by driver. Custom ES.	1	
MISC INTERIOR CAB OPTIONS			
01-105406	Insulation - front cab wall. Includes insulation on rear cab heater hose lines (if equipped). Custom ES.	1	
CAB ELECTRICAL OPTIONS			
01-105435	English dominant main cab gauge cluster. 2010 EPA Custom ES.	1	
BODY MODEL			
03-119071	Main Body (25MF). Includes: Driver side full height enhanced extended 34" front / 54" side assembly, Mainframe and headboard for 85" high body, Hosebed area, enhanced extended rear with full height B1 compartment with roll-up door with header, tailboard, rear NFPA steps with handrails and driver side wheel well fuel fill.	1	
BODY COMPT RIGHT SIDE			
03-118999	Officer side 1/2 height body with 34" forward / 54" rearward compartment and adjustable ladder brackets.	1	
DOORS			
03-119008	Officer 1/2 side body satin finish roll-up door package. Includes header plate(s) and dust brush(es).	1	
03-119011	Driver full height side body satin finish roll-up door package. Includes header plate(s) and dust brush(es).	1	

Salescode	Extended Description	Qty	
SHELVES			
03-119058	Fixed shelf at upper area offset. Locate in forward and rearward full height compartments.	1	
COVERS			
03-119033	Red vinyl hose bed cover with fill tower access flap. Includes fixed forward attachment with velcro sides with mechanical ends and end flap with manually released attachments.	1	
04-106273	Vinyl double crosslay cover. Includes mechanical hold-downs on top outer corners and quick release side flap hold downs. Cover color: Red	1	
PUMP MODULE			
04-106248	Main lower pump module. For use with a 25" mainframe.	1	
04-106249	Upper side mount module with area for double stacked crosslays w/divider (offset rearward). Includes deck gun channel and forward module area storage.	1	
04-106270	Runningboards for main pump module.	1	
PUMP PANELS			
04-106271	Pump panels for use with side mount pump module. Includes driver side fixed main and bleeder panel and swing down upper gauge panel with latching and hold-open cables. Officer side with fixed lower(s) and a swing down removable upper with latchings.	1	
WATER TANK			
03-119048	Tank with 1000 water. For use with 25" mainframe.	1	
WATER TANK OPTIONS			
04-106277	Tank Plug installed in rear tank inlet hole.	1	
TANK PLUMBING			
04-106260	Manual 3" tank-to-pump for use with QFLO pump on side mount pump module.	1	
HANDRAILS / STEPS			
03-119040	Four (4) folding steps- one (1) officer and three (3) driver side front compartment face. Includes two (2) handrails - one (1) officer side and one (1) driver side of pump module and (1) light up high on driver side compartment face.	1	
MISC BODY OPTIONS			
03-119002	Body compartment floors to be diamond plate.	1	
03-119004	Body compartments to be smooth plate (natural finish).	1	

Salescode	Extended Description	Qty	
MISC BODY OPTIONS			
03-119007	Diamond plate single axle wheel well. Includes bolt-on composite wheel well liners and mudflaps.	1	
03-119026	Double hardsuction storage with NFPA compliant restraints. Locate over adjustable ladder brackets.	1	
03-119029	Storage brackets for(1) attic ladder and (2) pike poles. Officer side compartment top.	1	
03-119036	Long hosebed divider.	1	
03-119053	Main (structural) body rubrail package. Includes white scotchlite inserts.	1	
03-119163	Cover plate for the DEF tank in forward area of the officer side forward body compartment.	1	
SCBA BOTTLE STORAGE			
03-119042	Four (4) SCBA bottle storage. Located (2) each side in body wheel well area.	1	
PUMPS			
04-106267	Pump gear box to be 23L. For use with 1250 gpm QFLO pump.	1	
PLUMBING KITS			
04-106234	Plumbing Kit for use with a Hale Pump and Side Mount Pump Module. To include the Pressure Governor, (1) 2" Tank Fill, (1) 2.5" Driver Side Auxiliary Intake, (2) 2.5" Driver Side Discharges, (1) 2.5" Driver Side Rear Discharge (droop shipped loose), (2) 1.5" Preconnect Discharges, (1) 3" Deck Gun and (2) 6" Intake Caps (Shipped Loose).	1	
PUMP OPTIONS			
04-106243	Manifold for use with a side mount or top mount pump modules.	1	
DISCHARGES AND PRECONNECTS			
04-106236	2.5" officer side discharge (forward of steamer) with NFPA droop with cap. For use with Side Mount Pump Module.	1	
GAUGES			
04-106245	Pump module main and discharge gauges to be english dominant.	1	
04-106256	Water Tank Level Gauge. Locate on the pump operator panel.	1	
ELECTRICAL SYSTEMS			
05-109147	Vehicle data recorder - 2009 NFPA compliant. Includes occupant detection with display. Display to be located on the diagnostic panel next to shifter. Custom ES.	1	
05-109148	Multiplex data logger. Custom ES.	1	

Salescode	Extended Description	Qty	
ELECTRICAL SYSTEMS			
05-109149	Modem for use with the E-ONE multiplex electrical system. Custom ES.	1	
05-109160	Multiplex electrical system. Includes headlights in lower bezels and LED marker lights. 2010 EPA Custom ES.	1	
LIGHT BARS			
05-109150	Federal Signal JetSolaris light bar model JLX6001C 60" LED with clear domes. Custom ES. Location: Centered on the front cab roof.	1	
WARNING LIGHT PACKAGES			
05-109134	Federal Signal Impaxx LED lower level body warning light package. Includes (6) Impaxx LED light heads with bezels located (1) each side below the forward body compartment (offset rearward), (1) each side below the rearward body compartments (offset rearward) and (1) each side on rear of body down low below the taillights (offset outboard).	1	
05-109152	Federal LED lower level cab warning light package. Includes (4) QL64 QuadraFlare LED light heads with red lenses. Custom ES.	1	
WARNING LIGHTS			
05-109119	Federal Model SY12FS Sentry (PR)- red driver/amber officer. Location: Upper rear body.	1	
SIRENS			
05-109154	Federal siren and speaker package. Includes (1) PA300 siren in center of center overhead console and (1) ES100 speaker driver side in bumper.	1	
DOT LIGHTING			
05-109109	Body and pump module incandescent DOT marker light package. Includes separate midship side marker and turn lighting.	1	
05-109136	Taillights Federal Signal DOT STT/BU. Includes 4" LED red stop/tail/turn and 4" LED clear back-up lights.	1	
LIGHTS - COMPARTMENT, STEP & GROUND			
05-109108	Incandescent rear step lighting.	1	
05-109137	Incandescent compartment light package. For use with driver full height, officer half side and full height rear.	1	
05-109140	Incandescent underbody ground lighting.	1	
LIGHTS - NON-WARNING			
05-109117	(3) deck light package. Locate Deck Lights - (2) at rear of body and (1) at front of hosebed.	1	

Salescode	Extended Description	Qty	
LIGHTS - NON-WARNING			
05-109141	Side mount pump module incandescent lighting. Includes (2) pump panel lights - (1) driver side and (1) officer side and (1) pump compartment light.	1	
05-109157	Light spot hand held Specialty 2150 hardwired on officer side. Custom ES.	1	
MISC LOOSE EQUIPMENT			
07-101187	The NFPA required defibrillator to be dealer or customer supplied.	1	
07-101188	DOT driveaway kit. Includes three (3) triangular reflectors with case.	1	
LOOSE EQUIPMENT PKGS			
07-101184	Ladder & Equipment Package. Includes: Alco-Lite PEL24, PRL14, FL10 w/feet, (1) 8' and (1) 10' pike pole, (2) 6"x10' hard suction hoses, (2) axes w/mntng brkts (ship loose) and (1) 6" strainer (ship loose).	1	
EXTERIOR PAINT			
08-101401	Paint body FLNA 3225 Red.	1	
08-101405	Paint cab Sikkens FLNA 3225 red. Custom ES.	1	
INTERIOR PAINT			
08-101451	The interior of the cab to be paint Zolatone gray. Custom ES.	1	
STRIPING			
08-101413	4" White Scotchlite stripe. Locate bottom of stripe even with top of bumper and straight back on body. Custom ES.	1	
GRAPHICS			
08-101397	Chevron "A" style 6" printed sheet Scotchlite striping on rear of body (outboard rearward facing smooth plate panels of the rear compartment door and the rear driver and officer compartment face). Colors to be red and yellow.	1	
WARRANTY / STANDARD & EXTENDED			
09-000050	1 year full warranty.	1	
09-000052	10 Year/100,000 mile structural warranty.	1	
09-000053	Lifetime polypropylene warranty.	1	
09-000054	10 Year stainless steel plumbing warranty.	1	
09-100004	10 Year Limited paint, corrosion perforation warranty - for Sikkens paint.	1	
SUPPORT, DELIVERY, INSPECTIONS AND MANUALS			
09-000057	Manuals Operation / Service CD.	1	

Salescode	Extended Description	Qty	
PRICE			$259,512.

TRADITION ES

TDES CUSTOM
CUSTOM 4X2 CHASSIS

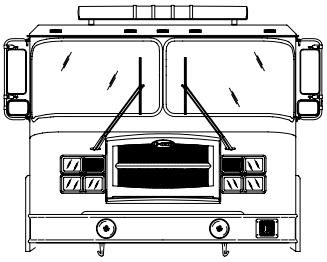

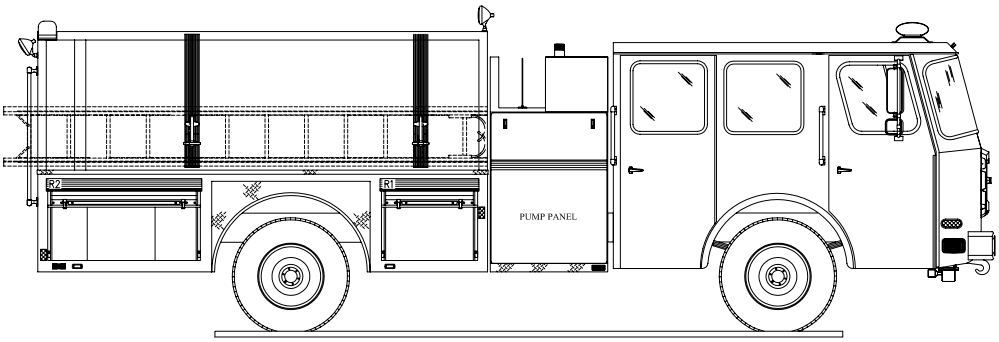

TRADITION ES

TDES CUSTOM
CUSTOM 4X2 CHASSIS

HALE PUMP 1000 GALLON TANK			HOSELOAD: NFPA COMPLIANT			
COMPT.	OPENING		INTERIOR DIMENSION			
L1	32W	58H	34W 34W	30H 28H	12D 24D	UPPER LOWER
R1	32W	20H	34W	28H	24D	
L2	54W	26H	56W	26H	12D	
R2	52W	20H	54W	28H	23D	
L3	52W	58H	54W 54W	30H 28H	12D 23D	UPPER LOWER
B1	36W	49H	40W 40W	11H 38H	21D 24D	UPPER LOWER

THIS DRAWING IS FOR REFERENCE PURPOSES. ALL DIMENSIONS ARE SUBJECT TO MINOR VARIATIONS. SOME FEATURES SHOWN ARE NOT STANDARD.

This print is the property of Emergency One, Inc. and is loaned to you subject to return on demand, unless otherwise agreed to in writing by Emergency One, Inc. Its contents are confidential and must not be copied or submitted to third parties for use or examination.

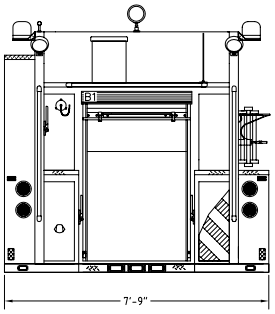

HOSEBED HEIGHT
(FOR REFERENCE ONLY)
TO TAILBOARD: 64"
TO GROUND: 88"

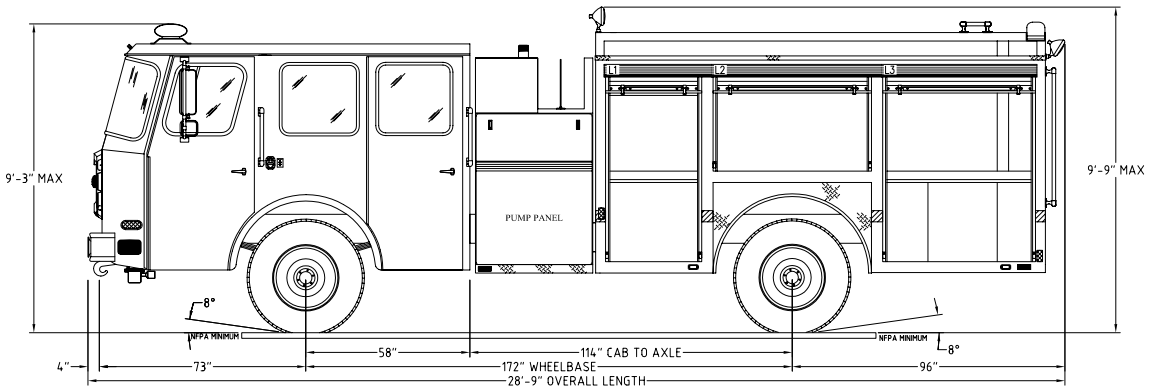

01	**BASE CONFIGURATIONS**		
01-105314	Base apparatus being compliant to NFPA. The apparatus to include and officer side assembly with adjustable ladder storage.		$145,995
01-105315	Base apparatus being compliant to NFPA. The apparatus to include and officer side assembly with a Zico drop down electric ladder rack.		$154,190
01-105316	Base apparatus being compliant to NFPA. The apparatus to include and officer side assembly with a Zico overhead hydraulic/electric ladder rack.		$165,135
01-105324	Base apparatus being compliant to NFPA. The apparatus to include an officer side assembly with adjustable ladder storage.		$147,950
01-105325	Base apparatus being compliant to NFPA. The apparatus to include an officer side assembly with a Zico drop down electric ladder rack.		$156,145
01-105326	Base apparatus being compliant to NFPA. The apparatus to include an officer side assembly with a Zico overhead hydraulic/electric ladder rack.		$167,090
01-105397	Base apparatus being compliant to NFPA. The apparatus to include an officer side assembly with adjustable ladder storage.		$147,590
01-105398	Base apparatus being compliant to NFPA. The apparatus to include an officer side assembly with a Zico drop down electric ladder rack.		$155,785
01-105399	Base apparatus being compliant to NFPA. The apparatus to include an officer side assembly with a Zico overhead hydraulic/electric ladder rack.		$166,730
01-105439	Base apparatus being compliant to NFPA. The apparatus to include an officer side storage tunnel with rear access.		$171,600
01-105440	Base apparatus being compliant to NFPA. The apparatus to include a driver and officer side storage tunnel with rear access.		$171,600
01	**CUSTOM CHASSIS OPTIONS**		
01-105341	Custom ES cab / chassis.	Custom ES	$86,710
01-105343	10" Stainless steel bumper with 20" gravel shield extension. Includes driver side cut-out for (1) ES-100 speaker with grille, two (2) recessed mounted air horns with two (2) floor mounted foot switches. Custom ES.	Custom ES	$848
01-105344	10" Stainless steel bumper w/ 20" gravel shield extension. Includes center-mounted hose storage tray w/ preconnect provision, hose tray lid, driver side cut-out for (1) ES-100 speaker w/ grille, and two (2) recessed mounted air horns w/ two (2) floor mounted foot switches. Custom ES.	Custom ES	$1,361
01-105346	Chassis frame assembly with 194" WB and 47" frame cut. For use with top mount pump module and QFLO pump. Includes front painted tow hooks (downward), rear painted tow eyes (below frame) and 65 gallon fuel tank with driver side fuel fill. Custom ES.	Custom ES	$358
01-105347	Chassis frame assembly with 206" WB and 47" frame cut. For use with top mount pump module with speed lays and QFLO pump. Includes front painted tow hooks (downward), rear painted tow eyes (below frame) and 65 gallon fuel tank with driver side fuel fill. Custom ES.	Custom ES	$398
01-105348	Chassis frame assembly with 172" WB and 47" frame cut. For use with side mount pump module and QMAX pump. Includes front painted tow hooks (downward), rear painted tow eyes (below frame) and 65 gallon fuel tank with driver side fuel fill. Custom ES.	Custom ES	$237
01-105349	Chassis frame assembly with 194" WB and 47" frame cut. For use with top mount pump module and QMAX pump. Includes front painted tow hooks (downward), rear painted tow eyes (below frame) and 65 gallon fuel tank with driver side fuel fill. Custom ES.	Custom ES	$422
01-105350	Chassis frame assembly with 206" WB and 47" frame cut. For use with top mount pump module with speed lays and QMAX pump. Includes front painted tow hooks (downward), rear painted tow eyes (below frame) and 65 gallon fuel tank with driver side fuel fill. Custom ES.	Custom ES	$417
01-105352	Chassis axle package with FL-941 front axle with 18,000lb. suspension and RS-24-160 rear axle with 24,000lb. suspension. Includes front disc and rear cam brakes, Electronic Stability Control (ESC) for 172" WB and air inlet located inside the driver side door area. Custom ES.	Custom ES	$3,231
01-105354	Front and rear axle tire package. Includes two (2) Michelin 315 XZA-1 front tires and four (4) Michelin 11R XDN rear tires with mud and snow tread. Custom ES.	Custom ES	$89
01-105357	Six (6) aluminum wheels for front and rear axle tire package. Custom ES.	Custom ES	$2,365
01-105358	Wheel trim package. For use with steel or aluminum wheels. Custom ES.	Custom ES	$374
01-105360	Cummins ISL 370 HP engine. Includes Jacobs engine brake and Allison EVS3000P transmission. Custom ES.	Custom ES	$6,894
01-105361	Cummins ISL 425 HP engine. Includes Jacobs engine brake and Allison EVS3000P transmission. Custom ES.	Custom ES	$8,721
01-105365	Custom ES cab with 12" vista roof. Includes (4) externally-mounted handrails, Lexan sun visors (PR) and mud flaps (PR). Vista has no windows.	Custom ES	$3,463
01-105366	Custom ES cab with 12" vista roof. Includes vista windows on all four sides, (4) externally-mounted handrails, Lexan sun visors (PR) and mud flaps (PR).	Custom ES	$3,850
01-105368	Four (4) cab doors with locking "L" style latches (CH751). For use with a flat roof cab. Includes front door windows with front vent, rear door roll-down windows, and (4) interior surface mounted reflective sign plates. Custom ES.	Custom ES	$48
01-105370	Four (4) cab doors with locking "L" style latches (CH751). For use with a 12" vista roof cab. Includes front door windows with front vent, rear door roll-down windows, and (4) interior surface mounted reflective sign plates. Custom ES.	Custom ES	$48
01-105371	Medical cabinet - driver side cab wheel well. Includes (1) external locking roll-up door (satin finish), (1) vertically-hinged internal door with locking push button latch, (2) adjustable shelves. Custom ES.	Custom ES	$1,133
01-105372	Medical cabinet - officer side cab wheel well. Includes (1) external locking roll-up door (satin finish), (1) vertically-hinged internal door with locking push button latch, (2) adjustable shelves. Custom ES.	Custom ES	$1,133
01-105375	Rear cab wall windows fixed narrow (PR). Custom ES.	Custom ES	$244

01-105379	Cab air conditioning for use with ISC or ISL engines. Includes front and rear floor heaters with diamond plate covers on rear units. Custom ES.	Custom ES	$1,956
01-105384	Bostrom Fixed SCBA officer seat, Durawear gray. Includes SecureAll SCBA brkt, occupant detection switches and E-ONE logo. Custom ES.	Custom ES	$419
01-105386	Bostrom fixed rearward facing SCBA seat, Durawear gray. Locate over driver side wheel well. Includes SecureAll SCBA brkt, occupant detection switches and E-ONE logo. Custom ES.	Custom ES	$552
01-105388	Bostrom fixed rearward facing SCBA seat, Durawear gray. Locate over officer side wheel well. Includes SecureAll SCBA brkt, occupant detection switches and E-ONE logo. Custom ES.	Custom ES	$552
01-105389	Rear two (2) person bench seat, Durawear gray. Includes (2) Bostrom SCBA seat backs. Locate centered on rear cab wall. Includes occupant detection switches and E-ONE logos. Custom ES.	Custom ES	$1,955
01-105390	Rear two (2) person bench seat, Durawear gray. Includes (2) Bostrom SCBA seat backs. Locate centered on rear cab wall. Includes SecureAll SCBA brkts, occupant detection switches and E-ONE logos. Custom ES.	Custom ES	$3,123
01-105396	Alternator / battery / battery charger package. Includes 320AMP Leece Neville alternator, (4) 12 volt batteries, E-ONE battery charger with receptacle (located outside driver door area), and jumper studs. Custom ES.	Custom ES	$492
01-105401	Metric dominant main cab gauge cluster. Custom ES.	Custom ES	$295
01-105402	Block heater 1000 watt. Includes 15 amp inlet receptacle located outside driver's door next to handrail. Custom ES.	Custom ES	$314
01-105403	10" Stainless steel bumper w/ 20" gravel shield extension. Includes front intake provision, center-mounted hose storage tray w/ lid, driver side cut-out for (1) ES-100 speaker w/ grille, and two (2) recessed mounted air horns w/ two (2) floor mounted foot switches. Custom ES.	Custom ES	$1,361
01-105404	10" Stainless steel bumper w/ 20" gravel shield extension. Includes front intake provision, center-mounted hose storage tray w/ preconnect provision, hose tray lid, driver side cut-out for (1) ES-100 speaker w/ grille, and two (2) recessed mounted air horns w/ two (2) floor mounted foot switches. Custom ES.	Custom ES	$1,361
01-105405	Battery Splash Cover for ULC compliance. Custom ES.	Custom ES	$208
01-105406	Insulation - front cab wall. Custom ES.	Custom ES	$106
01-105407	Chassis axle package with FL-941 front axle with 18,000lb. suspension and RS-24-160 rear axle with 24,000lb. suspension. Includes front disc and rear cam brakes, Electronic Stability Control (ESC), and air inlet located inside the driver side door area. 180" and 194" WB Custom ES.	Custom ES	$3,231
01-105408	Chassis axle package with FL-941 front axle with 18,000lb. suspension and RS-24-160 rear axle with 24,000lb. suspension. Includes front disc and rear cam brakes, Electronic Stability Control (ESC), and air inlet located inside the driver side door area. 202", 206", and 214" WB Custom ES.	Custom ES	$3,231
01-105409	Cummins ISC 330 HP engine. Includes Jacobs engine brake, clutch fan and Allison EVS3000P transmission. Custom ES.	Custom ES	$1,089
01-105410	Cummins ISL 370 HP engine. Includes Jacobs engine brake, clutch fan and Allison EVS3000P transmission. Custom ES.	Custom ES	$7,984
01-105411	Cummins ISL 425 HP engine. Includes Jacobs engine brake, clutch fan and Allison EVS3000P transmission. Custom ES.	Custom ES	$9,810
01-105413	Custom ES cab with 12" vista roof. Includes (4) externally-mounted handrails, Lexan sun visors (PR) and mud flaps (PR). Vista has no windows. For use with ESC.	Custom ES	$3,463
01-105414	Custom ES cab with 12" vista roof. Includes vista windows on all four sides, (4) externally-mounted handrails, Lexan sun visors (PR) and mud flaps (PR). For use with ESC.	Custom ES	$3,850
01-105415	Custom ES cab / chassis (2010 EPA).	Custom ES	$98,810
01-105417	Chassis frame assembly with 194" WB and 47" frame cut. For use with top mount pump module and QFLO pump. Includes front painted tow hooks (downward), rear painted tow eyes (below frame) and 65 gallon fuel tank with driver side fuel fill. 2010 EPA Custom ES.	Custom ES	$358
01-105418	Chassis frame assembly with 206" WB and 47" frame cut. For use with top mount pump module with speed lays and QFLO pump. Includes front painted tow hooks (downward), rear painted tow eyes (below frame) and 65 gallon fuel tank with driver side fuel fill. 2010 EPA Custom ES.	Custom ES	$398
01-105419	Chassis frame assembly with 172" WB and 47" frame cut. For use with side mount pump module and QMAX pump. Includes front painted tow hooks (downward), rear painted tow eyes (below frame) and 65 gallon fuel tank with driver side fuel fill. 2010 EPA Custom ES.	Custom ES	$237
01-105420	Chassis frame assembly with 194" WB and 47" frame cut. For use with top mount pump module and QMAX pump. Includes front painted tow hooks (downward), rear painted tow eyes (below frame) and 65 gallon fuel tank with driver side fuel fill. 2010 EPA Custom ES.	Custom ES	$422
01-105421	Chassis frame assembly with 206" WB and 47" frame cut. For use with top mount pump module with speed lays and QMAX pump. Includes front painted tow hooks (downward), rear painted tow eyes (below frame) and 65 gallon fuel tank with driver side fuel fill. 2010 EPA Custom ES.	Custom ES	$417
01-105423	Cummins ISL 380 HP engine. Includes Jacobs engine brake and Allison EVS3000P transmission. 2010 EPA Custom ES.	Custom ES	$6,894
01-105424	Cummins ISL 450 HP engine. Includes Jacobs engine brake and Allison EVS3000P transmission. 2010 EPA Custom ES.	Custom ES	$8,721
01-105425	Cummins ISC 330 HP engine. Includes Jacobs engine brake, clutch fan and Allison EVS3000P transmission. 2010 EPA Custom ES.	Custom ES	$1,089
01-105426	Cummins ISL 380 HP engine. Includes Jacobs engine brake, clutch fan and Allison EVS3000P transmission. 2010 EPA Custom ES.	Custom ES	$7,984
01-105427	Cummins ISL 450 HP engine. Includes Jacobs engine brake, clutch fan and Allison EVS3000P transmission. 2010 EPA Custom ES.	Custom ES	$9,810
01-105430	Custom ES cab with 12" vista roof. Includes (4) externally-mounted handrails, Lexan sun visors (PR) and mud flaps (PR). Vista has no windows. For use with 2010 EPA engines.	Custom ES	$3,463
01-105431	Custom ES cab with 12" vista roof. Includes vista windows on all four sides, (4) externally-mounted handrails, Lexan sun visors (PR) and mud flaps (PR). For use with 2010 EPA engines.	Custom ES	$3,850

01-105433	Custom ES cab with 12" vista roof. Includes (4) externally-mounted handrails, Lexan sun visors (PR) and mud flaps (PR). Vista has no windows. For use with ESC and 2010 EPA engines.	Custom ES	$3,463
01-105434	Custom ES cab with 12" vista roof. Includes vista windows on all four sides, (4) externally-mounted handrails, Lexan sun visors (PR) and mud flaps (PR). For use with ESC and 2010 EPA engines.	Custom ES	$3,850
01-105442	Chassis frame assembly with 202" WB and 47" frame cut. For use with top mount pump module and QFLO pump. Includes front painted tow hooks (downward), rear painted tow eyes (below frame) with rear underbody support and 65 gallon fuel tank with driver side fuel fill. 2010 EPA Custom ES.	Custom ES	$358
01-105443	Chassis frame assembly with 214" WB and 47" frame cut. For use with top mount pump module with speed lays and QFLO pump. Includes front painted tow hooks (downward), rear painted tow eyes (below frame) with rear underbody support and 65 gallon fuel tank with driver side fuel fill. 2010 EPA Custom ES.	Custom ES	$398
01-105444	Chassis frame assembly with 180" WB and 47" frame cut. For use with side mount pump module and QMAX pump. Includes front painted tow hooks (downward), rear painted tow eyes (below frame) with rear underbody support and 65 gallon fuel tank with driver side fuel fill. 2010 EPA Custom ES.	Custom ES	$237
01-105445	Chassis frame assembly with 202" WB and 47" frame cut. For use with top mount pump module and QMAX pump. Includes front painted tow hooks (downward), rear painted tow eyes (below frame) with rear underbody support and 65 gallon fuel tank with driver side fuel fill. 2010 EPA Custom ES.	Custom ES	$422
01-105446	Chassis frame assembly with 214" WB and 47" frame cut. For use with top mount pump module with speed lays and QMAX pump. Includes front painted tow hooks (downward), rear painted tow eyes (below frame) with rear underbody support and 65 gallon fuel tank with driver side fuel fill. 2010 EPA Custom ES.	Custom ES	$417

02	COMMERCIAL CHASSIS		
02-100209	Driver Controlled Dif Lock. International chassis with 23,000 rear axle.	INT	$642
02-100919	Cab paint two tone. Upper FLNA 4006 White / lower FLNA 3204 Red. International.	INT	$760
02-100920	Cab paint two tone. Upper FLNA 4006 White / lower FLNA 3225 Red. International.	INT	$760
02-100925	Cab paint two tone. Upper FLNA 4006 White / lower FLNA 1219 Yellow. International.	INT	$760
02-101158	Driver Controlled Dif Lock. International chassis with 26,000 rear axle.	INT	$790
02-101195	Paint cab two-tone. LowerDuPont L6572EG Red/UpperDuPont L0006EG White.	FL	$2,347
02-101196	Paint cab two-tone. LowerDuPont L6636EG Red/UpperDuPont L0006EG White.	FL	$2,347
02-101197	Paint cab two-tone. Lower DuPont L0006 White/ Upper DuPont L6572EG Red.	FL	$2,347
02-101198	Paint cab two-tone. Lower DuPont 766281EG Yellow/ Upper DuPont L0006EG White.	FL	$2,347
02-101211	Cummins ISC 300 HP engine with Cummins C-Brake.	FL	$2,176
02-101213	Cummins ISC 330 HP engine.	FL	$3,300
02-101214	Cummins ISC 330 HP engine with Cummins C-Brake Engine Compression Brake.	FL	$5,655
02-101215	Seating Package Two (2) Door Freightliner. Includes One (1) Talladega 910 Hi-Back Air Ride Driver and One (1) 911 Fixed Officer (Non-SCBA).	FL	$316
02-101217	Universal 911 Seating Package. Includes one (1) hi-back air ride suspension driver seat, one (1) hi-back fixed SCBA officer seat, and three (3) fixed SCBA rear seats.	FL	$2,141
02-101219	Diamond plate trim package for a (2) door Freightliner.	FL	$1,150
02-101220	Diamond plate trim package for a (4) door Freightliner.	FL	$1,848
02-101222	Freightliner three (3) piece front bumper. Bumper to be chrome and includes driver side mounting area for NFPA speaker.	FL	$189
02-101225	Freightliner West Coast heated cab mirrors with remote control. Includes bright finish.	FL	$272
02-101226	Two (2) hood-mounted OEM air horns with driver and officer mounted foot switches.		$517
02-101227	Driver Control Differential for M2.	FL	$571
02-101230	Freightliner aluminum wheels.	FL	$1,327
02-101235	Interior and exterior NFPA cab lighting package for (4) dr chassis. Consists of (4) incandescent interior and (4) incandescent under cab lights.	FL	$153
02-101236	Chassis prep for stock chassis. Includes ajustments to wheelbase and afterframe to overall unit configuration requirements.	FL/INT	$3,198
02-101246	M2 (2) door, 202" WB & 47" frame cut, front tow hooks, 12K & 23K axles, ABS brakes, 1100 sq.in. radiator, 50 gal. left hand fuel tank, EVS3000 transmission, (2) 1850CCA batteries, 270 alternator, ember separator and AC.	FL	$304
02-101247	M2 (2) door, 214" WB & 47" frame cut, front tow hooks, 12K & 23K axles, ABS brakes, 1100 sq.in. radiator, 50 gal. left hand fuel tank, EVS3000 transmission, (2) 1850CCA batteries, 270 alternator, ember separator and AC.	FL	$873
02-101248	M2 (4) door, 226" WB, 47" frame cut, front tow hooks, 12K & 23K axles, ABS brakes, 1100 sq. in. radiator, 50 gal. LH fuel tank, EVS3000 trans., (2) 1850 CCA batteries, 270 alternator, ember separator and AC.	FL	$11,202
02-101249	M2 (4) door, 248" WB, 47" frame cut, front tow hooks, 12K & 23K axles, ABS brakes, 1100 sq. in. radiator, 50 gal. LH fuel tank, EVS3000 trans., (2) 1850 CCA batteries, 270 alternator, ember separator and AC.	FL	$11,341
02-101250	M2 (4) door, 260" WB, 47" frame cut, front tow hooks, 12K & 23K axles, ABS brakes, 1100 sq. in. radiator, 50 gal. LH fuel tank, EVS3000 trans., (2) 1850 CCA batteries, 270 alternator, ember separator and AC.	FL	$11,341
02-101251	M2 (4) door, 226" WB, 47" frame cut, front tow hooks, 12K & 26K axles, ABS brakes, 1100 sq. in. radiator, 50 gal. LH fuel tank, EVS3000 trans., (2) 1850 CCA batteries, 270 alternator, ember separator and AC.	FL	$15,112
02-101252	M2 (4) door, 248" WB, 47" frame cut, front tow hooks, 12K & 26K axles, ABS brakes, 1100 sq. in. radiator, 50 gal. LH fuel tank, EVS3000 trans., (2) 1850 CCA batteries, 270 alternator, ember separator and AC.	FL	$15,268
02-101253	M2 (4) door, 260" WB, 47" frame cut, front tow hooks, 12K & 26K axles, ABS brakes, 1100 sq. in. radiator, 50 gal. LH fuel tank, EVS3000 trans., (2) 1850 CCA batteries, 270 alternator, ember separator and AC.	FL	$15,250
02-101255	Cummins ISC 330 HP engine.	FL	$2,171

02-101256	Cummins ISC 330 HP engine with Cummins C-Brake Engine Compression Brake.	FL	$4,011
02-101257	Diamond plate trim package for a (4) door International. Includes a full length driver side and a (2) piece officer side trim that will utilze pieces already supplied by the OEM.	INT	$1,951
02-101258	International 4400 (2) door, 181" WB & 47" frame cut, front tow hooks, 12K & 23K axles, ABS brakes, 816 sq. in. radiator, 50 gal. right hand fuel tank, EVS3000 transmission, (3) 1950CCA batteries, 320 alternator, ember separator and AC.	INT	$5,286
02-101259	International 4400 (2) door, 203" WB & 47" frame cut, front tow hooks, 12K & 23K axles, ABS brakes, 816 sq. in. radiator, 50 gal. right hand fuel tank, EVS3000 transmission, (3) 1950CCA batteries, 320 alternator, ember separator and AC.	INT	$5,286
02-101260	International 4400 (2) door, 215" WB & 47" frame cut, front tow hooks, 12K & 23K axles, ABS brakes, 816 sq. in. radiator, 50 gal. right hand fuel tank, EVS3000 transmission, (3) 1950CCA batteries, 320 alternator, ember separator and AC.	INT	$5,286
02-101261	International 4400 (4) door, 226" WB & 47" frame cut, front tow hooks, 12K & 26K axles, ABS brakes, 816 sq. in. radiator, 50 gal. right hand fuel tank, EVS3000 transmission, (3) 1950CCA batteries, 320 alternator, ember separator and AC.	INT	$17,625
02-101262	International 4400 (4) door, 248" WB & 47" frame cut, front tow hooks, 12K & 26K axles, ABS brakes, 816 sq. in. radiator, 50 gal. right hand fuel tank, EVS3000 transmission, (3) 1950CCA batteries, 320 alternator, ember separator and AC.	INT	$17,625
02-101263	International 4400 (4) door, 260" WB & 47" frame cut, front tow hooks, 12K & 26K axles, ABS brakes, 816 sq. in. radiator, 50 gal. right hand fuel tank, EVS3000 transmission, (3) 1950CCA batteries, 320 alternator, ember separator and AC.	INT	$17,807
02-101264	International 4400 (4) door, 226" WB & 47" frame cut, front tow hooks, 12K & 23K axles, ABS brakes, 816 sq. in. radiator, 50 gal. right hand fuel tank, EVS3000 transmission, (3) 1950CCA batteries, 320 alternator, ember separator and AC.	INT	$14,255
02-101265	International 4400 (4) door, 248" WB & 47" frame cut, front tow hooks, 12K & 23K axles, ABS brakes, 816 sq. in. radiator, 50 gal. right hand fuel tank, EVS3000 transmission, (3) 1950CCA batteries, 320 alternator, ember separator and AC.	INT	$14,255
02-101266	International 4400 (4) door, 260" WB & 47" frame cut, front tow hooks, 12K & 23K axles, ABS brakes, 816 sq. in. radiator, 50 gal. right hand fuel tank, EVS3000 transmission, (3) 1950CCA batteries, 320 alternator, ember separator and AC.	INT	$14,438
02-101267	Diamond plate trim package for a (2) door International. Includes a full length driver side and an officer side trim that will utilze pieces already supplied by the OEM.	INT	$1,291
02-101269	International Maxx Force DT570 310 HP engine. Includes Diamond Logix Exhaust and Engine Compression Brake.	INT	$1,158
02-101270	International Maxx Force 330 HP engine.	INT	$228
02-101271	International Maxx Force DT570 330 HP engine. Includes Diamond Logix Exhaust and Engine Compression Brake.	INT	$1,387
02-101272	Two (2) hood-mounted OEM air horns with driver and officer mounted foot switches.	INT	$813
02-101276	Chassis Prep International 4400 Maxx Force engine. Includes exhaust extension, rear tow eyes, high idle, master light switch, master battery switch, air inlet and battery charger receptacle.	INT	$380
02-101278	International aluminum wheels.	INT	$1,340
02-101280	Seating Package Two (2) Door International. Includes One (1) Nat'l Brand Air Ride Driver and One (1) Nat'l Brand Air Ride Officer (Non-SCBA).	INT	$133
02-101282	Cab paint two tone. Upper FLNA 3225 red / lower FLNA 4006 white. International.	INT	$760
02-101283	Interior and exterior NFPA cab lighting package for (4) dr chassis (International). Consists of (4) incandescent interior and (4) incandescent under cab lights.	INT	$153
02-101285	Engine block heater. Locate receptacle below the driver side cab door. International	INT	$193
02-101288	Philips 1000 watt engine block heater. Locate receptacle below the driver side cab door. Freightliner.	FL	$131
02-101292	Interior and exterior NFPA cab lighting package for (4) dr chassis. Consists of (4) incandescent interior and (4) incandescent under cab lights.	FL	$153
02-101294	Interior and exterior NFPA cab lighting package for (4) dr chassis. Consists of (4) incandescent interior and (4) incandescent under cab lights.	INT	$153
02-101315	Chassis prep for International with DT530 Engine.	INT	$759
02-101337	Paint cab two-tone. LowerDuPont L2450EG Red/UpperDuPont L0006EG White.	FL	$2,347
02-101338	Paint cab two-tone. LowerDuPont L2452EG Red/UpperDuPont L0006EG White.	FL	$2,347
02-101339	Paint cab two-tone. LowerDuPont L2451EG Red/UpperDuPont L0006EG White.	FL	$2,347
02-101340	Paint cab two-tone. LowerDuPont L2454EG Lime Green/UpperDuPont L0006EG White.	FL	$2,347
02-101341	Paint cab two-tone. LowerDuPont L2518EG Lime Green/UpperDuPont L0006EG White.	FL	$2,347
02-101342	Paint cab two-tone. LowerDuPont L2519EG Lime Green/UpperDuPont L0006EG White.	FL	$2,347
02-101343	Paint cab two-tone. Lower DuPont 766710EG Yellow/ Upper DuPont L0006EG White.	FL	$2,347
02-101344	Paint cab two-tone. LowerDuPont P2450EG Red/UpperDuPont 767181EG Black.	FL	$2,347
02-101345	Paint cab two-tone. LowerDuPont P2452EG Red/UpperDuPont 767181EG Black.	FL	$2,347
02-101346	Paint cab two-tone. LowerDuPont P2451EG Red/UpperDuPont 767181EG Black.	FL	$2,347
02-101347	Paint cab two-tone. LowerDuPont L6752EG Red/UpperDuPont 767181EG Black.	FL	$2,347
02-101348	Paint cab two-tone. LowerDuPont L6636EG Red/UpperDuPont 767181EG Black.	FL	$2,347
02-101349	Paint cab two-tone. LowerDuPont P2454EG Lime Green/UpperDuPont 767181EG Black.	FL	$2,347
02-101350	Paint cab two-tone. LowerDuPont P2518EG Lime Green/UpperDuPont 767181EG Black.	FL	$2,347
02-101351	Paint cab two-tone. LowerDuPont P2519EG Lime Green/UpperDuPont 767181EG Black.	FL	$2,347
02-101352	Paint cab two-tone. Lower DuPont 766710EG Yellow/ Upper DuPont 767181EG Black.	FL	$2,347
02-101353	Paint cab two-tone. Lower DuPont 766281EG Yellow/ Upper DuPont 767181EG Black.	FL	$2,347
02-101360	Cab paint two tone. Upper FLNA 4006 White / lower FLNA 3047 Red. International.	INT	$760
02-101361	Cab paint two tone. Upper FLNA 4006 White / lower FLNA 3035 Red. International.	INT	$760
02-101362	Cab paint two tone. Upper FLNA 4006 White / lower FLNA 3221 Red. International.	INT	$760
02-101363	Cab paint two tone. Upper FLNA 4006 White / lower FLNA 6257 Lime Green. International.	INT	$760

02-101364	Cab paint two tone. Upper FLNA 4006 White / lower FLNA 6051 Lime Green. International.	INT	$760
02-101365	Cab paint two tone. Upper FLNA 4006 White / lower FLNA 6074 Lime Green. International.	INT	$760
02-101366	Cab paint two tone. Upper FLNA 4006 White / lower FLNA 1218 Yellow. International.	INT	$760
02-101367	Cab paint two tone. Upper FLNA 4145 Black / lower FLNA 3035 Red. International.	INT	$760
02-101368	Cab paint two tone. Upper FLNA 4145 Black / lower FLNA 3035 Red. International.	INT	$760
02-101369	Cab paint two tone. Upper FLNA 4145 Black / lower FLNA 3221 Red. International.	INT	$760
02-101370	Cab paint two tone. Upper FLNA 4145 Black / lower FLNA 3225 Red. International.	INT	$760
02-101371	Cab paint two tone. Upper FLNA 4145 Black / lower FLNA 3204 Red. International.	INT	$760
02-101372	Cab paint two tone. Upper FLNA 4145 Black / lower FLNA 6257 Lime Green. International.	INT	$760
02-101373	Cab paint two tone. Upper FLNA 4145 Black / lower FLNA 6051 Lime Green. International.	INT	$760
02-101374	Cab paint two tone. Upper FLNA 4145 Black / lower FLNA 6074 Lime Green. International.	INT	$760
02-101375	Cab paint two tone. Upper FLNA 4145 Black / lower FLNA 1218 Yellow. International.	INT	$760
02-101376	Cab paint two tone. Upper FLNA 4145 Black / lower FLNA 1219 Yellow. International.	INT	$760
02-101378	M2 (2) door, 210" WB & 47" frame cut, front tow hooks, 12K & 24K axles, ABS brakes, 1100 sq.in. radiator, 50 gal. left hand fuel tank, EVS3000 transmission, (2) 1850CCA batteries, 270 alternator, ember separator and AC.	FL	$517
02-101379	M2 (2) door, 222" WB & 47" frame cut, front tow hooks, 12K & 24K axles, ABS brakes, 1100 sq.in. radiator, 50 gal. left hand fuel tank, EVS3000 transmission, (2) 1850CCA batteries, 270 alternator, ember separator and AC.	FL	$524
02-101383	M2 (4) door, 236" WB, 47" frame cut, front tow hooks, 12K & 24K axles, ABS brakes, 1100 sq. in. radiator, 50 gal. LH fuel tank, EVS3000 trans., (2) 1850 CCA batteries, 270 alternator, ember separator and AC.	FL	$7,124
02-101385	M2 (4) door, 256" WB, 47" frame cut, front tow hooks, 12K & 24K axles, ABS brakes, 1100 sq. in. radiator, 50 gal. LH fuel tank, EVS3000 trans., (2) 1850 CCA batteries, 270 alternator, ember separator and AC.	FL	$7,169
02-101387	M2 (4) door, 270" WB, 47" frame cut, front tow hooks, 12K & 24K axles, ABS brakes, 1100 sq. in. radiator, 50 gal. LH fuel tank, EVS3000 trans., (2) 1850 CCA batteries, 270 alternator, ember separator and AC.	FL	$7,169
02-101389	International 4400 (2) door, 189" WB & 47" frame cut, front tow hooks, 12K & 24K axles, ABS brakes, 816 sq. in. radiator, 50 gal. right hand fuel tank, EVS3000 transmission, (3) 1950CCA batteries, 320 alternator, ember separator and AC.	INT	$4,058
02-101391	International 4400 (2) door, 211" WB & 47" frame cut, front tow hooks, 12K & 24K axles, ABS brakes, 816 sq. in. radiator, 50 gal. right hand fuel tank, EVS3000 transmission, (3) 1950CCA batteries, 320 alternator, ember separator and AC.	INT	$4,244
02-101392	International 4400 (2) door, 224" WB & 47" frame cut, front tow hooks, 12K & 24K axles, ABS brakes, 816 sq. in. radiator, 50 gal. right hand fuel tank, EVS3000 transmission, (3) 1950CCA batteries, 320 alternator, ember separator and AC.	INT	$4,244
02-101395	International 4400 (4) door, 234" WB & 47" frame cut, front tow hooks, 14K & 24K axles, ABS brakes, 816 sq. in. radiator, 50 gal. right hand fuel tank, EVS3000 transmission, (3) 1950CCA batteries, 320 alternator, ember separator and AC.	INT	$12,880
02-101396	International 4400 (4) door, 256" WB & 47" frame cut, front tow hooks, 14K & 24K axles, ABS brakes, 816 sq. in. radiator, 50 gal. right hand fuel tank, EVS3000 transmission, (3) 1950CCA batteries, 320 alternator, ember separator and AC.	INT	$13,066
02-101397	International 4400 (4) door, 268" WB & 47" frame cut, front tow hooks, 14K & 24K axles, ABS brakes, 816 sq. in. radiator, 50 gal. right hand fuel tank, EVS3000 transmission, (3) 1950CCA batteries, 320 alternator, ember separator and AC.	INT	$13,066
02-101406	International Maxx Force DT570 330 HP engine. Includes Diamond Logix Exhaust Brake.For use with ES Pumper only.	INT	$1,988
02-101407	Cummins ISC 330 HP engine with exhaust brake. For use with ES Pumper only.	FL	$2,330
02-101409	Cummins ISC 300 HP engine with Cummins exhaust brake. For use with ES Pumper only.	FL	$158
02-101411	International 4400 Model Year and 2010 EPA Engine Surcharge.	INT	$6,600
02-101412	Freightliner Model Year and 2010 EPA Engine Surcharge.	FL	$9,130
02-101413	International 4400 (4) door, 234" WB & 47" frame cut, front tow hooks, 14K & 26K axles, ABS brakes, 816 sq. in. radiator, 50 gal. right hand fuel tank, EVS3000 transmission, (3) 1950CCA batteries, 320 alternator, ember separator and AC.	INT	$12,880
03	**BODY OPTIONS**		
03-119005	Smooth plate panels of body interior compartments to have zolatone (gray) finish.		$3,707
03-119013	Roll-out tray. Mount on driver side forward body compartment floor.		$572
03-119014	Roll-out tray. Mount on driver side rearward body compartment floor.		$629
03-119015	Roll-out tray. Mount on rear body compartment floor.		$572
03-119016	Roll-out tray. Mount on officer side forward body compartment floor.		$572
03-119017	Roll-out tray. Mount on officer side rearward body compartment floor.		$629
03-119019	Adjustable shelf. Location: Driver side forward body compartment.		$252
03-119020	Adjustable shelf. Location: Driver side rearward body compartment.		$289
03-119021	Adjustable shelf. Location: Officer side forward body compartment.		$252
03-119022	Adjustable shelf. Location: Officer side rearward body compartment.		$289
03-119026	Double hardsuction storage with NFPA compliant restraints. Locate over adjustable ladder brackets.		$574
03-119027	Double hardsuction storage with NFPA compliant restraints. Locate (1) officer side on ladder rack and (1) driver side on compartment top.		$574
03-119028	Double hardsuction storage with NFPA compliant restraints. Locate (1) officer side on ladder rack and (1) driver side on compartment top.		$574
03-119036	Long hosebed divider.		$365

03-119039	Five (5) folding steps- two (2) officer and three (3) driver side front compartment face. Includes two (2) handrails - one (1) officer side and one (1) driver side of pump module and (1) light up high on driver side compartment face.		$508
03-119040	Four (4) folding steps- one (1) officer and three (3) driver side front compartment face. Includes two (2) handrails - one (1) officer side and one (1) driver side of pump module and (1) light up high on driver side compartment face.		$396
03-119041	Six (6) folding steps- three (3) officer and three (3) driver side front compartment face. Includes two (2) handrails - one (1) officer side and one (1) driver side of pump module and (2) lights up high on front compartment faces.		$623
03-119042	Four (4) SCBA bottle storage. Located (2) each side in body wheel well area.		$655
03-119053	Main (structural) body rubrail package. Includes white scotchlite inserts.		$606
03-119058	Fixed shelf at upper area offset. Locate in forward and rearward full height compartments.		$174
03-119076	Adjustable shelf. Location: Driver side forward body compartment. For use with full height or lower full depth compartment.		$273
03-119078	Adjustable shelf. Location: Driver side rearward body compartment. For use with full height or lower full depth compartment.		$299
03-119079	Adjustable shelf. Location: Rear body compartment.		$273
03-119083	Adjustable shelf. Location: Officer side forward body compartment. For use with lower full depth compartment.		$273
03-119084	Adjustable shelf. Location: Officer side rearward body compartment. For use with lower full depth compartment.		$299
03-119102	Roll-out tray. Mount on driver side forward body compartment floor.		$593
03-119103	Roll-out tilt-down tray. Mount on driver side wheel well body compartment floor.		$794
03-119104	Roll-out tray. Mount on driver side rearward body compartment floor.		$639
03-119105	Roll-out tray. Mount on rear body compartment floor.		$593
03-119106	Roll-out tray. Mount on officer side forward body compartment floor.		$593
03-119107	Roll-out tray. Mount on officer side rearward body compartment floor.		$639
03-119108	Adjustable roll-out tray. Mount in driver side forward body compartment.		$866
03-119109	Adjustable roll-out tray. Mount in driver side rearward body compartment.		$938
03-119110	Adjustable roll-out tray. Mount in officer side forward body compartment.		$866
03-119111	Adjustable roll-out tray. Mount in officer side rearward body compartment.		$938
03-119112	Adjustable roll-out tray. Mount in rear body compartment.		$866
03-119113	Adjustable roll-out toolboard. Mount in driver side forward body compartment.		$364
03-119114	Adjustable roll-out toolboard. Mount in driver side rearward body compartment.		$364
03-119115	Roll-out tray. Mount on officer side forward body compartment floor. For use with urea tank.		$593
03-119116	Fixed shelf at compartment offset. Location: Driver side forward and rearward body compartments.		$205
03-119117	Fixed shelf at compartment offset. Location: Officer side forward and rearward body compartments.		$205
03-119120	Driver side storage tunnel to hold (2) 6" x 10' hard suction hoses.		$1,900
03-119121	Adjustable shelf. Location: Officer side forward body compartment. For use with lower full depth compartment and urea tank.		$273
03-119129	Long hosebed divider.		$383
03-119137	Long hosebed divider. For use with hosebed storage pan option.		$320
03-119145	Diamond plate single axle wheel well. Includes bolt-on composite wheel well, sanded fenderettes and mudflaps. Includes storage for (4) SCBA bottles - (2) driver side and (2) officer side.		$1,922
03-119146	Diamond plate single axle wheel well. Includes bolt-on composite wheel well, sanded fenderettes and mudflaps. Includes driver side recessed fuel fill and storage for (4) SCBA bottles - (2) driver side and (2) officer side.	Custom ES	$1,922
03-119147	Diamond plate single axle wheel well. Includes bolt-on composite wheel well, sanded fenderettes and mudflaps. Includes driver side recessed fuel fill and storage for (7) SCBA bottles - (3) driver side and (4) officer side.	Custom ES	$2,317
03-119148	Diamond plate single axle wheel well. Includes bolt-on composite wheel well, sanded fenderettes and mudflaps. Includes storage for (8) SCBA bottles - (4) driver side and (4) officer side.	Custom ES	$2,485
03-119150	Double hardsuction storage with NFPA compliant restraints. Locate (1) officer side on compartment top and (1) driver side on compartment top.		$574
03-119151	Main (structural) body rubrail package. Includes white scotchlite inserts.		$689
03-119152	Backboard storage. Storage for (1) backboard in officer side storage tunnel against hosebed side wall. Includes stop bracket.		$183
03-119164	Bolt-in partition for the urea tank in lower forward area of the officer side forward body compartment. Includes fixed shelf over the urea tank.		$68
03-119165	Bolt-in partition for the urea tank in lower forward area of the officer side forward body compartment. Includes fixed shelf over the urea tank.		$68
03-119167	Bolt-in partition for the urea tank in lower forward area of the officer side forward body compartment. Includes fixed shelf over the urea tank.		$68
04	**PUMP OPTIONS**		
04-103902	Mechanical Tachometer Counter Connection on the Driver Side Pump Panel.		$208
04-106177	Top mount pump module (25MF) with area for double stacked crosslays w/divider and driver and officer side pump access panels (hinged).		$2,021
04-106178	Top mount pump module (25MF) with area for double speedlays and driver and officer side pump access panels (hinged). Upper area behind TM includes panel cover.		$3,012
04-106189	Hale QMAX pump.		$4,716
04-106196	3" officer side discharge (forward of steamer) with NFPA droop with cap. Includes 2.5" pressure gauge on pump operator panel.		$471
04-106198	1.5" front bumper discharge. Locate discharge in bumper hose storage tray (outboard side wall) down low. Includes 2.5" pressure gauge on pump operator panel.		$4,402

04-106217	Booster Reel. Locate reel in B1 compartment. Includes 200' of 1" hose, air blow-out and body mounted rewind switch.	$3,925
04-106218	2.5" Officer Rear Tank Inlet. Includes Water Level Gauge.	$919
04-106219	Hale 2.1A Foam System. Provides foam for up to (4) discharges: 1.5" Double Crosslay or Speedlay (as applicable), and the following discharges if optioned: 1.5" Frt Bumper and Booster Reel.	$5,201
04-106220	Dealer installed foam system. Final manifold/discharge configuration to be defined by foam system application installed at/by dealer.	$1,323
04-106223	Top mount pump module (23MF) with area for double stacked crosslays w/divider and driver and officer side pump access panels (hinged).	$2,021
04-106224	Top mount pump module (23MF) with area for double speedlays and driver and officer side pump access panels (hinged). Upper area behind TM includes panel cover.	$3,012
04-106225	Auxilary 2.5" Officer Side Panel Intake. Includes officer side panel controller.	$921
04-106228	Hale 2.1A Foam System. Provides foam for up to (4) discharges: 1.5" Double Crosslay or Speedlay (as applicable), and the following discharges if optioned: 1.5" Frt Bumper and Booster Reel.	$5,304
04-106232	Rear tank dump. Includes painted steel assembly with manually actuated valve on driver side of dump assembly and integral manual extension chute.	$2,747
04-106233	Rear tank dump. Includes painted steel assembly with manually actuated valve on driver side and manual slip-on chute. Includes painted steel slip-on elbow and extension with support bracket (all shipped loose).	$3,355
04-106238	3" officer side discharge (forward of steamer) with NFPA droop with cap. For use with Side Mount Pump Module.	$471
04-106239	3" officer side discharge (forward of steamer) with NFPA droop with cap. For use with Top Mount Pump Module.	$471
04-106240	1.5" front bumper discharge. Locate discharge in bumper hose storage tray (outboard side wall) down low. For use with Side Mount Pump Module.	$4,402
04-106241	1.5" front bumper discharge. Locate discharge in bumper hose storage tray (outboard side wall) down low. For use with Top Mount Pump Module.	$4,402
04-106242	Hale 2.1A Foam System. Provides foam for up to (4) discharges: 1.5" Double Crosslay or Speedlay (as applicable), and the following discharges if optioned: 1.5" Frt Bumper and Booster Reel.	$5,304
04-106252	Booster Reel with air actuated operator panel control. Locate reel in B1 compartment. Includes 200' of 1" hose, air blow-out and officer side body mounted rewind switch (below warning label).	$4,024
04-106253	Auxilary 2.5" Officer Side Panel Intake. Includes officer side panel controller.	$921
04-106257	Top mount walkway for use with a 23" mainframe. Includes diamond plate walkway, side runningboards and walkway access steps.	$2,021
04-106265	Top mount walkway for use with a 25" mainframe. Includes diamond plate walkway, side runningboards and walkway access steps.	$2,021
04-106266	Speedlay module behind cab with area for (2) side by side preconnects with (1) center divider and runningboards. Includes (2) handrails with offset stanchions mounted (1) each side of module for use with walkway access steps.	$991
04-106268	Pump gear box to be 21L. For use with 1500 gpm QMAX pump.	$4,716
04-106269	Speedlay module behind cab with area for (2) side by side preconnects with (1) center divider and runningboards. Includes (2) handrails with offset stanchions mounted (1) each side of module for use with walkway access steps.	$991
04-106276	Pump gear box to be 21XL. For use with 1500 gpm QMAX pump.	$4,716
04-106278	Front bumper discharge - 1.5" manual control. For use with a side mount pump module with crosslays. Locate discharge in hose storage tray down low. Custom ES.	$1,235
04-106279	Front bumper discharge - 1.5" manual control. For use with a top mount pump module with crosslays. Locate discharge in hose storage tray down low. Custom ES.	$1,298
04-106280	Front bumper discharge - 1.5" manual control. For use with a top mount pump module with speedlays. Locate discharge in hose storage tray down low. Custom ES.	$1,298
04-106282	Pump gear box to be 21L. For use with 1500 gpm Hale QMAX pump. Includes officer side lower port with MIV-E valve for use with an auxiliary large intake.	$4,716
04-106284	Pump gear box to be 21X. For use with 1500 gpm Hale QMAX pump. Includes officer side lower port for use with an auxiliary large intake.	$4,716
04-106285	5" Front Intake with 6" front swivel located on officer side front bumper.	$9,739
04-106288	Top mount walkway for use with a 23" mainframe and speedlay module. Includes diamond plate walkway, side runningboards and walkway access steps.	$2,021
04-106289	Top mount walkway for use with a 25" mainframe and speedlay module. Includes diamond plate walkway, side runningboards and walkway access steps.	$2,021
04-106292	5" Front Intake with 6" front swivel located on officer side front bumper. 2010 EPA Custom ES.	$9,739
05	**ELECTRICAL OPTIONS**	
05-109116	Whelen Freedom model FN66QLED 66" with MKEZ7 mounts. All LED (forward facing) light bar.	$662
05-109121	Generator Package. Includes 5kw portable gas generator, (2) 20AMP TL receptacles. One each side on rear compartment face, (2) 500W quartz lights with internal pole on the pump module and (6) place breaker box with master breaker forward wall L1.	$7,851
05-109122	Generator Package. Includes (2) 20AMP TL receptacles. One each side on rear compartment face, (2) 500W quartz lights with internal pole on the pump module and (6) place breaker box (master breaker to be installed by dealer with size of generator to be determined by dealer) forward wall L1.	$4,122
05-109127	Federal NightFighter (PR) with internal pole. Pump module mounted.	$2,377
05-109143	Whelen Justice model JE2NFPA 56" with MKEZ7 mounts. All LED (forward facing) light bar.	$662
05-109148	Multiplex data logger. Custom ES.	$354
05-109149	Modem for use with the E-ONE multiplex electrical system. Custom ES.	$597
05-109151	Whelen Freedom light bar model FN66QLED 66" LED with clear domes. Custom ES. Location: Centered on the front cab roof.	$887

05-109155	Q2B mechanical pedestal mounted siren. Located on the driver side of the bumper extension. Requires 20" bumper ext. Includes (2) foot switches- (1) driver and (1) officer side and an electric siren brake switch located on the switch panel. Custom ES.		$2,266
05-109156	Federal GH scene lights (PR) located up high above front cab door handrails. Lights shall be switched separately from the drivers switch panel.		$442
05-109157	Light spot hand held Specialty 2150 hardwired on officer side. Custom ES.		$261
05-109158	12V Outlet on officer side in cab. Custom ES.		$80
05-109161	Electric reel with 200' 10/3 black. Back wall mounted in driver side rearward body compartment in upper area offset rearward. Includes reel mounted rollers and rewind switch. For use with dealer/E-ONE installed generator only.		$1,803
05-109162	Electric reel with 200' 10/3 black. Ceiling mounted in driver side rearward body compartment in lower area offset rearward. Includes reel mounted rollers and rewind switch. For use with dealer/E-ONE installed generator only.		$1,803
05-109163	Electric reel with 200' 10/3 black. Ceiling mounted in officer side rearward body compartment in lower area offset rearward. Includes reel mounted rollers and rewind switch. For use with dealer/E-ONE installed generator only.		$1,803
05-109164	Generator Package. Includes 5kw portable gas generator located in the officer side hosebed storage pan, (2) 20AMP TL receptacles, one each side on rear compartment face, (2) 500W quartz lights with internal pole on the pump module and (6) place breaker box with master breaker forward wall L1.		$8,011
05-109165	Generator Prewire Package. Includes (2) 20AMP TL receptacles, one each side on rear compartment face, (2) 500W quartz lights with internal pole on the pump module and (6) place breaker box (master breaker to be installed by dealer with size of generator to be determined by dealer) forward wall L1.		$4,236
05-109166	Generator Package. Includes 8kw hydraulic generator located in the officer side hosebed storage pan, (2) 20AMP TL receptacles, one each side on rear compartment face, (2) 500W quartz lights with internal pole on the pump module and (6) place breaker box with master breaker forward wall L1. Includes generator control / PTO engage switch and a gauge panel located adjacent to breaker box.		$15,470
05-109167	Generator Prewire Package. Includes (2) 20AMP TL receptacles, one each side on rear compartment face, (2) 500W quartz lights with internal pole on the pump module and (6) place breaker box (master breaker and PTO to be installed by dealer with size of generator to be determined by dealer) forward wall L1.		$4,319
05-109168	Light bar Federal Signal Signal Master SMLED6. Directional light bar control is to be located in the center overhead console offset to driver side. Includes recessed box for traffic advisor. For use with Custom Chassis.		$779
05-109169	Light bar Federal Signal Signal Master SMLED6. Directional light bar control is to be located in the officer side of center dash electrical cover. Includes recessed box for traffic advisor. For use with Freightliner Chassis.		$831
05-109170	Light bar Federal Signal Signal Master SMLED6. Directional light bar control is to be located on bail bracket below overhead console. Includes recessed box for traffic advisor. For use with International Chassis.		$831
05-109171	Whelen Traffic Advisor Model TAL65 LED. Directional light bar control is to be located in the center overhead console offset to driver side. Includes recessed box for traffic advisor. For use with Custom Chassis.		$1,533
05-109172	Whelen Traffic Advisor Model TAL65 LED. Directional light bar control is to be located in the officer side of center dash electrical cover. Includes recessed box for traffic advisor. For use with Freightliner Chassis.		$1,603
05-109173	Whelen Traffic Advisor Model TAL65 LED. Directional light bar control is to be located on bail bracket below overhead console. Includes recessed box for traffic advisor. For use with International Chassis.		$1,603
07-101184	Ladder & Equipment Package. Includes: Alco-Lite PEL24, PRL14, FL10 w/feet, (1) 6' and (1) 10' pike pole, (2) 6"x10' hard suction hoses, (2) axes w/mntng brkts (ship loose) and (1) 6" strainer (ship loose).		$3,836
07-101185	HeartStart OnSite Automated External Defibrillator. Unmounted.		$1,731
07-101186	HeartStart OnSite Automated External Defibrillator. Ship loose unmounted.		$1,769
07-101189	Ladder & Equipment Package. Includes: Duo-Safety 900-A 24', 775-A 14, 585-A 10' w/feet, (1) 6' and (1) 10' pike pole, (2) 6"x10' hard suction hoses, (2) axes w/mntng brkts (ship loose) and (1) 6" strainer (ship loose).		$3,836
08	**PAINT, LETTERING, STRIPING**		
08-100061	3" Scotchlite Letters (60).		$1,059
08-100559	4" White Scotchlite stripe. Locate low on cab and body.		$850
08-100560	4" red Scotchlite stripe. Locate low on cab and body.		$850
08-101408	Paint cab sikkens two tone. Upper FLNA 4006 white and lower FLNA 3204 red. Requires paint break. Custom ES.	Custom ES	$1,010
08-101409	Paint Cab Sikkens two tone. Upper FLNA 4006 White and Lower FLNA 3225 Red. Requires paint break. Custom ES.	Custom ES	$1,010
08-101410	Paint Cab Sikkens two tone. Upper FLNA 4145 Black and Lower FLNA 3204 Red. Requires paint break. Custom ES.	Custom ES	$1,010
08-101411	Paint Cab Sikkens two tone. Upper FLNA 4145 Black and Lower FLNA 3225 Red. Requires paint break. Custom ES.	Custom ES	$1,010
08-101413	4" White Scotchlite stripe. Locate bottom of stripe even with top of bumper and straight back on body. Custom ES.	Custom ES	$850
08-101414	4" Red Scotchlite stripe. Locate bottom of stripe even with top of bumper and straight back on body. Custom ES.	Custom ES	$850

08-101416	4" Red Scotchlite stripe. Locate low on cab and body.		$850
08-101417	4" Black Scotchlite stripe. Locate low on cab and body.		$850
08-101418	4" Gold Scotchlite stripe. Locate low on cab and body.		$850
08-101432	Paint Cab Sikkens two tone. Upper FLNA 4006 White and Lower FLNA 3047 Red. Requires paint break. Custom ES.	Custom ES	$1,010
08-101433	Paint Cab Sikkens two tone. Upper FLNA 4006 White and Lower FLNA 3035 Red. Requires paint break. Custom ES.	Custom ES	$1,010
08-101434	Paint Cab Sikkens two tone. Upper FLNA 4006 White and Lower FLNA 3221 Red. Requires paint break. Custom ES.	Custom ES	$1,010
08-101435	Paint Cab Sikkens two tone. Upper FLNA 4006 White and Lower FLNA 6257 Lime Green. Requires paint break. Custom ES.	Custom ES	$1,010
08-101436	Paint Cab Sikkens two tone. Upper FLNA 4006 White and Lower FLNA 6051 Lime Green. Requires paint break. Custom ES.	Custom ES	$1,010
08-101437	Paint Cab Sikkens two tone. Upper FLNA 4006 White and Lower FLNA 6074 Lime Green. Requires paint break. Custom ES.	Custom ES	$1,010
08-101438	Paint Cab Sikkens two tone. Upper FLNA 4006 White and Lower FLNA 1218 Yellow. Requires paint break. Custom ES.	Custom ES	$1,010
08-101439	Paint Cab Sikkens two tone. Upper FLNA 4006 White and Lower FLNA 1219 Yellow. Requires paint break. Custom ES.	Custom ES	$1,010
08-101440	Paint Cab Sikkens two tone. Upper FLNA 4145 Black and Lower FLNA 3047 Red. Requires paint break. Custom ES.	Custom ES	$1,010
08-101441	Paint Cab Sikkens two tone. Upper FLNA 4145 Black and Lower FLNA 3035 Red. Requires paint break. Custom ES.	Custom ES	$1,010
08-101442	Paint Cab Sikkens two tone. Upper FLNA 4145 Black and Lower FLNA 3221 Red. Requires paint break. Custom ES.	Custom ES	$1,010
08-101443	Paint Cab Sikkens two tone. Upper FLNA 4145 Black and Lower FLNA 6257 Lime Green. Requires paint break. Custom ES.	Custom ES	$1,010
08-101444	Paint Cab Sikkens two tone. Upper FLNA 4145 Black and Lower FLNA 6051 Lime Green. Requires paint break. Custom ES.	Custom ES	$1,010
08-101445	Paint Cab Sikkens two tone. Upper FLNA 4145 Black and Lower FLNA 6074 Lime Green. Requires paint break. Custom ES.	Custom ES	$1,010
08-101446	Paint Cab Sikkens two tone. Upper FLNA 4145 Black and Lower FLNA 1218 Yellow. Requires paint break. Custom ES.	Custom ES	$1,010
08-101447	Paint Cab Sikkens two tone. Upper FLNA 4145 Black and Lower FLNA 1219 Yellow. Requires paint break. Custom ES.	Custom ES	$1,010
08-101448	4" Black Scotchlite stripe. Locate bottom of stripe even with top of bumper and straight back on body. Custom ES.	Custom ES	$850
08-101449	4" Gold Scotchlite stripe. Locate bottom of stripe even with top of bumper and straight back on body. Custom ES.	Custom ES	$850

Notes:

1) Availability of options are limited by other options selected, and not all options are available in every chassis/apparatus configuration. Selection of an option may require several of the above parts/items to complete the option package.

2) Certain options, alone or in combination with other options, may require heavier axle/suspension packages, longer frames, or reinforced frames at additional cost per the above price list.

3) To configure options, the E-One State Term Schedule authorized dealer will use quote configuration software to select the components necessary to effect the option, feature, or configuration requested and quote the total option price.

Fire Apparatus Quotation for:
STATE OF OHIO TERM SCHEDULE

Quotation Number: 35817 Rev: 20

Unit Description: TDPM-COMM

Quote Description: Tradition Pumper Commercial – Freightliner M2 2dr

Salesperson:

Salescode	Extended Description	Qty	
TESTING COMPLIANCE STANDARD			
1001-0015	The E-ONE supplied components of the vehicle shall meet the requirements of NFPA 1901, 2009 edition.	1	
CHASSIS MODEL			
1005-0108	M2 (2) door, 184" WB & 41" frame cut, front tow hooks, 12K & 23K axles, ABS brakes, 1100 sq.in. radiator, 50 gal. left hand fuel tank, EVS3000 transmission, (2) 1850CCA batteries, 270 alternator, ember separator, AC. 294-046 Separate taillight programming.	1	
CHASSIS PREP			
1020-0010	Comm Chas Prep E-1 Supp-FL	1	
WHEEL OPTIONS			
1050-0034	Freightliner chassis rims painted job color. Tradition.	1	
TIRE OPTIONS			
1060-0050	Tire pressure monitoring valve stem caps.	1	
AIR SYSTEM OPTIONS			
1110-0010-277	Air inlet. To charge brake system. Commercial chassis only. Location: driver's door step area	1	
1110-0060	Dual Grover Hood Mounted Air Horns with Driver and Officer Foot Switches to be Supplied and Installed by Freightliner. Tradition	1	
ENGINES & TRANSMISSIONS			
1200-0110	Freightliner Cummins ISC 330 HP engine.	1	
1200-0126	Chassis speed to be electronically limited and not to exceed a maximum of 68 MPH. Note: Speed rating may be lower based off OEM tire ratings provided on chassis.	1	
1200-0130	Turbo exhaust brake. Provided by the chassis OEM.	1	

Salescode	Extended Description	Qty	
CHASSIS OPTIONS			
1680-0011	Tow eyes rear below body painted	1	
1680-0078	Tow Hooks Front. Not available with extended front bumper. Tow hooks are OEM supplied with chassis	1	
1680-0110	Chassis Trim Package for a (2) door Freightliner.	1	
1680-0112	Freightliner commodity surcharge	1	
1680-0152	Freightliner Model Year and 2010 EPA Engine Surcharge.	1	
CAB BADGE PACKAGE			
1610-0000	Cab and body to have applicable E-ONE logos.	1	
MIRRORS			
1670-0034	Freightliner West Coast heated cab mirrors with remote control. Tradition.	1	
MISC EXTERIOR CAB OPTIONS			
1675-0007	Diesel fuel only label	1	
SEATS			
1510-0139	Seating Package Two (2) Door Freightliner. Includes One (1) Seats Inc 911 Universa Hi-Back Air Ride Driver and a Two (2) Person Bench Seat.	1	
1685-0030	Seating capacity tag of three occupants.	1	
CAB ELECTRICAL OPTIONS			
1750-0019	Battery charger Super Smart 110 volt, 20 amp.	1	
1750-0059-277-04	Receptacle inlet 20amp with a Yellow cover. Location: driver's door step area	1	
BODY COMPT LEFT SIDE			
3100-0095	Driver side body with full height 36" wide forward and 36" wide rearward compartmentation. Includes (1) 56" wide compartment over the wheel well.	1	
BODY COMPT RIGHT SIDE			
3120-0004	Officer half side body with 36" wide forward and 36" wide rearward compartmentation. Includes adjustable ladder tracks.	1	
BODY COMPT REAR			
3110-0005	Full Height Rear Compartment. Includes smooth plate panels.	1	
3340-0080	Bolt-on diamond plate 18" tailboard (full width of body). Includes (2) squared off beavertails (no stanchions) with removable outer panels and handrails- (2) vertically on trailing edge of body and horizontally mounted handrail(s) below hosebed.	1	

Salescode	Extended Description	Qty	
DOORS			
3300-0008-015	Door double vertically hinged painted. Location(s): R1	1	
3300-0008-016	Door double vertically hinged painted. Location(s): R2	1	
3300-0011-004	Door single horizontally hinged lift-up painted. Location(s): L2	1	
3300-0019-027	Door roll up tall (greater than 45") with satin finish ROM. Location(s): B1	1	
3300-0030-003	Door double 3-point vertically hinged painted. Location(s): L1	1	
3300-0030-005	Door double 3-point vertically hinged painted. Location(s): L3	1	
SHELVES			
3370-0025-099	Permanent shelf. Locate in L1 at offset (above extrusion if applicable).	1	
3370-0025-100	Permanent shelf. Locate in L3 at offset (above extrusion if applicable).	1	
COVERS			
3305-0007-000-02	Vinyl Red hosebed cover with attached rear flap(s).	1	
3305-0008-000-02	Vinyl Red crosslay cover with attached side flaps.	1	
PUMP MODULE			
3130-0166	Pump Module to be 72" wide (side to side). Includes upper, lower, crosswalk, speedlay and tranverse module(s) if applicable.	1	
3130-0192	Side Mount Pump Module. Includes area for single stacked double crosslay (notched divider).	1	
PUMP PANELS			
3134-0011	Officer side pump panel to be vertically hinged on forward extrusion. Panel(s) to be secured in the closed position with push button latches. Upper panel to be held open with gas shock.	1	
3134-0016	Stainless steel driver and officer side pump panels.	1	
3134-0050	The gauge panel is to swing downward/forward for access to electrical connections on panel. Includes two (2) cable hold opens, and push button latches.	1	
MISC PUMP PANEL OPTIONS			
4460-0003	Pump Panel Tags Color Coded per NFPA Compliance	1	
PUMP MODULE OPTIONS			
3136-0038	Module mainframe for use with M2 chassis with 23,000 rear axle.	1	
WATER TANK			
4010-0018	1030 Gallon "T" Water Tank. Note: Any foam cell(s) and/or storage options thru the tank will reduce the overall water capacity. Tank capacity is 1030 US gallons / 857	1	

Salescode	Extended Description	Qty	
WATER TANK			
	Imperial gallons / 3898 Liters.		
TANK PLUMBING			
4450-0010	2" Tank Fill Akron Manual Valve	1	
4450-0119	3" Tank To Pump Akron Manual Valve w/4" Plumbing	1	
LADDER STORAGE / RACKS			
3365-0018	Hold down brackets to secure a (2) section extension and roof ladder.	1	
3365-0025-515	Attic ladder mounting brackets (PR). Locate officer side compartment top.	1	
3365-0028	Hard Suction Storage Rack. Driver side compartment top. Includes spring hold downs and scuff plates behind spring mounts (as applicable).	1	
3365-0031	Hard Suction Storage Rack. Officer side in adjustable track above ladders. Includes spring hold downs and scuff plates.	1	
3365-0034-515	(2) pike pole storage tubes. Locate officer side compartment top.	1	
3365-0049	Brand of ladders capable of being carried on unit to be Alco-Lite.	1	
3365-0086-B99	The length of pike pole(s) capable of being stored to be the following length: (2) 10' pike poles.	1	
3365-0087-C57	The length of ladder(s) capable of being stored to be the following length: 24' 2-Section and 14' roof ladder.	1	
3365-0168	Pike pole tube secondary retaining pin(s) with cable. Locate on end of pike pole tube(s).	1	
HANDRAILS / STEPS			
3330-0053-060	Folding Step. Location officer side front compartment face. Step include integral lights. Each location requires a minimum of (1) handrail per NFPA.	1	
3330-0053-062	Folding Step. Location driver side front compartment face. Step include integral lights. Each location requires a minimum of (1) handrail per NFPA.	3	
3330-0054	Steps rear NFPA. Steps include integral lights. Includes folding steps on driver side (staggered stepped as applicable with tailboard depth) for NFPA hosebed access and handrail mounted on driver side upper hosebed side (as applicable).	1	
MISC BODY OPTIONS			
3090-0002	The unit has no overall height restrictions.	1	
3090-0004	The unit has no overall length restrictions.	1	
3090-0007	The hosebed is to have a NFPA capacity.	1	
3340-0004	Hosebed above the booster tank. Includes forward hosebed and tower(s) cover plate work. Hosebed adjustable divider extrusion rearward of the furthest tower is	1	

Salescode	Extended Description	Qty	
MISC BODY OPTIONS			
	to run full width of the hosebed.		
3340-0015	Diamond plate single axle wheel well. Includes bolt-on composite wheel well liners and aluminum fenderettes.	1	
3340-0035	Divider Long. To run full length of hosebed (front to rear).	1	
3340-0074	Body mainframe and hosebed side assemblies for a 85" high body.	1	
3340-0093	Mud flaps, rear, black with E-ONE logo.	1	
3340-0110	The rear of each hosebed divider to have a hand hold cutout.	1	
3340-0128	Bolt-in partition walls. Locate in lower rear compartment transverse area. Partitions to seperate the side rear compartments from the rear compartment.	1	
3340-0145	Rubrail for the body and pump area module(s).	1	
SCBA BOTTLE STORAGE			
3320-0020	SCBA Bottle Storage. (4) Fire Shopp SCBA bottle storage with hinged doors with push button latches. (2) officer side and (2) driver side in wheel well area.	1	
PUMPS			
4005-0030	Rating 1250 GPM	1	
4005-0054	Hale Qflo-23L 1250 pump. Tradition.	1	
PUMP CERTIFICATION			
4475-0000	Pump certification 750-2250 GPM	1	
PUMP OPTIONS			
4015-0053-198	Steamers to be Flush + 1 Location: driver's side.	1	
4015-0053-199	Steamers to be Flush + 1 Location: officer's side.	1	
4015-0101	Pump Cooler	1	
INTAKES			
4440-0005	2.5" Left Intake Akron Manual Valve	1	
INTAKE OPTIONS			
4445-0016	Valve Relief Intake - Hale 2.5"	1	
DISCHARGES AND PRECONNECTS			
4415-0012-654	1.5" Crosslay with Akron Manual Valve. Location: crosslay 1 & 2	2	
4415-0022-350	2.5" Left Rear Discharge Akron Manual Valve Location: left rear discharge	1	
4415-0041	3" Deck Gun Discharge Akron Manual Valve	1	

Salescode	Extended Description	Qty	
DISCHARGES AND PRECONNECTS			
4415-0161-581	2.5" Left Panel Discharge Akron Manual Valve w/30 Degree Droop Location: left side discharge 1	1	
4415-0161-582	2.5" Left Panel Discharge Akron Manual Valve w/30 Degree Droop Location: left side discharge 2	1	
4415-0164-583	2.5" Right Panel Discharge Akron Manual Valve w/30 Degree Droop Location: right side discharge 1	1	
DISCHARGE OPTIONS			
4417-0058-350	Bleeder Drain Valve Plumbed to: left rear discharge	1	
4417-0058-573	Bleeder Drain Valve Plumbed to: crosslay preconnect	2	
4417-0058-575	Bleeder Drain Valve Plumbed to: left discharge	2	
4417-0058-576	Bleeder Drain Valve Plumbed to: right discharge	1	
4417-0101-356	Valve Drain Automatic. For: deck gun	1	
PRESSURE GOVERNORS			
4465-0005	Class1 Captain pressure governor.	1	
GAUGES			
4435-0001	Class 1 Intelli-Tank Water Tank Level Gauge	1	
4435-0013	Class 1 Pressure 4.5" Gauge (30-0-600 PSI)	2	
4435-0015-350	2.5" Class 1 Pressure Gauge (30-0-600). Discharge: left rear discharge	1	
4435-0015-352	2.5" Class 1 Pressure Gauge (30-0-600). Discharge: 1.5 in. crosslay preconnect	2	
4435-0015-356	2.5" Class 1 Pressure Gauge (30-0-600). Discharge: deck gun	1	
4435-0015-581	2.5" Class 1 Pressure Gauge (30-0-600). Discharge: left side discharge 1	1	
4435-0015-582	2.5" Class 1 Pressure Gauge (30-0-600). Discharge: left side discharge 2	1	
4435-0015-583	2.5" Class 1 Pressure Gauge (30-0-600). Discharge: right side discharge 1	1	
4435-0069	Enfo IV System on Pump Operator's Panel	1	
ELECTRICAL SYSTEMS			
5010-0002	Multiplex electrical system for pumper / tanker / rescue.	1	
5010-0014-G97	Vehicle data recorder for commercial cab - 2009 NFPA compliant. Includes occupant detection with display. Display location: cab dash above transmission shift panel.	1	
LIGHT BARS			
5300-0021	Light bar Federal Signal JetStream 60" LED. Red Solaris reflectors with clear	1	

Salescode	Extended Description	Qty	
LIGHT BARS			
	domes. NFPA Compliant, does not require 2 addl side facing bars. Location: Centered on the front cab roof		
WARNING LIGHT PACKAGES			
5550-0067	Flash rate for Federal QuadraFlare LED lower level warning lights to be set at pattern 4, alternating quad flash (75 QFPM).	1	
5550-0090-535	Federal Signal QuadraFlare LED lower level warning light package. Includes (6) QL64XF-R LED light heads with bezels and (4) Model 360501-04 LED light heads. Locate side facing lights: at forward most position, centered in rear wheelwell, and side facing at rear of body in rubrail if equipped.	1	
WARNING LIGHTS			
5600-0034-479-09	Federal Model SY12FS Sentry (PR) with driver amber, officer red domes. Location: rear upper body on aerial style brackets.	1	
5600-0149-336	Hazard (door ajar) light 2.5" incandescent. Location: cab dash	1	
SIRENS			
5500-0009	Federal PA300 siren recessed mounted.	1	
5500-0024-846	The electronic siren control is to be located on the center overhead console offset to driver side.	1	
SPEAKERS			
5510-0029-209	Speaker Federal Dynamax ES100-EF thru bumper. Location: driver side front bumper.	1	
DOT LIGHTING			
5150-0017	License plate light LED with chrome housing located at the rear of the body.	1	
5150-0022	Marker light LED body package. Commercial pumper bodies only.	1	
5150-0059	Federal Signal QuadraFlare LED vertical mount taillights. Includes LED stop/tail, arrow turn and backup lights with vertical Cast 3 housing and weatherproof connectors.	1	
LIGHTS - COMPARTMENT, STEP & GROUND			
5380-0008	Compartment light package incandescent for small bodies.	1	
5380-0027	Ground light package for cab and body - small.	1	
LIGHTS - DECK AND SCENE			
5390-0000-395	Deck Light - Unity 12V (PR) Location: rear body/beavertail area on the trailing edge up high	1	

Salescode	Extended Description	Qty	
LIGHTS - DECK AND SCENE			
5390-0001	Hosebed Light Unity. Locate at front area of hosebed. Switched with work light switch in cab	1	
LIGHTS - NON-WARNING			
5400-0003	Engine Compartment Light (EA).	1	
5400-0010	Incandescent pump compartment light (EA).	1	
5400-0031	Pair of Cab Dome Large Lights mounted driver and officer side front. N/A on E-0ne Chassis. Required on Comm Chassis.	1	
MISC ELECTRICAL			
5110-0017	Back up alarm 97 dB(A).	1	
HAND TOOLS			
7600-0005	Pike Pole Fiberglass 6'	1	
7600-0007	Pike Pole Fiberglass 10'	1	
HOSE / NOZZLES			
7700-0004	Hard Suction Hose 6" with Pyrolite Couplings	2	
GROUND LADDERS			
7800-0007	Alco-Lite PRL-14 Roof Ladder	1	
7800-0016	Alco-Lite PEL-24 Extension Ladder	1	
7800-0032	Alco-Lite 10' Folding Ladder w/Shoes - FL10 Alco-Lite 10FT folding aluminum ladder with safety shoes.	1	
MISC LOOSE EQUIPMENT			
7900-0010	Chrome Barrel Strainer 6"	1	
7900-0014	DOT Required Drive Away Kit - Kit includes three (3) triangular warning reflectors with carrying case. This kit is for the end user and is to remain with the truck.	1	
EXTERIOR PAINT			
8100-0089	All applicable pump/pre-connect application modules are to have a sanded finish (not painted job color). Includes upper and lower pump modules, crosswalk module and/or speedlay/pre-connect module (as applicable). Rear mounted body/pump module to be painted job color.	1	
8100-0116	Rear body surface to have a sanded finish (not painted job color). Includes hinged doors that do not have discrete sales codes and removable panels.	1	
8100-0182-000-17	Paint Body - Small - For Pumpers, Rear Mounts, S/A Tankers and Rescues. Sikkens paint. Color: FLNA3225 Red.	1	

Salescode	Extended Description	Qty	
EXTERIOR PAINT			
8100-0190-000-17	Freightliner cab paint. Paint color FLNA3225 Red.	1	
LETTERING			
8200-0022	Shade and outline for lettering.	1	
STRIPING			
8300-0002-859-12	NFPA Scotchlite Stripe - 4" wide and straight on front/sides of cab and sides/rear of body. Color: White. Location: bottom of stripe flush with bottom of cab and straight back.	1	
8300-0042	White rubrail scotchlite insert.	1	
8300-0084-000-72	Chevron "A" style 6" printed sheet Scotchlite striping on rear of body. Includes rear facing extrusions, panels and doors inboard/outboard of the beavertails(if applicable). Colors to be Yellow/Red.	1	
WARRANTY / STANDARD & EXTENDED			
9100-0000	Standard 1 Year Warranty	1	
9100-0004	10 Year/100,000 Mile Structural Warranty - Statement of Warranty	1	
9100-0005	10 Year Stainless Steel Plumbing Warranty - Statement of Warranty	1	
9100-0019	10 Year Limited Paint and Perforation Warranty - For Sikkens Paint	1	
SUPPORT, DELIVERY, INSPECTIONS AND MANUALS			
9300-0009	Manuals, Operator and Service CD-ROM.	1	
9300-0036	Tradition drive away.	1	
PRICE			$181,104.

STATE OF OHIO TERM SCHEDULE

4200 SURFACE RD
COLUMBUS, OH 43228

Quote No: 35817

12/7/2009

Quote Rev:20 Drawing Rev:1

Note: Hosebed height may not be the correct measurement for this combo. Compartment height may change.

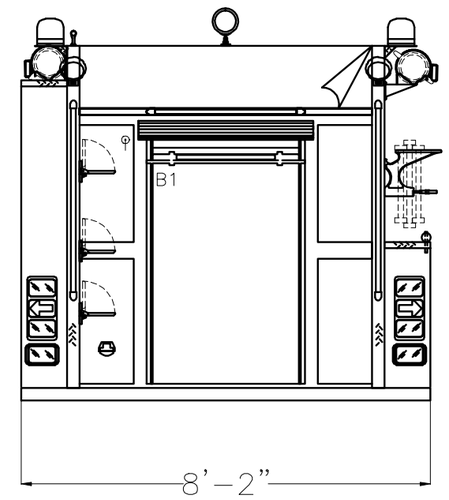

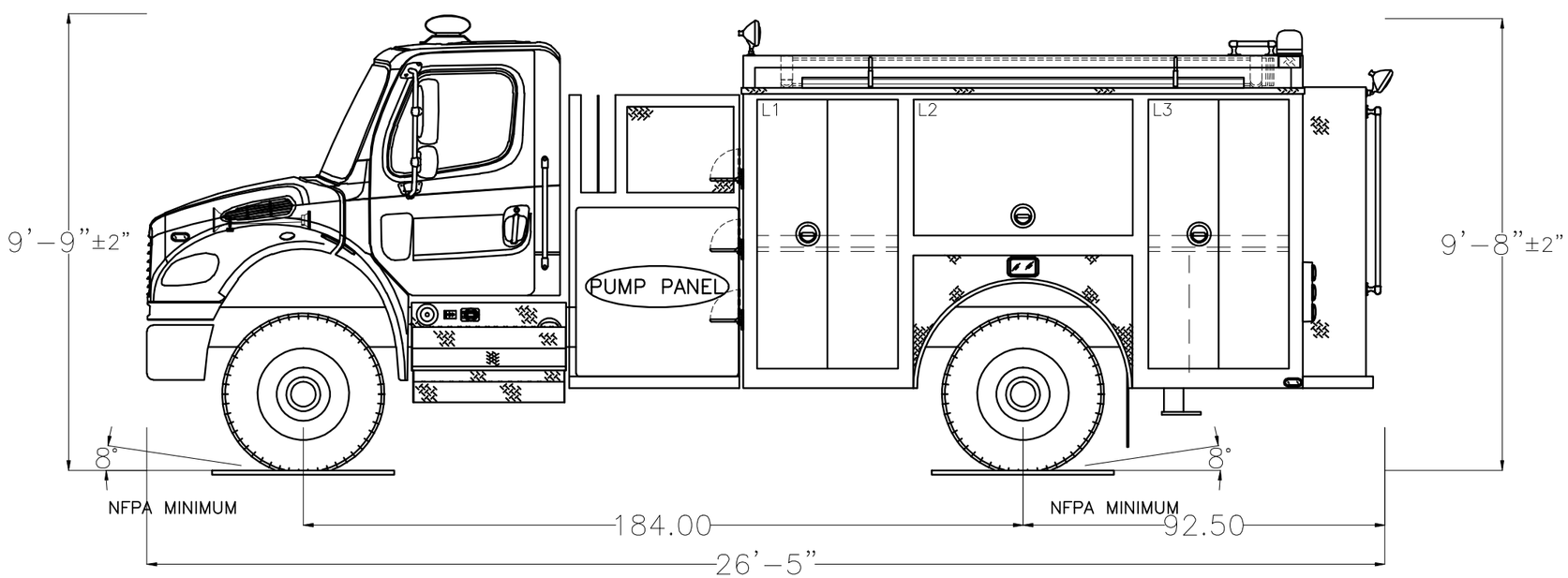

POWERED BY EZDRAW

Notice This drawing provides a GENERAL REPRESENTATION of the vehicle configuration and should be used for evaluation purposes. The respective dimensions shown,including overall height and length, are estimates and may vary due to manufacturing processes. All other items such as lighting and fixtures, plumbing, compartmentation, and other generally assembled details are shown for REFERENCE ONLY and may not be a direct reflection of the final truck configuration. In ALL situations where this drawing may conflict with the specifications, THE SPECIFICATIONS, AS REFLECTED IN THE APPROVED SHOP ORDER, SHALL PREVAIL. Unless otherwise specified, the proposed apparatus will be manufactured to the latest NFPA recommendations as well as other applicable federally regulated safety regulations. E-One reserves the right to engineer and incorporate design improvements and changes without notice, while adhering to the intent of the specification.

HALE QFLO 1250 GPM PUMP
1030 TOTAL TANK VOLUME

HOSE LOADS :

	OPENING		INTERIOR DIMENSIONS				
COMPT.	WIDTH	HEIGHT	LOWER WIDTH	LOWER HEIGHT	LOWER DEPTH	UPPER HEIGHT	UPPER DEPTH
L1	36	68.75	36	30	26	38.75	12
L2	56	34.75	56	30	N/A	34.75	12
L3	36	68.75	36	30	26	38.75	12
R1	36	30	36	30	26	0	N/A
R2	36	30	36	30	26	0	N/A
B1	36	54	38	30	26	24	14

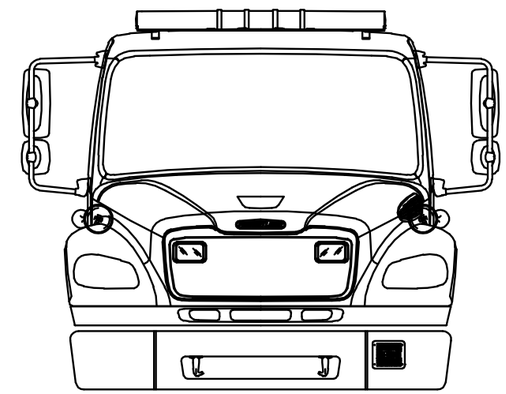

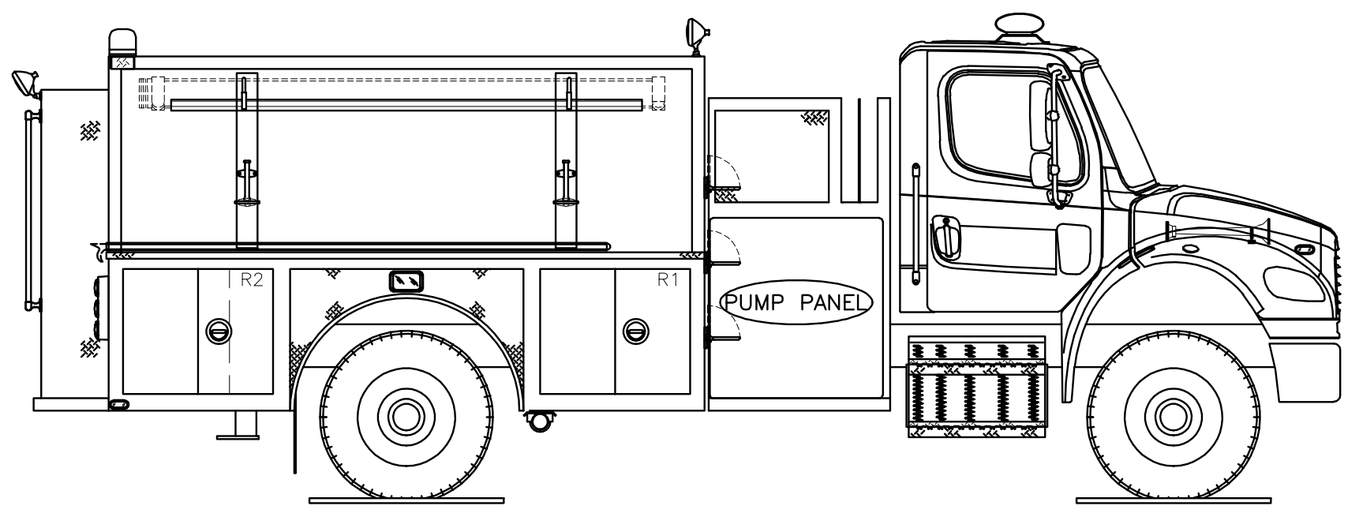

POWERED BY EZDRAW

Fire Apparatus Quotation for:
STATE OF OHIO TERM SCHEDULE

Quotation Number: 35821 Rev: 12

Unit Description: TDPM-COMM

Quote Description: Tradition Pumper Commercial – International 4400 2dr

Salesperson:

Salescode	Extended Description	Qty	
TESTING COMPLIANCE STANDARD			
1001-0015	The E-ONE supplied components of the vehicle shall meet the requirements of NFPA 1901, 2009 edition.	1	
CHASSIS MODEL			
1005-0134	International 4400 (2) door, 185" WB & 41" frame cut, front tow hooks, 12K & 23K axles, ABS brakes, 816 sq. in. radiator, 50 gal right hand fuel tank, EVS3000 transmission, (3) 1950CCA batteries, 320 alternator, ember separator and AC.	1	
CHASSIS PREP			
1020-0011	Comm Chas Prep E-1 Supp-Non FL	1	
WHEEL OPTIONS			
1050-0036	International chassis rims painted job color. Tradition.	1	
TIRE OPTIONS			
1060-0050	Tire pressure monitoring valve stem caps.	1	
AIR SYSTEM OPTIONS			
1110-0010-277	Air inlet. To charge brake system. Commercial chassis only. Location: driver's door step area	1	
1110-0063	Dual Grover Hood Mounted Air Horns with Driver and Officer Foot Switches to be Supplied and Installed by International. Tradition	1	
ENGINES & TRANSMISSIONS			
1200-0091	Exhaust brake. Provided by the chassis OEM.	1	
1200-0112	International Maxx Force 9 310 HP engine.	1	
1200-0126	Chassis speed to be electronically limited and not to exceed a maximum of 68 MPH. Note: Speed rating may be lower based off OEM tire ratings provided on chassis.	1	

Salescode	Extended Description	Qty	
CHASSIS OPTIONS			
1680-0011	Tow eyes rear below body painted	1	
1680-0078	Tow Hooks Front. Not available with extended front bumper. Tow hooks are OEM supplied with chassis	1	
1680-0107	Diamond plate trim package for a (2) door International. Includes a full length driver side and an officer side trim that will utilze pieces already supplied by the OEM.	1	
1680-0113	International commodity surcharge	1	
1680-0128	The commercial chassis to have seat belt and chassis pre-wiring for NFPA seating indicator and vehicle data recorder.	1	
1680-0149	International 4400 Model Year and 2010 EPA Engine Surcharge.	1	
CAB BADGE PACKAGE			
1610-0000	Cab and body to have applicable E-ONE logos.	1	
MIRRORS			
1670-0029	International West Coast heated mirrors with clearance lights and remote control.	1	
MISC EXTERIOR CAB OPTIONS			
1675-0007	Diesel fuel only label	1	
SEATS			
1510-0113	Seating Package Two (2) Door International. Includes One (1) Nat'l Brand Air Ride Driver and Two (2) Person Bench Seat.	1	
1685-0030	Seating capacity tag of three occupants.	1	
CAB ELECTRICAL OPTIONS			
1750-0019	Battery charger Super Smart 110 volt, 20 amp.	1	
1750-0059-277-04	Receptacle inlet 20amp with a Yellow cover. Location: driver's door step area	1	
BODY COMPT LEFT SIDE			
3100-0095	Driver side body with full height 36" wide forward and 36" wide rearward compartmentation. Includes (1) 56" wide compartment over the wheel well.	1	
BODY COMPT RIGHT SIDE			
3120-0004	Officer half side body with 36" wide forward and 36" wide rearward compartmentation. Includes adjustable ladder tracks.	1	
BODY COMPT REAR			
3110-0005	Full Height Rear Compartment. Includes smooth plate panels.	1	

Salescode	Extended Description	Qty	
BODY COMPT REAR			
3340-0080	Bolt-on diamond plate 18" tailboard (full width of body). Includes (2) squared off beavertails (no stanchions) with removable outer panels and handrails- (2) vertically on trailing edge of body and horizontally mounted handrail(s) below hosebed.	1	
DOORS			
3300-0008-015	Door double vertically hinged painted. Location(s): R1	1	
3300-0008-016	Door double vertically hinged painted. Location(s): R2	1	
3300-0011-004	Door single horizontally hinged lift-up painted. Location(s): L2	1	
3300-0019-027	Door roll up tall (greater than 45") with satin finish ROM. Location(s): B1	1	
3300-0030-003	Door double 3-point vertically hinged painted. Location(s): L1	1	
3300-0030-005	Door double 3-point vertically hinged painted. Location(s): L3	1	
SHELVES			
3370-0025-099	Permanent shelf. Locate in L1 at offset (above extrusion if applicable).	1	
3370-0025-100	Permanent shelf. Locate in L3 at offset (above extrusion if applicable).	1	
COVERS			
3305-0007-000-13	Vinyl Black hosebed cover with attached rear flap(s).	1	
3305-0008-000-13	Vinyl Black crosslay cover with attached side flaps.	1	
PUMP MODULE			
3130-0166	Pump Module to be 72" wide (side to side). Includes upper, lower, crosswalk, speedlay and tranverse module(s) if applicable.	1	
3130-0192	Side Mount Pump Module. Includes area for single stacked double crosslay (notched divider).	1	
PUMP PANELS			
3134-0011	Officer side pump panel to be vertically hinged on forward extrusion. Panel(s) to be secured in the closed position with push button latches. Upper panel to be held open with gas shock.	1	
3134-0016	Stainless steel driver and officer side pump panels.	1	
3134-0050	The gauge panel is to swing downward/forward for access to electrical connections on panel. Includes two (2) cable hold opens, and push button latches.	1	
MISC PUMP PANEL OPTIONS			
4460-0003	Pump Panel Tags Color Coded per NFPA Compliance	1	

Salescode	Extended Description	Qty	
PUMP MODULE OPTIONS			
3136-0041	Module mainframe for use with International chassis.	1	
WATER TANK			
4010-0018	1030 Gallon "T" Water Tank. Note: Any foam cell(s) and/or storage options thru the tank will reduce the overall water capacity. Tank capacity is 1030 US gallons / 857 Imperial gallons / 3898 Liters.	1	
TANK PLUMBING			
4450-0010	2" Tank Fill Akron Manual Valve	1	
4450-0119	3" Tank To Pump Akron Manual Valve w/4" Plumbing	1	
LADDER STORAGE / RACKS			
3365-0018	Hold down brackets to secure a (2) section extension and roof ladder.	1	
3365-0025-515	Attic ladder mounting brackets (PR). Locate officer side compartment top.	1	
3365-0028	Hard Suction Storage Rack. Driver side compartment top. Includes spring hold downs and scuff plates behind spring mounts (as applicable).	1	
3365-0031	Hard Suction Storage Rack. Officer side in adjustable track above ladders. Includes spring hold downs and scuff plates.	1	
3365-0034-515	(2) pike pole storage tubes. Locate officer side compartment top.	1	
3365-0049	Brand of ladders capable of being carried on unit to be Alco-Lite.	1	
3365-0086-B99	The length of pike pole(s) capable of being stored to be the following length: (2) 10' pike poles.	1	
3365-0087-C57	The length of ladder(s) capable of being stored to be the following length: 24' 2-Section and 14' roof ladder.	1	
3365-0168	Pike pole tube secondary retaining pin(s) with cable. Locate on end of pike pole tube(s).	1	
HANDRAILS / STEPS			
3330-0053-060	Folding Step. Location officer side front compartment face. Step include integral lights. Each location requires a minimum of (1) handrail per NFPA.	1	
3330-0053-062	Folding Step. Location driver side front compartment face. Step include integral lights. Each location requires a minimum of (1) handrail per NFPA.	3	
3330-0054	Steps rear NFPA. Steps include integral lights. Includes folding steps on driver side (staggered stepped as applicable with tailboard depth) for NFPA hosebed access and handrail mounted on driver side upper hosebed side (as applicable).	1	
MISC BODY OPTIONS			
3090-0002	The unit has no overall height restrictions.	1	

Salescode	Extended Description	Qty	
MISC BODY OPTIONS			
3090-0004	The unit has no overall length restrictions.	1	
3090-0007	The hosebed is to have a NFPA capacity.	1	
3340-0004	Hosebed above the booster tank. Includes forward hosebed and tower(s) cover plate work. Hosebed adjustable divider extrusion rearward of the furthest tower is to run full width of the hosebed.	1	
3340-0015	Diamond plate single axle wheel well. Includes bolt-on composite wheel well liners and aluminum fenderettes.	1	
3340-0035	Divider Long. To run full length of hosebed (front to rear).	1	
3340-0074	Body mainframe and hosebed side assemblies for a 85" high body.	1	
3340-0093	Mud flaps, rear, black with E-ONE logo.	1	
3340-0110	The rear of each hosebed divider to have a hand hold cutout.	1	
3340-0128	Bolt-in partition walls. Locate in lower rear compartment transverse area. Partitions to seperate the side rear compartments from the rear compartment.	1	
3340-0145	Rubrail for the body and pump area module(s).	1	
SCBA BOTTLE STORAGE			
3320-0020	SCBA Bottle Storage. (4) Fire Shopp SCBA bottle storage with hinged doors with push button latches. (2) officer side and (2) driver side in wheel well area.	1	
PUMPS			
4005-0030	Rating 1250 GPM	1	
4005-0054	Hale Qflo-23L 1250 pump. Tradition.	1	
PUMP CERTIFICATION			
4475-0000	Pump certification 750-2250 GPM	1	
PUMP OPTIONS			
4015-0053-198	Steamers to be Flush + 1 Location: driver's side.	1	
4015-0053-199	Steamers to be Flush + 1 Location: officer's side.	1	
4015-0101	Pump Cooler	1	
INTAKES			
4440-0005	2.5" Left Intake Akron Manual Valve	1	
INTAKE OPTIONS			
4445-0016	Valve Relief Intake - Hale 2.5"	1	

Salescode	Extended Description	Qty	
DISCHARGES AND PRECONNECTS			
4415-0012-654	1.5" Crosslay with Akron Manual Valve. Location: crosslay 1 & 2	2	
4415-0022-350	2.5" Left Rear Discharge Akron Manual Valve Location: left rear discharge	1	
4415-0041	3" Deck Gun Discharge Akron Manual Valve	1	
4415-0161-581	2.5" Left Panel Discharge Akron Manual Valve w/30 Degree Droop Location: left side discharge 1	1	
4415-0161-582	2.5" Left Panel Discharge Akron Manual Valve w/30 Degree Droop Location: left side discharge 2	1	
4415-0164-583	2.5" Right Panel Discharge Akron Manual Valve w/30 Degree Droop Location: right side discharge 1	1	
DISCHARGE OPTIONS			
4417-0058-350	Bleeder Drain Valve Plumbed to: left rear discharge	1	
4417-0058-573	Bleeder Drain Valve Plumbed to: crosslay preconnect	2	
4417-0058-575	Bleeder Drain Valve Plumbed to: left discharge	2	
4417-0058-576	Bleeder Drain Valve Plumbed to: right discharge	1	
4417-0101-356	Valve Drain Automatic. For: deck gun	1	
PRESSURE GOVERNORS			
4465-0005	Class1 Captain pressure governor.	1	
GAUGES			
4435-0001	Class 1 Intelli-Tank Water Tank Level Gauge	1	
4435-0013	Class 1 Pressure 4.5" Gauge (30-0-600 PSI)	2	
4435-0015-350	2.5" Class 1 Pressure Gauge (30-0-600). Discharge: left rear discharge	1	
4435-0015-352	2.5" Class 1 Pressure Gauge (30-0-600). Discharge: 1.5 in. crosslay preconnect	2	
4435-0015-356	2.5" Class 1 Pressure Gauge (30-0-600). Discharge: deck gun	1	
4435-0015-581	2.5" Class 1 Pressure Gauge (30-0-600). Discharge: left side discharge 1	1	
4435-0015-582	2.5" Class 1 Pressure Gauge (30-0-600). Discharge: left side discharge 2	1	
4435-0015-583	2.5" Class 1 Pressure Gauge (30-0-600). Discharge: right side discharge 1	1	
4435-0069	Enfo IV System on Pump Operator's Panel	1	
ELECTRICAL SYSTEMS			
5010-0002	Multiplex electrical system for pumper / tanker / rescue.	1	
5010-0014-E12	Vehicle data recorder for commercial cab - 2009 NFPA compliant. Includes occupant detection with display. Display location: outboard on driver's side	1	

Salescode	Extended Description	Qty	
ELECTRICAL SYSTEMS			
	overhead console.		
LIGHT BARS			
5300-0021	Light bar Federal Signal JetStream 60" LED. Red Solaris reflectors with clear domes. NFPA Compliant, does not require 2 addl side facing bars. Location: Centered on the front cab roof	1	
WARNING LIGHT PACKAGES			
5550-0067	Flash rate for Federal QuadraFlare LED lower level warning lights to be set at pattern 4, alternating quad flash (75 QFPM).	1	
5550-0090-535	Federal Signal QuadraFlare LED lower level warning light package. Includes (6) QL64XF-R LED light heads with bezels and (4) Model 360501-04 LED light heads. Locate side facing lights: at forward most position, centered in rear wheelwell, and side facing at rear of body in rubrail if equipped.	1	
WARNING LIGHTS			
5600-0034-479-09	Federal Model SY12FS Sentry (PR) with driver amber, officer red domes. Location: rear upper body on aerial style brackets.	1	
5600-0149-170	Hazard (door ajar) light 2.5" incandescent. Location: center overhead	1	
SIRENS			
5500-0009	Federal PA300 siren recessed mounted.	1	
5500-0024-170	The electronic siren control is to be located on the center overhead.	1	
SPEAKERS			
5510-0028	Speaker Federal Dynamax ES100. Located Officer's side behind Tow hook. Navistar 4400 chassis only with '07 engine.	1	
DOT LIGHTING			
5150-0017	License plate light LED with chrome housing located at the rear of the body.	1	
5150-0022	Marker light LED body package. Commercial pumper bodies only.	1	
5150-0059	Federal Signal QuadraFlare LED vertical mount taillights. Includes LED stop/tail, arrow turn and backup lights with vertical Cast 3 housing and weatherproof connectors.	1	
LIGHTS - COMPARTMENT, STEP & GROUND			
5380-0008	Compartment light package incandescent for small bodies.	1	
5380-0027	Ground light package for cab and body - small.	1	
LIGHTS - DECK AND SCENE			

Salescode	Extended Description	Qty	
LIGHTS - DECK AND SCENE			
5390-0000-395	Deck Light - Unity 12V (PR) Location: rear body/beavertail area on the trailing edge up high	1	
5390-0001	Hosebed Light Unity. Locate at front area of hosebed. Switched with work light switch in cab	1	
LIGHTS - NON-WARNING			
5400-0003	Engine Compartment Light (EA).	1	
5400-0010	Incandescent pump compartment light (EA).	1	
5400-0031	Pair of Cab Dome Large Lights mounted driver and officer side front. N/A on E-0ne Chassis. Required on Comm Chassis.	1	
MISC ELECTRICAL			
5110-0017	Back up alarm 97 dB(A).	1	
HAND TOOLS			
7600-0005	Pike Pole Fiberglass 6'	1	
7600-0007	Pike Pole Fiberglass 10'	1	
HOSE / NOZZLES			
7700-0004	Hard Suction Hose 6" with Pyrolite Couplings	2	
GROUND LADDERS			
7800-0007	Alco-Lite PRL-14 Roof Ladder	1	
7800-0016	Alco-Lite PEL-24 Extension Ladder	1	
7800-0032	Alco-Lite 10' Folding Ladder w/Shoes - FL10 Alco-Lite 10FT folding aluminum ladder with safety shoes.	1	
MISC LOOSE EQUIPMENT			
7900-0010	Chrome Barrel Strainer 6"	1	
7900-0014	DOT Required Drive Away Kit - Kit includes three (3) triangular warning reflectors with carrying case. This kit is for the end user and is to remain with the truck.	1	
EXTERIOR PAINT			
8100-0089	All applicable pump/pre-connect application modules are to have a sanded finish (not painted job color). Includes upper and lower pump modules, crosswalk module and/or speedlay/pre-connect module (as applicable). Rear mounted body/pump module to be painted job color.	1	
8100-0116	Rear body surface to have a sanded finish (not painted job color). Includes hinged doors that do not have discrete sales codes and removable panels.	1	

Salescode	Extended Description	Qty	
EXTERIOR PAINT			
8100-0182-000-17	Paint Body - Small - For Pumpers, Rear Mounts, S/A Tankers and Rescues. Sikkens paint. Color: FLNA3225 Red.	1	
8100-0191-000-17	International cab paint. Paint color FLNA3225 Red.	1	
LETTERING			
8200-0022	Shade and outline for lettering.	1	
STRIPING			
8300-0002-859-12	NFPA Scotchlite Stripe - 4" wide and straight on front/sides of cab and sides/rear of body. Color: White. Location: bottom of stripe flush with bottom of cab and straight back.	1	
8300-0042	White rubrail scotchlite insert.	1	
8300-0084-000-72	Chevron "A" style 6" printed sheet Scotchlite striping on rear of body. Includes rear facing extrusions, panels and doors inboard/outboard of the beavertails(if applicable). Colors to be Yellow/Red.	1	
WARRANTY / STANDARD & EXTENDED			
9100-0000	Standard 1 Year Warranty	1	
9100-0004	10 Year/100,000 Mile Structural Warranty - Statement of Warranty	1	
9100-0005	10 Year Stainless Steel Plumbing Warranty - Statement of Warranty	1	
9100-0019	10 Year Limited Paint and Perforation Warranty - For Sikkens Paint	1	
SUPPORT, DELIVERY, INSPECTIONS AND MANUALS			
9300-0009	Manuals, Operator and Service CD-ROM.	1	
9300-0036	Tradition drive away.	1	
PRICE			$186,454.

STATE OF OHIO TERM SCHEDULE

4200 SURFACE RD
COLUMBUS, OH 43228

Quote No: 35821

3/6/2010

Quote Rev:12 Drawing Rev:2

Note: Hosebed height may not be the correct measurement for this combo. Compartment height may change.

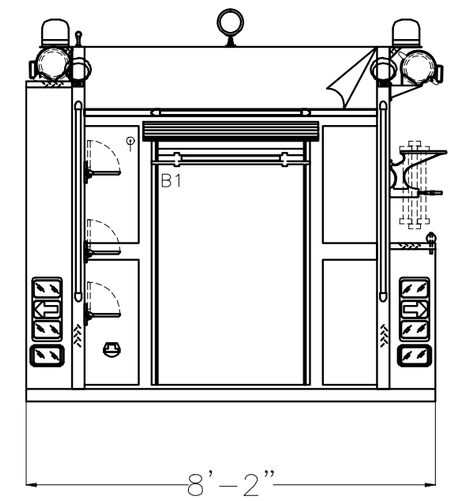

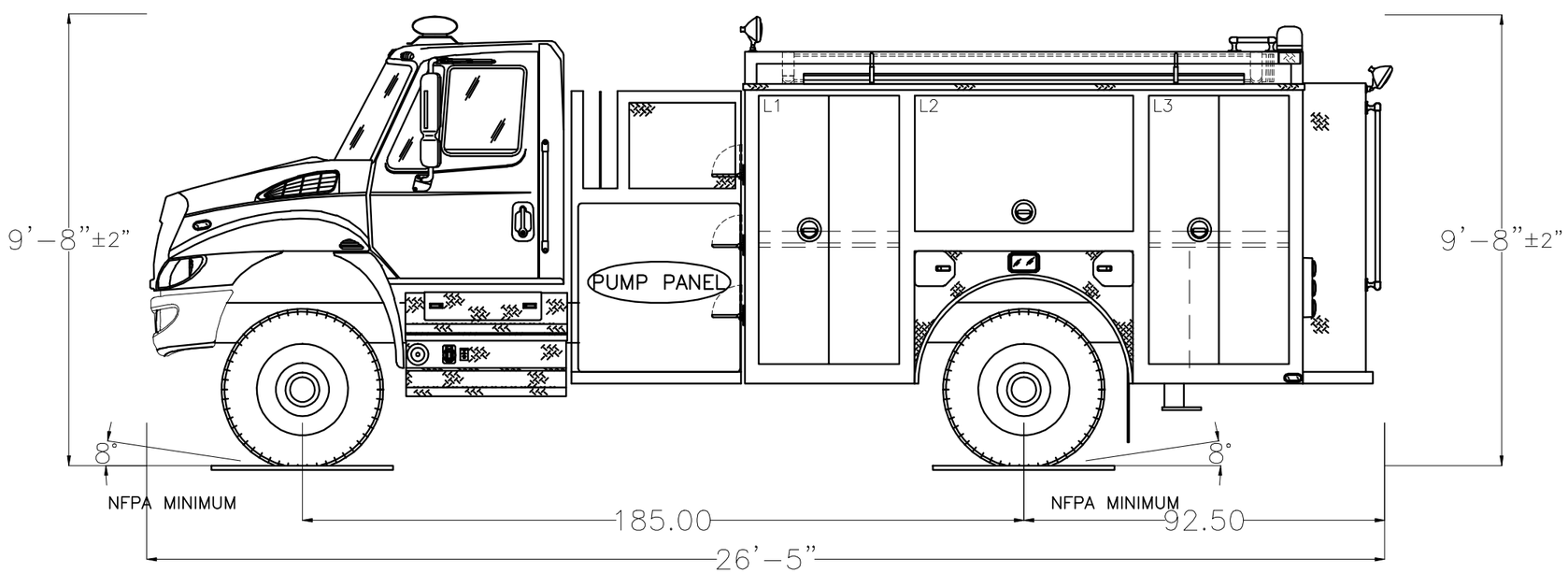

POWERED BY EZDRAW

Notice This drawing provides a GENERAL REPRESENTATION of the vehicle configuration and should be used for evaluation purposes. The respective dimensions shown,including overall height and length, are estimates and may vary due to manufacturing processes. All other items such as lighting and fixtures, plumbing, compartmentation, and other generally assembled details are shown for REFERENCE ONLY and may not be a direct reflection of the final truck configuration. In ALL situations where this drawing may conflict with the specifications, THE SPECIFICATIONS, AS REFLECTED IN THE APPROVED SHOP ORDER, SHALL PREVAIL. Unless otherwise specified, the proposed apparatus will be manufactured to the latest NFPA recommendations as well as other applicable federally regulated safety regulations. E-One reserves the right to engineer and incorporate design improvements and changes without notice, while adhering to the intent of the specification.

HALE QFLO 1250 GPM PUMP
1030 TOTAL TANK VOLUME

HOSE LOADS :

	OPENING		INTERIOR DIMENSIONS				
COMPT.	WIDTH	HEIGHT	LOWER WIDTH	LOWER HEIGHT	LOWER DEPTH	UPPER HEIGHT	UPPER DEPTH
L1	36	68.75	36	30	26	38.75	12
L2	56	34.75	56	30	N/A	34.75	12
L3	36	68.75	36	30	26	38.75	12
R1	36	30	36	30	26	0	N/A
R2	36	30	36	30	26	0	N/A
B1	36	54	38	30	26	24	14

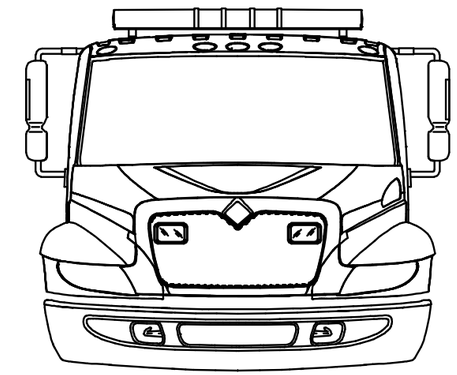

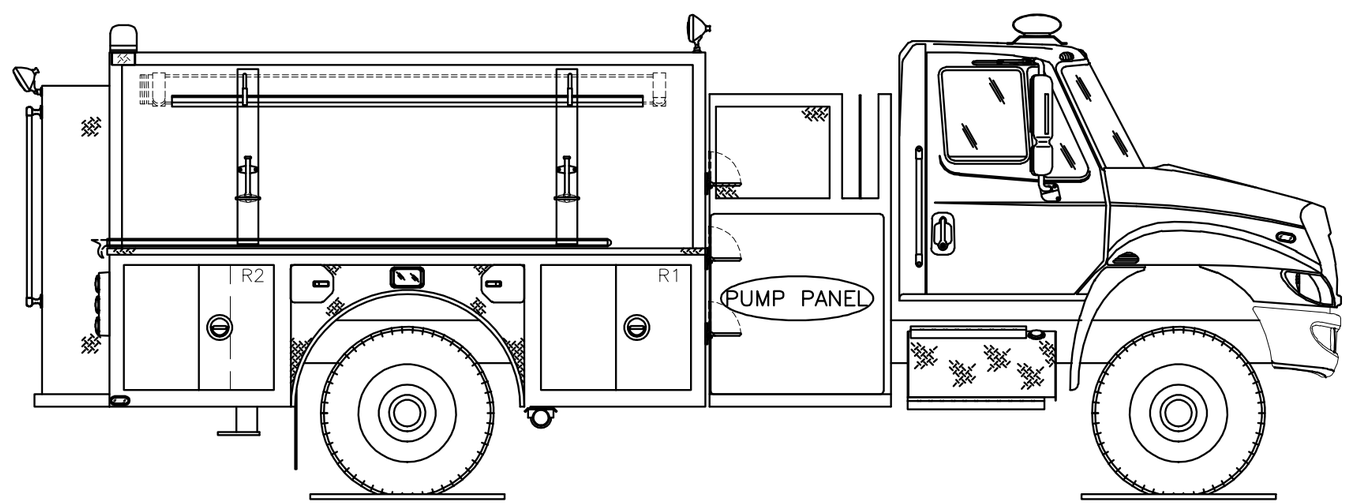

POWERED BY EZDRAW

Fire Apparatus Quotation for:
STATE OF OHIO TERM SCHEDULE

Quotation Number: 35824 Rev: 17

Unit Description: TDPM-TYPH

Quote Description: Tradition Pumper Custom - Typhoon Chassis

Salesperson:

Salescode	Extended Description	Qty	
TESTING COMPLIANCE STANDARD			
1001-0015	The E-ONE supplied components of the vehicle shall meet the requirements of NFPA 1901, 2009 edition.	1	
BUMPERS			
1160-0000	Bumper 10" stainless steel	1	
1160-0011	4" Front Bumper Extension.	1	
FRAME ASSEMBLY			
1250-0015	Frame assembly to include 176" wheelbase and 41" framecut.	1	
AXLE OPTIONS			
1025-0003	Meritor FL941 front axle 16,000lb	1	
1025-0016	Meritor RS-24-160 single rear axle 24,000lb capacity	1	
1025-0029	Front Shock absorbers	1	
SUSPENSIONS			
1070-0001	Rear suspension springs rated equal to the capacity of the axle	1	
WHEEL OPTIONS			
1050-0000	Steel wheels for front axle (2).	1	
1050-0002	Steel wheels for rear axle (4).	1	
TIRE OPTIONS			
1060-0001	Two Michelin 315 tires model XZA-1 for front axle	1	
1060-0015	Four Michelin 11R rear tires with Mud and Snow tread	1	
1060-0050	Tire pressure monitoring valve stem caps.	1	

Salescode	Extended Description	Qty	
BRAKE SYSTEMS			
1100-0000	16-1/2" x 6" S-cam brakes with ArvinMeritor automatic slack adjusters for front axle	1	
1100-0002	ArvinMeritor 16-1/2" x 7" S-cam brakes with cast brake drums for a single rear axle	1	
1100-0005	Brake system air 4X2/4X4	1	
1100-0006	Parking brake release mounted on the driver's side lower dash	1	
AIR SYSTEM OPTIONS			
1110-0000-001	Inlet for air system. Location: driver door jamb	1	
1110-0002	Air dryer Bendix AD-9	1	
1110-0006	Air lines nylon	1	
1110-0026	Air horns recessed in bumper (PR)	1	
ENGINES & TRANSMISSIONS			
1200-0017	Push button transmission selector	1	
1200-0020	Trans Synd synthetic transmission fluid for EVS 3000.	1	
1200-0097	Electronically limited speed to 68 MPH maximum. Note: Max speed may be set at 65 MPH due to tire rating.	1	
1200-0124	Eng/Trans Cummins ISC 330HP/EVS3000 2010 EPA compliant engine.	1	
SECONDARY BRAKING			
1125-0002	Brake Jacob's engine compression	1	
COOLING PACKAGE			
1800-0013	Cooling system for use with Cyclone II X, Typhoon X, and Quest chassis. For use with 2010 EPA engines. Includes coolant recovery system.	1	
FUEL SYSTEMS			
1350-0003	Fuel system 50 gallon	1	
1350-0013	Fuel water Racor separator to be a bottom drop out style. Shall include indicator light and audible alarm.	1	
1350-0022	Fuel line hose rubber.	1	
ALTERNATOR			
1700-0003	Alternator Leece Neville. (270 amp SAE/240 NFPA rating).	1	
BATTERIES			
1400-0002	Battery four group 31 1000CCA	1	

Salescode	Extended Description	Qty	
CHASSIS OPTIONS			
1680-0006	Drivelines 1710	1	
1680-0011	Tow eyes rear below body painted	1	
1680-0042	Tow hooks front painted in the down position.	1	
1680-0145-J74	Diesel Exhaust Fluid (DEF) 5 gallon tank. Location: R1 floor offset forward.	1	
CAB MODEL			
1520-0013	Typhoon X medium cab with 58" CA	1	
CAB ROOF TYPE			
1615-0010	Cab roof to be "flat" (non-vista).	1	
CAB BADGE PACKAGE			
1610-0000	Cab and body to have applicable E-ONE logos.	1	
GRILLE			
1620-0004	ABS chrome plated grille.	1	
CAB DOOR OPTIONS			
1550-0003	Rear crew cab doors in the medium position.	1	
1550-0005	Driver and Officer cab door windows. Include forward vent window.	1	
1550-0011	Rear crew cab door windows. Includes manual roll-down actuation. Not available with paddle style door latching.	1	
1550-0016	Door panels cab ABS	1	
1550-0025	All cab doors shall have "L" style exterior latches.	1	
1550-0027	Front cab door windows to manually roll up.	1	
1550-0037-659	(4) Incandescent cab step area lighting. Locate each light in on each cab door in the inboard position. Lights to be switched with door ajar.	1	
1550-0044	All cab door kick plates to be made from diamond plate aluminum.	1	
1550-0059-000-72	Reflective Yellow/Red striping positioned in the "A" formation located in the lower cab door panels	1	
MIRRORS			
1670-0038	Lang Mekra mirrors w/LED marker lights and turn signals, remote, heated and convex pair.	1	
MISC EXTERIOR CAB OPTIONS			
1550-0020	Windows cab side fixed driver's side	1	

Salescode	Extended Description	Qty	
MISC EXTERIOR CAB OPTIONS			
1550-0033	Windows cab side fixed officer's side	1	
1675-0022	Pair of 18" handrails located just behind driver and officer front door one each side	1	
1675-0023	Pair of 18" handrails located just behind driver and officer rear door (ALS doors if equipped) one each side.	1	
1675-0030	Mud flaps, front, black with E-ONE logo.	1	
1675-0047	Rear cab wall to be 3/16" aluminum diamond plate.	1	
HVAC			
1515-0017	Air conditioning for the Typhoon X, CII X and Quest with Cummins ISC/ISL engine, radiator mounted condensor.	1	
SEATS			
1510-0003	Seats 911 Brand.	1	
1510-0007	Seat cover material vinyl.	1	
1510-0008	Seat color gray	1	
1510-0035-147	Universal air pack bottle bracket (EA). Location: officer's seat	1	
1510-0035-148	Universal air pack bottle bracket (EA). Location: rear facing driver's side	1	
1510-0035-215	Universal air pack bottle bracket (EA). Location: rear facing officer's side	1	
1510-0038	Driver seat 911 air ride.	1	
1510-0042	Officer seat to be 911 fixed SCBA	1	
1510-0050	Rear facing 911 seat with SCBA driver's side	1	
1510-0053	Rear facing 911 seat with SCBA officer's side	1	
1685-0031	Seating capacity tag of four occupants.	1	
MISC INTERIOR CAB OPTIONS			
1685-0000	Cab interior gray. Does not include engine cover or seat color.	1	
1685-0005	Lexan sun visors, driver and officer's side overhead	1	
CAB ELECTRICAL OPTIONS			
1750-0019	Battery charger Super Smart 110 volt, 20 amp.	1	
1750-0029	Switch horn button two position DOT/air horn	1	
1750-0046-195	Cab Headlights. Position: lower	1	
1750-0059-179-04	Receptacle inlet 20amp with a Yellow cover. Location: outside driver's door next to handrail	1	
1750-0075	English dominant main cab gauge cluster.	1	

Salescode	Extended Description	Qty	
CAB ELECTRICAL OPTIONS			
1750-0083-172	Turn signal Federal Signal QuadraFlare QL64Z-ARROW LED amber pair located upper headlight bezel	1	
1750-0188	DPF Regeneration override switch.	1	
1750-0198-A31	Battery charger to be located behind driver's seat.	1	
5400-0037	Dome Lts Red/White Incandescent. Package includes two lights mounted in the front and two mounted in the rear of the cab. White light wire through door and light assembly mounted switch. Red light through light assembly mounted switch.	1	
BODY COMPT LEFT SIDE			
3100-0095	Driver side body with full height 36" wide forward and 36" wide rearward compartmentation. Includes (1) 56" wide compartment over the wheel well.	1	
BODY COMPT RIGHT SIDE			
3120-0004	Officer half side body with 36" wide forward and 36" wide rearward compartmentation. Includes adjustable ladder tracks.	1	
BODY COMPT REAR			
3110-0005	Full Height Rear Compartment. Includes smooth plate panels.	1	
3340-0080	Bolt-on diamond plate 18" tailboard (full width of body). Includes (2) squared off beavertails (no stanchions) with removable outer panels and handrails- (2) vertically on trailing edge of body and horizontally mounted handrail(s) below hosebed.	1	
DOORS			
3300-0008-015	Door double vertically hinged painted. Location(s): R1	1	
3300-0008-016	Door double vertically hinged painted. Location(s): R2	1	
3300-0011-004	Door single horizontally hinged lift-up painted. Location(s): L2	1	
3300-0019-027	Door roll up tall (greater than 45") with satin finish ROM. Location(s): B1	1	
3300-0030-003	Door double 3-point vertically hinged painted. Location(s): L1	1	
3300-0030-005	Door double 3-point vertically hinged painted. Location(s): L3	1	
SHELVES			
3370-0025-099	Permanent shelf. Locate in L1 at offset (above extrusion if applicable).	1	
3370-0025-100	Permanent shelf. Locate in L3 at offset (above extrusion if applicable).	1	
COVERS			
3305-0007-000-02	Vinyl Red hosebed cover with attached rear flap(s).	1	

Salescode	Extended Description	Qty	
COVERS			
3305-0008-000-02	Vinyl Red crosslay cover with attached side flaps.	1	
PUMP MODULE			
3130-0166	Pump Module to be 72" wide (side to side). Includes upper, lower, crosswalk, speedlay and tranverse module(s) if applicable.	1	
3130-0192	Side Mount Pump Module. Includes area for single stacked double crosslay (notched divider).	1	
PUMP PANELS			
3134-0011	Officer side pump panel to be vertically hinged on forward extrusion. Panel(s) to be secured in the closed position with push button latches. Upper panel to be held open with gas shock.	1	
3134-0016	Stainless steel driver and officer side pump panels.	1	
3134-0050	The gauge panel is to swing downward/forward for access to electrical connections on panel. Includes two (2) cable hold opens, and push button latches.	1	
MISC PUMP PANEL OPTIONS			
4460-0003	Pump Panel Tags Color Coded per NFPA Compliance	1	
4460-0034	Cab jack access door. Located on officer side pump panel in upper rearward area. Includes twist and turn latch.	1	
PUMP MODULE OPTIONS			
3136-0040	Module mainframe for use with Typhoon chassis.	1	
WATER TANK			
4010-0018	1030 Gallon "T" Water Tank. Note: Any foam cell(s) and/or storage options thru the tank will reduce the overall water capacity. Tank capacity is 1030 US gallons / 857 Imperial gallons / 3898 Liters.	1	
TANK PLUMBING			
4450-0010	2" Tank Fill Akron Manual Valve	1	
4450-0119	3" Tank To Pump Akron Manual Valve w/4" Plumbing	1	
LADDER STORAGE / RACKS			
3365-0018	Hold down brackets to secure a (2) section extension and roof ladder.	1	
3365-0034-515	(2) pike pole storage tubes. Locate officer side compartment top.	1	
3365-0049	Brand of ladders capable of being carried on unit to be Alco-Lite.	1	
3365-0086-B99	The length of pike pole(s) capable of being stored to be the following length: (2) 10' pike poles.	1	

Salescode	Extended Description	Qty	
LADDER STORAGE / RACKS			
3365-0087-C57	The length of ladder(s) capable of being stored to be the following length: 24' 2-Section and 14' roof ladder.	1	
3365-0168	Pike pole tube secondary retaining pin(s) with cable. Locate on end of pike pole tube(s).	1	
HANDRAILS / STEPS			
3330-0053-060	Folding Step. Location officer side front compartment face. Step include integral lights. Each location requires a minimum of (1) handrail per NFPA.	1	
3330-0053-062	Folding Step. Location driver side front compartment face. Step include integral lights. Each location requires a minimum of (1) handrail per NFPA.	3	
3330-0054	Steps rear NFPA. Steps include integral lights. Includes folding steps on driver side (staggered stepped as applicable with tailboard depth) for NFPA hosebed access and handrail mounted on driver side upper hosebed side (as applicable).	1	
MISC BODY OPTIONS			
3090-0002	The unit has no overall height restrictions.	1	
3090-0004	The unit has no overall length restrictions.	1	
3090-0007	The hosebed is to have a NFPA capacity.	1	
3340-0004	Hosebed above the booster tank. Includes forward hosebed and tower(s) cover plate work. Hosebed adjustable divider extrusion rearward of the furthest tower is to run full width of the hosebed.	1	
3340-0015	Diamond plate single axle wheel well. Includes bolt-on composite wheel well liners and aluminum fenderettes.	1	
3340-0035	Divider Long. To run full length of hosebed (front to rear).	1	
3340-0058	Recessed fuel fill driver side wheel well.	1	
3340-0074	Body mainframe and hosebed side assemblies for a 85" high body.	1	
3340-0093	Mud flaps, rear, black with E-ONE logo.	1	
3340-0110	The rear of each hosebed divider to have a hand hold cutout.	1	
3340-0128	Bolt-in partition walls. Locate in lower rear compartment transverse area. Partitions to seperate the side rear compartments from the rear compartment.	1	
3340-0145	Rubrail for the body and pump area module(s).	1	
SCBA BOTTLE STORAGE			
3320-0020	SCBA Bottle Storage. (4) Fire Shopp SCBA bottle storage with hinged doors with push button latches. (2) officer side and (2) driver side in wheel well area.	1	
PUMPS			

Salescode	Extended Description	Qty	
PUMPS			
4005-0030	Rating 1250 GPM	1	
4005-0054	Hale Qflo-23L 1250 pump. Tradition.	1	
PUMP CERTIFICATION			
4475-0000	Pump certification 750-2250 GPM	1	
PUMP OPTIONS			
4015-0053-198	Steamers to be Flush + 1 Location: driver's side.	1	
4015-0053-199	Steamers to be Flush + 1 Location: officer's side.	1	
4015-0101	Pump Cooler	1	
INTAKES			
4440-0005	2.5" Left Intake Akron Manual Valve	1	
INTAKE OPTIONS			
4445-0016	Valve Relief Intake - Hale 2.5"	1	
DISCHARGES AND PRECONNECTS			
4415-0012-654	1.5" Crosslay with Akron Manual Valve. Location: crosslay 1 & 2	2	
4415-0022-350	2.5" Left Rear Discharge Akron Manual Valve Location: left rear discharge	1	
4415-0041	3" Deck Gun Discharge Akron Manual Valve	1	
4415-0161-581	2.5" Left Panel Discharge Akron Manual Valve w/30 Degree Droop Location: left side discharge 1	1	
4415-0161-582	2.5" Left Panel Discharge Akron Manual Valve w/30 Degree Droop Location: left side discharge 2	1	
4415-0164-583	2.5" Right Panel Discharge Akron Manual Valve w/30 Degree Droop Location: right side discharge 1	1	
DISCHARGE OPTIONS			
4417-0058-350	Bleeder Drain Valve Plumbed to: left rear discharge	1	
4417-0058-573	Bleeder Drain Valve Plumbed to: crosslay preconnect	2	
4417-0058-575	Bleeder Drain Valve Plumbed to: left discharge	2	
4417-0058-576	Bleeder Drain Valve Plumbed to: right discharge	1	
4417-0101-356	Valve Drain Automatic. For: deck gun	1	
PRESSURE GOVERNORS			
4465-0005	Class1 Captain pressure governor.	1	

Salescode	Extended Description	Qty	
GAUGES			
4435-0001	Class 1 Intelli-Tank Water Tank Level Gauge	1	
4435-0013	Class 1 Pressure 4.5" Gauge (30-0-600 PSI)	2	
4435-0015-350	2.5" Class 1 Pressure Gauge (30-0-600). Discharge: left rear discharge	1	
4435-0015-352	2.5" Class 1 Pressure Gauge (30-0-600). Discharge: 1.5 in. crosslay preconnect	2	
4435-0015-356	2.5" Class 1 Pressure Gauge (30-0-600). Discharge: deck gun	1	
4435-0015-581	2.5" Class 1 Pressure Gauge (30-0-600). Discharge: left side discharge 1	1	
4435-0015-582	2.5" Class 1 Pressure Gauge (30-0-600). Discharge: left side discharge 2	1	
4435-0015-583	2.5" Class 1 Pressure Gauge (30-0-600). Discharge: right side discharge 1	1	
4435-0069	Enfo IV System on Pump Operator's Panel	1	
ELECTRICAL SYSTEMS			
5010-0002	Multiplex electrical system for pumper / tanker / rescue.	1	
5010-0003	Multiplex modem kit. Includes cable, modem, and adapter harness.	1	
5010-0004	Multiplex Data Logger	1	
5010-0013-E91	Vehicle data recorder - 2009 NFPA compliant. Includes occupant detection with display. Display location: Driver side of center dash electrical cover.	1	
LIGHT BARS			
5300-0021	Light bar Federal Signal JetStream 60" LED. Red Solaris reflectors with clear domes. NFPA Compliant, does not require 2 addl side facing bars. Location: Centered on the front cab roof	1	
WARNING LIGHT PACKAGES			
5550-0057-535	Federal Signal QuadraFlare LED lower level warning light package. Includes (8) QL64XF-R LED light heads with bezels and (2) Model 3300-04 LED light heads. Locate side facing lights: at forward most position, centered in rear wheelwell, and side facing at rear of body in rubrail if equipped.	1	
5550-0067	Flash rate for Federal QuadraFlare LED lower level warning lights to be set at pattern 4, alternating quad flash (75 QFPM).	1	
WARNING LIGHTS			
5600-0034-479-09	Federal Model SY12FS Sentry (PR) with driver amber, officer red domes. Location: rear upper body on aerial style brackets.	1	
5600-0149-170	Hazard (door ajar) light 2.5" incandescent. Location: center overhead	1	
SIRENS			
5500-0009	Federal PA300 siren recessed mounted.	1	

Salescode	Extended Description	Qty	
SIRENS			
5500-0024-170	The electronic siren control is to be located on the center overhead.	1	
SPEAKERS			
5510-0029-209	Speaker Federal Dynamax ES100-EF thru bumper. Location: driver side front bumper.	1	
DOT LIGHTING			
5150-0017	License plate light LED with chrome housing located at the rear of the body.	1	
5150-0025	Marker light LED body/cab package. E-One custom cab and pumper or tanker body only.	1	
5150-0059	Federal Signal QuadraFlare LED vertical mount taillights. Includes LED stop/tail, arrow turn and backup lights with vertical Cast 3 housing and weatherproof connectors.	1	
LIGHTS - COMPARTMENT, STEP & GROUND			
5380-0008	Compartment light package incandescent for small bodies.	1	
5380-0027	Ground light package for cab and body - small.	1	
LIGHTS - DECK AND SCENE			
5390-0000-395	Deck Light - Unity 12V (PR) Location: rear body/beavertail area on the trailing edge up high	1	
5390-0001	Hosebed Light Unity. Locate at front area of hosebed. Switched with work light switch in cab	1	
LIGHTS - NON-WARNING			
5400-0003	Engine Compartment Light (EA).	1	
5400-0010	Incandescent pump compartment light (EA).	1	
5400-0039	Spotlight Specialty 2150 hand held located on officer's side of cab dash - hardwired.	1	
CONTROLS / SWITCHES			
5100-0000-199	Foot Switch to control air horns located officer's side	1	
5100-0007-198	Foot Switch to control electronic siren located driver's side	1	
MISC ELECTRICAL			
5110-0017	Back up alarm 97 dB(A).	1	
HAND TOOLS			
7600-0005	Pike Pole Fiberglass 6'	1	

Salescode	Extended Description	Qty	
HAND TOOLS			
7600-0007	Pike Pole Fiberglass 10'	1	
HOSE / NOZZLES			
7700-0004	Hard Suction Hose 6" with Pyrolite Couplings	2	
GROUND LADDERS			
7800-0007	Alco-Lite PRL-14 Roof Ladder	1	
7800-0016	Alco-Lite PEL-24 Extension Ladder	1	
7800-0032	Alco-Lite 10' Folding Ladder w/Shoes - FL10 Alco-Lite 10FT folding aluminum ladder with safety shoes.	1	
MISC LOOSE EQUIPMENT			
7900-0010	Chrome Barrel Strainer 6"	1	
7900-0014	DOT Required Drive Away Kit - Kit includes three (3) triangular warning reflectors with carrying case. This kit is for the end user and is to remain with the truck.	1	
EXTERIOR PAINT			
8100-0089	All applicable pump/pre-connect application modules are to have a sanded finish (not painted job color). Includes upper and lower pump modules, crosswalk module and/or speedlay/pre-connect module (as applicable). Rear mounted body/pump module to be painted job color.	1	
8100-0116	Rear body surface to have a sanded finish (not painted job color). Includes hinged doors that do not have discrete sales codes and removable panels.	1	
8100-0176-000-17	Paint E-One chassis cab - Sikkens paint. Color: FLNA3225 Red.	1	
8100-0182-000-17	Paint Body - Small - For Pumpers, Rear Mounts, S/A Tankers and Rescues. Sikkens paint. Color: FLNA3225 Red.	1	
8100-0186-000-39	Paint exterior surface of outer steel wheels. Sikkens paint. Color: Job Color.	1	
INTERIOR PAINT			
8150-0010	The interior of the cab to be paint OTO gray	1	
STRIPING			
8300-0002-333-12	NFPA Scotchlite Stripe - 4" wide and straight on front/sides of cab and sides/rear of body. Color: White. Location: top of stripe flush with top of bumper and straight back.	1	
8300-0042	White rubrail scotchlite insert.	1	
8300-0084-000-72	Chevron "A" style 6" printed sheet Scotchlite striping on rear of body. Includes rear facing extrusions, panels and doors inboard/outboard of the beavertails(if	1	

Salescode	Extended Description	Qty	
STRIPING			
	applicable). Colors to be Yellow/Red.		
WARRANTY / STANDARD & EXTENDED			
9100-0000	Standard 1 Year Warranty	1	
9100-0003	Lifetime Frame Warranty	1	
9100-0004	10 Year/100,000 Mile Structural Warranty - Statement of Warranty	1	
9100-0005	10 Year Stainless Steel Plumbing Warranty - Statement of Warranty	1	
9100-0019	10 Year Limited Paint and Perforation Warranty - For Sikkens Paint	1	
SUPPORT, DELIVERY, INSPECTIONS AND MANUALS			
9300-0009	Manuals, Operator and Service CD-ROM.	1	
9300-0036	Tradition drive away.	1	
PRICE			$274,684.

STATE OF OHIO TERM SCHEDULE

4200 SURFACE RD
COLUMBUS, OH 43228

Quote No: 35824

12/7/2009

Quote Rev:17 Drawing Rev:1

Note: Hosebed height may not be the correct measurement for this combo. Compartment height may change.

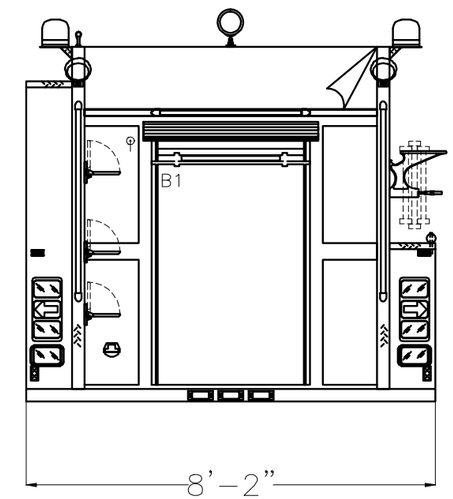

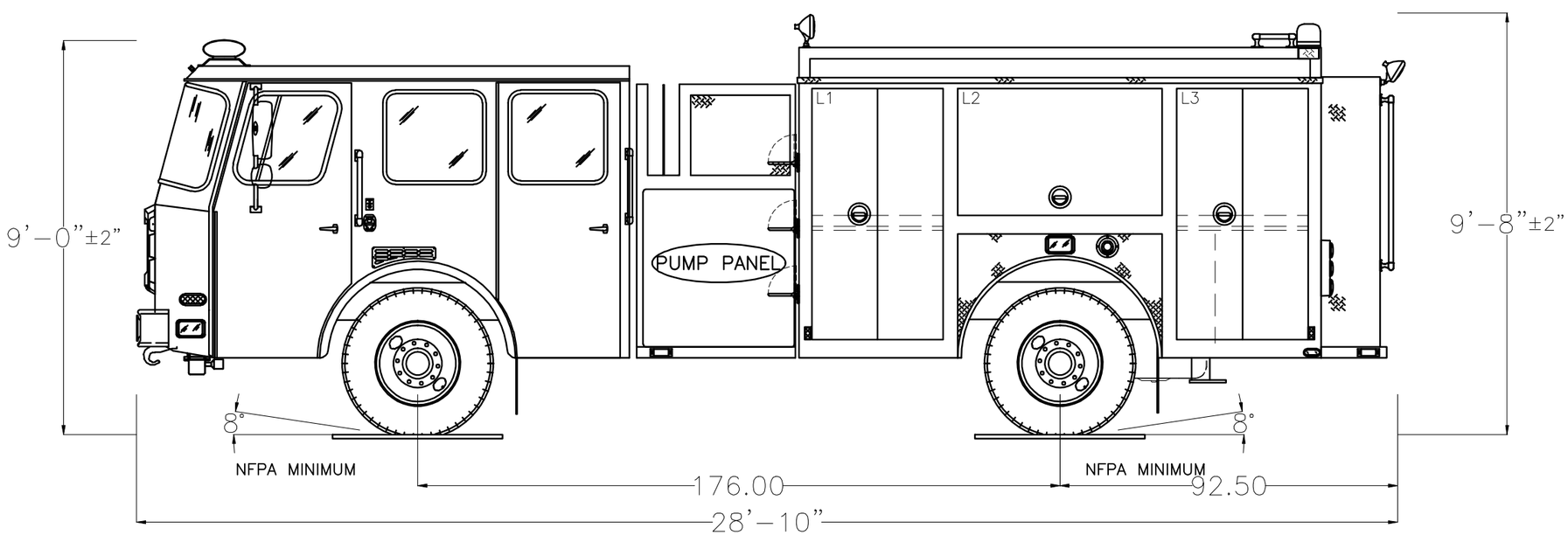

POWERED BY EZDRAW

Notice: This drawing provides a GENERAL REPRESENTATION of the vehicle configuration and should be used for evaluation purposes. The respective dimensions shown,including overall height and length, are estimates and may vary due to manufacturing processes. All other items such as lighting and fixtures, plumbing, compartmentation, and other generally assembled details are shown for REFERENCE ONLY and may not be a direct reflection of the final truck configuration. In ALL situations where this drawing may conflict with the specifications, THE SPECIFICATIONS, AS REFLECTED IN THE APPROVED SHOP ORDER, SHALL PREVAIL. Unless otherwise specified, the proposed apparatus will be manufactured to the latest NFPA recommendations as well as other applicable federally regulated safety regulations. E-One reserves the right to engineer and incorporate design improvements and changes without notice, while adhering to the intent of the specification.

HALE QFLO 1250 GPM PUMP
1030 TOTAL TANK VOLUME

HOSE LOADS :

	OPENING		INTERIOR DIMENSIONS				
COMPT.	WIDTH	HEIGHT	LOWER WIDTH	LOWER HEIGHT	LOWER DEPTH	UPPER HEIGHT	UPPER DEPTH
L1	36	68.75	36	30	26	38.75	12
L2	56	34.75	56	30	N/A	34.75	12
L3	36	68.75	36	30	26	38.75	12
R1	36	30	36	30	26	0	N/A
R2	36	30	36	30	26	0	N/A
B1	36	54	38	30	26	24	14

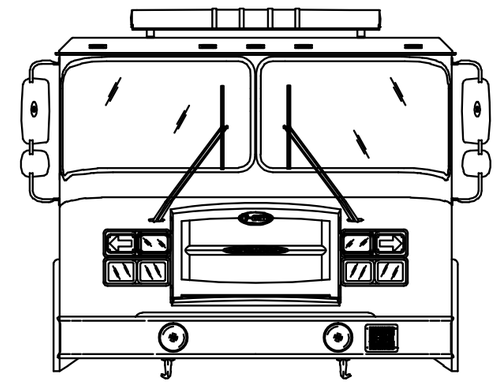

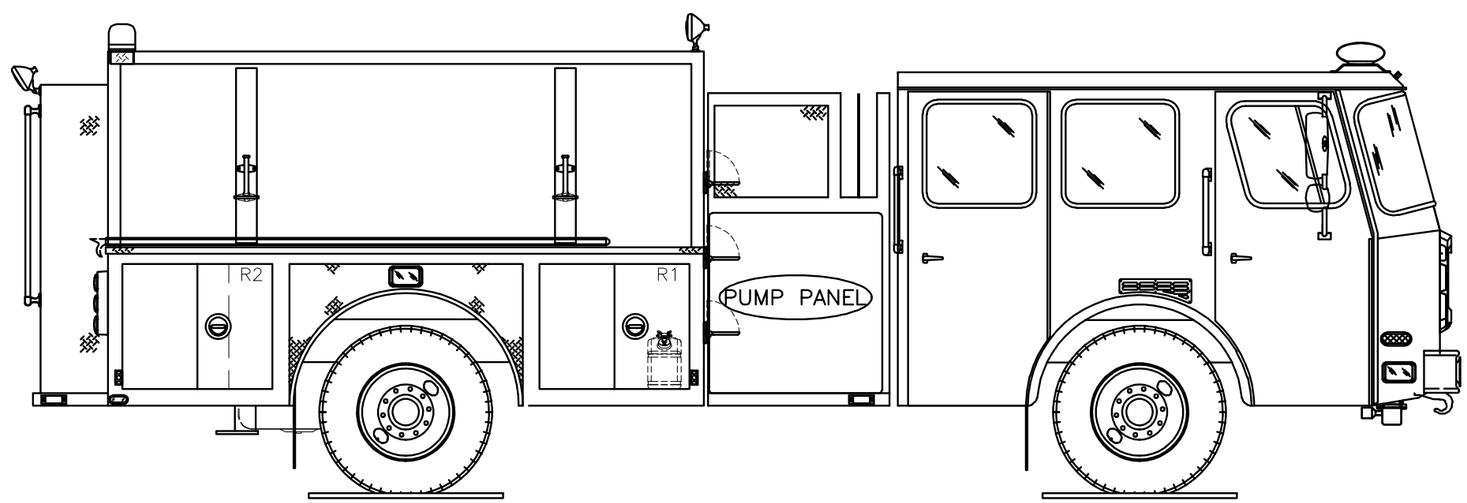

POWERED BY EZDRAW

Fire Apparatus Quotation for:
STATE OF OHIO TERM SCHEDULE

Quotation Number: 35879 Rev: 12

Unit Description: TDPM-COMM

Quote Description: Tradition Rescue Pumper Comm – Freightliner M2 2dr

Salesperson:

Salescode	Extended Description	Qty	
TESTING COMPLIANCE STANDARD			
1001-0015	The E-ONE supplied components of the vehicle shall meet the requirements of NFPA 1901, 2009 edition.	1	
CHASSIS MODEL			
1005-0115	M2 (2) door, 190" WB & 47" frame cut, front tow hooks, 12K & 23K axles, ABS brakes, 1100 sq.in. radiator, 50 gal. left hand fuel tank, EVS3000 transmission, (2) 1850CCA batteries, 270 alternator, ember separator and AC. 294-046 Separate taillight programming.	1	
CHASSIS PREP			
1020-0010	Comm Chas Prep E-1 Supp-FL	1	
FRAME ASSEMBLY			
1250-0011	Rear underbody support frame.	1	
WHEEL OPTIONS			
1050-0034	Freightliner chassis rims painted job color. Tradition.	1	
TIRE OPTIONS			
1060-0050	Tire pressure monitoring valve stem caps.	1	
AIR SYSTEM OPTIONS			
1110-0010-277	Air inlet. To charge brake system. Commercial chassis only. Location: driver's door step area	1	
1110-0060	Dual Grover Hood Mounted Air Horns with Driver and Officer Foot Switches to be Supplied and Installed by Freightliner. Tradition	1	
ENGINES & TRANSMISSIONS			
1200-0110	Freightliner Cummins ISC 330 HP engine.	1	

Salescode	Extended Description	Qty	
ENGINES & TRANSMISSIONS			
1200-0126	Chassis speed to be electronically limited and not to exceed a maximum of 68 MPH. Note: Speed rating may be lower based off OEM tire ratings provided on chassis.	1	
1200-0130	Turbo exhaust brake. Provided by the chassis OEM.	1	
CHASSIS OPTIONS			
1680-0011	Tow eyes rear below body painted	1	
1680-0078	Tow Hooks Front. Not available with extended front bumper. Tow hooks are OEM supplied with chassis	1	
1680-0110	Chassis Trim Package for a (2) door Freightliner.	1	
1680-0112	Freightliner commodity surcharge	1	
1680-0152	Freightliner Model Year and 2010 EPA Engine Surcharge.	1	
CAB BADGE PACKAGE			
1610-0000	Cab and body to have applicable E-ONE logos.	1	
MIRRORS			
1670-0034	Freightliner West Coast heated cab mirrors with remote control. Tradition.	1	
MISC EXTERIOR CAB OPTIONS			
1675-0007	Diesel fuel only label	1	
SEATS			
1510-0139	Seating Package Two (2) Door Freightliner. Includes One (1) Seats Inc 911 Universa Hi-Back Air Ride Driver and a Two (2) Person Bench Seat.	1	
1685-0012	Seating capacity tag of two occupants.	1	
CAB ELECTRICAL OPTIONS			
1750-0019	Battery charger Super Smart 110 volt, 20 amp.	1	
1750-0059-277-04	Receptacle inlet 20amp with a Yellow cover. Location: driver's door step area	1	
BODY COMPT LEFT SIDE			
3100-0153	Driver side body with full height 42" wide forward and 56" wide rearward enhanced extended compartmentation. Includes (1) 56" wide compartment over the wheel well.	1	
BODY COMPT RIGHT SIDE			
3120-0283	Officer side body with full height 42" wide forward and 56" wide rearward enhanced extended compartmentation. Includes (1) 56" wide compartment over the wheel well and one (1) storage tunnel.	1	

Salescode	Extended Description	Qty	
BODY COMPT REAR			
3110-0013	Full Height Rear Compartment with Officer Side Storage Tunnel. Includes smooth plate panels and storage access door with push button latch.	1	
3110-0052	Bolt-on diamond plate tailboard (full width of rear compartment). Includes the enhanced extended side compartment frame work and handrails- (2) vertically on trailing edge of body and horizontally mounted handrail(s) below hosebed.	1	
3110-0092	Enhanced Extended Compartmentation stepped down below hosebed level. Includes embossed diamond plate compartment tops.	1	
DOORS			
3300-0011-004	Door single horizontally hinged lift-up painted. Location(s): L2	1	
3300-0011-016	Door single horizontally hinged lift-up painted. Location(s): R2	1	
3300-0019-027	Door roll up tall (greater than 45") with satin finish ROM. Location(s): B1	1	
3300-0030-003	Door double 3-point vertically hinged painted. Location(s): L1	1	
3300-0030-005	Door double 3-point vertically hinged painted. Location(s): L3	1	
3300-0030-015	Door double 3-point vertically hinged painted. Location(s): R1	1	
3300-0030-017	Door double 3-point vertically hinged painted. Location(s): R3	1	
SHELVES			
3370-0025-101	Permanent shelf. Locate in R1 at offset (above extrusion if applicable).	1	
3370-0025-102	Permanent shelf. Locate in R3 at offset (above extrusion if applicable).	1	
COVERS			
3305-0007-000-02	Vinyl Red hosebed cover with attached rear flap(s).	1	
3305-0008-000-02	Vinyl Red crosslay cover with attached side flaps.	1	
PUMP MODULE			
3130-0166	Pump Module to be 72" wide (side to side). Includes upper, lower, crosswalk, speedlay and tranverse module(s) if applicable.	1	
3130-0192	Side Mount Pump Module. Includes area for single stacked double crosslay (notched divider).	1	
PUMP PANELS			
3134-0011	Officer side pump panel to be vertically hinged on forward extrusion. Panel(s) to be secured in the closed position with push button latches. Upper panel to be held open with gas shock.	1	
3134-0016	Stainless steel driver and officer side pump panels.	1	
3134-0050	The gauge panel is to swing downward/forward for access to electrical connections	1	

Salescode	Extended Description	Qty	
PUMP PANELS			
	on panel. Includes two (2) cable hold opens, and push button latches.		
MISC PUMP PANEL OPTIONS			
4460-0003	Pump Panel Tags Color Coded per NFPA Compliance	1	
PUMP MODULE OPTIONS			
3136-0038	Module mainframe for use with M2 chassis with 23,000 rear axle.	1	
WATER TANK			
4010-0036	780 Gallon "R" Water Tank. Note: Any foam cell(s) and/or storage options thru the tank will reduce the overall water capacity. Tank capacity is 780 US gallon / 649 Imperial gallons / 2952 Liters.	1	
TANK PLUMBING			
4450-0010	2" Tank Fill Akron Manual Valve	1	
4450-0119	3" Tank To Pump Akron Manual Valve w/4" Plumbing	1	
LADDER STORAGE / RACKS			
3365-0028	Hard Suction Storage Rack. Driver side compartment top. Includes spring hold downs and scuff plates behind spring mounts (as applicable).	1	
3365-0035	Hard Suction Storage Rack. Officer side compartment top. Includes spring hold downs and scuff plates behind spring mounts (as applicable).	1	
3365-0049	Brand of ladders capable of being carried on unit to be Alco-Lite.	1	
3365-0087-C57	The length of ladder(s) capable of being stored to be the following length: 24' 2-Section and 14' roof ladder.	1	
3365-0149-I32	Storage tunnel capable of holding: (1) 2-Section, (1) Roof, (1) Attic, (2) pike poles in Officer Side Storage Tunnel.	1	
HANDRAILS / STEPS			
3330-0053-060	Folding Step. Location officer side front compartment face. Step include integral lights. Each location requires a minimum of (1) handrail per NFPA.	3	
3330-0053-062	Folding Step. Location driver side front compartment face. Step include integral lights. Each location requires a minimum of (1) handrail per NFPA.	3	
3330-0054	Steps rear NFPA. Steps include integral lights. Includes folding steps on driver side (staggered stepped as applicable with tailboard depth) for NFPA hosebed access and handrail mounted on driver side upper hosebed side (as applicable).	1	
MISC BODY OPTIONS			
3090-0002	The unit has no overall height restrictions.	1	

Salescode	Extended Description	Qty	
MISC BODY OPTIONS			
3090-0004	The unit has no overall length restrictions.	1	
3090-0007	The hosebed is to have a NFPA capacity.	1	
3340-0004	Hosebed above the booster tank. Includes forward hosebed and tower(s) cover plate work. Hosebed adjustable divider extrusion rearward of the furthest tower is to run full width of the hosebed.	1	
3340-0015	Diamond plate single axle wheel well. Includes bolt-on composite wheel well liners and aluminum fenderettes.	1	
3340-0035	Divider Long. To run full length of hosebed (front to rear).	1	
3340-0074	Body mainframe and hosebed side assemblies for a 85" high body.	1	
3340-0093	Mud flaps, rear, black with E-ONE logo.	1	
3340-0110	The rear of each hosebed divider to have a hand hold cutout.	1	
3340-0145	Rubrail for the body and pump area module(s).	1	
SCBA BOTTLE STORAGE			
3320-0020	SCBA Bottle Storage. (4) Fire Shopp SCBA bottle storage with hinged doors with push button latches. (2) officer side and (2) driver side in wheel well area.	1	
PUMPS			
4005-0030	Rating 1250 GPM	1	
4005-0054	Hale Qflo-23L 1250 pump. Tradition.	1	
PUMP CERTIFICATION			
4475-0000	Pump certification 750-2250 GPM	1	
PUMP OPTIONS			
4015-0053-198	Steamers to be Flush + 1 Location: driver's side.	1	
4015-0053-199	Steamers to be Flush + 1 Location: officer's side.	1	
4015-0101	Pump Cooler	1	
INTAKES			
4440-0005	2.5" Left Intake Akron Manual Valve	1	
INTAKE OPTIONS			
4445-0016	Valve Relief Intake - Hale 2.5"	1	
DISCHARGES AND PRECONNECTS			
4415-0012-654	1.5" Crosslay with Akron Manual Valve. Location: crosslay 1 & 2	2	

Salescode	Extended Description	Qty	
DISCHARGES AND PRECONNECTS			
4415-0022-350	2.5" Left Rear Discharge Akron Manual Valve Location: left rear discharge	1	
4415-0041	3" Deck Gun Discharge Akron Manual Valve	1	
4415-0161-581	2.5" Left Panel Discharge Akron Manual Valve w/30 Degree Droop Location: left side discharge 1	1	
4415-0161-582	2.5" Left Panel Discharge Akron Manual Valve w/30 Degree Droop Location: left side discharge 2	1	
4415-0164-583	2.5" Right Panel Discharge Akron Manual Valve w/30 Degree Droop Location: right side discharge 1	1	
DISCHARGE OPTIONS			
4417-0058-350	Bleeder Drain Valve Plumbed to: left rear discharge	1	
4417-0058-573	Bleeder Drain Valve Plumbed to: crosslay preconnect	2	
4417-0058-575	Bleeder Drain Valve Plumbed to: left discharge	2	
4417-0058-576	Bleeder Drain Valve Plumbed to: right discharge	1	
4417-0101-356	Valve Drain Automatic. For: deck gun	1	
PRESSURE GOVERNORS			
4465-0005	Class1 Captain pressure governor.	1	
GAUGES			
4435-0001	Class 1 Intelli-Tank Water Tank Level Gauge	1	
4435-0013	Class 1 Pressure 4.5" Gauge (30-0-600 PSI)	2	
4435-0015-350	2.5" Class 1 Pressure Gauge (30-0-600). Discharge: left rear discharge	1	
4435-0015-352	2.5" Class 1 Pressure Gauge (30-0-600). Discharge: 1.5 in. crosslay preconnect	2	
4435-0015-356	2.5" Class 1 Pressure Gauge (30-0-600). Discharge: deck gun	1	
4435-0015-581	2.5" Class 1 Pressure Gauge (30-0-600). Discharge: left side discharge 1	1	
4435-0015-582	2.5" Class 1 Pressure Gauge (30-0-600). Discharge: left side discharge 2	1	
4435-0015-583	2.5" Class 1 Pressure Gauge (30-0-600). Discharge: right side discharge 1	1	
4435-0069	Enfo IV System on Pump Operator's Panel	1	
ELECTRICAL SYSTEMS			
5010-0002	Multiplex electrical system for pumper / tanker / rescue.	1	
5010-0014-G97	Vehicle data recorder for commercial cab - 2009 NFPA compliant. Includes occupant detection with display. Display location: cab dash above transmission shift panel.	1	

Salescode	Extended Description	Qty	
LIGHT BARS			
5300-0021	Light bar Federal Signal JetStream 60" LED. Red Solaris reflectors with clear domes. NFPA Compliant, does not require 2 addl side facing bars. Location: Centered on the front cab roof	1	
WARNING LIGHT PACKAGES			
5550-0067	Flash rate for Federal QuadraFlare LED lower level warning lights to be set at pattern 4, alternating quad flash (75 QFPM).	1	
5550-0090-535	Federal Signal QuadraFlare LED lower level warning light package. Includes (6) QL64XF-R LED light heads with bezels and (4) Model 360501-04 LED light heads. Locate side facing lights: at forward most position, centered in rear wheelwell, and side facing at rear of body in rubrail if equipped.	1	
WARNING LIGHTS			
5600-0034-479-09	Federal Model SY12FS Sentry (PR) with driver amber, officer red domes. Location: rear upper body on aerial style brackets.	1	
5600-0149-336	Hazard (door ajar) light 2.5" incandescent. Location: cab dash	1	
SIRENS			
5500-0009	Federal PA300 siren recessed mounted.	1	
5500-0024-846	The electronic siren control is to be located on the center overhead console offset to driver side.	1	
SPEAKERS			
5510-0029-209	Speaker Federal Dynamax ES100-EF thru bumper. Location: driver side front bumper.	1	
DOT LIGHTING			
5150-0017	License plate light LED with chrome housing located at the rear of the body.	1	
5150-0022	Marker light LED body package. Commercial pumper bodies only.	1	
5150-0059	Federal Signal QuadraFlare LED vertical mount taillights. Includes LED stop/tail, arrow turn and backup lights with vertical Cast 3 housing and weatherproof connectors.	1	
LIGHTS - COMPARTMENT, STEP & GROUND			
5380-0009	Compartment light package incandescent for medium bodies.	1	
5380-0027	Ground light package for cab and body - small.	1	
LIGHTS - DECK AND SCENE			
5390-0000-395	Deck Light - Unity 12V (PR) Location: rear body/beavertail area on the trailing edge	1	

Salescode	Extended Description	Qty	
LIGHTS - DECK AND SCENE			
	up high		
5390-0001	Hosebed Light Unity. Locate at front area of hosebed. Switched with work light switch in cab	1	
LIGHTS - NON-WARNING			
5400-0003	Engine Compartment Light (EA).	1	
5400-0010	Incandescent pump compartment light (EA).	1	
5400-0031	Pair of Cab Dome Large Lights mounted driver and officer side front. N/A on E-0ne Chassis. Required on Comm Chassis.	1	
MISC ELECTRICAL			
5110-0017	Back up alarm 97 dB(A).	1	
HAND TOOLS			
7600-0005	Pike Pole Fiberglass 6'	1	
7600-0007	Pike Pole Fiberglass 10'	1	
HOSE / NOZZLES			
7700-0004	Hard Suction Hose 6" with Pyrolite Couplings	2	
GROUND LADDERS			
7800-0007	Alco-Lite PRL-14 Roof Ladder	1	
7800-0016	Alco-Lite PEL-24 Extension Ladder	1	
7800-0032	Alco-Lite 10' Folding Ladder w/Shoes - FL10 Alco-Lite 10FT folding aluminum ladder with safety shoes.	1	
MISC LOOSE EQUIPMENT			
7900-0010	Chrome Barrel Strainer 6"	1	
7900-0014	DOT Required Drive Away Kit - Kit includes three (3) triangular warning reflectors with carrying case. This kit is for the end user and is to remain with the truck.	1	
EXTERIOR PAINT			
8100-0089	All applicable pump/pre-connect application modules are to have a sanded finish (not painted job color). Includes upper and lower pump modules, crosswalk module and/or speedlay/pre-connect module (as applicable). Rear mounted body/pump module to be painted job color.	1	
8100-0116	Rear body surface to have a sanded finish (not painted job color). Includes hinged doors that do not have discrete sales codes and removable panels.	1	

Salescode	Extended Description	Qty	
EXTERIOR PAINT			
8100-0182-000-17	Paint Body - Small - For Pumpers, Rear Mounts, S/A Tankers and Rescues. Sikkens paint. Color: FLNA3225 Red.	1	
8100-0190-000-17	Freightliner cab paint. Paint color FLNA3225 Red.	1	
STRIPING			
8300-0002-859-12	NFPA Scotchlite Stripe - 4" wide and straight on front/sides of cab and sides/rear of body. Color: White. Location: bottom of stripe flush with bottom of cab and straight back.	1	
8300-0042	White rubrail scotchlite insert.	1	
8300-0084-000-72	Chevron "A" style 6" printed sheet Scotchlite striping on rear of body. Includes rear facing extrusions, panels and doors inboard/outboard of the beavertails(if applicable). Colors to be Yellow/Red.	1	
WARRANTY / STANDARD & EXTENDED			
9100-0000	Standard 1 Year Warranty	1	
9100-0004	10 Year/100,000 Mile Structural Warranty - Statement of Warranty	1	
9100-0005	10 Year Stainless Steel Plumbing Warranty - Statement of Warranty	1	
9100-0019	10 Year Limited Paint and Perforation Warranty - For Sikkens Paint	1	
SUPPORT, DELIVERY, INSPECTIONS AND MANUALS			
9300-0009	Manuals, Operator and Service CD-ROM.	1	
9300-0036	Tradition drive away.	1	
PRICE			$192,302.

STATE OF OHIO TERM SCHEDULE

4200 SURFACE RD
COLUMBUS, OH 43228

Quote No: 35879

12/7/2009

Quote Rev:12 Drawing Rev:1

Note: Hosebed height may not be the correct measurement for this combo. Compartment height may change.

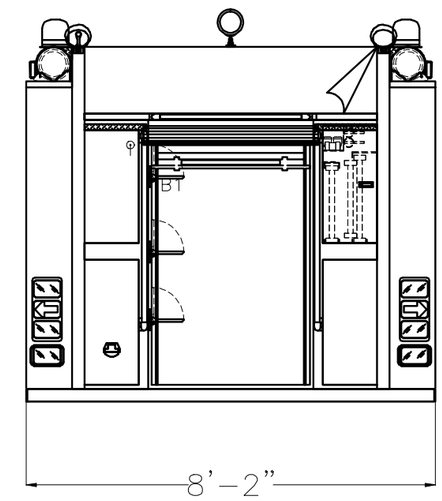

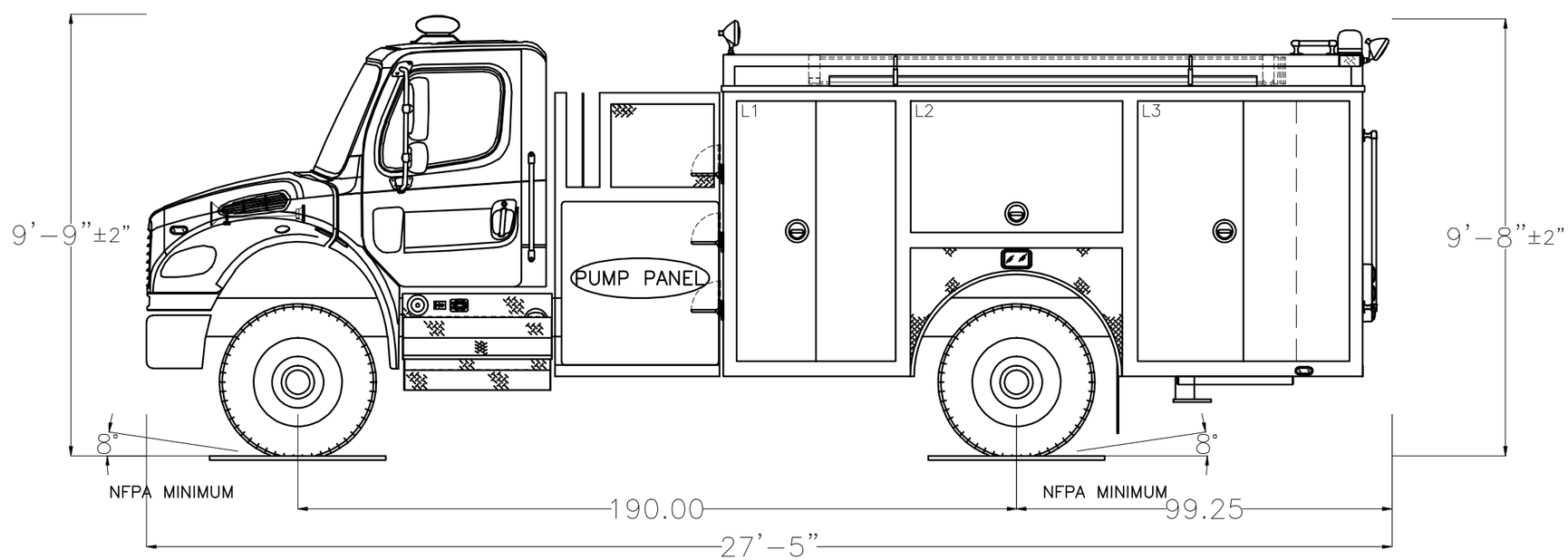

POWERED BY EZDRAW

Notice This drawing provides a GENERAL REPRESENTATION of the vehicle configuration and should be used for evaluation purposes. The respective dimensions shown,including overall height and length, are estimates and may vary due to manufacturing processes. All other items such as lighting and fixtures, plumbing, compartmentation, and other generally assembled details are shown for REFERENCE ONLY and may not be a direct reflection of the final truck configuration. In ALL situations where this drawing may conflict with the specifications, THE SPECIFICATIONS, AS REFLECTED IN THE APPROVED SHOP ORDER, SHALL PREVAIL. Unless otherwise specified, the proposed apparatus will be manufactured to the latest NFPA recommendations as well as other applicable federally regulated safety regulations. E-One reserves the right to engineer and incorporate design improvements and changes without notice, while adhering to the intent of the specification.

HALE QFLO 1250 GPM PUMP
780 TOTAL TANK VOLUME

HOSE LOADS :

	OPENING		INTERIOR DIMENSIONS				
COMPT.	WIDTH	HEIGHT	LOWER WIDTH	LOWER HEIGHT	LOWER DEPTH	UPPER HEIGHT	UPPER DEPTH
L1	42	68.75	42	30	26	38.75	26
L2	56	34.75	56	30	N/A	34.75	26
L3	56	68.75	56	30	26	38.75	26
R1	42	68.75	42	30	26	38.75	12
R2	56	34.75	56	30	N/A	34.75	12
R3	56	68.75	56	30	26	38.75	12
B1	36	53	38	30	26	23	12

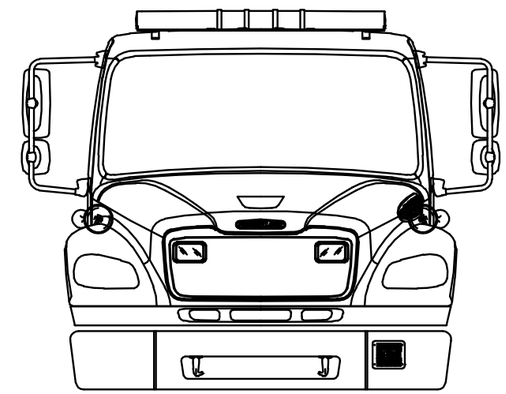

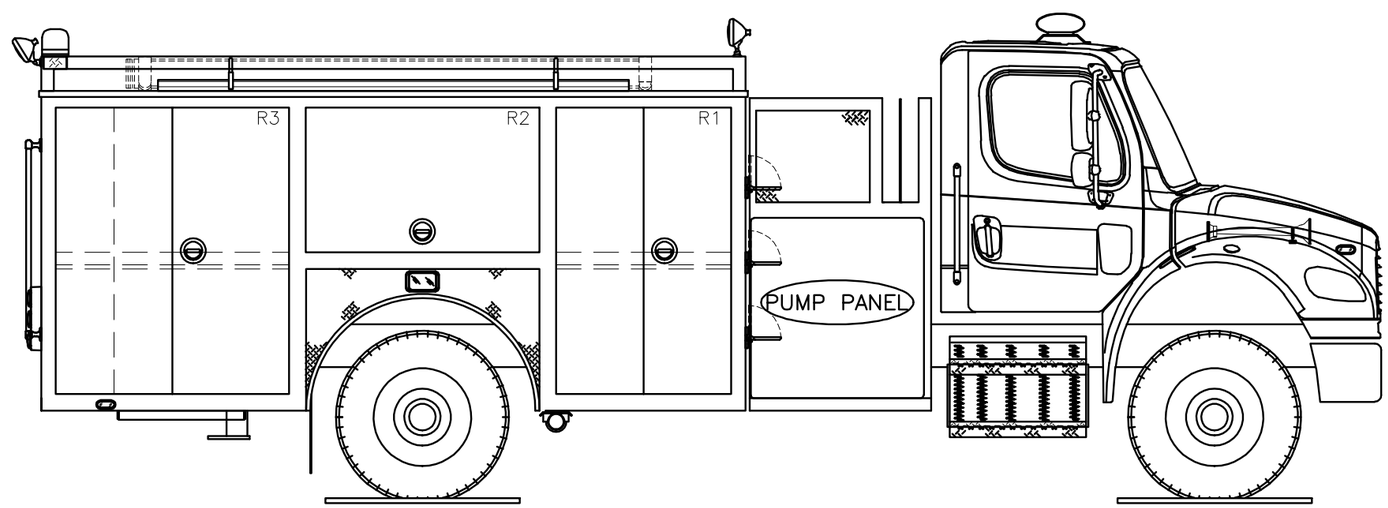

POWERED BY EZDRAW

Fire Apparatus Quotation for:
STATE OF OHIO TERM SCHEDULE

Quotation Number: 35882 Rev: 10

Unit Description: TDPM-COMM

Quote Description: Tradition Rescue Pumper Comm – International 4400 2dr Salesperson:

Salescode	Extended Description	Qty	
TESTING COMPLIANCE STANDARD			
1001-0015	The E-ONE supplied components of the vehicle shall meet the requirements of NFPA 1901, 2009 edition.	1	
CHASSIS MODEL			
1005-0138	International 4400 (2) door, 191" WB & 47" frame cut, front tow hooks, 12K & 23K axles, ABS brakes, 816 sq. in. radiator, 50 gal RH fuel tank, EVS3000 trans., (3) 1950 CCA batteries, 320 alternator, ember separator and AC.	1	
CHASSIS PREP			
1020-0011	Comm Chas Prep E-1 Supp-Non FL	1	
FRAME ASSEMBLY			
1250-0011	Rear underbody support frame.	1	
WHEEL OPTIONS			
1050-0036	International chassis rims painted job color. Tradition.	1	
TIRE OPTIONS			
1060-0050	Tire pressure monitoring valve stem caps.	1	
AIR SYSTEM OPTIONS			
1110-0010-277	Air inlet. To charge brake system. Commercial chassis only. Location: driver's door step area	1	
1110-0063	Dual Grover Hood Mounted Air Horns with Driver and Officer Foot Switches to be Supplied and Installed by International. Tradition	1	
ENGINES & TRANSMISSIONS			
1200-0091	Exhaust brake. Provided by the chassis OEM.	1	
1200-0112	International Maxx Force 9 310 HP engine.	1	

Salescode	Extended Description	Qty	
ENGINES & TRANSMISSIONS			
1200-0126	Chassis speed to be electronically limited and not to exceed a maximum of 68 MPH. Note: Speed rating may be lower based off OEM tire ratings provided on chassis.	1	
CHASSIS OPTIONS			
1680-0011	Tow eyes rear below body painted	1	
1680-0078	Tow Hooks Front. Not available with extended front bumper. Tow hooks are OEM supplied with chassis	1	
1680-0107	Diamond plate trim package for a (2) door International. Includes a full length driver side and an officer side trim that will utilze pieces already supplied by the OEM.	1	
1680-0113	International commodity surcharge	1	
1680-0128	The commercial chassis to have seat belt and chassis pre-wiring for NFPA seating indicator and vehicle data recorder.	1	
1680-0149	International 4400 Model Year and 2010 EPA Engine Surcharge.	1	
CAB BADGE PACKAGE			
1610-0000	Cab and body to have applicable E-ONE logos.	1	
MIRRORS			
1670-0029	International West Coast heated mirrors with clearance lights and remote control.	1	
MISC EXTERIOR CAB OPTIONS			
1675-0007	Diesel fuel only label	1	
SEATS			
1510-0114	Seating Package Two (2) Door International. Includes One (1) Nat'l Brand Air Ride Driver and One (1) Nat'l Brand Air Ride Officer (Non-SCBA).	1	
1685-0012	Seating capacity tag of two occupants.	1	
CAB ELECTRICAL OPTIONS			
1750-0019	Battery charger Super Smart 110 volt, 20 amp.	1	
1750-0059-277-04	Receptacle inlet 20amp with a Yellow cover. Location: driver's door step area	1	
BODY COMPT LEFT SIDE			
3100-0153	Driver side body with full height 42" wide forward and 56" wide rearward enhanced extended compartmentation. Includes (1) 56" wide compartment over the wheel well.	1	
BODY COMPT RIGHT SIDE			

Salescode	Extended Description	Qty	
BODY COMPT RIGHT SIDE			
3120-0283	Officer side body with full height 42" wide forward and 56" wide rearward enhanced extended compartmentation. Includes (1) 56" wide compartment over the wheel well and one (1) storage tunnel.	1	
BODY COMPT REAR			
3110-0013	Full Height Rear Compartment with Officer Side Storage Tunnel. Includes smooth plate panels and storage access door with push button latch.	1	
3110-0052	Bolt-on diamond plate tailboard (full width of rear compartment). Includes the enhanced extended side compartment frame work and handrails- (2) vertically on trailing edge of body and horizontally mounted handrail(s) below hosebed.	1	
3110-0092	Enhanced Extended Compartmentation stepped down below hosebed level. Includes embossed diamond plate compartment tops.	1	
DOORS			
3300-0011-004	Door single horizontally hinged lift-up painted. Location(s): L2	1	
3300-0011-016	Door single horizontally hinged lift-up painted. Location(s): R2	1	
3300-0019-027	Door roll up tall (greater than 45") with satin finish ROM. Location(s): B1	1	
3300-0030-003	Door double 3-point vertically hinged painted. Location(s): L1	1	
3300-0030-005	Door double 3-point vertically hinged painted. Location(s): L3	1	
3300-0030-015	Door double 3-point vertically hinged painted. Location(s): R1	1	
3300-0030-017	Door double 3-point vertically hinged painted. Location(s): R3	1	
SHELVES			
3370-0025-101	Permanent shelf. Locate in R1 at offset (above extrusion if applicable).	1	
3370-0025-102	Permanent shelf. Locate in R3 at offset (above extrusion if applicable).	1	
COVERS			
3305-0007-000-02	Vinyl Red hosebed cover with attached rear flap(s).	1	
3305-0008-000-02	Vinyl Red crosslay cover with attached side flaps.	1	
PUMP MODULE			
3130-0166	Pump Module to be 72" wide (side to side). Includes upper, lower, crosswalk, speedlay and tranverse module(s) if applicable.	1	
3130-0192	Side Mount Pump Module. Includes area for single stacked double crosslay (notched divider).	1	
PUMP PANELS			
3134-0011	Officer side pump panel to be vertically hinged on forward extrusion. Panel(s) to be	1	

Salescode	Extended Description	Qty	
PUMP PANELS			
	secured in the closed position with push button latches. Upper panel to be held open with gas shock.		
3134-0016	Stainless steel driver and officer side pump panels.	1	
3134-0050	The gauge panel is to swing downward/forward for access to electrical connections on panel. Includes two (2) cable hold opens, and push button latches.	1	
MISC PUMP PANEL OPTIONS			
4460-0003	Pump Panel Tags Color Coded per NFPA Compliance	1	
PUMP MODULE OPTIONS			
3136-0041	Module mainframe for use with International chassis.	1	
WATER TANK			
4010-0036	780 Gallon "R" Water Tank. Note: Any foam cell(s) and/or storage options thru the tank will reduce the overall water capacity. Tank capacity is 780 US gallon / 649 Imperial gallons / 2952 Liters.	1	
TANK PLUMBING			
4450-0010	2" Tank Fill Akron Manual Valve	1	
4450-0119	3" Tank To Pump Akron Manual Valve w/4" Plumbing	1	
LADDER STORAGE / RACKS			
3365-0028	Hard Suction Storage Rack. Driver side compartment top. Includes spring hold downs and scuff plates behind spring mounts (as applicable).	1	
3365-0035	Hard Suction Storage Rack. Officer side compartment top. Includes spring hold downs and scuff plates behind spring mounts (as applicable).	1	
3365-0049	Brand of ladders capable of being carried on unit to be Alco-Lite.	1	
3365-0087-C57	The length of ladder(s) capable of being stored to be the following length: 24' 2-Section and 14' roof ladder.	1	
3365-0149-I32	Storage tunnel capable of holding: (1) 2-Section, (1) Roof, (1) Attic, (2) pike poles in Officer Side Storage Tunnel.	1	
HANDRAILS / STEPS			
3330-0053-060	Folding Step. Location officer side front compartment face. Step include integral lights. Each location requires a minimum of (1) handrail per NFPA.	3	
3330-0053-062	Folding Step. Location driver side front compartment face. Step include integral lights. Each location requires a minimum of (1) handrail per NFPA.	3	
3330-0054	Steps rear NFPA. Steps include integral lights. Includes folding steps on driver side (staggered stepped as applicable with tailboard depth) for NFPA hosebed access	1	

Salescode	Extended Description	Qty	
HANDRAILS / STEPS			
	and handrail mounted on driver side upper hosebed side (as applicable).		
MISC BODY OPTIONS			
3090-0002	The unit has no overall height restrictions.	1	
3090-0004	The unit has no overall length restrictions.	1	
3090-0007	The hosebed is to have a NFPA capacity.	1	
3340-0004	Hosebed above the booster tank. Includes forward hosebed and tower(s) cover plate work. Hosebed adjustable divider extrusion rearward of the furthest tower is to run full width of the hosebed.	1	
3340-0015	Diamond plate single axle wheel well. Includes bolt-on composite wheel well liners and aluminum fenderettes.	1	
3340-0035	Divider Long. To run full length of hosebed (front to rear).	1	
3340-0074	Body mainframe and hosebed side assemblies for a 85" high body.	1	
3340-0093	Mud flaps, rear, black with E-ONE logo.	1	
3340-0110	The rear of each hosebed divider to have a hand hold cutout.	1	
3340-0145	Rubrail for the body and pump area module(s).	1	
SCBA BOTTLE STORAGE			
3320-0020	SCBA Bottle Storage. (4) Fire Shopp SCBA bottle storage with hinged doors with push button latches. (2) officer side and (2) driver side in wheel well area.	1	
PUMPS			
4005-0030	Rating 1250 GPM	1	
4005-0054	Hale Qflo-23L 1250 pump. Tradition.	1	
PUMP CERTIFICATION			
4475-0000	Pump certification 750-2250 GPM	1	
PUMP OPTIONS			
4015-0053-198	Steamers to be Flush + 1 Location: driver's side.	1	
4015-0053-199	Steamers to be Flush + 1 Location: officer's side.	1	
4015-0101	Pump Cooler	1	
INTAKES			
4440-0005	2.5" Left Intake Akron Manual Valve	1	
INTAKE OPTIONS			

Salescode	Extended Description	Qty	
INTAKE OPTIONS			
4445-0016	Valve Relief Intake - Hale 2.5"	1	
DISCHARGES AND PRECONNECTS			
4415-0012-654	1.5" Crosslay with Akron Manual Valve. Location: crosslay 1 & 2	2	
4415-0022-350	2.5" Left Rear Discharge Akron Manual Valve Location: left rear discharge	1	
4415-0041	3" Deck Gun Discharge Akron Manual Valve	1	
4415-0161-581	2.5" Left Panel Discharge Akron Manual Valve w/30 Degree Droop Location: left side discharge 1	1	
4415-0161-582	2.5" Left Panel Discharge Akron Manual Valve w/30 Degree Droop Location: left side discharge 2	1	
4415-0164-583	2.5" Right Panel Discharge Akron Manual Valve w/30 Degree Droop Location: right side discharge 1	1	
DISCHARGE OPTIONS			
4417-0058-350	Bleeder Drain Valve Plumbed to: left rear discharge	1	
4417-0058-573	Bleeder Drain Valve Plumbed to: crosslay preconnect	2	
4417-0058-575	Bleeder Drain Valve Plumbed to: left discharge	2	
4417-0058-576	Bleeder Drain Valve Plumbed to: right discharge	1	
4417-0101-356	Valve Drain Automatic. For: deck gun	1	
PRESSURE GOVERNORS			
4465-0005	Class1 Captain pressure governor.	1	
GAUGES			
4435-0001	Class 1 Intelli-Tank Water Tank Level Gauge	1	
4435-0013	Class 1 Pressure 4.5" Gauge (30-0-600 PSI)	2	
4435-0015-350	2.5" Class 1 Pressure Gauge (30-0-600). Discharge: left rear discharge	1	
4435-0015-352	2.5" Class 1 Pressure Gauge (30-0-600). Discharge: 1.5 in. crosslay preconnect	2	
4435-0015-356	2.5" Class 1 Pressure Gauge (30-0-600). Discharge: deck gun	1	
4435-0015-581	2.5" Class 1 Pressure Gauge (30-0-600). Discharge: left side discharge 1	1	
4435-0015-582	2.5" Class 1 Pressure Gauge (30-0-600). Discharge: left side discharge 2	1	
4435-0015-583	2.5" Class 1 Pressure Gauge (30-0-600). Discharge: right side discharge 1	1	
4435-0069	Enfo IV System on Pump Operator's Panel	1	
ELECTRICAL SYSTEMS			

Salescode	Extended Description	Qty	
ELECTRICAL SYSTEMS			
5010-0002	Multiplex electrical system for pumper / tanker / rescue.	1	
5010-0014-E12	Vehicle data recorder for commercial cab - 2009 NFPA compliant. Includes occupant detection with display. Display location: outboard on driver's side overhead console.	1	
LIGHT BARS			
5300-0021	Light bar Federal Signal JetStream 60" LED. Red Solaris reflectors with clear domes. NFPA Compliant, does not require 2 addl side facing bars. Location: Centered on the front cab roof	1	
WARNING LIGHT PACKAGES			
5550-0067	Flash rate for Federal QuadraFlare LED lower level warning lights to be set at pattern 4, alternating quad flash (75 QFPM).	1	
5550-0090-535	Federal Signal QuadraFlare LED lower level warning light package. Includes (6) QL64XF-R LED light heads with bezels and (4) Model 360501-04 LED light heads. Locate side facing lights: at forward most position, centered in rear wheelwell, and side facing at rear of body in rubrail if equipped.	1	
WARNING LIGHTS			
5600-0034-479-09	Federal Model SY12FS Sentry (PR) with driver amber, officer red domes. Location: rear upper body on aerial style brackets.	1	
5600-0149-170	Hazard (door ajar) light 2.5" incandescent. Location: center overhead	1	
SIRENS			
5500-0009	Federal PA300 siren recessed mounted.	1	
5500-0024-170	The electronic siren control is to be located on the center overhead.	1	
SPEAKERS			
5510-0028	Speaker Federal Dynamax ES100. Located Officer's side behind Tow hook. Navistar 4400 chassis only with '07 engine.	1	
DOT LIGHTING			
5150-0017	License plate light LED with chrome housing located at the rear of the body.	1	
5150-0022	Marker light LED body package. Commercial pumper bodies only.	1	
5150-0059	Federal Signal QuadraFlare LED vertical mount taillights. Includes LED stop/tail, arrow turn and backup lights with vertical Cast 3 housing and weatherproof connectors.	1	
LIGHTS - COMPARTMENT, STEP & GROUND			

Salescode	Extended Description	Qty	
LIGHTS - COMPARTMENT, STEP & GROUND			
5380-0009	Compartment light package incandescent for medium bodies.	1	
5380-0027	Ground light package for cab and body - small.	1	
LIGHTS - DECK AND SCENE			
5390-0000-395	Deck Light - Unity 12V (PR) Location: rear body/beavertail area on the trailing edge up high	1	
5390-0001	Hosebed Light Unity. Locate at front area of hosebed. Switched with work light switch in cab	1	
LIGHTS - NON-WARNING			
5400-0003	Engine Compartment Light (EA).	1	
5400-0010	Incandescent pump compartment light (EA).	1	
5400-0031	Pair of Cab Dome Large Lights mounted driver and officer side front. N/A on E-0ne Chassis. Required on Comm Chassis.	1	
MISC ELECTRICAL			
5110-0017	Back up alarm 97 dB(A).	1	
HAND TOOLS			
7600-0005	Pike Pole Fiberglass 6'	1	
7600-0007	Pike Pole Fiberglass 10'	1	
HOSE / NOZZLES			
7700-0004	Hard Suction Hose 6" with Pyrolite Couplings	2	
GROUND LADDERS			
7800-0007	Alco-Lite PRL-14 Roof Ladder	1	
7800-0016	Alco-Lite PEL-24 Extension Ladder	1	
7800-0032	Alco-Lite 10' Folding Ladder w/Shoes - FL10 Alco-Lite 10FT folding aluminum ladder with safety shoes.	1	
MISC LOOSE EQUIPMENT			
7900-0010	Chrome Barrel Strainer 6"	1	
7900-0014	DOT Required Drive Away Kit - Kit includes three (3) triangular warning reflectors with carrying case. This kit is for the end user and is to remain with the truck.	1	
EXTERIOR PAINT			
8100-0089	All applicable pump/pre-connect application modules are to have a sanded finish (not painted job color). Includes upper and lower pump modules, crosswalk module	1	

Salescode	Extended Description	Qty	
EXTERIOR PAINT			
	and/or speedlay/pre-connect module (as applicable). Rear mounted body/pump module to be painted job color.		
8100-0116	Rear body surface to have a sanded finish (not painted job color). Includes hinged doors that do not have discrete sales codes and removable panels.	1	
8100-0182-000-17	Paint Body - Small - For Pumpers, Rear Mounts, S/A Tankers and Rescues. Sikkens paint. Color: FLNA3225 Red.	1	
8100-0191-000-17	International cab paint. Paint color FLNA3225 Red.	1	
STRIPING			
8300-0002-859-12	NFPA Scotchlite Stripe - 4" wide and straight on front/sides of cab and sides/rear of body. Color: White. Location: bottom of stripe flush with bottom of cab and straight back.	1	
8300-0042	White rubrail scotchlite insert.	1	
8300-0084-000-72	Chevron "A" style 6" printed sheet Scotchlite striping on rear of body. Includes rear facing extrusions, panels and doors inboard/outboard of the beavertails(if applicable). Colors to be Yellow/Red.	1	
WARRANTY / STANDARD & EXTENDED			
9100-0000	Standard 1 Year Warranty	1	
9100-0004	10 Year/100,000 Mile Structural Warranty - Statement of Warranty	1	
9100-0005	10 Year Stainless Steel Plumbing Warranty - Statement of Warranty	1	
9100-0019	10 Year Limited Paint and Perforation Warranty - For Sikkens Paint	1	
SUPPORT, DELIVERY, INSPECTIONS AND MANUALS			
9300-0009	Manuals, Operator and Service CD-ROM.	1	
9300-0036	Tradition drive away.	1	
PRICE			$197,483.

STATE OF OHIO TERM SCHEDULE

4200 SURFACE RD
COLUMBUS, OH 43228

Quote No: 35882

3/6/2010

Quote Rev:10 Drawing Rev:2

Note: Hosebed height may not be the correct measurement for this combo. Compartment height may change.

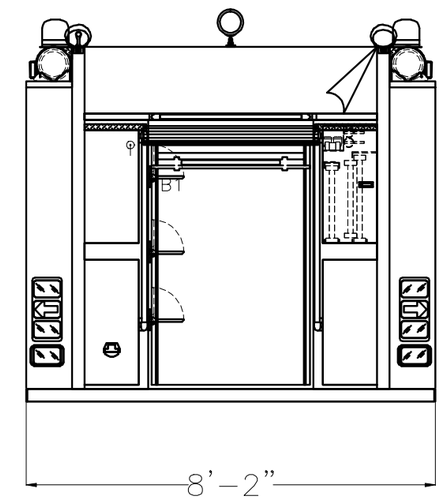

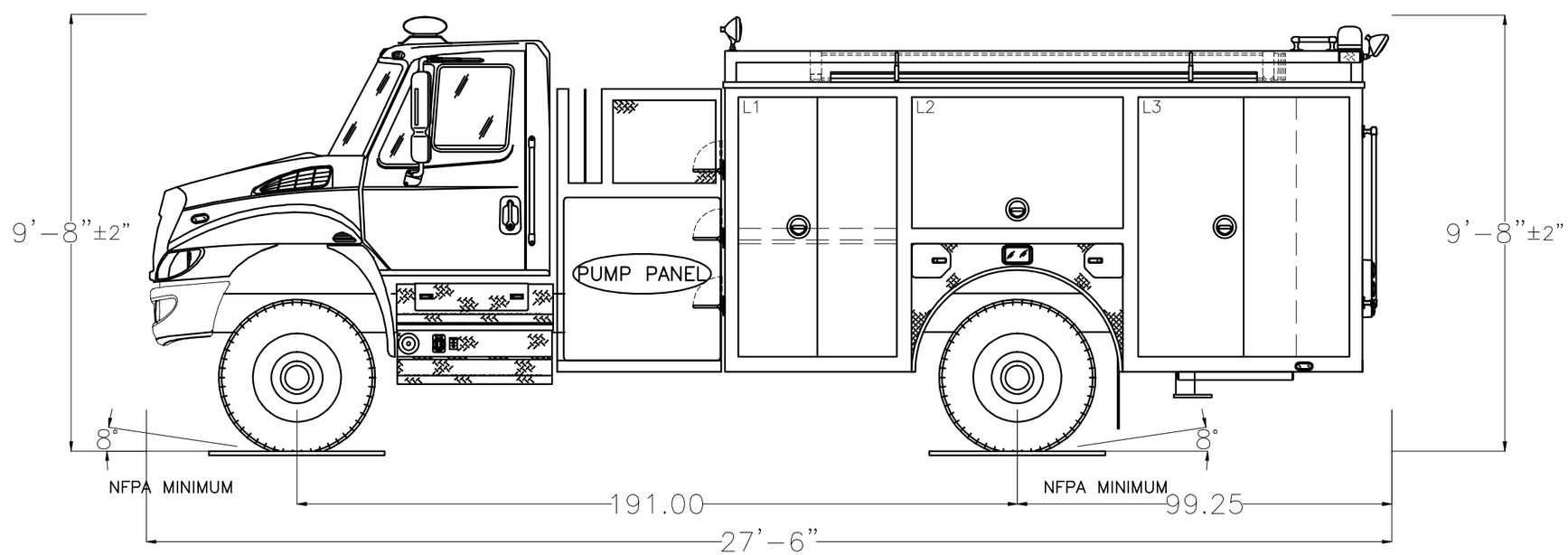

POWERED BY EZDRAW

Notice This drawing provides a GENERAL REPRESENTATION of the vehicle configuration and should be used for evaluation purposes. The respective dimensions shown,including overall height and length, are estimates and may vary due to manufacturing processes. All other items such as lighting and fixtures, plumbing, compartmentation, and other generally assembled details are shown for REFERENCE ONLY and may not be a direct reflection of the final truck configuration. In ALL situations where this drawing may conflict with the specifications, THE SPECIFICATIONS, AS REFLECTED IN THE APPROVED SHOP ORDER, SHALL PREVAIL. Unless otherwise specified, the proposed apparatus will be manufactured to the latest NFPA recommendations as well as other applicable federally regulated safety regulations. E-One reserves the right to engineer and incorporate design improvements and changes without notice, while adhering to the intent of the specification.

HALE QFLO 1250 GPM PUMP
780 TOTAL TANK VOLUME

HOSE LOADS :

	OPENING		INTERIOR DIMENSIONS				
COMPT.	WIDTH	HEIGHT	LOWER WIDTH	LOWER HEIGHT	LOWER DEPTH	UPPER HEIGHT	UPPER DEPTH
L1	42	68.75	42	30	26	38.75	26
L2	56	34.75	56	30	N/A	34.75	26
L3	56	68.75	56	30	26	38.75	26
R1	42	68.75	42	30	26	38.75	12
R2	56	34.75	56	30	N/A	34.75	12
R3	56	68.75	56	30	26	38.75	12
B1	36	53	38	30	26	23	12

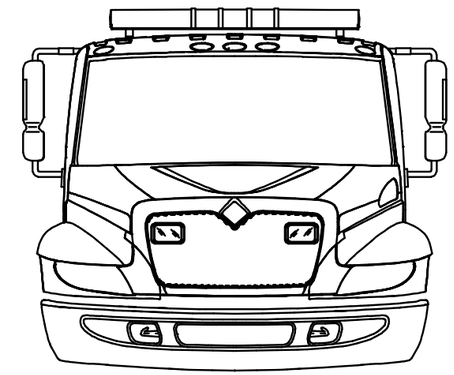

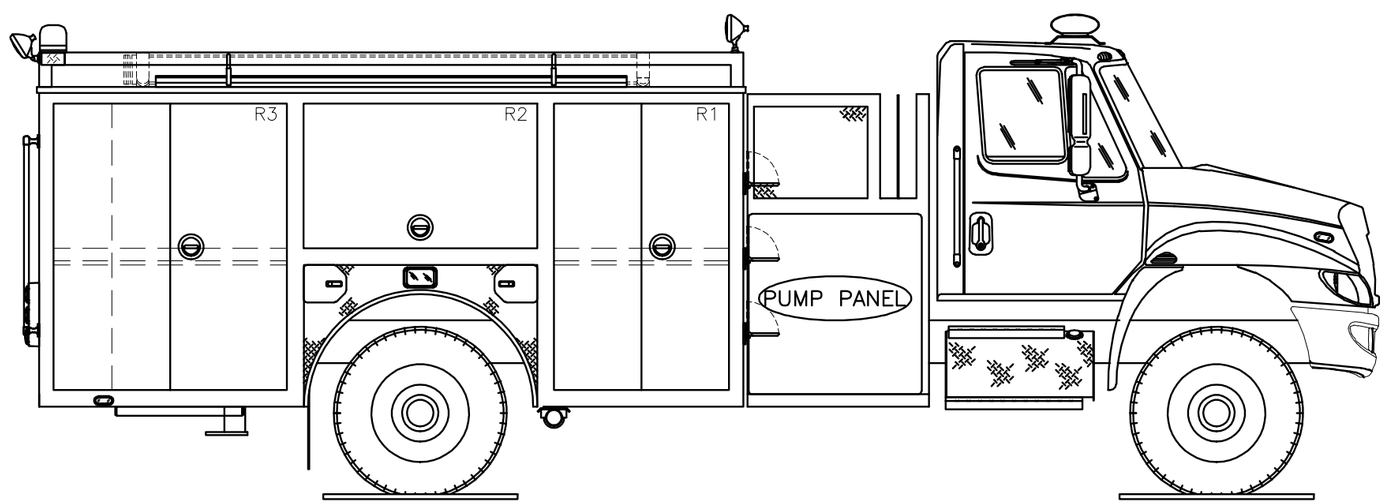

POWERED BY EZDRAW

Fire Apparatus Quotation for:
STATE OF OHIO TERM SCHEDULE

Quotation Number: 35907 Rev: 11

Unit Description: TDPM-TYPH

Quote Description: Tradition Rescue Pumper Custom - Typhoon Chassis Salesperson:

Salescode	Extended Description	Qty	
TESTING COMPLIANCE STANDARD			
1001-0015	The E-ONE supplied components of the vehicle shall meet the requirements of NFPA 1901, 2009 edition.	1	
BUMPERS			
1160-0000	Bumper 10" stainless steel	1	
1160-0011	4" Front Bumper Extension.	1	
FRAME ASSEMBLY			
1250-0011	Rear underbody support frame.	1	
1250-0018	Frame assembly to include 182" wheelbase and 47" framecut.	1	
AXLE OPTIONS			
1025-0003	Meritor FL941 front axle 16,000lb	1	
1025-0016	Meritor RS-24-160 single rear axle 24,000lb capacity	1	
1025-0029	Front Shock absorbers	1	
SUSPENSIONS			
1070-0001	Rear suspension springs rated equal to the capacity of the axle	1	
WHEEL OPTIONS			
1050-0000	Steel wheels for front axle (2).	1	
1050-0002	Steel wheels for rear axle (4).	1	
TIRE OPTIONS			
1060-0001	Two Michelin 315 tires model XZA-1 for front axle	1	
1060-0015	Four Michelin 11R rear tires with Mud and Snow tread	1	
1060-0050	Tire pressure monitoring valve stem caps.	1	

Salescode	Extended Description	Qty	
BRAKE SYSTEMS			
1100-0000	16-1/2" x 6" S-cam brakes with ArvinMeritor automatic slack adjusters for front axle	1	
1100-0002	ArvinMeritor 16-1/2" x 7" S-cam brakes with cast brake drums for a single rear axle	1	
1100-0005	Brake system air 4X2/4X4	1	
1100-0006	Parking brake release mounted on the driver's side lower dash	1	
AIR SYSTEM OPTIONS			
1110-0000-001	Inlet for air system. Location: driver door jamb	1	
1110-0002	Air dryer Bendix AD-9	1	
1110-0006	Air lines nylon	1	
1110-0026	Air horns recessed in bumper (PR)	1	
ENGINES & TRANSMISSIONS			
1200-0017	Push button transmission selector	1	
1200-0020	Trans Synd synthetic transmission fluid for EVS 3000.	1	
1200-0097	Electronically limited speed to 68 MPH maximum. Note: Max speed may be set at 65 MPH due to tire rating.	1	
1200-0124	Eng/Trans Cummins ISC 330HP/EVS3000 2010 EPA compliant engine.	1	
SECONDARY BRAKING			
1125-0002	Brake Jacob's engine compression	1	
COOLING PACKAGE			
1800-0013	Cooling system for use with Cyclone II X, Typhoon X, and Quest chassis. For use with 2010 EPA engines. Includes coolant recovery system.	1	
FUEL SYSTEMS			
1350-0003	Fuel system 50 gallon	1	
1350-0013	Fuel water Racor separator to be a bottom drop out style. Shall include indicator light and audible alarm.	1	
1350-0022	Fuel line hose rubber.	1	
ALTERNATOR			
1700-0003	Alternator Leece Neville. (270 amp SAE/240 NFPA rating).	1	
BATTERIES			
1400-0002	Battery four group 31 1000CCA	1	

Salescode	Extended Description	Qty	
CHASSIS OPTIONS			
1680-0006	Drivelines 1710	1	
1680-0011	Tow eyes rear below body painted	1	
1680-0042	Tow hooks front painted in the down position.	1	
1680-0145-J74	Diesel Exhaust Fluid (DEF) 5 gallon tank. Location: R1 floor offset forward.	1	
CAB MODEL			
1520-0013	Typhoon X medium cab with 58" CA	1	
CAB ROOF TYPE			
1615-0010	Cab roof to be "flat" (non-vista).	1	
CAB BADGE PACKAGE			
1610-0000	Cab and body to have applicable E-ONE logos.	1	
GRILLE			
1620-0004	ABS chrome plated grille.	1	
CAB DOOR OPTIONS			
1550-0003	Rear crew cab doors in the medium position.	1	
1550-0005	Driver and Officer cab door windows. Include forward vent window.	1	
1550-0011	Rear crew cab door windows. Includes manual roll-down actuation. Not available with paddle style door latching.	1	
1550-0016	Door panels cab ABS	1	
1550-0025	All cab doors shall have "L" style exterior latches.	1	
1550-0027	Front cab door windows to manually roll up.	1	
1550-0037-659	(4) Incandescent cab step area lighting. Locate each light in on each cab door in the inboard position. Lights to be switched with door ajar.	1	
1550-0044	All cab door kick plates to be made from diamond plate aluminum.	1	
1550-0059-000-72	Reflective Yellow/Red striping positioned in the "A" formation located in the lower cab door panels	1	
MIRRORS			
1670-0038	Lang Mekra mirrors w/LED marker lights and turn signals, remote, heated and convex pair.	1	
MISC EXTERIOR CAB OPTIONS			
1550-0020	Windows cab side fixed driver's side	1	

Salescode	Extended Description	Qty	
MISC EXTERIOR CAB OPTIONS			
1550-0033	Windows cab side fixed officer's side	1	
1675-0022	Pair of 18" handrails located just behind driver and officer front door one each side	1	
1675-0023	Pair of 18" handrails located just behind driver and officer rear door (ALS doors if equipped) one each side.	1	
1675-0030	Mud flaps, front, black with E-ONE logo.	1	
1675-0047	Rear cab wall to be 3/16" aluminum diamond plate.	1	
HVAC			
1515-0017	Air conditioning for the Typhoon X, CII X and Quest with Cummins ISC/ISL engine, radiator mounted condensor.	1	
SEATS			
1510-0003	Seats 911 Brand.	1	
1510-0007	Seat cover material vinyl.	1	
1510-0008	Seat color gray	1	
1510-0035-147	Universal air pack bottle bracket (EA). Location: officer's seat	1	
1510-0035-148	Universal air pack bottle bracket (EA). Location: rear facing driver's side	1	
1510-0035-215	Universal air pack bottle bracket (EA). Location: rear facing officer's side	1	
1510-0038	Driver seat 911 air ride.	1	
1510-0042	Officer seat to be 911 fixed SCBA	1	
1510-0050	Rear facing 911 seat with SCBA driver's side	1	
1510-0053	Rear facing 911 seat with SCBA officer's side	1	
1685-0031	Seating capacity tag of four occupants.	1	
MISC INTERIOR CAB OPTIONS			
1685-0000	Cab interior gray. Does not include engine cover or seat color.	1	
1685-0005	Lexan sun visors, driver and officer's side overhead	1	
1685-0057	Heater Rear with Cover (PR) and front heater with heat to the feet for the driver and officer	1	
CAB ELECTRICAL OPTIONS			
1750-0019	Battery charger Super Smart 110 volt, 20 amp.	1	
1750-0029	Switch horn button two position DOT/air horn	1	
1750-0046-195	Cab Headlights. Position: lower	1	
1750-0059-179-04	Receptacle inlet 20amp with a Yellow cover. Location: outside driver's door next to	1	

Salescode	Extended Description	Qty	
CAB ELECTRICAL OPTIONS			
	handrail		
1750-0075	English dominant main cab gauge cluster.	1	
1750-0083-172	Turn signal Federal Signal QuadraFlare QL64Z-ARROW LED amber pair located upper headlight bezel	1	
1750-0188	DPF Regeneration override switch.	1	
1750-0198-A31	Battery charger to be located behind driver's seat.	1	
5400-0037	Dome Lts Red/White Incandescent. Package includes two lights mounted in the front and two mounted in the rear of the cab. White light wire through door and light assembly mounted switch. Red light through light assembly mounted switch.	1	
BODY COMPT LEFT SIDE			
3100-0153	Driver side body with full height 42" wide forward and 56" wide rearward enhanced extended compartmentation. Includes (1) 56" wide compartment over the wheel well.	1	
BODY COMPT RIGHT SIDE			
3120-0283	Officer side body with full height 42" wide forward and 56" wide rearward enhanced extended compartmentation. Includes (1) 56" wide compartment over the wheel well and one (1) storage tunnel.	1	
BODY COMPT REAR			
3110-0013	Full Height Rear Compartment with Officer Side Storage Tunnel. Includes smooth plate panels and storage access door with push button latch.	1	
3110-0052	Bolt-on diamond plate tailboard (full width of rear compartment). Includes the enhanced extended side compartment frame work and handrails- (2) vertically on trailing edge of body and horizontally mounted handrail(s) below hosebed.	1	
3110-0092	Enhanced Extended Compartmentation stepped down below hosebed level. Includes embossed diamond plate compartment tops.	1	
DOORS			
3300-0011-004	Door single horizontally hinged lift-up painted. Location(s): L2	1	
3300-0011-016	Door single horizontally hinged lift-up painted. Location(s): R2	1	
3300-0019-027	Door roll up tall (greater than 45") with satin finish ROM. Location(s): B1	1	
3300-0030-003	Door double 3-point vertically hinged painted. Location(s): L1	1	
3300-0030-005	Door double 3-point vertically hinged painted. Location(s): L3	1	
3300-0030-015	Door double 3-point vertically hinged painted. Location(s): R1	1	
3300-0030-017	Door double 3-point vertically hinged painted. Location(s): R3	1	

Salescode	Extended Description	Qty	
SHELVES			
3370-0025-101	Permanent shelf. Locate in R1 at offset (above extrusion if applicable).	1	
3370-0025-102	Permanent shelf. Locate in R3 at offset (above extrusion if applicable).	1	
COVERS			
3305-0007-000-02	Vinyl Red hosebed cover with attached rear flap(s).	1	
3305-0008-000-02	Vinyl Red crosslay cover with attached side flaps.	1	
PUMP MODULE			
3130-0166	Pump Module to be 72" wide (side to side). Includes upper, lower, crosswalk, speedlay and tranverse module(s) if applicable.	1	
3130-0192	Side Mount Pump Module. Includes area for single stacked double crosslay (notched divider).	1	
PUMP PANELS			
3134-0011	Officer side pump panel to be vertically hinged on forward extrusion. Panel(s) to be secured in the closed position with push button latches. Upper panel to be held open with gas shock.	1	
3134-0016	Stainless steel driver and officer side pump panels.	1	
3134-0050	The gauge panel is to swing downward/forward for access to electrical connections on panel. Includes two (2) cable hold opens, and push button latches.	1	
MISC PUMP PANEL OPTIONS			
4460-0003	Pump Panel Tags Color Coded per NFPA Compliance	1	
4460-0034	Cab jack access door. Located on officer side pump panel in upper rearward area. Includes twist and turn latch.	1	
PUMP MODULE OPTIONS			
3136-0040	Module mainframe for use with Typhoon chassis.	1	
WATER TANK			
4010-0036	780 Gallon "R" Water Tank. Note: Any foam cell(s) and/or storage options thru the tank will reduce the overall water capacity. Tank capacity is 780 US gallon / 649 Imperial gallons / 2952 Liters.	1	
TANK PLUMBING			
4450-0010	2" Tank Fill Akron Manual Valve	1	
4450-0119	3" Tank To Pump Akron Manual Valve w/4" Plumbing	1	
LADDER STORAGE / RACKS			

Salescode	Extended Description	Qty	
LADDER STORAGE / RACKS			
3365-0028	Hard Suction Storage Rack. Driver side compartment top. Includes spring hold downs and scuff plates behind spring mounts (as applicable).	1	
3365-0035	Hard Suction Storage Rack. Officer side compartment top. Includes spring hold downs and scuff plates behind spring mounts (as applicable).	1	
3365-0049	Brand of ladders capable of being carried on unit to be Alco-Lite.	1	
3365-0087-C57	The length of ladder(s) capable of being stored to be the following length: 24' 2-Section and 14' roof ladder.	1	
3365-0149-I32	Storage tunnel capable of holding: (1) 2-Section, (1) Roof, (1) Attic, (2) pike poles in Officer Side Storage Tunnel.	1	
HANDRAILS / STEPS			
3330-0053-060	Folding Step. Location officer side front compartment face. Step include integral lights. Each location requires a minimum of (1) handrail per NFPA.	3	
3330-0053-062	Folding Step. Location driver side front compartment face. Step include integral lights. Each location requires a minimum of (1) handrail per NFPA.	3	
3330-0054	Steps rear NFPA. Steps include integral lights. Includes folding steps on driver side (staggered stepped as applicable with tailboard depth) for NFPA hosebed access and handrail mounted on driver side upper hosebed side (as applicable).	1	
MISC BODY OPTIONS			
3090-0002	The unit has no overall height restrictions.	1	
3090-0004	The unit has no overall length restrictions.	1	
3090-0007	The hosebed is to have a NFPA capacity.	1	
3340-0004	Hosebed above the booster tank. Includes forward hosebed and tower(s) cover plate work. Hosebed adjustable divider extrusion rearward of the furthest tower is to run full width of the hosebed.	1	
3340-0015	Diamond plate single axle wheel well. Includes bolt-on composite wheel well liners and aluminum fenderettes.	1	
3340-0035	Divider Long. To run full length of hosebed (front to rear).	1	
3340-0058	Recessed fuel fill driver side wheel well.	1	
3340-0074	Body mainframe and hosebed side assemblies for a 85" high body.	1	
3340-0093	Mud flaps, rear, black with E-ONE logo.	1	
3340-0110	The rear of each hosebed divider to have a hand hold cutout.	1	
3340-0145	Rubrail for the body and pump area module(s).	1	
SCBA BOTTLE STORAGE			
3320-0020	SCBA Bottle Storage. (4) Fire Shopp SCBA bottle storage with hinged doors with	1	

Salescode	Extended Description	Qty	
SCBA BOTTLE STORAGE			
	push button latches. (2) officer side and (2) driver side in wheel well area.		
PUMPS			
4005-0030	Rating 1250 GPM	1	
4005-0054	Hale Qflo-23L 1250 pump. Tradition.	1	
PUMP CERTIFICATION			
4475-0000	Pump certification 750-2250 GPM	1	
PUMP OPTIONS			
4015-0053-198	Steamers to be Flush + 1 Location: driver's side.	1	
4015-0053-199	Steamers to be Flush + 1 Location: officer's side.	1	
4015-0101	Pump Cooler	1	
INTAKES			
4440-0005	2.5" Left Intake Akron Manual Valve	1	
INTAKE OPTIONS			
4445-0016	Valve Relief Intake - Hale 2.5"	1	
DISCHARGES AND PRECONNECTS			
4415-0012-654	1.5" Crosslay with Akron Manual Valve. Location: crosslay 1 & 2	2	
4415-0022-350	2.5" Left Rear Discharge Akron Manual Valve Location: left rear discharge	1	
4415-0041	3" Deck Gun Discharge Akron Manual Valve	1	
4415-0161-581	2.5" Left Panel Discharge Akron Manual Valve w/30 Degree Droop Location: left side discharge 1	1	
4415-0161-582	2.5" Left Panel Discharge Akron Manual Valve w/30 Degree Droop Location: left side discharge 2	1	
4415-0164-583	2.5" Right Panel Discharge Akron Manual Valve w/30 Degree Droop Location: right side discharge 1	1	
4415-0164-584	2.5" Right Panel Discharge Akron Manual Valve w/30 Degree Droop Location: right side discharge 2	1	
DISCHARGE OPTIONS			
4417-0058-350	Bleeder Drain Valve Plumbed to: left rear discharge	1	
4417-0058-573	Bleeder Drain Valve Plumbed to: crosslay preconnect	2	
4417-0058-575	Bleeder Drain Valve Plumbed to: left discharge	2	

Salescode	Extended Description	Qty	
DISCHARGE OPTIONS			
4417-0058-576	Bleeder Drain Valve Plumbed to: right discharge	2	
4417-0101-356	Valve Drain Automatic. For: deck gun	1	
PRESSURE GOVERNORS			
4465-0005	Class1 Captain pressure governor.	1	
GAUGES			
4435-0001	Class 1 Intelli-Tank Water Tank Level Gauge	1	
4435-0013	Class 1 Pressure 4.5" Gauge (30-0-600 PSI)	2	
4435-0015-350	2.5" Class 1 Pressure Gauge (30-0-600). Discharge: left rear discharge	1	
4435-0015-352	2.5" Class 1 Pressure Gauge (30-0-600). Discharge: 1.5 in. crosslay preconnect	2	
4435-0015-356	2.5" Class 1 Pressure Gauge (30-0-600). Discharge: deck gun	1	
4435-0015-581	2.5" Class 1 Pressure Gauge (30-0-600). Discharge: left side discharge 1	1	
4435-0015-582	2.5" Class 1 Pressure Gauge (30-0-600). Discharge: left side discharge 2	1	
4435-0015-583	2.5" Class 1 Pressure Gauge (30-0-600). Discharge: right side discharge 1	1	
4435-0015-584	2.5" Class 1 Pressure Gauge (30-0-600). Discharge: right side discharge 2	1	
4435-0069	Enfo IV System on Pump Operator's Panel	1	
ELECTRICAL SYSTEMS			
5010-0002	Multiplex electrical system for pumper / tanker / rescue.	1	
5010-0003	Multiplex modem kit. Includes cable, modem, and adapter harness.	1	
5010-0004	Multiplex Data Logger	1	
5010-0013-E91	Vehicle data recorder - 2009 NFPA compliant. Includes occupant detection with display. Display location: Driver side of center dash electrical cover.	1	
LIGHT BARS			
5300-0021	Light bar Federal Signal JetStream 60" LED. Red Solaris reflectors with clear domes. NFPA Compliant, does not require 2 addl side facing bars. Location: Centered on the front cab roof	1	
WARNING LIGHT PACKAGES			
5550-0057-535	Federal Signal QuadraFlare LED lower level warning light package. Includes (8) QL64XF-R LED light heads with bezels and (2) Model 3300-04 LED light heads. Locate side facing lights: at forward most position, centered in rear wheelwell, and side facing at rear of body in rubrail if equipped.	1	
5550-0067	Flash rate for Federal QuadraFlare LED lower level warning lights to be set at	1	

Salescode	Extended Description	Qty	
WARNING LIGHT PACKAGES			
	pattern 4, alternating quad flash (75 QFPM).		
WARNING LIGHTS			
5600-0034-479-09	Federal Model SY12FS Sentry (PR) with driver amber, officer red domes. Location: rear upper body on aerial style brackets.	1	
5600-0149-170	Hazard (door ajar) light 2.5" incandescent. Location: center overhead	1	
SIRENS			
5500-0009	Federal PA300 siren recessed mounted.	1	
5500-0024-170	The electronic siren control is to be located on the center overhead.	1	
SPEAKERS			
5510-0029-209	Speaker Federal Dynamax ES100-EF thru bumper. Location: driver side front bumper.	1	
DOT LIGHTING			
5150-0017	License plate light LED with chrome housing located at the rear of the body.	1	
5150-0025	Marker light LED body/cab package. E-One custom cab and pumper or tanker body only.	1	
5150-0059	Federal Signal QuadraFlare LED vertical mount taillights. Includes LED stop/tail, arrow turn and backup lights with vertical Cast 3 housing and weatherproof connectors.	1	
LIGHTS - COMPARTMENT, STEP & GROUND			
5380-0009	Compartment light package incandescent for medium bodies.	1	
5380-0027	Ground light package for cab and body - small.	1	
LIGHTS - DECK AND SCENE			
5390-0000-395	Deck Light - Unity 12V (PR) Location: rear body/beavertail area on the trailing edge up high	1	
5390-0001	Hosebed Light Unity. Locate at front area of hosebed. Switched with work light switch in cab	1	
LIGHTS - NON-WARNING			
5400-0003	Engine Compartment Light (EA).	1	
5400-0010	Incandescent pump compartment light (EA).	1	
5400-0039	Spotlight Specialty 2150 hand held located on officer's side of cab dash - hardwired.	1	

Salescode	Extended Description	Qty	
CONTROLS / SWITCHES			
5100-0000-199	Foot Switch to control air horns located officer's side	1	
5100-0007-198	Foot Switch to control electronic siren located driver's side	1	
MISC ELECTRICAL			
5110-0017	Back up alarm 97 dB(A).	1	
HAND TOOLS			
7600-0005	Pike Pole Fiberglass 6'	1	
7600-0007	Pike Pole Fiberglass 10'	1	
HOSE / NOZZLES			
7700-0004	Hard Suction Hose 6" with Pyrolite Couplings	2	
GROUND LADDERS			
7800-0007	Alco-Lite PRL-14 Roof Ladder	1	
7800-0016	Alco-Lite PEL-24 Extension Ladder	1	
7800-0032	Alco-Lite 10' Folding Ladder w/Shoes - FL10 Alco-Lite 10FT folding aluminum ladder with safety shoes.	1	
MISC LOOSE EQUIPMENT			
7900-0010	Chrome Barrel Strainer 6"	1	
7900-0014	DOT Required Drive Away Kit - Kit includes three (3) triangular warning reflectors with carrying case. This kit is for the end user and is to remain with the truck.	1	
EXTERIOR PAINT			
8100-0089	All applicable pump/pre-connect application modules are to have a sanded finish (not painted job color). Includes upper and lower pump modules, crosswalk module and/or speedlay/pre-connect module (as applicable). Rear mounted body/pump module to be painted job color.	1	
8100-0116	Rear body surface to have a sanded finish (not painted job color). Includes hinged doors that do not have discrete sales codes and removable panels.	1	
8100-0176-000-17	Paint E-One chassis cab - Sikkens paint. Color: FLNA3225 Red.	1	
8100-0182-000-17	Paint Body - Small - For Pumpers, Rear Mounts, S/A Tankers and Rescues. Sikkens paint. Color: FLNA3225 Red.	1	
8100-0186-000-39	Paint exterior surface of outer steel wheels. Sikkens paint. Color: Job Color.	1	
INTERIOR PAINT			
8150-0010	The interior of the cab to be paint OTO gray	1	

Salescode	Extended Description	Qty	
STRIPING			
8300-0002-333-12	NFPA Scotchlite Stripe - 4" wide and straight on front/sides of cab and sides/rear of body. Color: White. Location: top of stripe flush with top of bumper and straight back.	1	
8300-0042	White rubrail scotchlite insert.	1	
8300-0084-000-72	Chevron "A" style 6" printed sheet Scotchlite striping on rear of body. Includes rear facing extrusions, panels and doors inboard/outboard of the beavertails(if applicable). Colors to be Yellow/Red.	1	
WARRANTY / STANDARD & EXTENDED			
9100-0000	Standard 1 Year Warranty	1	
9100-0003	Lifetime Frame Warranty	1	
9100-0004	10 Year/100,000 Mile Structural Warranty - Statement of Warranty	1	
9100-0005	10 Year Stainless Steel Plumbing Warranty - Statement of Warranty	1	
9100-0019	10 Year Limited Paint and Perforation Warranty - For Sikkens Paint	1	
SUPPORT, DELIVERY, INSPECTIONS AND MANUALS			
9300-0009	Manuals, Operator and Service CD-ROM.	1	
9300-0036	Tradition drive away.	1	
PRICE			$289,117.

STATE OF OHIO TERM SCHEDULE

4200 SURFACE RD
COLUMBUS, OH 43228

Quote No: 35907

12/7/2009

Quote Rev:11 Drawing Rev:1

Note: Hosebed height may not be the correct measurement for this combo. Compartment height may change.

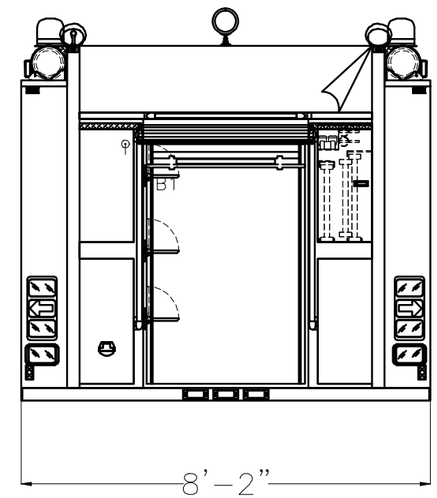

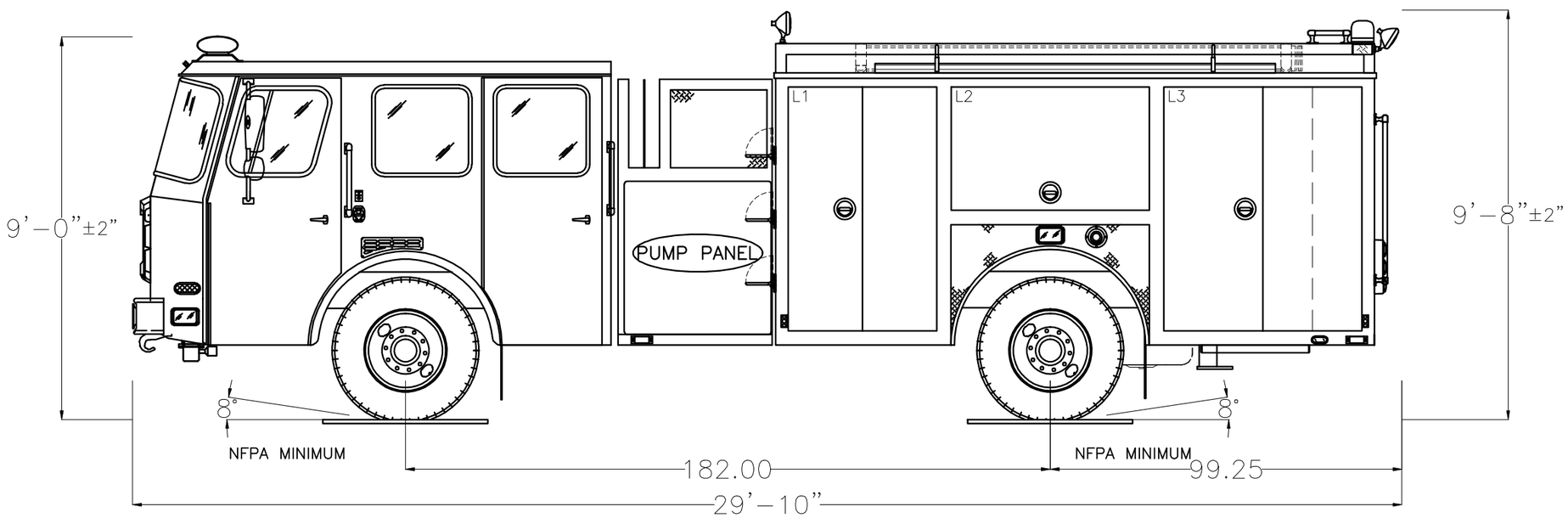

POWERED BY EZDRAW

Notice: This drawing provides a GENERAL REPRESENTATION of the vehicle configuration and should be used for evaluation purposes. The respective dimensions shown,including overall height and length, are estimates and may vary due to manufacturing processes. All other items such as lighting and fixtures, plumbing, compartmentation, and other generally assembled details are shown for REFERENCE ONLY and may not be a direct reflection of the final truck configuration. In ALL situations where this drawing may conflict with the specifications, THE SPECIFICATIONS, AS REFLECTED IN THE APPROVED SHOP ORDER, SHALL PREVAIL. Unless otherwise specified, the proposed apparatus will be manufactured to the latest NFPA recommendations as well as other applicable federally regulated safety regulations. E-One reserves the right to engineer and incorporate design improvements and changes without notice, while adhering to the intent of the specification.

HALE QFLO 1250 GPM PUMP
780 TOTAL TANK VOLUME

HOSE LOADS :

	OPENING		INTERIOR DIMENSIONS				
COMPT.	WIDTH	HEIGHT	LOWER WIDTH	LOWER HEIGHT	LOWER DEPTH	UPPER HEIGHT	UPPER DEPTH
L1	42	68.75	42	30	26	38.75	26
L2	56	34.75	56	30	N/A	34.75	26
L3	56	68.75	56	30	26	38.75	26
R1	42	68.75	42	30	26	38.75	12
R2	56	34.75	56	30	N/A	34.75	12
R3	56	68.75	56	30	26	38.75	12
B1	36	53	38	30	26	23	12

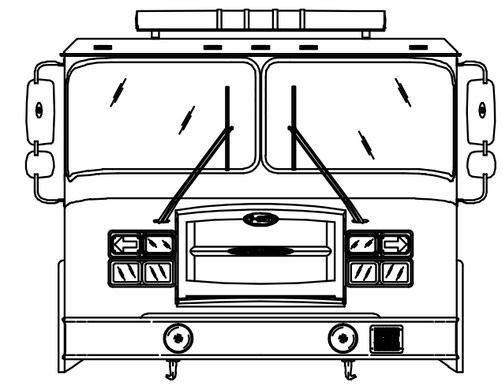

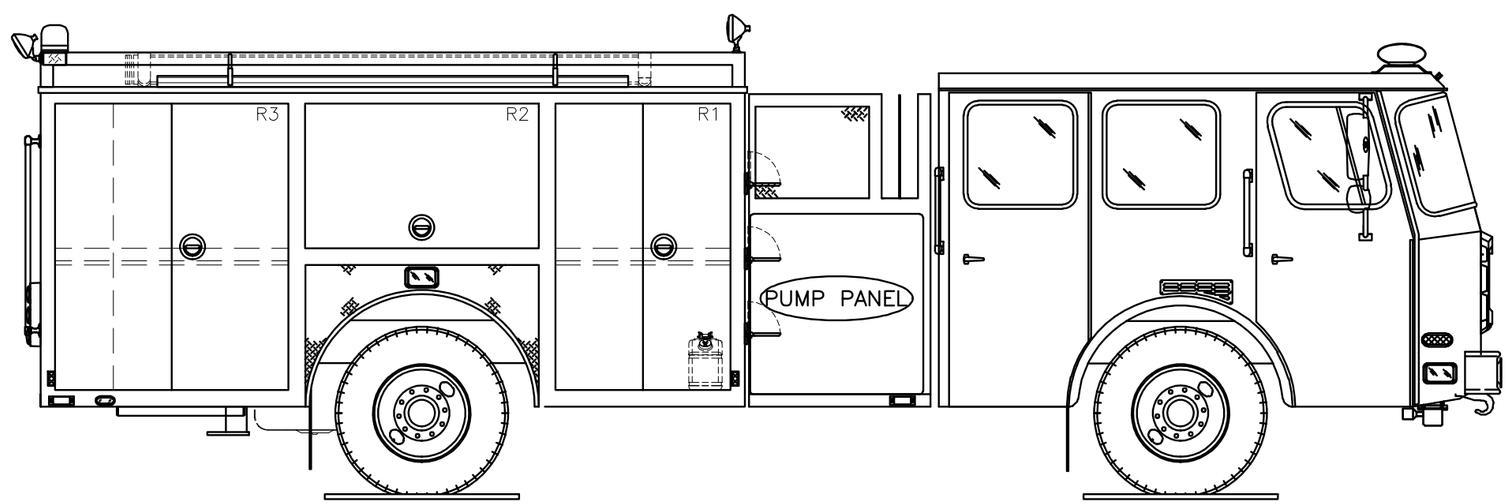

POWERED BY EZDRAW

COMMERCIAL CHASSIS - TRADITION PUMPER

1000	CHASSIS		
1005-0107	International 7400 4 door, 250" WB & 47" frame cut, front tow hooks, 14K & 26K axles, ABS brakes, 1228 sq. in. radiator, 50 gal RH fuel tank, EVS3000 trans., (3) 1950 CCA batteries, 270 alternator, ember separator, AC and seating indicator pre-wiring..	INT	83,787.00
1005-0108	M2 (2) door, 184" WB & 41" frame cut, front tow hooks, 12K & 23K axles, ABS brakes, 1100 sq.in. radiator, 50 gal. left hand fuel tank, EVS3000 transmission, (2) 1850CCA batteries, 270 alternator, ember separator, AC. 294-046 Separate taillight programming.	FL	63,931.00
1005-0109	M2 2 door, 204" WB 41" frame cut, front tow hooks, 12K & 23K axles, ABS brakes, 1100 sq. in. radiator, 50 gal. LH fuel tank, EVS3000 trans., (2) 1850 CCA batteries, 270 alternator, ember separator and AC. 294-046 Separate taillight programming.	FL	64,227.00
1005-0110	M2 (2) door, 218" WB & 41" frame cut, front tow hooks, 12K & 23K axles, ABS brakes, 1100 sq.in. radiator, 50 gal. left hand fuel tank, EVS3000 transmission, (2) total 1850CCA batteries, 270 alternator, ember separator and AC. 294-046 Separate taillight programming.	FL	64,786.00
1005-0111	M2 (4) door, 231" WB & 41" frame cut, front tow hooks, 12K & 23K axles, ABS brakes, 1100 sq.in. radiator, 50 gal. left hand fuel tank, EVS3000 transmission, (2) 1850CCA batteries, 270 alternator, ember separator and AC. 294-046 Separate taillight programming.	FL	75,247.00
1005-0113	M2 (4) door, 251" WB 41" frame cut, front tow hooks, 12K & 23K axles, ABS brakes, 1100 sq. in. radiator, 50 gal. LH fuel tank, EVS3000 trans., (2) 1850 CCA batteries, 270 alternator, ember separator and AC. 294-046 Separate taillight programming.	FL	75,383.00
1005-0114	M2 (4) door, 265" WB 41" frame cut, front tow hooks, 12K & 23K axles, ABS brakes, 1100 sq. in. radiator, 50 gal. LH fuel tank, EVS3000 trans., (2) 1850 CCA batteries, 270 alternator, ember separator and AC. 294-046 Separate taillight programming.	FL	75,383.00
1005-0115	M2 (2) door, 190" WB & 47" frame cut, front tow hooks, 12K & 23K axles, ABS brakes, 1100 sq.in. radiator, 50 gal. left hand fuel tank, EVS3000 transmission, (2) 1850CCA batteries, 270 alternator, ember separator and AC. 294-046 Separate taillight programming.	FL	64,227.00
1005-0116	M2 (2) door, 210" WB 47" frame cut, front tow hooks, 12K & 23K axles, ABS brakes, 1100 sq. in. radiator, 50 gal. LH fuel tank, EVS3000 trans., (2) 1850 CCA batteries, 270 alternator, ember separator and AC. 294-046 Separate taillight programming.	FL	64,786.00
1005-0117	M2 (2) door, 224" WB & 47" frame cut, front tow hooks, 12K & 23K axles, ABS brakes, 1100 sq. in. radiator, 50 gal. LH fuel tank, EVS3000 trans., (2) 1850 CCA batteries, 270 alternator, ember separator and AC. 294-046 Separate taillight programming.	FL	64,786.00
1005-0118	M2 (4) door, 237" WB & 47" frame cut, front tow hooks, 12K & 23K axles, ABS brakes, 1100 sq.in. radiator, 50 gal. left hand fuel tank, EVS3000 transmission, (2) 1850CCA batteries, 270 alternator, ember separator and AC. 294-046 Separate taillight programming.	FL	75,383.00
1005-0119	M2(4) door, 257" WB & 47" frame cut, front tow hooks, 12K & 23K axles, ABS brakes, 1100 sq. in. radiator, 50 gal. LH fuel tank, EVS3000 trans., (2) 1850 CCA batteries, 270 alternator, ember separator and AC. 294-046 Separate taillight programming.	FL	75,383.00
1005-0120	M2 4 door, 272" WB & 47" frame cut, front tow hooks, 12K & 23K axles, ABS brakes, 1100 sq. in. radiator, 50 gal. LH fuel tank, EVS3000 trans., (2) 1850 CCA batteries, 270 alternator, ember separator and AC. 294-046 Separate taillight programming.	FL	74,932.00
1005-0121	M2 (2) door, 184" WB & 41" frame cut, front tow hooks, 12K & 26K axles, ABS brakes, 1100 sq.in. radiator, 50 gal. left hand fuel tank, EVS3000 transmission, (2) 1850CCA batteries, 270 alternator, ember separator and AC. 294-046 Separate taillight programming.	FL	69,702.00
1005-0122	M2 (2) door, 204" WB & 41" frame cut, front tow hooks, 12K & 26K axles, ABS brakes, 1100 sq.in. radiator, 50 gal. left hand fuel tank, EVS3000 transmission, (2) 1850CCA batteries, 270 alternator, ember separator and AC. 294-046 Separate taillight programming.	FL	70,014.00
1005-0123	M2 (2) door, 218" WB & 41" frame cut, front tow hooks, 12K & 26K axles, ABS brakes, 1100 sq.in. radiator, 50 gal. left hand fuel tank, EVS3000 transmission, (2) 1850CCA batteries, 270 alternator, ember separator and AC. 294-046 Separate taillight programming.	FL	70,555.00
1005-0124	M2 (4) door, 231" WB & 41" frame cut, front tow hooks, 12K & 26K axles, ABS brakes, 1100 sq.in. radiator, 50 gal. left hand fuel tank, EVS3000 transmission, (2) 1850CCA batteries, 270 alternator, ember separator and AC. 294-046 Separate taillight programming.	FL	81,160.00
1005-0125	M2 (4) door, 251" WB & 41" frame cut, front tow hooks, 12K & 26K axles, ABS brakes, 1100 sq.in. radiator, 50 gal. left hand fuel tank, EVS3000 transmission, (2) 1850CCA batteries, 270 alternator, ember separator and AC. 294-046 Separate taillight programming.	FL	81,296.00
1005-0126	M2 (4) door, 265" WB & 41" frame cut, front tow hooks, 12K & 26K axles, ABS brakes, 1100 sq.in. radiator, 50 gal. left hand fuel tank, EVS3000 transmission, (2) 1850CCA batteries, 270 alternator, ember separator and AC. 294-046 Separate taillight programming.	FL	81,296.00
1005-0127	M2 (2) door, 190" WB & 47" frame cut, front tow hooks, 12K & 26K axles, ABS brakes, 1100 sq.in. radiator, 50 gal. left hand fuel tank, EVS3000 transmission, (2) 1850CCA batteries, 270 alternator, ember separator and AC. 294-046 Separate taillight programming.	FL	69,999.00
1005-0128	M2 (2) door, 210" WB & 47" frame cut, front tow hooks, 12K & 26K axles, ABS brakes, 1100 sq.in. radiator, 50 gal. left hand fuel tank, EVS3000 transmission, (2) 1850CCA batteries, 270 alternator, ember separator and AC. 294-046 Separate taillight programming.	FL	70,571.00
1005-0129	M2 (2) door, 224" WB & 47" frame cut, front tow hooks, 12K & 26K axles, ABS brakes, 1100 sq.in. radiator, 50 gal. left hand fuel tank, EVS3000 transmission, (2) 1850CCA batteries, 270 alternator, ember separator and AC. 294-046 Separate taillight programming.	FL	70,555.00
1005-0130	M2 (4) door, 237" WB & 47" frame cut, front tow hooks, 12K & 26K axles, ABS brakes, 1100 sq.in. radiator, 50 gal. left hand fuel tank, EVS3000 transmission, (2) 1850CCA batteries, 270 alternator, ember separator and AC. 294-046 Separate taillight programming.	FL	81,296.00
1005-0131	M2 (4) door, 257" WB & 47" frame cut, front tow hooks, 12K & 26K axles, ABS brakes, 1100 sq.in. radiator, 50 gal. left hand fuel tank, EVS3000 transmission, (2) 1850 CCA batteries, 270 alternator, ember separator and AC. 294-046 Separate taillight programming.	FL	81,296.00

1005-0132	M2 (4) door, 272" WB & 47" frame cut, front tow hooks, 12K & 26K axles, ABS brakes, 1100 sq.in. radiator, 50 gal. left hand fuel tank, EVS3000 transmission, (2) 1850 CCA batteries, 270 alternator, ember separator and AC. 294-046 Separate taillight programming.	FL	81,079.00
1005-0134	International 4400 (2) door, 185" WB & 41" frame cut, front tow hooks, 12K & 23K axles, ABS brakes, 816 sq. in. radiator, 50 gal right hand fuel tank, EVS3000 transmission, (3) 1950CCA batteries, 320 alternator, ember separator and AC.	INT	69,102.00
1005-0135	International 4400 (2) door, 205" WB & 41" frame cut, front tow hooks, 12K & 23K axles, ABS brakes, 816 sq. in. radiator, 50 gal right hand fuel tank, EVS3000 transmission, (3) 1950CCA batteries, 320 alternator, ember separator and AC.	INT	69,102.00
1005-0136	International 4400 (2) door, 219" WB & 41" frame cut, front tow hooks, 12K & 23K axles, ABS brakes, 816 sq. in. radiator, 50 gal right hand fuel tank, EVS3000 transmission, (3) 1950CCA batteries, 320 alternator, ember separator and AC.	INT	69,102.00
1005-0137	International 4400 (4) door, 230" WB & 41" frame cut, front tow hooks, 12K & 23K axles, ABS brakes, 816 sq. in. radiator, 50 gal RH fuel tank, EVS3000 trans., (3) 1950 CCA batteries, 320 alternator, ember separator and AC.	INT	75,701.00
1005-0138	International 4400 (2) door, 191" WB & 47" frame cut, front tow hooks, 12K & 23K axles, ABS brakes, 816 sq. in. radiator, 50 gal RH fuel tank, EVS3000 trans., (3) 1950 CCA batteries, 320 alternator, ember separator and AC.	INT	69,102.00
1005-0139	International 4400 (2) door, 211" WB & 47" frame cut, front tow hooks, 12K & 23K axles, ABS brakes, 816 sq. in. radiator, 50 gal RH fuel tank, EVS3000 trans., (3) 1950 CCA batteries, 320 alternator, ember separator and AC.	INT	69,102.00
1005-0140	International 4400 (2) door, 226" WB & 47" frame cut, front tow hooks, 12K & 23K axles, ABS brakes, 816 sq. in. radiator, 50 gal RH fuel tank, EVS3000 trans., (3) 1950 CCA batteries, 320 alternator, ember separator and AC.	INT	69,102.00
1005-0141	International 4400 (4) door, 236" WB & 47" frame cut, front tow hooks, 12K & 23K axles, ABS brakes, 1000 sq. in. radiator, 50 gal RH fuel tank, EVS3000 trans., (3) 1950 CCA batteries, 320 alternator, ember separator and AC.	INT	75,701.00
1005-0142	International 4400 (2) door, 185" WB & 41" frame cut, front tow hooks, 12K & 26K axles, ABS brakes, 816 sq. in. radiator, 50 gal. right hand fuel tank, EVS3000 transmission, (3) 1950CCA batteries, 320 alternator, ember separator and AC.	INT	72,136.00
1005-0143	International 4400 (2) door, 205" WB & 41" frame cut, front tow hooks, 12K & 26K axles, ABS brakes, 816 sq. in. radiator, 50 gal. right hand fuel tank, EVS3000 transmission, (3) 1950CCA batteries, 320 alternator, ember separator and AC.	INT	72,136.00
1005-0144	International 4400 (2) door, 219" WB & 41" frame cut, front tow hooks, 12K & 26K axles, ABS brakes, 816 sq. in. radiator, 50 gal. right hand fuel tank, EVS3000 transmission, (3) 1950CCA batteries, 320 alternator, ember separator and AC.	INT	72,136.00
1005-0145	International 4400 (4) door, 230" WB & 41" frame cut, front tow hooks, 12K& 26K axles, ABS brakes, 816 sq. in. radiator, 50 gal. RH fuel tank, EVS3000 trans., (3) 1950 CCA batteries, 320 alternator, ember separator and AC.	INT	78,510.00
1005-0146	International 4400 (2) door, 191" WB & 47" frame cut, front tow hooks, 12K & 26K axles, ABS brakes, 816 sq. in. radiator, 50 gal. right hand fuel tank, EVS3000 transmission, (3) 1950CCA batteries, 320 alternator, ember separator and AC.	INT	72,136.00
1005-0147	International 4400 (2) door, 211" WB & 47" frame cut, front tow hooks, 12K & 26K axles, ABS brakes, 816 sq. in. radiator, 50 gal. right hand fuel tank, EVS3000 transmission, (3) 1950CCA batteries, 320 alternator, ember separator and AC.	INT	72,136.00
1005-0148	International 4400 (2) door, 226" WB & 47" frame cut, front tow hooks, 12K & 26K axles, ABS brakes, 816 sq. in. radiator, 50 gal. right hand fuel tank, EVS3000 transmission, (3) 1950CCA batteries, 320 alternator, ember separator and AC.	INT	72,136.00
1005-0149	International 4400 4 door, 236" WB & 47" frame cut, front tow hooks, 12K& 26K axles, ABS brakes, 816 sq. in. radiator, 50 gal. RH fuel tank, EVS3000 trans., (3) 1950 CCA batteries, 320 alternator, ember separator and AC.	INT	78,510.00
1005-0150	International 7400 4 door, 264" WB & 47" frame cut, front tow hooks, 14K & 26K axles, ABS brakes, 1228 sq. in. radiator, 50 gal RH fuel tank, EVS3000 trans., (3) 1950 CCA batteries, 320 alternator, ember separator, AC and seating indicator pre-wiring..	INT	84,533.00
1005-0151	International 7400 4 door, 256" WB & 47" frame cut, front tow hooks, 14K & 26K axles, ABS brakes, 1228 sq. in. radiator, 50 gal RH fuel tank, EVS3000 trans., (3) 1950 CCA batteries, 320 alternator, ember separator, AC and seating indicator pre-wiring..	INT	83,787.00
1005-0152	International 7400 4 door, 270" WB & 47" frame cut, front tow hooks, 14K & 26K axles, ABS brakes, 1228 sq. in. radiator, 50 gal RH fuel tank, EVS3000 trans., (3) 1950 CCA batteries, 320 alternator, ember separator, AC and seating indicator pre-wiring..	INT	84,533.00
1005-0154	Outer frameliner for International 4400 chassis.	INT	2,455.00
1005-0155	International 4400 4 door, 236" WB & 47" frame cut, front tow hooks, 14K& 26K axles, ABS brakes, 816 sq. in. radiator, 50 gal. RH fuel tank, EVS3000 trans., (3) 1950 CCA batteries, 270 alternator, ember separator and AC.	INT	81,947.00
1005-0169	M2 (4) door, 237" WB & 47" frame cut, front tow hooks, 14K & 26K axles, ABS brakes, 1100 sq.in. radiator, 50 gal. left hand fuel tank, EVS3000 transmission, (2) 1850CCA batteries, 270 alternator, ember separator and AC. 294-046 Separate taillight programming.	FL	82,616.00
1005-0170	M2 (4) door, 272" WB & 47" frame cut, front tow hooks, 14,700K & 26K axles, ABS brakes, 1100 sq.in. radiator, 50 gal. left hand fuel tank, EVS3000 transmission, (2) 1850CCA batteries, 270 alternator, ember separator, AC. 294-090 Combo taillight programming.	FL	81,430.00
1005-0171	M2 (4) door, 257" WB & 47" frame cut, front tow hooks, 12K & 26K axles, ABS brakes, 1100 sq.in. radiator, 50 gal. left hand fuel tank, EVS3000 transmission, (3) 2280 CCA batteries, 270 alternator, ember separator and AC. 294-046 Separate taillight programming.	FL	78,986.00

1005-0172	M2 (4) door, 257" WB & 47" frame cut, front tow hooks, 14,700K & 26K axles, ABS brakes, 1100 sq.in. radiator, 50 gal. left hand fuel tank, EVS3000 transmission, (2) 1850 CCA batteries, 270 alternator, ember separator and AC. 294-046 Separate taillight programming.	FL	82,554.00
1020-0010	Comm Chas Prep E-1 Supp-FL	FL	3,311.00
1020-0011	Comm Chas Prep E-1 Supp-Non FL	INT	5,159.00
1020-0020	Chassis Prep M2 Cummins engine. Includes exhaust extension, rear tow eyes, high idle, master light switch, master battery switch, air inlet and battery charger receptacle.	FL	4,334.00
1020-0021	Chassis Prep Tradition. for an International Maxx Force Engine. Tradition.	INT	4,252.00
1025-0068	Driver Controlled Dif Lock. on chassis with 23,000 rear axle.	COMM	608.00
1025-0069	Driver Controlled Dif Lock. on chassis with 26,000 rear axle.	COMM	664.00
1050-0029	Front & Rear axle wheel simulator kit. Includes stainless steel wheel simulator and center cap with E-ONE logo.	COMM	1,821.00
1050-0035	Freightliner provided polished aluminum wheels.	FL	1,254.00
1050-0037	International chassis Rims Aluminum. Tradition.	INT	1,265.00
1110-0010	Air inlet. To charge brake system. Commercial chassis only. Location: [#LOC]	COMM	384.00
1110-0060	Dual Grover Hood Mounted Air Horns with Driver and Officer Foot Switches to be Supplied and Installed by Freightliner. Tradition	FL	765.00
1110-0062	Dual Hadley Hood Mounted Air Horns with Driver and Officer Foot Switches to be Supplied and Installed by International. Tradition	INT	671.00
1110-0063	Dual Grover Hood Mounted Air Horns with Driver and Officer Foot Switches to be Supplied and Installed by International. Tradition	INT	765.00
1150-0055	Hinged diamond plate lid for center bumper tray. Includes 1/4 turn latch and gas shock hold open.	COMM	307.00
1150-0061	Red vinyl lid with velcro fasteners for bumper tray center.	COMM	182.00
1150-0064	Black vinyl lid with velcro fasteners for bumper tray center.	COMM	182.00
1150-0121	Bumper tray center of bumper with slats 14 inches deep (approx 13 inches to slats).	COMM	462.00
1160-0004	Stainless Steel 10" high front bumper. Requires extended front bumper.	COMM	1,299.00
1160-0014	20" Front Bumper Gravel Shield Extension.	COMM	496.00
1200-0085	International Maxx Force 310 HP engine.	INT	7,150.00
1200-0086	International Maxx Force DT570 330 HP engine.	INT	8,465.00
1200-0089	Cummins ISC 300 HP engine.	FL	8,220.00
1200-0090	Engine brake. Provided by the chassis OEM.	FL	2,016.00
1200-0091	Exhaust brake. Provided by the chassis OEM.	INT	561.00
1200-0092	Freightliner Cummins ISC 330 HP engine.	FL	9,424.00
1200-0109	Cummins ISC 300 HP engine.	FL	6,600.00
1200-0110	Freightliner Cummins ISC 330 HP engine.	FL	8,325.00
1200-0112	International Maxx Force 310 HP engine.	INT	7,150.00
1200-0113	International Maxx Force DT570 330 HP engine.	INT	8,465.00
1200-0127	Cummmins Turbo Exhaust Brake. Provided by chassis OEM		157.00
1200-0130	Turbo exhaust brake. Provided by the chassis OEM.		161.00
1250-0011	Rear underbody support frame.		591.00
1250-0028	Rear heavy duty underbody support frame.		1,582.00
1510-0108	Universal 911 Seating Package. Includes one (1) hi-back air ride suspension driver seat, one (1) hi-back fixed SCBA officer seat, and three (3) fixed SCBA rear seats. Tradition.		2,195.00
1510-0110	Bostrom Seating Package. Includes one (1) air ride driver seat, one (1) fixed SCBA officer seat and (3) fixed SCBA rear seats. Tradition.		2,143.00
1510-0111	Seating Package Two (2) Door Freightliner. Includes One (1) Talladega 910 Hi-Back Air Ride Driver and One (1) 911 Fixed Officer (Non-SCBA).		153.00
1510-0114	Seating Package Two (2) Door International. Includes One (1) Nat'l Brand Air Ride Driver and One (1) Nat'l Brand Air Ride Officer (Non-SCBA).		125.00
1510-0125	Seating Package Two (2) Door International. Includes One (1) Bostrom Sierra 140 high back air suspended Driver seat and (1) Bostrom Tanker 400 ct non suspended SCBA Officer seat.		600.00
1540-0059	Map box in cab between forward seats. Includes mounting area for traffic advisor and siren control head (other electrical items and switches will be located in standard locations), sanded finish with black top surface material and hinged area at rear with two storage slots. Reference design drawing on file tab.		2,076.00
1670-0025	Freightliner West Coast heated cab mirrors with remote control. Tradition.		255.00
1670-0027	International West Coast Mirrors Heated with clearance lghts.		61.00
1670-0029	International West Coast heated mirrors with clearance lights and remote control.		165.00
1680-0011	Tow eyes rear below body painted		620.00
1680-0042	Tow hooks front painted in the down position.		278.00
1680-0102	Two (2) hood-mounted air horns with driver and officer mounted foot switches. International. Tradition.		666.00
1680-0103	One (1) air horn mounted on the driver side hood with driver and officer mounted foot switches. International.		556.00
1680-0104	Standard chassis trim package Freightliner M2. Includes mounting plate for the battery charger receptacle and air inlet.		147.00
1680-0105	AM/FM radio with weather band and CD player. Freightliner. Tradition.		430.00
1680-0106	Standard Chassis Trim Package 4400. Includes mounting plate for the battery charger receptacle and air inlet.		156.00
1680-0107	Diamond plate trim package for a (2) door International. Includes a full length driver side and an officer side trim that will utilze pieces already supplied by the OEM.		1,339.00
1680-0109	AM/FM Radio with Weather band and CD Player. International. Tradition.		462.00
1680-0110	Chassis Trim Package for a (2) door Freightliner.		1,339.00
1680-0111	Diamond plate trim package for a (4) door Freightliner.		2,676.00
1680-0112	Freightliner commodity surcharge		1,038.00

1680-0113	International commodity surcharge	855.00
1680-0114	Diamond plate trim package for a (4) door International. Includes a full length driver side and a (2) piece officer side trim that will utilze pieces already supplied by the OEM.	2,676.00
1680-0128	The commercial chassis to have seat belt and chassis pre-wiring for NFPA seating indicator and vehicle data recorder.	267.00
1680-0129	The commercial chassis to have seat belt and chassis pre-wiring for NFPA seating indicator and vehicle data recorder.	547.00
1680-0149	International 4400 Model Year and 2010 EPA Engine Surcharge.	7,590.00
1680-0150	International 7400 Model Year and 2010 EPA Engine Surcharge.	7,838.00
1680-0151	International 7600 Model Year and 2010 EPA Engine Surcharge.	10,038.00
1680-0152	Freightliner Model Year and 2010 EPA Engine Surcharge.	8,580.00
1680-0155	International 7400 Model Year Surcharge only	1,238.00
1750-0018	Battery charger Super Smart 20 AMP with 120V Kussmaul air compressor.	1,619.00
1750-0019	Battery charger Super Smart 110 volt, 20 amp.	419.00
1750-0024	Auto eject receptacle inlet 20amp located [#LOC] with a [#COL] cover.	573.00
1750-0029	Switch horn button two position DOT/air horn	98.00
1750-0030	Switch horn button two position DOT/electronic siren	98.00
1750-0031	Switch horn button two position DOT/Q2B	98.00
1750-0034	Switch additional 12 volt/15amp. Location and function: [#LOC].	201.00
1750-0059	Receptacle inlet 20amp with a [#COL] cover. Location: [#LOC]	288.00
1750-0082	12V power distribution module. Includes (6) battery hot and (6) switched hot circuits. 100 amps max (IATS). Location: [#LOC]	310.00
1750-0211	OEM Supplied Wig-Wag Headlights. IH OEM Code 60AKK	262.00

TYPHOON CUSTOM CHASSIS - TRADITION PUMPER

1025-0003	Meritor FL941 front axle 16,000lb	Typhoon	9,847.00
1025-0004	Meritor FL941 front axle 18,000lb	Typhoon	11,344.00
1025-0016	Meritor RS-24-160 single rear axle 24,000lb capacity	Typhoon	9,847.00
1025-0017	Meritor RS-25-160 single rear axle 27,000lb capacity	Typhoon	11,024.00
1025-0027	Driver controlled rear differential	Typhoon	701.00
1025-0029	Front Shock absorbers	Typhoon	163.00
1025-0089	Meritor RS-26-185 single rear axle 27,000lb capacity	Typhoon	12,309.00
1050-0000	Steel wheels for front axle (2).	Typhoon	287.00
1050-0001	Aluminum wheels for front axle (2).	Typhoon	1,555.00
1050-0002	Steel wheels for rear axle (4).	Typhoon	571.00
1050-0003	Aluminum wheels for rear axle (4).	Typhoon	3,107.00
1050-0007	Front axle wheel trim kit. Includes stainless steel lug nut covers and center cap with E-ONE logo. Note: Center cap will have an inspection port IPO a logo if equipped with Stemco oil seals.	Typhoon	207.00
1050-0008	Rear axle (single) Wheel Trim kit. Includes stainless steel lug nut covers (chrome plated plastic if applicable) and center cap with E-ONE logo. E-ONE custom chassis w/ steel wheels will have chrome plated plastic lug covers.	Typhoon	255.00
1050-0031	Front axle wheel simulator kit. Includes stainless steel wheel simulator and center cap with E-ONE logo. Note: Center cap will have an inspection port IPO a logo if equipped with Stemco oil seals.	Typhoon	500.00
1050-0032	Rear axle (single) wheel simulator kit. Includes full stainless steel wheel simulators with integrated lug nut covers and E-ONE logo.	Typhoon	729.00
1050-0042	Two heavy duty steel wheels for front axle. For use with 21.5K and greater ratings only.	Typhoon	1,468.00
1050-0043	Rear axle (tandem) wheel simulator kit. Includes full stainless steel wheel simulators with integrated lug nut covers and E-ONE logo.	Typhoon	1,458.00
1050-0044	Accuride aluminum wheels for front axle (2).	Typhoon	1,510.00
1050-0045	Accuride aluminum wheels for rear axle (4).	Typhoon	3,016.00
1050-0047	Front axle wheel trim kit. Includes stainless steel "Cover-Up" covers with E-ONE logo. Not available with Stemco oil seals.	Typhoon	268.00
1050-0048	Rear axle (single) Wheel Trim kit. Includes stainless steel "Cover-Up" covers with E-ONE logo. Not available with Stemco oil seals.	Typhoon	342.00
1060-0001	Two Michelin 315 tires model XZA-1 for front axle	Typhoon	1,256.00
1060-0004	Four Michelin 11R tires model XZE2 for rear axle	Typhoon	2,035.00
1060-0005	Four Michelin 12R tires model XZE for rear axle	Typhoon	2,356.00
1060-0015	Four Michelin 11R rear tires with Mud and Snow tread	Typhoon	2,464.00
1060-0016	Four Michelin 12R rear tires with Mud and Snow tread	Typhoon	2,784.00
1060-0060	Two Michelin 315 tires model XZY3 for front axle.	Typhoon	998.00
1070-0001	Rear suspension springs rated equal to the capacity of the axle	Typhoon	1,179.00
1100-0000	16-1/2" x 6" S-cam brakes with ArvinMeritor automatic slack adjusters for front axle	Typhoon	269.00
1100-0001	Meritor EX225H 17" disc brakes for front axle.	Typhoon	1,051.00
1100-0002	ArvinMeritor 16-1/2" x 7" S-cam brakes with cast brake drums for a single rear axle	Typhoon	269.00
1100-0003	Meritor EX225H 17" disc brakes for rear axle, maximum capacity 27,000lb.	Typhoon	1,051.00
1100-0005	Brake system air 4X2/4X4	Typhoon	7,120.00
1100-0011	Roll Stability Control, Includes ATC. Not available on commercial chassis, tiller or tandem axle custom chassis	Typhoon	1,703.00
1100-0024	G4 Electronic Stability Control (4x2), Includes RSC and ATC. Not available on 4x4, commercial chassis or tiller.	Typhoon	2,996.00
1110-0000	Inlet for air system. Location: [#LOC]	Typhoon	318.00
1110-0002	Air dryer Bendix AD-9	Typhoon	414.00
1110-0005	Auto moisture ejectors heated	Typhoon	360.00
1110-0011	Gauge air intake restriction	Typhoon	221.00

1110-0026	Air horns recessed in bumper (PR)	Typhoon	707.00
1110-0027	Isolated air tank. Includes pressure protection valve.	Typhoon	480.00
1110-0046	Kussmaul 12V Auto Drain. For use with Kussmaul air compressor.	Typhoon	399.00
1110-0058	Air horns recessed in bumper (PR) with bells behind bumper.	Typhoon	758.00
1125-0002	Brake Jacob's engine compression	Typhoon	1,500.00
1150-0055	Hinged diamond plate lid for center bumper tray. Includes 1/4 turn latch and gas shock hold open.	Typhoon	254.00
1150-0061	Red vinyl lid with velcro fasteners for bumper tray center.	Typhoon	150.00
1150-0064	Black vinyl lid with velcro fasteners for bumper tray center.	Typhoon	150.00
1150-0120	Bumper tray center of bumper with slats 12 inches deep (approx 11 inches to slats).	Typhoon	382.00
1150-0126	Divider center bumper hose tray running side to side with adjustable track (Provides two storage areas, one ahead and one behind divider).	Typhoon	200.00
1150-0139	Nylon black strap with aluminium quick release buckle for front bumper hose tray. Strap to attach to front and rear walls of tray down low as applicable. Location: [#LOC].	Typhoon	95.00
1150-0158	Bumper tray center of bumper without slats 12 inches deep.	Typhoon	260.00
1160-0000	Bumper 10" stainless steel	Typhoon	1,076.00
1160-0014	20" Front Bumper Gravel Shield Extension.	Typhoon	410.00
1200-0020	Trans Synd synthetic transmission fluid for EVS 3000.	Typhoon	503.00
1200-0055	Eng/Trans Cummins ISC 330HP/EVS3000 2007 EPA Compliant Engine	Typhoon	52,736.00
1200-0056	Eng/Trans Cummins ISC 360HP/EVS3000 2007 EPA Compliant Engine	Typhoon	54,086.00
1200-0057	Eng/Trans Cummins ISL 370HP/EVS3000 2007 EPA Compliant Engine	Typhoon	66,273.00
1200-0058	Eng/Trans Cummins ISL 425HP/EVS3000 2007 EPA Compliant Engine	Typhoon	67,931.00
1200-0099	Eng/Trans Cummins ISC 330HP/EVS3000 Non-EGR for export use only.	Typhoon	44,943.00
1200-0116	Eng/Trans Cummins ISL 450HP/EVS3000 2010 EPA compliant engine.	Typhoon	79,280.00
1200-0124	Eng/Trans Cummins ISC 330HP/EVS3000 2010 EPA compliant engine.	Typhoon	64,086.00
1200-0125	Eng/Trans Cummins ISL 380HP/EVS3000 2010 EPA compliant engine.	Typhoon	77,622.00
1200-0129	Eng/Trans Cummins ISC 380HP/EVS3000 2010 EPA compliant engine.	Typhoon	65,435.00
1250-0006	Frame liner 9.375 X 3.125 X .375.	Typhoon	2,574.00
1250-0011	Rear underbody support frame.	Typhoon	489.00
1250-0015	Frame assembly to include 176" wheelbase and 41" framecut.	Typhoon	15,218.00
1250-0016	Frame assembly to include 196" wheelbase and 41" framecut.	Typhoon	15,218.00
1250-0017	Frame assembly to include 210" wheelbase and 41" framecut.	Typhoon	15,218.00
1250-0018	Frame assembly to include 182" wheelbase and 47" framecut.	Typhoon	15,218.00
1250-0019	Frame assembly to include 202" wheelbase and 47" framecut.	Typhoon	15,218.00
1250-0020	Frame assembly to include 216" wheelbase and 47" framecut.	Typhoon	15,218.00
1250-0028	Rear heavy duty underbody support frame.	Typhoon	1,309.00
1250-0030	Frame assembly to include 220" wheelbase and 41" framecut.	Typhoon	15,218.00
1350-0005	Fuel system 65 gallons	Typhoon	1,350.00
1350-0011	Fuel pump electric w/reprime	Typhoon	353.00
1350-0012	Fuel shutoff valve. Location: [#LOC]	Typhoon	89.00
1350-0013	Fuel water Racor separator to be a bottom drop out style. Shall include indicator light and audible alarm.	Typhoon	616.00
1350-0037	Fuel system w/65 gallon stainless steel tank.	Typhoon	2,372.00
1400-0002	Battery four group 31 1000CCA	Typhoon	846.00
1400-0011	Battery Splash Cover for ULC compliance	Typhoon	254.00
1400-0024	Jumper studs to be located below driver's side front corner of body (or pump module if equipped). Studs to face down with positive stud outboard.	Typhoon	179.00
1510-0000	Seat cavity cover	Typhoon	146.00
1510-0035	Universal air pack bottle bracket (EA). Location: [#LOC]	Typhoon	127.00
1510-0038	Driver seat 911 air ride.	Typhoon	789.00
1510-0040	Officer seat to be 911 air ride	Typhoon	789.00
1510-0041	Officer seat 911 air ride SCBA.	Typhoon	939.00
1510-0042	Officer seat to be 911 fixed SCBA	Typhoon	766.00
1510-0048	Driver seat to be 911 electric	Typhoon	1,179.00
1510-0050	Rear facing 911 seat with SCBA driver's side	Typhoon	659.00
1510-0053	Rear facing 911 seat with SCBA officer's side	Typhoon	659.00
1510-0058	Fold down 911 seat located [#LOC]	Typhoon	353.00
1510-0062	Two man bench centered on rear wall with 911 SCBA backs.	Typhoon	1,124.00
1510-0082	Zico Quic-Hold mechanical air pack bottle bracket for 5" bottle(ea). Model MWAB with adjustable footplate and pull release strap. Location: [#LOC]	Typhoon	464.00
1510-0091	Zico Quic-Hold mechanical air pack bottle bracket (EA). Model QLM-U-OPR with adjustable footplate and pull release. Location:[#LOC]	Typhoon	561.00
1510-0100	Padded headrest for fold down jump seat (EA). Not available with rear wall windows.	Typhoon	102.00
1510-0126	CrewGuard occupant seating detection system. Display location: [#LOC].	Typhoon	2,906.00
1510-0127	Additional CrewGuard display. Location: [#LOC].	Typhoon	230.00
1510-0138	Two man bench centered on rear wall with (1) 911 SCBA back driver and (1) bench back cushion officer.	Typhoon	987.00
1510-0144	FlameFighter model 14000 air pack bottle bracket with model 39015 safety strap (EA). Location: [#LOC]	Typhoon	191.00
1510-0148	Rear facing 911 attendant seat driver's side.	Typhoon	554.00
1510-0149	Rear facing 911 attendant seat officer's side.	Typhoon	554.00
1510-0150	Two man bench centered on rear wall with (1) Bostrom SCBA back driver and (1) bench back cushion officer.	Typhoon	1,250.00
1515-0017	Air conditioning for the Typhoon X, CII X and Quest with Cummins ISC/ISL engine, radiator mounted condensor.	Typhoon	5,588.00

1515-0029	Air conditioning for the TyphoonX, CII X and Quest with Cummins ISC or ISL, roof top mounted condensor.	Typhoon	6,527.00
1520-0013	Typhoon X medium cab with 58" CA	Typhoon	27,745.00
1535-0002	Driver side cab wheel well medical cabinet approximately 42x22(25 Quest)x28. Includes external locking roll-up door and interior hinged door with locking push-button latch. Cabinet includes (2) adjustable shelves.	Typhoon	1,724.00
1535-0003	Officer side cab wheel well medical cabinet approximately 42x22(25 Quest)x28. Includes external locking roll-up door and interior hinged door with locking push-button latch. Cabinet includes (2) adjustable shelves.	Typhoon	1,724.00
1535-0005	Medical cabinet mounted on rear wall of cab 48X40X20 with locking roll up door. Lower door opening raised to provide hand clearance.	Typhoon	3,360.00
1535-0007	Medical cabinet mounted on rear wall of cab 55X40X20 with a locking roll up door. Lower door opening raised to provide hand clearance.	Typhoon	2,856.00
1535-0032	All medical cabinet RUD in the cab to be locking with 1250 key	Typhoon	115.00
1535-0034	All exterior access RUD for medical cabinets to be painted job color. Not available on two tone cabs.	Typhoon	212.00
1535-0075	Driver side cab wheel well medical cabinet approximately 42x22(25 Quest)x28. Includes external locking roll-up door and interior hinged door with locking push-button latch. Cabinet includes (1) adjustable partition installed and (2) adjustable shelves shipped loose in the cabinet.	Typhoon	1,820.00
1535-0080	Officer side cab wheel well medical cabinet approximately 42x22(25 Quest)x28. Includes external locking roll-up door. Cabinet includes (2) adjustable shelves.	Typhoon	1,542.00
1535-0081	Driver side cab wheel well medical cabinet approximately 42x22(25 Quest)x28. Includes external locking roll-up door. Cabinet includes (2) adjustable shelves.	Typhoon	1,542.00
1535-0088	Riser for medical cabinet. Approx 40"W x 20"D x 17"H. Front of riser to have a drop down door with two locking latches. Finish to match medical cabinet.	Typhoon	777.00
1535-0091	Officer side cab wheel well medical/communication cabinet approximately 42x22(25 Quest)x28. Includes external half height locking pan door with Tri-Mark latch painted job color and interior full height opening with cargo netting. Cabinet includes (3) adjustable interior pull-out shelves.	Typhoon	2,719.00
1535-0092	Driver side cab wheel well medical/communication cabinet approximately 42x22(25 Quest)x28. Includes external half height locking pan door with Tri-Mark latch painted job color and interior full height opening with cargo netting. Cabinet includes (3) adjustable interior (4) sided trays with 1" lips.	Typhoon	2,719.00
1540-0006	Map box suspended with drop down doors.	Typhoon	483.00
1540-0026	Locking map box door. Map box door to include a locking push-button latch. Key type to be CH751.	Typhoon	66.00
1540-0040	Map box suspended with drop down doors. 34"W x 10"H x 12"D	Typhoon	483.00
1540-0049	Map box suspended with drop down doors. Driver door approx. 15.5"W, officer door approx. 19.5"W. 35"W x 11"H x 13.5"D. (1) vertical partition 4" off officer side, (1) shelf offset to driver side of partition.	Typhoon	483.00
1550-0009	Fixed rear cab wall narrow windows (pr).	Typhoon	98.00
1550-0011	Rear crew cab door windows. Includes manual roll-down actuation. Not available with paddle style door latching.	Typhoon	928.00
1550-0018	Scuff plates stainless steel (Set). Not available with paddle latches.	Typhoon	90.00
1550-0019	Windows cab side sliding driver side	Typhoon	230.00
1550-0024	All cab doors shall have paddle latches. Not available on rear doors with roll down windows.	Typhoon	535.00
1550-0032	Windows cab side sliding officer side	Typhoon	230.00
1550-0037	(4) Incandescent cab step area lighting. Locate each light in [#LOC]. Lights to be switched with door ajar.	Typhoon	135.00
1550-0054	All cab exterior access doors to have 1250 keyed locks.	Typhoon	496.00
1615-0001	Vista full height rear doors 12"	Typhoon	3,065.00
1620-0002	Stainless steel grille for Typhoon X	Typhoon	760.00
1670-0001	Ramco 6001FFR mirrors. Remote controlled with top CAS750 convex. Location:[#LOC]	Typhoon	1,304.00
1670-0002	Ramco 6001MCR mirrors. Remote controlled with bottom convex. Location: [#LOC]	Typhoon	1,036.00
1670-0010	Pair of Retrac West Coast mirrors mounted on cab doors.	Typhoon	254.00
1670-0013	Both cab mirrors to be heated.	Typhoon	252.00
1670-0035	Ramco 6001FFR mirrors with INVUE camera. Remote controlled with top CAS750 convex. Location: [#LOC].	Typhoon	2,301.00
1670-0036	Ramco 6001MCR mirrors with INVUE camera. Remote controlled with bottom convex. Location: [#LOC]	Typhoon	2,301.00
1670-0038	Lang Mekra mirrors w/LED marker lights and turn signals, remote, heated and convex pair.	Typhoon	1,126.00
1675-0022	Pair of 18" handrails located just behind driver and officer front door one each side	Typhoon	311.00
1675-0023	Pair of 18" handrails located just behind driver and officer rear door (ALS doors if equipped) one each side.	Typhoon	311.00
1675-0024	Pair of 36" handrails located just behind driver and officer rear door (ALS doors if equipped) one each side.	Typhoon	339.00
1675-0030	Mud flaps, front, black with E-ONE logo.	Typhoon	130.00
1680-0000	Air intake emergency shutdown. Dash mounted guarded switch	Typhoon	1,360.00
1680-0001	Block heater 1000 watt	Typhoon	428.00
1680-0005	Thermatic Fan Clutch	Typhoon	1,528.00
1680-0006	Drivelines 1710	Typhoon	885.00
1680-0011	Tow eyes rear below body painted	Typhoon	513.00
1680-0021	Exhaust end for Plymovent. For exhaust extraction system.	Typhoon	227.00
1680-0042	Tow hooks front painted in the down position.	Typhoon	230.00
1680-0056	Cold Weather Pkg for Cab. Includes (2) 8" fans, fan clutch and additional insulation on the front wall.	Typhoon	2,826.00
1685-0057	Heater Rear with Cover (PR) and front heater with heat to the feet for the driver and officer	Typhoon	1,368.00

1685-0116	Interior grab handle rubber covered (2). Locate one each side at interior of front cab door opening (at rear of opening).	Typhoon	177.00
1700-0003	Alternator Leece Neville. (270 amp SAE/240 NFPA rating).	Typhoon	1,753.00
1700-0005	Alternator Leece Neville 320amp. 320 Amp SAE/275 NFPA Neville	Typhoon	2,726.00
1750-0009	Radio AM/FM CD with weather band located [#LOC]	Typhoon	671.00
1750-0010	Radio speakers additional pair. Locate each side rear cab ceiling.	Typhoon	226.00
1750-0011	Speedometer officer's side overhead.	Typhoon	257.00
1750-0015	Windshield fans 8" pair. Location:[#LOC]	Typhoon	310.00
1750-0018	Battery charger Super Smart 20 AMP with 120V Kussmaul air compressor.	Typhoon	1,340.00
1750-0019	Battery charger Super Smart 110 volt, 20 amp.	Typhoon	347.00
1750-0022	Battery charger Kussmaul 40 amp model 1200 with air compressor.	Typhoon	1,970.00
1750-0024	Auto eject receptacle inlet 20amp located [#LOC] with a [#COL] cover.	Typhoon	474.00
1750-0029	Switch horn button two position DOT/air horn	Typhoon	81.00
1750-0030	Switch horn button two position DOT/electronic siren	Typhoon	81.00
1750-0031	Switch horn button two position DOT/Q2B	Typhoon	81.00
1750-0034	Switch additional 12 volt/15amp. Location and function: [#LOC].	Typhoon	167.00
1750-0047	The chassis shall be pre wired for dealer installation of On-Spot tire chains.	Typhoon	351.00
1750-0059	Receptacle inlet 20amp with a [#COL] cover. Location: [#LOC]	Typhoon	238.00
1750-0066	Halogen front turn signal amber (PR). Locate: [#LOC]	Typhoon	227.00
1750-0072	12 volt electrical outlet in the cab wired battery hot. Location: [#LOC].	Typhoon	48.00
1750-0075	English dominant main cab gauge cluster.	Typhoon	1,686.00
1750-0076	Metric dominant main cab gauge cluster.	Typhoon	1,785.00
1750-0082	12V power distribution module. Includes (6) battery hot and (6) switched hot circuits. 100 amps max (IATS). Location: [#LOC]	Typhoon	257.00
1750-0083	Turn signal Federal Signal QuadraFlare QL64Z-ARROW LED amber pair located [#LOC]	Typhoon	227.00
1750-0125	Block heater receptacle 15amp with a [#COL] cover. Location [#LOC].	Typhoon	238.00
1750-0131	Pyrometer gauge in cab.	Typhoon	473.00
1750-0150	Block heater receptacle 20amp auto eject with a [#COL] cover. Location [#LOC].	Typhoon	474.00
1750-0178	Windshield fan 8". Location: rear facing mounted on driver side 3x3 post.	Typhoon	156.00
1750-0187	Auto drain, Kussmaul model 091-9-089 120V. For use with air compressor 091-9B-1 only.	Typhoon	170.00
1750-0195	Cab dome lts red/white (2 red/white, 2 white) 4" incandescent. White light wired thru door and light assembly mounted rocker switch. Red light thru light assembly mounted rocker switch. Red/white located in front of cab, white located at rear cab doors.	Typhoon	483.00
1800-0013	Cooling system for use with Cyclone II X, Typhoon X, and Quest chassis. For use with 2010 EPA engines. Includes coolant recovery system.	Typhoon	5,961.00
3000	**BODY**		
3100-0095	Driver side body with full height 36" wide forward and 36" wide rearward compartmentation. Includes (1) 56" wide compartment over the wheel well.		8,150.00
3100-0096	Driver side body with full height 42" wide forward and 42" wide rearward compartmentation. Includes (1) 56" wide compartment over the wheel well.		8,711.00
3100-0112	Driver side body with full height 36" wide forward and 50" wide rearward enhanced extended compartmentation. Includes (1) 56" wide compartment over the wheel well.		8,865.00
3100-0113	Driver side body with full height 42" wide forward and 56" wide rearward enhanced extended compartmentation. Includes (1) 56" wide compartment over the wheel well.		9,436.00
3100-0153	Driver side body with full height 42" wide forward and 56" wide rearward enhanced extended compartmentation. Includes (1) 56" wide compartment over the wheel well.		10,035.00
3100-0157	Driver side body with upper and lower compartmentation. Includes 42" wide forward and 42" wide rearward lower compartments and (3) opening upper compartments.		8,711.00
3100-0158	Portable water tank storage with access door at rear. Includes composite material overlay and door ajar switch.		626.00
3100-0159	Driver side body with full height 42" wide forward and 56" wide rearward enhanced extended compartmentation. Includes (1) 56" wide compartment over the wheel well and one (1) storage tunnel and access door at rear.		12,346.00
3100-0166	Driver side tunnel to hold: [#LOC].		505.00
3100-0178	Driver side body with full height 42" wide forward and 56" wide rearward enhanced extended compartmentation. Includes (1) 56" wide compartment over the wheel well and one (1) storage tunnel.		12,346.00
3110-0000	Center Slam Strip Rear End with (3) compartments- (2) lower and (1) upper and a diamond plate center strip for a Jet or Newton Dump application. Includes diamond plate panels.		1,891.00
3110-0004	Full Height Rear Compartment. Includes diamond plate panels.		1,023.00
3110-0015	Full Height Rear Compartment with Officer Side Ladder Tunnel. Includes diamond plate panels and storage access door with push button latch.		922.00
3110-0017	Full Height Rear Compartment with diamond plate panels.		853.00
3110-0035	Upper rear compartment depth to be approximately 25" deep.		228.00
3110-0052	Bolt-on diamond plate tailboard (full width of rear compartment). Includes the enhanced extended side compartment frame work and handrails- (2) vertically on trailing edge of body and horizontally mounted handrail(s) below hosebed.		915.00
3110-0053	Bolt-on diamond plate tailboard (full width of rear compartment). Additional 10" of tailboard to run full width of body ("T" shaped tailboard). Includes the enhanced extended side compartment frame work and (3) handrails- (2) vertically on trailing edge of body and (1) horizontally below hosebed.		1,924.00
3110-0061	Bolt-on diamond plate tailboard (full width of rear compartment). Includes the enhanced extended side compartment frame work with diamond plate compartment tops, (1) officer side lower area folding step with integral lights. Driver side includes (1) upper hosebed mounted handrail (as applicable) and (3) handrails- (2) vertically on trailing edge of body and (1) horizontally below hosebed.		713.00

3120-0004	Officer half side body with 36" wide forward and 36" wide rearward compartmentation. Includes adjustable ladder tracks.	4,072.00
3120-0005	Officer half side body with 42" wide forward and 42" wide rearward compartmentation. Includes adjustable ladder tracks.	4,355.00
3120-0013	Officer half side body with 36" wide forward and 50" wide rearward enhanced extended compartmentation. Includes adjustable ladder tracks.	4,796.00
3120-0014	Officer half side body with 42" wide forward and 56" wide rearward enhanced extended compartmentation. Includes adjustable ladder tracks.	5,081.00
3120-0145	Officer 3/4 side body with full height 36" wide forward and 36" wide rearward compartmentation. Includes (1) 56" wide compartment over the wheel well.	5,088.00
3120-0146	Officer 3/4 side body with full height 42" wide forward and 42" wide rearward compartmentation. Includes (1) 56" wide compartment over the wheel well.	5,445.00
3120-0155	Officer 3/4 side body with 36" wide forward and 50" wide rearward enhanced extended compartmentation. Includes (1) 56" wide compartment over the wheel well.	5,812.00
3120-0156	Officer 3/4 side body with 42" wide forward and 56" wide rearward enhanced extended compartmentation. Includes (1) 56" wide compartment over the wheel well.	6,170.00
3120-0160	Officer side body with full height 36" wide forward and 36" wide rearward compartmentation. Includes (1) 33" wide compartment over the wheel well and (1) Zico Overhead Ladder Rack.	13,330.00
3120-0161	Officer side body with full height 42" wide forward and 42" wide rearward compartmentation. Includes (1) 33" wide compartment over the wheel well and (1) Zico Overhead Ladder Rack.	13,900.00
3120-0170	Officer side body with full height 36" wide forward and 50" wide rearward enhanced extended compartmentation. Includes (1) 33" wide compartment over the wheel well and (1) Zico Overhead Ladder Rack.	14,055.00
3120-0171	Officer side body with full height 42" wide forward and 56" wide rearward enhanced extended compartmentation. Includes (1) 33" wide compartment over the wheel well and (1) Zico Overhead Ladder Rack.	14,625.00
3120-0279	Officer side body with full height 42" wide forward and 56" wide rearward enhanced extended compartmentation. Includes (1) 33" wide compartment over the wheel well and (1) Zico Overhead Ladder Rack.	15,587.00
3120-0283	Officer side body with full height 42" wide forward and 56" wide rearward enhanced extended compartmentation. Includes (1) 56" wide compartment over the wheel well and one (1) storage tunnel.	12,346.00
3120-0300	Officer side body with full height 42" wide forward and 56" wide rearward enhanced extended compartmentation. Includes (1) 56" wide compartment over the wheel well and one (1) storage tunnel and access door at rear.	12,346.00
3130-0190	Top Mount Pump Module. Includes area for single stacked double crosslay (notched divider) and TM walkway with folding steps with intergral lights and (2) vertical handrails.	1,645.00
3130-0191	Top Mount Pump Module. Includes area for single stacked triple crosslay (notched dividers) and TM walkway with folding steps with integral lights and (2) vertical handrails.	1,997.00
3130-0193	Side Mount Pump Module. Includes area for single stacked triple crosslay (notched dividers).	354.00
3130-0194	Top Mount Pump Module. Includes area for a double speedlay and TM walkway with folding steps with integral lights and (2) vertical handrails.	2,604.00
3130-0195	Top Mount Pump Module. Includes area for a double speedlay, single crosslay and TM walkway with folding steps with integral lights and (2) vertical handrails.	2,956.00
3134-0011	Officer side pump panel to be vertically hinged on forward extrusion. Panel(s) to be secured in the closed position with push button latches. Upper panel to be held open with gas shock.	416.00
3134-0013	Driver and Officer side pump panels to be vertically hinged on forward extrusion. Panels to be (2) or (3) pieces, depending on module height, and secured in the closed position with push button latches. Upper panels to be held open with gas shock.	829.00
3134-0015	Stainless steel TM control panel, driver and officer side pump panels.	806.00
3134-0026	Pump panel support angles. Locate up to (3) horizontally mounted as required on interior side of the main vertically hinged pump panel(s).	127.00
3134-0056	Driver side panel shall be attach with screw.Officer side pump panels to be vertically hinged on forward extrusion. Panels to be (2) or (3) pieces, depending on module height, and secured in the closed position with push button latches. Upper panels to be held open with gas shock.	829.00
3136-0004	The lower area of the pump compartment to have a four (4) sided heat pan with two (2) removable (side to side) bottoms. Bottoms to be secured in the closed position with mechanical fasteners.	839.00
3136-0006	Two (2) pump compartment heaters are to be mounted in the pump area. Locate as low as possible.	1,365.00
3136-0011	P-Rubber in flex joint(s) between pump module and/or body modules.	500.00
3136-0037	Top mount walkway compartments. Includes spring mounted hinged doors with push button latch. Each compartment includes (1) incandescent light and wired to door adjar indicator.	750.00
3136-0061	Heat pan removable bottoms to have screws and nuts in place of butterfly latches.	228.00
3136-0064	The lower area of the pump compartment to have a four (4) sided heat pan with two (2) removable (side to side) bottoms. Bottoms to be secured in the closed position with butterfly latches.	839.00
3300-0008	Door double vertically hinged painted. Location(s): [#LOC]	689.00
3300-0009	Door single vertically hinged diamond plate. Location(s): [#LOC]	433.00
3300-0010	Door double vertically hinged diamond plate. Location(s): [#LOC]	620.00
3300-0011	Door single horizontally hinged lift-up painted. Location(s): [#LOC]	602.00
3300-0017	Door roll up short (up to 45") with satin finish ROM. Location(s): [#LOC]	695.00
3300-0019	Door roll up tall (greater than 45") with satin finish ROM. Location(s): [#LOC]	992.00
3300-0021	Door roll up short (up to 45") with painted finish ROM. Location(s): [#LOC]	1,179.00
3300-0022	Door roll up tall (greater than 45") with painted finish ROM. Location(s): [#LOC]	1,475.00
3300-0025	Door single horizontally hinged drop down painted. Location(s): [#LOC]	497.00
3300-0030	Door double 3-point vertically hinged painted. Location(s): [#LOC]	1,376.00

3300-0062	Keyed compartment door latch with #1250 key. Location(s): [#LOC]	65.00
3300-0063	Keyed roll-up compartment door with #1250 key. Location(s): [#LOC]	115.00
3300-0076	Door double 3-point vertically hinged painted. Location(s): [#LOC]	1,002.00
3300-0130	Door single horizontally hinged drop down painted. Includes body mounted stops to support the door in the open position. Location(s): [#LOC]	497.00
3300-0133	Door single horizontally hinged drop down sanded smooth plate. Location(s): [#LOC].	394.00
3300-0135	Door double 3-point vertically hinged smooth plate sanded. Location(s): [#LOC]	1,376.00
3300-0139	Door double 3-point horizontal hinged painted. Location(s): [#LOC]. Lower door should act as an exterior writing surface, w/ adjustable angles.	1,376.00
3300-0140	Door single horizontally hinged drop down diamond plate. Location(s): [#LOC].	373.00
3305-0003	Single diamond plate cover for the crosslay area. Includes applicable grab handle(s) and (2) hold downs. Non-aerial applications to be tagged as a non-stepping surface.	495.00
3305-0007	Vinyl [#COL] hosebed cover with attached rear flap(s).	713.00
3305-0008	Vinyl [#COL] crosslay cover with attached side flaps.	249.00
3305-0015	Vinyl [#COL] speedlay front cover.	196.00
3305-0016	Vinyl [#COL] speedlay side covers.	167.00
3305-0022	Vinyl rear cover for diamond plate hosebed cover. Color: [#COL]	220.00
3305-0024	Vinyl [#COL] side covers for diamond plate crosslay cover.	156.00
3305-0056	(2) piece aluminum hosebed cover. Includes center hosebed divider with notched rear, gas shocks, positive hold opens/hold closed at rear, (2) grab handles- frt and (2) handrails -rear.	2,273.00
3305-0064	Nylon black strap with aluminium quick release buckle for hose tray. Strap to attach to side walls of tray down low as applicable. Location: [#LOC].	95.00
3305-0084	(4) piece aluminum hosebed cover. Includes center hosebed divider with notched rear, fill tower(s) access door(s), (2) gas shocks, positive hold-opens/hold-closed at center and at the rear, (6) grab handles- (4) fwd cover and (2) fwd area of rear cover with (2) handrails on rear cover. A landing platform (sized and positioned as required with overall rearend configuration) with embossed diamond plate surface will be centrally located at the upper rear of the apparatus to assit with hosebed cover operations.	3,165.00
3320-0019	SCBA Bottle Storage. (7) Fire Shopp SCBA bottle storage with hinged doors with push button latches. (4) officer side and (3) driver side in wheel well area.	1,208.00
3320-0020	SCBA Bottle Storage. (4) Fire Shopp SCBA bottle storage with hinged doors with push button latches. (2) officer side and (2) driver side in wheel well area.	1,048.00
3330		0.00
3330-0053	Folding Step. Location [#LOC]. Step include integral lights. Each location requires a minimum of (1) handrail per NFPA.	126.00
3330-0055	Steps rear. Steps include integral lights. Includes folding steps on officer side (staggered stepped as applicable with tailboard depth) for additional hosebed access and handrail mounted on officer side upper hosebed side (as applicable).	379.00
3340-0004	Hosebed above the booster tank. Includes forward hosebed and tower(s) cover plate work. Hosebed adjustable divider extrusion rearward of the furthest tower is to run full width of the hosebed.	1,389.00
3340-0015	Diamond plate single axle wheel well. Includes bolt-on composite wheel well liners and fenderettes.	956.00
3340-0035	Divider Long. To run full length of hosebed (front to rear).	420.00
3340-0049	Hosebed Storage Pan. Locate in forward area of hosebed.	633.00
3340-0062	Divider medium. To run full length of hosebed (front to rear) behind single fill tower.	378.00
3340-0063	Divider short. To run full length of hosebed (front to rear) behind dual fill towers.	317.00
3340-0074	Body mainframe and hosebed side assemblies for a 85" high body.	1,002.00
3340-0075	Body mainframe and hosebed side assemblies for a 90" high body.	2,002.00
3340-0080	Bolt-on diamond plate 18" tailboard (full width of body). Includes (2) squared off beavertails (no stanchions) with removable outer panels and (3) handrails- (2) vertically on beavertails and (1) horizontally below hosebed.	799.00
3340-0083	Bolt-on diamond plate tailboard (full width of rear compartment). Includes the enhanced extended side compartment frame work with diamond plate compartment tops, (1) officer side lower area folding step. Driver side includes (1) upper hosebed mounted handrail (as applicable) and (3) handrails- (2) vertically on trailing edge of body and (1) horizontally below hosebed.	713.00
3340-0093	Mud flaps, rear, black with E-ONE logo.	137.00
3340-0117	Bolt-on diamond plate 12" tailboard (full width of body). Includes (2) squared off beavertails (no stanchions) with removable outer panels and (3) handrails- (2) vertically on beavertails and (1) horizontally below hosebed.	643.00
3340-0121	Full length driver side tunnel. Reduces driver side upper compartment depths to 12" deep IPO 26". Tunnel includes access door at rear.	1,211.00
3340-0125	Recess mounting for directional lightbar. Located on rear area of body.	339.00
3340-0128	Bolt-in partition walls. Locate in lower rear compartment transverse area. Partitions to seperate the side rear compartments from the rear compartment.	199.00
3340-0145	Rubrail for the body and pump area module(s).	642.00
3340-0151	Dri-Dek Brand [#COL] floor matting covering all applicable body compartment floors, shelves, and rollout trays.	1,411.00
3350-0000	Hydraulic hose reel for use with Hurst brand tools. Includes 100' 1/4" hose (up to 5,000 PSI) and nylon roller unit (captive type) reel mounted. Location: [#LOC]. Hose Color [#COL].	2,078.00
3350-0009	Hydraulic hose reel for use with TNT brand tools. Includes 100' 1/4" hose (up to 10,000 PSI) and nylon roller unit (captive type) reel mounted. Location: [#LOC]. Hose Color [#COL].	4,177.00
3350-0010	Hydraulic hose reel for use with Phoenix brand tools. Includes 100' 1/4" hose (up to 5,000 PSI) and nylon roller unit (captive type) reel mounted. Location: [#LOC]. Hose Color [#COL].	2,078.00
3350-0017	30' Lead/Supply Line for high pressure hydraulic reel. To be used with 10,000 PSI hyd reels. Locate [#LOC].	1,056.00

3350-0018	12' Lead/Supply Line for low pressure hydraulic reel. To be used with 5,000 PSI hyd reels. Locate [#LOC].	569.00
3350-0019	30' Lead/Supply Line for low pressure hydraulic reel. To be used with 5,000 PSI hyd reels. Locate [#LOC].	894.00
3350-0033	Akron hydraulic hose reel for use with Hurst brand tools. Includes 100' 1/4" hose (up to 5,000 PSI) and reel mounted nylon roller unit (captive type). Location: [#LOC]. Hose Color: [#COL].	1,932.00
3350-0043	Akron hydraulic hose reel for use with Amkus brand tools. Includes 100' 1/4" hose (up to 10,500 PSI) and reel mounted nylon roller unit (captive type). Location: [#LOC]. Hose Color: [#COL].	2,982.00
3350-0045	Akron reel to be powder painted custom color. Requires approval from vendor on color. Location: [#LOC]. Reel Color: [#COL].	104.00
3365-0003	Overhead ladder rack door to be painted job color.	194.00
3365-0004	(2) pike pole storage tubes. Locate inboard side of rack with pike pole hooks stored in the up position.	373.00
3365-0010	(3) pike pole storage tubes. Locate inboard side of rack with pike pole hooks stored in the up position.	560.00
3365-0011	Floor mounted roll-out tray. Includes 250lbs. tray capacity. Mount on [#LOC] floor.	561.00
3365-0020	Zico Electric Drop Down Ladder Rack. Includes diamond plate spacer brackets with ladder rack controller located on the officer side pump panel.	4,228.00
3365-0025	Attic ladder mounting brackets (PR). Locate [#LOC].	265.00
3365-0026	Zico pike pole mounting brackets (PR). Locate on top of Zico Drop Down Ladder Rack.	139.00
3365-0027	Zico attic ladder mounting brackets (PR). Locate on top of Zico Drop Down Ladder Rack.	299.00
3365-0028	Hard Suction Storage Rack. Driver side compartment top. Includes spring hold downs and scuff plates behind spring mounts (as applicable).	318.00
3365-0030	Double Hard Suction Storage Rack. Driver side compartment top. Includes spring hold downs with scuff plates (as applicable).	632.00
3365-0031	Hard Suction Storage Rack. Officer side in adjustable track above ladders. Includes spring hold downs and scuff plates.	331.00
3365-0034	(2) pike pole storage tubes. Locate [#LOC].	273.00
3365-0035	Hard Suction Storage Rack. Officer side compartment top. Includes spring hold downs and scuff plates behind spring mounts (as applicable).	318.00
3365-0077	(2) pike pole storage tubes. Locate outboard side of rack with pike pole hooks stored in the up position.	373.00
3365-0078	(3) pike pole storage tubes. Locate outboard side of rack with pike pole hooks stored in the up position.	560.00
3370-0023	Tracks for adjustable shelf and/or adjustable tray in single depth or rescue style single depth compartment. Location: [#LOC].	158.00
3370-0025	Permanent shelf. Locate in [#LOC].	82.00
3370-0026	Adjustable shelf. For compartments that are full height/full depth or lower compartments with full depth. Location: [#LOC].	205.00
3370-0027	Tracks for adjustable shelf and/or adjustable tray in the lower area of the compartment. Location: [#LOC].	80.00
3370-0028	Tracks for adjustable shelf and/or adjustable tray in the upper area of the compartment. Location: [#LOC].	42.00
3370-0029	Adjustable shelf. For compartments with upper shallow depth. Location: [#LOC].	104.00
3370-0052	Adjustable shelf. For non-transverse compartments that are 16" or greater in depth. Location: [#LOC].	205.00
3370-0053	Adjustable shelf. For non-transverse compartments that are up to 15.99" deep. Location: [#LOC].	104.00
3370-0054	Tracks for adjustable shelf and/or adjustable tray in compartments 16" or greater in depth. Location: [#LOC].	158.00
3370-0055	Tracks for adjustable shelf in shallow compartments up to 15.99" deep. Location: [#LOC].	80.00
3380-0014	Roll-out generator tray. Includes tray interlock. Locate [#LOC].	668.00
3380-0018	Adjustable tool board. Includes upper and lower adjustable track and gas shock actuated. Tool board sized to compartment height and depth as applicable. Location(s): [#LOC]	691.00
3380-0019	Running board suction tray. Includes removable slats in bottom of tray. Location(s): [#LOC]	440.00
3380-0021	Hard suction hose storage tray. Locate on inboard side of overhead ladder rack. Includes (2) securing straps.	350.00
3380-0022	Floor mounted roll-out tray. Includes 500lbs. tray capacity. Location: [#LOC].	732.00
3380-0024	Adjustable mounted roll-out tray. Includes 250 lbs tray capacity. Location(s): [#LOC]	806.00
3380-0025	Adjustable mounted roll-out tray. Includes 500 lbs tray capacity. Location(s): [#LOC]	979.00
3380-0033	Hard suction hose storage tray. Locate on top of Zico Drop Down Ladder Rack.	702.00
3380-0060	Adjustable tool board with 500 lbs slides. Includes upper and lower adjustable track and gas shock actuated. Tool board sized to compartment height and depth as applicable. Location(s): [#LOC].	950.00
3380-0074	Tool board HD adjustable. Includes return style re-enforcing bends on vertical front and rear edges of tool board, upper and lower adjustable track and gas shock actuated. Tool board sized to compartment height and depth as applicable. Location(s): [#LOC]	738.00
3380-0076	Floor mounted roll-out tray with 500lbs capacity. Mount on [#LOC] floor.	561.00
3380-0077	Adjustable roll-out tray with 500 lbs capacity. Location(s): [#LOC]	806.00
3380-0079	Adjustable heavy duty tool board. Includes return style re-enforcing bends on vertical front and rear edges of tool board, upper and lower adjustable track and gas shock actuated. Tool board sized to compartment height and depth as applicable. Location(s): [#LOC]	738.00
3380-0080	Adjustable heavy duty peg tool board. Includes return style re-enforcing bends on vertical front and rear edges of tool board, upper and lower adjustable track and gas shock actuated. Tool board sized to compartment height and depth as applicable. Location(s): [#LOC]	877.00
3380-0081	Roll-out generator tray. Includes tray interlock. Locate [#LOC].	668.00

3380-0087	Adjustable tool board with 500 lbs slides for use with deep compartments. Includes upper and lower adjustable track with lock in / lock out latch. Tool board sized to compartment height and depth as applicable. Location(s): [#LOC].	950.00
3390-0003	Compartment [#LOC] to have the following storage package: (1) vertical partition 20" off rearward wall and the following located forward of the partition: (1) floor mntd roll-out tray w/250lb slds and (2) adjustable shelves. Rearward of partition: (1) adjustable tool board.	2,496.00
3390-0004	Compartment [#LOC] to have the following storage package: (1) vertical partition 20" off forward wall and the following located forward of the partition: (1) floor mntd roll-out tray w/250lb slds, (1) adjustable roll-out tray w/250lb slds and (1) adjustable shelf. Rearward of partition: (3) adjustable tool boards.	3,744.00

4000	**PUMPS**	
4005-0053	Hale QMAX-21L 1500 pump. Tradition.	20,953.00
4005-0054	Hale Qflo-23L 1250 pump. Tradition.	16,365.00
4005-0055	Waterous CS Single Stage Pump.	19,989.00
4005-0056	Waterous CSU Single Stage Pump.	24,444.00
4005-0085	Hale QMAX-21L 1750 pump. Tradition.	20,953.00
4010-0016	530 Gallon "T" Water Tank. Note: Any foam cell(s) will reduce the overall water capacity. Tank capacity is 530 US gallons / 441 Imperial gallons	4,784.00
4010-0017	780 Gallon "T" Water Tank. Note: Any foam cell(s) and/or storage options thru the tank will reduce the overall water capacity. Tank capacity is 780 US gallons / 649 Imperial gallons	5,297.00
4010-0018	1030 Gallon "T" Water Tank. Note: Any foam cell(s) and/or storage options thru the tank will reduce the overall water capacity. Tank capacity is 1030 US gallons / 857 Imperial gallons	6,596.00
4010-0019	1280 Gallon "T" Water Tank. Note: Any foam cell(s) and/or storage options thru the tank will reduce the overall water capacity. Tank capacity is 1280 US gallons / 1065 Imperial gallons	8,430.00
4010-0036	780 Gallon "R" Water Tank. Note: Any foam cell(s) and/or storage options thru the tank will reduce the overall water capacity. Tank capacity is 780 US gallon / 649 Imperial gallons.	5,233.00
4010-0037	1030 Gallon "R" Water Tank. Note: Any foam cell(s) and/or storage options thru the tank will reduce the overall water capacity. Tank capacity is 1030 US gallon / 857 Imperial gallons.	6,371.00
4010-0077	1250 Gallon "T" Water Tank. Note: Any foam cell(s) and/or storage options thru the tank will reduce the overall water capacity. Tank capacity is 1250 US gallons / 1040 Imperial gallons	8,430.00
4015-0002	Mechanical Speed Counter for Hale Pumps	267.00
4015-0007	Pump Cooler	138.00
4015-0008	Zinc Anodes for Hale Pump - (Pair) (1) Discharge side and (1) Intake Side	269.00
4015-0018	Valve Inlet MIV-E - Hale. Location: [#LOC]	2,872.00
4015-0026	Electronic Speed Counter for Waterous Pumps	263.00
4015-0039	Pump Seal Mechanical for Waterous Pump	595.00
4015-0041	Valve Monarch Electric - Waterous. Location: [#LOC]	4,683.00
4015-0044	Anodes for Waterous Pump - (Pair) (1) Discharge side and (1) Intake Side	325.00
4015-0075	Pump Seal Mechanical - Hale. For use with Tradition Hale pumps.	1,967.00
4015-0079	Valve Inlet MIV-E - Hale. Manual Override will be behind the Pump Panel. " Tradition" [#LOC]	2,872.00
4015-0082	Electric Over Air Actaution Pump Cooler Valve	366.00
4015-0083	Electric Over Air Actaution Engine Cooler Valve	235.00
4015-0084	Pump Air Blow Out with 1/4 Snubber Vavlve.	209.00
4015-0086	Pump Cooler 1/4 Turn Valve	219.00
4015-0087	Engine Cooler 1/4 Turn Valve	219.00
4015-0088	Portable/Qmax Pump Shall be with Manifold and check valves for Front Bumper Turret and Ground Sweep. To be use dearing Pump&Roll operation.	758.00
4015-0090	Akron Test Port for Master Gauges	79.00
4015-0091	Pump Cooler with .75 1/4 turn valve.	248.00
4015-0092	Hale Fill Thieft Steamers to be Flush + 2 Location [#LOC]	1,341.00
4020-0002	Dump Valve Mounting Plate	490.00
4020-0004	Newton Dump Mounting Plate	467.00
4100-0000	10 gallon integral foam tank for [#LOC]. Foam tank capacity will reduce the water tank capacity.	808.00
4100-0006	40 gallon integral foam tank for [#LOC]. Foam tank capacity will reduce the water tank capacity.	1,026.00
4100-0008	20 gallon integral foam tank for [#LOC]. Foam tank capacity will reduce the water tank capacity.	869.00
4100-0009	30 gallon integral foam tank for [#LOC]. Foam tank capacity will reduce the water tank capacity. Tank capacity is 30 US gallon / 25 Imperial gallons.	942.00
4405-0020	Booster Reel. Reel to have capacity of 200' of 1" (not included). Includes stirrup style rewind switch. Locate rear body compartment.	2,447.00
4405-0045	Booster Reel. Reel to have capacity of 200' of 1" (not included). Locate [#LOC].	2,273.00
4415-0008	1.5" Front Bumper Discharge Akron Manual Valve	1,317.00
4415-0012	1.5" Crosslay with Akron Manual Valve; Location: [#LOC]	819.00
4415-0018	2.5" Left Front Hosebed Discharge Akron Manual Valve	1,233.00
4415-0020	2.5" Right Front Hosebed Discharge Akron Manual Valve	1,233.00
4415-0022	2.5" Left Rear Discharge Akron Manual Valve Location: [#LOC]	997.00
4415-0028	2.5" Right Rear Discharge Akron Manual Valve Location: [#LOC]	997.00
4415-0034	3" Right Pump Panel Discharge Akron Manual Valve Location: [#LOC]	1,370.00
4415-0041	3" Deck Gun Discharge Akron Manual Valve	1,399.00
4415-0058	2.5" Crosslay Akron Manual Valve. To be located rearward of 1.5" crosslay(s) if applicable. Location: [#LOC]	987.00
4415-0065	1.5" Double Speedlay with Akron Manual Valves	1,605.00
4415-0158	3" Left Panel Discharge Top Mount Akron Manual Valve w/30 Degree Droop Location: [#LOC]	1,728.00
4415-0161	2.5" Left Panel Discharge Akron Manual Valve w/30 Degree Droop Location: [#LOC]	1,072.00
4415-0164	2.5" Right Panel Discharge Akron Manual Valve w/30 Degree Droop Location: [#LOC]	1,072.00
4415-0165	3" Right Panel Discharge Akron Manual Valve w/30 Degree Droop Location: [#LOC]	1,638.00

4415-0517	4" Right Pump Panel Discharge with 3" Akron Manual Valve w/Droop Location: [#LOC]	1,880.00
4415-0550	2.5" Double Speedlay with Akron Manual Valves	1,972.00
4415-0552	1.5" Front Bumper Crosslay Discharge Akron Manual Valve	1,848.00
4415-0553	2.5" Left Front Hosebed Discharge Akron Manual Valve located outlet shall be located 13.625" from inside hosebed wall.	1,233.00
4415-0555	3" Deck Gun Discharge Akron Manual Valve with no Plumbing form the valve to deck gun channel Dealer to install Extend-A-Gun and Plumbing from the valve to the channel..	1,299.00
4415-0616	Third Right Front Hosebed Discharge 2.5" Akron Manual Valve.	1,233.00
4415-0617	2.5" Left Panel Discharge Akron Manual 3" Valve w/30 Degree Droop Location: [#LOC]	1,370.00
4415-0618	2.5" Auxillary Deck Gun Discharge Akron Manual Valve. Plumbed from foam manifold and "Y" into Deck Gun pipe downstream from main Deck Gun discharge valve.	959.00
4415-0671	1.5" Double Speedlay with Akron Manual Valves	1,605.00
4415-0718	1.5" Single Speedlay with Akron Manual Valves to hold a 100ft of 1.75.	869.00
4417-0088	Bleeder Drain Valve Plumbed to: [#LOC]	96.00
4417-0099	Akron Wireless Deck Gun Remote Monitor Controller.	1,347.00
4430-0014	2.1A Hale Foam Logix Foam System	5,996.00
4430-0015	3.3 Hale Foam Logix Foam System	12,739.00
4430-0016	5.0 Hale Foam Logix Foam System	14,362.00
4430-0074	Pneumax 140-SP Silver Compressed Air Foam System. For use with Tradsition and Waterous pumps.	14,689.00
4430-0079	The foam system performance shall be tested and certified in compliance with 2009 NFPA 1901.	240.00
4432-0063	Hale Foam Logix Air Actuated A/B Selector	3,101.00
4432-0085	CAFS to be provided on the following preconnects: Preconnect #1 and Preconnect #2.	674.00
4432-0086	CAFS to be provided on the following additional preconnect: Preconnect #3 or Officer side rear/hosebed discharge.	338.00
4432-0087	CAFS to be provided on the following additional discharge: Front jumpline.	338.00
4432-0105	A/B Foam Selector locate Driver side walk way recess in box on diamond plate panel at front of module.	144.00
4435-0001	Class 1 Intelli-Tank Water Tank Level Gauge	409.00
4435-0002	Class 1 Intelli-Tank Foam Tank Level Gauge	422.00
4435-0013	Class 1 Pressure 4.5" Gauge (30-0-600 PSI)	161.00
4435-0014	Dual Read 4.5" Pressure Gauge (30-0-600 psi/100-0-4140 KPA)	241.00
4435-0015	2.5" Class 1 Pressure Gauge (30-0-600). Discharge: [#LOC]	115.00
4435-0016	Dual Read 2.5" Pressure Gauge (30-0-600 psi/100-0-4140 KPA). Discharge: [#LOC]	163.00
4435-0047	Class 1 Tank Level Intel Water Gauge Additional Location: [#LOC]	470.00
4435-0069	Enfo IV System on Pump Operator's Panel	781.00
4435-0152	2.5" Class 1 Pressure Gauge (30-0-600). Discharge with Black Face and White Letters: [#LOC]	122.00
4440-0004	2.5" Side Suction Top Mount Control Handle Akron Manual Valve Location: [#LOC]	1,231.00
4440-0005	2.5" Left Intake Akron Manual Valve	928.00
4440-0006	2.5" Right Intake Akron Manual Valve	928.00
4440-0014	5" Front Intake without Valve	2,957.00
4440-0016	5" Right Rear Intake No Valve	2,256.00
4440-0060	5" Rear Intake with no valve. Located below officer side storage tunnel. Includes short handle cap (ship looses).	2,775.00
4445-0004	Front Intake Swivel 5" Polished Chrome	1,756.00
4445-0007	Intake Adapter 5" FNPT x 6" MNST for Front Intake	440.00
4445-0016	Valve Relief Intake - Hale 2.5"	530.00
4445-0020	Intake Adapter 5" FNST x 6" MNST for Front Intake	440.00
4445-0022	Intake Adapter 5" FNPT x 6" MNST for Rear Intake	440.00
4445-0024	Intake Adapter 5" FNPT x 5" MNST for Front Intake	326.00
4445-0025	Intake Adapter 5" FNPT x 5" MNST for Rear Intake	326.00
4445-0038	Waterous Intake Pressure Relief Valve.	1,216.00
4445-0039	Intake Adapter 2-1/2"MNST X 3" FNST Swivels with plug.	201.00
4450-0010	2" Tank Fill Akron Manual Valve	922.00
4450-0020	2.5" Rear Direct Tank Fill. Location: [#LOC]	1,116.00
4450-0022	3" Tank to Pump Akron Manual Valve	972.00
4450-0026	5" Rear Jet Dump No Valve. Include 1-1/2" inline valve and high pressure hydraulic hose connected to the 1-1/2" internal tank piping which runs to the rear of the booster tank.	1,867.00
4450-0030	Newton Directional Chute. Includes chute support bracket and support bolts mounted each side on trailing edge of body/beavertails.	1,342.00
4450-0031	DMP NWTN RR ELEC VLV/CHT	4,519.00
4450-0094	Driver side lower pump panel mounted 2.5" direct tank fill.	1,774.00
4450-0101	Newton Dump with electrically actuated valve and manually actuated chute. Electric dump valve control to be located to the driver side rear within reach from the ground.	4,090.00
4450-0104	6" Rear Gravity Dump No Valve	2,157.00
4450-0106	6" Rear Jet Dump w/6" Electric/Air Butterfly Valve with Control Switching in Cab and Driver side Rear.	3,089.00
4450-0113	5" Rear Jet Dump (No valve). For use with a center slam strip rear end.	1,685.00
4450-0115	Newton Dump with Electric Operated Valve.	3,203.00
4450-0119	3" Tank To Pump Akron Manual Valve w/4" Plumbing	990.00
4450-0120	2.5" Rear Tank Inlet. Includes Water Level Gauge Located in B1 Compartment	1,197.00
4450-0121	3" Tank To Pump Akron Air Actuated Valve w/4" Plumbing	1,360.00
4450-0122	3" Tank To Pump Akron Electric Actuated Valve w/4" Plumbing	2,796.00
4450-0128	Officer side lower pump panel mounted 2.5" direct tank fill. Not available with with rear intake or front intake with auxiliary intake offset to rear.	1,774.00

4450-0133	3" Tank To Pump Akron Air Actuated Valve w/4" Plumbing	1,360.00
4450-0134	3" Tank To Pump Akron Manual Valve w/4" Plumbing	990.00
4460-0002	Hose Reel Blow-out Primary	213.00
4460-0034	Cab jack access door. Located on officer side pump panel in upper rearward area. Includes twist and turn latch.	214.00
4465-0005	Class1 Captain pressure governor.	2,442.00
4475-0000	Pump certification 750-2250 GPM	2,164.00
5000	**ELECTRICAL SYSTEMS**	
5010-0002	Multiplex electrical system for pumper / tanker / rescue.	2,923.00
5010-0003	Multiplex modem kit. Includes cable, modem, and adapter harness.	765.00
5010-0004	Multiplex Data Logger	542.00
5010-0013	Vehicle data recorder - 2009 NFPA compliant. Includes occupant detection with display. Display location: [#LOC].	3,640.00
5010-0015	Additional CrewGuard display for use with VDR. Location: [#LOC].	413.00
5100-0000	Foot Switch to control air horns located [#LOC]	97.00
5100-0001	Switch circuit three way. Includes (1) additional switch. An additional switch required for more than two locations. Location: [#LOC].	137.00
5100-0006	Foot Switch to control Q2B located [#LOC]	97.00
5100-0007	Foot Switch to control electronic siren located [#LOC]	97.00
5100-0011	Switch 12V for 110-240V (EA). Location: [#LOC].	356.00
5100-0022	Push-button hose reel switch. Location: [#LOC]	153.00
5100-0029	Stirrup style hose reel switch. Location: [#LOC]	153.00
5100-0050	Push button testswitch for tank level gauge, push button wired "hot" to batteries to allow checking tank level in fire station without having to power up truck electrical system. Located on operator pump panel.	289.00
5110-0017	Back up alarm 97 dB(A).	85.00
5110-0043	Back up alarm Federal Reactor Model 210350 self adjusting.	149.00
5110-0052	12V power distribution module. Includes (6) battery hot and (6) switched hot circuits. 100 amps max (IATS). Location: [#LOC]	257.00
5110-0067	Back up alarm Preco 97 dB(A) warble tone.	225.00
5130-0001	Cord reel electric with 200' of 10/3 black cable. Locate [#LOC]	1,808.00
5130-0002	Cord reel electric with 200' of 10/3 yellow cable. Location(s): [#LOC]	2,041.00
5130-0003	Cord reel electric with 200' of 10/4 black cable. Location: [#LOC]	2,036.00
5130-0004	Cord reel electric with 200' of 10/4 yellow cable. Location [#LOC]	2,641.00
5130-0006	Cord reel rollers mounted on reel in [#LOC]	294.00
5130-0008	Cord connector. Daniel Woodhead 3 wire NEMA L5-15 twist lock female located on cord for reel in [#LOC]	69.00
5130-0009	Cord connector. Daniel Woodhead 3 wire NEMA L5-20 twist lock female located on cord for reel in [#LOC]	95.00
5130-0010	Cord connector. Daniel Woodhead 4 wire NEMA L14-20 twist lock female located on cord for reel in [#LOC]	95.00
5130-0012	Junction box Circle-D with four (4) 3-wire Nema L5-15 110Volt 15 Amp twist lock receptacles. Located on cord for reel in [#LOC]	622.00
5130-0013	Junction box Circle-D with four (4) 3-wire Nema L5-20 110Volt 20 Amp twist lock receptacles. Located on cord for reel in [#LOC]	622.00
5130-0014	Circle D wall/floor mounting box. Locate box for use with reel in or on [#LOC]	121.00
5130-0015	Junction box Circle-D with two (2) 15 amp straight blade and two (2) 20 amp twist lock receptacles. Located on cord for reel in [#LOC]	785.00
5130-0024	Electric cord reel rewind switch. Switch located [#LOC].	97.00
5130-0026	Cord connector. Fire Power 3 wire 20A/110V female located on cord for reel in [#LOC]	498.00
5130-0027	Cord connector. Duraline 4 wire 20A/220V female located on cord for reel in [#LOC]	130.00
5130-0028	Cord reel rollers mounted on reel.	294.00
5130-0030	Junction box Circle-D with one (1) straight blade and three (3) twist lock receptacles. Located on cord for reel in [#LOC]	785.00
5130-0033	Junction box Circle-D with four (4) 3-wire Nema 5-15 110Volt 15 Amp straight blade receptacles. Located on cord for reel in [#LOC]	622.00
5130-0035	Junction box Circle-D with (3) L5-15 and (1) L5-20 110Volt twist lock receptacles. Located on cord for reel in [#LOC].	622.00
5130-0038	Junction box Circle-D with (2) L5-20 twist lock and (2) 5-20 110Volt straight blade duplex receptacles. Located on cord for reel in [#LOC].	622.00
5130-0041	Cord reel rollers bracket mounted on top of [#LOC]	294.00
5130-0042	Junction box Circle-D with four (4) 3-wire Nema 5-20 110Volt 20 Amp duplex receptacles. Located on cord for reel in [#LOC].	689.00
5130-0044	Junction box Akron with (2) 5-20 125v 20 Amp duplex recepts and (2) L5-20 125v 20 Amp twist lock recepts. Located on cord for reel in [#LOC].	489.00
5130-0045	Akron model EJB-VMT-TP mounting box. Locate box for use with reel in or on [#LOC].	238.00
5130-0046	Junction box Circle-D with one (1) 5-20 straight blade and three (3) L5-20 twist lock receptacles. Box wired as 240v with individual circuit breakers on box. Located on cord for reel in [#LOC].	785.00
5130-0048	Junction box Circle-D with (2) NEMA 5-20 120V GFCI duplex and (2) NEMA L6-20 220V twist lock receptacles. Located on cord for reel in [#LOC].	785.00
5130-0049	Cord reel electric for 200' of 10/3 cable. Cable not included. Location(s): [#LOC]	1,825.00
5130-0054	Cord reel electric with 200' of 8/3 black cable. Locate [#LOC]	3,097.00
5130-0057	Mounting box for Woodhead junction box. Locate box for use with reel in or on [#LOC].	222.00

5130-0059	Junction box Circle-D with four (4) FirePower FP11 110Volt 20 Amp receptacles. Located on cord for reel in [#LOC].	1,015.00
5150-0017	License plate light LED with chrome housing located at the rear of the body.	113.00
5150-0025	Marker light LED body/cab package. E-One custom cab and pumper or tanker body only.	1,131.00
5150-0042	Federal Signal LED taillights. Includes 4" diameter red LED stop/tail, amber turn and LED clear backup.	485.00
5150-0059	Federal Signal QuadraFlare LED vertical mount taillights. Includes LED stop/tail, arrow turn and backup lights with vertical Cast 3 housing and weatherproof connectors.	963.00
5200-0001	Breaker box 12 place single phase. Includes main breaker. Note: If gen is 6KW or less, main will occupy 2 places leaving 10 available. Locate [#LOC].	756.00
5250-0017	Generator Honda EM5000SXK with 4.5KW continuous output. Generator location: [#LOC].	5,255.00
5250-0037	Generator Smart Power 8KW hydraulic model HR-8 (with top mount cooler). Includes generator control / PTO engage switch and a gauge panel located adjacent to breaker box. Generator location:[#LOC].	15,953.00
5250-0055	Generator Smart Power 8KW hydraulic model ER8. Includes generator control / PTO engage switch and a gauge panel located adjacent to breaker box. Generator location: [#LOC]	15,953.00
5250-0060	Generator space only, for dealer installed generator	254.00
5255-0001	3rd party generator test with pump.	76.00
5260-0002	Remote control starting kit for Honda EM3800SX, EM5000SX and EM6500SX generators. Locate [#LOC].	615.00
5300-0021	Light bar Federal Signal JetStream 60" LED. Red Solaris reflectors with clear domes. NFPA Compliant, does not require 2 addl side facing bars. Location: Centered on the front cab roof	2,278.00
5300-0024	Light bar Federal Signal Aerodynic 25RQL-Fast 52" with red/clear lens. Location: Centered on the front cab roof	1,320.00
5300-0195	Light bar Federal Signal JetStream 60" LED. Red driver/Blue officer Solaris reflectors. Location: Centered on the front cab roof	1,998.00
5310-0000	Light bar Federal Signal Signal Master SML6.	753.00
5310-0002	Light bar Federal Signal Signal Master SMLED6.	1,287.00
5310-0022	Light bar Federal Signal Signal Master Cuda LED 34" with 6 lights.	1,299.00
5380-0008	Compartment light package incandescent for small bodies.	426.00
5380-0027	Ground light package for cab and body - small.	396.00
5380-0029	Ground light package for cab and body - large.	593.00
5380-0051	Compartment light ROM LED for medical cabinet (EA).	387.00
5380-0085	Compartment light package incandescent for small bodies.	426.00
5380-0111	Compartment light Amdor LED for medical cabinet (EA).	224.00
5390-0001	Hosebed Light Unity. Locate at front area of hosebed. Switched with work light switch in cab	150.00
5390-0007	Deck/Scene light circuit wiring through chassis reverse. Requires rear deck or scene light.	65.00
5390-0008	Federal Signal GH Scene lights (PR). Switch in cab (driver and officer side facing lights switched separately). Locate [#LOC]	368.00
5390-0025	Cab scene lights are to be switched with cab doors in addition to standard.	65.00
5400-0003	Engine Compartment Light (EA).	105.00
5400-0010	Incandescent pump compartment light (EA).	114.00
5400-0020	Federal NightFighter Light with Internal Pole. Locate [#LOC]. Switched on light head.	1,079.00
5400-0033	Cab Dome Lts Red/White 4" incandescent. White light wired thru door and light assembly mounted rocker switch. Red light thru light assembly mounted rocker switch.	483.00
5400-0038	Spotlight - 6" Unity (PR) cab post mount	379.00
5400-0039	Spotlight Specialty 2150 hand held located on officer's side of cab dash - hardwired.	324.00
5400-0042	Maplight-Sunnex [#LOC].	277.00
5400-0065	Maplight-Little Lt 18" Flex LED. Location: [#LOC].	214.00
5400-0097	Maplight-Havis Shield 12" Flex LED. Location: [#LOC].	208.00
5400-0104	Spotlight Specialty 2150 hand held located on officer's side, side facing engine cover offset forward below cab dash - hardwired.	324.00
5450-0008	Quartz light Fire Research Focus 750W/110V model FCA510E-S75-SW with internal pull up pole. Location(s): [#LOC].	1,287.00
5450-0019	Quartz light Fire Research Focus 750W/110V model FCA802-S75-01 with brow mount. Location(s): [#LOC].	777.00
5450-0042	Quartz light MagnaFire 70W/12V model KR-931-I-S with internal pole and switch on light head. Includes switch on warning light switch panel in cab. Location(s): [#LOC]	1,316.00
5450-0044	Quartz light MagnaFire 70W/12V model KR-1531 with cab brow mount. Includes switch on warning light switch panel in cab. Location(s): [#LOC]. Not available in front center due to DOT lights.	1,218.00
5450-0048	Quartz light MagnaFire 750W/120V model KR-936-I with internal pole. Location(s): [#LOC]	890.00
5450-0052	Quartz light MagnaFire 750W/120V model KR-1536 with cab brow mount. Location(s): [#LOC]. Not available in front center due to DOT lights.	705.00
5450-0079	Quartz light MagnaFire 750W/120V model KR-1536 with cab brow mount. Light head and mount to be powder coated black. Location(s): [#LOC]. Not available in front center due to DOT lights.	746.00
5450-0088	Quartz light MagnaFire 70W/12V model KR-SB-631 without pole. Includes switch on warning light switch panel in cab. Location(s): [#LOC].	1,324.00
5450-0093	Quartz light MagnaFire 70W/12V model KR-3551 with cab brow mount. Includes switch on warning light switch panel in cab. Quest cab only. Location(s): [#LOC].	1,218.00
5450-0094	Quartz light Extenda-Lite 750W/110V model E-4750-EX-TL-UI-EX. Location(s): [#LOC].	739.00
5450-0097	Quartz light MagnaFire 70W/12V model KR-2551 with cab brow mount. Includes switch on warning light switch panel in cab. Location(s): [#LOC]. Not available in front center due to DOT lights.	1,218.00
5450-0113	Quartz light MagnaFire 150W/12V model KR-932-I-S with internal pole and switch on light head. Includes switch on warning light switch panel in cab. Location(s): [#LOC].	1,406.00
5470-0000	Receptacle twist lock 15A/110V 3 wire NEMA L5-15 with cover plate. Location: [#LOC]	261.00

5470-0001	Receptacle twist lock 20A/110V 3 wire NEMA L5-20 with cover plate. Location: [#LOC]		273.00
5470-0003	Receptacle household 15A/110V duplex 3-prong NEMA 5-15 with cover plate. Location: [#LOC]		238.00
5470-0016	Receptacle shoreline 30A/110V with auto transfer switch. The receptacle shall be located [#LOC].		878.00
5470-0017	Receptacle household 20A/110V duplex 3-prong NEMA 5-20 with cover plate. Location: [#LOC]		248.00
5500-0009	Federal PA300 siren recessed mounted.		592.00
5500-0011	Federal Q2B siren - Pedestal mounted on bumper. Location: [#LOC].		2,290.00
5510-0013	Speaker Federal Dynamax MS100-EF thru bumper. Location: [#LOC].		460.00
5510-0029	Speaker Federal Dynamax ES100-EF thru bumper. Location: [#LOC].		460.00
5550-0019	Federal Signal MOD1F 8/2 LED lower level warning light package. Includes (8) MOD1F LED surface mounted lights with (2) Model 3300-04 LED lights with an external flasher. Locate side facing lights: [#LOC].		2,144.00
5550-0052	Flash rate for Federal LED lower level warning lights to be set at pattern 2, alternating triple flash (102 TFPM).		75.00
5550-0057	Federal Signal QuadraFlare LED lower level warning light package. Includes (8) QL64XF-R LED light heads with bezels and (2) Model 3300-04 LED light heads. Locate side facing lights: [#LOC].		1,806.00
5550-0067	Flash rate for Federal QuadraFlare LED lower level warning lights to be set at pattern 4, alternating quad flash (75 QFPM).		75.00
5550-0108	Federal Signal QuadraFlare LED lower level warning light package. Includes (4) QL64XF-R LED light heads, (4) QL64XF-B LED light heads, (1) Model 360501-04 LED light head and (1) Model 360501-03 light head. Lights to alternate red/blue around unit; see specificaton. Locate side facing lights: [#LOC].		1,876.00
5550-0116	Federal Signal QuadraFlare LED lower level warning light package. Includes (7) QL64XF-R LED, (1) QL64XF-B LED light heads with bezels and (2) Model 360501-04 LED light heads. Locate side facing lights: [#LOC].		1,806.00
5600-0034	Federal Model SY12FS Sentry (PR) with [#COL] domes. Location: [#LOC].		330.00
8000	**PAINT, LETTERING, STRIPING**		
8100-0071	Undercoating E-One		248.00
8100-0088	Painted trim stripe on chassis wheels (per axle). Color to be: [#COL]		149.00
8100-0122	Cab paint FLNA 3225 Red. International.	INT	184.00
8100-0123	Cab Paint FLNA 3035 Red. International. Tradition.	INT	184.00
8100-0124	Cab Paint FLNA 3047 Red. International. Tradition.	INT	184.00
8100-0125	Cab paint FLNA 3221 red. International. Tradition.	INT	184.00
8100-0126	Cab Paint FLNA 4006 White. International.	INT	184.00
8100-0127	Cab Paint FLNA 4095 White. International. Tradition.	INT	184.00
8100-0128	Cab Paint FLNA 6051 Lime Green International.	INT	184.00
8100-0129	Cab Paint FLNA 6257 Lime Green. International.	INT	184.00
8100-0130	Cab Paint FLNA 6074 Lime Green. International.	INT	184.00
8100-0132	Cab paint two tone. Upper FLNA 4006 white International.	INT	899.00
8100-0133	Paint Cab FLNA 1219 Yellow. International	INT	184.00
8100-0134	Paint Cab FLNA 1218 Yellow. International	INT	184.00
8100-0135	Paint Cab Dupont L769467 EG Red	INT	184.00
8100-0137	Cab paint two tone. Upper FLNA 4145 black. International.	INT	899.00
8100-0139	Cab paint two tone. Upper FLNA 4006 white / lower FLNA 6257 lime green. International.	INT	899.00
8100-0140	Cab paint two tone. Upper FLNA 4006 white / lower FLNA 6074 lime green. International.	INT	899.00
8100-0154	Paint upper Cab DuPont 767681 EG Black. Freightliner.	FL	1,858.00
8100-0155	Cab paint two-tone DuPont L0006 EG White (Upper). Freightliner.	FL	1,858.00
8100-0158	Cab paint two-tone DuPont L0006 EG White (Upper) P2450 EG Red (Lower). Freightliner.	FL	1,858.00
8100-0159	Cab paint two-tone DuPont L0006 EG White (Upper) P2451 EG Red (Lower). Freightliner.	FL	1,858.00
8100-0160	Cab paint two-tone DuPont 767681 EG Black (Upper) L6636 EG Red (Lower). Freightliner.	FL	1,858.00
8100-0161	Cab paint two-tone DuPont L0006 EG White (Upper) P2518 EG Lime Green (Lower). Freightliner.	FL	1,858.00
8100-0162	Cab paint two-tone DuPont L0006 EG White (Upper) P2454 EG Lime Green (Lower). Freightliner.	FL	1,858.00
8100-0163	Cab paint two-tone DuPont L0006 EG White (Upper) P2519 EG Lime Green (Lower). Freightliner.	FL	1,858.00
8100-0164	Cab paint two-tone DuPont 767681 EG Black (Upper) L6572 EG Red (Lower). Freightliner.	FL	1,858.00
8100-0169	Painted stripe - 4" wide hockey stripe, straight across front and may contour as it transitions from Cab to Body on each side. Color: [#COL]. Location: [#LOC].		3,830.00
8100-0174	Painted stripe - 12" wide hockey stripe, straight across front and may contour as it transitions from Cab to Body on each side. Color: [#COL]. Location: [#LOC].		4,787.00
8100-0176	Paint E-One chassis cab - Sikkens paint. Color: [#COL].	Typhoon	4,764.00
8100-0177	Cab paint Sikkens two-tone. Upper area of cab to be painted [#COL].	Typhoon	1,072.00
8100-0182	Paint Body - Small - For Pumpers, S/A Tankers and Rescues. Sikkens paint. Color: [#COL].		1,464.00
8100-0189	Cab paint two-tone DuPont 767681 EG Black (Upper) 7744 EG Lime Green (Lower). Freightliner.	Fl	1,858.00
8100-0191	International cab paint. Paint color [#COL].	INT	184.00
8100-0192	Freightliner cab two tone. Upper paint color [#COL]	FL	2,207.00
8100-0193	International cab two tone. Upper paint color [#COL]	INT	899.00
8200-0000	Scotchlite Letter (Each) - 3". Color [#COL].		15.00
8200-0007	Sign Gold Letter (Each) - 3"		16.00
8200-0011	Scotchlite Letters (60) - 3". Color [#COL].		647.00
8200-0012	Sign Gold Letters (60) - 3"		942.00
8200-0018	Scotchlite Letters (90) - 3". Color [#COL].		808.00
8200-0020	Sign Gold Letters (90) - 3".		1,253.00
8200-0021	Sign Gold Letters (120) - 3".		1,562.00
8200-0022	Shade and outline for lettering.		74.00
8200-0027	Scotchlite Letter (Each) - 5". Color [#COL].		22.00
8200-0028	Sign Gold Letter (Each) - 5"		24.00
8200-0040	Gold leaf letters (90) - 3".		3,131.00

8200-0045	Gold leaf letters (120) - 3".	3,644.00
8200-0047	Sign Gold Letter (Each) - 4"	20.00
8300-0002	NFPA Scotchlite Stripe - 4" wide and straight on front, sides and rear of cab and body. Color: [#COL]. Location: [#LOC].	779.00
8300-0003	NFPA Scotchlite Stripe - 6" wide and straight on front, sides and rear of cab and body. Color: [#COL]. Location: [#LOC].	813.00
8300-0006	NFPA Scotchlite Stripe - 6" wide with "Z". Stripe straight on front, sides and rear of cab and body. "Z" location to be specified by customer. Color: [#COL]. Location: [#LOC].	1,357.00
8300-0011	Scotchlite stripe (PR) 1/2" located 1/2" above and below existing stripe. Color: [#COL].	460.00
8300-0012	Scotchlite stripes (4) 1/2" located (2) above and (2) below existing stripe. Stripes to be spaced 1/2" apart. Color: [#COL].	915.00
8300-0013	NFPA Scotchlite Stripe - 2" and 4" wide with "Z". Stripe straight on front, sides and rear of cab and body. "Z" location to be specified by customer. 2" above 4" with 1" gap between stripes. Color: [#COL]. Location: [#LOC].	2,008.00
8300-0016	Paint Break Sign Gold Chassis Stripe - 3/4" Wide - Black, Gold, Black. To be located above existing paint break.	320.00
8300-0025	1/4" Pinstripe above and below existing Scotchlite stripe. Color: [#COL].	737.00
8300-0026	Scotchlite stripe 1" located 1" above and below existing stripe. Color: [#COL].	551.00
8300-0027	NFPA Scotchlite 4" wide hockey stripe, straight across front and may contour as it transitions from Cab to Body on each side. Color: [#COL]. Location: [#LOC].	1,272.00
8300-0028	NFPA Scotchlite 6" wide hockey stripe, straight across front and may contour as it transitions from Cab to Body on each side. Color: [#COL]. Location: [#LOC].	1,357.00
8300-0039	Scotchlite stripe 1" located .5" above and below existing stripe. Color: [#COL].	551.00
8300-0046	Scotchlite stripe (PR) 1/2" located directly above and below existing stripe. Color: [#COL].	460.00
8300-0048	Paint break scotchlite chassis stripe - 3/4" Wide - Black, [#COL], Black. To be located above existing paint break.	561.00
8300-0066	NFPA Scotchlite Stripe - 4" wide with "Z". Stripe straight on front, sides and rear of cab and body. "Z" location to be specified by customer. Color: [#COL]. Location: [#LOC].	1,272.00
8300-0071	Paint break scotchlite chassis stripe - 3/4" Wide - [#COL]. To be located above existing paint break.	561.00
8300-0085	Scotchlite stripe 1" located directly above and below existing stripe. Color: [#COL].	551.00
8300-0086	Scotchlite 6" wide cab hockey stripe. Hockey located on front cab doors up to top of cab. Color: White.	450.00
8300-0088	NFPA Scotchlite Stripe - 4" wide and straight on sides and rear of body only. Color: [#COL]. Location: [#LOC].	681.00
8300-0090	Scotchlite stripe 1.5" located directly above and below existing stripe. Color: [#COL].	584.00
8300-0091	1/4" Scotchlite pinstripe above and below existing stripe. Color: [#COL].	842.00
9000		
9300-0003	Compressed Air Foam System Training Pneumax	2,796.00
9300-0009	Manuals, Operator and Service CD-ROM.	287.00
9300-0017	Manuals Printed (Set)	752.00
9300-0018	Manuals, Operator and Service CD-ROM (additional set)	41.00

Notes:

1) Availability of options are limited by other options selected, and not all options are available in every chassis/apparatus configuration. Selection of an option may require several of the above parts/items to complete the option package.

2) Certain options, alone or in combination with other options, may require heavier axle/suspension packages, longer frames, or reinforced frames at additional cost per the above price list.

3) To configure options, the E-One State Term Schedule authorized dealer will use quote configuration software to select the components necessary to effect the option, feature, or configuration requested and quote the total option price.

Fire Apparatus Quotation for:
STATE OF OHIO TERM SCHEDULE

Quotation Number: 35825 Rev: 19

Unit Description: PMPR-TYPH

Quote Description: Mainline Pumper Custom – Typhoon Chassis Salesperson:

Salescode	Extended Description	Qty	
TESTING COMPLIANCE STANDARD			
1001-0015	The E-ONE supplied components of the vehicle shall meet the requirements of NFPA 1901, 2009 edition.	1	
BUMPERS			
1160-0000	Bumper 10" stainless steel	1	
1160-0011	4" Front Bumper Extension.	1	
FRAME ASSEMBLY			
1250-0003	Frame 10.25 x 3.5 x .375 chassis.	1	
AXLE OPTIONS			
1025-0003	Meritor FL941 front axle 16,000lb	1	
1025-0016	Meritor RS-24-160 single rear axle 24,000lb capacity	1	
1025-0029	Front Shock absorbers	1	
SUSPENSIONS			
1070-0001	Rear suspension springs rated equal to the capacity of the axle	1	
WHEEL OPTIONS			
1050-0044	Accuride aluminum wheels for front axle (2).	1	
1050-0045	Accuride aluminum wheels for rear axle (4).	1	
TIRE OPTIONS			
1060-0001	Two Michelin 315 tires model XZA-1 for front axle	1	
1060-0015	Four Michelin 11R rear tires with Mud and Snow tread	1	
1060-0050	Tire pressure monitoring valve stem caps.	1	

Salescode	Extended Description	Qty	
BRAKE SYSTEMS			
1100-0000	16-1/2" x 6" S-cam brakes with ArvinMeritor automatic slack adjusters for front axle	1	
1100-0002	ArvinMeritor 16-1/2" x 7" S-cam brakes with cast brake drums for a single rear axle	1	
1100-0005	Brake system air 4X2/4X4	1	
1100-0006	Parking brake release mounted on the driver's side lower dash	1	
AIR SYSTEM OPTIONS			
1110-0000-001	Inlet for air system. Location: driver door jamb	1	
1110-0002	Air dryer Bendix AD-9	1	
1110-0006	Air lines nylon	1	
1110-0026	Air horns recessed in bumper (PR)	1	
ENGINES & TRANSMISSIONS			
1200-0017	Push button transmission selector	1	
1200-0020	Trans Synd synthetic transmission fluid for EVS 3000.	1	
1200-0097	Electronically limited speed to 68 MPH maximum. Note: Max speed may be set at 65 MPH due to tire rating.	1	
1200-0125	Eng/Trans Cummins ISL 370HP/EVS3000 2010 EPA compliant engine.	1	
SECONDARY BRAKING			
1125-0002	Brake Jacob's engine compression	1	
COOLING PACKAGE			
1800-0013	Cooling system for use with Cyclone II X, Typhoon X, and Quest chassis. For use with 2010 EPA engines. Includes coolant recovery system.	1	
FUEL SYSTEMS			
1350-0003	Fuel system 50 gallon	1	
1350-0013	Fuel water Racor separator to be a bottom drop out style. Shall include indicator light and audible alarm.	1	
1350-0022	Fuel line hose rubber.	1	
ALTERNATOR			
1700-0003	Alternator Leece Neville. (270 amp SAE/240 NFPA rating).	1	
BATTERIES			
1400-0002	Battery four group 31 1000CCA	1	

Salescode	Extended Description	Qty	
CHASSIS OPTIONS			
1680-0006	Drivelines 1710	1	
1680-0011	Tow eyes rear below body painted	1	
1680-0042	Tow hooks front painted in the down position.	1	
1680-0145-J74	Diesel Exhaust Fluid (DEF) 5 gallon tank. Location: R1 floor offset forward.	1	
CAB MODEL			
1520-0013	Typhoon X medium cab with 58" CA	1	
CAB ROOF TYPE			
1615-0010	Cab roof to be "flat" (non-vista).	1	
CAB BADGE PACKAGE			
1610-0000	Cab and body to have applicable E-ONE logos.	1	
GRILLE			
1620-0004	ABS chrome plated grille.	1	
CAB DOOR OPTIONS			
1550-0003	Rear crew cab doors in the medium position.	1	
1550-0005	Driver and Officer cab door windows. Include forward vent window.	1	
1550-0011	Rear crew cab door windows. Includes manual roll-down actuation. Not available with paddle style door latching.	1	
1550-0016	Door panels cab ABS	1	
1550-0025	All cab doors shall have "L" style exterior latches.	1	
1550-0027	Front cab door windows to manually roll up.	1	
1550-0037-659	(4) Incandescent cab step area lighting. Locate each light in on each cab door in the inboard position. Lights to be switched with door ajar.	1	
1550-0044	All cab door kick plates to be made from diamond plate aluminum.	1	
1550-0059-000-72	Reflective Yellow/Red striping positioned in the "A" formation located in the lower cab door panels	1	
MIRRORS			
1670-0038	Lang Mekra mirrors w/LED marker lights and turn signals, remote, heated and convex pair.	1	
MISC EXTERIOR CAB OPTIONS			
1550-0020	Windows cab side fixed driver's side	1	

Salescode	Extended Description	Qty	
MISC EXTERIOR CAB OPTIONS			
1550-0033	Windows cab side fixed officer's side	1	
1675-0022	Pair of 18" handrails located just behind driver and officer front door one each side	1	
1675-0023	Pair of 18" handrails located just behind driver and officer rear door (ALS doors if equipped) one each side.	1	
1675-0030	Mud flaps, front, black with E-ONE logo.	1	
1675-0047	Rear cab wall to be 3/16" aluminum diamond plate.	1	
HVAC			
1515-0017	Air conditioning for the Typhoon X, CII X and Quest with Cummins ISC/ISL engine, radiator mounted condensor.	1	
SEATS			
1510-0003	Seats 911 Brand.	1	
1510-0007	Seat cover material vinyl.	1	
1510-0008	Seat color gray	1	
1510-0035-147	Universal air pack bottle bracket (EA). Location: officer's seat	1	
1510-0035-148	Universal air pack bottle bracket (EA). Location: rear facing driver's side	1	
1510-0035-215	Universal air pack bottle bracket (EA). Location: rear facing officer's side	1	
1510-0038	Driver seat 911 air ride.	1	
1510-0042	Officer seat to be 911 fixed SCBA	1	
1510-0050	Rear facing 911 seat with SCBA driver's side	1	
1510-0053	Rear facing 911 seat with SCBA officer's side	1	
1685-0031	Seating capacity tag of four occupants.	1	
MISC INTERIOR CAB OPTIONS			
1685-0000	Cab interior gray. Does not include engine cover or seat color.	1	
1685-0005	Lexan sun visors, driver and officer's side overhead	1	
1685-0057	Heater Rear with Cover (PR) and front heater with heat to the feet for the driver and officer	1	
1685-0116	Interior grab handle rubber covered (2). Locate one each side at interior of front cab door opening (at rear of opening).	1	
CAB ELECTRICAL OPTIONS			
1750-0019	Battery charger Super Smart 110 volt, 20 amp.	1	
1750-0029	Switch horn button two position DOT/air horn	1	

Salescode	Extended Description	Qty	
CAB ELECTRICAL OPTIONS			
1750-0046-195	Cab Headlights. Position: lower	1	
1750-0059-179-04	Receptacle inlet 20amp with a Yellow cover. Location: outside driver's door next to handrail	1	
1750-0072-593	12 volt electrical outlet in the cab wired battery hot. Location: officer side dash.	2	
1750-0075	English dominant main cab gauge cluster.	1	
1750-0083-172	Turn signal Federal Signal QuadraFlare QL64Z-ARROW LED amber pair located upper headlight bezel	1	
1750-0188	DPF Regeneration override switch.	1	
1750-0198-A31	Battery charger to be located behind driver's seat.	1	
5400-0037	Dome Lts Red/White Incandescent. Package includes two lights mounted in the front and two mounted in the rear of the cab. White light wire through door and light assembly mounted switch. Red light through light assembly mounted switch.	1	
BODY COMPT LEFT SIDE			
3100-0095	Driver side body with full height 36" wide forward and 36" wide rearward compartmentation. Includes (1) 56" wide compartment over the wheel well.	1	
BODY COMPT RIGHT SIDE			
3120-0004	Officer half side body with 36" wide forward and 36" wide rearward compartmentation. Includes adjustable ladder tracks.	1	
BODY COMPT REAR			
3110-0005	Full Height Rear Compartment. Includes smooth plate panels.	1	
3110-0034	Upper rear compartment depth to be shallow.	1	
3340-0115	Bolt-on diamond plate 16" tailboard (full width of body). Includes (2) squared off beavertails (no stanchions) with removable outer panels and handrails- (2) vertically on trailing edge of body and horizontally mounted handrail(s) below hosebed.	1	
DOORS			
3300-0008-015	Door double vertically hinged painted. Location(s): R1	1	
3300-0008-016	Door double vertically hinged painted. Location(s): R2	1	
3300-0011-004	Door single horizontally hinged lift-up painted. Location(s): L2	1	
3300-0019-027	Door roll up tall (greater than 45") with satin finish ROM. Location(s): B1	1	
3300-0030-003	Door double 3-point vertically hinged painted. Location(s): L1	1	
3300-0030-005	Door double 3-point vertically hinged painted. Location(s): L3	1	

Salescode	Extended Description	Qty	
SHELVES			
3370-0025-099	Permanent shelf. Locate in L1 at offset (above extrusion if applicable).	1	
3370-0025-100	Permanent shelf. Locate in L3 at offset (above extrusion if applicable).	1	
COVERS			
3305-0007-000-02	Vinyl Red hosebed cover with attached rear flap(s).	1	
3305-0008-000-02	Vinyl Red crosslay cover with attached side flaps.	1	
PUMP MODULE			
3130-0004	Pump module. Includes 45" wide pump panel opening and running boards.	1	
3130-0013	Upper SM pump module with single stacked double crosslays and diamond plate storage pan.	1	
3130-0167	Pump Module to be 76" wide (side to side). Includes upper, lower, crosswalk, speedlay and tranverse module(s) if applicable.	1	
PUMP PANELS			
3134-0011	Officer side pump panel to be vertically hinged on forward extrusion. Panel(s) to be secured in the closed position with push button latches. Upper panel to be held open with gas shock.	1	
3134-0016	Stainless steel driver and officer side pump panels.	1	
3134-0064	The gauge panel(s) on the driver side of the Side Mount module to be hinged upward. Panel(s) to include (2) mechanical/pneumatic (as applicable to panel size) hold opens and latches.	1	
MISC PUMP PANEL OPTIONS			
4460-0003	Pump Panel Tags Color Coded per NFPA Compliance	1	
PUMP MODULE OPTIONS			
3136-0048	Notched crosslay divider(s) on both ends for preconnect line(s) nozzle end storage with NFPA cover(s) in closed position .	1	
3136-0058	E-One Logo. Mounted one each side on pump module/preconnect panels. Logo to be sized as applicable to available space on panel(s).	1	
WATER TANK			
4010-0016	530 Gallon "T" Water Tank. Note: Any foam cell(s) will reduce the overall water capacity. Tank capacity is 530 US gallons / 441 Imperial gallons / 2006 Liters.	1	
TANK PLUMBING			
4450-0010	2" Tank Fill Akron Manual Valve	1	
4450-0119	3" Tank To Pump Akron Manual Valve w/4" Plumbing	1	

Salescode	Extended Description	Qty	
LADDER STORAGE / RACKS			
3365-0018	Hold down brackets to secure a (2) section extension and roof ladder.	1	
3365-0025-515	Attic ladder mounting brackets (PR). Locate officer side compartment top.	1	
3365-0028	Hard Suction Storage Rack. Driver side compartment top. Includes spring hold downs and scuff plates behind spring mounts (as applicable).	1	
3365-0031	Hard Suction Storage Rack. Officer side in adjustable track above ladders. Includes spring hold downs and scuff plates.	1	
3365-0034-515	(2) pike pole storage tubes. Locate officer side compartment top.	1	
3365-0049	Brand of ladders capable of being carried on unit to be Alco-Lite.	1	
3365-0086-B99	The length of pike pole(s) capable of being stored to be the following length: (2) 10' pike poles.	1	
3365-0087-C57	The length of ladder(s) capable of being stored to be the following length: 24' 2-Section and 14' roof ladder.	1	
3365-0168	Pike pole tube secondary retaining pin(s) with cable. Locate on end of pike pole tube(s).	1	
HANDRAILS / STEPS			
3330-0007-060	Folding Step. Location officer side front compartment face. Each location requires a minimum of (1) handrail per NFPA.	1	
3330-0007-062	Folding Step. Location driver side front compartment face. Each location requires a minimum of (1) handrail per NFPA.	3	
3330-0024	Steps rear NFPA. Includes folding steps on driver side (staggered stepped as applicable with tailboard depth) for NFPA hosebed access and handrail mounted on driver side upper hosebed side (as applicable).	1	
MISC BODY OPTIONS			
3090-0002	The unit has no overall height restrictions.	1	
3090-0004	The unit has no overall length restrictions.	1	
3090-0007	The hosebed is to have a NFPA capacity.	1	
3340-0004	Hosebed above the booster tank. Includes forward hosebed and tower(s) cover plate work. Hosebed adjustable divider extrusion rearward of the furthest tower is to run full width of the hosebed.	1	
3340-0015	Diamond plate single axle wheel well. Includes bolt-on composite wheel well liners and aluminum fenderettes.	1	
3340-0035	Divider Long. To run full length of hosebed (front to rear).	1	
3340-0049	Hosebed Storage Pan. Locate in forward area of hosebed.	1	
3340-0058	Recessed fuel fill driver side wheel well.	1	

Salescode	Extended Description	Qty	
MISC BODY OPTIONS			
3340-0074	Body mainframe and hosebed side assemblies for a 85" high body.	1	
3340-0079	Locate Tank Fill Tower(s) in the hosebed storage pan.	1	
3340-0093	Mud flaps, rear, black with E-ONE logo.	1	
3340-0110	The rear of each hosebed divider to have a hand hold cutout.	1	
3340-0128	Bolt-in partition walls. Locate in lower rear compartment transverse area. Partitions to seperate the side rear compartments from the rear compartment.	1	
3340-0145	Rubrail for the body and pump area module(s).	1	
SCBA BOTTLE STORAGE			
3320-0020	SCBA Bottle Storage. (4) Fire Shopp SCBA bottle storage with hinged doors with push button latches. (2) officer side and (2) driver side in wheel well area.	1	
PUMPS			
4005-0016	Hale QMAX 1500-2250 GPM single stage Pump	1	
4005-0031	Rating 1500 GPM	1	
PUMP CERTIFICATION			
4475-0000	Pump certification 750-2250 GPM	1	
PUMP OPTIONS			
4015-0007	Pump Cooler	1	
4015-0008	Zinc Anodes for Hale Pump - (Pair) (1) Discharge side and (1) Intake Side	1	
4015-0022	Pump Seal Mechanical - Hale	1	
4015-0052-198	Steamers to be Flush Location: driver's side.	1	
4015-0052-199	Steamers to be Flush Location: officer's side.	1	
4015-0098	Manual operated master pump drain. The master drain shall be clearly marked and placed in accessible location on pump panel.	1	
INTAKES			
4440-0005	2.5" Left Intake Akron Manual Valve	1	
INTAKE OPTIONS			
4445-0016	Valve Relief Intake - Hale 2.5"	1	
DISCHARGES AND PRECONNECTS			
4415-0012-654	1.5" Crosslay with Akron Manual Valve. Location: crosslay 1 & 2	2	
4415-0022-350	2.5" Left Rear Discharge Akron Manual Valve Location: left rear discharge	1	

Salescode	Extended Description	Qty	
DISCHARGES AND PRECONNECTS			
4415-0034-583	3" Right Pump Panel Discharge Akron Manual Valve Location: right side discharge 1	1	
4415-0041	3" Deck Gun Discharge Akron Manual Valve	1	
4415-0161-581	2.5" Left Panel Discharge Akron Manual Valve w/30 Degree Droop Location: left side discharge 1	1	
4415-0161-582	2.5" Left Panel Discharge Akron Manual Valve w/30 Degree Droop Location: left side discharge 2	1	
4415-0164-584	2.5" Right Panel Discharge Akron Manual Valve w/30 Degree Droop Location: right side discharge 2	1	
DISCHARGE OPTIONS			
4417-0058-350	Bleeder Drain Valve Plumbed to: left rear discharge	1	
4417-0058-356	Bleeder Drain Valve Plumbed to: deck gun	1	
4417-0058-573	Bleeder Drain Valve Plumbed to: crosslay preconnect	2	
4417-0058-575	Bleeder Drain Valve Plumbed to: left discharge	2	
4417-0058-576	Bleeder Drain Valve Plumbed to: right discharge	2	
4417-0070	Push/Pull "T" Handle Controls	1	
PRESSURE GOVERNORS			
4465-0005	Class1 Captain pressure governor.	1	
GAUGES			
4435-0001	Class 1 Intelli-Tank Water Tank Level Gauge	1	
4435-0013	Class 1 Pressure 4.5" Gauge (30-0-600 PSI)	2	
4435-0015-350	2.5" Class 1 Pressure Gauge (30-0-600). Discharge: left rear discharge	1	
4435-0015-352	2.5" Class 1 Pressure Gauge (30-0-600). Discharge: 1.5 in. crosslay preconnect	2	
4435-0015-356	2.5" Class 1 Pressure Gauge (30-0-600). Discharge: deck gun	1	
4435-0015-581	2.5" Class 1 Pressure Gauge (30-0-600). Discharge: left side discharge 1	1	
4435-0015-582	2.5" Class 1 Pressure Gauge (30-0-600). Discharge: left side discharge 2	1	
4435-0015-583	2.5" Class 1 Pressure Gauge (30-0-600). Discharge: right side discharge 1	1	
4435-0015-584	2.5" Class 1 Pressure Gauge (30-0-600). Discharge: right side discharge 2	1	
4435-0069	Enfo IV System on Pump Operator's Panel	1	
ELECTRICAL SYSTEMS			
5010-0002	Multiplex electrical system for pumper / tanker / rescue.	1	

Salescode	Extended Description	Qty	
ELECTRICAL SYSTEMS			
5010-0003	Multiplex modem kit. Includes cable, modem, and adapter harness.	1	
5010-0004	Multiplex Data Logger	1	
5010-0013-E91	Vehicle data recorder - 2009 NFPA compliant. Includes occupant detection with display. Display location: Driver side of center dash electrical cover.	1	
LIGHT BARS			
5300-0021	Light bar Federal Signal JetStream 60" LED. Red Solaris reflectors with clear domes. NFPA Compliant, does not require 2 addl side facing bars. Location: Centered on the front cab roof	1	
WARNING LIGHT PACKAGES			
5550-0057-535	Federal Signal QuadraFlare LED lower level warning light package. Includes (8) QL64XF-R LED light heads with bezels and (2) Model 3300-04 LED light heads. Locate side facing lights: at forward most position, centered in rear wheelwell, and side facing at rear of body in rubrail if equipped.	1	
5550-0067	Flash rate for Federal QuadraFlare LED lower level warning lights to be set at pattern 4, alternating quad flash (75 QFPM).	1	
WARNING LIGHTS			
5600-0034-479-09	Federal Model SY12FS Sentry (PR) with driver amber, officer red domes. Location: rear upper body on aerial style brackets.	1	
5600-0149-170	Hazard (door ajar) light 2.5" incandescent. Location: center overhead	1	
SIRENS			
5500-0009	Federal PA300 siren recessed mounted.	1	
5500-0024-170	The electronic siren control is to be located on the center overhead.	1	
SPEAKERS			
5510-0029-209	Speaker Federal Dynamax ES100-EF thru bumper. Location: driver side front bumper.	1	
DOT LIGHTING			
5150-0017	License plate light LED with chrome housing located at the rear of the body.	1	
5150-0025	Marker light LED body/cab package. E-One custom cab and pumper or tanker body only.	1	
5150-0059	Federal Signal QuadraFlare LED vertical mount taillights. Includes LED stop/tail, arrow turn and backup lights with vertical Cast 3 housing and weatherproof connectors.	1	

Salescode	Extended Description	Qty	
LIGHTS - COMPARTMENT, STEP & GROUND			
5380-0008	Compartment light package incandescent for small bodies.	1	
5380-0027	Ground light package for cab and body - small.	1	
5380-0035	Step light package body - large.	1	
LIGHTS - DECK AND SCENE			
5390-0000-395	Deck Light - Unity 12V (PR) Location: rear body/beavertail area on the trailing edge up high	1	
5390-0003	Hosebed light Trucklite. Locate center front of hosebed. Switched with work light switch in cab.	1	
5390-0022	Crosslay light Trucklite. Locate to rear of crosslay (SM) and forward of crosslay (TM as applicable). Switched with work light switch in cab.	1	
LIGHTS - NON-WARNING			
5400-0003	Engine Compartment Light (EA).	1	
5400-0008	(1) pump panel light over the pump control area to be wired to come on when pump shift is placed to pump.	1	
5400-0010	Incandescent pump compartment light (EA).	1	
5400-0039	Spotlight Specialty 2150 hand held located on officer's side of cab dash - hardwired.	1	
5400-0047	Pump panel light package with (3) lights per side pump panel. Pump panels over 45" may require additional lights. Side mount only.	1	
CONTROLS / SWITCHES			
5100-0000-199	Foot Switch to control air horns located officer's side	1	
5100-0007-198	Foot Switch to control electronic siren located driver's side	1	
MISC ELECTRICAL			
1750-0082-762	12V power distribution module. Includes (6) battery hot and (6) switched hot circuits. 100 amps max (IATS). Location: behind officer's seat	1	
5110-0017	Back up alarm 97 dB(A).	1	
HAND TOOLS			
7600-0005	Pike Pole Fiberglass 6'	1	
7600-0007	Pike Pole Fiberglass 10'	1	
GROUND LADDERS			
7800-0007	Alco-Lite PRL-14 Roof Ladder	1	
7800-0016	Alco-Lite PEL-24 Extension Ladder	1	

Salescode	Extended Description	Qty	
GROUND LADDERS			
7800-0032	Alco-Lite 10' Folding Ladder w/Shoes - FL10 Alco-Lite 10FT folding aluminum ladder with safety shoes.	1	
MISC LOOSE EQUIPMENT			
7900-0014	DOT Required Drive Away Kit - Kit includes three (3) triangular warning reflectors with carrying case. This kit is for the end user and is to remain with the truck.	1	
EXTERIOR PAINT			
8100-0089	All applicable pump/pre-connect application modules are to have a sanded finish (not painted job color). Includes upper and lower pump modules, crosswalk module and/or speedlay/pre-connect module (as applicable). Rear mounted body/pump module to be painted job color.	1	
8100-0116	Rear body surface to have a sanded finish (not painted job color). Includes hinged doors that do not have discrete sales codes and removable panels.	1	
8100-0176-000-17	Paint E-One chassis cab - Sikkens paint. Color: FLNA3225 Red.	1	
8100-0182-000-17	Paint Body - Small - For Pumpers, Rear Mounts, S/A Tankers and Rescues. Sikkens paint. Color: FLNA3225 Red.	1	
INTERIOR PAINT			
8150-0010	The interior of the cab to be paint OTO gray	1	
STRIPING			
8300-0002-333-12	NFPA Scotchlite Stripe - 4" wide and straight on front/sides of cab and sides/rear of body. Color: White. Location: top of stripe flush with top of bumper and straight back.	1	
8300-0042	White rubrail scotchlite insert.	1	
8300-0084-000-72	Chevron "A" style 6" printed sheet Scotchlite striping on rear of body. Includes rear facing extrusions, panels and doors inboard/outboard of the beavertails(if applicable). Colors to be Yellow/Red.	1	
WARRANTY / STANDARD & EXTENDED			
9100-0000	Standard 1 Year Warranty	1	
9100-0003	Lifetime Frame Warranty	1	
9100-0004	10 Year/100,000 Mile Structural Warranty - Statement of Warranty	1	
9100-0005	10 Year Stainless Steel Plumbing Warranty - Statement of Warranty	1	
9100-0019	10 Year Limited Paint and Perforation Warranty - For Sikkens Paint	1	
SUPPORT, DELIVERY, INSPECTIONS AND MANUALS			

Salescode	Extended Description	Qty	
SUPPORT, DELIVERY, INSPECTIONS AND MANUALS			
9300-0009	Manuals, Operator and Service CD-ROM.	1	
9300-0016	Approval Drawings-Standard	1	
PRICE			$313,920.

STATE OF OHIO TERM SCHEDULE

4200 SURFACE RD
COLUMBUS, OH 43228

Quote No: 35825

3/6/2010

Quote Rev:19 Drawing Rev:4

Note: Hosebed height may not be the correct measurement for this combo. Compartment height may change.

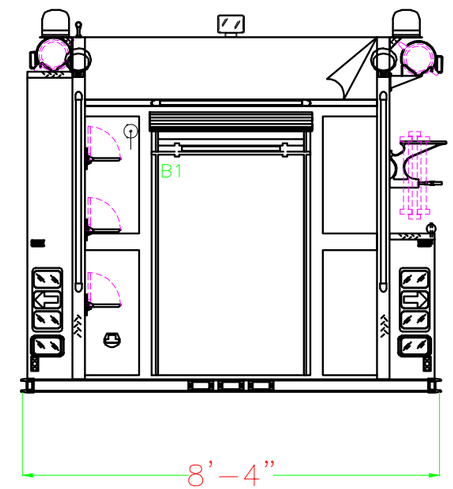

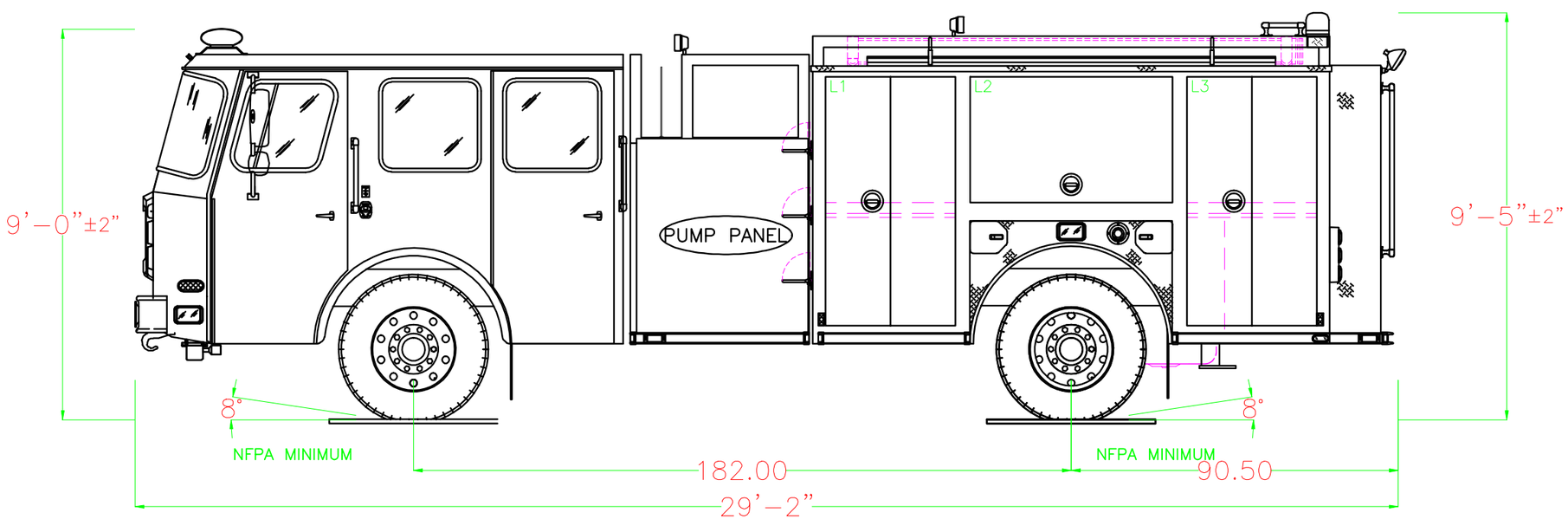

POWERED BY EZDRAW

Notice: This drawing provides a GENERAL REPRESENTATION of the vehicle configuration and should be used for evaluation purposes. The respective dimensions shown,including overall height and length, are estimates and may vary due to manufacturing processes. All other items such as lighting and fixtures, plumbing, compartmentation, and other generally assembled details are shown for REFERENCE ONLY and may not be a direct reflection of the final truck configuration. In ALL situations where this drawing may conflict with the specifications, THE SPECIFICATIONS, AS REFLECTED IN THE APPROVED SHOP ORDER, SHALL PREVAIL. Unless otherwise specified, the proposed apparatus will be manufactured to the latest NFPA recommendations as well as other applicable federally regulated safety regulations. E-One reserves the right to engineer and incorporate design improvements and changes without notice, while adhering to the intent of the specification.

1500 GPM HALE QMAXPUMP
530 TOTAL VOLUME
0 TOTAL FOAM

HOSE LOADS :

	OPENING		INTERIOR DIMENSIONS				
COMPT.	WIDTH	HEIGHT	WIDTH	LOWER HEIGHT	LOWER DEPTH	UPPER HEIGHT	UPPER DEPTH
L1	36	68.75	36	30	26	38.75	12
L2	56	34.75	56	N/A	N/A	34.75	12
L3	36	68.75	36	30	26	38.75	12
R1	36	30	36	30	26	N/A	N/A
R2	36	30	36	30	26	N/A	N/A
B1	36	45	38	30	26	24	14

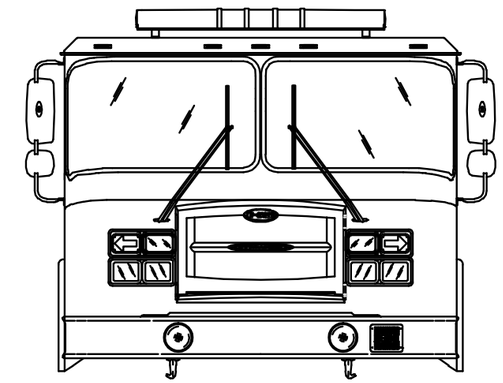

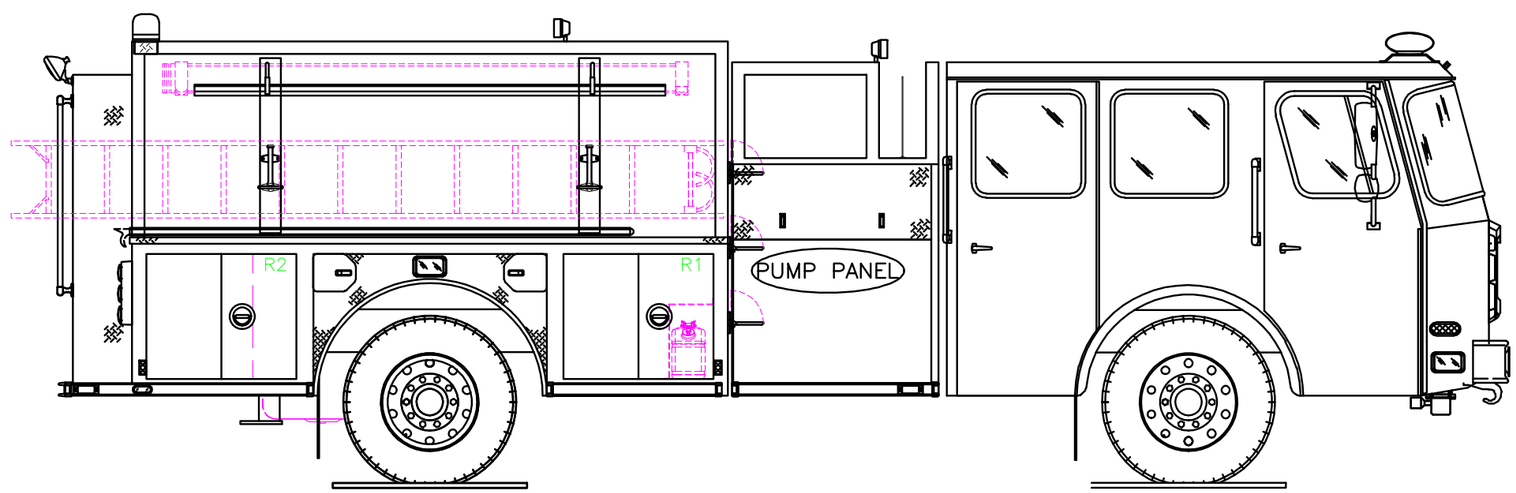

POWERED BY EZDRAW

Fire Apparatus Quotation for:
STATE OF OHIO TERM SCHEDULE

Quotation Number: 35840 Rev: 11

Unit Description: PMPR-CYC2

Quote Description: Mainline Pumper Custom - Cyclone II Chassis Salesperson:

Salescode	Extended Description	Qty	
TESTING COMPLIANCE STANDARD			
1001-0015	The E-ONE supplied components of the vehicle shall meet the requirements of NFPA 1901, 2009 edition.	1	
BUMPERS			
1160-0000	Bumper 10" stainless steel	1	
1160-0011	4" Front Bumper Extension.	1	
FRAME ASSEMBLY			
1250-0003	Frame 10.25 x 3.5 x .375 chassis.	1	
AXLE OPTIONS			
1025-0009	Meritor FL943 front axle 18,000lb	1	
1025-0016	Meritor RS-24-160 single rear axle 24,000lb capacity	1	
1025-0029	Front Shock absorbers	1	
SUSPENSIONS			
1070-0001	Rear suspension springs rated equal to the capacity of the axle	1	
WHEEL OPTIONS			
1050-0044	Accuride aluminum wheels for front axle (2).	1	
1050-0045	Accuride aluminum wheels for rear axle (4).	1	
TIRE OPTIONS			
1060-0001	Two Michelin 315 tires model XZA-1 for front axle	1	
1060-0015	Four Michelin 11R rear tires with Mud and Snow tread	1	
1060-0050	Tire pressure monitoring valve stem caps.	1	

Salescode	Extended Description	Qty	
BRAKE SYSTEMS			
1100-0000	16-1/2" x 6" S-cam brakes with ArvinMeritor automatic slack adjusters for front axle	1	
1100-0002	ArvinMeritor 16-1/2" x 7" S-cam brakes with cast brake drums for a single rear axle	1	
1100-0005	Brake system air 4X2/4X4	1	
1100-0006	Parking brake release mounted on the driver's side lower dash	1	
AIR SYSTEM OPTIONS			
1110-0000-001	Inlet for air system. Location: driver door jamb	1	
1110-0002	Air dryer Bendix AD-9	1	
1110-0006	Air lines nylon	1	
1110-0026	Air horns recessed in bumper (PR)	1	
ENGINES & TRANSMISSIONS			
1200-0017	Push button transmission selector	1	
1200-0021	Trans Synd synthetic transmission fluid for EVS 4000.	1	
1200-0059	Eng/Trans Cummins ISM 450HP/EVS4000 2007 EPA Compliant Engine	1	
1200-0097	Electronically limited speed to 68 MPH maximum. Note: Max speed may be set at 65 MPH due to tire rating.	1	
SECONDARY BRAKING			
1125-0002	Brake Jacob's engine compression	1	
COOLING PACKAGE			
1800-0005	Cooling system for use with Cyclone II X, Typhoon X, and Quest chassis. Includes coolant recovery system.	1	
FUEL SYSTEMS			
1350-0003	Fuel system 50 gallon	1	
1350-0013	Fuel water Racor separator to be a bottom drop out style. Shall include indicator light and audible alarm.	1	
1350-0022	Fuel line hose rubber.	1	
ALTERNATOR			
1700-0003	Alternator Leece Neville. (270 amp SAE/240 NFPA rating).	1	
BATTERIES			
1400-0002	Battery four group 31 1000CCA	1	

Salescode	Extended Description	Qty	
CHASSIS OPTIONS			
1680-0005	Thermatic Fan Clutch	1	
1680-0007	Drivelines 1810. Required on 1550 lb/ft torque engines	1	
1680-0011	Tow eyes rear below body painted	1	
1680-0042	Tow hooks front painted in the down position.	1	
CAB MODEL			
1520-0008	Cyclone II X medium cab with 58" CA	1	
CAB ROOF TYPE			
1615-0010	Cab roof to be "flat" (non-vista).	1	
CAB BADGE PACKAGE			
1610-0000	Cab and body to have applicable E-ONE logos.	1	
CAB DOOR OPTIONS			
1550-0003	Rear crew cab doors in the medium position.	1	
1550-0005	Driver and Officer cab door windows. Include forward vent window.	1	
1550-0011	Rear crew cab door windows. Includes manual roll-down actuation. Not available with paddle style door latching.	1	
1550-0016	Door panels cab ABS	1	
1550-0025	All cab doors shall have "L" style exterior latches.	1	
1550-0027	Front cab door windows to manually roll up.	1	
1550-0037-659	(4) Incandescent cab step area lighting. Locate each light in on each cab door in the inboard position. Lights to be switched with door ajar.	1	
1550-0044	All cab door kick plates to be made from diamond plate aluminum.	1	
1550-0059-000-72	Reflective Yellow/Red striping positioned in the "A" formation located in the lower cab door panels	1	
MIRRORS			
1670-0038	Lang Mekra mirrors w/LED marker lights and turn signals, remote, heated and convex pair.	1	
MISC EXTERIOR CAB OPTIONS			
1550-0020	Windows cab side fixed driver's side	1	
1550-0033	Windows cab side fixed officer's side	1	
1675-0022	Pair of 18" handrails located just behind driver and officer front door one each side	1	

Salescode	Extended Description	Qty	
MISC EXTERIOR CAB OPTIONS			
1675-0023	Pair of 18" handrails located just behind driver and officer rear door (ALS doors if equipped) one each side.	1	
1675-0030	Mud flaps, front, black with E-ONE logo.	1	
1675-0047	Rear cab wall to be 3/16" aluminum diamond plate.	1	
HVAC			
1515-0018	Air conditioning for the CII X and Quest with Cummins ISM or Detroit Diesel Series 60 engine, roof top mounted condensor.	1	
SEATS			
1510-0003	Seats 911 Brand.	1	
1510-0007	Seat cover material vinyl.	1	
1510-0008	Seat color gray	1	
1510-0035-147	Universal air pack bottle bracket (EA). Location: officer's seat	1	
1510-0035-148	Universal air pack bottle bracket (EA). Location: rear facing driver's side	1	
1510-0035-215	Universal air pack bottle bracket (EA). Location: rear facing officer's side	1	
1510-0038	Driver seat 911 air ride.	1	
1510-0042	Officer seat to be 911 fixed SCBA	1	
1510-0050	Rear facing 911 seat with SCBA driver's side	1	
1510-0053	Rear facing 911 seat with SCBA officer's side	1	
1685-0031	Seating capacity tag of four occupants.	1	
MISC INTERIOR CAB OPTIONS			
1685-0000	Cab interior gray. Does not include engine cover or seat color.	1	
1685-0005	Lexan sun visors, driver and officer's side overhead	1	
1685-0057	Heater Rear with Cover (PR) and front heater with heat to the feet for the driver and officer	1	
1685-0116	Interior grab handle rubber covered (2). Locate one each side at interior of front cab door opening (at rear of opening).	1	
CAB ELECTRICAL OPTIONS			
1750-0019	Battery charger Super Smart 110 volt, 20 amp.	1	
1750-0029	Switch horn button two position DOT/air horn	1	
1750-0046-195	Cab Headlights. Position: lower	1	
1750-0059-179-04	Receptacle inlet 20amp with a Yellow cover. Location: outside driver's door next to	1	

Salescode	Extended Description	Qty	
CAB ELECTRICAL OPTIONS			
	handrail		
1750-0072-593	12 volt electrical outlet in the cab wired battery hot. Location: officer side dash.	2	
1750-0075	English dominant main cab gauge cluster.	1	
1750-0083-172	Turn signal Federal Signal QuadraFlare QL64Z-ARROW LED amber pair located upper headlight bezel	1	
1750-0198-A31	Battery charger to be located behind driver's seat.	1	
5400-0037	Dome Lts Red/White Incandescent. Package includes two lights mounted in the front and two mounted in the rear of the cab. White light wire through door and light assembly mounted switch. Red light through light assembly mounted switch.	1	
BODY COMPT LEFT SIDE			
3100-0095	Driver side body with full height 36" wide forward and 36" wide rearward compartmentation. Includes (1) 56" wide compartment over the wheel well.	1	
BODY COMPT RIGHT SIDE			
3120-0004	Officer half side body with 36" wide forward and 36" wide rearward compartmentation. Includes adjustable ladder tracks.	1	
BODY COMPT REAR			
3110-0005	Full Height Rear Compartment. Includes smooth plate panels.	1	
3110-0034	Upper rear compartment depth to be shallow.	1	
3340-0115	Bolt-on diamond plate 16" tailboard (full width of body). Includes (2) squared off beavertails (no stanchions) with removable outer panels and handrails- (2) vertically on trailing edge of body and horizontally mounted handrail(s) below hosebed.	1	
DOORS			
3300-0008-015	Door double vertically hinged painted. Location(s): R1	1	
3300-0008-016	Door double vertically hinged painted. Location(s): R2	1	
3300-0011-004	Door single horizontally hinged lift-up painted. Location(s): L2	1	
3300-0019-027	Door roll up tall (greater than 45") with satin finish ROM. Location(s): B1	1	
3300-0030-003	Door double 3-point vertically hinged painted. Location(s): L1	1	
3300-0030-005	Door double 3-point vertically hinged painted. Location(s): L3	1	
SHELVES			
3370-0025-099	Permanent shelf. Locate in L1 at offset (above extrusion if applicable).	1	
3370-0025-100	Permanent shelf. Locate in L3 at offset (above extrusion if applicable).	1	

Salescode	Extended Description	Qty	
COVERS			
3305-0007-000-02	Vinyl Red hosebed cover with attached rear flap(s).	1	
3305-0008-000-02	Vinyl Red crosslay cover with attached side flaps.	1	
PUMP MODULE			
3130-0004	Pump module. Includes 45" wide pump panel opening and running boards.	1	
3130-0013	Upper SM pump module with single stacked double crosslays and diamond plate storage pan.	1	
3130-0167	Pump Module to be 76" wide (side to side). Includes upper, lower, crosswalk, speedlay and tranverse module(s) if applicable.	1	
PUMP PANELS			
3134-0011	Officer side pump panel to be vertically hinged on forward extrusion. Panel(s) to be secured in the closed position with push button latches. Upper panel to be held open with gas shock.	1	
3134-0016	Stainless steel driver and officer side pump panels.	1	
3134-0064	The gauge panel(s) on the driver side of the Side Mount module to be hinged upward. Panel(s) to include (2) mechanical/pneumatic (as applicable to panel size) hold opens and latches.	1	
MISC PUMP PANEL OPTIONS			
4460-0003	Pump Panel Tags Color Coded per NFPA Compliance	1	
PUMP MODULE OPTIONS			
3136-0048	Notched crosslay divider(s) on both ends for preconnect line(s) nozzle end storage with NFPA cover(s) in closed position .	1	
3136-0058	E-One Logo. Mounted one each side on pump module/preconnect panels. Logo to be sized as applicable to available space on panel(s).	1	
WATER TANK			
4010-0016	530 Gallon "T" Water Tank. Note: Any foam cell(s) will reduce the overall water capacity. Tank capacity is 530 US gallons / 441 Imperial gallons / 2006 Liters.	1	
TANK PLUMBING			
4450-0010	2" Tank Fill Akron Manual Valve	1	
4450-0119	3" Tank To Pump Akron Manual Valve w/4" Plumbing	1	
LADDER STORAGE / RACKS			
3365-0018	Hold down brackets to secure a (2) section extension and roof ladder.	1	
3365-0025-515	Attic ladder mounting brackets (PR). Locate officer side compartment top.	1	

Salescode	Extended Description	Qty	
LADDER STORAGE / RACKS			
3365-0028	Hard Suction Storage Rack. Driver side compartment top. Includes spring hold downs and scuff plates behind spring mounts (as applicable).	1	
3365-0031	Hard Suction Storage Rack. Officer side in adjustable track above ladders. Includes spring hold downs and scuff plates.	1	
3365-0034-515	(2) pike pole storage tubes. Locate officer side compartment top.	1	
3365-0049	Brand of ladders capable of being carried on unit to be Alco-Lite.	1	
3365-0086-B99	The length of pike pole(s) capable of being stored to be the following length: (2) 10' pike poles.	1	
3365-0087-C57	The length of ladder(s) capable of being stored to be the following length: 24' 2-Section and 14' roof ladder.	1	
3365-0168	Pike pole tube secondary retaining pin(s) with cable. Locate on end of pike pole tube(s).	1	
HANDRAILS / STEPS			
3330-0007-060	Folding Step. Location officer side front compartment face. Each location requires a minimum of (1) handrail per NFPA.	1	
3330-0007-062	Folding Step. Location driver side front compartment face. Each location requires a minimum of (1) handrail per NFPA.	3	
3330-0024	Steps rear NFPA. Includes folding steps on driver side (staggered stepped as applicable with tailboard depth) for NFPA hosebed access and handrail mounted on driver side upper hosebed side (as applicable).	1	
MISC BODY OPTIONS			
3090-0002	The unit has no overall height restrictions.	1	
3090-0004	The unit has no overall length restrictions.	1	
3090-0007	The hosebed is to have a NFPA capacity.	1	
3340-0004	Hosebed above the booster tank. Includes forward hosebed and tower(s) cover plate work. Hosebed adjustable divider extrusion rearward of the furthest tower is to run full width of the hosebed.	1	
3340-0015	Diamond plate single axle wheel well. Includes bolt-on composite wheel well liners and aluminum fenderettes.	1	
3340-0035	Divider Long. To run full length of hosebed (front to rear).	1	
3340-0049	Hosebed Storage Pan. Locate in forward area of hosebed.	1	
3340-0058	Recessed fuel fill driver side wheel well.	1	
3340-0074	Body mainframe and hosebed side assemblies for a 85" high body.	1	
3340-0079	Locate Tank Fill Tower(s) in the hosebed storage pan.	1	

Salescode	Extended Description	Qty	
MISC BODY OPTIONS			
3340-0093	Mud flaps, rear, black with E-ONE logo.	1	
3340-0110	The rear of each hosebed divider to have a hand hold cutout.	1	
3340-0128	Bolt-in partition walls. Locate in lower rear compartment transverse area. Partitions to seperate the side rear compartments from the rear compartment.	1	
3340-0145	Rubrail for the body and pump area module(s).	1	
SCBA BOTTLE STORAGE			
3320-0020	SCBA Bottle Storage. (4) Fire Shopp SCBA bottle storage with hinged doors with push button latches. (2) officer side and (2) driver side in wheel well area.	1	
PUMPS			
4005-0016	Hale QMAX 1500-2250 GPM single stage Pump	1	
4005-0031	Rating 1500 GPM	1	
PUMP CERTIFICATION			
4475-0000	Pump certification 750-2250 GPM	1	
PUMP OPTIONS			
4015-0007	Pump Cooler	1	
4015-0008	Zinc Anodes for Hale Pump - (Pair) (1) Discharge side and (1) Intake Side	1	
4015-0022	Pump Seal Mechanical - Hale	1	
4015-0052-198	Steamers to be Flush Location: driver's side.	1	
4015-0052-199	Steamers to be Flush Location: officer's side.	1	
4015-0098	Manual operated master pump drain. The master drain shall be clearly marked and placed in accessible location on pump panel.	1	
INTAKES			
4440-0005	2.5" Left Intake Akron Manual Valve	1	
INTAKE OPTIONS			
4445-0016	Valve Relief Intake - Hale 2.5"	1	
DISCHARGES AND PRECONNECTS			
4415-0012-654	1.5" Crosslay with Akron Manual Valve. Location: crosslay 1 & 2	2	
4415-0022-350	2.5" Left Rear Discharge Akron Manual Valve Location: left rear discharge	1	
4415-0034-583	3" Right Pump Panel Discharge Akron Manual Valve Location: right side discharge 1	1	

Salescode	Extended Description	Qty	
DISCHARGES AND PRECONNECTS			
4415-0041	3" Deck Gun Discharge Akron Manual Valve	1	
4415-0161-581	2.5" Left Panel Discharge Akron Manual Valve w/30 Degree Droop Location: left side discharge 1	1	
4415-0161-582	2.5" Left Panel Discharge Akron Manual Valve w/30 Degree Droop Location: left side discharge 2	1	
4415-0164-584	2.5" Right Panel Discharge Akron Manual Valve w/30 Degree Droop Location: right side discharge 2	1	
DISCHARGE OPTIONS			
4417-0058-350	Bleeder Drain Valve Plumbed to: left rear discharge	1	
4417-0058-356	Bleeder Drain Valve Plumbed to: deck gun	1	
4417-0058-573	Bleeder Drain Valve Plumbed to: crosslay preconnect	2	
4417-0058-575	Bleeder Drain Valve Plumbed to: left discharge	2	
4417-0058-576	Bleeder Drain Valve Plumbed to: right discharge	2	
4417-0070	Push/Pull "T" Handle Controls	1	
PRESSURE GOVERNORS			
4465-0005	Class1 Captain pressure governor.	1	
GAUGES			
4435-0001	Class 1 Intelli-Tank Water Tank Level Gauge	1	
4435-0013	Class 1 Pressure 4.5" Gauge (30-0-600 PSI)	2	
4435-0015-350	2.5" Class 1 Pressure Gauge (30-0-600). Discharge: left rear discharge	1	
4435-0015-352	2.5" Class 1 Pressure Gauge (30-0-600). Discharge: 1.5 in. crosslay preconnect	2	
4435-0015-356	2.5" Class 1 Pressure Gauge (30-0-600). Discharge: deck gun	1	
4435-0015-581	2.5" Class 1 Pressure Gauge (30-0-600). Discharge: left side discharge 1	1	
4435-0015-582	2.5" Class 1 Pressure Gauge (30-0-600). Discharge: left side discharge 2	1	
4435-0015-583	2.5" Class 1 Pressure Gauge (30-0-600). Discharge: right side discharge 1	1	
4435-0015-584	2.5" Class 1 Pressure Gauge (30-0-600). Discharge: right side discharge 2	1	
4435-0069	Enfo IV System on Pump Operator's Panel	1	
ELECTRICAL SYSTEMS			
5010-0002	Multiplex electrical system for pumper / tanker / rescue.	1	
5010-0003	Multiplex modem kit. Includes cable, modem, and adapter harness.	1	
5010-0004	Multiplex Data Logger	1	

Salescode	Extended Description	Qty	
ELECTRICAL SYSTEMS			
5010-0013-E91	Vehicle data recorder - 2009 NFPA compliant. Includes occupant detection with display. Display location: Driver side of center dash electrical cover.	1	
LIGHT BARS			
5300-0021	Light bar Federal Signal JetStream 60" LED. Red Solaris reflectors with clear domes. NFPA Compliant, does not require 2 addl side facing bars. Location: Centered on the front cab roof	1	
WARNING LIGHT PACKAGES			
5550-0057-535	Federal Signal QuadraFlare LED lower level warning light package. Includes (8) QL64XF-R LED light heads with bezels and (2) Model 3300-04 LED light heads. Locate side facing lights: at forward most position, centered in rear wheelwell, and side facing at rear of body in rubrail if equipped.	1	
5550-0067	Flash rate for Federal QuadraFlare LED lower level warning lights to be set at pattern 4, alternating quad flash (75 QFPM).	1	
WARNING LIGHTS			
5600-0034-479-09	Federal Model SY12FS Sentry (PR) with driver amber, officer red domes. Location: rear upper body on aerial style brackets.	1	
5600-0149-170	Hazard (door ajar) light 2.5" incandescent. Location: center overhead	1	
SIRENS			
5500-0009	Federal PA300 siren recessed mounted.	1	
5500-0024-170	The electronic siren control is to be located on the center overhead.	1	
SPEAKERS			
5510-0029-209	Speaker Federal Dynamax ES100-EF thru bumper. Location: driver side front bumper.	1	
DOT LIGHTING			
5150-0017	License plate light LED with chrome housing located at the rear of the body.	1	
5150-0025	Marker light LED body/cab package. E-One custom cab and pumper or tanker body only.	1	
5150-0059	Federal Signal QuadraFlare LED vertical mount taillights. Includes LED stop/tail, arrow turn and backup lights with vertical Cast 3 housing and weatherproof connectors.	1	
LIGHTS - COMPARTMENT, STEP & GROUND			
5380-0008	Compartment light package incandescent for small bodies.	1	

Salescode	Extended Description	Qty	
LIGHTS - COMPARTMENT, STEP & GROUND			
5380-0027	Ground light package for cab and body - small.	1	
5380-0035	Step light package body - large.	1	
LIGHTS - DECK AND SCENE			
5390-0000-395	Deck Light - Unity 12V (PR) Location: rear body/beavertail area on the trailing edge up high	1	
5390-0003	Hosebed light Trucklite. Locate center front of hosebed. Switched with work light switch in cab.	1	
5390-0022	Crosslay light Trucklite. Locate to rear of crosslay (SM) and forward of crosslay (TM as applicable). Switched with work light switch in cab.	1	
LIGHTS - NON-WARNING			
5400-0003	Engine Compartment Light (EA).	1	
5400-0008	(1) pump panel light over the pump control area to be wired to come on when pump shift is placed to pump.	1	
5400-0010	Incandescent pump compartment light (EA).	1	
5400-0039	Spotlight Specialty 2150 hand held located on officer's side of cab dash - hardwired.	1	
5400-0047	Pump panel light package with (3) lights per side pump panel. Pump panels over 45" may require additional lights. Side mount only.	1	
CONTROLS / SWITCHES			
5100-0000-199	Foot Switch to control air horns located officer's side	1	
5100-0007-198	Foot Switch to control electronic siren located driver's side	1	
MISC ELECTRICAL			
1750-0082-762	12V power distribution module. Includes (6) battery hot and (6) switched hot circuits. 100 amps max (IATS). Location: behind officer's seat	1	
5110-0017	Back up alarm 97 dB(A).	1	
HAND TOOLS			
7600-0005	Pike Pole Fiberglass 6'	1	
7600-0007	Pike Pole Fiberglass 10'	1	
GROUND LADDERS			
7800-0007	Alco-Lite PRL-14 Roof Ladder	1	
7800-0016	Alco-Lite PEL-24 Extension Ladder	1	
7800-0032	Alco-Lite 10' Folding Ladder w/Shoes - FL10 Alco-Lite 10FT folding aluminum ladder	1	

Salescode	Extended Description	Qty	
GROUND LADDERS			
	with safety shoes.		
MISC LOOSE EQUIPMENT			
7900-0014	DOT Required Drive Away Kit - Kit includes three (3) triangular warning reflectors with carrying case. This kit is for the end user and is to remain with the truck.	1	
EXTERIOR PAINT			
8100-0089	All applicable pump/pre-connect application modules are to have a sanded finish (not painted job color). Includes upper and lower pump modules, crosswalk module and/or speedlay/pre-connect module (as applicable). Rear mounted body/pump module to be painted job color.	1	
8100-0116	Rear body surface to have a sanded finish (not painted job color). Includes hinged doors that do not have discrete sales codes and removable panels.	1	
8100-0176-000-17	Paint E-One chassis cab - Sikkens paint. Color: FLNA3225 Red.	1	
8100-0182-000-17	Paint Body - Small - For Pumpers, Rear Mounts, S/A Tankers and Rescues. Sikkens paint. Color: FLNA3225 Red.	1	
INTERIOR PAINT			
8150-0010	The interior of the cab to be paint OTO gray	1	
STRIPING			
8300-0002-333-12	NFPA Scotchlite Stripe - 4" wide and straight on front/sides of cab and sides/rear of body. Color: White. Location: top of stripe flush with top of bumper and straight back.	1	
8300-0042	White rubrail scotchlite insert.	1	
8300-0084-000-72	Chevron "A" style 6" printed sheet Scotchlite striping on rear of body. Includes rear facing extrusions, panels and doors inboard/outboard of the beavertails(if applicable). Colors to be Yellow/Red.	1	
WARRANTY / STANDARD & EXTENDED			
9100-0000	Standard 1 Year Warranty	1	
9100-0003	Lifetime Frame Warranty	1	
9100-0004	10 Year/100,000 Mile Structural Warranty - Statement of Warranty	1	
9100-0005	10 Year Stainless Steel Plumbing Warranty - Statement of Warranty	1	
9100-0019	10 Year Limited Paint and Perforation Warranty - For Sikkens Paint	1	
SUPPORT, DELIVERY, INSPECTIONS AND MANUALS			
9300-0009	Manuals, Operator and Service CD-ROM.	1	

Salescode	Extended Description	Qty	
SUPPORT, DELIVERY, INSPECTIONS AND MANUALS			
9300-0016	Approval Drawings-Standard	1	
PRICE			$346,812.

STATE OF OHIO TERM SCHEDULE

4200 SURFACE RD
COLUMBUS, OH 43228

Quote No: 35840

1/11/2010

Quote Rev:11 Drawing Rev:3

Note: Hosebed height may not be the correct measurement for this combo. Compartment height may change.

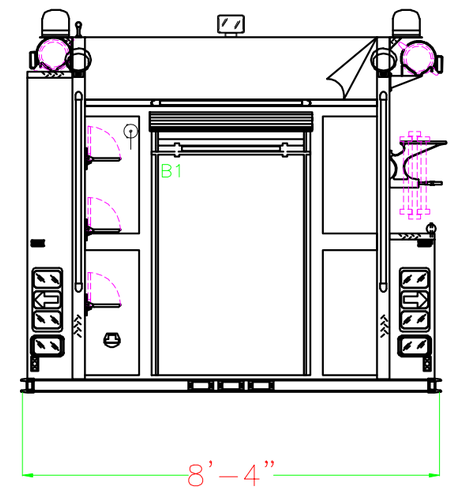

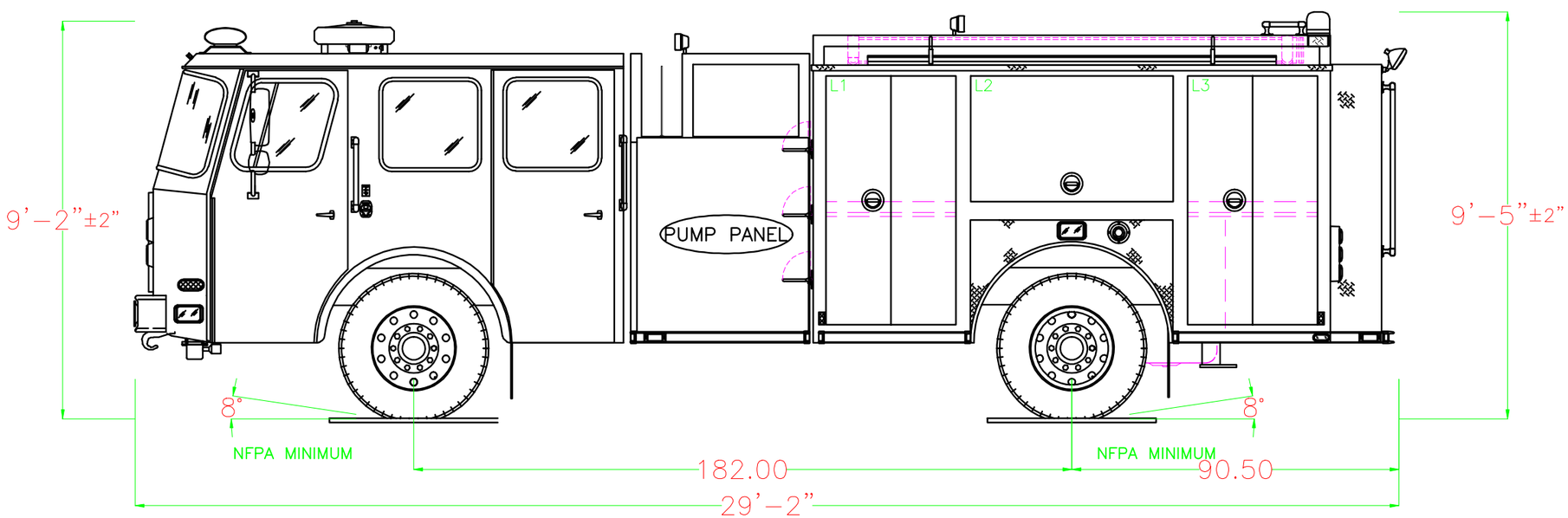

POWERED BY EZDRAW

Notice: This drawing provides a GENERAL REPRESENTATION of the vehicle configuration and should be used for evaluation purposes. The respective dimensions shown,including overall height and length, are estimates and may vary due to manufacturing processes. All other items such as lighting and fixtures, plumbing, compartmentation, and other generally assembled details are shown for REFERENCE ONLY and may not be a direct reflection of the final truck configuration. In ALL situations where this drawing may conflict with the specifications, THE SPECIFICATIONS, AS REFLECTED IN THE APPROVED SHOP ORDER, SHALL PREVAIL. Unless otherwise specified, the proposed apparatus will be manufactured to the latest NFPA recommendations as well as other applicable federally regulated safety regulations. E-One reserves the right to engineer and incorporate design improvements and changes without notice, while adhering to the intent of the specification.

1500 GPM HALE QMAXPUMP
530 TOTAL VOLUME
0 TOTAL FOAM

HOSE LOADS :

	OPENING		INTERIOR DIMENSIONS				
COMPT.	WIDTH	HEIGHT	WIDTH	LOWER HEIGHT	LOWER DEPTH	UPPER HEIGHT	UPPER DEPTH
L1	36	68.75	36	30	26	38.75	12
L2	56	34.75	56	N/A	N/A	34.75	12
L3	36	68.75	36	30	26	38.75	12
R1	36	30	36	30	26	N/A	N/A
R2	36	30	36	30	26	N/A	N/A
B1	36	45	38	30	26	24	14

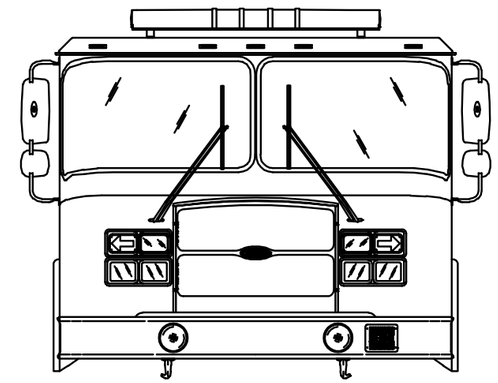

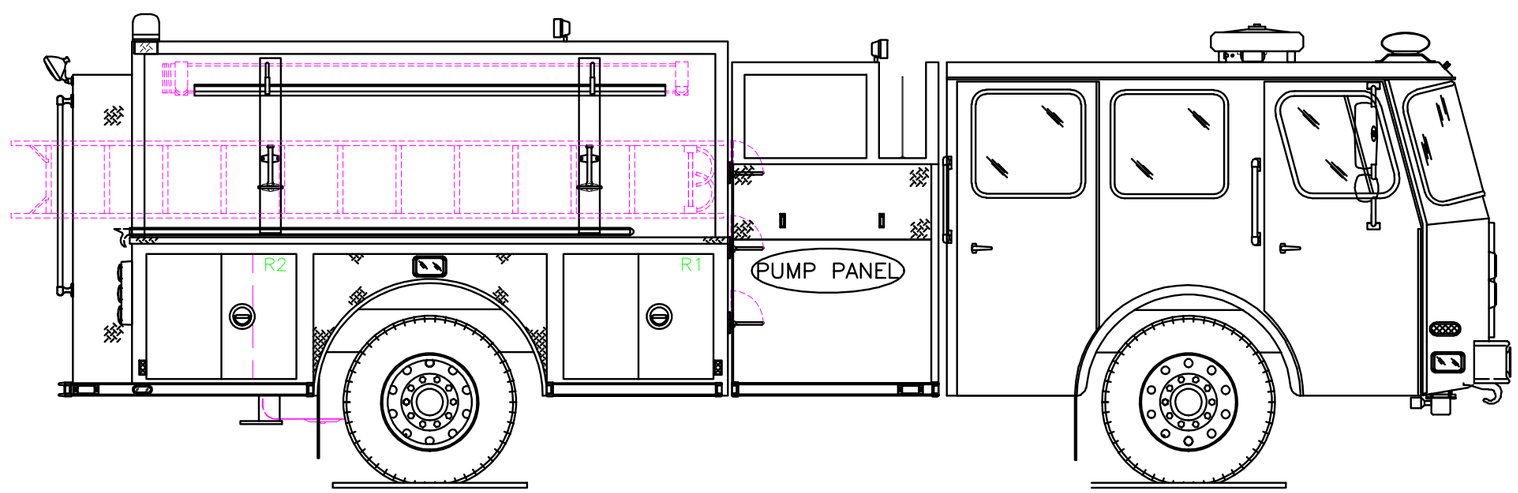

POWERED BY EZDRAW

Fire Apparatus Quotation for:
STATE OF OHIO TERM SCHEDULE

Quotation Number: 35897 Rev: 16

Unit Description: PMPR-TYPH

Quote Description: Mainline Rescue Pumper – Typhoon Chassis Salesperson:

Salescode	Extended Description	Qty	
TESTING COMPLIANCE STANDARD			
1001-0015	The E-ONE supplied components of the vehicle shall meet the requirements of NFPA 1901, 2009 edition.	1	
BUMPERS			
1160-0000	Bumper 10" stainless steel	1	
1160-0011	4" Front Bumper Extension.	1	
FRAME ASSEMBLY			
1250-0003	Frame 10.25 x 3.5 x .375 chassis.	1	
1250-0011	Rear underbody support frame.	1	
AXLE OPTIONS			
1025-0003	Meritor FL941 front axle 16,000lb	1	
1025-0016	Meritor RS-24-160 single rear axle 24,000lb capacity	1	
1025-0029	Front Shock absorbers	1	
SUSPENSIONS			
1070-0001	Rear suspension springs rated equal to the capacity of the axle	1	
WHEEL OPTIONS			
1050-0044	Accuride aluminum wheels for front axle (2).	1	
1050-0045	Accuride aluminum wheels for rear axle (4).	1	
TIRE OPTIONS			
1060-0001	Two Michelin 315 tires model XZA-1 for front axle	1	
1060-0015	Four Michelin 11R rear tires with Mud and Snow tread	1	
1060-0050	Tire pressure monitoring valve stem caps.	1	

Salescode	Extended Description	Qty	
BRAKE SYSTEMS			
1100-0000	16-1/2" x 6" S-cam brakes with ArvinMeritor automatic slack adjusters for front axle	1	
1100-0002	ArvinMeritor 16-1/2" x 7" S-cam brakes with cast brake drums for a single rear axle	1	
1100-0005	Brake system air 4X2/4X4	1	
1100-0006	Parking brake release mounted on the driver's side lower dash	1	
AIR SYSTEM OPTIONS			
1110-0000-001	Inlet for air system. Location: driver door jamb	1	
1110-0002	Air dryer Bendix AD-9	1	
1110-0006	Air lines nylon	1	
1110-0026	Air horns recessed in bumper (PR)	1	
ENGINES & TRANSMISSIONS			
1200-0017	Push button transmission selector	1	
1200-0020	Trans Synd synthetic transmission fluid for EVS 3000.	1	
1200-0097	Electronically limited speed to 68 MPH maximum. Note: Max speed may be set at 65 MPH due to tire rating.	1	
1200-0125	Eng/Trans Cummins ISL 370HP/EVS3000 2010 EPA compliant engine.	1	
SECONDARY BRAKING			
1125-0002	Brake Jacob's engine compression	1	
COOLING PACKAGE			
1800-0013	Cooling system for use with Cyclone II X, Typhoon X, and Quest chassis. For use with 2010 EPA engines. Includes coolant recovery system.	1	
FUEL SYSTEMS			
1350-0003	Fuel system 50 gallon	1	
1350-0013	Fuel water Racor separator to be a bottom drop out style. Shall include indicator light and audible alarm.	1	
1350-0022	Fuel line hose rubber.	1	
ALTERNATOR			
1700-0003	Alternator Leece Neville. (270 amp SAE/240 NFPA rating).	1	
BATTERIES			
1400-0002	Battery four group 31 1000CCA	1	

Salescode	Extended Description	Qty	
CHASSIS OPTIONS			
1680-0006	Drivelines 1710	1	
1680-0011	Tow eyes rear below body painted	1	
1680-0042	Tow hooks front painted in the down position.	1	
1680-0145-J74	Diesel Exhaust Fluid (DEF) 5 gallon tank. Location: R1 floor offset forward.	1	
CAB MODEL			
1520-0013	Typhoon X medium cab with 58" CA	1	
CAB ROOF TYPE			
1615-0010	Cab roof to be "flat" (non-vista).	1	
CAB BADGE PACKAGE			
1610-0000	Cab and body to have applicable E-ONE logos.	1	
GRILLE			
1620-0004	ABS chrome plated grille.	1	
CAB DOOR OPTIONS			
1550-0003	Rear crew cab doors in the medium position.	1	
1550-0005	Driver and Officer cab door windows. Include forward vent window.	1	
1550-0011	Rear crew cab door windows. Includes manual roll-down actuation. Not available with paddle style door latching.	1	
1550-0016	Door panels cab ABS	1	
1550-0025	All cab doors shall have "L" style exterior latches.	1	
1550-0027	Front cab door windows to manually roll up.	1	
1550-0037-659	(4) Incandescent cab step area lighting. Locate each light in on each cab door in the inboard position. Lights to be switched with door ajar.	1	
1550-0044	All cab door kick plates to be made from diamond plate aluminum.	1	
1550-0059-000-72	Reflective Yellow/Red striping positioned in the "A" formation located in the lower cab door panels	1	
MIRRORS			
1670-0038	Lang Mekra mirrors w/LED marker lights and turn signals, remote, heated and convex pair.	1	
MISC EXTERIOR CAB OPTIONS			
1550-0020	Windows cab side fixed driver's side	1	

Salescode	Extended Description	Qty	
MISC EXTERIOR CAB OPTIONS			
1550-0033	Windows cab side fixed officer's side	1	
1675-0022	Pair of 18" handrails located just behind driver and officer front door one each side	1	
1675-0023	Pair of 18" handrails located just behind driver and officer rear door (ALS doors if equipped) one each side.	1	
1675-0030	Mud flaps, front, black with E-ONE logo.	1	
1675-0047	Rear cab wall to be 3/16" aluminum diamond plate.	1	
HVAC			
1515-0017	Air conditioning for the Typhoon X, CII X and Quest with Cummins ISC/ISL engine, radiator mounted condensor.	1	
SEATS			
1510-0003	Seats 911 Brand.	1	
1510-0007	Seat cover material vinyl.	1	
1510-0008	Seat color gray	1	
1510-0035-147	Universal air pack bottle bracket (EA). Location: officer's seat	1	
1510-0035-148	Universal air pack bottle bracket (EA). Location: rear facing driver's side	1	
1510-0035-215	Universal air pack bottle bracket (EA). Location: rear facing officer's side	1	
1510-0038	Driver seat 911 air ride.	1	
1510-0042	Officer seat to be 911 fixed SCBA	1	
1510-0050	Rear facing 911 seat with SCBA driver's side	1	
1510-0053	Rear facing 911 seat with SCBA officer's side	1	
1685-0031	Seating capacity tag of four occupants.	1	
MISC INTERIOR CAB OPTIONS			
1685-0000	Cab interior gray. Does not include engine cover or seat color.	1	
1685-0005	Lexan sun visors, driver and officer's side overhead	1	
1685-0057	Heater Rear with Cover (PR) and front heater with heat to the feet for the driver and officer	1	
1685-0116	Interior grab handle rubber covered (2). Locate one each side at interior of front cab door opening (at rear of opening).	1	
CAB ELECTRICAL OPTIONS			
1750-0019	Battery charger Super Smart 110 volt, 20 amp.	1	
1750-0029	Switch horn button two position DOT/air horn	1	

Salescode	Extended Description	Qty	
CAB ELECTRICAL OPTIONS			
1750-0046-195	Cab Headlights. Position: lower	1	
1750-0059-179-04	Receptacle inlet 20amp with a Yellow cover. Location: outside driver's door next to handrail	1	
1750-0072-593	12 volt electrical outlet in the cab wired battery hot. Location: officer side dash.	2	
1750-0075	English dominant main cab gauge cluster.	1	
1750-0083-172	Turn signal Federal Signal QuadraFlare QL64Z-ARROW LED amber pair located upper headlight bezel	1	
1750-0188	DPF Regeneration override switch.	1	
1750-0198-A31	Battery charger to be located behind driver's seat.	1	
5400-0037	Dome Lts Red/White Incandescent. Package includes two lights mounted in the front and two mounted in the rear of the cab. White light wire through door and light assembly mounted switch. Red light through light assembly mounted switch.	1	
BODY COMPT LEFT SIDE			
3100-0153	Driver side body with full height 42" wide forward and 56" wide rearward enhanced extended compartmentation. Includes (1) 56" wide compartment over the wheel well.	1	
BODY COMPT RIGHT SIDE			
3120-0283	Officer side body with full height 42" wide forward and 56" wide rearward enhanced extended compartmentation. Includes (1) 56" wide compartment over the wheel well and one (1) storage tunnel.	1	
BODY COMPT REAR			
3110-0011	Full Height Rear Compartment with Upper Storage Compartment and Officer Side Storage Tunnel. Includes smooth plate panels and storage access doors with push button latches.	1	
3110-0052	Bolt-on diamond plate tailboard (full width of rear compartment). Includes the enhanced extended side compartment frame work and handrails- (2) vertically on trailing edge of body and horizontally mounted handrail(s) below hosebed.	1	
3110-0092	Enhanced Extended Compartmentation stepped down below hosebed level. Includes embossed diamond plate compartment tops.	1	
DOORS			
3300-0011-004	Door single horizontally hinged lift-up painted. Location(s): L2	1	
3300-0011-016	Door single horizontally hinged lift-up painted. Location(s): R2	1	
3300-0019-027	Door roll up tall (greater than 45") with satin finish ROM. Location(s): B1	1	

Salescode	Extended Description	Qty	
DOORS			
3300-0030-003	Door double 3-point vertically hinged painted. Location(s): L1	1	
3300-0030-005	Door double 3-point vertically hinged painted. Location(s): L3	1	
3300-0030-015	Door double 3-point vertically hinged painted. Location(s): R1	1	
3300-0030-017	Door double 3-point vertically hinged painted. Location(s): R3	1	
SHELVES			
3370-0025-101	Permanent shelf. Locate in R1 at offset (above extrusion if applicable).	1	
3370-0025-102	Permanent shelf. Locate in R3 at offset (above extrusion if applicable).	1	
COVERS			
3305-0007-000-02	Vinyl Red hosebed cover with attached rear flap(s).	1	
3305-0008-000-02	Vinyl Red crosslay cover with attached side flaps.	1	
PUMP MODULE			
3130-0004	Pump module. Includes 45" wide pump panel opening and running boards.	1	
3130-0013	Upper SM pump module with single stacked double crosslays and diamond plate storage pan.	1	
3130-0167	Pump Module to be 76" wide (side to side). Includes upper, lower, crosswalk, speedlay and tranverse module(s) if applicable.	1	
PUMP PANELS			
3134-0011	Officer side pump panel to be vertically hinged on forward extrusion. Panel(s) to be secured in the closed position with push button latches. Upper panel to be held open with gas shock.	1	
3134-0016	Stainless steel driver and officer side pump panels.	1	
3134-0064	The gauge panel(s) on the driver side of the Side Mount module to be hinged upward. Panel(s) to include (2) mechanical/pneumatic (as applicable to panel size) hold opens and latches.	1	
MISC PUMP PANEL OPTIONS			
4460-0003	Pump Panel Tags Color Coded per NFPA Compliance	1	
PUMP MODULE OPTIONS			
3136-0048	Notched crosslay divider(s) on both ends for preconnect line(s) nozzle end storage with NFPA cover(s) in closed position .	1	
3136-0058	E-One Logo. Mounted one each side on pump module/preconnect panels. Logo to be sized as applicable to available space on panel(s).	1	

Salescode	Extended Description	Qty	
WATER TANK			
4010-0035	530 Gallon "R" Water Tank Note: Any foam cell(s) will reduce the overall water capacity. Tank capacity is 530 US gallon / 441 Imperial gallons / 2006 Liters.	1	
TANK PLUMBING			
4450-0010	2" Tank Fill Akron Manual Valve	1	
4450-0119	3" Tank To Pump Akron Manual Valve w/4" Plumbing	1	
LADDER STORAGE / RACKS			
3365-0028	Hard Suction Storage Rack. Driver side compartment top. Includes spring hold downs and scuff plates behind spring mounts (as applicable).	1	
3365-0035	Hard Suction Storage Rack. Officer side compartment top. Includes spring hold downs and scuff plates behind spring mounts (as applicable).	1	
3365-0049	Brand of ladders capable of being carried on unit to be Alco-Lite.	1	
3365-0087-C57	The length of ladder(s) capable of being stored to be the following length: 24' 2-Section and 14' roof ladder.	1	
3365-0149-I32	Storage tunnel capable of holding: (1) 2-Section, (1) Roof, (1) Attic, (2) pike poles in Officer Side Storage Tunnel.	1	
HANDRAILS / STEPS			
3330-0007-060	Folding Step. Location officer side front compartment face. Each location requires a minimum of (1) handrail per NFPA.	3	
3330-0007-062	Folding Step. Location driver side front compartment face. Each location requires a minimum of (1) handrail per NFPA.	3	
3330-0024	Steps rear NFPA. Includes folding steps on driver side (staggered stepped as applicable with tailboard depth) for NFPA hosebed access and handrail mounted on driver side upper hosebed side (as applicable).	1	
MISC BODY OPTIONS			
3090-0002	The unit has no overall height restrictions.	1	
3090-0004	The unit has no overall length restrictions.	1	
3090-0007	The hosebed is to have a NFPA capacity.	1	
3340-0004	Hosebed above the booster tank. Includes forward hosebed and tower(s) cover plate work. Hosebed adjustable divider extrusion rearward of the furthest tower is to run full width of the hosebed.	1	
3340-0015	Diamond plate single axle wheel well. Includes bolt-on composite wheel well liners and aluminum fenderettes.	1	
3340-0035	Divider Long. To run full length of hosebed (front to rear).	1	
3340-0058	Recessed fuel fill driver side wheel well.	1	

Salescode	Extended Description	Qty	
MISC BODY OPTIONS			
3340-0074	Body mainframe and hosebed side assemblies for a 85" high body.	1	
3340-0093	Mud flaps, rear, black with E-ONE logo.	1	
3340-0110	The rear of each hosebed divider to have a hand hold cutout.	1	
3340-0145	Rubrail for the body and pump area module(s).	1	
SCBA BOTTLE STORAGE			
3320-0020	SCBA Bottle Storage. (4) Fire Shopp SCBA bottle storage with hinged doors with push button latches. (2) officer side and (2) driver side in wheel well area.	1	
PUMPS			
4005-0016	Hale QMAX 1500-2250 GPM single stage Pump	1	
4005-0031	Rating 1500 GPM	1	
PUMP CERTIFICATION			
4475-0000	Pump certification 750-2250 GPM	1	
PUMP OPTIONS			
4015-0007	Pump Cooler	1	
4015-0008	Zinc Anodes for Hale Pump - (Pair) (1) Discharge side and (1) Intake Side	1	
4015-0022	Pump Seal Mechanical - Hale	1	
4015-0052-198	Steamers to be Flush Location: driver's side.	1	
4015-0052-199	Steamers to be Flush Location: officer's side.	1	
4015-0098	Manual operated master pump drain. The master drain shall be clearly marked and placed in accessible location on pump panel.	1	
INTAKES			
4440-0005	2.5" Left Intake Akron Manual Valve	1	
INTAKE OPTIONS			
4445-0016	Valve Relief Intake - Hale 2.5"	1	
DISCHARGES AND PRECONNECTS			
4415-0012-654	1.5" Crosslay with Akron Manual Valve. Location: crosslay 1 & 2	2	
4415-0022-350	2.5" Left Rear Discharge Akron Manual Valve Location: left rear discharge	1	
4415-0034-583	3" Right Pump Panel Discharge Akron Manual Valve Location: right side discharge 1	1	
4415-0041	3" Deck Gun Discharge Akron Manual Valve	1	

Salescode	Extended Description	Qty	
DISCHARGES AND PRECONNECTS			
4415-0161-581	2.5" Left Panel Discharge Akron Manual Valve w/30 Degree Droop Location: left side discharge 1	1	
4415-0161-582	2.5" Left Panel Discharge Akron Manual Valve w/30 Degree Droop Location: left side discharge 2	1	
4415-0164-584	2.5" Right Panel Discharge Akron Manual Valve w/30 Degree Droop Location: right side discharge 2	1	
DISCHARGE OPTIONS			
4417-0058-350	Bleeder Drain Valve Plumbed to: left rear discharge	1	
4417-0058-356	Bleeder Drain Valve Plumbed to: deck gun	1	
4417-0058-573	Bleeder Drain Valve Plumbed to: crosslay preconnect	2	
4417-0058-575	Bleeder Drain Valve Plumbed to: left discharge	2	
4417-0058-576	Bleeder Drain Valve Plumbed to: right discharge	2	
4417-0070	Push/Pull "T" Handle Controls	1	
PRESSURE GOVERNORS			
4465-0005	Class1 Captain pressure governor.	1	
GAUGES			
4435-0001	Class 1 Intelli-Tank Water Tank Level Gauge	1	
4435-0013	Class 1 Pressure 4.5" Gauge (30-0-600 PSI)	2	
4435-0015-350	2.5" Class 1 Pressure Gauge (30-0-600). Discharge: left rear discharge	1	
4435-0015-352	2.5" Class 1 Pressure Gauge (30-0-600). Discharge: 1.5 in. crosslay preconnect	2	
4435-0015-356	2.5" Class 1 Pressure Gauge (30-0-600). Discharge: deck gun	1	
4435-0015-581	2.5" Class 1 Pressure Gauge (30-0-600). Discharge: left side discharge 1	1	
4435-0015-582	2.5" Class 1 Pressure Gauge (30-0-600). Discharge: left side discharge 2	1	
4435-0015-583	2.5" Class 1 Pressure Gauge (30-0-600). Discharge: right side discharge 1	1	
4435-0015-584	2.5" Class 1 Pressure Gauge (30-0-600). Discharge: right side discharge 2	1	
4435-0069	Enfo IV System on Pump Operator's Panel	1	
ELECTRICAL SYSTEMS			
5010-0002	Multiplex electrical system for pumper / tanker / rescue.	1	
5010-0003	Multiplex modem kit. Includes cable, modem, and adapter harness.	1	
5010-0004	Multiplex Data Logger	1	
5010-0013-E91	Vehicle data recorder - 2009 NFPA compliant. Includes occupant detection with	1	

Salescode	Extended Description	Qty	
ELECTRICAL SYSTEMS			
	display. Display location: Driver side of center dash electrical cover.		
LIGHT BARS			
5300-0021	Light bar Federal Signal JetStream 60" LED. Red Solaris reflectors with clear domes. NFPA Compliant, does not require 2 addl side facing bars. Location: Centered on the front cab roof	1	
WARNING LIGHT PACKAGES			
5550-0057-535	Federal Signal QuadraFlare LED lower level warning light package. Includes (8) QL64XF-R LED light heads with bezels and (2) Model 3300-04 LED light heads. Locate side facing lights: at forward most position, centered in rear wheelwell, and side facing at rear of body in rubrail if equipped.	1	
5550-0067	Flash rate for Federal QuadraFlare LED lower level warning lights to be set at pattern 4, alternating quad flash (75 QFPM).	1	
WARNING LIGHTS			
5600-0034-479-09	Federal Model SY12FS Sentry (PR) with driver amber, officer red domes. Location: rear upper body on aerial style brackets.	1	
5600-0149-170	Hazard (door ajar) light 2.5" incandescent. Location: center overhead	1	
SIRENS			
5500-0009	Federal PA300 siren recessed mounted.	1	
5500-0024-170	The electronic siren control is to be located on the center overhead.	1	
SPEAKERS			
5510-0029-209	Speaker Federal Dynamax ES100-EF thru bumper. Location: driver side front bumper.	1	
DOT LIGHTING			
5150-0017	License plate light LED with chrome housing located at the rear of the body.	1	
5150-0025	Marker light LED body/cab package. E-One custom cab and pumper or tanker body only.	1	
5150-0059	Federal Signal QuadraFlare LED vertical mount taillights. Includes LED stop/tail, arrow turn and backup lights with vertical Cast 3 housing and weatherproof connectors.	1	
LIGHTS - COMPARTMENT, STEP & GROUND			
5380-0009	Compartment light package incandescent for medium bodies.	1	
5380-0027	Ground light package for cab and body - small.	1	

Salescode	Extended Description	Qty	
LIGHTS - COMPARTMENT, STEP & GROUND			
5380-0035	Step light package body - large.	1	
LIGHTS - DECK AND SCENE			
5390-0000-395	Deck Light - Unity 12V (PR) Location: rear body/beavertail area on the trailing edge up high	1	
5390-0003	Hosebed light Trucklite. Locate center front of hosebed. Switched with work light switch in cab.	1	
5390-0022	Crosslay light Trucklite. Locate to rear of crosslay (SM) and forward of crosslay (TM as applicable). Switched with work light switch in cab.	1	
LIGHTS - NON-WARNING			
5400-0003	Engine Compartment Light (EA).	1	
5400-0008	(1) pump panel light over the pump control area to be wired to come on when pump shift is placed to pump.	1	
5400-0010	Incandescent pump compartment light (EA).	1	
5400-0039	Spotlight Specialty 2150 hand held located on officer's side of cab dash - hardwired.	1	
5400-0047	Pump panel light package with (3) lights per side pump panel. Pump panels over 45" may require additional lights. Side mount only.	1	
CONTROLS / SWITCHES			
5100-0000-199	Foot Switch to control air horns located officer's side	1	
5100-0007-198	Foot Switch to control electronic siren located driver's side	1	
MISC ELECTRICAL			
1750-0082-762	12V power distribution module. Includes (6) battery hot and (6) switched hot circuits. 100 amps max (IATS). Location: behind officer's seat	1	
5110-0017	Back up alarm 97 dB(A).	1	
HAND TOOLS			
7600-0005	Pike Pole Fiberglass 6'	1	
7600-0007	Pike Pole Fiberglass 10'	1	
HOSE / NOZZLES			
7700-0004	Hard Suction Hose 6" with Pyrolite Couplings	2	
GROUND LADDERS			
7800-0007	Alco-Lite PRL-14 Roof Ladder	1	

Salescode	Extended Description	Qty	
GROUND LADDERS			
7800-0016	Alco-Lite PEL-24 Extension Ladder	1	
7800-0032	Alco-Lite 10' Folding Ladder w/Shoes - FL10 Alco-Lite 10FT folding aluminum ladder with safety shoes.	1	
MISC LOOSE EQUIPMENT			
7900-0010	Chrome Barrel Strainer 6"	1	
7900-0014	DOT Required Drive Away Kit - Kit includes three (3) triangular warning reflectors with carrying case. This kit is for the end user and is to remain with the truck.	1	
EXTERIOR PAINT			
8100-0089	All applicable pump/pre-connect application modules are to have a sanded finish (not painted job color). Includes upper and lower pump modules, crosswalk module and/or speedlay/pre-connect module (as applicable). Rear mounted body/pump module to be painted job color.	1	
8100-0116	Rear body surface to have a sanded finish (not painted job color). Includes hinged doors that do not have discrete sales codes and removable panels.	1	
8100-0176-000-17	Paint E-One chassis cab - Sikkens paint. Color: FLNA3225 Red.	1	
8100-0182-000-17	Paint Body - Small - For Pumpers, Rear Mounts, S/A Tankers and Rescues. Sikkens paint. Color: FLNA3225 Red.	1	
INTERIOR PAINT			
8150-0010	The interior of the cab to be paint OTO gray	1	
STRIPING			
8300-0002-333-12	NFPA Scotchlite Stripe - 4" wide and straight on front/sides of cab and sides/rear of body. Color: White. Location: top of stripe flush with top of bumper and straight back.	1	
8300-0042	White rubrail scotchlite insert.	1	
8300-0084-000-72	Chevron "A" style 6" printed sheet Scotchlite striping on rear of body. Includes rear facing extrusions, panels and doors inboard/outboard of the beavertails(if applicable). Colors to be Yellow/Red.	1	
WARRANTY / STANDARD & EXTENDED			
9100-0000	Standard 1 Year Warranty	1	
9100-0003	Lifetime Frame Warranty	1	
9100-0004	10 Year/100,000 Mile Structural Warranty - Statement of Warranty	1	
9100-0005	10 Year Stainless Steel Plumbing Warranty - Statement of Warranty	1	
9100-0019	10 Year Limited Paint and Perforation Warranty - For Sikkens Paint	1	

Salescode	Extended Description	Qty	
SUPPORT, DELIVERY, INSPECTIONS AND MANUALS			
9300-0009	Manuals, Operator and Service CD-ROM.	1	
9300-0016	Approval Drawings-Standard	1	
PRICE			$328,540.

STATE OF OHIO TERM SCHEDULE

4200 SURFACE RD
COLUMBUS, OH 43228

Quote No: 35897

1/11/2010

Quote Rev:16 Drawing Rev:3

Note: Hosebed height may not be the correct measurement for this combo. Compartment height may change.

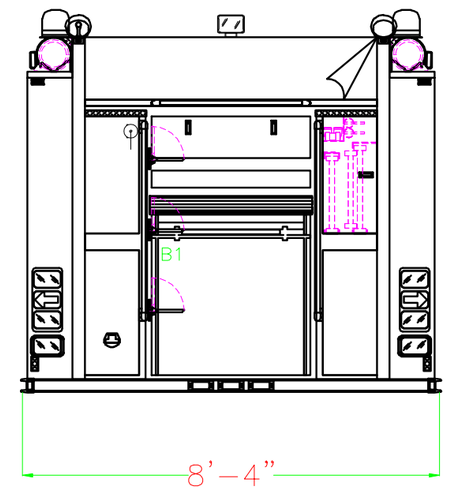

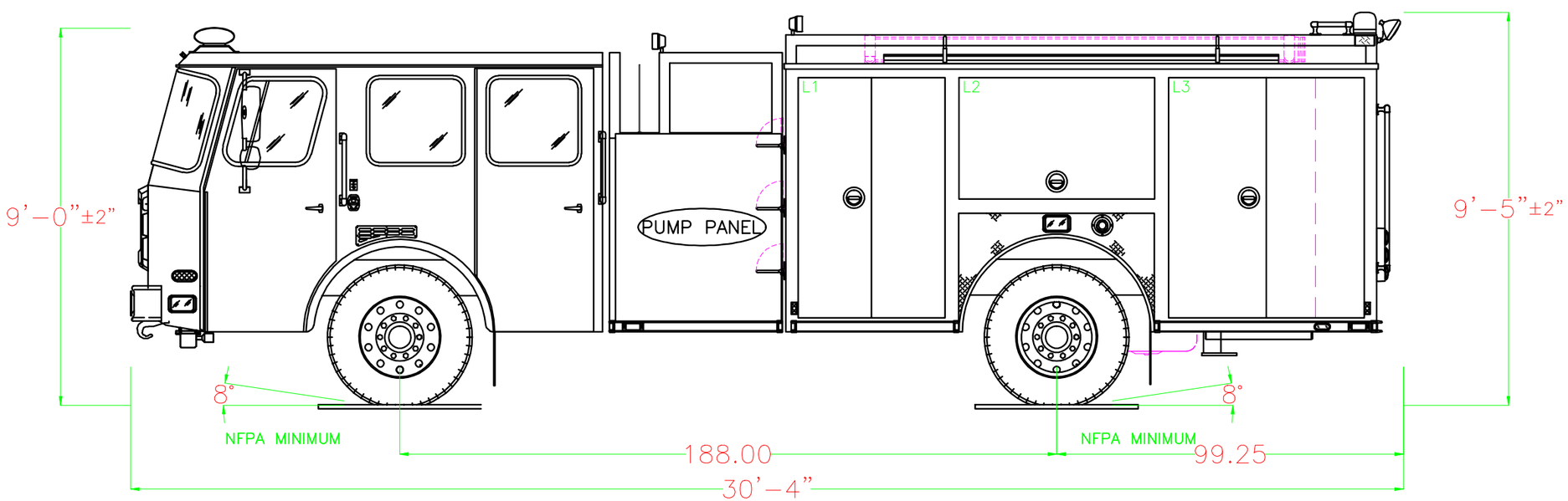

POWERED BY EZDRAW

Notice: This drawing provides a GENERAL REPRESENTATION of the vehicle configuration and should be used for evaluation purposes. The respective dimensions shown,including overall height and length, are estimates and may vary due to manufacturing processes. All other items such as lighting and fixtures, plumbing, compartmentation, and other generally assembled details are shown for REFERENCE ONLY and may not be a direct reflection of the final truck configuration. In ALL situations where this drawing may conflict with the specifications, THE SPECIFICATIONS, AS REFLECTED IN THE APPROVED SHOP ORDER, SHALL PREVAIL. Unless otherwise specified, the proposed apparatus will be manufactured to the latest NFPA recommendations as well as other applicable federally regulated safety regulations. E-One reserves the right to engineer and incorporate design improvements and changes without notice, while adhering to the intent of the specification.

1500 GPM HALE QMAXPUMP
530 TOTAL VOLUME
0 TOTAL FOAM

HOSE LOADS :

	OPENING		INTERIOR DIMENSIONS				
COMPT.	WIDTH	HEIGHT	WIDTH	LOWER HEIGHT	LOWER DEPTH	UPPER HEIGHT	UPPER DEPTH
L1	42	68.75	42	30	26	38.75	26
L2	56	34.75	56	N/A	N/A	34.75	26
L3	56	68.75	56	30	26	38.75	26
R1	42	68.75	42	30	26	38.75	12
R2	56	34.75	56	N/A	N/A	34.75	12
R3	56	68.75	56	30	26	38.75	12
B1	36	45	38	30	26	24	14

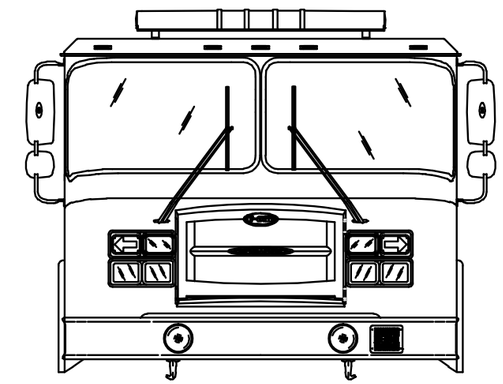

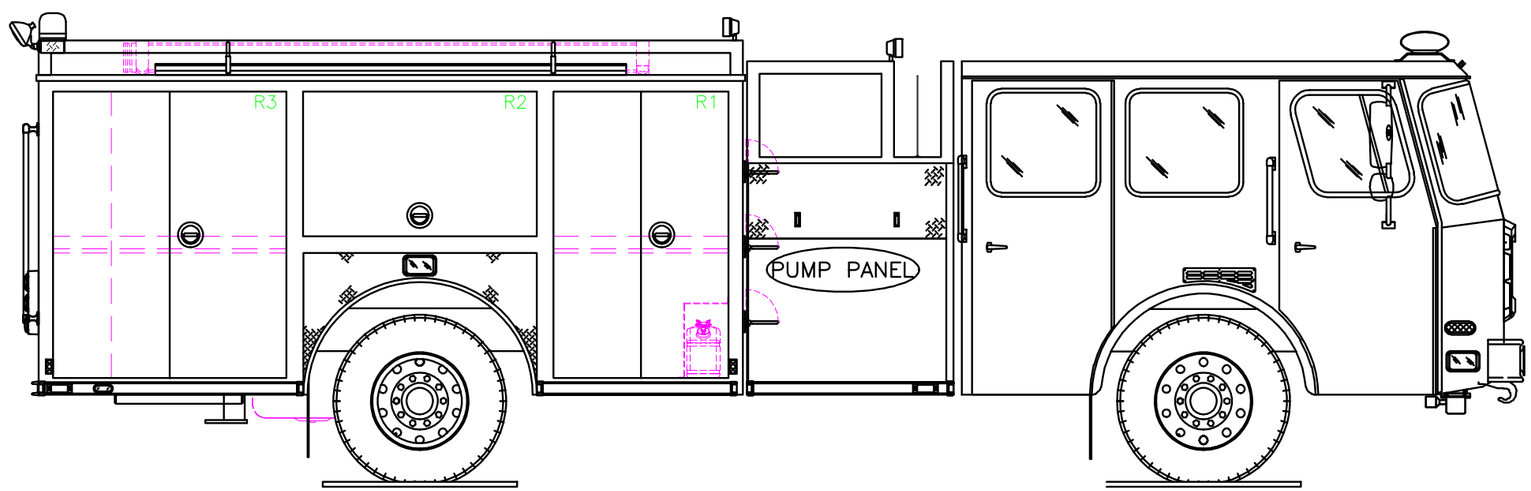

POWERED BY EZDRAW

Fire Apparatus Quotation for:
STATE OF OHIO TERM SCHEDULE

Quotation Number: 35910 Rev: 9

Unit Description: PMPR-CYC2

Quote Description: Mainline Rescue Pumper - Cyclone II Chassis Salesperson:

Salescode	Extended Description	Qty	
TESTING COMPLIANCE STANDARD			
1001-0015	The E-ONE supplied components of the vehicle shall meet the requirements of NFPA 1901, 2009 edition.	1	
BUMPERS			
1160-0000	Bumper 10" stainless steel	1	
1160-0011	4" Front Bumper Extension.	1	
FRAME ASSEMBLY			
1250-0003	Frame 10.25 x 3.5 x .375 chassis.	1	
1250-0011	Rear underbody support frame.	1	
AXLE OPTIONS			
1025-0009	Meritor FL943 front axle 18,000lb	1	
1025-0016	Meritor RS-24-160 single rear axle 24,000lb capacity	1	
1025-0029	Front Shock absorbers	1	
SUSPENSIONS			
1070-0001	Rear suspension springs rated equal to the capacity of the axle	1	
WHEEL OPTIONS			
1050-0044	Accuride aluminum wheels for front axle (2).	1	
1050-0045	Accuride aluminum wheels for rear axle (4).	1	
TIRE OPTIONS			
1060-0001	Two Michelin 315 tires model XZA-1 for front axle	1	
1060-0015	Four Michelin 11R rear tires with Mud and Snow tread	1	
1060-0050	Tire pressure monitoring valve stem caps.	1	

Salescode	Extended Description	Qty	
BRAKE SYSTEMS			
1100-0000	16-1/2" x 6" S-cam brakes with ArvinMeritor automatic slack adjusters for front axle	1	
1100-0002	ArvinMeritor 16-1/2" x 7" S-cam brakes with cast brake drums for a single rear axle	1	
1100-0005	Brake system air 4X2/4X4	1	
1100-0006	Parking brake release mounted on the driver's side lower dash	1	
AIR SYSTEM OPTIONS			
1110-0000-001	Inlet for air system. Location: driver door jamb	1	
1110-0002	Air dryer Bendix AD-9	1	
1110-0006	Air lines nylon	1	
1110-0026	Air horns recessed in bumper (PR)	1	
ENGINES & TRANSMISSIONS			
1200-0017	Push button transmission selector	1	
1200-0021	Trans Synd synthetic transmission fluid for EVS 4000.	1	
1200-0059	Eng/Trans Cummins ISM 450HP/EVS4000 2007 EPA Compliant Engine	1	
1200-0097	Electronically limited speed to 68 MPH maximum. Note: Max speed may be set at 65 MPH due to tire rating.	1	
SECONDARY BRAKING			
1125-0002	Brake Jacob's engine compression	1	
COOLING PACKAGE			
1800-0005	Cooling system for use with Cyclone II X, Typhoon X, and Quest chassis. Includes coolant recovery system.	1	
FUEL SYSTEMS			
1350-0003	Fuel system 50 gallon	1	
1350-0013	Fuel water Racor separator to be a bottom drop out style. Shall include indicator light and audible alarm.	1	
1350-0022	Fuel line hose rubber.	1	
ALTERNATOR			
1700-0003	Alternator Leece Neville. (270 amp SAE/240 NFPA rating).	1	
BATTERIES			
1400-0002	Battery four group 31 1000CCA	1	

Salescode	Extended Description	Qty	
CHASSIS OPTIONS			
1680-0005	Thermatic Fan Clutch	1	
1680-0007	Drivelines 1810. Required on 1550 lb/ft torque engines	1	
1680-0011	Tow eyes rear below body painted	1	
1680-0042	Tow hooks front painted in the down position.	1	
CAB MODEL			
1520-0008	Cyclone II X medium cab with 58" CA	1	
CAB ROOF TYPE			
1615-0010	Cab roof to be "flat" (non-vista).	1	
CAB BADGE PACKAGE			
1610-0000	Cab and body to have applicable E-ONE logos.	1	
CAB DOOR OPTIONS			
1550-0003	Rear crew cab doors in the medium position.	1	
1550-0005	Driver and Officer cab door windows. Include forward vent window.	1	
1550-0011	Rear crew cab door windows. Includes manual roll-down actuation. Not available with paddle style door latching.	1	
1550-0016	Door panels cab ABS	1	
1550-0025	All cab doors shall have "L" style exterior latches.	1	
1550-0027	Front cab door windows to manually roll up.	1	
1550-0037-659	(4) Incandescent cab step area lighting. Locate each light in on each cab door in the inboard position. Lights to be switched with door ajar.	1	
1550-0044	All cab door kick plates to be made from diamond plate aluminum.	1	
1550-0059-000-72	Reflective Yellow/Red striping positioned in the "A" formation located in the lower cab door panels	1	
MIRRORS			
1670-0038	Lang Mekra mirrors w/LED marker lights and turn signals, remote, heated and convex pair.	1	
MISC EXTERIOR CAB OPTIONS			
1550-0020	Windows cab side fixed driver's side	1	
1550-0033	Windows cab side fixed officer's side	1	
1675-0022	Pair of 18" handrails located just behind driver and officer front door one each side	1	

Salescode	Extended Description	Qty	
MISC EXTERIOR CAB OPTIONS			
1675-0023	Pair of 18" handrails located just behind driver and officer rear door (ALS doors if equipped) one each side.	1	
1675-0030	Mud flaps, front, black with E-ONE logo.	1	
1675-0047	Rear cab wall to be 3/16" aluminum diamond plate.	1	
HVAC			
1515-0018	Air conditioning for the CII X and Quest with Cummins ISM or Detroit Diesel Series 60 engine, roof top mounted condensor.	1	
SEATS			
1510-0003	Seats 911 Brand.	1	
1510-0007	Seat cover material vinyl.	1	
1510-0008	Seat color gray	1	
1510-0035-147	Universal air pack bottle bracket (EA). Location: officer's seat	1	
1510-0035-148	Universal air pack bottle bracket (EA). Location: rear facing driver's side	1	
1510-0035-215	Universal air pack bottle bracket (EA). Location: rear facing officer's side	1	
1510-0038	Driver seat 911 air ride.	1	
1510-0042	Officer seat to be 911 fixed SCBA	1	
1510-0050	Rear facing 911 seat with SCBA driver's side	1	
1510-0053	Rear facing 911 seat with SCBA officer's side	1	
1685-0031	Seating capacity tag of four occupants.	1	
MISC INTERIOR CAB OPTIONS			
1685-0000	Cab interior gray. Does not include engine cover or seat color.	1	
1685-0005	Lexan sun visors, driver and officer's side overhead	1	
1685-0057	Heater Rear with Cover (PR) and front heater with heat to the feet for the driver and officer	1	
1685-0116	Interior grab handle rubber covered (2). Locate one each side at interior of front cab door opening (at rear of opening).	1	
CAB ELECTRICAL OPTIONS			
1750-0019	Battery charger Super Smart 110 volt, 20 amp.	1	
1750-0029	Switch horn button two position DOT/air horn	1	
1750-0046-195	Cab Headlights. Position: lower	1	
1750-0059-179-04	Receptacle inlet 20amp with a Yellow cover. Location: outside driver's door next to	1	

Salescode	Extended Description	Qty	
CAB ELECTRICAL OPTIONS			
	handrail		
1750-0072-593	12 volt electrical outlet in the cab wired battery hot. Location: officer side dash.	2	
1750-0075	English dominant main cab gauge cluster.	1	
1750-0083-172	Turn signal Federal Signal QuadraFlare QL64Z-ARROW LED amber pair located upper headlight bezel	1	
1750-0198-A31	Battery charger to be located behind driver's seat.	1	
5400-0037	Dome Lts Red/White Incandescent. Package includes two lights mounted in the front and two mounted in the rear of the cab. White light wire through door and light assembly mounted switch. Red light through light assembly mounted switch.	1	
BODY COMPT LEFT SIDE			
3100-0153	Driver side body with full height 42" wide forward and 56" wide rearward enhanced extended compartmentation. Includes (1) 56" wide compartment over the wheel well.	1	
BODY COMPT RIGHT SIDE			
3120-0283	Officer side body with full height 42" wide forward and 56" wide rearward enhanced extended compartmentation. Includes (1) 56" wide compartment over the wheel well and one (1) storage tunnel.	1	
BODY COMPT REAR			
3110-0011	Full Height Rear Compartment with Upper Storage Compartment and Officer Side Storage Tunnel. Includes smooth plate panels and storage access doors with push button latches.	1	
3110-0052	Bolt-on diamond plate tailboard (full width of rear compartment). Includes the enhanced extended side compartment frame work and handrails- (2) vertically on trailing edge of body and horizontally mounted handrail(s) below hosebed.	1	
3110-0092	Enhanced Extended Compartmentation stepped down below hosebed level. Includes embossed diamond plate compartment tops.	1	
DOORS			
3300-0011-004	Door single horizontally hinged lift-up painted. Location(s): L2	1	
3300-0011-016	Door single horizontally hinged lift-up painted. Location(s): R2	1	
3300-0019-027	Door roll up tall (greater than 45") with satin finish ROM. Location(s): B1	1	
3300-0030-003	Door double 3-point vertically hinged painted. Location(s): L1	1	
3300-0030-005	Door double 3-point vertically hinged painted. Location(s): L3	1	
3300-0030-015	Door double 3-point vertically hinged painted. Location(s): R1	1	

Salescode	Extended Description	Qty	
DOORS			
3300-0030-017	Door double 3-point vertically hinged painted. Location(s): R3	1	
SHELVES			
3370-0025-101	Permanent shelf. Locate in R1 at offset (above extrusion if applicable).	1	
3370-0025-102	Permanent shelf. Locate in R3 at offset (above extrusion if applicable).	1	
COVERS			
3305-0007-000-02	Vinyl Red hosebed cover with attached rear flap(s).	1	
3305-0008-000-02	Vinyl Red crosslay cover with attached side flaps.	1	
PUMP MODULE			
3130-0004	Pump module. Includes 45" wide pump panel opening and running boards.	1	
3130-0013	Upper SM pump module with single stacked double crosslays and diamond plate storage pan.	1	
3130-0167	Pump Module to be 76" wide (side to side). Includes upper, lower, crosswalk, speedlay and tranverse module(s) if applicable.	1	
PUMP PANELS			
3134-0011	Officer side pump panel to be vertically hinged on forward extrusion. Panel(s) to be secured in the closed position with push button latches. Upper panel to be held open with gas shock.	1	
3134-0016	Stainless steel driver and officer side pump panels.	1	
3134-0064	The gauge panel(s) on the driver side of the Side Mount module to be hinged upward. Panel(s) to include (2) mechanical/pneumatic (as applicable to panel size) hold opens and latches.	1	
MISC PUMP PANEL OPTIONS			
4460-0003	Pump Panel Tags Color Coded per NFPA Compliance	1	
PUMP MODULE OPTIONS			
3136-0048	Notched crosslay divider(s) on both ends for preconnect line(s) nozzle end storage with NFPA cover(s) in closed position .	1	
3136-0058	E-One Logo. Mounted one each side on pump module/preconnect panels. Logo to be sized as applicable to available space on panel(s).	1	
WATER TANK			
4010-0035	530 Gallon "R" Water Tank Note: Any foam cell(s) will reduce the overall water capacity. Tank capacity is 530 US gallon / 441 Imperial gallons / 2006 Liters.	1	

Salescode	Extended Description	Qty	
TANK PLUMBING			
4450-0010	2" Tank Fill Akron Manual Valve	1	
4450-0119	3" Tank To Pump Akron Manual Valve w/4" Plumbing	1	
LADDER STORAGE / RACKS			
3365-0028	Hard Suction Storage Rack. Driver side compartment top. Includes spring hold downs and scuff plates behind spring mounts (as applicable).	1	
3365-0035	Hard Suction Storage Rack. Officer side compartment top. Includes spring hold downs and scuff plates behind spring mounts (as applicable).	1	
3365-0049	Brand of ladders capable of being carried on unit to be Alco-Lite.	1	
3365-0087-C57	The length of ladder(s) capable of being stored to be the following length: 24' 2-Section and 14' roof ladder.	1	
3365-0149-I32	Storage tunnel capable of holding: (1) 2-Section, (1) Roof, (1) Attic, (2) pike poles in Officer Side Storage Tunnel.	1	
HANDRAILS / STEPS			
3330-0007-060	Folding Step. Location officer side front compartment face. Each location requires a minimum of (1) handrail per NFPA.	3	
3330-0007-062	Folding Step. Location driver side front compartment face. Each location requires a minimum of (1) handrail per NFPA.	3	
3330-0024	Steps rear NFPA. Includes folding steps on driver side (staggered stepped as applicable with tailboard depth) for NFPA hosebed access and handrail mounted on driver side upper hosebed side (as applicable).	1	
MISC BODY OPTIONS			
3090-0002	The unit has no overall height restrictions.	1	
3090-0004	The unit has no overall length restrictions.	1	
3090-0007	The hosebed is to have a NFPA capacity.	1	
3340-0004	Hosebed above the booster tank. Includes forward hosebed and tower(s) cover plate work. Hosebed adjustable divider extrusion rearward of the furthest tower is to run full width of the hosebed.	1	
3340-0015	Diamond plate single axle wheel well. Includes bolt-on composite wheel well liners and aluminum fenderettes.	1	
3340-0035	Divider Long. To run full length of hosebed (front to rear).	1	
3340-0058	Recessed fuel fill driver side wheel well.	1	
3340-0074	Body mainframe and hosebed side assemblies for a 85" high body.	1	
3340-0093	Mud flaps, rear, black with E-ONE logo.	1	
3340-0110	The rear of each hosebed divider to have a hand hold cutout.	1	

Salescode	Extended Description	Qty	
MISC BODY OPTIONS			
3340-0145	Rubrail for the body and pump area module(s).	1	
SCBA BOTTLE STORAGE			
3320-0020	SCBA Bottle Storage. (4) Fire Shopp SCBA bottle storage with hinged doors with push button latches. (2) officer side and (2) driver side in wheel well area.	1	
PUMPS			
4005-0016	Hale QMAX 1500-2250 GPM single stage Pump	1	
4005-0031	Rating 1500 GPM	1	
PUMP CERTIFICATION			
4475-0000	Pump certification 750-2250 GPM	1	
PUMP OPTIONS			
4015-0007	Pump Cooler	1	
4015-0008	Zinc Anodes for Hale Pump - (Pair) (1) Discharge side and (1) Intake Side	1	
4015-0022	Pump Seal Mechanical - Hale	1	
4015-0052-198	Steamers to be Flush Location: driver's side.	1	
4015-0052-199	Steamers to be Flush Location: officer's side.	1	
4015-0098	Manual operated master pump drain. The master drain shall be clearly marked and placed in accessible location on pump panel.	1	
INTAKES			
4440-0005	2.5" Left Intake Akron Manual Valve	1	
INTAKE OPTIONS			
4445-0016	Valve Relief Intake - Hale 2.5"	1	
DISCHARGES AND PRECONNECTS			
4415-0012-654	1.5" Crosslay with Akron Manual Valve. Location: crosslay 1 & 2	2	
4415-0022-350	2.5" Left Rear Discharge Akron Manual Valve Location: left rear discharge	1	
4415-0034-583	3" Right Pump Panel Discharge Akron Manual Valve Location: right side discharge 1	1	
4415-0041	3" Deck Gun Discharge Akron Manual Valve	1	
4415-0161-581	2.5" Left Panel Discharge Akron Manual Valve w/30 Degree Droop Location: left side discharge 1	1	
4415-0161-582	2.5" Left Panel Discharge Akron Manual Valve w/30 Degree Droop Location: left side discharge 2	1	

Salescode	Extended Description	Qty	
DISCHARGES AND PRECONNECTS			
4415-0164-584	2.5" Right Panel Discharge Akron Manual Valve w/30 Degree Droop Location: right side discharge 2	1	
DISCHARGE OPTIONS			
4417-0058-350	Bleeder Drain Valve Plumbed to: left rear discharge	1	
4417-0058-356	Bleeder Drain Valve Plumbed to: deck gun	1	
4417-0058-573	Bleeder Drain Valve Plumbed to: crosslay preconnect	2	
4417-0058-575	Bleeder Drain Valve Plumbed to: left discharge	2	
4417-0058-576	Bleeder Drain Valve Plumbed to: right discharge	2	
4417-0070	Push/Pull "T" Handle Controls	1	
PRESSURE GOVERNORS			
4465-0005	Class1 Captain pressure governor.	1	
GAUGES			
4435-0001	Class 1 Intelli-Tank Water Tank Level Gauge	1	
4435-0013	Class 1 Pressure 4.5" Gauge (30-0-600 PSI)	2	
4435-0015-350	2.5" Class 1 Pressure Gauge (30-0-600). Discharge: left rear discharge	1	
4435-0015-352	2.5" Class 1 Pressure Gauge (30-0-600). Discharge: 1.5 in. crosslay preconnect	2	
4435-0015-356	2.5" Class 1 Pressure Gauge (30-0-600). Discharge: deck gun	1	
4435-0015-581	2.5" Class 1 Pressure Gauge (30-0-600). Discharge: left side discharge 1	1	
4435-0015-582	2.5" Class 1 Pressure Gauge (30-0-600). Discharge: left side discharge 2	1	
4435-0015-583	2.5" Class 1 Pressure Gauge (30-0-600). Discharge: right side discharge 1	1	
4435-0015-584	2.5" Class 1 Pressure Gauge (30-0-600). Discharge: right side discharge 2	1	
4435-0069	Enfo IV System on Pump Operator's Panel	1	
ELECTRICAL SYSTEMS			
5010-0002	Multiplex electrical system for pumper / tanker / rescue.	1	
5010-0003	Multiplex modem kit. Includes cable, modem, and adapter harness.	1	
5010-0004	Multiplex Data Logger	1	
5010-0013-E91	Vehicle data recorder - 2009 NFPA compliant. Includes occupant detection with display. Display location: Driver side of center dash electrical cover.	1	
LIGHT BARS			
5300-0021	Light bar Federal Signal JetStream 60" LED. Red Solaris reflectors with clear	1	

Salescode	Extended Description	Qty	
LIGHT BARS			
	domes. NFPA Compliant, does not require 2 addl side facing bars. Location: Centered on the front cab roof		
WARNING LIGHT PACKAGES			
5550-0057-535	Federal Signal QuadraFlare LED lower level warning light package. Includes (8) QL64XF-R LED light heads with bezels and (2) Model 3300-04 LED light heads. Locate side facing lights: at forward most position, centered in rear wheelwell, and side facing at rear of body in rubrail if equipped.	1	
5550-0067	Flash rate for Federal QuadraFlare LED lower level warning lights to be set at pattern 4, alternating quad flash (75 QFPM).	1	
WARNING LIGHTS			
5600-0034-479-09	Federal Model SY12FS Sentry (PR) with driver amber, officer red domes. Location: rear upper body on aerial style brackets.	1	
5600-0149-170	Hazard (door ajar) light 2.5" incandescent. Location: center overhead	1	
SIRENS			
5500-0009	Federal PA300 siren recessed mounted.	1	
5500-0024-170	The electronic siren control is to be located on the center overhead.	1	
SPEAKERS			
5510-0029-209	Speaker Federal Dynamax ES100-EF thru bumper. Location: driver side front bumper.	1	
DOT LIGHTING			
5150-0017	License plate light LED with chrome housing located at the rear of the body.	1	
5150-0025	Marker light LED body/cab package. E-One custom cab and pumper or tanker body only.	1	
5150-0059	Federal Signal QuadraFlare LED vertical mount taillights. Includes LED stop/tail, arrow turn and backup lights with vertical Cast 3 housing and weatherproof connectors.	1	
LIGHTS - COMPARTMENT, STEP & GROUND			
5380-0009	Compartment light package incandescent for medium bodies.	1	
5380-0027	Ground light package for cab and body - small.	1	
5380-0035	Step light package body - large.	1	
LIGHTS - DECK AND SCENE			
5390-0000-395	Deck Light - Unity 12V (PR) Location: rear body/beavertail area on the trailing edge	1	

Salescode	Extended Description	Qty	
LIGHTS - DECK AND SCENE			
	up high		
5390-0003	Hosebed light Trucklite. Locate center front of hosebed. Switched with work light switch in cab.	1	
5390-0022	Crosslay light Trucklite. Locate to rear of crosslay (SM) and forward of crosslay (TM as applicable). Switched with work light switch in cab.	1	
LIGHTS - NON-WARNING			
5400-0003	Engine Compartment Light (EA).	1	
5400-0008	(1) pump panel light over the pump control area to be wired to come on when pump shift is placed to pump.	1	
5400-0010	Incandescent pump compartment light (EA).	1	
5400-0039	Spotlight Specialty 2150 hand held located on officer's side of cab dash - hardwired.	1	
5400-0047	Pump panel light package with (3) lights per side pump panel. Pump panels over 45" may require additional lights. Side mount only.	1	
CONTROLS / SWITCHES			
5100-0000-199	Foot Switch to control air horns located officer's side	1	
5100-0007-198	Foot Switch to control electronic siren located driver's side	1	
MISC ELECTRICAL			
1750-0082-762	12V power distribution module. Includes (6) battery hot and (6) switched hot circuits. 100 amps max (IATS). Location: behind officer's seat	1	
5110-0017	Back up alarm 97 dB(A).	1	
HAND TOOLS			
7600-0005	Pike Pole Fiberglass 6'	1	
7600-0007	Pike Pole Fiberglass 10'	1	
HOSE / NOZZLES			
7700-0004	Hard Suction Hose 6" with Pyrolite Couplings	2	
GROUND LADDERS			
7800-0007	Alco-Lite PRL-14 Roof Ladder	1	
7800-0016	Alco-Lite PEL-24 Extension Ladder	1	
7800-0032	Alco-Lite 10' Folding Ladder w/Shoes - FL10 Alco-Lite 10FT folding aluminum ladder with safety shoes.	1	

Salescode	Extended Description	Qty	
MISC LOOSE EQUIPMENT			
7900-0010	Chrome Barrel Strainer 6"	1	
7900-0014	DOT Required Drive Away Kit - Kit includes three (3) triangular warning reflectors with carrying case. This kit is for the end user and is to remain with the truck.	1	
EXTERIOR PAINT			
8100-0089	All applicable pump/pre-connect application modules are to have a sanded finish (not painted job color). Includes upper and lower pump modules, crosswalk module and/or speedlay/pre-connect module (as applicable). Rear mounted body/pump module to be painted job color.	1	
8100-0116	Rear body surface to have a sanded finish (not painted job color). Includes hinged doors that do not have discrete sales codes and removable panels.	1	
8100-0176-000-17	Paint E-One chassis cab - Sikkens paint. Color: FLNA3225 Red.	1	
8100-0182-000-17	Paint Body - Small - For Pumpers, Rear Mounts, S/A Tankers and Rescues. Sikkens paint. Color: FLNA3225 Red.	1	
INTERIOR PAINT			
8150-0010	The interior of the cab to be paint OTO gray	1	
STRIPING			
8300-0002-333-12	NFPA Scotchlite Stripe - 4" wide and straight on front/sides of cab and sides/rear of body. Color: White. Location: top of stripe flush with top of bumper and straight back.	1	
8300-0042	White rubrail scotchlite insert.	1	
8300-0084-000-72	Chevron "A" style 6" printed sheet Scotchlite striping on rear of body. Includes rear facing extrusions, panels and doors inboard/outboard of the beavertails(if applicable). Colors to be Yellow/Red.	1	
WARRANTY / STANDARD & EXTENDED			
9100-0000	Standard 1 Year Warranty	1	
9100-0003	Lifetime Frame Warranty	1	
9100-0004	10 Year/100,000 Mile Structural Warranty - Statement of Warranty	1	
9100-0005	10 Year Stainless Steel Plumbing Warranty - Statement of Warranty	1	
9100-0019	10 Year Limited Paint and Perforation Warranty - For Sikkens Paint	1	
SUPPORT, DELIVERY, INSPECTIONS AND MANUALS			
9300-0009	Manuals, Operator and Service CD-ROM.	1	
9300-0016	Approval Drawings-Standard	1	

Salescode	Extended Description	Qty	
PRICE			$361,534.

STATE OF OHIO TERM SCHEDULE

4200 SURFACE RD
COLUMBUS, OH 43228

Quote No: 35910

12/7/2009

Quote Rev:8 Drawing Rev:1

Note: Hosebed height may not be the correct measurement for this combo. Compartment height may change.

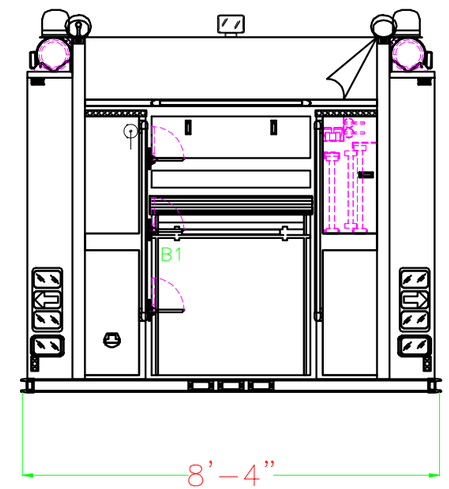

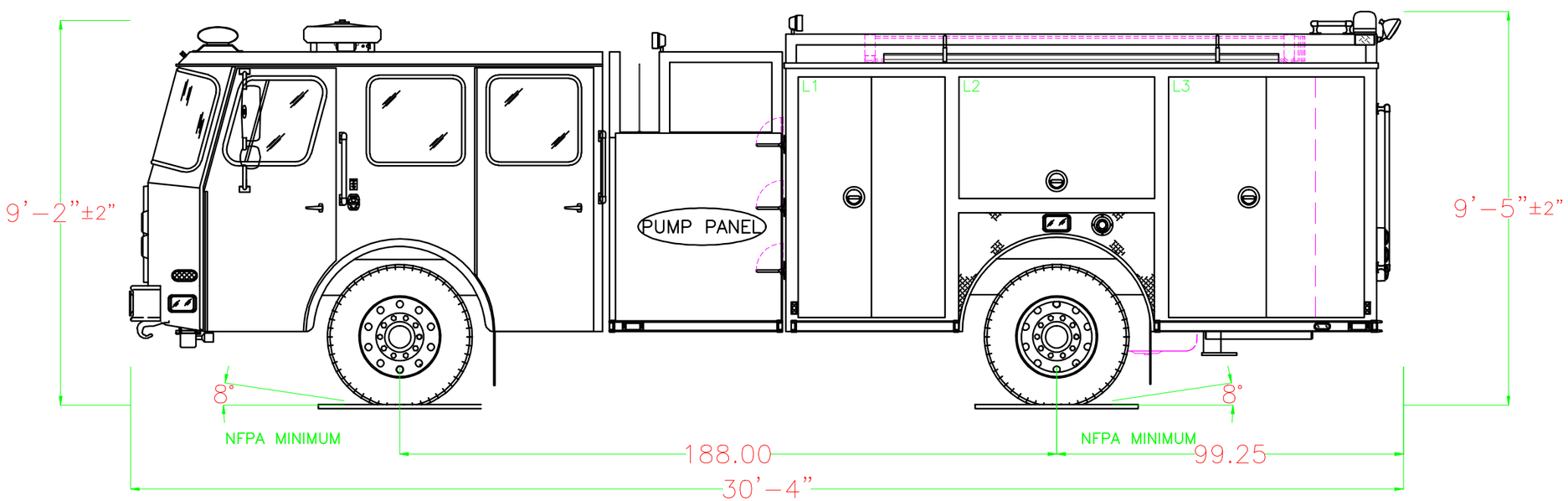

POWERED BY EZDRAW

Notice: This drawing provides a GENERAL REPRESENTATION of the vehicle configuration and should be used for evaluation purposes. The respective dimensions shown,including overall height and length, are estimates and may vary due to manufacturing processes. All other items such as lighting and fixtures, plumbing, compartmentation, and other generally assembled details are shown for REFERENCE ONLY and may not be a direct reflection of the final truck configuration. In ALL situations where this drawing may conflict with the specifications, THE SPECIFICATIONS, AS REFLECTED IN THE APPROVED SHOP ORDER, SHALL PREVAIL. Unless otherwise specified, the proposed apparatus will be manufactured to the latest NFPA recommendations as well as other applicable federally regulated safety regulations. E-One reserves the right to engineer and incorporate design improvements and changes without notice, while adhering to the intent of the specification.

1500 GPM HALE QMAXPUMP
530 TOTAL VOLUME
0 TOTAL FOAM

HOSE LOADS :

	OPENING		INTERIOR DIMENSIONS				
COMPT.	WIDTH	HEIGHT	WIDTH	LOWER HEIGHT	LOWER DEPTH	UPPER HEIGHT	UPPER DEPTH
L1	42	68.75	42	30	26	38.75	26
L2	56	34.75	56	N/A	N/A	34.75	26
L3	56	68.75	56	30	26	38.75	26
R1	42	68.75	42	30	26	38.75	12
R2	56	34.75	56	N/A	N/A	34.75	12
R3	56	68.75	56	30	26	38.75	12
B1	36	45	38	30	26	24	14

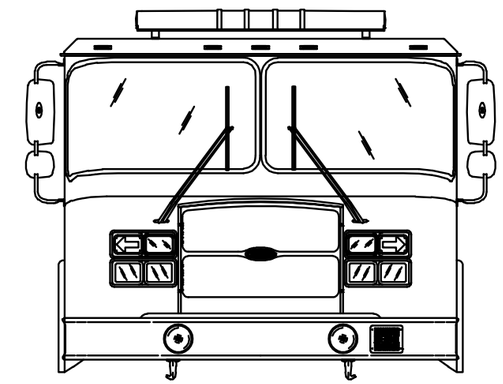

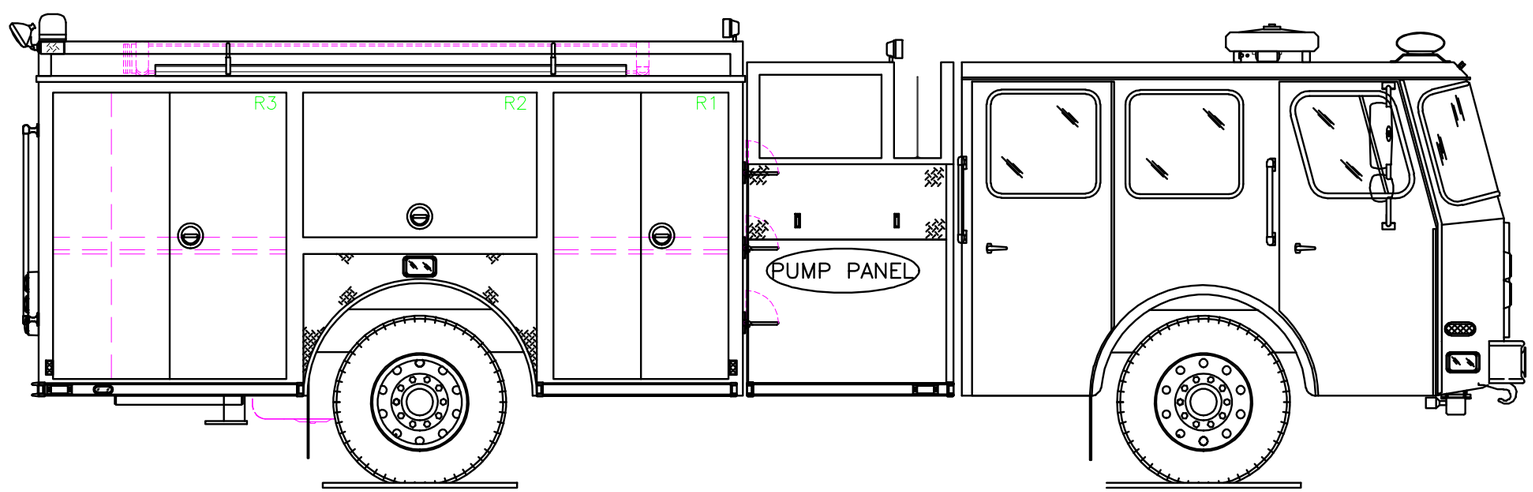

POWERED BY EZDRAW

CUSTOM CHASSIS - MAINLINE PUMPERS

1000	CHASSIS	
1025-0003	Meritor FL941 front axle 16,000lb	$10,280
1025-0004	Meritor FL941 front axle 18,000lb	$11,843
1025-0005	Meritor FL941 front axle 18,700lb	$15,419
1025-0006	Meritor FL941 front axle 20,000lb	$15,976
1025-0009	Meritor FL943 front axle 18,000lb	$12,513
1025-0010	Meritor FL943 front axle 18,700lb	$16,199
1025-0011	Meritor FL943 front axle 20,000lb	$16,870
1025-0012	Meritor FL943 front axle 21,000lb	$17,092
1025-0013	Meritor FL943 front axle 21,500lb	$17,429
1025-0014	Meritor front drive axle and suspension 16,540#	$11,396
1025-0015	Meritor front drive axle and suspension 18,000#	$34,011
1025-0016	Meritor RS-24-160 single rear axle 24,000lb capacity	$10,280
1025-0017	Meritor RS-25-160 single rear axle 27,000lb capacity	$11,508
1025-0018	Meritor RS-30-185 single rear axle 31,000lb capacity	$12,850
1025-0027	Driver controlled rear differential	$732
1025-0028	Koni shock absorbers for front axle - adjustable.	$317
1025-0029	Front Shock absorbers	$170
1025-0030	Stemco oil seal front axle. Chicago Rawhide seal with Stemco sight glass will be supplied when front disc brakes a selected.	$103
1025-0031	Spiral pins front suspension	$1,591
1025-0034	Automatic traction control. In addition to standard ABS system.	$548
1025-0035	Koni shock absorbers Rear axle	$504
1025-0059	Meritor front drive axle and suspension 21,000#	$34,221
1025-0064	Independent front axle/suspension - 18,000 lb. Not available with Series 60 engine.	$31,682
1025-0065	Independent front axle/suspension - 20,000 lb. Not available with Series 60 engine.	$31,682
1025-0066	Independent front axle/suspension - 22,800 lb. Not available with Series 60 engine.	$31,682
1025-0074	Independent front axle/suspension rated at 18,700 lb due to tires (Uses 20,000 lb springs). Not available with Series 60 engine.	$31,682
1025-0075	Independent front axle/suspension rated at 21,000 lb due to tires (Uses 22,800 lb springs). Not available with Series 60 engine.	$31,682
1025-0076	Independent front axle/suspension rated at 21,500 lb due to tires (Uses 22,800 lb springs). Not available with Series 60 engine.	$31,682
1025-0078	S-Cam brakes to have Haldex brand slack adjusters (per axle).	$289
1025-0079	Meritor RS-23-240 two speed single rear axle 24,000lb capacity.	$14,469
1025-0086	Meritor FL941 front axle 18,500lb.	$15,419
1025-0088	Synthetic 75w90 gear oil for rear axle.	$348
1025-0089	Meritor RS-26-185 single rear axle 27,000lb capacity	$12,850
1050-0000	Steel wheels for front axle (2).	$299
1050-0001	Aluminum wheels for front axle (2).	$1,624
1050-0002	Steel wheels for rear axle (4).	$596
1050-0003	Aluminum wheels for rear axle (4).	$3,243
1050-0007	Front axle wheel trim kit. Includes stainless steel lug nut covers and center cap with E-ONE logo. Note: Center cap will have an inspection port IPO a logo if equipped with Stemco oil seals.	$217
1050-0008	Rear axle (single) Wheel Trim kit. Includes stainless steel lug nut covers (chrome plated plastic if applicable) and center cap with E-ONE logo. E-ONE custom chassis w/ steel wheels will have chrome plated plastic lug covers.	$266
1050-0009	Rear axle (tandem) Wheel Trim kit. Includes stainless steel lug nut covers (chrome plated plastic if applicable) and center caps with E-ONE logo. E-ONE custom chassis w/ steel wheels will have chrome plated plastic lug covers.	$596
1050-0017	Each inside wheel of the single rear axle shall have valve stem extensions.	$108
1050-0019	Two steel wheels painted job color on both the inside and outside facing for front axle.	$577
1050-0026	Front axle Wheel Trim kit. Includes stainless steel lug nut covers and center cap (no logo). Note: Center cap will have an inspection port if equipped with Stemco oil seals.	$217
1050-0027	Rear axle (single) wheel trim kit. Includes stainless steel lug nut covers (chrome plated plastic if applicable) and center caps (no logo). E-ONE custom chassis w/ steel wheels will have chrome plated plastic lug covers.	$266
1050-0028	Rear axle (tandem) Wheel Trim kit. Includes stainless steel lug nut covers (chrome plated plastic if applicable) and center cap (No logo). E-ONE custom chassis w/ steel wheels will have chrome plated plastic lug covers.	$596
1050-0030	Rear axle (single) wheel trim kit. Includes stainless steel lug nut covers and center caps (no logo). E-ONE custom chassis w/ steel wheels will have chrome plated plastic lug covers.	$266
1050-0031	Front axle wheel simulator kit. Includes stainless steel wheel simulator and center cap with E-ONE logo. Note: Center cap will have an inspection port IPO a logo if equipped with Stemco oil seals.	$522
1050-0032	Rear axle (single) wheel simulator kit. Includes full stainless steel wheel simulators with integrated lug nut covers and E-ONE logo.	$761
1050-0033	Dura-Brite finish on aluminum wheel (EA). Not available on 13" wheel (425 or 445 tires).	$97
1050-0039	Polish inner and outer aluminum wheel (EA).	$79
1050-0040	Tyron wheel safety bands (PR). Location: [#LOC].	$800
1050-0042	Two heavy duty steel wheels for front axle. For use with 21.5K and greater ratings only.	$1,532
1050-0043	Rear axle (tandem) wheel simulator kit. Includes full stainless steel wheel simulators with integrated lug nut covers and E-ONE logo.	$1,522
1050-0044	Accuride aluminum wheels for front axle (2).	$1,576
1050-0045	Accuride aluminum wheels for rear axle (4).	$3,148

1050-0047	Front axle wheel trim kit. Includes stainless steel "Cover-Up" covers with E-ONE logo. Not available with Stemco oil seals.	$279
1050-0048	Rear axle (single) Wheel Trim kit. Includes stainless steel "Cover-Up" covers with E-ONE logo. Not available with Stemco oil seals.	$357
1050-0049	Rear axle (tandem) Wheel Trim kit. Includes stainless steel "Cover-Up" covers with E-ONE logo.	$714
1060-0001	Two Michelin 315 tires model XZA-1 for front axle	$1,311
1060-0004	Four Michelin 11R tires model XZE2 for rear axle	$2,124
1060-0005	Four Michelin 12R tires model XZE for rear axle	$2,460
1060-0006	Four Michelin 315 tires model XZA-1 for rear axle	$2,507
1060-0008	Eight Michelin 12R tires model XZE for rear axles	$4,247
1060-0010	Two Goodyear 315 tires for front axle	$1,543
1060-0011	Two Goodyear 385 tires for front axle	$1,706
1060-0012	Two Goodyear 425 tires for front axle	$1,863
1060-0015	Four Michelin 11R rear tires with Mud and Snow tread	$2,573
1060-0016	Four Michelin 12R rear tires with Mud and Snow tread	$2,906
1060-0017	Four Michelin 315 rear tires with Mud and Snow tread	$2,951
1060-0018	Four Goodyear 11R rear tires with Mud and Snow tread	$2,906
1060-0019	Four Goodyear 12R rear tires with Mud and Snow tread	$3,241
1060-0020	Four Goodyear 315 rear tires with Mud and Snow tread	$3,411
1060-0028	Four Goodyear 11R rear tires with highway tread	$2,460
1060-0029	Four Goodyear 12R rear tires with highway tread	$2,906
1060-0030	Four Goodyear 315 rear tires with highway tread	$3,130
1060-0042	Two Michelin 365 tires model XZA for front axle. Speed rating for up to 75 mph. Requires alum wheels.	$1,289
1060-0043	Two Michelin 425 tires model XZY3 for front axle	$1,576
1060-0044	Two Michelin 445 tires model XZY3 for front axle.	$1,560
1060-0046	Two Michelin 425 tires model XFE for front axle.	$1,471
1060-0047	Two Michelin 385 tires model XFE for front axle.	$1,355
1060-0049	Tyron tire pressure monitoring system model TPMS. Includes wireless remote display in cab.	$1,032
1060-0051	Two Michelin 385 tires model XZY3 for front axle	$1,460
1060-0053	PressurePro tire pressure monitoring system for single rear axle units. Includes bail mounted display in cab.	$878
1060-0054	PressurePro tire pressure monitoring system for tandem rear axle units. Includes bail mounted display in cab.	$1,050
1060-0060	Two Michelin 315 tires model XZY3 for front axle.	$1,042
1070-0001	Rear suspension springs rated equal to the capacity of the axle	$1,231
1070-0003	Rear suspension air ride rated equal to the capacity of the axle	$5,004
1070-0005	Air ride cab.	$2,573
1070-0007	Shock absorbers rear single axle. Not available on 31,000lb.	$170
1070-0012	Reyco rear suspension springs rated equal to the capacity of the axle.	$1,231
1070-0019	Rear suspension springs rated at 27,000 lbs.	$1,435
1070-0020	Rear axle u-bolts .875". 24K/27K rear axles only. Not available with air ride suspensions.	$95
1100-0000	16-1/2" x 6" S-cam brakes with ArvinMeritor automatic slack adjusters for front axle	$281
1100-0001	Meritor EX225H 17" disc brakes for front axle.	$1,097
1100-0002	ArvinMeritor 16-1/2" x 7" S-cam brakes with cast brake drums for a single rear axle	$281
1100-0003	Meritor EX225H 17" disc brakes for rear axle, maximum capacity 27,000lb.	$1,097
1100-0005	Brake system air 4X2/4X4	$7,433
1100-0007	Parking brake release mounted center of the engine cover	$285
1100-0009	Brake parking front axle	$469
1100-0010	Brake emergency release for spring	$854
1100-0011	Roll Stability Control, Includes ATC. Not available on commercial chassis, tiller or tandem axle custom chassis	$1,777
1100-0018	Dust Shields. Front and Rear Axle. CAM Brakes only.	$327
1100-0019	Dust Shields. Rear Axle. CAM Brakes only.	$198
1100-0020	Compression fittings for all air brake system lines. Includes cab interior air lines as applicable.	$1,098
1100-0023	Stainless steel park brake release guard.	$190
1100-0024	G4 Electronic Stability Control (4x2), Includes RSC and ATC. Not available on 4x4, commercial chassis or tiller.	$3,127
1100-0025	ArvinMeritor 16-1/2" x 8.625" Q-Plus S-cam brakes with cast brake drums for a single rear axle. 24K axle only.	$1,157
1100-0027	Knorr-Bremse 17" disc brakes for front axle. IFS only.	$1,097
1100-0029	2nd parking brake release mounted on the officer's side dash with stainless steel guard.	$798
1100-0030	Brake chambers 30-36 for 24,000# single rear axle.	$486
1100-0032	Hinged stainless steel park brake release guard.	$254
1110-0000	Inlet for air system. Location: [#LOC]	$332
1110-0001	Air inlet auto eject. Includes weatherproof gasketed cover. [#LOC]	$428
1110-0002	Air dryer Bendix AD-9	$432
1110-0003	Air dryer system saver 1200	$522
1110-0004	Tank drains air w/pull cords.	$379
1110-0005	Auto moisture ejectors heated	$376
1110-0007	Air lines braided	$2,024
1110-0008	Gauge air brake application mounted in cab	$272
1110-0011	Gauge air intake restriction	$231
1110-0012	Air outlet off front ACC tank. It shall be located [#LOC]	$332
1110-0013	Air horns shutoff valve. Located in cab accessible by driver.	$96
1110-0025	Thomas 110 volt air compressor plumbed to air brake system.	$1,042
1110-0026	Air horns recessed in bumper (PR)	$738
1110-0027	Isolated air tank. Includes pressure protection valve.	$502
1110-0029	Diamond plate flip cover for air inlet or outlet with label attached with rivets mounted in driver's door jamb.	$102

1110-0040	Dump valve system for rear air ride suspension. Includes three valves, one on each bag and one on supply line. Switch from driver's side overhead console.	$573
1110-0041	Air horns Grover recessed in bumper (PR).	$901
1110-0044	Air inlet auto eject. Includes [#COL] weatherproof gasketed cover. Location: [#LOC]	$428
1110-0045	Gast air compressor 110v model 3HBB-10-M300X.	$962
1110-0046	Kussmaul 12V Auto Drain. For use with Kussmaul air compressor.	$417
1110-0048	Air inlet below bumper driver side. Fitting to be a Hansen male model B40 with protective plastic cover. Includes matching female model 4000 fitting (ship loose).	$428
1110-0049	Air Lines Wrapped in Thermal Loom	$1,638
1110-0050	Air brake lines to have 4 to 6" slack for future service work.	$99
1110-0052	Air horns recessed behind bumper (PR). Includes Federal Signal EF grilles on bumper.	$929
1110-0053	Air horns Grover recessed in front bumper. (1) air horn 21" long, (1) air horn 24.5" long	$942
1110-0054	Relocate air dryer to opposite the exhaust system inside the frame rails.	$239
1110-0055	Air horns will alternate from driver to officer.	$356
1110-0056	Air dryer Bendix ADIP.	$557
1110-0058	Air horns recessed in bumper (PR) with bells behind bumper.	$791
1110-0059	Air horns Grover (1510) recessed in bumper (PR). Locate both to driver side of bumper.	$922
1110-0066	Air horns Grover recessed in front bumper. (1) air horn 21" long, (1) air horn 24.5" long.	$1,105
1125-0000	Retarder Telma focal mounted. Not available on tandem axle or four jack aerials	$9,051
1125-0001	Brake Jacob's exhaust	$673
1125-0002	Brake Jacob's engine compression	$1,566
1125-0003	Transmission retarder Allison	$10,726
1125-0007	Tag located at Jacob Brake Controller. To read: Do Not Operate on Wet or Slippery Surfaces.	$69
1125-0009	Allison retarter to activate per Seattle requirements. Dash label "Switch Retarter Off for Wet or Slippery Road Conditions. Retarder shall activate 30% at zero throttle with the remaining 70% applied sequentially through the brake pedal. The brake/stop light circuit shall activate with retarder application.	$265
1125-0013	Lever control for Telma retarder. 5 position lever.	$260
1150-0054	Hinged diamond plate lid for driver side bumper tray. Includes 1/4 turn latch and gas shock hold open.	$241
1150-0055	Hinged diamond plate lid for center bumper tray. Includes 1/4 turn latch and gas shock hold open.	$265
1150-0056	Hinged diamond plate lid for officer side bumper tray. Includes 1/4 turn latch and gas shock hold open.	$241
1150-0059	Red vinyl lid with velcro fasteners for bumper tray driver side.	$157
1150-0060	Red vinyl lid with velcro fasteners for bumper tray officer side.	$157
1150-0061	Red vinyl lid with velcro fasteners for bumper tray center.	$157
1150-0062	Black vinyl lid with velcro fasteners for bumper tray driver side.	$157
1150-0063	Black vinyl lid with velcro fasteners for bumper tray officer side.	$157
1150-0064	Black vinyl lid with velcro fasteners for bumper tray center.	$157
1150-0065	Diamond plate lid for driver, center, and officer hosetrays. 5.25" high with dual chrome grab hands, rubber hood latches and gas shocks.	$522
1150-0085	Nylon black strap on officer side front bumper tray (EA).	$67
1150-0086	Nylon black strap on driver side front bumper tray (EA).	$67
1150-0087	Nylon black strap on center front bumper tray (EA).	$67
1150-0094	Hinged diamond plate lid for driver side bumper tray. Includes D-Ring latch and gas shock hold open.	$264
1150-0095	Hinged diamond plate lid for center bumper tray. Includes D-Ring latch and gas shock hold open.	$288
1150-0096	Hinged diamond plate for officer side bumper tray. Includes D-Ring latch and gas shock hold open.	$264
1150-0097	Tray driver side bumper outboard for hydraulic/cord reel.	$607
1150-0098	Tray officer side bumper outboard for hydraulic/cord reel.	$607
1150-0100	Hinged floor of center bumper tray. Hinged to the rear.	$671
1150-0102	Diamond plate lid for driver hosetray. 5.25" high with chrome grab handle, rubber hood latch, gas shock and water stop angle.	$342
1150-0103	Diamond plate lid for center hosetray. 5.25" high with chrome grab handle, rubber hood latch, gas shock and water stop angle.	$342
1150-0104	Diamond plate lid for officer hosetray. 5.25" high with chrome grab handle, rubber hood latch, gas shock and water stop angle.	$342
1150-0105	Diamond plate lid for center and driver hosetrays; 2/3 lid. 5.25" high with chrome grab handle, rubber hood latches, gas shocks and water stop angle.	$431
1150-0106	Diamond plate lid for center and officer hosetrays; 2/3 lid. 5.25" high with chrome grab handle, rubber hood latches, gas shocks and water stop angle.	$431
1150-0107	Nylon black strap with clip release on officer side front bumper tray.	$121
1150-0108	Nylon black strap with clip release on driver side front bumper tray.	$121
1150-0109	Nylon black strap with clip release on center front bumper tray.	$121
1150-0111	Additional divider for front bumper hose tray.	$90
1150-0112	Hinged diamond plate lid for center bumper tray. Includes D-Ring latch and moon spring hold open.	$288
1150-0113	Tray center of bumper with slats 34x11x14 for 150 feet of 1 3/4" double jacket hose for use with center bumper speaker option	$607
1150-0114	Access cover in center bumper tray for center bumper mounted speaker 8"x8" in dimension	$81
1150-0115	Notch bumper tray lid for preconnected hose. Notch location: [#LOC]	$118
1150-0116	Bumper tray driver's side with slats 10 inches deep (approx 9 inches to slats).	$399
1150-0117	Bumper tray driver's side with slats 12 inches deep (approx 11 inches to slats).	$399
1150-0118	Bumper tray driver's side with slats 14 inches deep (approx 13 inches to slats).	$399
1150-0119	Bumper tray center of bumper with slats 10 inches deep (approx 9 inches to slats).	$399
1150-0120	Bumper tray center of bumper with slats 12 inches deep (approx 11 inches to slats).	$399
1150-0121	Bumper tray center of bumper with slats 14 inches deep (approx 13 inches to slats).	$399
1150-0122	Bumper tray officer's side with slats 10 inches deep (approx 9 inches to slats).	$399
1150-0123	Bumper tray officer's side with slats 12 inches deep (approx 11 inches to slats).	$399
1150-0124	Bumper tray officer's side with slats 14 inches deep (approx 13 inches to slats).	$399

1150-0125	Divider center bumper hose tray running front to back with adjustable track (Provides two storage areas, one left and one right of divider).	$209
1150-0126	Divider center bumper hose tray running side to side with adjustable track (Provides two storage areas, one ahead and one behind divider).	$209
1150-0127	Tray center of bumper with slats 34x13x16 with divider running side to side	$607
1150-0128	Notch front bumper tray for speaker/Q2B. Will reduce front hose/equipment load.	$106
1150-0129	Diamond plate lid for center hosetray. Includes chrome grab handle, rubber hood latches and gas shock.	$342
1150-0130	Black nylon cargo net on center front bumper tray.	$260
1150-0131	Extinguisher tube in front bumper extension. Location: [#LOC].	$674
1150-0132	Tray center bumper for hydraulic/cord reel.	$663
1150-0133	Diamond plate raised full lid for extended front bumper. 6" high with dual chrome grab hands, rubber hood latches and gas shocks.	$522
1150-0136	Bumper tray center of bumper with slats 16 inches deep (approx 15 inches to slats). Mount tray 1" above gravel shield.	$477
1150-0137	Diamond plate lid for center hosetray and jumpline next to tray. 5.25" high with chrome grab handle, rubber hood latch, gas shock and water stop angle if applicable.	$395
1150-0138	Bumper pan driver's side without slats 4 inches deep with strap. For use with suction strainer only.	$399
1150-0139	Nylon black strap with aluminium quick release buckle for front bumper hose tray. Strap to attach to front and rear walls of tray down low as applicable. Location: [#LOC].	$99
1150-0140	Bumper tray center of bumper with slats 14 inches deep (approx 13 inches to slats). Mount tray 1" above gravel shield.	$477
1150-0141	Bumper tray officer's side with slats 12 inches deep (approx 11 inches to slats). Mount tray 1" above gravel shield.	$477
1150-0142	Hinged diamond plate lid for center bumper tray. Includes (4) sides, 1/4 turn latch and gas shock hold open. For use with raised compts only.	$341
1150-0143	Hinged diamond plate lid for officer bumper tray. Includes (4) sides, 1/4 turn latch and gas shock hold open. For use with raised compts only.	$341
1150-0144	Diamond plate lid for center hosetray and jumpline next to tray. 8.25" high with chrome grab handle, rubber hood latch, gas shock and water stop angle if applicable.	$447
1150-0145	Single crosslay on top of the front bumper gravel shield. Tray to be "U" shape, 10" wide x 8" high x the width of the gravel shield. Vinyl cover, [#COL], with end flaps to cover crosslay, velcro along front edge, fastened along back. Requires 24" extension.	$735
1150-0146	Water stop angle. Gravel shield mounted. Requires raised lid and/or 28" bumper extension with reel trays.	$170
1150-0147	Diamond plate lid for driver, center, and officer hosetrays. 5.25" high with dual chrome grab hands, SS butterfly latches and gas shocks.	$593
1150-0149	Nylon black cargo net on sides for bumper crosslay.	$192
1150-0150	Double crosslay on top of the front bumper gravel shield. Tray to be "U" shape, approx 20" wide x 7.5" high x 90" wide. Holds 200' of 1.75" DJ (each). Includes tri-fold diamond plate cover hinged at the front. Requires seperate side cover option and 28" extension.	$1,262
1150-0151	Booster Reel Roller Assembly. Locate in front of center bumper tray.	$306
1150-0152	Hinged diamond plate lid for officer side bumper tray. Includes D-Ring latch and gas shock hold open.	$264
1150-0153	Bumper tray officer's side with slats located between front intake and frame extension. Tray to be approx 9" W (min) x 17" L x 14" D (13" to slats) to hold 25' of 5" LDH.	$399
1150-0154	Bumper tray center of bumper with slats located to rear of Q2B. Tray to be approx 34"W x 9"L x 10" deep (9" to slats).	$580
1150-0158	Bumper tray center of bumper without slats 12 inches deep.	$272
1155-0002	Winch electric front mounted Ramsey 12,000lb	$3,592
1155-0003	Winch Warn Series 8 - 8,000lb with 125' 3/8" plated cable.	$3,084
1155-0005	Winch Warn Series 12 - 12,000lb with 125' 3/8" plated cable.	$4,516
1160-0000	Bumper 10" stainless steel	$1,123
1160-0001	Bumper 12" high swept back stainless steel	$1,271
1160-0002	Bumper rein backing. For use with 10" SS or heavy duty bumpers only.	$397
1160-0008	3/16" Front Bumper Gravel Shield.	$400
1160-0012	12" Front Bumper Gravel Shield Extension.	$125
1160-0013	16" Front Bumper Gravel Shield Extension.	$241
1160-0014	20" Front Bumper Gravel Shield Extension.	$428
1160-0015	24" Front Bumper Gravel Shield Extension	$569
1160-0016	28" Front Bumper Gravel Shield Extension.	$688
1160-0020	License plate holder mounted center of front bumper.	$34
1160-0021	Number plate, removable size to fit between air horns on front bumper. Spaced out from face of bumper so plate can be removed.	$153
1160-0030	Steel tow bar located below front bumper mounted to chassis extensions for towing purposes only, painted black	$1,619
1160-0031	Notch front bumper for low "S" type front intake. Includes tray below pipe extending from cab to bumper.	$953
1160-0034	8" Front Bumper Extension.	$125
1160-0041	Heavy duty front bumper 10" high with full wrap around. To be painted job color.	$1,969
1160-0042	Heavy duty front bumper with full wrap around. To be painted 767681 EG black.	$1,969
1160-0049	License plate holder mounted officer side of front bumper.	$34
1160-0050	12" heavy duty front bumper with full wrap around. To be painted L0318EG metallic silver.	$1,969
1160-0051	3/16" Front Bumper Gravel Shield. Smooth plate painted with black Durabak.	$1,181
1160-0052	Recessed winch receiver in front bumper for model QM5000 portable winch. Includes swing down front center section of bumper for winch access, bumper reinforcement, winch enclosure, raised lid, and port winch wiring. For use on E-ONE chassis with 10" high 28" ext bumper only.	$4,274
1160-0053	14" Front Bumper Gravel Shield Extension.	$183
1160-0054	Overlay front heavy duty bumper with diamond plate panels.	$334

1160-0055	Guard straps for bumper mtd recessed Q2B - polished stainless steel.	$267
1160-0060	Dock bumpers (4) on front bumper equally spaced (as applicable).	$265
1160-0061	10" heavy duty front bumper with full wrap around. To be painted L0318EG metallic silver.	$1,969
1200-0018	"T" handle transmission selector	$1,343
1200-0020	Trans Synd synthetic transmission fluid for EVS 3000.	$525
1200-0021	Trans Synd synthetic transmission fluid for EVS 4000.	$735
1200-0059	Eng/Trans Cummins ISM 450HP/EVS4000 2007 EPA Compliant Engine	$92,810
1200-0060	Eng/Trans Cummins ISM 500HP/EVS4000 2007 EPA Compliant Engine	$94,108
1200-0062	The engine oil and transmission dip sticks to have tags. Tags to be attached to each by cable. Use colored tag to match dip stick color.	$133
1200-0063	The engine oil dipstick to have yellow handle and the transmission dipstick to have a red handle.	$189
1200-0065	Transfer Case for All Wheel Drive- single speed with front axle declutch	$8,511
1200-0083	Transmission re-programming. "D" allows trans to shift from 1st - 4th gear and "Mode" allows 5th gear.	$594
1200-0115	Polyurethane engine mounts. Cummins engines only.	$95
1200-0116	Eng/Trans Cummins ISL 450HP/EVS3000 2010 EPA compliant engine.	$82,765
1200-0124	Eng/Trans Cummins ISC 330HP/EVS3000 2010 EPA compliant engine.	$66,903
1200-0125	Eng/Trans Cummins ISL 380HP/EVS3000 2010 EPA compliant engine.	$81,034
1200-0128	Eng/Trans Cummins ISM 500HP/EVS4000 2007 EPA Compliant Engine. For use with CIIX Hush Mid Engine only.	$94,108
1200-0129	Eng/Trans Cummins ISC 380HP/EVS3000 2010 EPA compliant engine.	$68,312
1225-0005	Exhaust heat shield. Locate below compartment floor.	$162
1225-0006	Exhaust tip stainless steel for Plymovent. For exhaust extraction system.	$307
1225-0007	Exhaust Brake Silencer Donaldson Silent Partner	$836
1225-0008	Wrap exhaust with heat tape from the turbo down to the flex pipe. Visually inspect after install for tears in material. Wrap outside with wire mesh to keep material from coming off.	$733
1225-0009	Anchor plate for Nederman exhaust system. For use with standard nozzle. Ship Loose.	$227
1225-0012	Ward No Smoke Exhaust System.	$15,317
1225-0013	Tailpipe support. Locate between tailpipe and body approx 10" in from edge of body.	$464
1225-0014	Exhaust driver side custom chassis.	$541
1225-0015	Vertical exhaust officer side. This will include the vertical exhaust support.	$1,423
1225-0016	Locate exhaust end between rear of compartment ahead of wheels and ahead of forward wheel well angle at approx. 45 degrees to rear.	$209
1225-0017	Verical exhaust elbow chrome plated 90 degree. Due to high heat from 2007 emission exhaust systems, dis-coloring of exhaust end may occur after prolonged use.	$269
1250-0003	Frame 10.25 x 3.5 x .375 chassis.	$4,881
1250-0006	Frame liner 9.375 X 3.125 X .375.	$2,688
1250-0011	Rear underbody support frame.	$510
1250-0013	Main frame - 12.0x3.5x.375 with 11.125 liner and 10" step. Step frame - 10.25x3.5x.375 with 9.375 liner.	$18,687
1250-0015	Frame assembly to include 176" wheelbase and 41" framecut.	$15,887
1250-0016	Frame assembly to include 196" wheelbase and 41" framecut.	$15,887
1250-0017	Frame assembly to include 210" wheelbase and 41" framecut.	$15,887
1250-0018	Frame assembly to include 182" wheelbase and 47" framecut.	$15,887
1250-0019	Frame assembly to include 202" wheelbase and 47" framecut.	$15,887
1250-0020	Frame assembly to include 216" wheelbase and 47" framecut.	$15,887
1250-0022	Frame assembly to include 212" wheelbase and 47" framecut.	$15,887
1250-0028	Rear heavy duty underbody support frame.	$1,366
1350-0003	Fuel system 50 gallon	$1,334
1350-0005	Fuel system 65 gallons	$1,410
1350-0008	Fuel water seperator Fuel Pro 382	$610
1350-0009	Fuel line hose braided	$258
1350-0010	Fuel pick up for generator/pump. Includes hoses run to generator compartment.	$119
1350-0011	Fuel pump electric w/reprime	$369
1350-0012	Fuel shutoff valve. Location: [#LOC]	$93
1350-0013	Fuel water Racor separator to be a bottom drop out style. Shall include indicator light and audible alarm.	$643
1350-0014	Thermal control in line fuel heater	$299
1350-0023	Fuel Cooler. To be routed from the discharge side of the pump to the chassis fuel line. Cooler to be functioning when the pump is in operation.	$409
1350-0025	Fuel line hose braided. Includes re-usable fittings on both ends of the hose.	$258
1350-0026	Fuel Lines Wrapped in Thermal Loom	$767
1350-0028	Additional Fuel Sender in tank. For future use only. No wiring.	$326
1350-0029	Racor fuel separator. To allow fuel flow to primary or secondary (back-up) fuel separator. Control valve to be located in pump compartment access in walkway with labeling. Locate adjacent to primary Racor unit. Make hoses long enough to allow for relocation if necessary.	$1,004
1350-0037	Fuel system w/65 gallon stainless steel tank.	$2,477
1400-0000	Battery two 8D 1450CCA	$1,080
1400-0002	Battery four group 31 1000CCA	$884
1400-0003	Battery six group 31 1000CCA	$1,321
1400-0010	Battery six Delco 1150 Hi-Cycle 700CCA.	$1,164
1400-0011	Battery Splash Cover for ULC compliance	$265
1400-0019	Special battery jumper stud location. Jumper studs to be located [#LOC].	$312
1400-0023	Battery six Delco 1110 Hi-Cycle 750CCA.	$1,164
1400-0024	Jumper studs to be located below driver's side front corner of body (or pump module if equipped). Studs to face down with positive stud outboard.	$187
1400-0027	Additional set of jumper studs. Location: Opposite standard location.	$320
1400-0028	Battery six Optima model D31T 900CCA.	$3,082

1510-0000	Seat cavity cover	$152
1510-0035	Universal air pack bottle bracket (EA). Location: [#LOC]	$133
1510-0038	Driver seat 911 air ride.	$824
1510-0039	Driver seat to be 911 air ride with SCBA back	$980
1510-0040	Officer seat to be 911 air ride	$824
1510-0041	Officer seat 911 air ride SCBA.	$980
1510-0042	Officer seat to be 911 fixed SCBA	$800
1510-0043	Driver seat to be Bostrom air ride	$911
1510-0044	Driver seat to be Bostrom air ride with SCBA back	$1,058
1510-0045	Officer seat to be Bostrom air ride	$911
1510-0046	Officer seat to be Bostrom air ride SCBA	$1,058
1510-0047	Officer seat to be Bostrom fixed SCBA	$885
1510-0048	Driver seat to be 911 electric	$1,231
1510-0049	Driver seat to be Bostrom electric	$1,315
1510-0050	Rear facing 911 seat with SCBA driver's side	$688
1510-0051	Engine cover 911 one man bench with SCBA	$903
1510-0052	Engine cover 911 two man bench with SCBA	$1,523
1510-0053	Rear facing 911 seat with SCBA officer's side	$688
1510-0054	Rear facing Bostrom seat with SCBA driver's side	$663
1510-0055	Engine cover Bostrom one man bench with SCBA	$926
1510-0056	Engine cover Bostrom two man bench with SCBA	$1,544
1510-0057	Rear facing Bostrom seat with SCBA officer's side	$663
1510-0058	Fold down 911 seat located [#LOC]	$369
1510-0059	Fold down 911SCBA seat located [#LOC].	$816
1510-0060	Fold down Bostrom seat located [#LOC].	$369
1510-0061	Fold down Bostrom SCBA seat located [#LOC].	$767
1510-0062	Two man bench centered on rear wall with 911 SCBA backs.	$1,173
1510-0063	Two man bench centered on rear wall with Bostrom SCBA	$1,448
1510-0064	Four man bench centered on rear wall with 911 SCBA	$2,765
1510-0065	Four man bench centered on rear wall with Bostrom SCBA	$2,547
1510-0066	One man bench centered on rear wall with 911 SCBA	$954
1510-0067	One man bench centered on rear wall with Bostrom SCBA	$1,041
1510-0068	Three 911 SCBA seats rear facing, one outboard driver, one outboard officer, one centered.	$2,069
1510-0069	Three 911 SCBA seats rear facing, one outboard driver, one outboard officer, one centered for top mount enclosed cab only. The outboard seats to be angled 30 degrees inward.	$2,069
1510-0070	Three Bostrom SCBA seats rear facing, one outboard driver, one outboard officer, one centered. For top mount enclosed cab only.	$2,220
1510-0071	SEAT 911 3 RR FACING TME 30DEG	$2,220
1510-0076	Bostrom SCBA seats forward facing center of rear wall (PR). Free standing mtd on seat risers.	$1,769
1510-0078	Three individual forward facing 911 Imperial 1200 gray attendant seats with flip up bottom seat cushions. Bottom cushions to be large as possible.	$2,389
1510-0079	Rear Seat Riser Storage. Includes smooth plate doors with push-button latches and 250lbs. slide out trays- (1) each side. Compartment opening to be 17" w x 10" h and transverse side to side. Riser to be Zolatone gray.	$2,356
1510-0080	Officer seat to be 911 attendant.	$579
1510-0081	Cab occupant detection seating system. Wired to visual indicator (hazard light). Includes audible alarm. Requires multiplex electrical system.	$4,056
1510-0082	Zico Quic-Hold mechanical air pack bottle bracket for 5" bottle(ea). Model MWAB with adjustable footplate and pull release strap. Location: [#LOC]	$485
1510-0084	Officer seat to be Bostrom electric	$1,315
1510-0085	Custom logo embroidery (EA). Bostrom seats only. Requires set-up sales code.	$115
1510-0086	Embroidery set-up for Bostrom cab seats.	$599
1510-0087	Center rear wall seats to be mounted approximately 11" apart. Quest only.	$208
1510-0088	911 SCBA seats forward facing center of rear wall (PR). Free standing mtd on seat riser.	$1,847
1510-0089	Tailbone pad for jump seat(s). (Reference print #634894)	$32
1510-0090	One man bench (PR) on rear cab wall with Bostrom SCBA back. Location: driver and officer side outboard.	$1,451
1510-0091	Zico Quic-Hold mechanical air pack bottle bracket (EA). Model QLM-U-OPR with adjustable footplate and pull release. Location:[#LOC]	$586
1510-0092	Two man bench centered on rear wall with bench seat style back cushion.	$1,132
1510-0096	Officer seat Bostrom electric with SCBA back with integral seat belt.	$1,744
1510-0097	Rear facing seat driver side Bostrom with SCBA back and integral seat belt.	$742
1510-0098	Rear facing seat officer side Bostrom with SCBA back and integral seat belt.	$742
1510-0099	Rear wall seat Bostrom flip-up with SCBA back and integral seat belt. Location: [#LOC].	$1,029
1510-0100	Padded headrest for fold down jump seat (EA). Not available with rear wall windows.	$106
1510-0101	Driver and officer outboard rear facing seats mounted at 30 degree angle. Includes upper seat belt brkt adjusted to rear of cab.	$427
1510-0104	911 SCBA seat forward facing center of rear wall. Free standing mtd on seat riser.	$924
1510-0105	One man bench (PR) on rear cab wall with Seats 911 SCBA back. Location: driver and officer side outboard.	$1,176
1510-0106	911 SCBA seats forward facing rear wall (PR). Equally spaced with individual risers on rear wall.	$1,847
1510-0116	Fold-down seat located [#LOC].	$367
1510-0117	Bostrom SecureAll mechanical air pack bottle bracket (EA). Location: [#LOC]	$466
1510-0118	Flip up 911 SCBA seat located [#LOC].	$840
1510-0119	Flip up Bostrom SCBA seat located [#LOC].	$866
1510-0120	Flip up 911 attendant seat located [#LOC].	$917
1510-0121	Flip up Bostrom attendant seat located [#LOC].	$1,020
1510-0122	Fold down seat with 911 SCBA back located [#LOC].	$818

1510-0123	Fold down seat with Bostrom SCBA back located [#LOC].	$831
1510-0126	CrewGuard occupant seating detection system. Display location: [#LOC].	$3,033
1510-0127	Additional CrewGuard display. Location: [#LOC].	$240
1510-0128	FlameFighter air pack bottle bracket (EA). Model 17000 with adjustable footplate and push-button release. Location: [#LOC]	$470
1510-0129	Two man bench centered on rear wall with Bostrom SCBA backs for use with ALS provision with side access only. Includes (1) horizontally hinged door on the front of the rear bench seat for access to storage below bench.	$1,831
1510-0130	Flip up Bostrom ABTS attendant seat located [#LOC].	$952
1510-0131	Bostrom SecureAll mechanical air pack bottle bracket (EA) for bench / fold-down seat. Location: [#LOC]	$572
1510-0132	Rear Seat Riser Storage. Includes smooth plate doors with push-button latches on sides and front (access to battery charger). Side access is to SCBA storage (2) bottles. Bottles to be stored on plastic trays with vecro strapping to secure bottles with unit in motion. Side compartment openings to be 17" w x 10" h x 26" d. Front access to be a drop down door with push-button latches. Riser and doors to be cab interior color.	$2,309
1510-0133	Adjust rear facing outboard seats as far inboard as appicable next to engine cover.	$103
1510-0134	Rear wall seat Bostrom air ride Sierra non SCBA. Includes single riser. N/A with outboard rear wall seats. Storage below seat N/A. Location: [#LOC].	$1,209
1510-0135	Arm rest installed on both sides of the seat. Location: [#LOC].	$440
1510-0137	Bostrom SCBA seat forward facing center of rear wall. Free standing mtd on seat riser.	$933
1510-0138	Two man bench centered on rear wall with (1) 911 SCBA back driver and (1) bench back cushion officer.	$1,031
1510-0144	FlameFighter model 14000 air pack bottle bracket with model 39015 safety strap (EA). Location: [#LOC]	$200
1510-0146	911 AIR SCBA seats forward facing center of rear wall (PR). Free standing mtd on seat risers.	$2,654
1510-0147	911 SCBA seats forward facing rear wall (3). Equally spaced with common riser on rear wall.	$2,769
1510-0148	Rear facing 911 attendant seat driver's side.	$579
1510-0149	Rear facing 911 attendant seat officer's side.	$579
1510-0150	Two man bench centered on rear wall with (1) Bostrom SCBA back driver and (1) bench back cushion officer.	$1,305
1515-0003	Air conditioning premium ISC/ISL. Radiator mounted condenser	$7,018
1515-0004	Air Conditioning ISM/S60. Single roof top mounted condenser.	$5,587
1515-0005	Air Conditioning premium ISM/S60. Single roof top mounted condenser	$7,528
1515-0006	Air Conditioning filter kit	$229
1515-0007	Air conditioning for Typhoon only	$6,008
1515-0012	Paint air conditioning condensor job color.	$700
1515-0017	Air conditioning for the Typhoon X, CII X and Quest with Cummins ISC/ISL engine, radiator mounted condensor.	$5,834
1515-0019	Air Conditioning lines and fittings wrapped	$366
1515-0020	Well nut fasteners to attach A/C filter to overhead panel	$212
1515-0023	A/C Cutoff Switch. Install switch in cab dash to turn off A/C in rear crew area.	$51
1515-0027	Danhard cooling system for cab medical cabinet. 115v / 12v 13,500 BTU wired to battery charger recept. Includes auto transfer switch and IOTA 75A converter mounted on permanent shelf above breaker box in L1 compt. Evaporator to be cabimet mtd, condensor to be roof mtd and compressor to be frame mtd. Note: System draws up to 12 amps AC.	$5,388
1515-0028	Danhard cooling system for cab medical cabinet. 115v / 12v 13,500 BTU wired to battery charger recept. Includes auto transfer switch. Evaporator to be cabinet mtd and condensor to be roof mtd. Note: System draws up to 12 amps AC.	$5,220
1515-0029	Air conditioning for the TyphoonX, CII X and Quest with Cummins ISC or ISL, roof top mounted condensor.	$6,813
1520-0000	Cyclone II medium cab 58" CA	$49,043
1520-0001	Cyclone II long cab 67.5" CA	$54,180
1520-0002	Cyclone II extended cab 80" CA	$54,739
1520-0003	Typhoon long cab 68" CA	$32,956
1520-0004	Typhoon Medium cab 58" CA	$30,722
1520-0005	Cyclone II medium cab three door with rear door on officer's side.	$49,043
1520-0006	Cyclone II long cab three door with rear door on officer's side.	$54,180
1520-0008	Cyclone II X medium cab with 58" CA	$47,284
1520-0010	Cyclone II X long cab with 67.5" CA	$52,423
1520-0011	Cyclone II X extended cab with 80" CA	$52,982
1520-0012	Typhoon X long cab with 67.5" CA	$31,197
1520-0013	Typhoon X medium cab with 58" CA	$28,965
1520-0014	Cyclone II X medium cab with 58" CA. Includes barrier style doors. Orange County, California. Includes mounting on engine cover of customer supplied computer bracket (see engineering), cut-out in driver side overhead for customer supplied radio.	$53,835
1520-0015	Cyclone II X medium cab with ALS provision and 80" CA. Includes exterior hinged ALS doors approx 73" high.	$54,273
1520-0017	Quest long cab with 68" CA	$52,423
1520-0018	Quest medium cab with 58" CA	$47,284
1520-0019	Cyclone II X medium cab with ALS provision, barrier style doors and 80" CA. Includes exterior hinged ALS doors approx 73" high.	$54,957
1520-0020	Quest medium cab with 58" CA and barrier style doors.	$47,968
1520-0021	Typhoon X long cab with 67.5" CA. Includes barrier style doors.	$31,882
1520-0022	Cyclone II X medium cab with 58" CA. Includes barrier style doors.	$47,968
1520-0023	Cyclone II X long cab with 67.5" CA. Includes barrier style doors.	$53,108
1520-0024	Cyclone II X extended cab with 80" CA. Includes barrier style doors.	$53,665
1520-0025	Typhoon X medium cab with 58" CA. Includes barrier style doors.	$29,658
1520-0026	Quest long cab with 68" CA and barrier style doors.	$53,108
1520-0027	Quest extended cab with 80" CA.	$52,982
1520-0030	Cyclone II X Hush/Mid-Engine long cab with 67.5" C/A	$51,489
1520-0031	Cyclone II X Hush/Mid-Engine medium cab with 58" C/A.	$46,351
1520-0032	Cyclone II X Hush/Mid-Engine medium cab with 58" C/A. Includes barrier style doors.	$47,024

1520-0033	Cyclone II X Hush/Mid-Engine long cab with 67.5" C/A. Includes barrier style doors.	$52,173
1535-0002	Driver side cab wheel well medical cabinet approximately 42x22(25 Quest)x28. Includes external locking roll-up door and interior hinged door with locking push-button latch. Cabinet includes (2) adjustable shelves.	$1,799
1535-0003	Officer side cab wheel well medical cabinet approximately 42x22(25 Quest)x28. Includes external locking roll-up door and interior hinged door with locking push-button latch. Cabinet includes (2) adjustable shelves.	$1,799
1535-0004	Medical cabinet mounted on rear wall of cab 48X32X24 with a locking roll up door. Lower door opening raised to provide hand clearance.	$3,731
1535-0005	Medical cabinet mounted on rear wall of cab 48X40X20 with locking roll up door. Lower door opening raised to provide hand clearance.	$3,507
1535-0006	Medical cabinet mounted on rear wall of cab 55X32X19 with a locking roll up door. Lower door opening raised to provide hand clearance.	$2,391
1535-0007	Medical cabinet mounted on rear wall of cab 55X40X20 with a locking roll up door. Lower door opening raised to provide hand clearance.	$2,982
1535-0012	Medical cabinet mounted on the wheel well driver side of cab 45X24X21 with a locking roll up door.	$2,237
1535-0013	Medical cabinet mounted on the wheel well officer side of cab 45X24X21 with a locking roll up door.	$2,237
1535-0028	Cab medical storage cabinet(s) finish to be swirled with clear coating.	$1,064
1535-0035	Engine Compartment Light LED (EA).	$209
1535-0037	Rear cab wall medical cabinet with side access doors (one each side). Cabinet to be 50" high x 38" wide x 24" deep. Includes (2) locking roll-up doors (satin finish) and (3) adjustable shelves. Lower door openings raised to provide hand clearance.	$2,717
1535-0038	Interior medical cabinet. Locate to rear of engine cover. Cabinet to be 30" high x 38" wide x 20" deep with a locking roll up door. Includes (1) adjustable shelf.	$2,784
1535-0043	Medical cabinet mounted on rear wall of cab 48X32X24 with a locking roll up door and windows in door slats. Lower door opening raised to provide hand clearance.	$3,995
1535-0045	ALS interior - Style "A". Includes forward wall with center locking roll-up door for access from int, small compts up high ea side of ctr opening with glove box latch on driver's side compt and Medco keyed lock on officer's side, strikers high and low on ALS doors, access plts on int panel of ALS doors, approx 5"W x 17"H x 70"L backboard sleeve, two adj shelves ahead of backboard sleeve and a roll-out tray with 36" slides each side on floor.	$7,786
1535-0046	Medical cabinet mounted on rear wall of cab 60X40X23 with a locking roll up door. Lower door opening raised 12" to provide area for rear heaters. Includes lower ventilation, front access and removable sub-floor for additional access.	$2,831
1535-0047	Medical cabinet mounted on the officer side rear cab wall 55X18X12 with a locking roll up door. Lower door opening raised to provide hand clearance.	$2,255
1535-0048	Medical cabinet mounted on the driver side rear cab wall 55X18X12 with a locking roll up door. Lower door opening raised to provide hand clearance.	$2,255
1535-0049	Louvers for interior medical cabinet wall(s) to help cabinet contents to maintain cab interior temperatures. The louvers to be in four sets of three, located two high and two low. Location: [#LOC]	$154
1535-0051	Compartment rear side of cab "under riser" type. Approx 22W x 30H opening. Includes double pan hinged door and pass through to bench if equipped. Location: driver and officer side.	$1,033
1535-0052	Medical cabinet mounted on rear wall of cab 52X40X23 with a locking roll up door. Lower door opening raised 4" to provide area for radio installation. Includes lower ventilation and removable sub-floor for additional access.	$2,831
1535-0053	ALS interior - Style "B". Includes forward wall with center locking roll-up door for access from int, compts up high ea side of ctr opening with glove box latch on driver's side compt and Medco keyed lock on officer's side, strikers high and low on ALS doors, access plts on int panel of ALS doors, approx 5"W x 17"H x 70"L backboard sleeve, two adj shelves ahead of backboard sleeve and a roll-out tray with 36" slides each side on floor.	$7,996
1535-0054	Exterior access roll up doors for medical cabinets to be painted upper cab color.	$221
1535-0057	Driver side cab wheel well medical cabinet approximately 42x22(25 Quest)x28. Includes external locking pan door painted job color and interior full height hinged door with locking push-button latch. Cabinet includes (2) adjustable shelves.	$2,158
1535-0058	Medical cabinet mounted on rear wall of cab 48X42X20 with angled corners and locking roll up door. Lower door opening raised to provide hand clearance.	$3,507
1535-0059	Brace .75 x 2.75 below medical cabinet shelf	$75
1535-0060	Rear cab wall medical cabinet with side access doors (one each side). Cabinet to be 62" high x 38" wide x 24" deep. Includes (2) locking roll-up doors (satin finish) and (3) adjustable shelves. Lower door openings raised to provide hand clearance.	$2,927
1535-0061	Driver side cab wheel well medical cabinet approximately 42x22(25 Quest)x28. Includes external locking pan door painted job color and interior locking roll-up door with satin finish. Cabinet includes (2) adjustable shelves.	$2,368
1535-0062	Interior medical cabinet. Locate to rear of engine cover. Cabinet to be 30" high x 38" wide x 20" deep with a locking roll up door. Includes (1) adjustable shelf and forward facing drop down door.	$2,865
1535-0063	Officer side cab wheel well medical cabinet approximately 42x22(25 Quest)x28. Includes external locking single door painted job color and interior hinged door with locking push-button latch. Cabinet includes (2) adjustable shelves.	$2,158
1535-0064	Rear cab wall medical cabinet with side access doors (one each side). Cabinet to be 48" high x 38" wide x 24" deep. Includes (2) locking roll-up doors (satin finish) and (3) adjustable shelves. Lower door openings raised to provide hand clearance.	$2,717
1535-0066	Interior medical cabinet. Locate to lower rear of engine cover. Cabinet to be 32" high x 30" wide x 24" deep with single pan double bi-fold doors. Includes (1) vertical and (1) horizontal partition centered in the cabinet, louvered lower side walls and removable lower rear facing panel for installation of heaters.	$2,811
1535-0067	ALS - Side access. Includes compts on each side of cab, access up high each side of interior outboard with glove box latches, strikers high and low on ALS doors, access plts on int panel of ALS doors, extended cab floor and three adj shelves.	$3,105
1535-0068	Rear wall medical cabinets. Includes forward wall and (2) full height, equal width locking roll-up door compts with (3) shelves in each compt.	$8,512

1535-0069	Rear cab wall medical cabinet with side access doors (one each side). Cabinet to be 50" high x 30" wide x 24" deep. Includes (2) locking roll-up doors (satin finish) and (3) adjustable shelves. Lower door openings raised to provide hand clearance.	$2,717
1535-0070	Riser for medical cabinet. Lifts bottom of cabinet up to top of rear wall seat support. Front of riser to be closed, sides to be open. CII X / Typhoon X only.	$622
1535-0071	ALS interior - Style "A". Includes forward wall with center locking roll-up door for access from int, small compts up high ea side of ctr opening with glove box latch on driver's side compt and Medco keyed lock on officer's side, strikers high and low on ALS doors, access plts on int panel of ALS doors, approx 5"W x 17"H x 70"L backboard sleeve, two adj shelves ahead of backboard sleeve and a roll-out tray with 36" slides each side on floor. HCFD.	$16,880
1535-0072	Rear cab wall medical cabinet with side diamond plate access doors (one each side) mounted above support channel on back wall. Cabinet to be 38" high x 47.25" wide x 14" deep. Includes diamond plate doors hinged to the rear with d-ring latches and (2) adjustable shelves.	$2,717
1535-0073	Officer side cab wheel well medical cabinet approximately 42x22(25 Quest)x28. Includes external locking pan door painted job color and interior hinged full height door with locking push-button latch. Cabinet includes (2) adjustable shelves.	$2,158
1535-0074	All medical cabinet RUD in the cab to be locking with CH751 key.	$120
1535-0075	Driver side cab wheel well medical cabinet approximately 42x22(25 Quest)x28. Includes external locking roll-up door and interior hinged door with locking push-button latch. Cabinet includes (1) adjustable partition installed and (2) adjustable shelves shipped loose in the cabinet.	$1,900
1535-0076	Driver side cab wheel well medical cabinet approximately 42x22(25 Quest)x28. Includes external pan door with locking Tri-Mark latch painted job color and interior full height hinged door with locking push-button latch. Cabinet includes (2) adjustable shelves.	$2,296
1535-0077	Officer side cab wheel well medical cabinet approximately 42x22(25 Quest)x28. Includes external pan door with locking Tri-Mark latch painted job color and interior full height hinged door with locking push-button latch. Cabinet includes (2) adjustable shelves.	$2,296
1535-0078	Interior medical cabinet. Locate to rear of engine cover. Cabinet to be 25.5" high x 30" wide x 23" deep with (2) drop down doors.	$927
1535-0079	All roll-up medical cabinet doors selected on the cab to be Amdor brand.	$115
1535-0080	Officer side cab wheel well medical cabinet approximately 42x22(25 Quest)x28. Includes external locking roll-up door. Cabinet includes (2) adjustable shelves.	$1,609
1535-0081	Driver side cab wheel well medical cabinet approximately 42x22(25 Quest)x28. Includes external locking roll-up door. Cabinet includes (2) adjustable shelves.	$1,609
1535-0083	Cabinet officer side behind officer seat with a Norcold DE-0740 refrigerator. Cabinet to include a garage style roll-up door (no lighting but wired to door ajar indicator). Wire refrigerator to operate thru shore line and during transit and on scene.	$3,325
1535-0084	Full width cabinet along upper forward vista area of cab. To include two drop down doors with push-button latching. Two LED lights to be mounted in the upper area of the cabinet. Each door to wired to door adjar indicator. Final design to be discussed with customer	$3,088
1535-0085	Rear cab wall medical cabinet with side access doors (one each side). Cabinet to be 36" high x 38" wide x 24" deep. Includes (2) roll-up doors (satin finish) and (2) adjustable shelves. Lower door openings raised to provide hand clearance.	$2,717
1535-0086	Driver and officer side cab wheel well medical cabinet approximately 17x23x28. Includes internal locking vertically hinged door. Quest cabs only.	$1,209
1535-0087	Special medical cabinet on rear wall. Includes lower area ROM door with satin finish (front lower area raised 6")and lock, (1) fixed shelf and (2) adjustable (above)-All with 1" lips all the way around, upper area with drop down down with (2) non-locking push buttons, lower sides open with cargo nets, upper side officer with vertically hinged door with Medeco3 cam lock with (2) alike keys (each unit to be keyed differently). See full design in file.	$7,582
1535-0088	Riser for medical cabinet. Approx 40"W x 20"D x 17"H. Front of riser to have a drop down door with two locking latches. Finish to match medical cabinet.	$811
1535-0089	Full width cabinet along upper rearward vista area of cab. To include three (3) lift-up doors with push-button latching (hold-opens for each as size of door permits). Each opening to include one (1) ROM LED strip light mounted in the upper area of the cabinet. Each door to wired to door ajar indicator.	$3,088
1535-0091	Officer side cab wheel well medical/communication cabinet approximately 42x22(25 Quest)x28. Includes external half height locking pan door with Tri-Mark latch painted job color and interior full height opening with cargo netting. Cabinet includes (3) adjustable interior pull-out shelves.	$2,839
1535-0092	Driver side cab wheel well medical/communication cabinet approximately 42x22(25 Quest)x28. Includes external half height locking pan door with Tri-Mark latch painted job color and interior full height opening with cargo netting. Cabinet includes (3) adjustable interior (4) sided trays with 1" lips.	$2,839
1535-0093	Compartment rear side of cab "under riser" type. Approx 22W x 30H opening. Includes double pan hinged door with Tri-Mark locking latches and pass through to bench if equipped. Location: driver and officer side.	$1,170
1535-0094	Driver side cab wheel well medical cabinet approximately 42x22(25 Quest)x28. Includes external pan door with locking Tri-Mark latch painted job color and interior full height opening with cargo net cover. Cabinet includes (2) adjustable shelves.	$2,439
1535-0095	Officer side cab wheel well medical cabinet approximately 42x22(25 Quest)x28. Includes external pan door with locking Tri-Mark latch painted job color and interior full height opening with cargo net cover. Cabinet includes (2) adjustable shelves.	$2,439
1535-0096	Exterior access roll up door for medical cabinet to be painted two-tone to match cab paint break (EA).	$379
1540-0001	Map box dual storage	$488
1540-0004	Map Box Rectangular Short.	$434
1540-0005	Map Box Rectangular Tall	$459
1540-0006	Map box suspended with drop down doors.	$504
1540-0007	Map Box with Angle Storage. Angled side to face officer.	$434
1540-0008	Map box suspended with officer's map storage.	$609

1540-0014	All map boxes in the cab to be swirled with clear coat	$504
1540-0015	Map Box Suspended with Drop Down Door. Box offset to rear to allow engine access door to open further.	$504
1540-0016	Map box suspended with officer front drop down door with (4) slots and driver rear drop down door with (4) slots.	$599
1540-0017	Map box with angled top on rear engine cover	$498
1540-0020	Map box with 3 compartments on rear of engine cover. Forward compartment has angle lift-up door with gas shocks. Rear of box has top and rear compartments with hinged doors.	$1,020
1540-0021	Map box suspended 34" wide with (3) drop down doors.	$599
1540-0022	Map / medical box on rear of engine cover. Officer's side front has map box w/drop down door. Rear has two compts w/vert hinged doors. Left side includes one adj shelf.	$1,853
1540-0023	Map box suspended rear facing with drop down door. Box offset to rear to allow engine access door to open further.	$504
1540-0024	Map / medical box on rear of engine cover. Front has 2 map boxes w/3 horz slots ea and drop down doors. Rear has 2 compts w/vert hinged doors.	$2,063
1540-0025	Map box suspended with officer's map storage.	$609
1540-0026	Locking map box door. Map box door to include a locking push-button latch. Key type to be CH751.	$69
1540-0027	Map box suspended with officer front drop down door with (4) slots and driver rear drop down door with (2) slots.	$599
1540-0027	Map box suspended with officer front drop down door with (4) slots and driver rear drop down door with (2) slots.	$599
1540-0028	Map box suspended with full width lower storage and officer's map storage.	$609
1540-0030	Map Box Rectangular. Front storage area with hinged lid and push button latch, to have (3) equal storage spaces. Center mounting area. Rear storage area with hinged lid and push button latch, to have (2) equal storage spaces.	$434
1540-0031	Map Box Suspended with Drop Down Door 17H x 34W x 14D. Box offset to rear to allow engine access door to open further.	$610
1540-0032	Map box suspended with driver's map storage.	$609
1540-0033	Map Box located on rear of engine cover to be approx 45"L x 13.5" W x 11.5"D.	$1,196
1540-0034	Map box suspended 37" wide with (3) drop down doors.	$599
1540-0035	Rear engine cover rectangular map box 12H X 13.75W X 31L. Includes (3) slots driver, open center, (2) slots officer side and cargo net cover.	$841
1540-0036	Storage box with hinged top with push-button latch. Box to be mounted to rear of engine cover and to rear of map box (hinge to forward edge). Size: 27" h x 34" w x 12" d	$388
1540-0037	Map box suspended with drop down doors. 15H x 37.5W x 14D	$504
1540-0038	Storage box with sliding aluminum plate doors. The doors to be secured with a tethered push-button ball pin fastener. Box to be mounted rear facing on rear of engine cover. Size: 27" H x 34" W x 12" D outside dimensions.	$1,161
1540-0039	Map box / rear engine cover medical cabinet. Includes forward facing map box with 2 drop down doors and incorporated rear engine cover medical cabinet with roll-up door.	$3,890
1540-0040	Map box suspended with drop down doors. 34"W x 10"H x 12"D	$504
1540-0041	Map box OCFA. Located in the crew area between the wheel wells on the upper engine cover rear of the 3X3.	$889
1540-0042	Map box suspended with driver and officer front drop down door and officer rear drop down door. Includes (4) slots on officer side and map storage on driver side.	$699
1540-0045	Map box rectangular with rear hinged door. 11"L (front to rear) x 20"W (side to side) x 6"D.	$434
1540-0046	Map box binder storage approx. 13"H x 11"W x 4" front to back. Location: (1) each side on interior wall of medical cabinet walls. Includes lid with mechanical latch. To match cab interior color.	$476
1540-0047	Map box with 3 compartments on rear of engine cover. 2 compartments on top will be hinged back to back. Forward compartment has lift-up door with gas shocks. Rear of box has top and rear compartments with hinged doors. Lower compartment will be approx 7" high.	$1,020
1540-0049	Map box suspended with drop down doors. Driver door approx. 15.5"W, officer door approx. 19.5"W. 35"W x 11"H x 13.5"D. (1) vertical partition 4" off officer side, (1) shelf offset to driver side of partition.	$504
1540-0050	Storage box with hinged top and push-button latch. Box to be mounted on rear of engine cover (hinge to forward edge), angled same as upper engine cover. Size: 15"H x 35"W x 7"D. Quest cabs only.	$388
1540-0051	Map box suspended with drop down doors. 34"W x 9.50"H x 12"D.	$504
1540-0052	Auto Pulse storage box with hinged top and push-button latch. Box to be mounted on floor rear of engine cover (hinge to forward edge), angled same as lower engine cover. Size: 12"H x 44"W x 8"D(bottom)/11"D(upper).	$504
1540-0053	Rear lower engine cover mounted storage box. To be approx. 44" W x 8" H x 12" D. Includes (3) equally spaced dividers. Includes cargo net cover.	$841
1540-0054	Map box with two (2) compartments on rear of engine cover. Upper compartment to have lift-up door with one (1) hold-open and latch. Lower compartment to have drop down door with latch (accessible from the rear of the box).	$1,020
1540-0056	Rear engine cover rectangular map box angled to match upper and lower vertical engine cover. 11"H X 12"W (front to rear) X 42.5"L. Includes (6) storage slots approx. 14"L x 6"W with (3) retaining straps front to rear, (1) over each area.	$841
1540-0057	Map box suspended with driver and officer front and rear drop down doors. Includes (4) slots on each side.	$699
1540-0060	Storage box with hinged top with push-button latch. Box to be mounted to rear of engine cover and to rear of map box (hinge to forward edge). Size: 17H x 34W x 12D.	$388
1550-0001	Map pockets cab front doors diamond plate	$163
1550-0002	Map pockets cab front doors stainless steel	$134
1550-0007	All cab exterior access doors to have CH751 keyed locks.	$161
1550-0008	Fixed rear cab wall windows (pr). Not available with side mount pump module applications.	$105
1550-0009	Fixed rear cab wall narrow windows (pr).	$103
1550-0010	Sliding rear cab wall windows (pr). Windows are drop style and not available with side mount pump module applications.	$236
1550-0011	Rear crew cab door windows. Includes manual roll-down actuation. Not available with paddle style door latching.	$969
1550-0013	Driver and Officer door windows. Includes electric roll-down actuation. Each door to be individually controlled and the driver side is to have control for all electrically actuated windows.	$1,343

1550-0014	Rear crew cab door windows. Includes electric roll-down actuation. Each door to be individually controlled. Not available with paddle style door latching.	$1,343
1550-0015	Stainless steel protective trim on rear edge of cab door openings. E-One custom chassis only.	$203
1550-0017	Door panels cab stainless steel	$1,198
1550-0018	Scuff plates stainless steel (Set). Not available with paddle latches.	$94
1550-0019	Windows cab side sliding driver side	$240
1550-0022	Cab roof vent with fan (pair). Each vent switched next to vent.	$732
1550-0023	Windows rear sliding vista. Requires raised roof option	$397
1550-0024	All cab doors shall have paddle latches. Not available on rear doors with roll down windows.	$559
1550-0029	Map pockets cab rear doors diamond plate	$141
1550-0030	Map pockets cab rear doors stainless steel	$170
1550-0037	(4) Incandescent cab step area lighting. Locate each light in [#LOC]. Lights to be switched with door ajar.	$141
1550-0038	(4) LED cab step area lighting. Locate each light in [#LOC]. Lights to be switched with door ajar.	$555
1550-0039	Door mounted red incandescent flashing lights (4). Locate lights [#LOC]. Lights to be switched with door ajar.	$141
1550-0040	Door mounted red LED flashing lights (4). Locate lights [#LOC]. Lights to be switched with door ajar.	$333
1550-0041	Door mounted amber incandescent flashing lights (4). Locate lights [#LOC]. Lights to be switched with door ajar.	$141
1550-0042	Door mounted amber LED flashing lights. Locate lights [#LOC]. Lights to be switched with door ajar.	$333
1550-0047	All (4) cab doors to have double strap. Straps to be sewn together.	$133
1550-0050	All cab exterior cab locks to be keyed for #CH751 locks. Orange County.	$238
1550-0052	Federal LED Delta Ray amber/red warning lights, bottom of cab doors (interior), wired to door switches.	$1,657
1550-0053	Aluminum interior rear cab door handrails (PR) IPOS.	$297
1550-0054	All cab exterior access doors to have 1250 keyed locks.	$518
1550-0055	Door mounted Whelen red TIR6 LED flashing lights (4) w/clear lenses. Locate lights [#LOC]. Lights to be switched with door ajar.	$1,116
1550-0056	Cab door insert (ea) - Carbon fiber style. Quest cab only.	$207
1550-0057	Cab door insert (ea) - Stainless steel. Quest cab only.	$304
1550-0061	Rear crew cab door window. Includes electric roll-down actuation. Not available with paddle style door latching. For use with 3 door cab only.	$673
1550-0063	(3) LED cab step area lighting. Locate each light in [#LOC]. Lights to be switched with door ajar.	$417
1550-0066	Cab door kickplates fastened with screws.	$212
1550-0067	[#COL] chevron "V" stripe on lower cab door panel approx 18" high. Stainless steel door panels only. CIIX and TyphoonX only.	$263
1550-0069	Reflective [#COL] 3M Diamond Grade striping positioned in the "A" formation located in the lower cab door panels.	$267
1550-0070	All (4) cab doors to have double door straps. Straps to be long enough to allow the door to open to a max of 90 degrees.	$264
1550-0071	ABS cab door panels and lower kick panels to be fastened with screws. No drive rivets.	$353
1550-0072	Door panels cab alum painted Zolatone gray.	$1,198
1550-0073	[#COL] chevron "A" stripe on lower cab door panel approx 18" high. Stainless steel door panels only. CIIX and TyphoonX only.	$263
1550-0074	[#COL] chevron "A" stripe on entire lower cab door kick plate. Stainless steel or smooth plate kick plates only. CIIX and TyphoonX only.	$263
1550-0075	Door mounted red LED flashing lights (3). Locate lights [#LOC]. Lights to be switched with door ajar.	$250
1550-0077	Interior cab door locks - manual. Will be individually actuated from each respective door.	$360
1550-0078	Map pockets 14 gauge stainless steel. Includes vinyl trim around top of opening and nylon strap with snap to retain contents. Location: front cab doors.	$362
1550-0079	Rubrail Guard with endcaps for cab door strip lights.	$352
1550-0080	[#COL] chevron "A" stripe on lower cab door panel approx 12" high. Stainless steel door panels only. CIIX and TyphoonX only.	$263
1550-0081	Cab door locks - electric. Includes driver side exterior touchpad, (2) remote key fobs and manual interior lock on each door.	$1,065
1615-0000	Vista cab 20" with extension for top mount pump panel controls. Includes 4" cap for additional headroom. Delete down view window option required with full width pump module.	$9,381
1615-0001	Vista full height rear doors 12"	$3,200
1615-0002	Vista full height rear doors 16"	$3,350
1615-0003	Vista full height rear doors 20"	$3,501
1615-0013	Vista cab 20" with extension for top mount pump panel controls.	$8,960
1615-0015	Diamond plate overlay front of vista slope.	$421
1620-0000	Overlay the painted grille with stainless steel	$299
1620-0002	Stainless steel grille for Typhoon X	$793
1620-0003	Stainless steel grille for Typhoon	$793
1640-0000	Step below cab door. Located [#LOC]. Steps under Front Cab doors shall not interfere with Approach Angle.	$202
1640-0009	Steps below front cab door - CFR swing style (PR). Includes plunger stop to hold in the down position. Step to be centered below cab step.	$828
1670-0001	Ramco 6001FFR mirrors. Remote controlled with top CAS750 convex. Location:[#LOC]	$1,361
1670-0001	Ramco 6001FFR mirrors. Remote controlled with top CAS750 convex. Location:[#LOC]	$1,361
1670-0003	Velvac #2010 mirrors. Door mounted with remote control and heat.	$580
1670-0007	3" Extension for Ramco Mirrors	$141
1670-0008	4.5" Extension for Ramco Mirrors	$141
1670-0010	Pair of Retrac West Coast mirrors mounted on cab doors.	$265
1670-0013	Both cab mirrors to be heated.	$263
1670-0015	Velvac #2010 mirrors with marker light. Remote controlled and heated.	$611
1670-0017	Mirror Stainless Steel 8" Convex officer side cab brow, Bell Type Mounting, 2 Piece Adjustable Telescoping Arm. Head #983, Arm #3983	$78

1670-0018	Velvac mirrors model 2025 with LED directional arrows. Door mounted with remote control and heat.	$997
1670-0019	Ramco 6001CCR-750 mirrors. Remote controlled with bottom convex and top CAS750 convex. Location: [#LOC]	$1,450
1670-0020	Rosco mirrors w/marker lights and LED turn signals, remote, heated and convex pair.	$1,001
1670-0021	Ramco 6001FFR mirrors. Remote controlled with CAS750R top remote convex. Location: [#LOC]	$1,572
1670-0023	Mirror Stainless Steel 8" Convex driver side cab brow, Bell Type Mounting, 2 Piece Adjustable Telescoping Arm. Head #983, Arm #3983	$78
1670-0028	Rosco AccuStyle 818 door mounted mirrors. Chrome w/LED turn signals, remote, heated and convex (PR).	$1,001
1670-0030	Kenworth model MX148S wide angle mirror. Location: [#LOC].	$158
1670-0031	2" Extension for Ramco Mirrors	$141
1670-0032	Ramco 6001FFR mirrors. Remote controlled with top CAS750 convex and LED turn signals. Location: [#LOC].	$1,817
1670-0035	Ramco 6001FFR mirrors with INVUE camera. Remote controlled with top CAS750 convex. Location: [#LOC].	$2,403
1670-0036	Ramco 6001MCR mirrors with INVUE camera. Remote controlled with bottom convex. Location: [#LOC]	$2,403
1670-0038	Lang Mekra mirrors w/LED marker lights and turn signals, remote, heated and convex pair.	$1,175
1675-0001	Stainless steel trim belt on front of cab. Location:[#LOC].	$419
1675-0005	Cab roof vent with-out fan (pair).	$327
1675-0014	SCBA bottle storage two driver side of cab behind rear door with cast door.	$646
1675-0015	Cab roof mounted diamond plate 3 sided light tower shield with 45 degree front slope.	$831
1675-0016	Cab roof mounted painted job color 3 sided light tower shield with 45 degree front slope.	$1,036
1675-0020	Auto eject stainless steel scuff plate.	$81
1675-0025	SCBA bottle storage two officer side of cab behind rear door with cast door.	$646
1675-0030	Mud flaps, front, black with E-ONE logo.	$136
1675-0033	Chrome Fire Bell with Eagle. Location: Officer's side of front bumper extension.	$1,216
1675-0034	Cab driprail drain holes. The driprail just before the vista roof begins to have a drain hole provided (one each side of cab).	$74
1675-0035	Belt size tag. Install next to fluid capacity tag. Tag to provide belt sizes for all belts provided.	$90
1675-0036	Cab wheel well liners. The cab wheel well liners to be aluminum IPO ABS plastic. Paint job color.	$524
1675-0038	Sign plate smooth 30"x30" mounted on cab roof. Color: [#COL]	$208
1675-0039	Pair of 48" handrails located just behind driver and officer rear door (ALS doors if equipped) one each side.	$406
1675-0041	Stainless steel trim belt on low on sides of cab.	$1,243
1675-0042	Rear cab wall to be smooth 3/16" aluminum plate. Cab wall to be finish painted to match the cab paint scheme.	$305
1675-0043	Sliding rear window mounted above pump panel. Top mount enclosed cab.	$979
1675-0045	Hansen white LED cab handrails upgrade (EA).	$170
1675-0048	Rear cab wall to be smooth 3/16" aluminum plate with a diamond plate overlay.	$381
1675-0053	Stainless steel scuff plates full height on rear cab corners (PR)	$210
1675-0054	Sign plate smooth 18"x28" mounted one each side rear cab roof. Color: [#COL]	$414
1675-0055	Radio box 18W x 12H x 10D. Location: Centered up high of vista area recessed on the rear exterior cab wall with door hinged to the bottom.	$439
1675-0056	Stainless steel scuff plates on rear cab roof corners (PR)	$158
1675-0057	Mounting plate for battery charger receptacle and indicator - removable brushed stainless steel.	$248
1675-0058	Chrome fire bell with gold eagle. Location: Officer's side of front bumper extension.	$1,281
1675-0059	Rear cab wall to be smooth 3/16" aluminum plate with swirl plate overlay.	$628
1675-0060	Sign plate smooth 40" x 80" mounted on cab roof. Color: [#COL]	$600
1675-0061	Cab roof mounted 4 sided light tower shield painted job color.	$1,346
1675-0062	Electric chrome fire bell with eagle. Location: Driver's side of front bumper extension. Includes switch on officer side overhead console.	$1,701
1675-0065	Stainless steel roller assemblies for back of cab. (1) each side rear cab corners.	$253
1675-0066	Skid plate under each lower step. Quest cab only.	$376
1675-0067	Cab roof mounted 3 sided light tower shield painted two-tone job color.	$1,036
1675-0071	Remove side grille from wheel well areas of the cab. TyphoonX cab only.	$205
1675-0072	(4) roof mounted (welded) sign plate mounting points. Mounts to space roof sign plate off cab roof and allow for easy removal.	$241
1675-0073	Hose deflector pin to protect Q2B on front bumper extension.	$181
1675-0074	Cab roof mounted 3 sided light tower shield with welded sides and painted job color with 45 degree front slope.	$1,225
1675-0075	Cab roof mounted painted job color 3 sided light tower shield with 90 degree front slope.	$1,036
1675-0076	Cab roof mounted diamond plate 3 sided light tower shield with 90 degree front slope.	$831
1675-0077	Storage box on rear cab roof 48W x 48L x 12H with 4-sided lid painted two-tone job color (if applicable)	$1,692
1675-0078	Hansen red LED cab handrails upgrade (EA).	$170
1675-0079	Diamond plate storage box for Little Giant model 17 on rear cab vista roof. Includes drop down door with push button latches and nylatron on floor.	$1,237
1675-0080	Fixed rear cab wall narrow windows (ea). Location: driver side rear wall.	$51
1675-0081	Smooth plate sides painted job color and diamond plate top/door storage box for Little Giant model 17 on rear cab vista roof. Includes 45 degree front angle, rear backstop, partition, drop down door with push button latches and nylatron on floor.	$2,841
1675-0084	Side extensions at cab wheel wells for 4x4 application.	$733
1675-0085	Under riser half depth roll-out trays. Includes cab floor extensions. Requires riser height exterior compartments.	$1,098
1675-0086	Raised cab wheel wells for low OAH applications.	$380
1675-0087	Pair of handrails (8" driver and 18" officer) located just behind driver and officer front door.	$420
1675-0088	Fluid capacity tag to include filter model numbers for engine oil, transmission, fuel, air, hydraulic and coolant. Tire size front and rear to be included on tag.	$90
1675-0089	Radio box 18W x 12H x 10D. Location: Up high center rear wall panel offset to driver side of vista area recessed on the rear exterior cab wall with door hinged to the bottom.	$439
1675-0091	Lightbar mounting angles (PR). Position on cab roof with each angle oriented front to rear with one leg welded to cab roof leaing top horizontal surface for lightbar mounting legs.	$244

1675-0092	Number plate mounting. "Z" type extrusions welded to cab roof (upper leg facing out) to support perimeter of sign plate. Allows sign to be attached without drilling through cab roof.	$337
1680-0000	Air intake emergency shutdown. Dash mounted guarded switch	$1,420
1680-0001	Block heater 1000 watt	$447
1680-0002	Block heater 1500 watt. Available on ISM and S60 only	$457
1680-0005	Thermatic Fan Clutch	$1,595
1680-0006	Drivelines 1710	$924
1680-0007	Drivelines 1810. Required on 1550 lb/ft torque engines	$1,450
1680-0008	Tow eyes front painted below bumper / cab (PR).	$232
1680-0009	Tow eyes front stainless steel below bumper / cab (PR).	$584
1680-0010	Tow eyes front stainless steel mounted in up position. Requires 16" minimum bumper extension on custom chassis and 18" minimum bumper extension on commercial chassis.	$584
1680-0011	Tow eyes rear below body painted	$536
1680-0012	Tow eyes rear frame painted	$476
1680-0013	Tow hooks front stainless steel in down position. Requires extended bumper on commercial chassis. If Non-Extended bumper on Com Chassis, tow hooks are to be ordered with chassis.	$700
1680-0014	Tow hooks front stainless steel mounted up. Requires 12" minimum bumper extension on custom and commercial chassis.	$700
1680-0015	Trailer hitch class III mounted rear	$854
1680-0016	Exhaust end chrome plated. Due to high heat from 2007 emission exhaust systems, dis-coloring of exhaust end may occur after prolonged use.	$227
1680-0017	Hotshift PTO	$1,725
1680-0021	Exhaust end for Plymovent. For exhaust extraction system.	$237
1680-0022	Auto lube system Vogel. Chassis points only.	$3,687
1680-0033	Rear Tow Shackles (Pair)	$235
1680-0042	Tow hooks front painted in the down position.	$240
1680-0053	Storage below rear bench seat. (1) hinged door on each side of the bench seat.	$533
1680-0056	Cold Weather Pkg for Cab. Includes (2) 8" fans, fan clutch and additional insulation on the front wall.	$2,951
1680-0075	(3) way rear underbody Class III hitch receiver. Includes rearward Class III trailer receiver with tow hook eyes and electrical winch connection, (2) side facing- (1) each below rearward body compartments for portable winch receivers with electrical connection for winch.	$2,057
1680-0076	Under front bumper Class III hitch receiver. Includes electrical connection for portable winch application. Custom chassis only.	$1,622
1680-0079	Pressure Sensing Governor DDEC Engine - Required with Fire Commander	$1,184
1680-0080	Tow eyes front painted in up and down position. Tow eyes to use same holes for both sets.	$464
1680-0082	The air intake emergency cable reset. Officer side of cab below the front bumper. Locate so cable is not visible or can be pulled without reaching under the bumper.	$186
1680-0083	Cooler for steering system.	$778
1680-0086	3" tubular protective bar under rear tailboard (width of tailboard) connected to frame to provide protection. Ends of tube to be sealed.	$1,940
1680-0087	Radiator brush guard below cab.	$522
1680-0089	Chassis exhaust to exit to driver side of chassis below the forward body compartment corner.	$1,137
1680-0090	Block heater to have thermostatic controller.	$162
1680-0091	Tow eyes front stainless in up position and painted in down position. Tow eyes to use same holes for both sets.	$814
1680-0092	Tow blocks under front bumper extension.	$281
1680-0093	Tow eyes front stainless steel with 3" holes mounted in up position. Requires 16 inminimum bumper extension on custom chassis and 18 in minimum bumper extension on commercial chassis.	$789
1680-0094	Trailer hitch class IV mounted rear.	$1,561
1680-0095	Side underbody Class III hitch receivers. Includes (2) side facing- (1) each below rearward body compartments for portable winch with electrical connection for winch.	$1,372
1680-0096	Side underbody Class III hitch receivers. Includes (2) side facing- (1) each below body compartment ahead of the rear wheels for portable winch with electrical connection for winch. With this assembly the compartments will need to be notched.	$1,372
1680-0099	Block heater 1500 watt wired through inlet receptacle. Available on ISM and S60 only	$457
1680-0116	Oil pan heater. Fleetguard 22MM 150W/120V wired to shoreline.	$425
1680-0117	Special cab tilt reservoir location. Reservoir to be located in the [#LOC].	$537
1680-0118	Cold Weather Pkg for Cab. Includes fan clutch and additional insulation on the front wall.	$2,629
1680-0122	Tow eyes rear below body painted. Eyes to be on edge pointing to rear.	$536
1680-0126	Block heater 1000 watt wired through inlet receptacle.	$447
1680-0127	Block heater thermostat.	$231
1680-0130	High flow power steering pump. Includes additional cooler. Requires engineering evaluation. Not available in hot climates.	$449
1680-0136	Relocate the air governor to the steering reservoir bracket above the driver side frame rail.	$164
1680-0137	Diesel Exhaust Fluid (DEF) 10 gallon tank. Location: [#LOC].	$1,372
1680-0144	Trailer hitch class V mounted rear. This hitch has under body support.	$2,207
1680-0145	Diesel Exhaust Fluid (DEF) 5 gallon tank. Location: [#LOC].	$1,302
1680-0154	Oil pan heater. Fleetguard 22MM 150W/120V wired to block heater receptacle.	$425
1685-0001	Cab interior black. Does not include seat color.	$2,549
1685-0002	Cab interior burgundy. Does not include engine cover or seat color.	$2,549
1685-0003	Fold down computer tray bolted to engine cover on officer's side.	$658
1685-0004	Storage below rear bench seat for four SCBA bottles	$599
1685-0008	Control lanyard Y type for air horns.	$72
1685-0011	Window bars stainless steel pair for rear cab doors.	$333
1685-0026	Door Seat Riser Ovrlap drv/off for the Typhoon only.	$173
1685-0027	Heater Rear w/o Cover (PR)	$1,338

1685-0028	Heater Rear w/Cover (PR)	$1,428
1685-0038	ALS Prov w/Ext Access Drs	$3,030
1685-0039	Window bars stainless steel pair for canopy windows.	$333
1685-0056	Heater Rear w/o Cover (PR) and front heater with heat to the feet for the driver and officer	$1,338
1685-0057	Heater Rear with Cover (PR) and front heater with heat to the feet for the driver and officer	$1,428
1685-0058	Interior cab access panel. Driver side of cab for access to rear of shore line receptacle. Panel to be 8" x 8".	$270
1685-0059	Locking seat riser door. Driver and officer seat riser doors are to include a locking push-button latch. Key type to be 1250.	$133
1685-0060	Louvers in rear bench seat riser. For ventilation.	$138
1685-0060	Louvers in rear bench seat riser. For ventilation.	$138
1685-0061	Interior cab access panel. Officer side of cab for access to rear of shore line receptacle. Panel to be 8" x 8".	$270
1685-0063	Medical glove box. Mount to rear area of engine cover. Includes slotted top for dispensing gloves without opening hinged lid. Box to be same color as interior of cab. Secure lid in closed position with small butterfly latch.	$223
1685-0064	Embossed diamond plate foot plates located at driver, officer and rear facing seat positions where feet would rest while seated.	$250
1685-0066	Officer seat riser storage compartment door to be on front of riser hinged towards engine cover.	$156
1685-0068	Rear engine cover diamond plate trim.	$192
1685-0069	Hinged interior cab gauge panel in front of driver. Includes (9) gauges- English dominant. Panel to be hinged for access to driver gauge cluster.	$1,897
1685-0074	Communications cabinets (3/16"). 20.5"W x 16"H x 20"D INT (PR). Includes (2) roll out trays and vertically hinged door (3/16") with thumb latch. Location: One each side over cab wheel wells. Includes a smooth plate cover with matching cab finish for customer installed wiring between towers.	$2,323
1685-0075	Removable ABS panel 35"H x 4.5"W for officer side cab wall to route communication wires from officer side communication cabinet to officer side dash area. Panel to be attached with screws.	$98
1685-0078	Kick Plate in front of the officer to be diamond plate.	$127
1685-0080	Embossed diamond plate foot plates located at driver, officer and forward facing rear seat positions where feet would rest while seated.	$313
1685-0084	3/16" Aluminum plate on top engine access door. To have swirl finish and be spaced up approx 1/2".	$223
1685-0085	Center cab dash electrical panel to be held in place with coin slot style fasteners.	$81
1685-0086	Stainless steel scuff plate under interior canopy window.	$296
1685-0087	Rear engine cover radio cabinet. Cabinet to have access from the top and from rear with swirl and clear coat finish.	$1,102
1685-0088	Removable ABS panel 35"H x 4.5"W for driver side cab wall to route communication wires from driver side communication cabinet to driver side dash area. Panel to be attached with screws.	$98
1685-0089	Louvers for officers seat riser. Locate louvers in the front, side and door of riser.	$303
1685-0090	Rear cab headliner to be six pieces IPOS.	$230
1685-0091	Mount customer supplied computer tray on engine cover. Includes support plates on the top and bottom.	$200
1685-0092	Mount (2) intermediate steps to be bolted-on (one each side) inside the front driver and officer cab step well drawing # 672433 and 672434.	$166
1685-0093	Black rubber handrail mounted parallel to seats on rear of engine cover for driver and officer rear facing seats.	$160
1685-0094	Storage below rear bench seat. (1) horizontally hinged door on the front of the rear bench seat.	$385
1685-0095	Locking rear seat riser door (PR). Seat riser doors are to include a locking push-button latch. Key type to be 1250.	$133
1685-0101	Rear engine cover radio cabinet. Cabinet to have access from the top and from rear with OTO finish.	$599
1685-0105	Sun visor strap (PR) with snap fasteners.	$124
1685-0106	Rear engine cover radio cabinet. Cabinet to have access from the top and from rear.	$599
1685-0107	Interior grab handle rubber covered (2). Locate one each side at interior of rear cab door opening (at rear of opening).	$184
1685-0108	Locking seat riser door. Driver and officer seat riser doors are to include a locking push-button latch. Key type to be CH-751.	$69
1685-0109	Locking rear seat riser door (PR). Seat riser doors are to include a locking push-button latch. Key type to be CH-751.	$69
1685-0110	Storage below rear bench seat for two SCBA bottles (one each side).	$599
1685-0111	Rear cab interior wall overlay with swirl and clear coat finish.	$604
1685-0112	Integrated Roll Sensor (IRS) for RollTek air bag system.	$1,946
1685-0113	Integrated roll sensor slave module for RollTek air bag system.	$904
1685-0114	Integrated Head Curtain (IHC) for RollTek air bag system.	$545
1685-0115	Integrated Belt Pretensioner (IBP) for RollTek air bag system.	$316
1685-0116	Interior grab handle rubber covered (2). Locate one each side at interior of front cab door opening (at rear of opening).	$184
1685-0117	Rear cab interior wall overlay with Zolatone finish.	$393
1685-0118	Pump operator panel on rear wall of cab. For use with Class 1 TME pump panel. Final design to be determined by E-ONE Applications and Chassis Engineering and with Class 1.	$1,840
1685-0119	3/16" Aluminum plate on top engine cover forward of access door. To have swirl finish and be spaced up approx 1/2".	$223
1685-0120	Rear cab interior wall overlay with diamond plate finish.	$495
1685-0121	Flat bar (.5" x 2") installed on rear cab wall up high with full length shelf track.	$277
1685-0126	SCBA Storage tubes (4) horizontally mtd (2) each side in lower rear cab compartments above floor level.	$699
1685-0127	Locate rear cab heaters below front of rear wall seat riser(s). Includes louvers on each side facing riser panel.	$327
1685-0131	Reinforcement plate(s) behind lower rear cab wall padding. TME only.	$515
1685-0134	Embossed diamond plate foot plates located at each seating position where feet would rest while seated.	$250
1685-0135	Hot climate insulation package. Includes insulation for ceiling, front wall, rear wall, side walls, below seat risers, and in doors.	$2,054

1685-0136	Storage in rear wall free standing seat riser. (1) horizontally hinged door on the front of the free standing seat riser.	$297
1685-0137	Console Remote Control Panel Officer SIde for remote control Bumper Turret, and Portable Pump Control.	$752
1685-0138	3/16" Aluminum plate on top engine cover forward of access door. Finish to match cab interior and be spaced up approx 1/2".	$223
1685-0139	3/16" Aluminum plate on top engine access door. Finish to match cab interior and be spaced up approx 1/2".	$223
1685-0146	Extended electrical access panel in cab. Panel to extend up to allow for radio/equipment installation.	$516
1685-0147	Narrow rear cab wall support channel. Not available with rear wall seating.	$190
1685-0153	Storage below rear bench seat. (2) horizontally hinged doors on the front of the rear bench seat.	$770
1685-0154	Communications cabinets (3/16"). 20.5"W x 16"H x 20"D INT (PR). Includes (2) roll out trays and cargo netting over openings. Location: One each side over cab wheel wells. Includes a smooth plate cover with matching cab finish for customer installed wiring between towers.	$2,323
1685-0155	Cold climate insulation package. Includes insulation for ceiling, front wall, rear wall, side walls, below seat risers, and in doors.	$2,054
1685-0156	Command desk, rear engine cover 5"H x 17"D x full width between medical cabinets. Desk to include hinged aluminum lid with lexan overlay and gas shock, trigger latches, 1" return lip on lid and 1" back splash. Desk to be mounted 26" off of floor with finish to match cab interior.	$1,948
1685-0157	Dash label "Switch Compression Brake Off for Wet or Slippery Road Conditions".	$41
1700-0001	Alternator Leece Neville dual 270amp. 480 amp NFPA/540 amp SAE rating. Available only on Detroit EGR Series 60 engines.	$3,349
1700-0002	Alternator Niehoff 250amp. (250 amp SAE/240 NFPA rating). Not available on Cummins ISC or Detroit Diesel engines.	$2,156
1700-0003	Alternator Leece Neville. (270 amp SAE/240 NFPA rating).	$1,830
1700-0004	Alternator Niehoff 290 amp (290 amp SAE/265 NFPA rating). Not available on Cummins ISC, ISL or Detroit Diesel engines.	$3,285
1700-0005	Alternator Leece Neville 320amp. 320 Amp SAE/275 NFPA Neville	$2,846
1700-0006	Alternator Niehoff 400amp (400 Amp SAE/385 NFPA rating). Cyclone II w/Cummins ISM. Not available on Detroit Diesel Engines Recycle requires Eng. Review.	$4,983
1700-0008	Alternator Leece Neville dual 320amp. 560 amp NFPA/540 amp SAE rating. Available only on Detroit EGR Series 60 engines.	$4,606
1700-0009	Alternator Niehoff 300 amp (300 amp SAE/270 NFPA rating). Detroit Diesel S60 engine w/EGR only.	$2,849
1700-0010	Noise filter for Leece Neville alternator.	$184
1700-0011	Alternator Niehoff 340 amp. Not available on Cummins ISC, ISL or Detroit Diesel engines.	$3,866
1750-0000	Ammeter gauge in cab 0-300amp	$278
1750-0001	Dome lights clear large one for each cab door.	$123
1750-0002	Dome lights red large one driver side one officer side	$123
1750-0004	Dome lights red large one driver side one officer side rear of cab	$123
1750-0006	Map light flexible arm. Located [#LOC]	$173
1750-0008	Radio AM/FM cassette with weather band located [#LOC]	$457
1750-0009	Radio AM/FM CD with weather band located [#LOC]	$700
1750-0010	Radio speakers additional pair. Locate each side rear cab ceiling.	$236
1750-0011	Speedometer officer's side overhead.	$268
1750-0012	Swivel reading lamps (PR) overhead between driver and officer. Lights to be individually switched.	$93
1750-0013	Turn signal Whelen 600 LED arrow amber pair located [#LOC]	$556
1750-0015	Windshield fans 8" pair. Location:[#LOC]	$324
1750-0016	Pump hourmeter in cab.	$115
1750-0018	Battery charger Super Smart 20 AMP with 120V Kussmaul air compressor.	$1,398
1750-0019	Battery charger Super Smart 110 volt, 20 amp.	$362
1750-0021	Battery charger Kussmaul model 1200, 40 amp	$609
1750-0022	Battery charger Kussmaul 40 amp model 1200 with air compressor.	$2,057
1750-0024	Auto eject receptacle inlet 20amp located [#LOC] with a [#COL] cover.	$495
1750-0025	Auto eject receptacle inlet 30amp 120v located [#LOC] and with a [#COL] cover.	$724
1750-0026	Clamshell controller mounted on officer's side of engine cover for the air horns.	$106
1750-0027	Control push button switch officer dash for Q2B siren	$81
1750-0029	Switch horn button two position DOT/air horn	$85
1750-0030	Switch horn button two position DOT/electronic siren	$85
1750-0031	Switch horn button two position DOT/Q2B	$85
1750-0032	Switch horn button three position DOT/air horn/electronic siren	$174
1750-0033	Switch horn button three position DOT/air horn/Q2B	$174
1750-0034	Switch additional 12 volt/15amp. Location and function: [#LOC].	$174
1750-0035	Cornering light relay circuits for lights on sides of cab and / or bumper. Includes (2) relays. Requires scene light option. Interlocked with park brake.	$354
1750-0039	Mrkr Pkg Chas LEDTrklt-Pmp/Res	$476
1750-0042	Sw Horn Button 3Pos DOT/ES/Q2B	$174
1750-0047	The chassis shall be pre wired for dealer installation of On-Spot tire chains.	$367
1750-0048	Round clear incandescent light mounted in the [#LOC] door.	$29
1750-0049	Round red incandescent light mounted in the [#LOC] door.	$29
1750-0050	Round amber incandescent light mounted in the [#LOC] door.	$29
1750-0052	Round clear LED light mounted in the [#LOC] door.	$141
1750-0053	Round red LED light mounted in the [#LOC] door.	$51
1750-0054	Round amber LED light mounted in the [#LOC] door.	$51
1750-0059	Receptacle inlet 20amp with a [#COL] cover. Location: [#LOC]	$249
1750-0060	Auto transfer switch 120 volt. Includes 8 place breaker box. Allows interior receptacles to be powered by either shore power or generator.	$657
1750-0061	Control push button switch officer dash for air horns	$81

1750-0062	Control push button switch officer dash for siren	$81
1750-0063	Clamshell controller mounted on on officer's side of engine cover for Q2B.	$106
1750-0064	Clamshell controller mounted on on officer's side of engine cover for electronic siren.	$106
1750-0065	Turn signal Whelen 600 halogen amber pair located [#LOC]	$244
1750-0066	Halogen front turn signal amber (PR). Locate: [#LOC]	$237
1750-0071	Mount customer supplied antenna on cab roof. Location: [#LOC]	$149
1750-0072	12 volt electrical outlet in the cab wired battery hot. Location: [#LOC].	$50
1750-0073	Antenna base Tessco P/N 90942 (NMO Motorola Style - also called MATM style) on cab roof. Location: [#LOC].	$80
1750-0074	Interlock to position front intake for cab tilting.	$238
1750-0075	English dominant main cab gauge cluster.	$1,760
1750-0076	Metric dominant main cab gauge cluster.	$1,864
1750-0077	Turn signal Code 3 model 65 LED amber with arrow insert (PR). Location: [#LOC].	$621
1750-0078	Light Whelen model PSR00FRR LED (4) red. Horizontally mounted flashing strip light on each of the inside lower cab door panels. Wire through door switch.	$683
1750-0079	Fuel gauge for officer.	$216
1750-0080	Conduit flexible 1.5" for radio installation center of dash to compartment under officer's seat.	$259
1750-0082	12V power distribution module. Includes (6) battery hot and (6) switched hot circuits. 100 amps max (IATS). Location: [#LOC]	$268
1750-0083	Turn signal Federal Signal QuadraFlare QL64Z-ARROW LED amber pair located [#LOC]	$237
1750-0088	Whelen 500 LED red door ajar light. Model 50R00FRR light with 5FLANGEC flange.	$161
1750-0090	Light Whelen LED strip model PSCACCCR to illuminate cab floor. Horizontally mounted on seat riser. Wire through door switch. Location: [#LOC]	$295
1750-0091	Battery Saver Kussmaul model 091-35-HO wired to battery charger receptacle.	$601
1750-0095	Second DOT traffic horn	$113
1750-0096	Bracket for Motorola Spectra Radio in the center overhead console offset to officer side. Dim: 7"W x 2"H, must be size of the opening after break.	$69
1750-0097	LED Light in cab to Illuminate Pump Shifter and shall activate with the headlights.	$42
1750-0098	Dome Lts Red/White Weldon with Euro style switches. Package includes two lights mounted in the front and two mounted in the rear of the cab. White light wired through master battery switch, door ajar and light assembly mounted switch. Red light through light assembly mounted switch.	$484
1750-0108	Seat belt detection system programmed to 2" red door ajar light and ES-Key display. Also tied to a "different sounding alarm".	$527
1750-0111	Digital voltmeter in cab. Location: Driver side overhead console.	$293
1750-0114	Cab Headlights in addition to front quad headlights	$371
1750-0115	Master warning light switch to have a red cover (or bezel).	$32
1750-0117	Auto eject receptacle inlet 15 amp 250 volt with a [#COL] cover. Location: [#LOC]	$452
1750-0118	Flexible 2" conduit with connectors. Location: Officer cab dash to bottom of medical cabinet.	$317
1750-0119	Flexible 2" conduit with connectors. Location: Center cab dash to rear bench seat riser.	$276
1750-0121	Ammeter gauge in cab 0-400amp Cruz Pro digital.	$416
1750-0122	Additional dome lts red/white 4" LED (PR) located one each side over enclosed TM pump panel. White light wired through door and light assembly mounted rocker switch. Red light through light assembly mounted rocker switch.	$655
1750-0123	Auto eject receptacle inlet 15amp location or function [#LOC] and the color shall be [#COL].	$449
1750-0124	Whelen 4" round LED red door ajar light. Model 20R00FCR light with 2FLANGEC bezel.	$161
1750-0125	Block heater receptacle 15amp with a [#COL] cover. Location [#LOC].	$249
1750-0126	Conduit flexible 1.5" for radio installation center of dash to area behind officer's seat.	$259
1750-0129	Door adjar alarm to be a chime versus an alarm.	$186
1750-0131	Pyrometer gauge in cab.	$494
1750-0132	Auto transfer switch for additional battery charge receptacle.	$397
1750-0133	Conduit flexible 1.5" for radio installation center of dash to rear bench seat.	$259
1750-0134	Conduit flexible 1.5" for radio installation rear bench seat to pump panel.	$398
1750-0135	35 AMP inline fuse as hot lead for radio installation. Radio circuit with G30060-1CR in-line fuse 35 amp. Fuse wired to ignition side to power the radio head. To be labeled and identified as "HOT". In-line fuse to be clearly labeled. Stub out under the center of overhead also provide ground wire and label wires. Label ground "Chassis Ground". Fuse to be down line from standard fuse and accessible for Motorola Spectra 800 MHz radio.	$487
1750-0138	Work lights to be programmed "on" when park brake is set and switched in overhead console.	$106
1750-0140	Mount customer supplied antenna(s) on cab roof. Location(s): (1) each side of A/C condensor and (1) GPS antenna located top of vista officer side front corner. Includes coaxial cable terminating in the rear bench seat riser.	$149
1750-0142	Kussmual Auto-Eject 20 on each side of for charger and block heater with a Red cover. Auto-eject on each side of cab to alow plug in on either side for battery charger and block heater with transfer switch in cab.	$1,300
1750-0144	Q2B brake switch to have a red cover (or bezel).	$32
1750-0145	Relocate the battery charger and (if applicable) air compressor to below the rear wall bench seat or rear center wall medical cabinet (if equipped).	$479
1750-0148	Turn signal Whelen 700 LED Chevron amber (PR). Locate [#LOC].	$581
1750-0149	Control push button switch officer dash for Q2B siren brake.	$81
1750-0150	Block heater receptacle 20amp auto eject with a [#COL] cover. Location [#LOC].	$495
1750-0151	Receptacle inlet 15amp with a [#COL] cover. Location: [#LOC]	$249
1750-0154	Cab keyless entry touch pad(s) to lock/unlock all cab doors and cab/body electric locking roll-up door(s).	$502
1750-0155	Secondary keyless entry touch pad on officer side of cab. Pad to include any and all functions provided by the driver side pad.	$407
1750-0156	Special EQ2B power amplifier location. Amp to be located [#LOC].	$239
1750-0157	Special battery charger location. Charger to be located [#LOC].	$239

1750-0158	Dome Lts Red/White LED. Package includes two lights mounted in the front and two mounted in the rear of the cab. White light wire through door and light assembly switch. Red light through light assembly switch.	$700
1750-0159	3 Position Q2B momentary switch (activate/off/brake). Loc: [#LOC].	$174
1750-0160	Dome Lts Red/White Incandescent. Package includes two lights mounted in the front and two mounted in the rear of the cab. Front cab lights: White light wired through door and light assembly mounted switch. Red light through light assembly mounted switch. Rear cab lights: White light wired through door and switch on side cab interior wall. Red light through switch on side cab interior wall. Rear dome switches to be located between side window and door opening and control light on respective side of cab.	$829
1750-0161	Air compressor, Kussmaul model 091-9B-1 120V.	$848
1750-0162	Battery charger Kussmaul model 091-35/10, 35 amp battery charger / 10 amp battery saver.	$711
1750-0163	Speedometer officer's side swtch panel.	$268
1750-0164	Fuel gauge for officer. Location: officer switch panel.	$216
1750-0165	Conduit flexible 1.5" for radio installation center of dash to compartment under driver's seat.	$259
1750-0166	ATC Override switch.	$174
1750-0167	Block heater to be wired to battery charger receptacle with a lighted on/off switch behind driver seat.	$173
1750-0168	Dome Lts Red/White 4" incandescent (5). Lights to be located two front and three rear. White light wired through door and light assembly mounted rocker switch. Red light through light assembly mounted rocker switch.	$631
1750-0169	Radio speakers (3). Locate officer ceiling and each side rear cab ceiling. Wiring to terminate in officer side overhead console for customer supplied radio(s).	$405
1750-0171	Clamshell controller mounted on on driver's side of engine cover for Q2B.	$106
1750-0172	Special battery charger and air compressor location. Charger and air compressor to be located [#LOC].	$239
1750-0173	Rocker switch cover (or bezel) to be red. Location: [#LOC].	$32
1750-0174	Battery Charger Professional Mariner. Located outside driver side door area. The charger to be mounted under rear bench seat riser (centered) .	$1,207
1750-0176	Light Whelen model 70RA6FCR Super LED (4) split red/amber with chrome flanges. Horizontally mounted flashing lights on each of the interior cab door panels outboard mounted. Wire through door switch.	$1,396
1750-0177	Receptacle inlet 30amp twist lock with a [#COL] cover. Location: [#LOC].	$479
1750-0178	Windshield fan 8". Location: rear facing mounted on driver side 3x3 post.	$162
1750-0185	Vernier engine throttle in cab for use with jet dump operations. Locate in driver side overhead console or Lower Dash. Includes selector sw also in overhead console or Lower Dash.	$787
1750-0186	Dome Lts Red/White Incandescent additional. White light wire through door and light assembly mounted switch. Red light through light assembly mounted switch. Location: Centered rear of cab.	$123
1750-0187	Auto drain, Kussmaul model 091-9-089 120V. For use with air compressor 091-9B-1 only.	$178
1750-0188	DPF Regeneration override switch.	$174
1750-0189	Gauge ambient temperature with digital display. Locate display on officer side switch panel.	$716
1750-0191	Cab quad headlights below front bumper in addition to standard headlights.	$441
1750-0194	Dome Lts Red/White LED additional (PR). White light wire through door and light assembly switch. Red light through light assembly switch. Location: Rear crew area.	$351
1750-0195	Cab dome lts red/white (2 red/white, 2 white) 4" incandescent. White light wired thru door and light assembly mounted rocker switch. Red light thru light assembly mounted rocker switch. Red/white located in front of cab, white located at rear cab doors.	$504
1750-0196	Battery charger Newmar model PT-80, 80amp.	$3,050
1750-0197	Clamshell controller mounted on driver's side of engine cover for the air horns.	$106
1750-0200	Whelen model 1510R red strobe hazard warning light. Locate in cab under over head console.	$233
1750-0205	Handheld flashlight, orange Streamlight Vulcan flashlight with vehicle mount system. Location: [#LOC].	$220
1750-0206	Clamshell controller mounted on on officer's side cab dash for Q2B and air horns.	$106
1750-0207	Lovered cover for battery charger or air compressor (EA). Finish to match cab interior.	$166
1750-0208	Light Whelen model PSA00FAR LED (4) amber. Horizontally mounted flashing strip light on each of the interior lower cab door panels outboard. Wire through door switch.	$683
1750-0209	Clamshell controller mounted on on officer's side of engine cover (knee height) for Q2B.	$106
1750-0210	Vernier engine throttle in cab for pump&roll operations. Locate in console or Lower Dash. Includes selector sw also in center console or Lower Dash.	$787
1750-0214	Mount customer supplied GPS antenna on cab roof. Location: [#LOC].	$149
1750-0215	Turn signal Whelen M6 LED arrow amber pair located [#LOC].	$562
1800-0000	Cooling system for 2004 compliant engines, Typhoon only.	$5,330
1800-0001	Cooling for EGR engines. Includes charge air cooler.	$5,523
1800-0003	Coolant System Overflow Recovery System, CRS-150	$478
1800-0005	Cooling system for use with Cyclone II X, Typhoon X, and Quest chassis. Includes coolant recovery system.	$5,523
1800-0006	Remote coolant filter for Engine Cooling System (Cummins ISC and ISL Engines Only)	$472
1800-0013	Cooling system for use with Cyclone II X, Typhoon X, and Quest chassis. For use with 2010 EPA engines. Includes coolant recovery system.	$6,223
1800-0014	Cooling system for use with Cyclone II X Hush Mid Engine chassis. Includes coolant recovery system.	$11,952
3000	**BODY**	
3100-0000	Driver side body with full height 24" wide forward and 36" wide rearward compartmentation. Includes (1) 56" wide compartment over the wheel well.	$7,424
3100-0001	Driver side body with full height 30" wide forward and 36" wide rearward compartmentation. Includes (1) 56" wide compartment over the wheel well.	$7,943
3100-0002	Driver side body with full height 36" wide forward and 36" wide rearward compartmentation. Includes (1) 56" wide compartment over the wheel well.	$8,508
3100-0003	Driver side body with full height 42" wide forward and 42" wide rearward compartmentation. Includes (1) 56" wide compartment over the wheel well.	$9,094
3100-0004	Driver side body with full height 48" wide forward and 48" wide rearward compartmentation. Includes (1) 56" wide compartment over the wheel well.	$9,730

3100-0006	Driver side body with upper and lower compartmentation. Includes 24" wide forward and 36" wide rearward lower compartments and (3) opening upper compartments.	$7,795
3100-0007	Driver side body with upper and lower compartmentation. Includes 30" wide forward and 36" wide rearward lower compartments and (3) opening upper compartments.	$8,313
3100-0008	Driver side body with upper and lower compartmentation. Includes 36" wide forward and 36" wide rearward lower compartments and (3) opening upper compartments.	$8,869
3100-0009	Driver side body with upper and lower compartmentation. Includes 42" wide forward and 42" wide rearward lower compartments and (3) opening upper compartments.	$9,465
3100-0010	Driver side body with upper and lower compartmentation. Includes 48" wide forward and 48" wide rearward lower compartments and (3) opening upper compartments.	$10,100
3100-0011	Driver side body with upper and lower compartmentation. Includes 42" wide forward and 42" wide rearward lower compartments, (3) opening upper compartments with portable water tank storage with access door at rear.	$9,747
3100-0012	Driver side body with upper and lower compartmentation. Includes 48" wide forward and 48" wide rearward lower compartments, (3) opening upper compartments with portable water tank storage with access door at rear.	$10,403
3100-0013	Driver side body with full height 24" wide forward and 50" wide rearward extended compartmentation. Includes (1) 56" wide compartment over the wheel well.	$7,943
3100-0014	Driver side body with full height 30" wide forward and 50" wide rearward extended compartmentation. Includes (1) 56" wide compartment over the wheel well.	$8,464
3100-0015	Driver side body with full height 36" wide forward and 50" wide rearward extended compartmentation. Includes (1) 56" wide compartment over the wheel well.	$9,017
3100-0016	Driver side body with full height 42" wide forward and 56" wide rearward extended compartmentation. Includes (1) 56" wide compartment over the wheel well.	$9,613
3100-0017	Driver side body with full height 48" wide forward and 62" wide rearward extended compartmentation. Includes (1) 56" wide compartment over the wheel well.	$10,249
3100-0018	Driver side body with full height 24" wide forward and 50" wide rearward enhanced extended compartmentation. Includes (1) 56" wide compartment over the wheel well.	$8,181
3100-0019	Driver side body with full height 30" wide forward and 50" wide rearward enhanced extended compartmentation. Includes (1) 56" wide compartment over the wheel well.	$8,700
3100-0020	Driver side body with full height 36" wide forward and 50" wide rearward enhanced extended compartmentation. Includes (1) 56" wide compartment over the wheel well.	$9,255
3100-0021	Driver side body with full height 42" wide forward and 56" wide rearward enhanced extended compartmentation. Includes (1) 56" wide compartment over the wheel well.	$9,851
3100-0022	Driver side body with full height 48" wide forward and 62" wide rearward enhanced extended compartmentation. Includes (1) 56" wide compartment over the wheel well.	$10,487
3100-0024	Driver side body with full height 36" wide forward and 36" wide rearward compartmentation. Includes (1) 56" wide compartment over the wheel well.	$9,094
3100-0025	Driver side body with full height 42" wide forward and 42" wide rearward compartmentation. Includes (1) 56" wide compartment over the wheel well.	$9,730
3100-0026	Driver side body with full height 48" wide forward and 48" wide rearward compartmentation. Includes (1) 56" wide compartment over the wheel well.	$10,410
3100-0049	Driver side body with full height 24" wide forward and 36" wide rearward compartmentation. Includes (1) 56" wide compartment over the wheel well and 30 degree angle of departure.	$7,711
3100-0050	Driver side body with full height 30" wide forward and 36" wide rearward compartmentation. Includes (1) 56" wide compartment over the wheel well and 30 degree angle of departure.	$8,230
3100-0051	Driver side body with full height 36" wide forward and 36" wide rearward compartmentation. Includes (1) 56" wide compartment over the wheel well and 30 degree angle of departure.	$8,786
3100-0052	Officer half side body with 24" wide forward and 36" wide rearward compartmentation. Includes adjustable ladder tracks.	$4,000
3100-0053	Officer half side body with 30" wide forward and 36" wide rearward compartmentation. Includes adjustable ladder tracks.	$4,000
3100-0054	Stainless steel driver side body with full height 36" wide forward and 48" wide rearward compartmentation (interior). Includes (1) 60" wide compartment over the wheel well.	$9,348
3100-0055	Stainless steel driver side body with full height 48" wide forward and 48" wide rearward compartmentation (interior). Includes (1) 60" wide compartment over the wheel well.	$10,702
3100-0056	Stainless steel driver side body with full height 60" wide forward and 60" wide rearward compartmentation (interior). Includes (1) 60" wide compartment over the wheel well.	$11,452
3100-0059	Stainless steel driver side body with full height 48" wide forward and 60" wide rearward compartmentation (interior). Includes (1) 60" wide compartment over the wheel well.	$11,238
3100-0060	Stainless Steel officer half side body with 36" wide forward and 48" wide rearward compartmentation (interior). Includes adjustable ladder tracks.	$4,676
3100-0067	Driver side body with upper and lower compartmentation. Includes 60" wide forward and 42" wide rearward lower compartments and (3) opening upper compartments.	$10,807
3100-0068	Driver side body with upper and lower compartmentation. Includes 60" wide forward and 42" wide rearward lower compartments, (3) opening upper compartments with portable water tank storage with access door at rear.	$11,106
3100-0069	Driver side body with full height 60" wide forward and 42" wide rearward compartmentation. Includes (1) 56" wide compartment over the wheel well.	$10,410
3100-0074	Driver side body with full height 36" wide rearward compartmentation. Includes (1) 56" wide compartment over the wheel well.	$6,937
3100-0075	Driver side body with full height 36" wide rearward compartmentation. Includes (1) 56" wide compartment over the wheel well and 30 degree angle of departure.	$7,225
3100-0076	Stainless steel driver side body with full height 36" wide forward and 48" wide rearward compartmentation (interior). Includes (1) 60" wide compartment over the wheel well.	$9,348

3100-0077	Stainless steel driver side body with full height 48" wide forward and 48" wide rearward compartmentation (interior). Includes (1) 60" wide compartment over the wheel well.	$10,702
3100-0078	Stainless steel driver side body with full height 60" wide forward and 60" wide rearward compartmentation (interior). Includes (1) 60" wide compartment over the wheel well.	$11,452
3100-0079	Driver side body with full height 54" wide forward and 60" wide rearward compartmentation. Includes (1) 56" wide compartment over the wheel well. The compartment behind the wheel well has upper area for RM pump panel mounting.	$15,108
3100-0080	Driver side body with full height 48" wide forward and 60" wide rearward compartmentation (interior). Includes (1) 60" wide compartment over the wheel well.	$11,238
3100-0082	Stainless steel driver side body with full height 24" wide forward and 48" wide rearward compartmentation (interior). Includes (1) 60" wide compartment over the wheel well.	$7,995
3100-0084	Stainless steel driver side body with full height 24" wide forward and 48" wide rearward compartmentation (interior). Includes (1) 60" wide compartment over the wheel well.	$7,995
3100-0085	Driver half side body with 24" wide forward and 36" wide rearward compartmentation.	$3,712
3100-0089	Driver half side body with 42" wide forward and 42" wide rearward compartmentation.	$4,547
3100-0091	Driver side body with full height 60" wide forward and 56" wide rearward compartmentation. Includes (1) 56" wide compartment over the wheel well.	$11,140
3100-0092	Driver side body with full height 50" wide enhanced extended rearward compartmentation. Includes (1) 56" wide compartment over the wheel well.	$7,695
3100-0093	Driver side body with full height 24" wide forward and 36" wide rearward compartmentation. Includes (1) 56" wide compartment over the wheel well.	$7,424
3100-0094	Driver side body with full height 30" wide forward and 36" wide rearward compartmentation. Includes (1) 56" wide compartment over the wheel well.	$7,943
3100-0095	Driver side body with full height 36" wide forward and 36" wide rearward compartmentation. Includes (1) 56" wide compartment over the wheel well.	$8,508
3100-0096	Driver side body with full height 42" wide forward and 42" wide rearward compartmentation. Includes (1) 56" wide compartment over the wheel well.	$9,094
3100-0097	Driver side body with full height 48" wide forward and 48" wide rearward compartmentation. Includes (1) 56" wide compartment over the wheel well.	$9,730
3100-0098	Driver side body with upper and lower compartmentation. Includes 24" wide forward and 36" wide rearward lower compartments and (3) opening upper compartments.	$7,795
3100-0099	Driver side body with upper and lower compartmentation. Includes 30" wide forward and 36" wide rearward lower compartments and (3) opening upper compartments.	$8,313
3100-0100	Driver side body with upper and lower compartmentation. Includes 36" wide forward and 36" wide rearward lower compartments and (3) opening upper compartments.	$8,869
3100-0101	Driver side body with upper and lower compartmentation. Includes 42" wide forward and 42" wide rearward lower compartments and (3) opening upper compartments.	$9,465
3100-0102	Driver side body with upper and lower compartmentation. Includes 48" wide forward and 48" wide rearward lower compartments and (3) opening upper compartments.	$10,100
3100-0103	Driver side body with upper and lower compartmentation. Includes 42" wide forward and 42" wide rearward lower compartments, (3) opening upper compartments with portable water tank storage with access door at rear.	$9,747
3100-0104	Driver side body with upper and lower compartmentation. Includes 48" wide forward and 48" wide rearward lower compartments, (3) opening upper compartments with portable water tank storage with access door at rear.	$10,403
3100-0105	Driver side body with full height 24" wide forward and 50" wide rearward extended compartmentation. Includes (1) 56" wide compartment over the wheel well.	$7,943
3100-0106	Driver side body with full height 30" wide forward and 50" wide rearward extended compartmentation. Includes (1) 56" wide compartment over the wheel well.	$8,464
3100-0107	Driver side body with full height 36" wide forward and 50" wide rearward extended compartmentation. Includes (1) 56" wide compartment over the wheel well.	$9,017
3100-0108	Driver side body with full height 42" wide forward and 56" wide rearward extended compartmentation. Includes (1) 56" wide compartment over the wheel well.	$9,613
3100-0109	Driver side body with full height 48" wide forward and 62" wide rearward extended compartmentation. Includes (1) 56" wide compartment over the wheel well.	$10,249
3100-0110	Driver side body with full height 24" wide forward and 50" wide rearward enhanced extended compartmentation. Includes (1) 56" wide compartment over the wheel well.	$8,181
3100-0111	Driver side body with full height 30" wide forward and 50" wide rearward enhanced extended compartmentation. Includes (1) 56" wide compartment over the wheel well.	$8,700
3100-0112	Driver side body with full height 36" wide forward and 50" wide rearward enhanced extended compartmentation. Includes (1) 56" wide compartment over the wheel well.	$9,255
3100-0113	Driver side body with full height 42" wide forward and 56" wide rearward enhanced extended compartmentation. Includes (1) 56" wide compartment over the wheel well.	$9,851
3100-0114	Driver side body with full height 48" wide forward and 62" wide rearward enhanced extended compartmentation. Includes (1) 56" wide compartment over the wheel well.	$10,487
3100-0115	Driver side body with full height 36" wide forward and 36" wide rearward compartmentation. Includes (1) 56" wide compartment over the wheel well.	$9,094
3100-0116	Driver side body with full height 42" wide forward and 42" wide rearward compartmentation. Includes (1) 56" wide compartment over the wheel well.	$9,730
3100-0117	Driver side body with full height 48" wide forward and 48" wide rearward compartmentation. Includes (1) 56" wide compartment over the wheel well.	$10,410
3100-0118	Driver side body with full height 24" wide forward and 36" wide rearward compartmentation. Includes (1) 56" wide compartment over the wheel well and 30 degree angle of departure.	$7,711
3100-0119	Driver side body with full height 30" wide forward and 36" wide rearward compartmentation. Includes (1) 56" wide compartment over the wheel well and 30 degree angle of departure.	$8,230

3100-0120	Driver side body with full height 36" wide forward and 36" wide rearward compartmentation. Includes (1) 56" wide compartment over the wheel well and 30 degree angle of departure.	$8,786
3100-0121	Stainless steel driver side body with full height 36" wide forward and 48" wide rearward compartmentation (interior). Includes (1) 60" wide compartment over the wheel well.	$9,348
3100-0122	Stainless steel driver side body with full height 48" wide forward and 48" wide rearward compartmentation (interior). Includes (1) 60" wide compartment over the wheel well.	$10,702
3100-0123	Stainless steel driver side body with full height 60" wide forward and 60" wide rearward compartmentation (interior). Includes (1) 60" wide compartment over the wheel well.	$11,452
3100-0124	Stainless steel driver side body with full height 48" wide forward and 60" wide rearward compartmentation (interior). Includes (1) 60" wide compartment over the wheel well.	$11,238
3100-0126	Driver side body with upper and lower compartmentation. Includes 60" wide forward and 42" wide rearward lower compartments and (3) opening upper compartments.	$10,807
3100-0127	Driver side body with upper and lower compartmentation. Includes 60" wide forward and 42" wide rearward lower compartments, (3) opening upper compartments with portable water tank storage with access door at rear.	$11,106
3100-0128	Driver side body with full height 60" wide forward and 42" wide rearward compartmentation. Includes (1) 56" wide compartment over the wheel well.	$10,410
3100-0129	Driver side body with full height 36" wide rearward compartmentation. Includes (1) 56" wide compartment over the wheel well.	$6,937
3100-0130	Driver side body with full height 36" wide rearward compartmentation. Includes (1) 56" wide compartment over the wheel well and 30 degree angle of departure.	$7,225
3100-0131	Stainless steel driver side body with full height 36" wide forward and 48" wide rearward compartmentation (interior). Includes (1) 60" wide compartment over the wheel well.	$9,348
3100-0132	Stainless steel driver side body with full height 48" wide forward and 48" wide rearward compartmentation (interior). Includes (1) 60" wide compartment over the wheel well.	$10,702
3100-0133	Stainless steel driver side body with full height 60" wide forward and 60" wide rearward compartmentation (interior). Includes (1) 60" wide compartment over the wheel well.	$11,452
3100-0134	Stainless Steel Driver side body with full height 48" wide forward and 60" wide rearward compartmentation (interior). Includes (1) 60" wide compartment over the wheel well.	$11,238
3100-0135	Driver side body with full height 60" wide forward and 56" wide rearward compartmentation. Includes (1) 56" wide compartment over the wheel well.	$11,140
3100-0136	Driver side tunnel to hold: Lower section (3) Backboards. Upper section (1) Divider full length of tunnel, bolted at front of tunnel and held in place by a slot in the rear of tunnel for removability.	$527
3100-0137	Driver side compartment top storage box. Box to be smooth plate and painted job color with diamond plate top. Box to have a rear vertically hinged door with push-button latch. Box to have diamond plate lids with push button latches.	$1,575
3100-0138	Driver side body with upper and lower compartmentation. Includes 24" wide forward and 36" wide rearward lower compartments and (2) opening upper compartments.	$7,795
3100-0139	Compartment L1 to have rescue style interior compartment height.	$1,260
3100-0142	Driver side body with full height 42" wide forward and 48" wide rearward compartmentation. Includes (1) 56" wide compartment over the wheel well and upper area for recessed pike pole storage.	$9,094
3100-0143	Driver side body with full height 52" wide forward and 52" wide rearward compartmentation. Includes (1) 56" wide compartment over the wheel well.	$10,410
3100-0144	Driver side body with full height 36" wide forward and 50" wide rearward compartmentation. Includes (1) 56" wide compartment over the wheel well.	$9,255
3100-0145	Driver side body with full height 30" wide forward and 50" wide rearward compartmentation. Includes (1) 56" wide compartment over the wheel well.	$8,700
3100-0146	Driver side body with full height 24" wide forward and 50" wide rearward compartmentation. Includes (1) 56" wide compartment over the wheel well.	$8,181
3100-0148	Driver side body with full height 42" wide forward and 56" wide rearward compartmentation. Includes (1) 56" wide compartment over the wheel well.	$9,810
3100-0149	Driver side body with full height 36" wide forward and 42" wide rearward compartmentation. Includes (1) 56" wide compartment over the wheel well.	$9,730
3100-0152	Driver side body with full height 36" wide forward and 50" wide rearward enhanced extended compartmentation. Includes (1) 56" wide compartment over the wheel well.	$9,840
3100-0153	Driver side body with full height 42" wide forward and 56" wide rearward enhanced extended compartmentation. Includes (1) 56" wide compartment over the wheel well.	$10,476
3100-0154	Driver side body with full height 48" wide forward and 62" wide rearward enhanced extended compartmentation. Includes (1) 56" wide compartment over the wheel well.	$11,157
3100-0155	Driver side body with full height 60" wide forward and 56" wide rearward enhanced extended compartmentation. Includes (1) 56" wide compartment over the wheel well.	$11,886
3100-0156	Driver side body with full height 30" wide forward and 36" wide rearward compartmentation. Includes (1) 56" wide compartment over the wheel well. Front and rear compartment opening height to be 66.75" high.	$8,503
3100-0159	Driver side body with full height 42" wide forward and 56" wide rearward enhanced extended compartmentation. Includes (1) 56" wide compartment over the wheel well and one (1) storage tunnel and access door at rear.	$12,889
3100-0160	Driver side body with full height 30" wide forward and 50" wide rearward enhanced extended compartmentation. Includes (1) 56" wide compartment over the wheel well.	$9,248
3100-0162	2-Arm Ladder Rack. The ladder rack includes amber lights on each end to visually indicate when the rack is in motion. Ladder rack to hold storage box with (1) vertically hinged rearward and (2) horizontally hinged outboard (when ladder rack in the down position) diamond plate doors with push button latches. The outboard horizontally hinged door(s) to have chains set to open at approx 160 degrees. Forward section of the box to hold (2) backboards and the rearward section to hold (1) stokes basket.	$15,268
3100-0163	Driver side body with full height 50" wide forward and 50" wide rearward enhanced extended compartmentation. Includes (1) 56" wide compartment over the wheel well.	$10,476
3100-0164	Driver side body with full height 56" wide forward and 56" wide rearward enhanced extended compartmentation. Includes (1) 56" wide compartment over the wheel well.	$11,157

3100-0165	Driver side body with full height 62" wide forward and 62" wide rearward enhanced extended compartmentation. Includes (1) 56" wide compartment over the wheel well.	$11,836
3100-0166	Driver side tunnel to hold: [#LOC].	$527
3100-0167	Driver side body with full height 62" wide forward and 62" wide rearward enhanced extended compartmentation. Includes (1) 56" wide compartment over the wheel well.	$11,126
3100-0168	Driver side body with full height 30" wide forward and 50" wide rearward enhanced extended compartmentation. Includes (1) 56" wide compartment over the wheel well. Rear compartment to be pumper style enhanced extended (shallow upper and deep lower compartmentation).	$10,782
3100-0171	Driver side body with full height 24" wide forward and 50" wide rearward extended compartmentation. Includes (1) 33" wide compartment over the wheel well and (1) Zico Overhead Ladder Rack.	$13,361
3100-0172	Driver side body with full height 24" wide forward and 56" wide rearward extended compartmentation. Includes (1) 56" wide compartment over the wheel well.	$8,664
3100-0173	Driver side body with full height 24" wide forward and 50" wide rearward enhanced extended compartmentation. Includes (1) 56" wide compartment over the wheel well. Rear compartment to be pumper style enhanced extended (shallow upper and deep lower compartmentation).	$11,455
3100-0174	Driver side body with upper and lower compartmentation. Includes 36" wide forward and 50" wide rearward extended lower compartments and (3) opening upper compartments.	$13,026
3100-0175	Driver side body with full height 36" wide forward and 36" wide rearward compartmentation. Includes (1) 56" wide compartment over the wheel well and one (1) storage tunnel.	$11,505
3100-0176	Driver side body with full height 36" wide forward and 50" wide rearward enhanced extended compartmentation. Includes (1) 56" wide compartment over the wheel well and one (1) storage tunnel.	$12,252
3100-0177	Driver side body with full height 42" wide forward and 42" wide rearward compartmentation. Includes (1) 56" wide compartment over the wheel well and one (1) storage tunnel.	$12,141
3100-0178	Driver side body with full height 42" wide forward and 56" wide rearward enhanced extended compartmentation. Includes (1) 56" wide compartment over the wheel well and one (1) storage tunnel.	$12,889
3100-0179	Driver side body with full height 48" wide forward and 48" wide rearward compartmentation. Includes (1) 56" wide compartment over the wheel well and one (1) storage tunnel.	$12,822
3100-0180	Driver side body with full height 48" wide forward and 62" wide rearward enhanced extended compartmentation. Includes (1) 56" wide compartment over the wheel well and one (1) storage tunnel.	$13,569
3100-0181	Driver side body with full height 60" wide forward and 42" wide rearward compartmentation. Includes (1) 56" wide compartment over the wheel well and one (1) storage tunnel.	$13,552
3100-0182	Driver side body with full height 60" wide forward and 56" wide rearward enhanced extended compartmentation. Includes (1) 56" wide compartment over the wheel well and one (1) storage tunnel.	$14,298
3100-0183	Driver side body with full height 36" wide forward and 50" wide rearward enhanced extended compartmentation (2008 body design) with (1) 56" wide compartment over the wheel well.	$14,285
3100-0185	Driver side body with full height 20" wide forward and 50" wide rearward extended compartmentation. Includes (1) 56" wide compartment over the wheel well.	$7,768
3105-0006	Rear Mount forward body compartments. Includes L1/R1 54" wide x 26" deep in the 56" lower area and 12" deep in the 12" upper area, L2/R2 56" wide x 26" deep in the 22" lower area and 12" deep in the 12" upper area.	$1,271
3105-0010	Rear Mount forward body. Includes main side body structures and compartment LT/RT, L1/R1, L2/R2. LT/RT (full width and 95" high) with lower storage areas (compartment opening 67" wide and same height as main body compartments). Includes full width forward storage pan and a pan in the rearward center/officer area between the driver roof top compartment. Transverse floor to run full width. Rear headboard to have area for routing of plumbing for preconnects located in rearward area. Area above preconnects (forward area) to be for storage of a stokes basket. L1/R1 54" wide x 26" deep in the 56" lower area and 12" deep in the 12" upper area, L2/R2 56" wide x 26" deep in the 22" lower area and 12" deep in the 12" upper area.	$26,161
3105-0036	Rear Mount forward body. Includes main side body structures and compartment LT/RT, L1/R1, L2/R2. LT/RT (full width and 95" high) with lower storage areas (compartment opening 67" wide and same height as main body compartments). Includes full width storage pan. Transverse floor to run full width. Rear headboard to have area for routing of plumbing for preconnects located in rearward area. The speedlay area to be stacked style and offset to rearward area of the transverse compartment. The upper speedlay area to hold (2) speedlay trays: (1) to hold - 200' of 2.5" DJ hose and (1) dry lay to hold - 100' of 1.75" DJ hose and 100' of 2.5" DJ hose. The lower speedlay area to hold (3) speedlay trays: (2) to hold 200' of 1.75" DJ hose each and (1) to hold 100' of 1.75" DJ hose. L1/R1 54" wide x 26" deep in the 56" lower area and 12" deep in the 12" upper area, L2/R2 56" wide x 26" deep in the 22" lower area and 12" deep in the 12" upper area.	$26,161
3110-0000	Center Slam Strip Rear End with (3) compartments- (2) lower and (1) upper and a diamond plate center strip for a Jet or Newton Dump application. Includes diamond plate panels.	$1,974
3110-0001	Center Slam Strip Rear End with (3) compartments- (2) lower and (1) upper and a smooth plate center strip for a Jet or Newton Dump application. Includes smooth plate panels.	$1,974
3110-0002	Upper and Lower Rear Compartment. Includes diamond plate panels.	$1,522
3110-0003	Upper and Lower Rear Compartment. Includes smooth plate panels.	$1,522
3110-0004	Full Height Rear Compartment. Includes diamond plate panels.	$1,068
3110-0005	Full Height Rear Compartment. Includes smooth plate panels.	$1,068
3110-0006	Full Height Rear Compartment with Upper Ladder Storage Compartment. Includes smooth plate panels. Includes area for storage of (1) 24', (1) 14', (1) 10' Attic, (2) pike poles and a drop down storage access door with push buton latches (wire to door ajar).	$1,822
3110-0007	Full Height Rear Compartment. Includes diamond plate panels, 30 degree angle of departure with flip down tailboard and (3) handrails- (2) vertically and (1) horizontally.	$2,334
3110-0008	Full Height Rear Compartment. Includes smooth plate panels, 30 degree angle of departure with flip down tailboard and (3) handrails- (2) vertically and (1) horizontally.	$2,334
3110-0010	Full Height Rear Compartment with Upper Ladder Storage Compartment. Includes area for storage of (1) 24', (1) 14', (1) 10' Attic, (2) pike poles and a drop down storage access door with push button latches (wire to door ajar).	$1,822
3110-0011	Full Height Rear Compartment with Upper Storage Compartment and Officer Side Storage Tunnel. Includes smooth plate panels and storage access doors with push button latches.	$1,896

3110-0012	Full Height Rear Compartment with Upper Storage Compartment and Officer Side Ladder Tunnel. Includes diamond plate panels and storage access doors with push button latches.	$1,896
3110-0013	Full Height Rear Compartment with Officer Side Storage Tunnel. Includes smooth plate panels and storage access door with push button latch.	$993
3110-0014	Full Height Rear Compartment with Officer Side Ladder Tunnel and Recessed Traffic Advisor. Includes smooth plate panels and storage door with push buton latch..	$1,314
3110-0015	Full Height Rear Compartment with Officer Side Ladder Tunnel. Includes diamond plate panels and storage access door with push button latch.	$962
3110-0016	Full Height Rear Compartment with Officer Side Ladder Tunnel and Recessed Traffic Advisor. Includes diamond plate panels and storage door with push button latch.	$1,314
3110-0017	Full Height Rear Compartment with diamond plate panels.	$890
3110-0018	Full Height Rear Compartment with smooth plate panels.	$890
3110-0019	Full Height Rear Compartment with recessed traffic advisor and smooth plate panels.	$1,242
3110-0020	Full Height Rear Compartment with recessed traffic advisor and diamond plate panels.	$1,242
3110-0021	Rear mount rear end with upper storage area and lower pump panel. Includes 12" bolt-on tailboard, smooth plate panels and upper access area door with push button latches.	$1,477
3110-0023	Rear mount rear end with upper storage area, lower pump panel area and officer side ladder/equipment tunnel. Includes 12" bolt-on tailboard, smooth plate panels, upper access area and ladder/equipment storage doors with push button latches.	$1,548
3110-0024	Stainless Steel rear end with lower center compartment. Includes 12" bolt-on diamond plate tailboard and (3) rear NFPA handrails.	$2,109
3110-0025	Stainless steel rear end with lower center compartment.	$2,256
3110-0027	Rear of body to have un-painted extrusions with un-painted smooth plate body panels or just unpainted smooth plate to facilitate rear body striping.	$219
3110-0033	Single low rear compartment. For use with low hosebed. Includes diamond plate panels.	$801
3110-0035	Upper rear compartment depth to be approximately 25" deep.	$238
3110-0036	Upper and Lower Rear Compartment with Officer Side Ladder Tunnel. Includes diamond plate panels and storage access door with push button latches.	$2,370
3110-0038	Bolt-on diamond plate tailboard (full width of rear compartment). Includes the enhanced extended side compartment frame work with diamond plate compartment tops, (3) folding steps- (2) low and (1) high officer side with a 12" handrail (as applicable) and (3) handrails- (2) vertically on trailing edge of body and (1) horizontally below hosebed.	$744
3110-0039	Bolt-on diamond plate tailboard (full width of body). Includes (2) handrails- (1) vertically on officer body and (1) horz below hosebed, aluminum ladder (angled) on offier side from tailboard to top edge of body and (3) Cast Products steps (staggered) on driver side.	$2,596
3110-0040	Compartment B1 to be 30" deep ipos 26" deep.	$754
3110-0042	Single low rear compartment. For use with low hosebed. Includes smooth plate panels.	$850
3110-0044	Bolt-on diamond plate 10" tailboard (full width of body). Includes (3) handrails- (2) vertically on trailing edge of body and (1) horizontally below hosebed.	$897
3110-0045	Upper and Lower Rear Compartment with Officer Side Ladder Tunnel. Includes smooth plate panels and storage access door with push button latches.	$2,370
3110-0046	Enhanced extended rear compartmentation for Rescue Pumper. Includes 14" of additional interior width to the rear side compartments and 25" of additional depth in the rearward 14" wide section. Overall interior height will vary depending on additional option selections.	$1,667
3110-0047	Full Height Rear Compartment with Full Width Upper Ladder Storage Compartment with smooth plate panels. Includes area for storage of (1) 24', (1) 14', (1) 10' Attic, (2) pike poles, (1) stokes basket and a drop down storage access door with push buton latches (wire to door ajar). Includes channels each side of ladder tunnel for discharges to terminate.	$2,733
3110-0048	Enhanced extended rear compartmentation for Rescue Pumper. Includes 14" of additional interior width to the rear side compartments and 25" of additional depth in the rearward 14" wide section. Overall interior height will vary depending on additional option selections. Includes bolt-on diamond plate tailboard (full width of rear compartment) and (3) handrails- (2) vertically on trailing edge of body and (1) horizontally below hosebed.	$2,305
3110-0049	Bolt-on diamond plate tailboard (full width of rear compartment). Additional 10" of tailboard to run full width of body ("T" shaped tailboard). Includes the enhanced extended side compartment frame work with diamond plate compartment tops, (1) officer side lower area folding step. Driver side includes (1) upper hosebed mounted handrail (as applicable) and (3) handrails- (2) vertically on trailing edge of body and (1) horizontally below hosebed.	$2,008
3110-0051	B1 compartment to have no door. Includes removal of compartment lights and door ajar.	$320
3110-0052	Bolt-on diamond plate tailboard (full width of rear compartment). Includes the enhanced extended side compartment frame work and handrails- (2) vertically on trailing edge of body and horizontally mounted handrail(s) below hosebed.	$955
3110-0053	Bolt-on diamond plate tailboard (full width of rear compartment). Additional 10" of tailboard to run full width of body ("T" shaped tailboard). Includes the enhanced extended side compartment frame work and (3) handrails- (2) vertically on trailing edge of body and (1) horizontally below hosebed.	$2,008
3110-0057	Lower Rear Compartment only. Upper section to be diamond plate panel. Includes diamond plate panels.	$923
3110-0060	Full Height Rear Compartment with Upper Ladder Storage Compartment. Includes diamond plate panels. Includes area for misc. storage and a drop down storage access door with push button latches (wire to door ajar).	$1,822
3110-0063	Full Height Rear Compartment with Upper Ladder Storage Compartment. Includes smooth plate panels. Includes area for misc. storage and a drop down storage access door with push button latches (wire to door ajar).	$1,822
3110-0064	Upper Storage Compartment to have (1) bolt-in compartment 24" deep. Compartment for storage of misc. items. Includes holding center divider for lower hosebed short to allow room for compartment.	$512
3110-0065	Full Height Rear Compartment with Officer Side Ladder Tunnel. Includes officer side rear tunnel access door with latch (material to match rearend platework).	$993

3110-0066	Full Height Rear Compartment.	$890
3110-0067	Lower Rear Compartment only. Upper section to be diamond plate panel. Includes diamond plate panels. Additional diamond plate area just above compartment for mounting of recessed directional lightbar.	$5,135
3110-0068	Center Slam Strip Rear End with (3) compartments - (2) lower and (1) upper and a smooth plate center strip for a Jet or Newton Dump application. Includes smooth plate panels. Includes area above upper compartment for directional lightbar.	$4,079
3110-0069	Full Height Rear Compartment with Upper Storage Compartment and Officer Side Ladder Tunnel. Includes diamond plate panels and storage access doors with Tri-Mark model 030-1300 door latches. The upper tunnel to have on the officer side a stop at 128" and on the driver side a stop at 72" from rear of truck.	$2,307
3110-0070	Upper and Lower Rear Compartment. Includes smooth plate panels. B1 to be 36" wide due to enhanced extended feature and vertically hinged door(s).	$2,136
3110-0071	Spacer panel(s) for recess/warning lighting. Located:[#LOC]. Panel(s) tol be painted job color and to iinclude mounting area for any and all lighting mounted in area.	$248
3110-0073	Upper rear compartment depth to be approximately 29" deep.	$443
3110-0074	Full Height Rear Compartment with Officer Side Ladder Tunnel. Includes smooth plate panels and storage access door with push button latch. Includes a 18" channel for (2) tank inlets and (1) 5" jet dump located 16" up from bottom of compartment opening. Includes area above the channel for mounting of a booster reel. The lower opening to have double door and the upper opening to have a dutch door.	$4,059
3110-0075	Full Height Rear Compartment with Officer Side Ladder Tunnel. Includes diamond plate panels and storage access door with push button latch(es). Includes stepped upper horizontal tube to reduce hosebed height from ground over tank and driver side hosebed area.	$2,496
3110-0076	Full Height Rear Compartment with Officer Side Ladder Tunnel. Includes diamond plate panels and storage access door with D-ring latch.	$962
3110-0077	Provide modification to B1 officer side compartment opening. To include vertical extrusion and smooth plate panel with lower access door with push button latches for access to tow eye in compartment. Interior width of B1 to remain standard.	$1,117
3110-0078	Lower Rear Compartment only. Upper section to be smooth plate panel. Includes smooth plate panels.	$923
3110-0081	Full Height Rear Compartment with Officer Side Ladder Tunnel. Includes smooth plate panels and storage access door with D-ring latch.	$993
3110-0083	Half length offcir side tunnel. Reduces officer side upper compartment depths of R2 and R3 to 12" deep IPO 26".	$1,811
3110-0085	Upper and Lower Rear Compartment. Includes upper and lower sanded smooth plate panels. Upper rear compartment door to be offset to driver side constructed of smooth plate. Upper rear compartment to be 56" wide for little giant ladder storage. (2) 1.5" x 4" extrusions to be stacked between upper and lower compartments for directional light mounted under intermediate rear step.	$1,978
3110-0086	Bolt-on diamond plate 24" tailboard (full width of hosebed). Includes (3) handrails- (2) vertically on trailing edge of body and (1) horizontally below hosebed.	$952
3110-0087	Full Height Rear Compartment with Upper Storage Compartment and Officer Side Ladder Tunnel. Includes smooth plate panels and storage access doors with Tri-Mark door latches.	$2,371
3110-0088	Full Height Rear Compartment with Officer Side Ladder Tunnel. Includes diamond plate panels and storage access door with push button latch. Officer side to have Rescue Pumper and Driver to have Pumper style enhanced extended.	$3,812
3110-0093	Full Height Rear Compartment with Driver Side Storage Tunnel. Includes smooth plate panels and storage access door with push button latch.	$993
3110-0094	Full Height Rear Compartment with Upper Storage Compartment and Driver Side Storage Tunnel. Includes smooth plate panels and storage access doors with push button latches.	$1,896
3110-0095	Full Height Rear Compartment with Driver and Officer Side Storage Tunnels. Includes smooth plate panels and storage access doors with push button latches.	$1,095
3110-0096	Full Height Rear Compartment with Upper Storage Compartment, Driver and Officer Side Storage Tunnels. Includes smooth plate panels and storage access doors with push button latches.	$2,122
3110-0097	Bolt-on smooth plate tailboard (full width of rear compartment). Tailboard to include gator grip and be black duraback painted. Includes the enhanced extended side compartment frame work (2008 design) and handrails- (2) vertically on trailing edge of body and horizontally mounted handrail(s) below hosebed. Handrails to include center stanchion.	$1,447
3110-0099	NFPA hosebed access ladder. Zico brand with 12" rung width for increased visiblity of rear outboard body mounted DOT/NFPA lighting. Location: [#LOC].	$1,499
3110-0105	Upper Storage Compartment to hold (1) 17' Little Giant ladder and (1) backboard in place of standard ladder components. Little giant ladder to be located on officer side of storage tunnel stop bracket included approximately 113" back from opening, ladder to be stored in unfolded position. Backboard to be located in aluminum box hanging from upper area of officer side tunnel. Tunnel divider to be held 6" short from opening.	$512
3110-0111	Upper and Lower Rear Compartment. Includes smooth plate lower panels outboard of B1 and diamond plate upper panels outboard of B2. Includes (2) 1.5" x 4" extrusions to be stacked between upper and lower compartments for directional light mounted under intermediate rear step and back-up camera to be mounted centered in front of directional lightbar. The upper compartment to be offset to officer side due to rear discharge options.	$3,184
3120-0000	Officer half side body with 24" wide forward and 36" wide rearward compartmentation. Includes adjustable ladder tracks.	$3,712
3120-0001	Officer half side body with 24" wide forward and 50" wide rearward extended compartmentation. Includes adjustable ladder tracks.	$4,231
3120-0003	Officer half side body with 30" wide forward and 36" wide rearward compartmentation. Includes adjustable ladder tracks.	$3,972
3120-0004	Officer half side body with 36" wide forward and 36" wide rearward compartmentation. Includes adjustable ladder tracks.	$4,251
3120-0005	Officer half side body with 42" wide forward and 42" wide rearward compartmentation. Includes adjustable ladder tracks.	$4,547

3120-0006	Officer half side body with 48" wide forward and 48" wide rearward compartmentation. Includes adjustable ladder tracks.	$4,867
3120-0007	Officer half side body with 30" wide forward and 50" wide rearward extended compartmentation. Includes adjustable ladder tracks.	$4,492
3120-0008	Officer half side body with 36" wide forward and 50" wide rearward extended compartmentation. Includes adjustable ladder tracks.	$4,769
3120-0009	Officer half side body with 42" wide forward and 56" wide rearward extended compartmentation. Includes adjustable ladder tracks.	$5,068
3120-0010	Officer half side body with 48" wide forward and 62" wide rearward extended compartmentation. Includes adjustable ladder tracks.	$5,386
3120-0011	Officer half side body with 24" wide forward and 50" wide rearward enhanced extended compartmentation. Includes adjustable ladder tracks.	$4,470
3120-0012	Officer half side body with 30" wide forward and 50" wide rearward enhanced extended compartmentation. Includes adjustable ladder tracks.	$4,729
3120-0013	Officer half side body with 36" wide forward and 50" wide rearward enhanced extended compartmentation. Includes adjustable ladder tracks.	$5,007
3120-0014	Officer half side body with 42" wide forward and 56" wide rearward enhanced extended compartmentation. Includes adjustable ladder tracks.	$5,305
3120-0015	Officer half side body with 48" wide forward and 62" wide rearward enhanced extended compartmentation. Includes adjustable ladder tracks.	$5,623
3120-0016	Officer 3/4 side body with upper and lower compartmentation. Includes 24" wide forward and 36" wide rearward lower compartments and (3) opening upper compartments.	$5,011
3120-0017	Officer 3/4 side body with full height 24" wide forward and 36" wide rearward compartmentation. Includes (1) 56" wide compartment over the wheel well.	$4,641
3120-0018	Officer 3/4 side body with upper and lower compartmentation. Includes 30" wide forward and 36" wide rearward lower compartments and (3) opening upper compartments.	$5,335
3120-0019	Officer 3/4 side body with upper and lower compartmentation. Includes 36" wide forward and 36" wide rearward lower compartments and (3) opening upper compartments.	$5,683
3120-0020	Officer 3/4 side body with upper and lower compartmentation. Includes 42" wide forward and 42" wide rearward lower compartments and (3) opening upper compartments.	$6,055
3120-0021	Officer 3/4 side body with upper and lower compartmentation. Includes 48" wide forward and 48" wide rearward lower compartments and (3) opening upper compartments.	$6,453
3120-0022	Officer 3/4 side body with full height 30" wide forward and 36" wide rearward compartmentation. Includes (1) 56" wide compartment over the wheel well.	$4,966
3120-0023	Officer 3/4 side body with full height 36" wide forward and 36" wide rearward compartmentation. Includes (1) 56" wide compartment over the wheel well.	$5,311
3120-0024	Officer 3/4 side body with full height 42" wide forward and 42" wide rearward compartmentation. Includes (1) 56" wide compartment over the wheel well.	$5,684
3120-0025	Officer 3/4 side body with full height 48" wide forward and 48" wide rearward compartmentation. Includes (1) 56" wide compartment over the wheel well.	$6,082
3120-0026	Officer 3/4 side body with 24" wide forward and 50" wide rearward extended compartmentation. Includes (1) 56" wide compartment over the wheel well.	$5,159
3120-0027	Officer 3/4 side body with 30" wide forward and 50" wide rearward extended compartmentation. Includes (1) 56" wide compartment over the wheel well.	$5,484
3120-0028	Officer 3/4 side body with 36" wide forward and 50" wide rearward extended compartmentation. Includes (1) 56" wide compartment over the wheel well.	$5,833
3120-0029	Officer 3/4 side body with 42" wide forward and 56" wide rearward extended compartmentation. Includes (1) 56" wide compartment over the wheel well.	$6,204
3120-0030	Officer 3/4 side body with 48" wide forward and 62" wide rearward extended compartmentation. Includes (1) 56" wide compartment over the wheel well.	$6,603
3120-0031	Officer 3/4 side body with 24" wide forward and 50" wide rearward enhanced extended compartmentation. Includes (1) 56" wide compartment over the wheel well.	$5,398
3120-0032	Officer 3/4 side body with 30" wide forward and 50" wide rearward enhanced extended compartmentation. Includes (1) 56" wide compartment over the wheel well.	$5,721
3120-0033	Officer 3/4 side body with 36" wide forward and 50" wide rearward enhanced extended compartmentation. Includes (1) 56" wide compartment over the wheel well.	$6,068
3120-0034	Officer 3/4 side body with 42" wide forward and 50" wide rearward enhanced extended compartmentation. Includes (1) 56" wide compartment over the wheel well.	$6,441
3120-0035	Officer 3/4 side body with 48" wide forward and 62" wide rearward enhanced extended compartmentation. Includes (1) 56" wide compartment over the wheel well.	$6,839
3120-0036	Officer side body with full height 24" wide forward and 36" wide rearward compartmentation. Includes (1) 33" wide compartment (forward) over the wheel well and (1) Zico Overhead Ladder Rack.	$12,841
3120-0037	Officer side body with full height 30" wide forward and 36" wide rearward compartmentation. Includes (1) 33" wide compartment (forward) over the wheel well and (1) Zico Overhead Ladder Rack.	$13,361
3120-0038	Officer side body with full height 36" wide forward and 36" wide rearward compartmentation. Includes (1) 33" wide compartment (forward) over the wheel well and (1) Zico Overhead Ladder Rack.	$13,916
3120-0039	Officer side body with full height 42" wide forward and 42" wide rearward compartmentation. Includes (1) 33" wide compartment (forward) over the wheel well and (1) Zico Overhead Ladder Rack.	$14,511
3120-0040	Officer side body with full height 48" wide forward and 48" wide rearward compartmentation. Includes (1) 33" wide compartment (forward) over the wheel well and (1) Zico Overhead Ladder Rack.	$15,147
3120-0041	Officer side body with full height 24" wide forward and 50" wide rearward extended compartmentation. Includes (1) 33" wide compartment (forward) over the wheel well and (1) Zico Overhead Ladder Rack.	$13,361
3120-0042	Officer side body with full height 30" wide forward and 50" wide rearward extended compartmentation. Includes (1) 33" wide compartment (forward) over the wheel well and (1) Zico Overhead Ladder Rack.	$13,880

3120-0043	Officer side body with full height 36" wide forward and 50" wide rearward extended compartmentation. Includes (1) 33" wide compartment (forward) over the wheel well and (1) Zico Overhead Ladder Rack.	$14,436
3120-0044	Officer side body with full height 42" wide forward and 56" wide rearward extended compartmentation. Includes (1) 33" wide compartment (forward) over the wheel well and (1) Zico Overhead Ladder Rack.	$15,031
3120-0045	Officer side body with full height 48" wide forward and 62" wide rearward extended compartmentation. Includes (1) 33" wide compartment (forward) over the wheel well and (1) Zico Overhead Ladder Rack.	$15,666
3120-0046	Officer side body with full height 24" wide forward and 50" wide rearward enhanced extended compartmentation. Includes (1) 33" wide compartment (forward) over the wheel well and (1) Zico Overhead Ladder Rack.	$13,599
3120-0047	Officer side body with full height 30" wide forward and 50" wide rearward enhanced extended compartmentation. Includes (1) 33" wide compartment (forward) over the wheel well and (1) Zico Overhead Ladder Rack.	$14,118
3120-0048	Officer side body with full height 36" wide forward and 50" wide rearward enhanced extended compartmentation. Includes (1) 33" wide compartment (forward) over the wheel well and (1) Zico Overhead Ladder Rack.	$14,673
3120-0049	Officer side body with full height 42" wide forward and 56" wide rearward enhanced extended compartmentation. Includes (1) 33" wide compartment (forward) over the wheel well and (1) Zico Overhead Ladder Rack.	$15,267
3120-0050	Officer side body with full height 48" wide forward and 62" wide rearward enhanced extended compartmentation. Includes (1) 33" wide compartment (forward) over the wheel well and (1) Zico Overhead Ladder Rack.	$15,904
3120-0051	Officer half side body with 36" wide forward and 36" wide rearward compartmentation. Includes adjustable ladder tracks and 30 degree angle of departure.	$4,260
3120-0052	Officer 3/4 side body with full height 24" wide forward and 36" wide rearward compartmentation. Includes (1) 56" wide compartment over the wheel well and 30 degree angle of departure.	$7,983
3120-0053	Officer 3/4 side body with full height 30" wide forward and 36" wide rearward compartmentation. Includes (1) 56" wide compartment over the wheel well and 30 degree angle of departure.	$8,236
3120-0054	Officer 3/4 side body with full height 36" wide forward and 36" wide rearward compartmentation. Includes (1) 56" wide compartment over the wheel well and 30 degree angle of departure.	$8,489
3120-0055	Officer side body with full height 24" wide forward and 36" wide rearward compartmentation. Includes (1) 33" wide compartment (forward) over the wheel well, (1) Zico Overhead Ladder Rack and 30 degree angle of departure.	$14,503
3120-0056	Officer side body with full height 30" wide forward and 36" wide rearward compartmentation. Includes (1) 33" wide compartment (forward) over the wheel well, (1) Zico Overhead Ladder Rack and 30 degree angle of departure.	$14,756
3120-0057	Officer side body with full height 36" wide forward and 36" wide rearward compartmentation. Includes (1) 33" wide compartment (forward) over the wheel well, (1) Zico Overhead Ladder Rack and 30 degree angle of departure.	$15,010
3120-0058	Stainless steel officer half side body with 48" wide forward and 48" wide rearward compartmentation (interior). Includes adjustable ladder tracks.	$5,351
3120-0059	Stainless steel officer half side body with 48" wide forward and 60" wide rearward compartmentation (interior). Includes adjustable ladder tracks.	$5,620
3120-0060	Stainless steel officer half side body with 60" wide forward and 60" wide rearward compartmentation (interior). Includes adjustable ladder tracks.	$5,728
3120-0061	Stainless steel officer 3/4 side body with full height 36" wide forward and 48" wide rearward compartmentation (interior). Includes (1) 60" wide compartment over the wheel well.	$5,843
3120-0062	Stainless steel officer 3/4 side body with full height 48" wide forward and 48" wide rearward compartmentation (interior). Includes (1) 60" wide compartment over the wheel well.	$6,689
3120-0063	Stainless steel officer 3/4 side body with full height 48" wide forward and 60" wide rearward compartmentation (interior). Includes (1) 60" wide compartment over the wheel well.	$7,025
3120-0064	Stainless steel officer 3/4 side body with full height 60" wide forward and 60" wide rearward compartmentation (interior). Includes (1) 60" wide compartment over the wheel well.	$7,156
3120-0065	Stainless steel officer side body with full height 36" wide forward and 48" wide rearward compartmentation (interior). Includes (1) 45" wide compartment (rearward) over the wheel well and (1) Zico Overhead Ladder Rack.	$15,308
3120-0066	Stainless steel officer side body with full height 48" wide forward and 48" wide rearward compartmentation (interior). Includes (1) 45" wide compartment (rearward) over the wheel well and (1) Zico Overhead Ladder Rack.	$16,661
3120-0067	Stainless steel officer side body with full height 48" wide forward and 60" wide rearward compartmentation (interior). Includes (1) 45" wide compartment (rearward) over the wheel well and (1) Zico Overhead Ladder Rack.	$19,027
3120-0068	Stainless steel officer side body with full height 60" wide forward and 60" wide rearward compartmentation (interior). Includes (1) 45" wide compartment (rearward) over the wheel well and (1) Zico Overhead Ladder Rack.	$17,410
3120-0069	Stainless steel officer side body with full height 48" wide forward and 60" wide rearward compartmentation (interior). Includes (1) 60" wide compartment over the wheel well. For use with in the hosebed area ladder storage.	$11,238
3120-0070	Stainless steel officer side body with full height 60" wide forward and 60" wide rearward compartmentation (interior). Includes (1) 60" wide compartment over the wheel well. For use with in the hosebed area or thru the tank ladder storage.	$11,452
3120-0080	Officer side body with full height 36" wide forward and 36" wide rearward compartmentation. Includes (1) 33" wide compartment (forward) over the wheel well and (1) Zico Overhead Ladder Rack.	$14,890
3120-0081	Officer side body with full height 42" wide forward and 42" wide rearward compartmentation. Includes (1) 33" wide compartment (forward) over the wheel well and (1) Zico Overhead Ladder Rack.	$15,527
3120-0082	Officer side body with full height 48" wide forward and 48" wide rearward compartmentation. Includes (1) 33" wide compartment (forward) over the wheel well and (1) Zico Overhead Ladder Rack.	$16,208
3120-0083	Officer side body with full height 36" wide forward and 36" wide rearward compartmentation. Includes (1) 56" wide compartment over the wheel well and one (1)ladder storage tunnel and access door at rear.	$11,505
3120-0084	Officer side body with full height 42" wide forward and 42" wide rearward compartmentation. Includes (1) 56" wide compartment over the wheel well and one (1)ladder storage tunnel and access door at rear.	$12,141
3120-0085	Officer side body with full height 48" wide forward and 48" wide rearward compartmentation. Includes (1) 56" wide compartment over the wheel well and one (1)ladder storage tunnel and access door at rear.	$12,822
3120-0086	Officer side body with full height 42" wide forward and 42" wide rearward compartmentation. Includes (1) 56" wide compartment over the wheel well.	$9,730

3120-0087	Officer side body with full height 48" wide forward and 48" wide rearward compartmentation. Includes (1) 56" wide compartment over the wheel well. For use with thru the tank ladder storage.	$10,410
3120-0088	Officer side body with full height 60" wide forward and 42" wide rearward compartmentation. Includes (1) 33" wide compartment (forward) over the wheel well and (1) Zico Overhead Ladder Rack.	$16,937
3120-0089	Officer side body with full height 60" wide forward and 42" wide rearward compartmentation. Includes (1) 56" wide compartment over the wheel well and one (1)ladder storage tunnel and access door at rear.	$13,552
3120-0090	Officer side body with full height 60" wide forward and 42" wide rearward compartmentation. Includes (1) 56" wide compartment over the wheel well. For use with thru the tank ladder storage.	$11,140
3120-0091	Officer half side body with 36" wide rearward compartmentation. Includes adjustable ladder tracks and 30 degree angle of departure.	$2,140
3120-0092	Officer 3/4 side body with full height 36" wide rearward compartmentation. Includes (1) 56" wide compartment over the wheel well and 30 degree angle of departure.	$7,202
3120-0093	Officer half side body with 36" wide rearward compartmentation. Includes adjustable ladder tracks.	$2,290
3120-0094	Officer 3/4 side body with full height 36" wide rearward compartmentation. Includes (1) 56" wide compartment over the wheel well.	$4,228
3120-0095	Officer full height side body with upper and lower compartmentation. Includes 42" wide forward and 42" wide rearward lower compartments and (3) opening upper compartments. For use with ladder storage thru tank.	$9,465
3120-0096	Officer side body with full height 42" wide forward and 42" wide rearward compartmentation. Includes (1) 56" wide compartment over the wheel well. For use with ladder storage thru tank.	$9,094
3120-0097	Officer full height side body with upper and lower compartmentation. Includes 48" wide forward and 48" wide rearward lower compartments and (3) opening upper compartments. For use with ladder storage thru tank.	$10,100
3120-0098	Officer side body with full height 48" wide forward and 48" wide rearward compartmentation. Includes (1) 56" wide compartment over the wheel well. For use with ladder storage thru tank.	$9,730
3120-0099	Officer side body with full height 42" wide forward and 56" wide rearward extended compartmentation. Includes (1) 56" wide compartment over the wheel well.	$9,613
3120-0100	Officer side body with full height 42" wide forward and 56" wide rearward enhanced extended compartmentation. Includes (1) 56" wide compartment over the wheel well.	$9,851
3120-0101	Officer side body with full height 48" wide forward and 62" wide rearward extended compartmentation. Includes (1) 56" wide compartment over the wheel well.	$10,249
3120-0102	Officer side body with full height 48" wide forward and 62" wide rearward enhanced extended compartmentation. Includes (1) 56" wide compartment over the wheel well.	$10,487
3120-0104	Stainless steel officer 3/4 side body with full height 36" wide forward and 48" wide rearward compartmentation (interior). Includes (1) 60" wide compartment over the wheel well.	$10,738
3120-0105	Stainless steel officer 3/4 side body with full height 48" wide forward and 48" wide rearward compartmentation (interior). Includes (1) 60" wide compartment over the wheel well.	$11,281
3120-0106	Stainless steel officer 3/4 side body with full height 60" wide forward and 60" wide rearward compartmentation (interior). Includes (1) 60" wide compartment over the wheel well.	$12,365
3120-0107	Stainless steel officer 3/4 side body with full height 48" wide forward and 60" wide rearward compartmentation (interior). Includes (1) 60" wide compartment over the wheel well.	$11,822
3120-0108	Stainless steel officer side body with full height 36" wide forward and 48" wide (interior) rearward compartmentation. Includes (1) 45" wide (interior) compartment (forward) over the wheel well and (1) Zico Overhead Ladder Rack.	$16,378
3120-0109	Stainless steel officer side body with full height 48" wide forward and 48" wide (interior) rearward compartmentation. Includes (1) 45" wide (interior) compartment (forward) over the wheel well and (1) Zico Overhead Ladder Rack.	$17,828
3120-0110	Stainless steel officer side body with full height 60" wide forward and 60" wide (interior) rearward compartmentation. Includes (1) 45" wide (interior) compartment (forward) over the wheel well and (1) Zico Overhead Ladder Rack.	$18,630
3120-0111	Stainless steel officer side body with full height 48" wide forward and 60" wide (interior) rearward compartmentation. Includes (1) 45" wide (interior) compartment (forward) over the wheel well and (1) Zico Overhead Ladder Rack.	$18,363
3120-0112	Stainless steel officer side body with full height 36" wide forward and 48" wide rearward (interior) compartmentation. Includes (1) 60" wide compartment over the wheel well. For use with in the hosebed ladder storage.	$10,002
3120-0113	Stainless steel officer side body with full height 48" wide forward and 48" wide rearward (interior) compartmentation. Includes (1) 60" wide compartment over the wheel well. For use with in the hosebed ladder storage.	$11,452
3120-0114	Stainless steel officer side body with full height 48" wide forward and 60" wide rearward (interior) compartmentation. Includes (1) 60" wide compartment over the wheel well. For use with in the hosebed ladder storage.	$11,796
3120-0115	Stainless steel officer side body with full height 60" wide forward and 60" wide rearward (interior) compartmentation. Includes (1) 60" wide compartment over the wheel well. For use with in the hosebed ladder storage.	$11,452
3120-0116	Stainless steel officer side body with full height 36" wide forward and 48" wide (interior) rearward compartmentation. Includes (1) 60" wide compartment over the wheel well and one (1) ladder storage tunnel and access door at rear with push-button latch.	$12,995
3120-0117	Stainless steel officer side body with full height 48" wide forward and 48" wide (interior) rearward compartmentation. Includes (1) 60" wide compartment over the wheel well and one (1) ladder storage tunnel and access door at rear with push-button latch.	$14,443
3120-0118	Stainless steel officer side body with full height 48" wide forward and 60" wide (interior) rearward compartmentation. Includes (1) 60" wide compartment over the wheel well and one (1) ladder storage tunnel and access door at rear with push-button latch.	$15,166
3120-0119	Stainless steel officer side body with full height 60" wide forward and 60" wide (interior) rearward compartmentation. Includes (1) 60" wide compartment over the wheel well and one (1) ladder storage tunnel and access door at rear with push-button latch.	$15,245

3120-0121	Officer side body with full height 36" wide forward and 36" wide rearward compartmentation. Includes (1) 56" wide compartment over the wheel well.	$9,048
3120-0123	Officer half side body with 60" wide forward and 42" wide rearward compartmentation. Includes adjustable ladder tracks.	$5,206
3120-0124	Officer 3/4 side body with full height 60" wide forward and 42" wide rearward compartmentation. Includes (1) 56" wide compartment over the wheel well.	$6,508
3120-0125	Officer 3/4 side body with upper and lower compartmentation. Includes 60" wide forward and 42" wide rearward lower compartments and (3) opening upper compartments.	$6,904
3120-0126	Officer side body with full height 60" wide forward and 42" wide rearward compartmentation. Includes (1) 56" wide compartment over the wheel well. For use with ladder storage thru tank.	$10,410
3120-0127	Officer full height side body with upper and lower compartmentation. Includes 60" wide forward and 42" wide rearward lower compartments and (3) opening upper compartments. For use with ladder storage thru tank.	$10,807
3120-0128	Officer side body with full height 60" wide forward and 42" wide rearward compartmentation. Includes (1) 33" wide compartment (forward) over the wheel well and (1) Zico Overhead Ladder Rack.	$15,527
3120-0131	Stainless steel officer side body with full height 24" wide forward and 48" wide (interior) rearward compartmentation. Includes (1) 60" wide compartment over the wheel well and one (1) ladder storage tunnel and access door at rear with push-button latch.	$11,544
3120-0134	Officer side body with full height 30" wide forward and 36" wide rearward compartmentation. Includes (1) 56" wide compartment over the wheel well. For use with over the hosebed storage rack.	$7,943
3120-0135	Officer side body with full height 36" wide forward and 36" wide rearward compartmentation. Includes (1) 56" wide compartment over the wheel well. For use with over the hosebed storage rack.	$8,508
3120-0137	Officer 3/4 side body with full height 50" wide enhanced extended rearward compartmentation. Includes (1) 56" wide compartment over the wheel well.	$4,985
3120-0138	Officer 3/4 side body with upper and lower compartmentation. Includes 24" wide forward and 36" wide rearward lower compartments and (3) opening upper compartments.	$5,011
3120-0139	Officer 3/4 side body with full height 24" wide forward and 36" wide rearward compartmentation. Includes (1) 56" wide compartment over the wheel well.	$4,641
3120-0140	Officer 3/4 side body with upper and lower compartmentation. Includes 30" wide forward and 36" wide rearward lower compartments and (3) opening upper compartments.	$5,335
3120-0141	Officer 3/4 side body with upper and lower compartmentation. Includes 36" wide forward and 36" wide rearward lower compartments and (3) opening upper compartments.	$5,683
3120-0142	Officer 3/4 side body with upper and lower compartmentation. Includes 42" wide forward and 42" wide rearward lower compartments and (3) opening upper compartments.	$6,055
3120-0143	Officer 3/4 side body with upper and lower compartmentation. Includes 48" wide forward and 48" wide rearward lower compartments and (3) opening upper compartments.	$6,453
3120-0144	Officer 3/4 side body with full height 30" wide forward and 36" wide rearward compartmentation. Includes (1) 56" wide compartment over the wheel well.	$4,966
3120-0145	Officer 3/4 side body with full height 36" wide forward and 36" wide rearward compartmentation. Includes (1) 56" wide compartment over the wheel well.	$5,311
3120-0146	Officer 3/4 side body with full height 42" wide forward and 42" wide rearward compartmentation. Includes (1) 56" wide compartment over the wheel well.	$5,684
3120-0147	Officer 3/4 side body with full height 48" wide forward and 48" wide rearward compartmentation. Includes (1) 56" wide compartment over the wheel well.	$6,082
3120-0148	Officer 3/4 side body with 24" wide forward and 50" wide rearward extended compartmentation. Includes (1) 56" wide compartment over the wheel well.	$5,159
3120-0149	Officer 3/4 side body with 30" wide forward and 50" wide rearward extended compartmentation. Includes (1) 56" wide compartment over the wheel well.	$5,484
3120-0150	Officer 3/4 side body with 36" wide forward and 50" wide rearward extended compartmentation. Includes (1) 56" wide compartment over the wheel well.	$5,833
3120-0151	Officer 3/4 side body with 42" wide forward and 56" wide rearward extended compartmentation. Includes (1) 56" wide compartment over the wheel well.	$6,204
3120-0152	Officer 3/4 side body with 48" wide forward and 62" wide rearward extended compartmentation. Includes (1) 56" wide compartment over the wheel well.	$6,603
3120-0153	Officer 3/4 side body with 24" wide forward and 50" wide rearward enhanced extended compartmentation. Includes (1) 56" wide compartment over the wheel well.	$5,398
3120-0154	Officer 3/4 side body with 30" wide forward and 50" wide rearward enhanced extended compartmentation. Includes (1) 56" wide compartment over the wheel well.	$5,721
3120-0155	Officer 3/4 side body with 36" wide forward and 50" wide rearward enhanced extended compartmentation. Includes (1) 56" wide compartment over the wheel well.	$6,068
3120-0156	Officer 3/4 side body with 42" wide forward and 56" wide rearward enhanced extended compartmentation. Includes (1) 56" wide compartment over the wheel well.	$6,441
3120-0157	Officer 3/4 side body with 48" wide forward and 62" wide rearward enhanced extended compartmentation. Includes (1) 56" wide compartment over the wheel well.	$6,839
3120-0158	Officer side body with full height 24" wide forward and 36" wide rearward compartmentation. Includes (1) 33" wide compartment over the wheel well and (1) Zico Overhead Ladder Rack.	$12,841
3120-0159	Officer side body with full height 30" wide forward and 36" wide rearward compartmentation. Includes (1) 33" wide compartment over the wheel well and (1) Zico Overhead Ladder Rack.	$13,361
3120-0160	Officer side body with full height 36" wide forward and 36" wide rearward compartmentation. Includes (1) 33" wide compartment over the wheel well and (1) Zico Overhead Ladder Rack.	$13,916
3120-0161	Officer side body with full height 42" wide forward and 42" wide rearward compartmentation. Includes (1) 33" wide compartment over the wheel well and (1) Zico Overhead Ladder Rack.	$14,511
3120-0162	Officer side body with full height 48" wide forward and 48" wide rearward compartmentation. Includes (1) 33" wide compartment over the wheel well and (1) Zico Overhead Ladder Rack.	$15,147
3120-0163	Officer side body with full height 24" wide forward and 50" wide rearward extended compartmentation. Includes (1) 33" wide compartment over the wheel well and (1) Zico Overhead Ladder Rack.	$13,361

3120-0164	Officer side body with full height 30" wide forward and 50" wide rearward extended compartmentation. Includes (1) 33" wide compartment over the wheel well and (1) Zico Overhead Ladder Rack.	$13,880
3120-0165	Officer side body with full height 36" wide forward and 50" wide rearward extended compartmentation. Includes (1) 33" wide compartment over the wheel well and (1) Zico Overhead Ladder Rack.	$14,436
3120-0166	Officer side body with full height 42" wide forward and 56" wide rearward extended compartmentation. Includes (1) 33" wide compartment over the wheel well and (1) Zico Overhead Ladder Rack.	$15,031
3120-0167	Officer side body with full height 48" wide forward and 62" wide rearward extended compartmentation. Includes (1) 33" wide compartment over the wheel well and (1) Zico Overhead Ladder Rack.	$15,666
3120-0168	Officer side body with full height 24" wide forward and 50" wide rearward enhanced extended compartmentation. Includes (1) 33" wide compartment over the wheel well and (1) Zico Overhead Ladder Rack.	$13,599
3120-0169	Officer side body with full height 30" wide forward and 50" wide rearward enhanced extended compartmentation. Includes (1) 33" wide compartment over the wheel well and (1) Zico Overhead Ladder Rack.	$14,118
3120-0170	Officer side body with full height 36" wide forward and 50" wide rearward enhanced extended compartmentation. Includes (1) 33" wide compartment over the wheel well and (1) Zico Overhead Ladder Rack.	$14,673
3120-0171	Officer side body with full height 42" wide forward and 56" wide rearward enhanced extended compartmentation. Includes (1) 33" wide compartment over the wheel well and (1) Zico Overhead Ladder Rack.	$15,267
3120-0172	Officer side body with full height 48" wide forward and 62" wide rearward enhanced extended compartmentation. Includes (1) 33" wide compartment over the wheel well and (1) Zico Overhead Ladder Rack.	$15,904
3120-0173	Officer 3/4 side body with full height 24" wide forward and 36" wide rearward compartmentation. Includes (1) 56" wide compartment over the wheel well and 30 degree angle of departure.	$7,983
3120-0174	Officer 3/4 side body with full height 30" wide forward and 36" wide rearward compartmentation. Includes (1) 56" wide compartment over the wheel well and 30 degree angle of departure.	$8,236
3120-0175	Officer 3/4 side body with full height 36" wide forward and 36" wide rearward compartmentation. Includes (1) 56" wide compartment over the wheel well and 30 degree angle of departure.	$8,489
3120-0176	Officer side body with full height 24" wide forward and 36" wide rearward compartmentation. Includes (1) 33" wide compartment over the wheel well, (1) Zico Overhead Ladder Rack and 30 degree angle of departure.	$14,503
3120-0177	Officer side body with full height 30" wide forward and 36" wide rearward compartmentation. Includes (1) 33" wide compartment over the wheel well, (1) Zico Overhead Ladder Rack and 30 degree angle of departure.	$14,756
3120-0178	Officer side body with full height 36" wide forward and 36" wide rearward compartmentation. Includes (1) 33" wide compartment over the wheel well, (1) Zico Overhead Ladder Rack and 30 degree angle of departure.	$15,010
3120-0179	Stainless steel officer 3/4 side body with full height 36" wide forward and 48" wide rearward compartmentation (interior). Includes (1) 60" wide compartment over the wheel well.	$5,843
3120-0180	Stainless steel officer 3/4 side body with full height 48" wide forward and 48" wide rearward compartmentation (interior). Includes (1) 60" wide compartment over the wheel well.	$6,689
3120-0181	Stainless steel officer 3/4 side body with full height 48" wide forward and 60" wide rearward compartmentation (interior). Includes (1) 60" wide compartment over the wheel well.	$7,025
3120-0182	Stainless steel officer 3/4 side body with full height 60" wide forward and 60" wide rearward compartmentation (interior). Includes (1) 60" wide compartment over the wheel well.	$7,156
3120-0183	Stainless steel officer side body with full height 36" wide forward and 48" wide rearward compartmentation (interior). Includes (1) 45" wide compartment over the wheel well and (1) Zico Overhead Ladder Rack.	$15,308
3120-0184	Stainless steel officer side body with full height 48" wide forward and 48" wide rearward compartmentation (interior). Includes (1) 45" wide compartment over the wheel well and (1) Zico Overhead Ladder Rack.	$16,661
3120-0185	Stainless steel officer side body with full height 48" wide forward and 60" wide rearward compartmentation (interior). Includes (1) 45" wide compartment over the wheel well and (1) Zico Overhead Ladder Rack.	$19,027
3120-0186	Stainless steel officer side body with full height 60" wide forward and 60" wide rearward compartmentation (interior). Includes (1) 45" wide compartment over the wheel well and (1) Zico Overhead Ladder Rack.	$17,410
3120-0187	Stainless steel officer side body with full height 48" wide forward and 60" wide rearward compartmentation (interior). Includes (1) 60" wide compartment over the wheel well. For use with in the hosebed area ladder storage.	$11,238
3120-0188	Stainless steel officer side body with full height 60" wide forward and 60" wide rearward compartmentation (interior). Includes (1) 60" wide compartment over the wheel well. For use with in the hosebed area or thru the tank ladder storage.	$11,452
3120-0189	Officer side body with full height 36" wide forward and 36" wide rearward compartmentation. Includes (1) 33" wide compartment over the wheel well and (1) Zico Overhead Ladder Rack.	$14,890
3120-0190	Officer side body with full height 42" wide forward and 42" wide rearward compartmentation. Includes (1) 33" wide compartment over the wheel well and (1) Zico Overhead Ladder Rack.	$15,527
3120-0191	Officer side body with full height 48" wide forward and 48" wide rearward compartmentation. Includes (1) 33" wide compartment over the wheel well and (1) Zico Overhead Ladder Rack.	$16,208
3120-0192	Officer side body with full height 36" wide forward and 36" wide rearward compartmentation. Includes (1) 56" wide compartment over the wheel well and one (1) storage tunnel.	$11,505
3120-0193	Officer side body with full height 42" wide forward and 42" wide rearward compartmentation. Includes (1) 56" wide compartment over the wheel well and one (1) storage tunnel.	$12,141
3120-0194	Officer side body with full height 48" wide forward and 48" wide rearward compartmentation. Includes (1) 56" wide compartment over the wheel well and one (1) storage tunnel.	$12,822
3120-0195	Officer side body with full height 42" wide forward and 42" wide rearward compartmentation. Includes (1) 56" wide compartment over the wheel well.	$9,730
3120-0196	Officer side body with full height 48" wide forward and 48" wide rearward compartmentation. Includes (1) 56" wide compartment over the wheel well.	$10,410
3120-0197	Officer side body with full height 60" wide forward and 42" wide rearward compartmentation. Includes (1) 33" wide compartment over the wheel well and (1) Zico Overhead Ladder Rack.	$16,937
3120-0198	Officer side body with full height 60" wide forward and 42" wide rearward compartmentation. Includes (1) 56" wide compartment over the wheel well and one (1) storage tunnel.	$13,552
3120-0199	Officer side body with full height 60" wide forward and 42" wide rearward compartmentation. Includes (1) 56" wide compartment over the wheel well.	$11,140

3120-0200	Officer 3/4 side body with full height 36" wide rearward compartmentation. Includes (1) 56" wide compartment over the wheel well and 30 degree angle of departure.	$7,202
3120-0201	Officer 3/4 side body with full height 36" wide rearward compartmentation. Includes (1) 56" wide compartment over the wheel well.	$4,228
3120-0202	Officer full height side body with upper and lower compartmentation. Includes 42" wide forward and 42" wide rearward lower compartments and (3) opening upper compartments. For use with ladder storage thru tank.	$9,465
3120-0203	Officer side body with full height 42" wide forward and 42" wide rearward compartmentation. Includes (1) 56" wide compartment over the wheel well.	$9,094
3120-0204	Officer full height side body with upper and lower compartmentation. Includes 48" wide forward and 48" wide rearward lower compartments and (3) opening upper compartments. For use with ladder storage thru tank.	$10,100
3120-0205	Officer side body with full height 48" wide forward and 48" wide rearward compartmentation. Includes (1) 56" wide compartment over the wheel well.	$9,730
3120-0206	Officer side body with full height 42" wide forward and 56" wide rearward extended compartmentation. Includes (1) 56" wide compartment over the wheel well.	$9,613
3120-0207	Officer side body with full height 42" wide forward and 56" wide rearward enhanced extended compartmentation. Includes (1) 56" wide compartment over the wheel well.	$9,851
3120-0208	Officer side body with full height 48" wide forward and 62" wide rearward extended compartmentation. Includes (1) 56" wide compartment over the wheel well.	$10,249
3120-0209	Officer side body with full height 48" wide forward and 62" wide rearward enhanced extended compartmentation. Includes (1) 56" wide compartment over the wheel well.	$10,487
3120-0210	Stainless steel officer 3/4 side body with full height 36" wide forward and 48" wide rearward compartmentation (interior). Includes (1) 60" wide compartment over the wheel well.	$10,738
3120-0211	Stainless steel officer 3/4 side body with full height 48" wide forward and 48" wide rearward compartmentation (interior). Includes (1) 60" wide compartment over the wheel well.	$11,281
3120-0212	Stainless steel officer 3/4 side body with full height 60" wide forward and 60" wide rearward compartmentation (interior). Includes (1) 60" wide compartment over the wheel well.	$12,365
3120-0213	Stainless steel officer 3/4 side body with full height 48" wide forward and 60" wide rearward compartmentation (interior). Includes (1) 60" wide compartment over the wheel well.	$11,822
3120-0214	Stainless steel officer side body with full height 36" wide forward and 48" wide (interior) rearward compartmentation. Includes (1) 45" wide (interior) compartment over the wheel well and (1) Zico Overhead Ladder Rack.	$16,378
3120-0215	Stainless steel officer side body with full height 48" wide forward and 48" wide (interior) rearward compartmentation. Includes (1) 45" wide (interior) compartment over the wheel well and (1) Zico Overhead Ladder Rack.	$17,828
3120-0216	Stainless steel officer side body with full height 60" wide forward and 60" wide (interior) rearward compartmentation. Includes (1) 45" wide (interior) compartment over the wheel well and (1) Zico Overhead Ladder Rack.	$18,630
3120-0217	Stainless steel officer side body with full height 48" wide forward and 60" wide (interior) rearward compartmentation. Includes (1) 45" wide (interior) compartment over the wheel well and (1) Zico Overhead Ladder Rack.	$18,363
3120-0218	Stainless steel officer side body with full height 36" wide forward and 48" wide rearward (interior) compartmentation. Includes (1) 60" wide compartment over the wheel well. For use with in the hosebed ladder storage.	$10,002
3120-0219	Stainless steel officer side body with full height 48" wide forward and 48" wide rearward (interior) compartmentation. Includes (1) 60" wide compartment over the wheel well. For use with in the hosebed ladder storage.	$11,452
3120-0220	Stainless steel officer side body with full height 48" wide forward and 60" wide rearward (interior) compartmentation. Includes (1) 60" wide compartment over the wheel well. For use with in the hosebed ladder storage.	$11,796
3120-0221	Stainless steel officer side body with full height 60" wide forward and 60" wide rearward (interior) compartmentation. Includes (1) 60" wide compartment over the wheel well. For use with in the hosebed ladder storage.	$11,452
3120-0222	Stainless steel officer side body with full height 36" wide forward and 48" wide (interior) rearward compartmentation. Includes (1) 60" wide compartment over the wheel well and one (1) ladder storage tunnel and access door at rear with push-button latch.	$12,995
3120-0223	Stainless steel officer side body with full height 48" wide forward and 48" wide (interior) rearward compartmentation. Includes (1) 60" wide compartment over the wheel well and one (1) ladder storage tunnel and access door at rear with push-button latch.	$14,443
3120-0224	Stainless Steel Officer side body with full height 48" wide forward and 60" wide (interior) rearward compartmentation. Includes (1) 60" wide compartment over the wheel well and one (1) ladder storage tunnel and access door at rear with push-button latch.	$15,166
3120-0225	Stainless steel officer side body with full height 60" wide forward and 60" wide (interior) rearward compartmentation. Includes (1) 60" wide compartment over the wheel well and one (1) ladder storage tunnel and access door at rear with push-button latch.	$15,245
3120-0226	Officer side body with full height 36" wide forward and 36" wide rearward compartmentation. Includes (1) 56" wide compartment over the wheel well.	$9,048
3120-0227	Officer 3/4 side body with full height 60" wide forward and 42" wide rearward compartmentation. Includes (1) 56" wide compartment over the wheel well.	$6,508
3120-0228	Officer 3/4 side body with upper and lower compartmentation. Includes 60" wide forward and 42" wide rearward lower compartments and (3) opening upper compartments.	$6,904
3120-0229	Officer side body with full height 60" wide forward and 42" wide rearward compartmentation. Includes (1) 56" wide compartment over the wheel well.	$10,410
3120-0230	Officer full height side body with upper and lower compartmentation. Includes 60" wide forward and 42" wide rearward lower compartments and (3) opening upper compartments. For use with ladder storage thru tank.	$10,807

3120-0231	Officer side body with full height 60" wide forward and 42" wide rearward compartmentation. Includes (1) 33" wide compartment over the wheel well and (1) Zico Overhead Ladder Rack.	$15,527
3120-0232	Officer side body with full height 36" wide forward and 36" wide rearward compartmentation. Includes (1) 56" wide compartment over the wheel well.	$8,508
3120-0234	Officer side body with full height 48" wide forward and 48" wide rearward compartmentation. Includes (1) 56" wide compartment over the wheel well.	$10,410
3120-0236	Overhead Ladder Rack to be offset forward includes shifting compartment (rearward) over the wheel well.	$502
3120-0238	Officer full height side body with upper and lower compartmentation. Includes 36" wide forward and 36" wide rearward lower compartments and (2) opening upper compartments. Includes (1) Zico Overhead Ladder Rack mounted centered between upper compartments.	$16,887
3120-0239	Officer side compartment top storage box (PR). Locate one forward and one rearward of the ladder rack. Boxes to be smooth plate and painted job color with diamond plate tops. The rearward box to have a rear vertically hinged door with push-button latch. Boxes to have (1) diamond plate lid each with push button latch.	$1,575
3120-0240	Officer 3/4 side body with upper and lower compartmentation. Includes 24" wide forward and 36" wide rearward lower compartments and (2) opening upper compartments.	$5,011
3120-0241	Compartment R1 to have rescue style interior compartment height.	$1,260
3120-0242	Officer side tunnel to hold: (1) 1500 gallon Fol-da-tank.	$527
3120-0243	Officer 3/4 side body with full height 42" wide forward and 48" wide rearward compartmentation. Includes (1) 56" wide compartment over the wheel well.	$5,684
3120-0244	Officer side body with full height 30" wide forward and 50" wide rearward extended compartmentation. Includes (1) 56" wide compartment over the wheel well and (1) 2-Arm Ladder Rack. The ladder rack is to be sanded DA finish and includes amber lights on each end to visually indicate when the rack is in motion.	$24,719
3120-0245	Officer side body with full height 24" wide forward and 36" wide rearward compartmentation. Includes (1) 56" wide compartment over the wheel well.	$7,424
3120-0246	Officer side body with full height 30" wide forward and 36" wide rearward compartmentation. Includes (1) 56" wide compartment over the wheel well.	$7,943
3120-0247	Officer side body with full height 24" wide forward and 50" wide rearward extended compartmentation. Includes (1) 56" wide compartment over the wheel well.	$7,943
3120-0248	Officer side body with full height 30" wide forward and 50" wide rearward extended compartmentation. Includes (1) 56" wide compartment over the wheel well.	$8,464
3120-0249	Officer side body with full height 36" wide forward and 50" wide rearward extended compartmentation. Includes (1) 56" wide compartment over the wheel well.	$9,017
3120-0250	Officer side body with full height 24" wide forward and 50" wide rearward enhanced extended compartmentation. Includes (1) 56" wide compartment over the wheel well.	$8,181
3120-0251	Officer side body with full height 30" wide forward and 50" wide rearward enhanced extended compartmentation. Includes (1) 56" wide compartment over the wheel well.	$8,700
3120-0252	Officer side body with full height 36" wide forward and 50" wide rearward enhanced extended compartmentation. Includes (1) 56" wide compartment over the wheel well.	$9,255
3120-0254	Officer side body with full height 52" wide forward and 52" wide rearward compartmentation. Includes (1) 56" wide compartment over the wheel well.	$10,410
3120-0255	Officer side body with full height 36" wide forward and 50" wide rearward compartmentation. Includes (1) 56" wide compartment over the wheel well.	$9,255
3120-0256	Officer side body with full height 30" wide forward and 50" wide rearward compartmentation. Includes (1) 56" wide compartment over the wheel well.	$8,700
3120-0257	Officer side body with full height 24" wide forward and 50" wide rearward compartmentation. Includes (1) 56" wide compartment over the wheel well.	$8,181
3120-0258	Officer 3/4 side body with full height 24" wide forward and 50" wide rearward compartmentation. Includes (1) 56" wide compartment over the wheel well.	$5,398
3120-0259	Officer 3/4 side body with full height 30" wide forward and 50" wide rearward compartmentation. Includes (1) 56" wide compartment over the wheel well.	$5,721
3120-0260	Officer 3/4 side body with full height 36" wide forward and 50" wide rearward enhanced extended compartmentation. Includes (1) 56" wide compartment over the wheel well.	$6,068
3120-0261	Officer half side body with 24" wide forward and 50" wide rearward compartmentation. Includes adjustable ladder tracks.	$4,470
3120-0262	Officer half side body with 30" wide forward and 50" wide rearward compartmentation. Includes adjustable ladder tracks.	$4,729
3120-0263	Officer half side body with 36" wide forward and 50" wide rearward enhanced extended compartmentation. Includes adjustable ladder tracks.	$5,007
3120-0264	Officer side body with full height 24" wide forward and 50" wide rearward compartmentation. Includes (1) 33" wide compartment over the wheel well and (1) Zico Overhead Ladder Rack.	$13,599
3120-0265	Officer side body with full height 30" wide forward and 50" wide rearward compartmentation. Includes (1) 33" wide compartment over the wheel well and (1) Zico Overhead Ladder Rack.	$14,118
3120-0266	Officer side body with full height 36" wide forward and 50" wide rearward compartmentation. Includes (1) 33" wide compartment over the wheel well and (1) Zico Overhead Ladder Rack.	$14,673
3120-0268	Officer side body with full height 42" wide forward and 56" wide rearward compartmentation. Includes (1) 56" wide compartment over the wheel well.	$9,810
3120-0269	Officer side body with full height 36" wide forward and 42" wide rearward compartmentation. Includes (1) 56" wide compartment over the wheel well and one (1)ladder storage tunnel and access door at rear.	$12,141
3120-0270	Officer side body with full height 42" wide forward and 56" wide rearward compartmentation. Includes (1) 33" wide compartment over the wheel well and (1) Zico Overhead Ladder Rack.	$15,031
3120-0271	Officer 3/4 side body with full height 42" wide forward and 56" wide rearward enhanced extended compartmentation. Includes (1) 56" wide compartment over the wheel well.	$6,441
3120-0272	Officer half side body with 42" wide forward and 56" wide rearward enhanced extended compartmentation. Includes adjustable ladder tracks.	$5,305

3120-0273	Officer side body with full height 36" wide forward and 50" wide rearward enhanced extended compartmentation. Includes (1) 20" wide compartment over the wheel well and (1) E-One center mounted Overhead Ladder Rack.	$14,673
3120-0274	Officer side body with full height 36" wide forward and 50" wide rearward enhanced extended compartmentation. Includes (1) 56" wide compartment over the wheel well.	$9,840
3120-0275	Officer side body with full height 42" wide forward and 56" wide rearward enhanced extended compartmentation. Includes (1) 56" wide compartment over the wheel well.	$10,476
3120-0276	Officer side body with full height 48" wide forward and 62" wide rearward enhanced extended compartmentation. Includes (1) 56" wide compartment over the wheel well.	$11,157
3120-0277	Officer side body with full height 60" wide forward and 56" wide rearward enhanced extended compartmentation. Includes (1) 56" wide compartment over the wheel well.	$11,886
3120-0278	Officer side body with full height 36" wide forward and 50" wide rearward enhanced extended compartmentation. Includes (1) 33" wide compartment over the wheel well and (1) Zico Overhead Ladder Rack.	$15,635
3120-0279	Officer side body with full height 42" wide forward and 56" wide rearward enhanced extended compartmentation. Includes (1) 33" wide compartment over the wheel well and (1) Zico Overhead Ladder Rack.	$16,273
3120-0280	Officer side body with full height 48" wide forward and 62" wide rearward enhanced extended compartmentation. Includes (1) 33" wide compartment over the wheel well and (1) Zico Overhead Ladder Rack.	$16,954
3120-0281	Officer side body with full height 60" wide forward and 56" wide rearward enhanced extended compartmentation. Includes (1) 33" wide compartment over the wheel well and (1) Zico Overhead Ladder Rack.	$17,682
3120-0282	Officer side body with full height 36" wide forward and 50" wide rearward enhanced extended compartmentation. Includes (1) 56" wide compartment over the wheel well and one (1) storage tunnel.	$12,252
3120-0283	Officer side body with full height 42" wide forward and 56" wide rearward enhanced extended compartmentation. Includes (1) 56" wide compartment over the wheel well and one (1) storage tunnel.	$12,889
3120-0284	Officer side body with full height 48" wide forward and 62" wide rearward enhanced extended compartmentation. Includes (1) 56" wide compartment over the wheel well and one (1) storage tunnel.	$13,569
3120-0285	Officer side body with full height 60" wide forward and 56" wide rearward enhanced extended compartmentation. Includes (1) 56" wide compartment over the wheel well and one (1) storage tunnel.	$14,298
3120-0286	Officer 3/4 side body with full height 30" wide forward and 36" wide rearward compartmentation. Includes (1) 56" wide compartment over the wheel well.	$4,771
3120-0287	Officer side body with upper and lower compartmentation. Includes 24" wide forward and 36" wide rearward lower compartments and (2) opening upper compartments. Includes (1) Zico Overhead Ladder Rack centered mounted between upper compartments.	$13,213
3120-0288	Officer full height side body with upper and lower compartmentation. Includes 42" wide forward and 42" wide rearward lower compartments and (2) opening upper compartments. Includes (1) Zico Overhead Ladder Rack mounted centered between upper compartments.	$14,882
3120-0290	Officer side body with full height 30" wide forward and 50" wide rearward enhanced extended compartmentation. Includes (1) 56" wide compartment over the wheel well and one (1) ladder storage tunnel and access door at rear.	$11,660
3120-0291	Officer side body with full height 50" wide forward and 50" wide rearward enhanced extended compartmentation. Includes (1) 33" wide compartment over the wheel well and (1) Zico Overhead Ladder Rack.	$16,273
3120-0292	Officer side body with full height 56" wide forward and 56" wide rearward enhanced extended compartmentation. Includes (1) 33" wide compartment over the wheel well and (1) Zico Overhead Ladder Rack.	$16,953
3120-0293	Officer side body with full height 62" wide forward and 62" wide rearward enhanced extended compartmentation. Includes (1) 33" wide compartment over the wheel well and (1) Zico Overhead Ladder Rack.	$17,632
3120-0294	Officer side body with full height 50" wide forward and 50" wide rearward enhanced extended compartmentation. Includes (1) 56" wide compartment over the wheel well.	$10,476
3120-0295	Officer side body with full height 56" wide forward and 56" wide rearward enhanced extended compartmentation. Includes (1) 56" wide compartment over the wheel well.	$11,157
3120-0296	Officer side body with full height 62" wide forward and 62" wide rearward enhanced extended compartmentation. Includes (1) 56" wide compartment over the wheel well.	$11,836
3120-0297	Officer side body with full height 50" wide forward and 50" wide rearward enhanced extended compartmentation. Includes (1) 56" wide compartment over the wheel well and one (1) ladder storage tunnel and access door at rear.	$12,889
3120-0298	Officer side body with full height 56" wide forward and 56" wide rearward enhanced extended compartmentation. Includes (1) 56" wide compartment over the wheel well and one (1) ladder storage tunnel and access door at rear.	$13,568
3120-0299	Officer side body with full height 62" wide forward and 62" wide rearward enhanced extended compartmentation. Includes (1) 56" wide compartment over the wheel well and one (1) ladder storage tunnel and access door at rear.	$14,247
3120-0300	Officer side body with full height 42" wide forward and 56" wide rearward enhanced extended compartmentation. Includes (1) 56" wide compartment over the wheel well and one (1) storage tunnel and access door at rear.	$12,889
3120-0301	Officer side tunnel to hold: [#LOC].	$527
3120-0302	Officer half side body with 42" wide forward and 42" wide rearward compartmentation.	$4,547
3120-0303	Officer side body with full height 36" wide forward and 36" wide rearward compartmentation. Includes (1) 56" wide compartment over the wheel well and 30 degree angle of departure.	$8,786
3120-0304	Officer side body with full height 62" wide forward and 62" wide rearward enhanced extended compartmentation. Includes (1) 56" wide compartment over the wheel well.	$11,126
3120-0305	Stainless steel officer side body with full height 48" wide forward and 48" wide (interior) rearward compartmentation. Includes (1) 60" wide compartment over the wheel well and one (1) ladder storage tunnel and access door at rear with push-button latch. Upper area of ladder storage to have stop at 8' and be used for misc. storage.	$14,698
3120-0307	Officer side body with full height 24" wide forward and 56" wide rearward extended compartmentation. Includes (1) 33" wide compartment over the wheel well and (1) Zico Overhead Ladder Rack.	$14,175
3120-0308	Officer side body with full height 24" wide forward and 50" wide rearward enhanced extended compartmentation. Includes (1) 56" wide compartment over the wheel well and one (1) ladder storage tunnel and access door at rear.	$13,411

3120-0309	Officer side body with upper and lower compartmentation. Includes 36" wide forward and 50" wide rearward extended lower compartmentation and (2) opening upper compartments with (1) Zico Overhead Ladder Rack centered between the compartments.	$17,443
3120-0310	Officer side body with full height 36" wide forward and 36" wide rearward compartmentation. Includes (1) 33" wide compartment over the wheel well, one (1) storage tunnel and (1) Zico Overhead Ladder Rack.	$17,301
3120-0311	Officer side body with full height 42" wide forward and 42" wide rearward compartmentation. Includes (1) 33" wide compartment over the wheel well, one (1) storage tunnel and (1) Zico Overhead Ladder Rack.	$17,938
3120-0312	Officer side body with full height 48" wide forward and 48" wide rearward compartmentation. Includes (1) 33" wide compartment over the wheel well, one (1) storage tunnel and (1) Zico Overhead Ladder Rack.	$18,619
3120-0313	Officer side body with full height 60" wide forward and 42" wide rearward compartmentation. Includes (1) 33" wide compartment over the wheel well, one (1) storage tunnel and (1) Zico Overhead Ladder Rack.	$19,348
3120-0314	Officer side body with full height 36" wide forward and 50" wide rearward enhanced extended compartmentation. Includes (1) 33" wide compartment over the wheel well, one (1) storage tunnel and (1) Zico Overhead Ladder Rack.	$18,046
3120-0315	Officer side body with full height 42" wide forward and 56" wide rearward enhanced extended compartmentation. Includes (1) 33" wide compartment over the wheel well, one (1) storage tunnel and (1) Zico Overhead Ladder Rack.	$18,684
3120-0316	Officer side body with full height 48" wide forward and 62" wide rearward enhanced extended compartmentation. Includes (1) 33" wide compartment over the wheel well, one (1) storage tunnel and (1) Zico Overhead Ladder Rack.	$19,365
3120-0317	Officer side body with full height 60" wide forward and 56" wide rearward enhanced extended compartmentation. Includes (1) 33" wide compartment over the wheel well, one (1) storage tunnel and (1) Zico Overhead Ladder Rack.	$20,093
3120-0318	Officer side body with full height 36" wide forward and 50" wide rearward enhanced extended compartmentation (2008 body design) with (1) 56" wide compartment over the wheel well and one (1) storage tunnel.	$16,697
3120-0319	Officer half side body with 20" wide forward and 50" wide rearward extended compartmentation. Includes adjustable ladder tracks.	$4,144
3125-0001	Mid-Engine module with 58" wide opening. Forward area of module to have double stacked double crosslays to hold up to 200' of 2.0" DJ (each).	$8,178
3125-0002	Mid engine side access doors (PR) painted job color. Painted surface does not include expanded metal inserts.	$1,226
3125-0003	Mid engine side access doors (PR) diamond plate.	$1,067
3130-0003	Pump module. Includes 39" wide pump panel opening and running boards.	$4,337
3130-0004	Pump module. Includes 45" wide pump panel opening and running boards.	$4,337
3130-0005	Pump module. Includes 51" wide pump panel opening and running boards.	$4,337
3130-0006	Pump module. Includes 57" wide pump panel opening and running boards.	$4,337
3130-0007	Crosswalk module.Includes running boards, (1) folding step each side and access handrails mounted on the pump module.	$853
3130-0008	Crosswalk module. Includes walkway storage compartments with push button latches, running boards, (1) folding step each side and access handrails mounted on the pump module.	$1,245
3130-0009	Speedlay module. Includes area for (2) speedlays with trays, (1) area for dry storage, lower storage compartments with push button latches and running boards.	$1,493
3130-0010	Transverse Module (narrow). Locate forward of pump area. Includes a single compartment opening per side (with a shallow lower area and a transverse upper area with diamond plate flooring) and running boards.	$1,910
3130-0011	Transverse Module (full width). Locate forward of pump area. Includes a single compartment opening per side (with a shallow lower area and a transverse upper area with smooth plate flooring).	$2,644
3130-0012	Upper SM pump module with double stacked double crosslays and diamond plate storage pan.	$1,277
3130-0013	Upper SM pump module with single stacked double crosslays and diamond plate storage pan.	$1,277
3130-0014	Upper SM pump module with single stacked triple crosslays and diamond plate storage pan.	$1,602
3130-0015	Upper SM pump module with single stacked double crosslay, backboard storage and diamond plate storage pan.	$2,178
3130-0016	Upper TM pump module with double stacked double crosslays.	$1,425
3130-0017	Upper TM pump module with single stacked double crosslays.	$1,425
3130-0018	Upper TM pump module with single stacked double crosslays and backboard storage.	$2,293
3130-0020	Upper TM pump module with diamond plate storage pan.	$1,493
3130-0021	Upper TM pump module with backboard storage and diamond plate storage pan.	$1,830
3130-0022	Speedlay module. Includes area for (2) speedlays with trays, (1) area for backboard storage with hinged doors with latches, lower storage compartments with push button latches and running boards.	$2,363
3130-0023	Speedlay module. Includes area for (3) speedlays with trays, lower storage compartments with push button latches and running boards.	$1,818
3130-0024	Upper SM pump module with diamond plate storage pan (only).	$1,386
3130-0030	Stainless steel pump module. Includes 39" wide pump panel opening and running boards.	$5,423
3130-0031	Stainless steel pump module. Includes 45" wide pump panel opening and running boards.	$5,423
3130-0032	Stainless steel pump module. Includes 51" wide pump panel opening and running boards.	$5,423
3130-0033	Stainless steel pump module. Includes 57" wide pump panel opening and running boards.	$5,423
3130-0055	Stainless steel speedlay module. Includes area for (3) speedlays with trays, lower storage compartments with push button latches and running boards.	$2,272
3130-0062	Upper SM pump module with quad single stacked crosslays and diamond plate storage pan.	$1,927
3130-0063	Upper SM pump module with quad single stacked crosslays and diamond plate storage pan. The rear crosslay is for dry hose storage.	$1,927
3130-0064	Upper stainless steel SM pump module with quad single stacked crosslays and diamond plate storage pan.	$2,409
3130-0065	Upper stainless steel SM pump module with quad single stacked crosslays and diamond plate storage pan. The rear crosslay is for dry hose storage.	$2,409
3130-0067	Upper TM pump module with single stacked triple crosslays. Includes (2) dividers.	$1,585
3130-0068	Upper TM pump module with single stacked triple crosslays and backboard storage.	$2,742

3130-0069	Upper SM pump module with double stacked triple dry crosslays. Crosslay floor to be hinged and accessed from driver side. Include gas shocks, hold open rod, adj tracks and (2) dividers w/handhold cut-outs on both ends.	$4,000
3130-0070	Pump module. Includes lowered area for lowered upper module and 45" wide pump panel opening and running boards.	$5,423
3130-0071	Upper SM pump module with single stacked triple crosslay, backboard storage and diamond plate storage pan.	$2,503
3130-0083	Speedlay module. Includes area for triple speedlays with divider(s) and lower storage compartments with push button latches and running boards.	$1,818
3130-0084	Speedlay module to have (2) dividers for a triple speedlay configuration. Each divider to be notched for preconnect nozzles. Preconnect plumbing to be internal to the speedlay.	$331
3130-0085	Upper TM pump module with single stacked 2.5" crosslay and 2.5" double single stacked dry crosslay.	$2,293
3130-0086	Driver side SM module extension for vertical exhaust. Includes forward extended running board.	$238
3130-0088	Speedlay module to have (1) divider for a double configuration. The divider is to be held short for preconnect nozzle. Preconnect plumbing to be internal to the speedlay. Rearward area to be for backboard storage and includes vertically hinged doors with push-button latching.	$619
3130-0089	Upper SM pump module with (5) single stacked crosslays- (4) 1.5" AND (1) 2.5" rearward. Includes open back style pan for generator.	$2,217
3130-0090	Pump module. Includes 63" wide pump panel opening and running boards.	$4,337
3130-0095	Crosswalk module.Includes walkway storage compartments with push button latches, running boards, (1) diamond plate gator grip step each side and access handrails mounted on the pump module.	$1,438
3130-0096	Speedlay module(stacked). Includes area for (2) stacked speedlays and (1) upper speedlay (crosslay style), lower storage compartments with push button latches and running boards. Lower speedlay, upper speedlay and crosslay.	$2,029
3130-0098	Speedlay module full width. Includes area for (4) speedlays, (2) speedlays (stacked) per side with partition in center of module. Includes lower storage compartments with push button latches.	$3,304
3130-0099	Pump module. Includes 45" wide pump panel opening and running boards. Interior of module to have 70" width.	$4,337
3130-0100	Upper SM pump module with triple single stacked crosslays and diamond plate storage pan. Module is for use with a wider lower module base. To include a non-stepped pan with 1.5" extrusion rearward and narrow crosslay widths.	$1,602
3130-0101	Upper SM pump module with single stacked double crosslay, backboard storage and diamond plate storage pan. Interior to be 70" wide to match lower module.	$2,178
3130-0102	Speedlay module(stacked). Includes area for (2) speedlays, lower storage compartments with push button latches and running boards.	$1,818
3130-0103	Speedlay module. Includes area for (2) speedlays with center divider, lower storage compartments with push button latches and running boards.	$1,493
3130-0104	Top mount enclosed pump module. Includes full width single crosslay, backboard storage and storage pan with push button latches and enclosed side pump panels with AM Roll-Up Doors.	$12,241
3130-0106	Upper pump module. Includes double, double stacked crosslay area (rearward of module). Forward area to have storage for tools and backboards (horizontally stored). To include diamond plate hinged doors on sides (vertically hinged). The upper are is to have a diamond plate top.	$4,209
3130-0107	Speedlay module. Includes area for (2) speedlays with dividers, (1) area for backboard storage with hinged doors with latches, lower storage compartments with push button latches and running boards.	$2,363
3130-0108	Upper TM pump module with double stacked triple crosslays (single stack depth).	$2,293
3130-0111	Upper SM pump module with single stacked triple crosslay, backboard storage and diamond plate storage pan.	$3,129
3130-0113	TM Pump Module. Includes triple crosslay area (crosslays to be 4.25"-divider-4.25"-divider-4.25" dry lay with stops provided, bottom of crosslay to be max of 60.5" from ground level with air suspension lowered. In reference to stops provided. Preconnect 1 will be enclosed on driver's side and preconnect 2 will be enclosed on officer's side). Walkway on this module is wider front to rear than standard and the walkway is incorporated into the main module. Driver and Officer runningboard hose trays to be angled and "floating" style..	$7,482
3130-0114	Pump module. Includes 51" wide pump panel opening and running boards. Interior of module to have 70" width.	$4,412
3130-0115	Upper SM pump module with single stacked double crosslays and diamond plate storage pan. Interior of module to have 70" width.	$1,277
3130-0116	Pump module. Includes 39" wide pump panel opening and running boards. Interior of module to have 70" width.	$4,412
3130-0119	Upper TM pump module with diamond plate storage pan. Interior to be 70" wide to match lower module.	$1,493
3130-0120	Crosswalk module.Includes running boards, (1) folding step each side and access handrails mounted on the pump module. Interior to be 70" to match lower module.	$853
3130-0121	Crosswalk module.Includes walkway storage compartments with push button latches, running boards, (1) folding step each side and access handrails mounted on the pump module.Interior to be 70" wide to match lower module.	$1,245
3130-0125	Upper SM pump module with triple single stacked crosslays and diamond plate storage pan. Interior to be 70" wide to match lower module.	$1,602
3130-0127	Upper TM pump module with single stacked double crosslays. Interior to be 70' wide to match lower module.	$1,425
3130-0155	Upper TM pump module with single stacked triple crosslays. Includes (2) dividers. Interior to be 70" to match lower module.	$1,585
3130-0164	Upper SM pump module with double stacked triple crosslays (single stacked depth) and diamond plate storage pan.	$3,708
3130-0165	Upper SM pump module with (5) single stacked crosslays. (4) single stacked 1.5" crosslays, (1) single stacked 2.5" crosslay rearward and diamond plate storage pan.	$2,217
3130-0168	Upper SM pump module with triple single stacked crosslays and wide dry crosslay storage area. The area rearward of crosslays is for deck gun channel.	$6,524
3130-0169	Transverse module to hold: Lower section (1) Stokes basket and (2) backboards. Upper section to hold miscellaneous long handled tools.	$527
3130-0172	Upper SM pump module with triple stacked double crosslays and diamond plate storage pan.	$2,293
3130-0173	Stainless steel speedlay module. Includes area for (2) speedlays with center divider, lower storage compartments with push button latches and running boards.	$1,868

3130-0174	Pump module for top mount enclosed operation. Includes 57" panel opening and area for double stacked double crosslay with storage pan. Module has sanded finish and crosslay floors are slotted for draining.	$8,615
3130-0175	Raised crosswalk module. Includes walkway storage compartments with push button latches, running boards, (1) diamond plate walkway step w/gator grip each side and access handrails mounted on the pump module. Includes 8" raise with 5" high storage compartment with drop down diamond plate doors with push button latches.	$2,411
3130-0176	Upper TM pump module with double stacked double crosslays with backboard storage.	$3,005
3130-0177	Upper SM pump module with backboard storage and diamond plate storage pan. Backboard storage to be located rearward of storage pan. Deck gun channel to be located between pan and back board compartment.	$2,095
3130-0179	Speedlay module(stacked). Includes area for (2) stacked speedlays and (1) upper storage compartment, lower storage compartments with push button latches and running boards. Lower 1.75 speedlay and upper 2.5 speedlay. Single diamond plate cover for upper storage area. Includes (1) grab handle and (2) hold downs.	$3,152
3130-0180	Transverse Module (narrow). Locate forward of pump area. Includes a single compartment opening per side (with a shallow lower area and a transverse upper area with diamond plate flooring) and running boards. Upper area for single stacked triple crosslay.	$3,451
3130-0181	Pump/Speedlay Module. Includes area for runningboards, upper side stainless steel panels, (2) removable speedlay trays and upper dunage storage pan.	$10,006
3130-0182	Upper SM pump module with triple crosslays (single stacked depth) and diamond plate storage pan. Forward crosslays to be double stacked and rearward crosslay to be single stacked dry lay.	$4,033
3130-0183	Upper SM pump module with double stacked triple crosslays and diamond plate storage pan. Upper module to be full width as applicable to match lower module.	$3,852
3130-0184	Pump module top mount with speedlays. Includes 41" wide pump panel opening, dunnage pan and running boards. Raised top mount walkway includes storage compartments with D-Ring latches, (1) 5" diamond plate top mount walkway step with gator grip each side and access handrails mounted on the pump module. Raised walkway for backboard storage includes diamond plate door with push button latches. Includes area for (2) speedlays with 1.5" plumbing. Driver and Officer side upper pump access panels to be horizontally hinged with diamond plate doors. Includes (2) D-Ring latches and (2) gas shock hold opens for each.	$8,563
3130-0186	Upper TM pump module with double stacked single 2.5" crosslay. Includes area for dry crosslay storage rearward of 2.5".	$2,293
3130-0187	Upper SM pump module with triple single stacked crosslays and diamond plate storage pan. Each crosslay to be 6" wide for nozzle storage.	$3,708
3130-0188	Upper TM pump module with single stacked quad crosslays. Includes (3) dividers.	$1,745
3130-0189	Upper SM pump module with backboard storage and diamond plate storage pan. Backboard storage to be located forward of storage pan.	$2,095
3130-0196	Upper SM pump module with single stacked double crosslay, backboard storage and diamond plate storage pan. Backboard storage opening to be 6.5" wide.	$3,758
3130-0197	Upper SM pump module with double stacked double crosslay, backboard storage and diamond plate storage pan.	$4,285
3130-0198	Upper TM pump module with single stacked double crosslays. Each crosslay to hold 100' of 3" DJ.	$3,531
3130-0199	Upper SM pump module with single stacked triple crosslays and diamond plate storage pan. (2) Backboard and Ferno model 6 or EXL scoop stretcher storage box located below the storage pan with lift-up diamond plate door with thumb latches each side. Upper module to be full width as applicable to match lower module.	$4,753
3130-0200	Transverse Module (narrow). Locate forward of pump area. Includes a single compartment opening per side (with a shallow lower area and a transverse upper area with diamond plate flooring) and running boards. Upper area for single stacked quad crosslay. Plumbing to terminate thru outboard extrusion as follows: #1 driver side, #2 officer side, #3 driver side and #4 officer side.	$5,070
3130-0201	Upper SM pump module with 2.5" double stacked double crosslay and diamond plate storage pan. Both preconnects to be offset to officer side of module.	$4,436
3130-0202	Speedlay module(stacked). Includes area for (3) speedlays, lower storage compartments with push button latches and running boards.	$2,029
3130-0204	Pump module for top mount enclosed operation. Includes 47" panel opening, area for double stacked single crosslay, area for double stacked double speedlay with trays stacked side by side, lower storage compartments with D-ring latches and running boards. Crosslay floor to be slotted for draining. Includes backboard storage forward of crosslay. Includes deck gun channel and open back storage pan rearward of crosslay.	$11,161
3130-0205	Upper TM pump module with backboard storage and diamond plate storage pan. Backboard storage located rearward of storage pan.	$1,830
3130-0206	Upper SM pump module with 2.5" double stacked double crosslays and diamond plate storage pan.	$3,960
3130-0207	Transverse Module (narrow). Locate forward of pump area. Includes a single compartment opening per side (with a shallow lower area and a transverse upper area with diamond plate flooring) and running boards. Upper area for double stacked double crosslay.	$3,978
3130-0208	Pump/Speedlay Module. Includes area for E-ONE supplied runningboards, (2) removable speedlay trays and upper diamond plate panels/doors for access to (2) horizontally stored backboards.	$10,392
3130-0209	Crosswalk module. Includes walkway storage compartments with D-ring latches, running boards, (1) folding step each side and access handrails mounted on the pump module.	$1,500
3130-0210	Speedlay module. Includes area for (2) speedlays with trays, (1) area for backboard storage with hinged doors with latches, lower storage compartments with D-ring latches and running boards. Speedlays to hold 250' of 1.75" DJ hose.	$2,976
3130-0211	Upper SM pump module with quad single stacked crosslays and diamond plate storage pan. Preconnects to located as follows: Preconnects 1 and 3 to be offset to officer side, Preconnects 2 and 4 to be offset to driver side. Crosslays to be 66" high from ground. Includes diamond plate access door on officer side of module with push button latches.	$3,506
3130-0212	Pump module. Includes 57" wide pump panel opening and running boards. Crosslays to be 66" high from ground.	$5,390

3130-0215	Transverse Module (full width). Locate forward of pump area. Includes a single compartment opening per side (with a shallow lower area and a transverse upper area with diamond plate flooring). Upper area for double stacked double crosslay.	$3,435
3130-0216	Upper SM pump module with double stacked triple crosslays and diamond plate storage pan.	$5,813
3130-0217	Speedlay module(stacked). Includes area for (3) 1.75" speedlays, lower storage compartments with push button latches and running boards. Upper speedlay to be dry lay.	$2,029
3130-0218	Upper TM pump module with 2.5" triple stacked single crosslay.	$3,692
3130-0219	Enclosed Pump Module with Triple Speedlays. Includes 45" wide pump panel opening. Includes area for (3) speedlays with trays, lower storage compartments with push button latches forward of pump panel opening. Upper module area to have storage pan.	$15,435
3130-0220	TM Upper module. Includes wide pan and open back style for special reel requirement.	$3,600
3130-0222	Upper TM pump module with single stacked double crosslays. Rearward crosslay to hold 2.5" DJ hose.	$1,898
3130-0224	Upper TM pump module with single stacked triple crosslays, dunnage storage pan and backboard storage. Storage pan located between T/M panel and backboard storage.	$3,402
3130-0225	Pump module. Includes 45" wide pump panel opening and running boards. Includes area forward of pump panel opening for (2) speedlays (stacked), lower storage compartments with push button latches	$7,364
3130-0226	Upper SM pump module with double stacked double crosslay (single stack depth) and diamond plate storage pan. Built in compartment on officer side of module rearward of crosslays. Compartment dimensions to be approx. 18.5"W x 20"H x 20"D, includes stainless steel door with push button latches. Storage pan to be stepped around compartment. Crosslay divider to be adjustable side to side.	$3,647
3130-0227	Pump module. Includes lowered area for lowered upper module and 51" wide pump panel opening and running boards.	$5,423
3130-0228	Upper SM pump module with single stacked double crosslay, backboard storage and diamond plate storage pan. 2.5" plumbing for rear crosslay.	$2,689
3130-0229	Speedlay module. Includes area for triple speedlays with divider(s) and lower storage compartments with push button latches and running boards.	$2,821
3130-0231	Speedlay module. Includes area for triple speedlays with divider(s) and lower storage compartments with D-ring latches and running boards.	$2,008
3130-0232	Speedlay module(stacked). Includes area for (3) speedlays, lower storage compartments with push button latches and running boards.	$2,475
3130-0233	Speedlay module. Includes area for triple speedlays with divider(s) and lower storage compartments with push button latches and running boards. Forward speedlay to have 2.5" plumbing.	$2,056
3130-0234	Pump module. Includes 45.5" wide pump panel opening and running boards. Lowered to 45.5" high to allow approx 69" high crosslay height from ground.	$5,360
3130-0236	Upper SM pump module with double stacked double crosslays and diamond plate storage pan. Storage pan to be open back style.	$4,127
3130-0237	Upper TM pump module with 2.5" double stacked single crosslay.	$1,425
3130-0238	Speedlay module. 48"H IPO 54.5"H so as not to block rear windows. Includes area for (2) speedlays with center divider, lower storage compartments with push button latches and running boards.	$2,841
3130-0239	Upper TM pump module with single stacked double crosslays and diamond plate storage pan.	$2,086
3130-0240	Pump module. Includes 51" wide pump panel opening and running boards. Forward area of module raised for 4x4 application and tallest lower module height for plumbing application requirements.	$5,422
3130-0242	Speedlay module(stacked). Includes area for (2) stacked speedlays and (1) upper speedlay (crosslay style), lower storage compartments with push button latches and running boards. Lower speedlay, upper speedlay and crosslay. For use with removable or slide-master tray(s).	$2,530
3130-0246	Upper SM pump module with single stacked triple crosslay, backboard storage and diamond plate storage pan. Forward crosslay to be 6" wide and the rearward crosslays to be 6.75" wide.	$3,928
3130-0247	Upper SM pump module with single stacked triple crosslays and diamond plate storage pan. Forward (2) crosslays to be single stack and rearward crosslay to be double stack.	$3,593
3130-0248	Pump module - one piece. Includes 45.5" wide pump panel opening and running boards.	$4,337
3130-0249	Single stacked triple crosslays and diamond plate storage pan. Crosslays 5.5" wide each to hold 200'-1.75"DJ or 150-200'-2.5"DJ.	$1,602
3130-0250	Pump module. Includes 45" wide pump panel opening. Running boards to be smooth plate with gator grip and painted black duraback.	$4,904
3130-0251	Speedlay/crosslay module (stacked). Includes area for (2) speedlays with removable trays (each to hold 200' of 1.75" DJ), upper crosslay for storage of 200' of 2.5" DJ, lower storage compartments with push button latches and running boards.	$6,710
3130-0252	Upper SM pump module with double stacked single crosslay and diamond plate storage pan. Crosslay to be dry lay.	$2,702
3130-0254	Pump module. Includes 75" wide pump panel opening and running boards.	$4,337
3130-0255	Pump/Speedlay Module. Includes area for E-ONE supplied runningboards, (2) removable speedlay trays and upper diamond plate panels/doors for access to (2) horizontally stored backboards.	$5,037
3130-0259	Pump module. Includes 51" wide pump panel opening and running boards. Lowered to allow 70" high crosslay height from ground.	$5,287
3130-0264	Upper SM pump module with single stacked triple crosslays and diamond plate storage pan. Storage pan to be open back style.	$1,602
3130-0265	Transverse Module (narrow). Locate forward of pump area. Includes a single compartment opening per side (with a shallow lower area and a transverse upper area with diamond plate flooring) and running boards. Upper area for triple crosslay, forward (2) crosslays to be single stacked and rearward crosslay to be double stacked.	$4,191
3130-0266	Transverse Module (narrow). Locate forward of pump area. Includes a single compartment opening per side (with a shallow lower area and a transverse upper area with diamond plate flooring) and running boards. Upper area for double stacked double crosslay.	$3,978
3130-0271	Upper SM pump module with single stacked triple crosslays and diamond plate storage pan. Forward (2) crosslays to be single stack and rearward crosslay to be double stack. Crosslay plumbing to be located centered in place of outboard.	$3,593

3130-0273	Pump module. Includes 51" wide pump panel opening and running boards. Crosslays to be 73" high from ground.	$6,237
3130-0274	Upper SM pump module with double stacked (single stack depth) double crosslays and diamond plate storage pan. Front headboard stepped down 5" to allow 18" deep crosslays.	$2,552
3134-0006	The gauge panel on the driver side of the Side Mount module is to be hinged downward. Includes two (2) cable hold opens, and latches.	$116
3134-0009	The gauge panel(s) on the driver side of the Side Mount module to be hinged upward. Includes two (2) gas shock hold opens and latches.	$116
3134-0011	Officer side pump panel to be vertically hinged on forward extrusion. Panel(s) to be secured in the closed position with push button latches. Upper panel to be held open with gas shock.	$434
3134-0013	Driver and Officer side pump panels to be vertically hinged on forward extrusion. Panels to be (2) or (3) pieces, depending on module height, and secured in the closed position with push button latches. Upper panels to be held open with gas shock.	$865
3134-0015	Stainless steel TM control panel, driver and officer side pump panels.	$842
3134-0017	The TM control panel, driver and officer side pump panels are to be painted Zolatone black.	$709
3134-0018	The TM control panel, driver and officer side pump panels are to be painted Zolatone gray.	$709
3134-0019	The driver and officer side pump panels are to be painted Zolatone black.	$552
3134-0020	The driver and officer side pump panels are to be painted Zolatone gray.	$552
3134-0021	Body mainframe and upper body/hosebed side assemblies for a 95" high body.	$1,150
3134-0026	Pump panel support angles. Locate up to (3) horizontally mounted as required on interior side of the main vertically hinged pump panel(s).	$133
3134-0027	TM control panel to be Zolatone gray and driver and officer side panels to be stainless steel.	$499
3134-0028	Pump panel layout and approval drawing to match existing and/or previous unit. To match as close as possible (Engineering and/or vendor requirements may alter final panel layout).	$366
3134-0036	The TM control panel to be painted zolatone black and the driver and officer side pump panels are to be stainless steel.	$922
3134-0042	Pump panels. Driver side upper pump access panel to be horizontally hinged with diamond plate door. Includes (2) push-button latches and (2) hold opens. Officer side pump panel to be vertically hinged on forward extrusion. Panel to be (2) or (3) pieces, depending on module height, and secured in the closed position with push button latches. Upper panel to be held open with gas shock.	$865
3134-0051	Driver and Officer side upper pump access panels to be horizontally hinged with diamond plate doors. Includes (2) D-ring latches and (2) hold opens for each.	$512
3134-0052	Driver side pump panel to be vertically hinged on forward extrusion. Panel to be (2) piece and lower panel to be secured in the closed position with push button latches. Upper panel to be stationary.	$607
3134-0053	Officer side pump panel Escutchion Plate shall be attach with Thumb Latch.	$154
3134-0055	Officer side upper pump access panel to be horizontally hinged with stainless steel door. Includes (2) push button latches and (2) hold open devices.	$182
3134-0056	Driver side panel shall be attach with screw.Officer side pump panels to be vertically hinged on forward extrusion. Panels to be (2) or (3) pieces, depending on module height, and secured in the closed position with push button latches. Upper panels to be held open with gas shock.	$865
3134-0063	The rear mount gauge panel to be hinged upward. Includes (2) mechanical/pneumatic (as applicable to panel size) hold opens and latches.	$138
3134-0064	The gauge panel(s) on the driver side of the Side Mount module to be hinged upward. Panel(s) to include (2) mechanical/pneumatic (as applicable to panel size) hold opens and latches.	$116
3134-0065	Driver and Officer side pump panels. Upper panel to be bolt-on diamond plate panel. Lower pump panel to be vertically hinged on forward extrusion. Panel to be secured in the closed position with push button latches.	$1,214
3134-0066	Officer side upper pump access panel to be horizontally hinged with smooth plate door painted Zolatone black. Includes (2) push button latches and (2) hold open devices.	$552
3136-0000	Air horn switch at pump panel. Switch to be labeled "Evacuation Alert". Location: [#LOC].	$121
3136-0002	Microphone box. Locate at the [#LOC].	$429
3136-0003	Microphone Box Cast Products. Locate at/in the [#LOC].	$400
3136-0004	The lower area of the pump compartment to have a four (4) sided heat pan with two (2) removable (side to side) bottoms. Bottoms to be secured in the closed position with mechanical fasteners.	$876
3136-0005	The crosslay divider(s) to be notched both ends for Task Force Nozzle.	$105
3136-0006	Two (2) pump compartment heaters are to be mounted in the pump area. Locate as low as possible.	$1,425
3136-0007	Two (2) Mansaver Bars- (1) each side. Installed at pump module crosswalk area. The bars are to include [#COL] vinyl covers.	$1,102
3136-0010	Stainless steel roller assemblies for crosslays and/or speedlays.	$253
3136-0011	P-Rubber in flex joint(s) between pump module and/or body modules.	$522
3136-0012	Slat flooring. The crosslay and/or speedlays are to have removable slat flooring.	$321
3136-0013	Additional Booster Reel Roller Assembly. Locate opposite side of booster reel.	$211
3136-0015	(2) vertically mounted booster reel roller assemblies. Locate (1) each side on trailing edge of beavertail/body (as applicable). For use with rear compartment mounted booster reel.	$419
3136-0016	Speedlay module trays mounted to a bi-directional Slide Master tray.	$1,063
3136-0017	Driver side pump enclosure. The driver side lower pump module to be full width and full depth of the module and include area in upper section for mounting of roll-up door.	$2,656
3136-0018	Officer side pump enclosure. The officer side lower pump module to be full width and full depth of the module and include area in upper section for mounting of roll-up door.	$2,656
3136-0023	Microphone Box Cast Products. Locate at/in the [#LOC].	$426
3136-0024	Crosslays to accomadate extra capacity.	$460
3136-0025	Microphone box. Dimensions for microphone box are 14" wide x 6.5" high x 5.5" deep. Locate at the [#LOC].	$472
3136-0026	The crosslay divider(s) to have a hand hold cutout on outboard edge each side of divider(s).	$220
3136-0029	Air horn switch at pump panel. Switch to be labeled "Air Horn". Location: [#LOC].	$121
3136-0030	Diamond plate cover for Vogel Auto Lube System. Cover to have cut-outs for checking system fluid levels. Location: driver's side of dunnage pan.	$133

3136-0031	Removable Speedlay Tray(s). The floor of the tray(s) to be slotted to prevent the accumulation of water and allow for ventilation of wet hose.	$607
3136-0033	Crosslay divider(s) to be lowered approx 5" to provide room for bail handled nozzle(s) below cover.	$105
3136-0034	Microphone box 10W X 6H X 11D located on pump operator panel.	$489
3136-0042	Stainless steel roller assemblies for crosslays and/or speedlays. Rollers on side extrusions only and scuff plates on bottom extrusions.	$662
3136-0044	Pump panel compartments with push button latch. Locate (1) driver side pump panel and (1) officer side pump panel. Compartments to be located in lower forward corner of pump panels. Compartments to be approx. 14" wide x 14" high x 14" deep.	$1,610
3136-0045	Microphone Box Cast Products. Locate at/in the [#LOC].	$426
3136-0050	Extreme weather heat pan plates. Includes interior module area mounted plates for increasing the lower heat pan (forward and rearward) into the lower area of the module for increased heat retaining.	$373
3136-0051	Air horn switch at pump panel. Switch to be labeled "Code Red". Location: [#LOC].	$121
3136-0053	Microphone box. Locate at the [#LOC]. Microphone box to be 9"W x 11"H x 6.5"D.	$537
3136-0054	Deckgun to be located offset to the driver side of the dunnage storage pan. Deckgun piping to be recessed as low as possible for use with Akron Apollo Hi-Riser #3431	$578
3136-0055	The speedlay divider(s) to be held 12" short both ends for Nozzles.	$333
3136-0056	The crosslay divider(s) to be held 12" short both ends.	$351
3136-0059	Speedlay module tray(s) mounted to a directional Slide Master tray. Slide Master to have 100% extension to one side.	$1,223
3136-0061	Heat pan removable bottoms to have screws and nuts in place of butterfly latches.	$238
3136-0064	The lower area of the pump compartment to have a four (4) sided heat pan with two (2) removable (side to side) bottoms. Bottoms to be secured in the closed position with butterfly latches.	$876
3300-0007	Door single vertically hinged painted. Location(s): [#LOC]	$647
3300-0008	Door double vertically hinged painted. Location(s): [#LOC]	$719
3300-0009	Door single vertically hinged diamond plate. Location(s): [#LOC]	$452
3300-0010	Door double vertically hinged diamond plate. Location(s): [#LOC]	$647
3300-0011	Door single horizontally hinged lift-up painted. Location(s): [#LOC]	$628
3300-0012	Door single horizontally hinged lift-up diamond plate. Location(s): [#LOC]	$486
3300-0013	Door roll up short (up to 45") with satin finish POK. Location(s): [#LOC]	$652
3300-0014	Door roll up tall (greater than 45") with satin finish POK. Location(s): [#LOC]	$933
3300-0015	Door roll up short (up to 45") with painted finish POK. Location(s): [#LOC]	$1,044
3300-0016	Door roll up tall (greater than 45") with painted finish POK. Location(s): [#LOC]	$1,322
3300-0017	Door roll up short (up to 45") with satin finish ROM. Location(s): [#LOC]	$726
3300-0019	Door roll up tall (greater than 45") with satin finish ROM. Location(s): [#LOC]	$1,036
3300-0021	Door roll up short (up to 45") with painted finish ROM. Location(s): [#LOC]	$1,231
3300-0022	Door roll up tall (greater than 45") with painted finish ROM. Location(s): [#LOC]	$1,540
3300-0023	Door single stainless steel vertically hinged painted. Location(s): [#LOC]	$809
3300-0024	Door double stainless steel vertically hinged painted. Location(s): [#LOC]	$827
3300-0025	Door single horizontally hinged drop down painted. Location(s): [#LOC]	$519
3300-0026	Door single stainless steel horizontally hinged drop down painted. Location(s): [#LOC]	$647
3300-0027	Door bi-fold horizontally hinged diamond plate. Location(s): [#LOC] Includes upper door mounted guide roller assembly and the lower door will have chains for side or upper rear body mount or bumper style for lower rear body mounted.	$719
3300-0028	Door tri-fold vertically hinged diamond plate. Location(s): [#LOC]	$979
3300-0029	Door single stainless steel horizontally hinged lift-up painted. Location(s): [#LOC]	$829
3300-0030	Door double 3-point vertically hinged painted. Location(s): [#LOC]	$1,436
3300-0062	Keyed compartment door latch with #1250 key. Location(s): [#LOC]	$67
3300-0063	Keyed roll-up compartment door with #1250 key. Location(s): [#LOC]	$120
3300-0064	All apparatus doors, body and chassis, are to be keyed alike. Not avail on Commercial Chassis. Requires keyed latch option to be included in shop order.	$266
3300-0065	Electric lock for an ROM roll-up door (EA). The door to lock on both sides of compartment as applicable. Includes manual J236 key lock. Location(s): [#LOC]	$531
3300-0066	Drip pan for a ROM roll-up door (EA). Location(s): [#LOC]	$144
3300-0076	Door double 3-point vertically hinged painted. Location(s): [#LOC]	$1,046
3300-0079	Reverse hinge driver side single forward body compartment door.	$133
3300-0080	Stainless steel interior body door overlay. Each hinged body door interior surface to have a stainless steel overlay. Overlay to fit around any surface mounted items on the door.	$2,698
3300-0081	Keyed compartment door latch (Best Lock). Location(s): [#LOC]	$175
3300-0096	Keyed roll-up compartment door with #J236 key. Location(s): [#LOC]	$120
3300-0097	Keyed compartment door latch with #J236 key. Location(s): [#LOC]	$67
3300-0098	Roll-up door package Amdor. Includes (2) short satin roll-up doors and (4) tall satin roll-up doors. Door penent plates to be mounted offset forward of the compartment for better contact of external door slats to header plate brush	$7,036
3300-0099	Intergrated sill plate. Water Dam type door sill for ROM rollup door. Location(s):[#LOC]	$124
3300-0100	Cleveland door springs provided for vertically hinged body door(s). Locate [#LOC].	$132
3300-0102	Polished stainless steel interior body door overlay. Each hinged body door interior surface to have a polished stainless steel overlay. Overlay to fit around any surface mounted items on the door.	$4,048
3300-0103	Door double vertically hinged smooth plate sanded. Location(s): [#LOC]	$719
3300-0104	Keyed compartment Tri-Mark model 030-1300 door locking latch. Location: [#LOC].	$138
3300-0105	Door roll up tall (greater than 45") with satin finish Amdor. Location(s): [#LOC]	$1,352
3300-0106	Door roll up short (up to 45") with satin finish Amdor. Location(s): [#LOC]	$968
3300-0107	Pull down straps for lift-up door. Loc: [#LOC]	$88
3300-0117	Reverse hinge officer side single forward body compartment door.	$133
3300-0119	Door single vertically hinged smooth plate sanded. Location(s): [#LOC]	$647

3300-0120	Electric lock for a ROM roll-up door (EA). The door to lock on both sides of compartment as applicable. Includes manual 1250 key lock. Location(s): [#LOC]	$531
3300-0128	Electric locking D-Ring latch. Includes manual key override. Switch for door to be located below rear intermedite step. Switch to be located out of view while standing at rear of unit. Locate on B1.	$346
3300-0129	Door bi-fold horizontally hinged smooth plate sanded. Location(s): [#LOC].	$782
3300-0131	Door bi-fold horizontally hinged painted. Location(s): [#LOC]. Includes upper door mounted guide roller assembly and the lower door will have chains for side or upper rear body mount or bumper style for lower rear body mounted.	$892
3300-0132	Door to be notched for LDH hose. Notch on driver side to be approximately 5.75"W x 3.75"H and notch on officer side door to be approximately 10"W x 3.75"H. Location: B1 door.	$257
3300-0133	Door single horizontally hinged drop down sanded smooth plate. Location(s): [#LOC].	$411
3300-0134	Door single horizontally hinged lift-up painted. Includes double D-rings due to width of the door. Location(s): [#LOC]	$628
3300-0135	Door double 3-point vertically hinged smooth plate sanded. Location(s): [#LOC]	$1,436
3300-0138	Keyed compartment door latch with #CH751 key. Location(s): [#LOC]	$67
3300-0139	Door double 3-point horizontal hinged painted. Location(s): [#LOC]. Lower door should act as an exterior writing surface, w/ adjustable angles.	$1,436
3300-0140	Door single horizontally hinged drop down diamond plate. Location(s): [#LOC].	$390
3300-0141	Tri-Mark door latch. Location(s): [#LOC].	$68
3305-0000	Diamond plate generator cover.	$872
3305-0002	Bi-Fold diamond plate cover for the crosslay area. Includes applicable grab handle(s) and (2) hold downs. Non-aerial applications to be tagged as a non-stepping surface.	$764
3305-0003	Single diamond plate cover for the crosslay area. Includes applicable grab handle(s) and (2) hold downs. Non-aerial applications to be tagged as a non-stepping surface.	$517
3305-0006	All handrails (as applicable) are to have a rubber insert. Includes cab (N/A on commercial chassis), pump module and body.	$1,547
3305-0007	Vinyl [#COL] hosebed cover with attached rear flap(s).	$745
3305-0008	Vinyl [#COL] crosslay cover with attached side flaps.	$260
3305-0009	Compartment underbody with slide-out tray. Includes drop down front door with push button latch(es). [#LOC]	$1,662
3305-0010	Compartment underbody. Includes drop down front door with push button latches. Locate [#LOC].	$1,079
3305-0011	(2) piece aluminum hosebed cover. Includes center hosebed divider with notched rear, fill tower(s) access door(s), gas shocks, positive hold opens/hold closed at rear, (2) grab handles- frt and (2) handrails -rear.	$2,689
3305-0012	(4) piece aluminum hosebed cover. Includes center hosebed divider with notched rear, fill tower(s) access door(s), (2) gas shocks, positive hold-opens/hold-closed at center and at the rear, (6) grab handles- (4) fwd cover and (2) fwd area of rear cover with (2) handrails on rear cover.	$5,144
3305-0013	(2) piece aluminum hosebed cover. Includes dividerless cross structure, fill tower(s) access door(s), (2) gas shocks, positive hold-opens/hold-closed at the rear, (2) grab handles (fwd) and (2) handrails (rear).	$2,827
3305-0014	(4) piece aluminum hosebed cover. Includes divider-less cross structure, fill tower(s) access door(s), (2) gas shocks, positive hold-opens/hold-closed at center and at the rear, (6) grab handles- (4) fwd cover and (2) fwd area of rear cover with (2) handrails rear of each cover.	$5,407
3305-0015	Vinyl [#COL] speedlay front cover.	$204
3305-0016	Vinyl [#COL] speedlay side covers.	$174
3305-0017	Nylon black strap on running board suction tray (EA). Location: [#LOC]	$67
3305-0021	Vinyl [#COL] hosebed cover with side bungee cords and attached rear flap(s).	$1,037
3305-0022	Vinyl rear cover for diamond plate hosebed cover. Color: [#COL]	$230
3305-0023	Nylon black cargo net at rear of diamond plate or vinyl hosebed cover.	$485
3305-0024	Vinyl [#COL] side covers for diamond plate crosslay cover.	$162
3305-0025	Nylon black cargo net on sides for crosslay cover.	$192
3305-0026	Nylon black cargo net on front of speedlay.	$306
3305-0027	Nylon black cargo net on sides of speedlay.	$223
3305-0028	Vinyl [#COL] cover for running board suction tray. Location: [#LOC]	$162
3305-0029	Nylon black strap on running board suction tray (EA). For use with rolled hose. Location: [#LOC]	$77
3305-0032	Cover for side ladder tunnel. To include mounting bracket over upper ladders in pump module and black vinyl cover. Cover to be removable for access to pump area.	$348
3305-0033	Cover vinyl access for fill tower(s).	$171
3305-0034	Vinyl [#COL] hosebed cover without attached rear flap(s). Requires rear cover option.	$631
3305-0035	Diamond plate hosebed deflector. Located at front of hosebed area with angled front edge. To be hinged along forward edge with "T" style hold-downs. To cover all fill towers. The NFPA hosebed light (as applicable) to be located on trailing edge.	$439
3305-0036	TM control panel [#COL] vinyl cover. Includes lower twist locks and velcro front, side and top securing.	$343
3305-0037	Diamond plate generator cover with expanded metal on top and all (4) sides.	$872
3305-0038	Vinyl [#COL] crosslay cover top only.	$220
3305-0039	Diamond plate speedlay cover. Includes fixed rear portion on rear of module (over backboard storage area, if applicable) and hold-open with grab handles on forward area.	$561
3305-0040	Nylon black strap with clip release on running board suction tray (EA). Location: [#LOC]	$121
3305-0041	Vinyl [#COL] hosebed cover with side twist locks and bungee cord attached rear flap(s).	$1,037
3305-0042	Vinyl Red cover for officer side compartment top boxes. Includes snaps on hosebed side and velcro on the sides and outboard edge for securing. Includes notch for overhead ladder rack.	$343
3305-0043	Vinyl Red cover for driver side compartment top box. Includes snaps on hosebed side and velcro on the sides and outboard edge for securing.	$343
3305-0044	Hinged bustin grating cover each side of dunnage pan. Includes permanent mount bustin grating cover over center of dunnage pan. Diamond plate cover to be attached over officer side mounted bustin grating.	$907
3305-0045	Diamond Plate Storage Pan Cover. Includes (1) grab handle and (2) hold downs. Hinge to the front of the storage pan.	$723

3305-0048	Diamond Plate Cord Reel Cover. Includes grab handle and hold downs. Hinge to the front of the storage pan. Includes divider wall to isolate cord reel in pan.	$537
3305-0050	Hosebed cover fill tower support brackets. Includes two (2) "C" shaped plates mounted to the hosebed on either side of the fill tower. Plates are to be as high as the hosebed sides. Includes adding of twist locks to each corner of the hosebed cover tower flap (in addition to the velcro already provided).	$400
3305-0052	Vinyl [#COL] hosebed cover with side snaps and bungee cord attached rear flap(s).	$1,037
3305-0053	Diamond plate cover for the dunnage pan area. Includes permanently mounted panel under ladder rack and hinged panel over remaining pan. Includes (2) butterfly latches to hold closed. Hinge to the rear of dunnage pan.	$637
3305-0057	ROM roll-up hosebed cover with satin finish. Inlcudes a momentary switch located [#LOC] and to be easily accessible from the ground. Includes enclosing the operator housing. Includes (4) vinyl "No Step" tags - (2) each side on outboard sides on top of the cover.	$5,674
3305-0058	Nylon black cargo cover for running board suction tray. Location: [#LOC].	$306
3305-0060	Diamond plate cover for running board suction tray(s). Includes push-button latches and gator grip. Location(s): [#LOC].	$324
3305-0064	Nylon black strap with aluminium quick release buckle for hose tray. Strap to attach to side walls of tray down low as applicable. Location: [#LOC].	$99
3305-0065	Compartment underbody with slide-out tray. Includes drop down front door with D-ring latch(es). [#LOC]	$1,917
3305-0069	Diamond plate speedlay cover. Includes fixed rear portion on rear of module (over backboard storage area, if applicable) and hold-open with grab handles on rearward area.	$561
3305-0070	Diamond plate portable pump cover.	$1,062
3305-0071	(4) piece aluminum hosebed cover. Includes divider-less cross structure, fill tower(s) access door(s), (2) gas shocks, positive hold-opens/hold-closed at center and at the rear, (6) grab handles- (4) fwd cover and (2) fwd area of rear cover with (2) handrails rear of each cover. For use with Rear Mount Pumper.	$5,502
3305-0080	Diamond plate cover for running board suction tray(s). Includes push-button latches and gator grip. Includes cords to prevent covers from dropping to the ground when removed. Location(s): [#LOC].	$356
3305-0082	(4) piece aluminum hosebed cover. Includes center hosebed divider with notched rear, fill tower(s) access door(s), (2) gas shocks, positive hold-opens/hold-closed at center and at the rear, (6) grab handles- (4) fwd cover and (2) fwd area of rear cover with (2) handrails on rear cover. A landing platform (sized and positioned as required with overall rearend configuration) with embossed diamond plate surface will be centrally located at the upper rear of the apparatus to assit with hosebed cover operations.	$2,881
3305-0083	(4) piece aluminum hosebed cover. Includes divider-less cross structure, fill tower(s) access door(s), (2) gas shocks, positive hold-opens/hold-closed at center and at the rear, (6) grab handles- (4) fwd cover and (2) fwd area of rear cover with (2) handrails on rear cover. A landing platform (sized and positioned as required with overall rearend configuration) with embossed diamond plate surface will be centrally located at the upper rear of the apparatus to assit with hosebed cover operations.	$3,672
3305-0088	(4) piece aluminum hosebed cover. Includes center hosebed divider with notched rear, fill tower(s) access door(s), (2) gas shocks, positive hold-opens/hold-closed at center and at the rear, (6) grab handles- (4) fwd cover and (2) fwd area of rear cover with (2) handrails on rear cover. The enhanced extended landing area(s) will be used to assit with hosebed cover operations. For use with Enhanced Extended Rescue Pumper only.	$2,594
3305-0089	(4) piece aluminum hosebed cover. Includes divider-less cross structure, fill tower(s) access door(s), (2) gas shocks, positive hold-opens/hold-closed at center and at the rear, (6) grab handles- (4) fwd cover and (2) fwd area of rear cover with (2) handrails on rear cover. The enhanced extended landing area(s) will be used to assit with hosebed cover operations. For use with Enhanced Extended Rescue Pumper only.	$3,386
3310-0039	Cut-out on compartment floor for exhaust and cover plate for hydraulic lines.	$419
3310-0084	All tags on body to be mechanically attached with S/S screws and nuts.	$698
3310-0088	Body module for Snozzle boom.	$6,139
3310-0098	Step fold-down (EA). Location: [#LOC].	$805
3310-0112	Body module for Snozzle boom. Side panels / doors to be smooth painted plate.	$7,212
3310-0143	Auxiliary jack pad 24X24 (PR) with handle welded to top surface of pad. Includes mounting brackets.	$1,011
3310-0146	Auxiliary jack pad 24X24 (PR) with side mounted handle. Includes mounting brackets. Driver side mounted below L1, officer below RSBM. Mid mount boom only.	$1,011
3320-0005	SCBA Bottle Storage. (4) Cast Product SCBA bottle storage with gasketed doors. (2) each side in rear wheel well area.	$645
3320-0006	SCBA Bottle Storage. (3) Cast Product SCBA bottle storage with gasketed doors. (2) officer side and (1) driver side (fwd) in rear wheel well area.	$485
3320-0007	SCBA Bottle Storage. (7) E-ONE SCBA bottle storage with hinged doors (doors to match wheel well material) with push button latches. (4) officer side and (3) driver side in wheel well area.	$1,034
3320-0008	SCBA Bottle Storage. (8) E-ONE SCBA bottle storage with hinged doors (doors to match wheel well material) with push button latches. (4) officer side and (4) driver side in wheel well area.	$1,234
3320-0011	SCBA Bottle Storage. (11) E-ONE SCBA bottle storage with hinged doors (doors to match wheel well material) with push button latches. (6) officer side and (5) driver side in wheel well area- (3) FWD and (2) RWD.	$1,389
3320-0012	SCBA Bottle Storage. (7) E-ONE SCBA bottle storage with hinged stainless steel doors with push button latches. (4) officer side and (3) driver side in wheel well area.	$933
3320-0014	SCBA Bottle Storage. (6) E-ONE SCBA bottle storage with hinged doors (doors to match wheel well material) with push button latches. (3) officer side and (3) driver side in wheel well area for use with dual tank fills.	$1,009
3320-0015	SCBA Bottle Storage. (2) Cast Product SCBA bottle storage with gasketed doors. Located driver side rear wheel well area.	$645
3320-0016	SCBA Bottle Storage. (7) E-ONE SCBA bottle storage with hinged doors with push button latches. (4) officer side and (3) driver side in wheel well area. Rear driver side to have Cast Product SCBA bottle storage with gasketed door.	$1,034
3320-0017	SCBA Bottle Storage. (4) Cast Product SCBA bottle storage with gasketed doors. (2) each side in rear wheel well area. Recessed fuel fill to be protected behind the rear driver side SCBA door.	$1,156
3320-0018	SCBA Bottle Storage. (8) Fire Shopp SCBA bottle storage with hinged doors with push button latches. (4) officer side and (4) driver side in wheel well area.	$1,505

3320-0019	SCBA Bottle Storage. (7) Fire Shopp SCBA bottle storage with hinged doors with push button latches. (4) officer side and (3) driver side in wheel well area.	$1,261
3320-0020	SCBA Bottle Storage. (4) Fire Shopp SCBA bottle storage with hinged doors with push button latches. (2) officer side and (2) driver side in wheel well area.	$1,094
3320-0021	SCBA/Wheel Chock Storage. (2) Cast Product SCBA bottle storage with gasketed doors on driver side in wheel well area. (2) wheel chock storage compartments with hinged doors and push button latches located on officer side in wheel well area. (2) wheel chocks to be stored per compartment. Does not include wheel chocks. Storage doors to match wheel well material.	$2,556
3320-0022	SCBA Bottle Storage. (7) E-ONE SCBA bottle storage with hinged doors (doors to match wheel well material) with push button latches. (3) officer side and (4) driver side in wheel well area.	$1,034
3320-0024	SCBA Bottle Storage. (7) E-ONE SCBA bottle storage with hinged stainless steel doors with push button latches. (4) officer side and (3) driver side in wheel well area.	$1,365
3320-0030	SCBA Bottle Storage. (8) E-ONE SCBA bottle storage with hinged stainless steel doors with push button latches. (4) officer side and (4) driver side in wheel well area.	$933
3330-0001	Slideout platform-integral driver side running board.	$1,217
3330-0002	Slideout platform-rollerless. Includes chrome grab handle centered on the frt face of the platform. Located [#LOC].	$1,178
3330-0007	Folding Step. Location [#LOC]. Each location requires a minimum of (1) handrail per NFPA.	$111
3330-0008	Handrail 12". Location [#LOC].	$99
3330-0012	Intermediate pump panel step officer side with forward tapered corner. Includes step lighting (as applicable). Step light to be switched thru work light in cab.	$605
3330-0013	Platform with 500lbs. slides. Locate [#LOC]. Platform sized as required per location and includes handrail (as applicable for body mounted locations).	$793
3330-0020	Intermediate pump panel step driver and officer side with forward tapered corner. Includes step lighting (as applicable). Step lights to be switched thru work light in cab.	$1,164
3330-0023	Slideout platform-integral officer side running board. Not available with a front suction.	$1,217
3330-0025	Steps rear. Includes folding steps on officer side (staggered stepped as applicable with tailboard depth) for additional hosebed access and handrail mounted on officer side upper hosebed side (as applicable).	$327
3330-0026	(3) Cast Product steps. Mount to driver side of B1. To include lighting under each step and driver side upper hosebed handrail.	$301
3330-0031	Intermediate pump module step officer side with forward and rearward tapered corners. Locate just below the crosslay floor. Includes step lighting (as applicable). Step light to be switched thru work light in cab.	$396
3330-0033	Intermediate pump module step driver side. Locate just below the crosslay floor. Includes step lighting (as applicable). Step light to be switched thru work light in cab.	$280
3330-0034	Recessed folding step box. Driver side rear. To include all steps as applicable.	$223
3330-0035	Recessed folding step box. Officer side rear. To include all steps as applicable.	$223
3330-0036	(5) Folding Steps. Located on the officer and driver side behind rear doors of cab. Handrail to be mounted on upper portion of cab for access to the crosslays	$1,169
3330-0037	Intermediate pump panel step driver side directly below crosslays (full width). Includes (2) lower folding steps with (1) loop handrail towards rear. Includes step lighting (as applicable). Step light to be switched thru work light in cab.	$988
3330-0038	Upper hosebed handrail. Locate to rear most area of hosebed with same stanchions as rear tailboard handrails. Handrail not to be in the hosebed.	$209
3330-0041	Steps Rear NFPA. Includes diamond plate corner steps on driver and officer side for NFPA hosebed access and handrail mounted on driver and officer side upper hosebed side (as applicable)	$212
3330-0042	Hansen white LED body handrails upgrade package.	$1,181
3330-0045	Handrail to be mounted just below hosebed to be thru bolted. Includes (2) pass-through stanchions equally spaced. This 48" handrail is in place of standard 48" handrail.	$447
3330-0047	(2) Folding Steps. Located on the officer and driver side behind rear doors of cab. Rear cab handrails will be used for steps.	$631
3330-0048	Handrails above compartments over 96" (Pair). To be mounted on top of body.	$312
3330-0049	Handrails full length of hosebed cover door. Total of (4) handrails. Location (1) handrail on inboard side of each hosebed cover door.	$982
3330-0050	Intermediate pump panel step driver side with forward tapered corner. Includes step lighting (as applicable). Step light to be switched thru work light in cab.	$605
3330-0053	Folding Step. Location [#LOC]. Step include integral lights. Each location requires a minimum of (1) handrail per NFPA.	$132
3330-0055	Steps rear. Steps include integral lights. Includes folding steps on officer side (staggered stepped as applicable with tailboard depth) for additional hosebed access and handrail mounted on officer side upper hosebed side (as applicable).	$395
3330-0056	Intermediate pump panel step officer side with forward and rearward tapered corners. Includes step lighting (as applicable). Step lights to be switched thru work light in cab.	$756
3330-0057	Handrails to be mounted just below hosebed to be thru bolted. Handrails to have offset stanchions. These (2) appropriately sized handrails are in place of standard 48" handrail.	$447
3330-0058	Intermediate pump panel step driver side with forward and rearward tapered corners. Includes step lighting (as applicable). Step lights to be switched thru work light in cab.	$756
3330-0061	Handrail to be mounted on the rear of the hosebed. Handrail to use offset stanchions and be mounted downward. This is in place of standard below the hosebed handrail.	$159
3330-0062	Step rear intermediate. Intermediate rear step to be embossed diamond plate. Includes folding steps on driver side for NFPA hosebed access and handrail mounted on driver side upper hosebed side (as applicable).	$496
3330-0063	Steps rear. Includes diamond plate gator grip corner steps on officer side for hosebed access and handrail mounted on officer side upper hosebed side (as applicable).	$409
3330-0065	Zico access ladder. Location: [#LOC].	$1,514
3330-0069	Spacer bracket for platform mounting. Bracket to lower platform to approx. 12" from ground (measured to bottom of platform). Locate: [#LOC].	$231

3330-0070	Steps rear driver and officer (Montreal). Includes folding steps on driver and officer side with steps mounted as far rearward on the beavertail (not staggered) as applicable. Steps located (top of tailboard to top of step(down) flat surface) lowest (11"), middle (24.5") and top (39.5").	$376
3330-0071	Step rear intermediate above B2.	$635
3330-0072	Hansen red LED body handrails upgrade package.	$1,181
3330-0073	Step rear intermediate. Locate above B1, includes handrail (in place of horizontal hosebed handrail).	$496
3330-0074	Access ladder. Aluminum extruded ladder with ribbed aluminum extrusion steps located on officer side of pump module offset to the rear. Rear rail to loop up and over to aid in access into/out of dunnage storage pan.	$1,424
3330-0075	Slideout platform - SlideMaster. Location: [#LOC].	$1,555
3330-0076	Pool style handrail. Includes and approx. 16" loop over the body. Location: driver side staircase; forward handrail.	$224
3330-0077	Intermediate pump panel step officer without taper. Includes step lighting (as applicable). Step light to be switched thru work light in cab.	$638
3330-0079	Slideout platform-rollerless. Includes chrome grab handle centered on the front face of the platform (includes handrail as applicable for body mounted locations). Located [#LOC].	$793
3330-0080	Intermediate pump panel step driver side located rearward of the crosslays. Includes step lighting (as applicable). Step lights to be switched thru work light in cab.	$756
3330-0081	(5) Folding Steps. Located on the driver side behind rear doors of cab w/ diamond plate paint guard. Handrail to be mounted on upper portion of cab for access to dunnage area.	$690
3330-0082	Handrail 36". Location: driver side vertically mounted on forward corner extrusion of pump module..	$296
3330-0083	Handrail 18". Location: (1) on top of forward staircase module 3x3 extrusion, (1) on officer side lip of staircase storage pan and (1) on top of officer side compartment top offset to front.	$445
3330-0085	Aluminum access ladder at rear of body with extruded and ribbed extrusion sides and steps. The outboard vertical extrusion is to extend full height and over the rear upper body for an additional gripping surface when accessing the upper body/hosebed area. Locate to the [#LOC]	$516
3330-0089	Intermediate pump panel step driver and officer side without taper. Includes step lighting (as applicable). Step light to be switched thru work light in cab. Mounting feet to be reverse mounted due to vertically hinged panel.	$1,164
3330-0090	Handrail on pump module to be full length as possible. Location: [#LOC].	$99
3340-0003	Cast Products recessed fuel fill with door.	$113
3340-0004	Hosebed above the booster tank. Includes forward hosebed and tower(s) cover plate work. Hosebed adjustable divider extrusion rearward of the furthest tower is to run full width of the hosebed.	$1,450
3340-0005	Step rear intermediate. Includes folding steps on driver side for NFPA hosebed access and handrail mounted on driver side upper hosebed side (as applicable).	$496
3340-0015	Diamond plate single axle wheel well. Includes bolt-on composite wheel well liners and fenderettes.	$998
3340-0026	Diamond plate overlay front body. For Stainless Steel product only. To include the entire front body panels. Do not wrap to the door opening.	$366
3340-0027	Diamond plate corner guards for the driver and officer front compartment face. Guards to wrap around the corner and be full height of side assembly.	$184
3340-0028	Stainless Steel corner guards for the driver and officer front compartment face. Guards to wrap around the corner and be full height of side assembly.	$210
3340-0034	The hinged door(s) of [#LOC] to have door louvers for additional ventalation.	$143
3340-0035	Divider Long. To run full length of hosebed (front to rear).	$439
3340-0036	Body compartment interiors to have a swirled finish. Includes pan of hinged door as applicable.	$1,878
3340-0041	Removable number plate with mounting brackets. Locate [#LOC]. Plate to be painted job color. Lettering and/or graphics not included.	$241
3340-0045	(2) driver side roof top compartments. Includes hinged raised compartment lids with turn latches. Each lid to have (1) bracket mounted light and to be wired to door ajar indicator in cab.	$2,258
3340-0049	Hosebed Storage Pan. Locate in forward area of hosebed.	$661
3340-0051	Reinforce flooring of compartment [#LOC] for storage of heavy equipment.	$287
3340-0052	Stainless steel trim on bottom edge of compartment opening of [#LOC]	$108
3340-0055	Cast Products recessed fuel fills with doors for dual fuel fill application.	$393
3340-0059	Recessed Fuel fills for dual fuel fill application. (1) each side in wheel well.	$222
3340-0060	Diamond plate corner guards for the driver and officer rear compartment face. Guards to wrap around the corner and be full height of side assembly.	$210
3340-0061	The walls of compartment [#LOC] to have additional louvers for additional ventalation.	$72
3340-0062	Divider medium. To run full length of hosebed (front to rear) behind single fill tower.	$394
3340-0063	Divider short. To run full length of hosebed (front to rear) behind dual fill towers.	$331
3340-0067	Turtle Tile Brand [#COL] Floor Matting covering all applicable Compartment Floors, Shelves, and Rollout Trays.	$953
3340-0068	Mud flaps, rear, black with Saulsbury logo.	$144
3340-0074	Body mainframe and hosebed side assemblies for a 85" high body.	$1,046
3340-0075	Body mainframe and hosebed side assemblies for a 90" high body.	$2,090
3340-0076	(2) officer side roof top compartments. Includes hinged raised compartment lids with turn latches. Each lid to have (1) bracket mounted light and to be wired to door ajar indicator in cab.	$2,258
3340-0077	Body compartment Interiors to have Zolatone gray finish. To include pan of hinged doors (as applicable).	$4,703
3340-0078	Body compartment Interiors and compartment mounted components (shelves, trays, toolboards,etc.) to have Zolatone gray finish. To include pan of hinged doors (as applicable).	$9,976
3340-0080	Bolt-on diamond plate 18" tailboard (full width of body). Includes (2) squared off beavertails (no stanchions) with removable outer panels and (3) handrails- (2) vertically on beavertails and (1) horizontally below hosebed.	$834
3340-0081	Bolt-on diamond plate tailboard (full width of body). Includes (3) handrails- (2) vertically on trailing edge of body and (1) horizontally below hosebed.	$1,113
3340-0082	Bolt-on diamond plate tailboard (full width of hosebed). Includes (3) handrails- (2) vertically on trailing edge of body and (1) horizontally below hosebed.	$627

3340-0083	Bolt-on diamond plate tailboard (full width of rear compartment). Includes the enhanced extended side compartment frame work with diamond plate compartment tops, (1) officer side lower area folding step. Driver side includes (1) upper hosebed mounted handrail (as applicable) and (3) handrails- (2) vertically on trailing edge of body and (1) horizontally below hosebed.	$744
3340-0088	Smooth plate single axle wheel well painted job color. Includes bolt-on composite wheel well liners.	$1,447
3340-0089	Turtle Tile Brand [#COL] Floor Matting covering all applicable Compartment Floors, Shelves, and Rollout Trays.	$1,538
3340-0090	Turtle Tile Brand [#COL] Floor Matting covering all applicable Compartment Floors, Shelves, and Rollout Trays.	$2,095
3340-0093	Mud flaps, rear, black with E-ONE logo.	$143
3340-0094	Body mainframe and hosebed side assemblies for a 95" high body.	$3,136
3340-0095	(2) officer side roof top compartments with extra width to inboard side. Includes hinged raised compartment lids with turn latches and gas shock hold open and drain line(s) ran to below body. Each lid to have (1) bracket mounted LED light and to be wired to door ajar indicator in cab.	$4,514
3340-0096	(2) driver side roof top compartments with extra width to inboard side. Includes hinged raised compartment lids with turn latches and gas shock hold open and drain line(s) ran to below body. Each lid to have (1) bracket mounted LED light and to be wired to door ajar indicator in cab.	$4,514
3340-0097	Brushed Stainless Steel single axle wheel wells. Includes bolt-on composite wheel well liners and fenderettes.	$1,097
3340-0098	Stainless Steel single axle wheel wells. Includes job color paint, bolt-on composite wheel well liners and fenderettes.	$1,366
3340-0099	Diamond plate overlay rear body. For Stainless Steel product only. To include the entire rear body panels. Do not wrap to the door opening.	$300
3340-0102	Angled (Boston style) style tailboard corners.	$396
3340-0109	Power Vent System located in [#LOC].	$172
3340-0113	Adjustable ladder brackets. Mount in adjustable tracks on officer side.	$421
3340-0114	Hosebed above the booster tank and side body compartments. Includes forward hosebed and tower(s) cover plate work and extended width side to side (over side compartments) for increased hosebed capacity.	$2,777
3340-0115	Bolt-on diamond plate 16" tailboard (full width of body). Includes (2) squared off beavertails (no stanchions) with removable outer panels and (3) handrails- (2) vertically on beavertails and (1) horizontally below hosebed.	$780
3340-0116	Bolt-on diamond plate 14" tailboard (full width of body). Includes (2) squared off beavertails (no stanchions) with removable outer panels and (3) handrails- (2) vertically on beavertails and (1) horizontally below hosebed.	$726
3340-0117	Bolt-on diamond plate 12" tailboard (full width of body). Includes (2) squared off beavertails (no stanchions) with removable outer panels and (3) handrails- (2) vertically on beavertails and (1) horizontally below hosebed.	$672
3340-0118	Bolt-on diamond plate 10" tailboard (full width of body). Includes (2) squared off beavertails (no stanchions) with removable outer panels and (3) handrails- (2) vertically on beavertails and (1) horizontally below hosebed.	$618
3340-0119	Speedy Dry Hopper. Locate [#LOC]. Includes discharge chute in compartment directly below roof top compartment with close off valve and extension hose for ground level dispensing. Capacity of speedy hopper is 200 lbs.	$1,403
3340-0121	Full length driver side tunnel. Reduces driver side upper compartment depths to 12" deep IPO 26". Tunnel includes access door at rear.	$1,264
3340-0122	Half length driver side tunnel. Reduces driver side upper compartment depths of L2 and L3 to 12" deep IPO 26".	$789
3340-0124	Upgrade runningboards to 3/16" diamond plate.	$82
3340-0125	Recess mounting for directional lightbar. Located on rear area of body.	$354
3340-0126	Diamond plate single axle wheel well. Includes fenderettes and bolt-on stainless steel wheel well liners.	$2,553
3340-0128	Bolt-in partition walls. Locate in lower rear compartment transverse area. Partitions to seperate the side rear compartments from the rear compartment.	$208
3340-0133	Officer side beavertail to have recess box (9"w x 14"H x depth of beavertail). Box to be mounted low flush with top of tailboard.	$366
3340-0135	Body mainframe and hosebed side assemblies for a 73" high body.	$1,464
3340-0136	Bolt-on diamond plate 20" tailboard (full width of body). Includes (2) squared off beavertails (no stanchions) with removable outer panels and (3) 48" handrails- (2) vertically on beavertails and (1) horizontally below hosebed.	$889
3340-0137	Body mainframe and hosebed side assemblies for a 92" high body.	$2,508
3340-0139	Bolt-on diamond plate 18" tailboard (full width of body). Includes (2) slanted beavertails (no stanchions) with removable outer panels and (3) handrails- (2) vertically on beavertails and (1) horizontally below hosebed.	$1,043
3340-0140	Hosebed above the booster tank. Includes forward hosebed and tower(s) cover plate work. Adjustable track rearward of the fill tower(s) to run full width of the hosebed area.	$1,622
3340-0141	Label package for Memphis units only, to include labeling of removable panels to indicate what is behind.	$86
3340-0142	Crosslay roller 18". Mount driver side front compartment face just below compartment top.	$133
3340-0143	Interior ladder tunnel door. Locate in B1 inline with ladder tunnel thru tank. Hinge to officer side with D-Ring latch and driver side to be notched for cord reel.	$378
3340-0144	Stainless Steel floor overlay. B1/R1 full width.	$245
3340-0145	Rubrail for the body and pump area module(s).	$670
3340-0146	Stainless steel rubrail for the body and pump area module(s).	$1,338
3340-0147	Louver Guards. All lower body compartment louvers to have protective guard provided on exterior of compartments. Guards to prevent road spray from entering compartments.	$476
3340-0148	Body and Cab logos (exterior large and small logos) to be mounted at final inspection.	$670
3340-0149	Transverse Module (full width). Locate forward of pump area. Includes a single compartment opening per side (with a shallow lower area and a transverse upper area with diamond plate flooring) and upper area for single stacked double crosslay with backboard storage.	$3,539
3340-0150	Dri-Dek brand [#COL] floor matting covering all applicable compartment floors, shelves, and rollout trays.	$889
3340-0151	Dri-Dek Brand [#COL] floor matting covering all applicable body compartment floors, shelves, and rollout trays.	$1,473
3340-0152	Dri-Dek brand [#COL] floor matting covering all applicable compartment floors, shelves, and rollout trays.	$2,032
3340-0153	Hosebed storage pan diamond plate lids (2) lids. Officer side lid to run just under the ladder rack in the stored position. The driver side to be as large as possible with remaining space. Each hinged to rear of pan. Includes (1) gas shock hold open and push-button latches. Included in the pan are vertical "L" shaped partion walls located next to inboard side of fill towers. Seal partitions to keep water from entering from the outboard psoition.	$622

3340-0154	Mud flaps, rear, black with no logo.	$143
3340-0158	Underbody Splash guard behind rear axle mounted to body	$470
3340-0165	Bracket pac trac jumbolok p/n 1070 PT. To hold (2) pike poles (1) 6ft and (1) 10ft. To be located on officer side compartment top.	$240
3340-0166	Bolt-in partition wall. Locate in [#LOC]	$193
3340-0173	Backboard storage box. Located in the officer side of the hosebed (full length). Includes vertically hinged door (wired to door ajar) w/push-button latch and composite flooring. Box to hold: (2) backboards. The box to have an open area (top access) to the rear of the backboards in remaining hosebed area.	$448
3340-0176	Swirl plate single axle wheel well with clear coat finish. Includes bolt-on composite wheel well liners.	$1,533
3340-0180	Brushed stainless steel overlay front body. For Stainless Steel product only. To include the entire front body panels. Do not wrap to the door opening.	$546
3340-0181	Each lid to have (1) additional bracket mounted light. This is in addition to light that comes standard for total of (2) lights per compartment.	$135
3340-0182	Brushed stainless steel single axle wheel well. Includes bolt-on stainless steel wheel well liners and fenderettes.	$2,192
3340-0184	Diamond plate box for directional lightbar and (2) GH scene lights. Box to be mounted on 3" x 3" aluminum angle at rear of hosebed storage pan. Lights to be surface mounted to box.	$502
3340-0187	Sign "Stay Back 150 Metres"with black reflective lettering. Locate below rear of body.	$117
3340-0189	Seattle Body. Includes all body doors (hinged doors to have magnetic door ajar includes TM walkway tool cmpts, side body roll-up doors (as applicable) to be painted job color), B1 to be notched on (8" wide x 3" high) D-Ring door (door to have no gas shock, to be plunger style), hosebed, rear int. step 10" wide IPOS with (2) lower folding steps (no upper steps), Zico drop down rack (hat brackets to be reduced in depth to pull ladders closer inboard), ladder rack to include audible alarm same as last units, vertical partition in B1 compt was deleted from units. L3/R3 extended areas to have flush floors. Unit to have old style shelf tracking. Tracks to be ran to compartment floor to just below roll-up door from compartment ceiling. All compartment floors to be 3/16" smooth plate IPOS diamond plate.	$32,222
3340-0190	Diamond Plate Hosebed Storage Pan Cover. Includes (1) D-ring latch and gas shock(s). Hinge to the rear of the hosebed storage pan.	$923
3340-0192	Storage box ceiling mounted in transverse of L3/R3.	$396
3340-0193	Pumper Body and Cab Tags in French to replace standard English E-One supplied Tags.	$1,355
3340-0194	Bolt-on diamond plate tailboard (full width of rear compartment) for use with low hosebed. Includes driver side (1) upper hosebed mounted handrail (as applicable), (1) handrail mounted horizontally below hosebed and (2) handrails mounted vertically on trailing edge of body.	$744
3340-0197	The following compartments to be full height and full depth L1, L2, R1.	$791
3340-0198	Rear diamond plate vertically hinged door on driver side roof top compartments. Includes thumb latch and wiring for door ajar switch.	$160
3340-0199	Hosebed storage box for 17' Little Giant Ladder to be vertically stored. Includes vertically hinged door (wired to door ajar) with push-button latch. Located in driver side of hosebed.	$786
3340-0200	Removable slat flooring. Location: [#LOC]	$238
3340-0207	Piping cover to be located in compartment [#LOC]. Includes compartment wall cut-outs for piping.	$403
3340-0210	Brushed stainless steel overlay rear body. For Stainless Steel product only. To include the entire rear body panels. Do not wrap to the door opening.	$546
3340-0211	Painted smooth plate overlay rear body. For Stainless Steel product only. To include the entire rear body panels. Do not wrap to the door opening.	$1,689
3340-0212	Diamond plate access door in dunnage pan for access to plumbing in pump module. Includes push button latches.	$293
3340-0213	"L" shaped partition located in hosebed to protect the fill towers.	$309
3340-0214	Smooth plate outboard beavertail panels (PR). Painted job color.	$470
3340-0215	Divider Long. To run full length of hosebed (front to rear). Divider height to half of hosbed depth (top to bottom). For use with low hosebed configurations only.	$439
3340-0216	Body mainframe and upper body/hosebed side assemblies for a 90" high body.	$577
3340-0217	The upper outboard panels of the speedlay module, the wheel well and the rear end upper/lower rearward facing panels to smooth plate overlays. These area are to be seamless and painted job color.	$3,778
3340-0218	Sign "Stay Back 500FT". White plate with red reflective lettering. Locate low on rear of body / body doors.	$117
3340-0220	Body compartment Interiors to have Zolatone black finish. To include pan of hinged doors (as applicable).	$4,703
3340-0221	Body compartment Interiors and compartment mounted components (shelves, trays, toolboards,etc.) to have Zolatone black finish. To include pan of hinged doors (as applicable).	$9,976
3340-0223	Stainless Steel corner guards for the driver and officer rear compartment face. Guards to wrap around the corner and be the height of the top of the tail lights.	$223
3340-0226	Special hosebed configuration. (1) long divider driver side on top of discharge box 4.25" from hosebed side. (1) short divider officer side on top of discharge box 5.625" from hosebed side. (1) short divider officer side up against discharge box 8.875" from hosebed side. (1) short divider officer side 14.625" from hosebed side. (2) short dividers officer side 14" high, (1) divider 21.375" in from hosebed side and (1) divider 28.125" in from hosebed side. Includes bolt-in vertical partition from right side hosebed wall to center divider, 84" from rear of hosebed. Remaining area forward of partition to be used for storage area. Includes hinged shelf in hosebed over the (2) 14" high dividers hinged on right side 20" wide x 84" long. Includes hosebed dividers and discharge cover boxes.	$3,067
3340-0231	Nylon black cargo net(s) in interior compartment opening(s) behind lift-up doors of [#LOC]. Cargo net(s) to be held in place at top between two (2) pieces of flat bar, through-bolted. Cargo net(s) to be held in place at bottom with twist-locks outboard and snaps inboard. Two (2) velcro straps to be installed (1) on rear of flat bar and (1) cargo net to hold cargo net in place for comparment access.	$596
3340-0232	Directional Lightbar Box. Located on rear area of body between upper rear hosebed side tubes. Box to be diamond plate.	$512

3340-0233	Speedy Dry Hopper. Locate roof top compartment above R3. Includes discharge chute in compartment directly below roof top compartment with close off valve and extension hose for ground level dispensing. Capacity of speedy hopper is 68 lbs.	$1,095
3340-0234	Divider Long. To run full length of hosebed (front to rear). Rear of divider to have cut at 45 degree angle and hand hold cutout at 45 degree angle.	$439
3340-0235	Rubrail for the body and pump area module(s). Rubrail for rear of tailboard not included.	$670
3340-0237	Speedy Dry Hopper. Locate dunnage pan on officer side. Locate control on officer side pump panel, plumbing to terminate approx. 20" above runningboard. Includes 2.5" Akron ball valve to control plow and provide cap. Includes snubber valve control of air to assist feed of speedy dry and a trash screen to in top of hopper. Capacity of speedy hopper is 200 lbs.	$2,572
3340-0241	Rear diamond plate vertically hinged door on officer side roof top compartments. Includes thumb latch and wiring for door ajar switch.	$160
3340-0242	Diamond plate storage box with hinged lid w/push button latches. Located in hosebed storage pan to be approx. 36"W x 60"L x 18"H.	$1,465
3340-0243	Hose storage tray located on officer side compartment top. Tray to be full length of compartment top and have drainage slots on bottom of tray. Includes cargo net cover.	$1,562
3340-0245	Nylon black cargo net(s) over exterior compartment opening(s) [#LOC]. Cargo net to be held in place with twist-locks.	$485
3340-0248	Hosebed Storage Pan. Locate in forward area of hosebed. Extra width front to back for equipment, generator and fill tower storage.	$1,321
3340-0251	Half length driver side tunnel. Reduces driver side upper compartment depths of L2 and L3 to 12" deep IPO 26". Includes cut-out in hosebed side wall in forward area of L2. Cut-out to forward of Little Gaint sleeve. Includes cover plate with push button latches.	$1,811
3340-0252	Bolt-in floor R2. Floor is in addition to the existing DP floor. Floor to have 2" raised forward area (tapered towards rear for securing cribbing) and run full length front to rear.	$196
3340-0253	Backboard storage compartment. Locate in officer side ladder tunnel. Rack to be approx 2" wide.	$368
3340-0258	A deflector shield will be placed in front of the light tower or A/C system. Deflector will be in front of the forward most componet.	$831
3340-0264	License plate sized number plate. Locate in license plate bracket(s). Plate to be painted job color. Lettering and/or graphics not included.	$187
3340-0271	Nylon black cargo net in interior compartment opening behind door(s) of [#LOC]. Cargo net to be mechanically attached to bottom of compartment opening and bungee cords in the top corners.	$485
3340-0272	Sign "Stay Back 500FT" with black reflective lettering. Locate B1 door above D-ring.	$117
3340-0280	Divider Long. To run full length of hosebed (front to rear). Locate on top of hard suction storage in hosebed.	$439
3340-0284	The hosebed divider(s) to be notched on the rearward end for nozzle(s).	$231
3340-0285	Bolt-in partition wall. Locate in centered (front to back) in driver side roof top compartment.	$288
3340-0290	Full width partition(s) located in hosebed rearward of the fill tower(s).	$473
3340-0291	Removable number plate with mounting brackets. Locate [#LOC]. Plate to be painted job color. Plate to be 8"W x 20"H. Lettering and/or graphics not included.	$342
3340-0292	Smooth plate single axle wheel well painted job color. Includes bolt-on composite wheel well liners. Wheel well plate(s) to be flush mounted.	$3,347
3340-0293	Crosswalk and Speedlay module compartment Interiors to have Zolatone gray finish.	$631
3340-0294	Recessed fuel fill officer side wheel well.	$261
3340-0295	(1) driver side rear pump module extra width (inboard side) roof top compartment (offset rearward and sized to allow deck gun to stow without interfering with hosebed area). Includes hinged raised compartment lid with turn latches. Compartment to have (1) bracket mounted LED light and wired to door ajar indicator in cab. Outboard side of body to run full width and wrap around the rear and meet with the end of the hosebed.	$1,973
3340-0296	(1) driver side transverse module extra width (inboard side) roof top compartment (offset rearward). Includes hinged raised compartment lid with turn latches. Compartment to have (1) bracket mounted LED light and wired to door ajar indicator in cab. Forward area to be open for general location of items in forward transverse pan.	$1,973
3340-0299	Transverse module (full width and height of body) with lower storage areas (compartment opening 67" wide and same height as main body compartments). Includes full width forward storage pan and a pan in the rearward center/officer area between the driver roof top compartment. Transverse floor to run full width. Rear headboard to have area for routing of plumbing for preconnects located in rearward area.	$6,349
3340-0300	(1) officer side rear pump module roof top compartment. Includes hinged raised compartment lid with turn latches. Compartment to have (1) bracket mounted LED light and wired to door ajar indicator in cab. Outboard side of body to run full width and wrap around the rear and meet with the end of the hosebed end.	$1,129
3340-0305	Body mainframe and hosebed side assemblies for a 90" high body. Includes modifications for T-Case and tank sump with 4x4 application.	$2,613
3340-0309	Sign "Keep Back 300FT". White plate with red reflective lettering. Locate on rear ladder access door.	$117
3340-0310	Tags Mechanically Fastened. Includes all metal tags/labels on the body and cab.	$363
3340-0313	Locate Foam Fill Tower in the hosebed storage pan. Water Fill Tower located in the hosebed.	$380
3340-0319	Bolt-on diamond plate 10" tailboard (full width of body). For use with rear ladder application.	$803
3340-0320	Locate Tank Fill Tower(s) in the hosebed area. For use with hosebed storage pan for max storage pan capacity.	$671
3340-0324	Body mainframe and hosebed side assemblies for a 98" high body.	$3,764
3340-0327	Heat Pan for rear mount pump application. Includes notching for tow eyes and rear hitch receiver. Pan to not interfer with the connections of any towing hooks.	$1,886
3340-0335	Cast Products pass thru with door. There will be a pass thru from the outside of the truck to the inside for wires. Locate [#LOC].	$113
3340-0348	Divider Short. To be split for rear mount hosebed application. Main body hosebed divider to be squared on both ends. Rear hosebed divider to have radius end.	$569
3340-0353	Body compartment Interiors and compartment mounted components (shelves, trays, toolboards,etc.) to have Zolatone gray finish. To include pan of hinged doors (as applicable).	$4,703
3340-0355	(1) officer side rear transverse module roof top compartment. Includes hinged raised compartment lid with turn latches. Compartment to have (1) bracket mounted LED light and wired to door ajar indicator in cab.	$1,129

3340-0356	(1) driver side rear transverse module roof top compartment. Includes hinged raised compartment lid with turn latches. Compartment to have (1) bracket mounted LED light and wired to door ajar indicator in cab.	$1,129
3340-0358	Backboard storage sleeve for (1) board. 4"H x 20"W x 76"L. Includes (2) retaining straps, (1) each side for boards. Location: Horizontally mounted through L3/B1/R3.	$606
3350-0000	Hydraulic hose reel for use with Hurst brand tools. Includes 100' 1/4" hose (up to 5,000 PSI) and nylon roller unit (captive type) reel mounted. Location: [#LOC]. Hose Color [#COL].	$2,170
3350-0001	Air Reel w/electric rewind. 12V with 100' .25" hose plumbed to the truck air system. Location: [#LOC]	$2,385
3350-0004	Low Pressure Utility Air Hose Reel assembly with 250' low pressure air hose and mini panel. Locate in [#LOC].	$2,289
3350-0009	Hydraulic hose reel for use with TNT brand tools. Includes 100' 1/4" hose (up to 10,000 PSI) and nylon roller unit (captive type) reel mounted. Location: [#LOC]. Hose Color [#COL].	$4,361
3350-0010	Hydraulic hose reel for use with Phoenix brand tools. Includes 100' 1/4" hose (up to 5,000 PSI) and nylon roller unit (captive type) reel mounted. Location: [#LOC]. Hose Color [#COL].	$2,170
3350-0011	Hydraulic hose reel for use with Code 3 brand tools. Includes 100' 1/4" hose (up to 5,000 PSI) and nylon roller unit (captive type) reel mounted. Location: [#LOC]. Hose Color [#COL].	$2,170
3350-0012	Hydraulic hose reel for use with Amkus brand tools. Includes 100' 1/4" hose (up to 10,500 PSI) and nylon roller unit (captive type) reel mounted. Location: [#LOC]. Hose Color: [#COL].	$4,361
3350-0013	Hydraulic hose reel for use with Hurst Centaur brand tools. Includes 100' 1/4" hose (up to 10,000 PSI) and nylon roller unit (captive type) reel mounted. Location: [#LOC]. Hose Color [#COL].	$4,361
3350-0014	Hydraulic hose reel for use with Genesis brand tools. Includes 100' 1/4" hose (up to 10,000 PSI) and nylon roller unit (captive type) reel mounted. Location: [#LOC]. Hose Color [#COL].	$4,361
3350-0015	Hydraulic hose reel for use with Holmatro brand tools. Includes 100' 1/4" hose (up to 10,000 PSI) and nylon roller unit (captive type) reel mounted. Location: [#LOC]. Hose Color [#COL].	$4,361
3350-0016	12' Lead/Supply Line for high pressure hydraulic reel. To be used with 10,000 PSI hyd reels. Locate on reel in [#LOC].	$741
3350-0018	12' Lead/Supply Line for low pressure hydraulic reel. To be used with 5,000 PSI hyd reels. Locate [#LOC].	$594
3350-0024	Dual hydraulic reel rollers mounted thru bolt-on bracket. Includes mounting rewind switches towards center of bracket. Location(s): [#LOC]	$435
3350-0025	Hydraulic hose reel for use with TNT brand tools. Includes 100' 1/4" rubber hose (up to 10,000 PSI) and nylon roller unit (captive type) reel mounted. Location: [#LOC]. Hose Color [#COL].	$4,361
3350-0026	Hydraulic hose reel for use with Amkus brand tools. Includes 100' 1/4" rubber hose (up to 10,500 PSI) and nylon roller unit (captive type) reel mounted. Location: [#LOC]. Hose Color: [#COL].	$4,361
3350-0029	Route hydraulic lead line(s) to [#LOC].	$86
3350-0030	Low pressure utility air hose reel w/spring rewind. Includes 50' 3/8" low pressure air hose, rollers, ball stop and and shut-off valve accessible from ground. Loc: [#LOC]	$1,200
3350-0032	Akron utility air hose reel. Includes 200' 3/8" hose and reel mounted nylon roller unit (captive type). Loc: [#LOC].	$1,275
3350-0033	Akron hydraulic hose reel for use with Hurst brand tools. Includes 100' 1/4" hose (up to 5,000 PSI) and reel mounted nylon roller unit (captive type). Location: [#LOC]. Hose Color: [#COL].	$2,017
3350-0036	Hydraulic hose reel for use with Hurst Centaur brand tools. Includes 150' 1/4" hose (up to 10,000 PSI) and nylon roller unit (captive type) reel mounted. Location [#LOC]. Hose Color [#COL].	$5,311
3350-0040	12' Lead/Supply Line for high pressure hydraulic reel. To be used with 10,500 PSI hyd reels. Locate on reel in [#LOC].	$778
3350-0041	30' Lead/Supply Line for high pressure hydraulic reel. To be used with 10,500 PSI hyd reels. Locate [#LOC].	$1,157
3350-0042	Triple Hose Lead/Supply Line for TNT Reels. (1) 30' Lead/Supply Line for high pressure hydraulic reel. Locate officer side front bumper. Hose Color Blue. (2) 12' Lead/Supply Line for high pressure hydraulic reel. driver forward roof compartment (above L1 forward). Hose Color (1) Red and (1) Yellow. To be used with 10,000 PSI hyd reels.	$3,636
3350-0043	Akron hydraulic hose reel for use with Amkus brand tools. Includes 100' 1/4" hose (up to 10,500 PSI) and reel mounted nylon roller unit (captive type). Location: [#LOC]. Hose Color: [#COL].	$3,113
3350-0045	Akron reel to be powder painted custom color. Requires approval from vendor on color. Location: [#LOC]. Reel Color: [#COL].	$108
3350-0046	8' Lead/Supply Line for high pressure hydraulic reel. To be used with hyrdraulic reels between 10,000 to 10,500 PSI. Locate: [#LOC].	$360
3350-0047	6' Lead/Supply Line for high pressure hydraulic reel. To be used with 10,500 PSI hyd reels. Locate on reel in [#LOC].	$731
3350-0048	Low Pressure Utility Air Hose Reel assembly with 250' low pressure air hose. Locate in [#LOC].	$1,719
3365-0002	Recessed folding ladder storage compartment located [#LOC]. Compartment sized to store a 10' ladder with feet.	$496
3365-0003	Overhead ladder rack door to be painted job color.	$202
3365-0004	(2) pike pole storage tubes. Locate inboard side of rack with pike pole hooks stored in the up position.	$390
3365-0005	Drop Down Fold-A-Tank Rack. Rack to hold [#LOC] gallon portable tank.	$1,378
3365-0010	(3) pike pole storage tubes. Locate inboard side of rack with pike pole hooks stored in the up position.	$584
3365-0011	Floor mounted roll-out tray. Includes 250lbs. tray capacity. Mount on [#LOC] floor.	$585
3365-0012	Recessed folding ladder and pike pole storage compartment located [#LOC]. Compartment sized to store a 10' ladder with feet and (2) pike poles.	$779
3365-0020	Zico Electric Drop Down Ladder Rack. Includes diamond plate spacer brackets with ladder rack controller located on the officer side pump panel.	$4,414
3365-0021	Manually Operated Aluminum Drop Down Ladder Rack. Includes (2) assist lift/lower handles and securing pins (accessable from ground) on each end.Ladder hold downs to secure (1) 2-section extension and (1) roof.	$2,079
3365-0023	Ladder storage thru tank for (1) 2-section 24' extension, (1) 14' roof, (1) 10' attic with feet and (2) pike poles. Reduces selected water tank capacity by approximately 250 gallons.	$2,510
3365-0024	Ladder storage thru tank for (1) 3-section 35' extension, (1) 14' roof, (1) 10' attic with feet and (2) pike poles. Reduces selected water tank capacity by approximately 250 gallons.	$2,732
3365-0025	Attic ladder mounting brackets (PR). Locate [#LOC].	$276
3365-0026	Zico pike pole mounting brackets (PR). Locate on top of Zico Drop Down Ladder Rack.	$145

3365-0027	Zico attic ladder mounting brackets (PR). Locate on top of Zico Drop Down Ladder Rack.	$313
3365-0028	Hard Suction Storage Rack. Driver side compartment top. Includes spring hold downs and scuff plates behind spring mounts (as applicable).	$332
3365-0029	Hard Suction Storage Box (pr). Stored (1) each side below "T" of tank. Includes hinged door with push-button latch.	$489
3365-0030	Double Hard Suction Storage Rack. Driver side compartment top. Includes spring hold downs with scuff plates (as applicable).	$659
3365-0031	Hard Suction Storage Rack. Officer side in adjustable track above ladders. Includes spring hold downs and scuff plates.	$346
3365-0032	Hard Suction Storage Box. Stored below driver side "T" of tank. Includes hinged door with push-button latch.	$245
3365-0033	Recessed pike pole storage compartment located [#LOC]. Compartment sized to store (2) pike poles.	$400
3365-0034	(2) pike pole storage tubes. Locate [#LOC].	$285
3365-0035	Hard Suction Storage Rack. Officer side compartment top. Includes spring hold downs and scuff plates behind spring mounts (as applicable).	$332
3365-0040	SCBA/Fire Extinguisher storage rack. Locate in [#LOC]. To hold (6) bottles- (2) wide/(3)high. Bottles to be stored angled upward in the compartment. The bottom and sides are to include ribbed rubber inserts.	$450
3365-0041	Hardsuction Storage Box. Located in the officer side hosebed. Includes drop down door (wired to door ajar) w/push-button latches, hosebed style top and nylatron flooring (no divider). Box to hold [#LOC] tubes.	$1,416
3365-0043	Triple Hard Suction Storage Rack. Driver side compartment top. Includes spring hold downs and scuff plates behind spring mounts (as applicable).	$989
3365-0046	The driver side full length tunnel to store (2) 6" x 10' hardsuction hoses. Each to be stored individually and accessed by a vertically hinged diamond plate door with a push-button latch. Door to wired to the door ajar indicator in the cab.	$505
3365-0047	The driver side half length tunnel to store (3) backboards. Each to be stored individually and accessed by a vertically hinged door at rear with a push-button latch. Door to wired to the door ajar indicator in the cab.	$542
3365-0048	Hard Suction Storage Box. Stored below officer side "T" of tank. Includes hinged door with push-button latch.	$245
3365-0051	Portable Tank Storage Box. Located in the officer side hosebed. Includes drop down door (wired to door ajar) w/push-button latches, hosebed style top and nylatron flooring (no divider). Box to hold [#LOC] gallon portable tank.	$1,416
3365-0052	Over the hosebed ladder rack. Includes framing (with a sanded finish) and mounting points. Ladder storage box to be center mounted with diamond plate front box.	$1,772
3365-0056	Ladder storage thru tank for (2) 6" x 10' hardsuction hoses, (2) pike poles and (1) 10' attic ladder. Provide retaining straps to hold the hardsuctions stationary when stored. Reduces selected water tank capacity by approximately 250 gallons.	$2,816
3365-0057	The driver side full length tunnel to store (3) 6" x 10' hardsuction hoses. Each to be stored individually and accessed by a vertically hinged access door with a push-button latch. Door to wired to the door ajar indicator in the cab.	$758
3365-0058	Recessed pike pole storage compartment located [#LOC]. Compartment sized to store (3) pike poles.	$600
3365-0059	SCBA/Fire Extinguisher storage rack. Locate in [#LOC]. To hold (4) bottles- (2) wide/(2)high. Bottles to be stored angled upward in the compartment. The bottom and sides are to include ribbed rubber inserts.	$301
3365-0060	Ladders to be enclosed in pump compartment. Smooth plate box to enclose ladders in pump area.	$408
3365-0061	Hard Suction Storage Racks. Driver side hosebed side with adjustable tracks. Includes spring hold downs and scuff plates behind spring mounts (as applicable)	$764
3365-0062	Hard Suction Storage Box. Stored below driver side "T" of tank. Includes DP hinged door with push-button latch.	$641
3365-0063	Hard Suction Storage Box. Stored below officer side "T" of tank. Includes DP hinged door with push-button latch.	$641
3365-0065	(4) Hard Suction Storage Racks. Driver side hosebed side with adjustable tracks. Includes spring hold downs and scuff plates behind spring mounts (as applicable)	$1,211
3365-0066	The driver side half length tunnel to store (1) stokes basket and (2) backboards. Each to be stored individually and accessed by a vertically hinged diamond plate door with a push-button latch. Door to wired to the door ajar indicator in the cab.	$542
3365-0070	Recessed folding ladder and pike pole storage compartment located below officer side "T" of the tank. Compartment sized to store a 10' ladder with feet and (2) pike poles.	$1,168
3365-0073	(4) 6' pike pole storage tubes in the rear transverse compartment ceiling mounted. Locate for compartment L3 access with pike pole hooks stored in the down position. (1) pike pole caution tags to be provided, one each side mounted inside the compartment at the offset.	$936
3365-0074	SCBA/Fire Extinguisher storage rack. Locate in [#LOC]. To hold (6) bottles- (3) wide/(2)high. Bottles to be stored angled upward in the compartment. The bottom and sides are to include ribbed rubber inserts.	$450
3365-0075	Officer side vertical storage tunnel. For use with low hosebed. Tunnel to hold: [#LOC]. Includes vertically hinged rear diamond plate door(s) with push-button latch.	$1,779
3365-0077	(2) pike pole storage tubes. Locate outboard side of rack with pike pole hooks stored in the up position.	$390
3365-0078	(3) pike pole storage tubes. Locate outboard side of rack with pike pole hooks stored in the up position.	$584
3365-0079	2-Arm Ladder Rack on Officer Side. The ladder rack includes amber lights on each end to visually indicate when the rack is in motion. Restricts the top folding step (if optioned) from closing completely. Includes mounting bracket (if required, matching rear compartment face or compartment wrap finish) for components mounted on rear compartment face.	$13,137
3365-0081	2-Arm Ladder Rack to be painted job color.	$2,633
3365-0083	Zico pike pole mounting brackets (PR). Locate [#LOC].	$145
3365-0085	Zico pike pole mounting brackets with straps (PR). Locate [#LOC].	$162
3365-0088	Double hard suction hose storage tray. Locate on inboard side of overhead ladder rack. Includes (2) securing straps per tray.	$728

3365-0090	Officer side half length vertical storage tunnel. For use with low hosebed. Tunnel to hold: (2) backboards, (1) AEL 12' 2-section ladder, (1) 4' D-handled pike pole, (1) 8' pike pole and (1) 6' pike pole. Includes vertically hinged rear diamond plate door with push-button latch. Pike poles to be located down low in tunnel with backboards and ladder located above.	$1,337
3365-0091	Recessed folding ladder storage compartment located officer side just below hosebed. Compartment sized to store a 10' ladder with feet.	$594
3365-0092	(2) pike pole storage tubes. Locate in driver side roof top compartment with pike pole hooks stored in the up position.	$390
3365-0096	Zico Hydraulic Drop Down Ladder Rack. Includes diamond plate spacer brackets with ladder rack controller located on the officer side pump panel.	$4,414
3365-0097	12' Hard suction hose storage tray. Locate on inboard side of overhead ladder rack. Includes (2) securing straps.	$455
3365-0098	12' Hard Suction Storage Rack. Driver side compartment top. Includes spring hold downs and scuff plates behind spring mounts (as applicable)	$497
3365-0099	SCBA/Fire Extinguisher storage rack. Locate in R1 mounted to lower ceiling below compartment offset. To hold (4) bottles to be stored angled upward in the compartment. The bottom and sides are to include ribbed rubber inserts. Each storage slot to be 11" wide x 11" high.	$1,564
3365-0100	Hard Suction Storage Rack. Officer side compartment top. Includes spring hold downs and scuff plates behind spring mounts (as applicable). Rack to hold 5' hard suction.	$226
3365-0101	Officer side vertical storage tunnel. For use with low hosebed. Lower section of tunnel to hold: 2-Section 24', 14' roof, 10' attic and (2) pike poles. Upper section of tunnel to hold: 2-Section AEL-10 attic ladder and (1) 300' of 1.75" DJ hose. Upper section includes ladder stop 90" back from opening and bolt-in divider between ladder and hose storages. Includes vertically hinged rear diamond plate door(s) with push-button latch(es). The diamond compartment top of tunnel to be hinged for access to dry lay of hose.	$2,833
3365-0102	SCBA/Fire Extinguisher storage rack. Locate in [#LOC]. To hold (4) bottles- (4)wide/(1)high. Bottles to be stored angled upward in the compartment. The bottom and sides are to include ribbed rubber inserts.	$301
3365-0103	SCBA/Fire Extinguisher storage rack. Locate in [#LOC]. To hold (6) bottles- (6)wide/(1)high. Bottles to be stored angled upward in the compartment. The bottom and sides are to include ribbed rubber inserts.	$450
3365-0104	Double hard suction hose storage tray. Locate (1) each side on inboard side of overhead ladder rack(s). Includes (2) securing straps per tray. For use with 13' hard suction hoses.	$1,999
3365-0107	SCBA/Fire Extinguisher storage rack. Locate in [#LOC]. To hold (12) bottles- (4) wide/(3)high. Bottles to be stored angled upward in the compartment. The bottom and sides are to include ribbed rubber inserts.	$901
3365-0108	10' folding ladder with feet. Locate in officer side roof top compartment.	$594
3365-0109	(4) pike pole storage tubes. Locate inboard side of rack with pike pole hooks stored in the up position.	$777
3365-0110	Recessed pike pole storage compartment located below officer side "T" of the tank. Compartment sized to store (3) pike poles.	$600
3365-0111	Hard suction hose storage tray. Locate on [#LOC]. Includes (2) securing straps. For use with 13' hard suction hoses.	$877
3365-0112	Over the hosebed ladder rack. Includes framing (with a sanded finish) and mounting points. Ladder storage box to be adjustable side to side with diamond plate front box. The ladder storage rack to have locking points of driver side outboard, center and officer side outboard. The framework of the ladder rack to be 9.5" high.	$2,742
3365-0114	Recessed pike pole storage compartment located [#LOC]. Compartment sized to store (3) pike poles. Pike pole box to be 7" deep.	$1,094
3365-0115	Ladder storage thru tank for (1) 2-section 24' extension, (1) 14' roof, (1) 10' attic with feet and (3) pike poles. Reduces selected water tank capacity by approximately 250 gallons.	$2,566
3365-0116	Ladder tunnel to extend to rear of body (over pump/plumbing). Extension to be aluminum and bolt-on for removal for pump maintenance.	$739
3365-0118	(3) pike pole storage tubes. Locate [#LOC].	$428
3365-0120	SCBA/Fire Extinguisher storage rack. Locate in [#LOC]. To hold (12) bottles- (6) wide/(2)high. Bottles to be stored angled upward in the compartment. The bottom and sides are to include ribbed rubber inserts.	$901
3365-0122	Officer side vertical storage tunnel. For use with low hosebed. Tunnel to hold: 2-Section 24', 14' roof, 10' attic and (2) pike poles. Upper storage area to have hinged diamonad plate top for storage of misc. items. Includes vertically hinged rear diamond plate door(s) with D-ring latch.	$2,749
3365-0124	Recessed pike pole storage compartment located below officer side compartment top. Compartment sized to store (2) pike poles. Recessed box to be 10" high for Boston Roof Hooks.	$911
3365-0125	Officer side vertical storage tunnel. For use with low hosebed. Tunnel to hold: 2-Section 24', 14' roof, 10' attic, (6) pike poles and (2) 6" x 10' hardsuction hoses (individually vertically stacked). (2) pike poles will be in ladder tunnel and (2) in each hard suction storage. Includes vertically hinged rear diamond plate door(s) with push-button latch.	$2,522
3365-0128	(1) pike pole storage tubes. Locate [#LOC].	$143
3365-0129	Officer side half length vertical storage tunnel. For use with low hosebed. Tunnel to hold: (2) backboards, (1) 4' D-handled pike pole, (1) 8' pike pole and (1) 6' pike pole. Make box for 4' D-handle pike pole 56" long. Includes vertically hinged rear diamond plate door with push-button latch. Pike poles to be located down low in tunnel with backboards located above.	$1,337
3365-0130	Zico Electric Drop Down Fold-A-Tank Rack. Rack to be capable to hold [#LOC] gallon portable tank. Locate on driver side of body. Includes diamond plate cover and mounting hardware.	$8,005
3365-0134	Double Hard Suction Storage Rack. Driver side compartment top. Includes spring hold downs with scuff plates (as applicable). For use with 11' hard suction hoses.	$1,170
3365-0135	Stop bracket set for Zico HLAS ladder rack. Optional bracket for additional ladder rack stability in the up position.	$191
3365-0137	Pike pole. Locate (1) pike pole on officer side compartment top with pike pole hook stored in the up position. Mount with tulip clip(s) for use with D-handle pike pole.	$83
3365-0138	SCBA/Fire Extinguisher storage rack. Locate in [#LOC]. To hold (9) bottles- (3) wide/(3)high. Bottles to be stored angled upward in the compartment. The bottom and sides are to include ribbed rubber inserts.	$676

3365-0142	Officer side hosebed storage box to store a (1) 26' 3-section, (1) 12' roof, (1) 10' attic ladder and (3) pike poles. Includes vertically hinged rear diamond plate door with push-button latches.	$2,524
3365-0143	Hard Suction Storage Rack. Locate: [#LOC]. Includes (1) spring hold down and scuff plates behind spring mount (as applicable). Includes diamond plate box with air deflector to hold end of hose in place.	$664
3365-0148	Backboard Storage Box. Located in the driver side hosebed. Includes drop down door (wired to door ajar) w/push-button latch, hosebed style top and composite flooring. Box to hold (1) backboard. Includes stop bracket approximately 74" back from opening. Includes short hosebed divider located on top of storage area.	$1,606
3365-0163	Hard Suction Storage Box. Located in the [#LOC] hosebed. Includes vertically hinged door (wired to door ajar) w/push-button latches and nylatron flooring. Box to hold two (2) 10' hard suction hoses.	$1,416
3365-0164	Backboard Storage Box. Located in the officer side hosebed. Includes drop down door (wired to door ajar) w/push-button latch, hosebed style top and composite flooring. Box to hold (1) backboard. Includes stop bracket approximately 74" back from opening. Includes 45 degree angle plate at rear of the backboard storage.	$1,606
3365-0165	Double Hard Suction Storage Rack. Officer side compartment top. Includes spring hold downs with scuff plates (as applicable).	$659
3365-0173	Hard Suction Storage Box. Stored below officer side just below the hosebed. Includes hinged door with push-button latch.	$527
3370-0023	Tracks for adjustable shelf and/or adjustable tray in single depth or rescue style single depth compartment. Location: [#LOC].	$165
3370-0025	Permanent shelf. Locate in [#LOC].	$86
3370-0026	Adjustable shelf. For compartments that are full height/full depth or lower compartments with full depth. Location: [#LOC].	$214
3370-0027	Tracks for adjustable shelf and/or adjustable tray in the lower area of the compartment. Location: [#LOC].	$84
3370-0028	Tracks for adjustable shelf and/or adjustable tray in the upper area of the compartment. Location: [#LOC].	$44
3370-0029	Adjustable shelf. For compartments with upper shallow depth. Location: [#LOC].	$108
3370-0032	Upper shelf floor overlays. Includes 1/8" smooth plate full width and length of shelf and spaced .5" off shelf floor. Locate: (2) L1, (2) L3, (2) R1, (2) R3 and (1) over top of L1 tool box.	$988
3370-0033	Adjustable shelf modification for shelf to have 1" lips. Location: B1 below upper shelf.	$96
3370-0037	Horizontal tracks in the upper area of the compartment. Location: [#LOC].	$65
3370-0046	Adjustable shelf. Shelf to be notched into extended side compartment area. For compartments with upper shallow depth. Location: R3 upper.	$411
3370-0048	Adjustable shelf with 2" lips around entire shelf. For compartments that are full height/full depth or lower compartments with full depth. Location: [#LOC].	$461
3370-0050	Tracks for adjustable shelf and/or adjustable tray in transverse compartment. Location: B1.	$328
3370-0052	Adjustable shelf. For non-transverse compartments that are 16" or greater in depth. Location: [#LOC].	$214
3370-0053	Adjustable shelf. For non-transverse compartments that are up to 15.99" deep. Location: [#LOC].	$108
3370-0054	Tracks for adjustable shelf and/or adjustable tray in compartments 16" or greater in depth. Location: [#LOC].	$165
3370-0055	Tracks for adjustable shelf in shallow compartments up to 15.99" deep. Location: [#LOC].	$84
3370-0056	Tracks for adjustable shelf and/or adjustable tray in compartments 16" or greater in depth. Tracks to run from floor to just below compartment offset/ceiling. Location: [#LOC].	$165
3370-0057	Tracks for adjustable shelf in shallow compartments up to 15.99" deep. Tracks to run from floor/compartment offset tube to just below compartment ceiling. Location: [#LOC].	$84
3370-0063	Tracks for electrical cord reel in the upper area of the compartment. Location: [#LOC].	$83
3370-0065	Tracks for adjustable shelf and/or adjustable tray in single depth or rescue style single depth compartment. Track to be 1" from ceiling and floor (as applicable, due to interferences of other compartment mounted items). Location: [#LOC].	$165
3380-0014	Roll-out generator tray. Includes tray interlock. Locate [#LOC].	$697
3380-0015	Fixed back wall mounted toolboard. Toolboard to be spaced off wall a half inch. Location(s): [#LOC]	$192
3380-0017	Floor mounted roll-out/tilt down tray. Mount on [#LOC] floor.	$982
3380-0018	Adjustable tool board. Includes upper and lower adjustable track and gas shock actuated. Tool board sized to compartment height and depth as applicable. Location(s): [#LOC]	$721
3380-0019	Running board suction tray. Includes removable slats in bottom of tray. Location(s): [#LOC]	$459
3380-0021	Hard suction hose storage tray. Locate on inboard side of overhead ladder rack. Includes (2) securing straps.	$366
3380-0022	Floor mounted roll-out tray. Includes 500lbs. tray capacity. Location: [#LOC].	$764
3380-0023	Adjustable mounted roll-out/tilt down tray. Location(s): [#LOC]	$1,241
3380-0024	Adjustable mounted roll-out tray. Includes 250 lbs tray capacity. Location(s): [#LOC]	$842
3380-0025	Adjustable mounted roll-out tray. Includes 500 lbs tray capacity. Location(s): [#LOC]	$1,022
3380-0027	Floor mounted Slide Master with tray. Model SM3-SP. Single depth. Mount on [#LOC] floor.	$787
3380-0028	Adjustable mounted Slide Master with tray. Model SM3-SP. Single depth. Location(s): [#LOC]	$1,043
3380-0029	Floor mounted bi-directional Slide Master with tray. Model SM2-D-SP. Mounted on [#LOC].	$1,356
3380-0030	Adjustable mounted bi-directional Slide Master with tray. Model SM2-D-SP. Mounted in transverse area of [#LOC].	$1,612
3380-0033	Hard suction hose storage tray. Locate on top of Zico Drop Down Ladder Rack.	$732
3380-0036	Fixed back wall mounted peg toolboard. Toolboard to be spaced off wall a half inch. Location(s): [#LOC]	$231
3380-0038	Floor mounted roll-out tray with Jonathan Slides. Includes 400lbs. tray capacity. Mount on [#LOC] floor.	$1,338
3380-0039	Adjustable mounted roll-out tray with Jonathan Slides. Includes 400 lbs tray capacity. Location(s): [#LOC]	$1,594
3380-0040	Vertically hinged swing-out toolboard. Location: [#LOC]. Hinge along forward compartment wall and position centered between door and back wall. Includes latch to secure in the closed position that is accessable from the ground.	$1,357
3380-0041	Pac Trac panels vertically stacked on back wall of compartment. Locate: [#LOC].	$700
3380-0043	Toolbox with slide out trays L1 offset forward. To include (4) individual trays mounted on slides. Reference photos and drawings in engineering file. Each tray to lock in and lock out. Include a 3/16" permanent shelf located directly above top of toolbox. Includes cover plate between tool box and forward compartment wall.	$2,485
3380-0049	Running board suction tray (floating style). Includes tapered 3" front corner and removable slats in bottom of tray. Location(s): [#LOC]	$596
3380-0050	Floor mounted double stacked tray with 500# slides in B1.	$946

3380-0055	Floor mounted roll-out/tilt down tray with aluminum frame. Mount on [#LOC] floor.	$956
3380-0056	Adjustable mounted roll-out/tilt down tray with aluminum frame. Location(s): [#LOC]	$1,212
3380-0059	Running board suction tray. Outboard (front) wall of tray and rubrail hinged at the bottom with quick release latches for drop down door. Includes tapered 3" front corner and removable slats in bottom of tray. Location(s): [#LOC]	$742
3380-0060	Adjustable tool board with 500 lbs slides. Includes upper and lower adjustable track and gas shock actuated. Tool board sized to compartment height and depth as applicable. Location(s): [#LOC].	$992
3380-0061	Compartment underbody. Includes drop down front door with D-ring latches. Locate [#LOC].	$1,342
3380-0062	Adjustable peg tool board. Includes upper and lower adjustable track and gas shock actuated. Tool board sized to compartment height and depth as applicable. Location(s): [#LOC].	$866
3380-0063	Ready Respond Storage cabinet. Includes (5) drawers with gray fronts. No side trim required. Locate floor mounted in [#LOC].	$3,558
3380-0064	Floor mounted roll-out tray. Includes 250lbs. tray capacity. Mount on B1 floor. Front and rear lips of tray to be 9.5".	$1,638
3380-0065	Vertically hinged swing-out toolboard. Location: [#LOC]. Hinge along forward compartment wall and position centered between door and back wall. Includes D-Ring latch to secure in the closed position that is accessable from the ground.	$1,357
3380-0067	Poly box(s) to be located [#LOC]. Box(s) depth (front to rear) to be sized for placement on floor/shelf or tray as applicable to compartment options. Box sized [#COL]	$286
3380-0068	Floor mounted equally sized roll-out trays (PR). Includes 250lbs. tray capacity. Mount on [#LOC] floor.	$1,169
3380-0072	Running board suction tray. Includes removable slats in bottom of tray. Tray to be as long as possible. Location(s): [#LOC].	$917
3380-0073	Slidemaster frame powder coated silver. Location(s): [#LOC]	$98
3380-0074	Tool board HD adjustable. Includes return style re-enforcing bends on vertical front and rear edges of tool board, upper and lower adjustable track and gas shock actuated. Tool board sized to compartment height and depth as applicable. Location(s): [#LOC]	$770
3380-0075	Running board suction tray (floating style). Includes tapered 3" front corner and removable slats in bottom of tray. Tray to be as long as possible. Location(s): [#LOC].	$894
3380-0076	Floor mounted roll-out tray with 500lbs capacity. Mount on [#LOC] floor.	$585
3380-0077	Adjustable roll-out tray with 500 lbs capacity. Location(s): [#LOC]	$842
3380-0078	Compartment underbody with slide-out tray. Includes drop down front door with push button latch(es). [#LOC]	$1,662
3380-0079	Adjustable heavy duty tool board. Includes return style re-enforcing bends on vertical front and rear edges of tool board, upper and lower adjustable track and gas shock actuated. Tool board sized to compartment height and depth as applicable. Location(s): [#LOC]	$770
3380-0080	Adjustable heavy duty peg tool board. Includes return style re-enforcing bends on vertical front and rear edges of tool board, upper and lower adjustable track and gas shock actuated. Tool board sized to compartment height and depth as applicable. Location(s): [#LOC]	$916
3380-0081	Roll-out generator tray. Includes tray interlock. Locate [#LOC].	$697
3380-0082	Slidemaster frame powder coated black (EA). Location: [#LOC].	$133
3380-0085	Slide Master Tray in transverse. A slide master tray to be mounted in the transverse module. Tray to extended 70% either side. Top tray to hold four (4) removable speedlay trays (lower tray on slide master to have higher lips on sides and lower on sides for easier removal of trays). Each tray to have the following capacity: (1) 200' of 1.75", (1) 200' of 1.75", (1) 200' of 2.5" and last tray to hold 100' of 1.75", 100' of 1.75" and 100' of 2.5".	$2,807
3380-0086	Vertically hinged swing-out pegboard toolboard. Location: [#LOC]. Hinge along forward compartment wall and position centered front to rear. Includes latch to secure in the closed position that is accessable from the ground.	$1,438
3380-0087	Adjustable tool board with 500 lbs slides for use with deep compartments. Includes upper and lower adjustable track with lock in / lock out latch. Tool board sized to compartment height and depth as applicable. Location(s): [#LOC].	$992
3390-0001	Compartment [#LOC] to have the following storage package: (1) vertical partition 20" off forward wall and the following located forward of the partition: (1) floor mntd roll-out tray w/250lb slds and (2) adjustable shelves. Rearward of partition: (2) adjustable tool boards.	$2,606
3390-0002	Compartment [#LOC] to have the following storage package: (1) vertical partition centered off forward wall and the following located forward of the partition: (1) floor mntd roll-out tray w/250lb slds and (2) adjustable shelves. Rearward of partition: (2) adjustable tool boards.	$2,606
3390-0003	Compartment [#LOC] to have the following storage package: (1) vertical partition 20" off rearward wall and the following located forward of the partition: (1) floor mntd roll-out tray w/250lb slds and (2) adjustable shelves. Rearward of partition: (1) adjustable tool board.	$2,606
3390-0004	Compartment [#LOC] to have the following storage package: (1) vertical partition 20" off forward wall and the following located forward of the partition: (1) floor mntd roll-out tray w/250lb slds, (1) adjustable roll-out tray w/250lb slds and (1) adjustable shelf. Rearward of partition: (3) adjustable tool boards.	$3,908
3390-0005	Compartment [#LOC] to have the following storage package: (1) vertical partition centered off forward wall and the following located forward of the partition: (1) floor mntd roll-out tray w/250lb slds, (1) adjustable roll-out tray w/250lb slds and (1) adjustable shelf. Rearward of partition: (3) adjustable tool boards.	$3,908
3390-0006	Compartment [#LOC] to have the following storage package: (1) vertical partition 20" off rearward wall and the following located forward of the partition: (1) floor mntd roll-out tray w/250lb slds, (1) adjustable roll-out tray w/250lb slds and (1) adjustable shelf. Rearward of partition: (1) adjustable tool board.	$2,470
3390-0007	Compartment [#LOC] to have the following storage package: (1) vertical partition 20" off forward wall and the following located forward of the partition: (1) permanent shelf centered, (1) floor mntd roll-out tray w/250lb slds and (2) adjustable shelves (above permanent shelf). Rearward of partition: (1) permanent shelf 18" off floor, (1) floor mntd roll-out tray w/250lb slds (below permanent shelf) and (2) adjustable tool boards (above the permanent shelf).	$3,250

3390-0008	Compartment [#LOC] to have the following storage package: (1) vertical partiton centered off forward wall and the following located forward of the partiton: (1) permanent shelf centered, (1) floor mntd roll-out tray w/250lb slds and (2) adjustable shelves. Rearward of partition: (1) permanent shelf 24" off floor, (1) floor mntd roll-out tray w/250lb slds (below permanent shelf) and (2) adjustable tool boards (above the permanent shelf).	$3,250
3390-0009	Compartment [#LOC] to have the following storage package: (1) vertical partition 20" off rearward wall and the following located forward of the partition: (1) permanent shelf centered, (1) floor mntd roll-out tray w/250lb slds and (2) adjustable shelves. Adjustable tracking to be provided above (as applicable) and below permanent shelf. Rearward of partition: (1) adjustable tool board.	$2,062
3390-0010	Compartment [#LOC] to have the following storage package: (1) vertical partition 20" off forward wall and the following located rearward of the partition: (1) permanent shelf 15" off floor, (1) floor mntd roll-out tray w/250lb slds (below permanent shelf) and (2) adjustable tool boards (above the permanent shelf).	$2,205
3390-0011	Compartment [#LOC] to have the following storage package: (1) vertical partition 20" off rearward wall and the following located forward of the partition: (1) permanent shelf 15" off floor, (1) floor mntd roll-out tray w/250lb slds (below permanent shelf) and (2) adjustable tool boards (above the permanent shelf).	$2,205
3390-0012	Compartment [#LOC] to have the following storage package: (2) vertical partions- (1) 18" off forward and (1) 18" off rearward wall and the following located forward of the forward partion: OPEN. Centered between partions: (1) permanent shelf 24" off floor, (1) floor mntd roll-out tray w/250lb slds (below permanent shelf) and (2) adjustable tool boards (above the permanent shelf). Rearward of the rear partion: OPEN.	$2,266
3390-0017	Compartment L3 to have the following: (1) vertical peg board partition located 16.5" off rear wall (full height and depth as applicable), (1) peg board toolboard rwd of partion in the upper and lower area spaced off back wall .5", (1) peg board toolbard on rearward wall (full height and depth as applicable) spaced off rearward wall .5" and (2) adjustable shelves with adjustable tracking upper fwd area of partion. Includes access panel on rearward wall in lower section. Includes Dri-Dek brand Red floor matting covering the top of tool box.	$809
3390-0019	Compartment L1 to have the following: (1) vertical partion located next to the SCBA tubes, (3) vertically stacked SCBA storage tubes and (2) adjustable shelves with track (forward of the partion).	$891
3390-0020	Compartment L3 to have the following: (1) vertical partion located 16" off rear wall roll-up door track- NOT interior compartment wall (full height and depth as applicable), forward of partion: (1) adjustable shelf (upper) and (1) fixed shelf at offset.	$883
3390-0021	Compartment [#LOC] to have the following storage package: (1) vertical partition 20" off rearward wall and the following located forward of the partition: (1) floor mntd roll-out tray w/250lb slds and (1) adjustable shelf. Rearward of partition: (2) adjustable tool boards.	$2,395
3390-0022	Compartment R3 to have the following: (2) adjustable shelves upper area and (1) adjustable lower area shelf. All sheves to be notched into extended side compartment area.	$636
3390-0024	Compartment R2 to have the following: (1) vertical partition centered, (1) adjustable shelf with adjustable tracking forward of partition, (1) bolt-in floor with 2" raise rearward of partition for cribbing storage. Bolt-in floor is in addition to the existing DP floor.	$756
3390-0025	Compartment R1 to have the following: (1) vertical partition located 24" off rearward wall in lower section and (1) adjustable shelves with adjustable tracking rearward area of partition 24" off compartment floor.	$561
3390-0028	Compartment L1 to have the following storage package: (1) vertical partition 12" off forrward wall and the following located forward of the partition: (1) adjustable tool board. Rearward of partition: (1) floor mntd roll-out tray w/250lb slds, (1) adjustable roll-out tray w/250lb slds and (1) adjustable roll-out tilt down tray.	$3,545
3390-0029	Compartment L2 to have the following storage package: (1) vertical partition 12" off forrward wall and the following located forward of the partition: (4) adjustable shelves. Rearward of partition: (2) adjustable tool boards.	$2,449
3390-0030	Compartment L1 to have the following storage package. Upper compartment area to hold: (1) permanent shelf located just below the breaker box with (1) vertical partition located 14" off forward wall mounted to permanent shelf and (2) adjustable shelves with tracking rearward of partition. Lower compartment area to hold: (2) adjustable roll-out tray w/250lb slides.	$2,586
3390-0031	Compartment L3 to have the following storage package: (1) vertical partition 36" off forward wall and the following located forward of the partition: (1) floor mntd roll-out tray w/250lb slides and (2) adjustable shelves.	$1,779
3390-0032	Compartment R3 to have the following storage package: (1) vertical partition 36" off forward wall and the following located forward of the partition: (1) floor mntd roll-out tray w/250lb slides and (1) adjustable shelf.	$1,151
3390-0033	Compartment R3 to have the following: Forward area: (3) adjustable toolboards even spaced off forward wall, provide approx. 24" of adjustable track for toolboards. Rearward area: (1) floor mounted 250# roll-out tray to hold Speedy Dry Hopper. Tray to have notch on front wall for Speedy Dry Hopper valve to hold #100 pounds.	$2,812
3390-0034	Compartment L1 to have the following storage package: (1) vertical partiton centered off forward wall and the following located forward of the partiton: (2) adjustable shelves. Rearward of partition: (1) adjustable tool boards.	$1,499
3390-0035	Compartment L3 to have the following storage package: (1) vertical partition 20" off rearward wall and the following located forward of the partition: (1) fixed shelf at compartment offset, (1) floor mounted roll-out tray w/500lb slides and (1) adjustable shelf with tracks in the lower area.	$1,891
3390-0036	Compartment R3 to have the following storage package: (1) vertical partition 20" off rearward wall and the following located forward of the partition: (1) fixed shelf at compartment break.	$812
3390-0041	Compartment R1 to have the following: (1) vertical partition located 24" off rearward wall and (1) adjustable shelf with adjustable tracking forward area of partition.	$561
3390-0044	Compartment L1 to have the following storage package: (1) vertical partition centered off forward wall and the following located forward of the partition: (3) adjustable shelves. Rearward of partition: (3) adjustable shelves.	$1,773
3390-0045	Compartment L3 to have the following storage package: (1) vertical partition 24" off forward wall and the following located forward of the partition: (1) floor mntd roll-out tray w/250lb slds and (2) adjustable shelves. Rearward of partition: (2) adjustable tool boards.	$2,606
3390-0046	Compartment R3 to have the following: (1) permanent shelf located at compartment break with (1) vertical partition located 18" off forward wall mounted to bottom of permanent shelf and (1) floor mounted #250 roll-out tray rearward of partition.	$861
3390-0051	Compartment [#LOC] to have the following storage package: (1) vertical partition 20" off forward wall and the following located forward of the partition: (2) adjustable shelves. Rearward of partition: (2) adjustable tool boards.	$2,023

3390-0052	Compartment [#LOC] to have the following storage package: (1) vertical partition 24" off forward wall and the following located forward of the partition: (1) permanent shelf centered, (1) floor mntd roll-out tray w/250lb slds and (2) adjustable shelves (above permanent shelf). Rearward of partition: (1) permanent shelf 18" off floor, (1) floor mntd roll-out tray w/250lb slds (below permanent shelf) and (2) adjustable tool boards (above the permanent shelf).	$3,250
3390-0054	Compartment [#LOC] to have the following storage package: (1) vertical partition 20" off forward wall and the following located forward of the partition: (3) adjustable shelves. Rearward of partition: (2) adjustable tool boards.	$2,434
3390-0055	Compartment [#LOC] to have the following storage package: (1) vertical partition 14" off rearward wall and the following located forward of the partition: (1) adjustable shelf with tracks, (1) floor mounted Slide Master with tray model SM3-SP slides and (1) adjustable roll-out tray w/250lb slides.	$2,192
3390-0059	Compartment [#LOC] to have the following storage package: (1) vertical partition 18" off rearward wall and the following located forward of the partition: (1) adjustable shelves.	$384
3390-0060	Compartment [#LOC] to have the following: (1) vertical partition located 10" off rearward wall (full height and depth as applicable). Forward of vertical partition: (1) fixed back wall mounted peg toolboard in the upper section and spaced off back wall .5" and (1) permanent shelf at offset.	$498
3390-0062	Compartment [#LOC] to have the following storage package: (1) vertical partition 20" off rearward wall and the following located forward of the partition: (2) adjustable peg tool boards. Rearward of partition: (1) floor mntd roll-out tray w/250lb slds and (2) adjustable shelves.	$2,899
3390-0063	Compartment [#LOC] to have the following storage package: (1) vertical partition 20" off rearward wall and the following located forward of the partition: (2) adjustable peg tool boards. Rearward of partition: (3) adjustable shelves.	$2,528
3390-0067	Compartment [#LOC] to have the following storage package: (1) vertical partition centered off forward wall and the following located forward of the partition: (2) adjustable tool boards. Rearward of partition: (2) adjustable shelf.	$2,009
3390-0068	Compartment [#LOC] to have the following storage package: (1) vertical partition 20" off rearward wall and the following located forward of the partition: (1) adjustable shelf. Rearward of the partition: (1) floor mounted 250# roll-out tray to hold Speedy Dry Hopper. Tray to have notch on front wall for Speedy Dry Hopper valve. Hopper to hold #100 pounds.	$2,473
3390-0070	Compartment [#LOC] to have the following storage package: (1) vertical partition 20" off rearward wall and the following located forward of the partition: (1) floor mntd roll-out tray w/250lb slds and (3) adjustable shelves. Rearward of partition: (1) adjustable tool board.	$2,298
3390-0071	Compartment R3 to have the following storage package: (1) full width permanent shelf 20" off compartment floor with (1) vertical partition 22" off rearward wall below permanent shelf.	$398
3390-0074	Compartment [#LOC] to have the following storage package: (1) vertical partition 14" off rearward wall and the following located forward of the partition: (1) floor mntd roll-out tray w/250lb slds, (1) adjustable roll-out tray w/250lb slds and (1) adjustable shelf. Rearward of partition: (2) adjustable tool board.	$3,433
3390-0079	Compartment L1 to have the following: (1) permanent shelf located at compartment break with (1) vertical partition located 18" off rearward wall mounted to top of permanent shelf and the following located rearward of the partition: (2) adjustable shelves. Lower area to hold: (1) floor mntd roll-out tray w/250lb slds.	$1,122
3390-0080	Compartment L3 to have the following: (1) vertical partition located 14" from forward wall and (2) adjustable shelves with adjustable tracking forward of partition.	$782
3390-0082	Compartment [#LOC] to have the following storage package: (1) vertical partiton centered off forward wall and the following located forward of the partiton: (2) adjustable shelves. Rearward of partition: (3) adjustable shelves, (1) floor mntd roll-out tray w/250lb slds and (2) adjustable roll-out tray w/250lb slds.	$3,855
3390-0083	Compartment [#LOC] to have the following storage package: (1) vertical partition centered off forward wall and the following located forward of the partition: (1) floor mntd roll-out tray w/250lb slds, (1) adjustable roll-out tray w/250lb slds and (2) adjustable shelves. Rearward of partition: (2) adjustable tool boards.	$3,651
3390-0084	Compartment [#LOC] to have the following storage package: (1) vertical partition 18" off rearward wall and the following located forward of the partition: (1) floor mntd roll-out tray w/250lb slds and (2) adjustable shelves.	$1,369
3390-0086	Compartment [#LOC] to have the following storage package: (1) vertical partition 30" off forward wall and the following located forward of the partition: (1) floor mntd roll-out tray w/250lb slds, (1) adjustable roll-out/tilt down tray w/250lb slds and (1) adjustable shelf. Rearward of partition: (1) adjustable tool boards.	$3,115
3390-0088	Compartment [#LOC] to have the following storage package: (1) vertical partition 30" off forward wall and the following located forward of the partition: (1) adjustable toolboard. Rearward of partition: (3) adjustable shelves.	$1,633
3390-0089	Compartment [#LOC] to have the following storage package: (1) vertical partition 22" off forward wall and the following located rearward of the partition: (1) adjustable shelf.	$488
3390-0090	Compartment [#LOC] to have the following storage package: (1) vertical partition 14" off rearward wall and the following located forward of the partition: (1) adjustable shelf. Rearward of partition: (1) adjustable toolboard.	$1,208
3390-0091	Compartment [#LOC] to have the following storage package in the lower full depth area: (1) vertical partition centered off forward wall and the following located forward of the partition: (1) adjustable shelf.	$488
3390-0092	Compartment [#LOC] to have the following storage package: (1) vertical partition 18" off driver side wall and the following located to the officer side of the partition: (2) adjustable shelves.	$701
3390-0093	Compartment [#LOC] to have the following storage package: (1) vertical partition 20" off forward wall and the following located forward of the partition: (2) adjustable shelves. Rearward of partition: (2) adjustable peg tool boards.	$2,293
3390-0095	Compartment [#LOC] to have the following storage package: (1) vertical partition 24" off forward wall and the following located forward of the partition: (1) floor mntd roll-out tray w/250lb slds and (2) adjustable shelves. Rearward of partition: (1) adjustable tool board.	$2,092
3390-0096	Compartment [#LOC] to have the following storage package: (1) vertical partition 14" off rearward wall and the following located forward of the partition: (1) floor mntd roll-out tray w/500lb slides, (1) adjustable roll-out tray w/500lb slides and (1) adjustable shelf with tracks.	$2,358
3390-0097	Compartment [#LOC] to have the following storage package: (2) adjustable roll-out tray w/500lb slides, (1) adjustable shelf with tracks and (1) SCBA/Fire Extinguisher storage rack floor mounted to hold (4) bottles to be stored angled downward in the compartment. The bottom and sides are to include composite material. Each storage slot to be 10" wide x 10" high.	$4,177

3390-0098	Compartment [#LOC] to have the following storage package: (1) air bag storage rack offset rearward and the following located forward of the storage rack: (1) adjustable shelf with tracks and (1) poly box floor mounted. The air bag storage rack to have (6) slots, each slot to be 2"W x 21"H x 24"D. The poly box to be 15"W x 10"H x 24"D..	$1,860
3390-0099	Compartment [#LOC] to have the following storage package: (1) floor mntd roll-out tray w/500lb slides, (1) adjustable roll-out tray w/500lb slides and (2) adjustable shelf with tracks. Floor mounted roll-out tray to have 10" high side walls.	$3,329
3390-0100	Compartment [#LOC] to have the following storage package: (1) vertical partition 12" off rearward wall and the following located forward of the partition: (3) adjustable shelves - (2) shevles located above breaker box and (1) shelf located below. Rearward of partition: (1) adjustable tool board.	$1,713
3390-0101	Compartment [#LOC] to have the following storage package: (1) permanent shelf mounted 18" above compartment floor. Above the permanent shelf: (1) vertical partition located 15" off rearward wall and (1) adjustable toolboard rearward of the vertical partition.	$1,094
3390-0102	Compartment [#LOC] to have the following storage package: (1) vertical pegboard partition 14" off rear wall and the following located forward of the partition: in upper area (2) adjustable shelf and (1) permanent shelf at offset (above extrusion if applicable).	$637
3390-0103	Compartment [#LOC] to have the following storage package in upper area: (2) adjustable shelf. In lower area: (2) adjustable toolboards in forward area, (1) #500 floor mounted roll-out tray in rearward 30" and (1) permanent shelf at offset below extrusion.	$2,550
3390-0109	Compartment [#LOC] to have the following storage package: (1) vertical partition 17" off rearward wall and the following located forward of the partition: (1) floor mntd roll-out tray w/250lb slds and (2) adjustable shelves. Rearward of partition: (1) adjustable tool board.	$2,092
3390-0112	LT/RT storage (upper area of transverse) for customer supplied air bags and plywood storage. Includes a partition located 14" off forward wall, remaining space between partiition and speedlay area for air bag storage.	$1,415
3390-0113	L2 storage for customer supplied air bags and plywood storage. Air bag storage for 8 bags. Appox slot sizes: (1) 4" wide x 6" high x 6" deep, (1) 4" wide x 6" high x 12" deep, (1) 4" wide x 10" high x 10" deep, (1) 4" wide x 15" high x 15" deep, (1) 4" wide x 15" high x 21" deep, (1) 4" wide x 20" high x 20" deep, (1) 4" wide x 24" high x 24" deep and (1) 4" wide x 42" high x 15" deep. Area above to have one vertical partition 24" off foward wall located on fixed shelf above the air bag storage.	$2,791
3390-0114	Compartment [#LOC] to have the following storage package in the lower full depth area: (1) vertical partition located at compartment offset and the following located forward of the partition: (1) floor mntd roll-out tray w/500lb slds and (1) adjustable shelf.	$1,254
3390-0115	Compartment [#LOC] to have the following storage package: (1) Fixed back wall mounted peg toolboard spaced off wall a half inch and (1) adjustable shelf attached to the toolboard..	$573
3390-0116	Compartment [#LOC] to have the following storage package: (1) vertical partition 20" off rearward wall and the following located forward of the partition: (3) adjustable shelves. Rearward of partition: (1) adjustable tool board.	$1,720
3390-0117	Compartment [#LOC] to have the following storage package in full depth lower area: (1) vertical partition 46" off rearward wall and the following located rearward of the partition: (1) adjustable mounted roll-out tray w/500lb slides	$1,248
3390-0120	Compartment [#LOC] to have the following storage package in the lower full depth area: (1) vertical partition located at compartment offset and the following located forward of the partition: (1) floor mntd roll-out tray w/500lb slds and (1) adjustable roll-out tray w/250lb slds.	$1,882
3390-0121	L2 storage for customer supplied air bags and plywood storage. Air bag storage for 9 bags in 5 storage slots. Appox slot sizes: (1) 4" high x 15" wide x 15" deep for 2 air bags, (1) 4" high x 15" wide x 17" deep for 2 air bags, (1) 4" high x 20" wide x 20" deep for 2 air bags, (1) 4" high x 24" wide x 24" deep for 2 air bags and (1) 4" high x 42" wide x 15" deep for 1 air bag. Includes a fixed shelf above the air bag storage.	$2,791
3390-0123	Bolt-in partition wall. Locate 26" back from inside of extrusion of [#LOC] door opening. Partition will run from the front of truck to rear of truck dividing officerside from drivers side of transverse area..	$288
3390-0124	Compartment [#LOC] to have the following storage package: (1) floor mounted 500# roll-out tray to hold Speedy Dry Hopper. Tray to have notch on front wall for Speedy Dry Hopper valve to hold #50 pounds	$1,637
4000	**PUMPS**	
4000-0036	Stainless Steel Victaulics for all Discharge and Intake plumbing	$3,639
4005-0007	Hale Centrifugal Booster PTO Pump - 2 Stage	$14,695
4005-0013	Hale QFLO 750-1250 GPM Pump single stage	$26,163
4005-0014	Hale QMID 1250 GPM single stage Pump	$27,544
4005-0015	Hale QMAX 1000-1250 GPM single stage Pump	$31,987
4005-0016	Hale QMAX 1500-2250 GPM single stage Pump	$32,158
4005-0017	Hale QTWO 1000-1250 GPM two stage Pump	$31,047
4005-0018	Hale QTWO 1500-2000 GPM two stage Pump	$31,874
4005-0019	Waterous CS 750-1250 single stage Pump	$27,847
4005-0020	Waterous CM 750-1250 two stage Pump	$29,606
4005-0021	Waterous CSU 1500-2250 GPM single stage Pump	$34,065
4005-0022	Waterous CMU 1500-2250 GPM two stage Pump	$36,941
4005-0036	Extended Hale Pump 1 Year Warranty in addition to the standard 2 year warranty.	$639
4005-0037	Extended Hale Pump 2 Year Warranty in addition to the standard 2 year warranty.	$1,231
4005-0038	Extended Hale Pump 3 Year Warranty in addition to the standard 2 year warranty.	$1,820
4005-0039	Extended Waterous Pump 3 Year Warranty in addition to the standard 2 year warranty.	$1,549
4005-0040	Pump Portable 500 GPM Hale w/4" Tank-to-pump. Location [#LOC]	$19,685
4005-0052	Hale QMAX 1500-2250 GPM single stage Pump with K Gear Box	$35,001
4005-0057	Hale DSD Pump 750/1500 GPM single stage	$27,773
4005-0060	Hale HPX300 BD26 Hale Portable Pump mounted in pan. W/Remote controls in Cab. Hook up to Chassis Fuel System.	$17,943
4005-0061	Hale AP 500 MGA T-Case Driven single stage Pump.	$18,644
4005-0062	Waterous S100D (1500 GPM) single stage pump. For use with rear mount pump body.	$34,439
4005-0063	Hale QFLO Plus 750-1250 GPM Pump single stage	$37,804

4005-0079	Hale DSD Pump 750/1500 GPM single stage	$24,319
4005-0080	Hale Centrifugal CBP Booster Pump - 1/Stage w/T-CASE	$16,525
4010-0016	530 Gallon "T" Water Tank. Note: Any foam cell(s) will reduce the overall water capacity. Tank capacity is 530 US gallons / 441 Imperial gallons	$4,994
4010-0017	780 Gallon "T" Water Tank. Note: Any foam cell(s) and/or storage options thru the tank will reduce the overall water capacity. Tank capacity is 780 US gallons / 649 Imperial gallons	$5,530
4010-0018	1030 Gallon "T" Water Tank. Note: Any foam cell(s) and/or storage options thru the tank will reduce the overall water capacity. Tank capacity is 1030 US gallons / 857 Imperial gallons	$6,886
4010-0019	1280 Gallon "T" Water Tank. Note: Any foam cell(s) and/or storage options thru the tank will reduce the overall water capacity. Tank capacity is 1280 US gallons / 1065 Imperial gallons	$8,801
4010-0020	1530 Gallon"T" Water Tank. Note: Any foam cell(s) and/or storage options thru the tank will reduce the overall water capacity. Tank capacity is 1530 US gallons / 1273 Imperial gallons	$10,572
4010-0035	530 Gallon "R" Water Tank Note: Any foam cell(s) will reduce the overall water capacity. Tank capacity is 530 US gallon / 441 Imperial gallons.	$4,571
4010-0036	780 Gallon "R" Water Tank. Note: Any foam cell(s) and/or storage options thru the tank will reduce the overall water capacity. Tank capacity is 780 US gallon / 649 Imperial gallons.	$5,463
4010-0037	1030 Gallon "R" Water Tank. Note: Any foam cell(s) and/or storage options thru the tank will reduce the overall water capacity. Tank capacity is 1030 US gallon / 857 Imperial gallons.	$6,651
4010-0038	1280 Gallon "R" Water Tank. Note: Any foam cell(s) and/or storage options thru the tank will reduce the overall water capacity. Tank capacity is 1280 US gallon / 1065 Imperial gallons.	$8,273
4010-0057	530 Gallon" L" shape Water Tank. Includes lowered rear section for lower hosebed height. Note: Any foam cell(s) optioned will reduce the overall water capacity. Tank capacity is 530 US gallon / 441 Imperial gallons.	$7,366
4010-0058	1030 Gallon "T" Water Tank. Includes lower upper "T" for lower hosebed height. Note: Any foam cell(s) optioned will reduce the overall water capacity.	$6,886
4010-0059	530 Gallon "T" Water Tank. Includes raised lower "T" and rear tank overhang for shallow upper area rear compartment. Note: Any foam cell(s) will reduce the overall water capacity.	$6,242
4010-0060	530 Gallon "T" Water Tank. Includes raised lower "T" and rear tank overhang for deep upper area rear compartment. Note: Any foam cell(s) will reduce the overall water capacity.	$6,617
4010-0061	530 Gallon "T" Water Tank. Includes lowered "T" and rear tank overhang for shallow upper area rear compartment. Note: Any foam cell(s) will reduce the overall water capacity.	$4,994
4010-0064	780 Gallon" L" shape Water Tank. Includes lowered rear section for lower hosebed height. Note: Any foam cell(s) optioned will reduce the overall water capacity. Tank capacity is 780 US gallon / 649 Imperial gallons.	$7,902
4010-0065	680 Gallon "T" Water Tank. Note: Any foam cell(s) and/or storage options thru the tank will reduce the overall water capacity.	$5,530
4010-0067	875 Gallon "R" Water Tank (Special add for Canada bid that has specific imperal capacity).	$6,651
4010-0068	510 Gallon "T" Water Tank. Note: Any foam cell(s) will reduce the overall water capacity.	$4,994
4010-0071	780 Gallon "R" Water Tank. Note: Any foam cell(s) and/or storage options thru the tank will reduce the overall water capacity. Tank capacity is 780 US gallon / 649 Imperial gallons.	$6,517
4010-0072	1030 Gallon" L" shape Water Tank. Includes lowered rear section for lower hosebed height. Note: Any foam cell(s) optioned will reduce the overall water capacity. Tank capacity is 1030 US gallon / 857 Imperial gallons.	$9,777
4010-0073	530 Imperial Gallon "R" Water Tank. Note: Any foam cell(s) and/or storage options thru the tank will reduce the overall water capacity.	$5,261
4010-0074	530 Gallon "T" Water Tank. Note: Any foam cell(s) will reduce the overall water capacity. Fill towers to be located side by side and offset rearward due to hosebed storage pan partition. Tank capacity is 530 US gallons / 441 Imperial gallons	$6,166
4010-0077	1250 Gallon "T" Water Tank. Note: Any foam cell(s) and/or storage options thru the tank will reduce the overall water capacity. Tank capacity is 1250 US gallons / 1040 Imperial gallons	$8,801
4010-0078	1250 Gallon "R" Water Tank. Note: Any foam cell(s) and/or storage options thru the tank will reduce the overall water capacity. Tank capacity is 1250 US gallons / 1040 Imperial gallons	$8,273
4010-0081	1030 Gallon "T" Water Tank. Note: Any foam cell(s) and/or storage options thru the tank will reduce the overall water capacity. Tank capacity is 1030 US gallons / 857 Imperial gallons. Includes raised lower forward area for T-Case positioning and tank sump moved rearward to clear T-Case.	$8,607
4010-0083	Fill tower locations. Water and Foam "A" fill towers to be located driver side of hosebed and Foam "B" fill tower to be located to officer side of hosebed.	$257
4015-0002	Mechanical Speed Counter for Hale Pumps	$278
4015-0007	Pump Cooler	$144
4015-0008	Zinc Anodes for Hale Pump - (Pair) (1) Discharge side and (1) Intake Side	$281
4015-0012	Pump Shift Override - side panel mounted	$647
4015-0013	Fire Research ThrottleXcel engine throttle. Includes engine gauges.	$1,383
4015-0014	Valve Relief Thermal - Hale TRV120	$723
4015-0015	Valve Relief System - TPM Hale	$3,239
4015-0016	Valve Relief Thermal - Hale TRVL-120	$1,310
4015-0018	Valve Inlet MIV-E - Hale. Location: [#LOC]	$2,998
4015-0019	Valve Inlet MIV-M -Hale. Location: [#LOC]	$2,572
4015-0020	Valve Monarch Manual - Waterous. Location: [#LOC]	$3,853
4015-0021	Valve Monarch Air Actuated - Waterous. Location: [#LOC]	$4,777
4015-0022	Pump Seal Mechanical - Hale	$661
4015-0026	Electronic Speed Counter for Waterous Pumps	$275
4015-0029	Hale Pressure Relief Valve	$1,134
4015-0030	Waterous Pressure Relief Valve	$1,269
4015-0031	Valve Relief System - Dual TPM Required for 2250gpm Pumps	$3,833
4015-0033	Hale 2-Stage Power Operated Transfer Valve	$1,503
4015-0035	Waterous 2-Stage Electronic Transfer Valve	$1,270
4015-0036	6" Additional Intake for 2250gpm Pump	$1,734
4015-0037	Engine Throttle Venier	$314

4015-0039	Pump Seal Mechanical for Waterous Pump	$621
4015-0041	Valve Monarch Electric - Waterous. Location: [#LOC]	$4,889
4015-0042	Waterous Overheat Protection Manager	$933
4015-0043	Anodes for Hale Cafspro Pump - (Pair) (1) Discharge side and (2) Intake Side	$422
4015-0044	Anodes for Waterous Pump - (Pair) (1) Discharge side and (1) Intake Side	$339
4015-0045	Throttle Selection Switch on Pump Operator's Panel for Backup Relief and Throttle System.	$478
4015-0046	Hale Pump Shift Override	$1,032
4015-0047	Additonal Hale Primer Valve Located: [#LOC]	$530
4015-0048	Pump Shift Override - driver's side under runningboard forward of runningboard tray if applicable.	$647
4015-0049	Extend Fire Pump Grease Zerks to Operator's Panel	$371
4015-0050	Relocate Primer to the Outside of the Frame Rail on Driver's Side	$81
4015-0051	Two 4.5" Steamers for Hale Qflo Pump	$660
4015-0054	Additonal Waterous Primer Located: [#LOC]	$1,189
4015-0056	Air operated master pump drain (upgrade).	$191
4015-0057	Special controls and regulator requirements for Seattle. Install RV-1 (Pressure Regulating Valve) going to pump shift to allow a max of 60 PSI on pump.	$360
4015-0058	Engine shut-down switch on pump panel. Includes coverered access.	$291
4015-0061	Ross 19 WR-D with trigger type handle, chromed, shall be provided with controls operated from the right hand pump panel. Finish in chrome plate. Testing for intake pressures shall be done at the factory so that a label can be applied to the adjustment providing accurate settings in 25 pound increments from 75 to 275 pounds of intake pressure.	$2,274
4015-0062	Primer indicator light shall be provided on the pump operator's panel, color to be red.	$100
4015-0063	TPM Relief Valve outlet to be extended to the side of truck under runningboard	$248
4015-0064	Hale Auto Fill/Thief Inlet 2.5" Tank Fill "AutoFill" Automatic Tank Fill Valve Location: [#LOC].	$3,818
4015-0065	Schedule 40 Stainless steel piping	$1,054
4015-0066	Trident Pump Primer W/3 Barrel Push Botton Control.	$943
4015-0069	MIV's, Pressure Relief and Atmospheric Relief (intake relief) to be plumbed to top of heat pan.	$134
4015-0070	WATEROUS OIL PRIMER	$62
4015-0071	Valve Relief Thermal - Hale TRVL-120 W/Audible Alarm	$1,323
4015-0074	Manual remote operated master pump drain. The master drain control shall be clearly marked and placed in accessible location on driver side pump panel.	$283
4015-0080	6" Cap Vented "IPOS"	$13
4015-0081	Hale Semi-Automatic Priming push-button control.	$440
4015-0082	Electric Over Air Actaution Pump Cooler Valve	$382
4015-0083	Electric Over Air Actaution Engine Cooler Valve	$245
4015-0084	Pump Air Blow Out with 1/4 Snubber Vavlve.	$219
4015-0085	Auto Tank to Pump Operation. When Switched to Automatic Mode, The Tank Valve will Close When Suction Pressure Reaches 15 PSI & Opens When Suction PressureI Drops Below 15 PSI.	$1,621
4015-0086	Pump Cooler 1/4 Turn Valve	$229
4015-0087	Engine Cooler 1/4 Turn Valve	$229
4015-0088	Portable/Qmax Pump Shall be with Manifold and check valves for Front Bumper Turret and Ground Sweep. To be use dearing Pump&Roll operation.	$791
4015-0090	Akron Test Port for Master Gauges	$83
4015-0091	Pump Cooler with .75 1/4 turn valve.	$259
4015-0092	Hale Fill Thieft Steamers to be Flush + 2 Location [#LOC]	$1,400
4020-0001	Additional Tank Sump	$278
4020-0002	Dump Valve Mounting Plate	$512
4020-0003	Jet Dump	$512
4020-0004	Newton Dump Mounting Plate	$487
4020-0006	Direct 1.0" Water Tank Fill with Akron Valve Terminate with .75 Hose Bib. Location: driver side pump panel	$701
4020-0007	1.5" Tank Drain Akron Manual Valve with pull cable control at left pump panel. Valve shall be located at the tank sump and extend plumbing below frame rail.	$736
4020-0008	Water Overflow Pipe to be cut down an additional 3".	$133
4020-0009	Water fill tower to have a butterfly latch.	$160
4020-0011	Notch officer side water tank (overall tank capacity will be reduced for application). Notch to allow 2.5" rear diacharge to be routed down low to rear of unit. Discharge to be positioned towards lower area of ladder tunnel access door (height only).	$1,347
4100-0000	10 gallon integral foam tank for [#LOC]. Foam tank capacity will reduce the water tank capacity.	$844
4100-0006	40 gallon integral foam tank for [#LOC]. Foam tank capacity will reduce the water tank capacity.	$1,072
4100-0007	15 gallon integral foam tank for [#LOC]. Foam tank capacity will reduce the water tank capacity.	$877
4100-0008	20 gallon integral foam tank for [#LOC]. Foam tank capacity will reduce the water tank capacity.	$907
4100-0009	30 gallon integral foam tank for [#LOC]. Foam tank capacity will reduce the water tank capacity. Tank capacity is 30 US gallon / 25 Imperial gallons.	$983
4100-0012	280 gallon integral foam tank for [#LOC]. Foam tank capacity will reduce the water tank capacity.	$3,704
4100-0013	50 gallon integral foam tank for [#LOC]. Foam tank capacity will reduce the water tank capacity. Tank capacity is 50 US gallon / 41 Imperial gallons.	$1,150
4100-0014	150 gallon integral foam tank for [#LOC]. Foam tank capacity will reduce the water tank capacity.	$2,968
4100-0015	25 gallon integral foam tank for [#LOC]. Foam tank capacity will reduce the water tank capacity.	$945
4100-0016	100 gallon integral foam tank for [#LOC]. Foam tank capacity will reduce the water tank capacity.	$2,138
4100-0017	10 gallon external foam tank. Locate in storage pan. Tower to be next to water fill tower.	$1,340
4100-0018	80 gallon integral foam tank for [#LOC]. Foam tank capacity will reduce the water tank capacity.	$1,710
4100-0020	60 gallon integral foam tank for [#LOC]. Foam tank capacity will reduce the water tank capacity.	$1,378
4100-0021	30 imperial gallon integral foam tank for [#LOC]. Foam tank capacity will reduce the water tank capacity.	$1,072
4100-0022	180 gallon integral foam tank for [#LOC]. Foam tank capacity will reduce the water tank capacity.	$3,466
4100-0023	300 gallon integral foam tank for class [#LOC] foam. Foam tank capacity will reduce the water tank capacity.	$3,506

4110-0002	Foam Tank Outlet Location: [#LOC]	$835
4405-0017	Booster Reel. Reel to have capacity of 200' of 1" (not included). Includes (reel side) stirrup style rewind switch. Locate [#LOC].	$2,373
4405-0021	Booster reel - front bumper. Center between frame rails. Will hold 100' of 1" or 150' of 3/4" booster hose.	$5,505
4405-0036	Booster Reel. Reel to have capacity of 200' of 1" (not included). Includes rewind switch on wall adjacent to reel. Locate rear upper body compartment.	$2,555
4405-0041	Booster Reel. Reel to have capacity of 200' of 1.5" (not included). Locate [#LOC].	$2,532
4405-0045	Booster Reel. Reel to have capacity of 200' of 1" (not included). Locate [#LOC].	$2,373
4405-0046	Booster Reel. Reel to have capacity of 100' of 1" (not included). Includes rewind switch located on bottom of adjustable shelf on far right side corner. Locate rear body compartment offset to officer side as far as possible.	$2,359
4405-0047	Drop down booster reel mounted roller assembly. For use with rear compartment mounted booster reel.	$315
4405-0055	Booster Reel. Reel to have capacity of 150' of 1" (not included). Locate [#LOC]. Includes body/beavertail mounted rewind switch located to outboard side of reel location.	$2,373
4405-0060	Booster reel Akron Elect valve with a 9315 controller to read pressure only- Behind Front of Cab. Center between frame rails. To hold 100' of 1"	$5,695
4405-0061	Akron Booster reel - front bumper. Center between frame rails. Will hold 150' of 1" or 250' of 3/4" booster hose.	$5,885
4415-0008	1.5" Front Bumper Discharge Akron Manual Valve	$1,375
4415-0009	1.5" Front Bumper Discharge Hale Manual Valve	$1,466
4415-0010	1.5" Front Bumper Discharge Akron Electric Valve	$2,836
4415-0011	2.5" Front Bumper Discharge Akron Electric Valve	$2,975
4415-0012	1.5" Crosslay with Akron Manual Valve; Location: [#LOC]	$855
4415-0014	2.5" Left Pump Panel Discharge Akron Manual Valve. Location: [#LOC]	$890
4415-0015	2.5" Left Panel Discharge Hale Manual Valve. Location: [#LOC]	$1,159
4415-0016	2.5" Right Pump Panel Discharge Akron Manual Valve. Location: [#LOC]	$990
4415-0017	2.5" Right Pump Panel Discharge Hale Manual Valve. Location: [#LOC]	$1,257
4415-0018	2.5" Left Front Hosebed Discharge Akron Manual Valve	$1,287
4415-0019	2.5" Left Front Hosebed Discharge Hale Manual Valve	$1,505
4415-0020	2.5" Right Front Hosebed Discharge Akron Manual Valve	$1,287
4415-0021	2.5" Right Front Hosebed Discharge Hale Manual Valve	$1,505
4415-0022	2.5" Left Rear Discharge Akron Manual Valve Location: [#LOC]	$1,041
4415-0023	2.5" Left Rear Discharge Hale Manual Valve Location: [#LOC]	$1,257
4415-0028	2.5" Right Rear Discharge Akron Manual Valve Location: [#LOC]	$1,041
4415-0029	2.5" Right Rear Discharge Hale Manual Valve Location: [#LOC]	$1,257
4415-0033	3" Left Pump Panel Top mount Discharge Akron Manual Valve Location: [#LOC]	$1,525
4415-0034	3" Right Pump Panel Discharge Akron Manual Valve Location: [#LOC]	$1,431
4415-0035	3" Right Pump Panel Discharge Hale Manual Valve Location: [#LOC]	$1,756
4415-0036	3" Left Front Hosebed Discharge Akron Manual Valve	$1,871
4415-0037	3" Right Front Hosebed Discharge Akron Manual Valve	$1,871
4415-0038	3" Left Rear Discharge Akron Manual Valve Location: [#LOC]	$1,609
4415-0039	3" Right Rear Discharge Akron Manual Valve Location: [#LOC]	$1,609
4415-0041	3" Deck Gun Discharge Akron Manual Valve	$1,460
4415-0049	4" Pump Panel Discharge Hale Electric Valve Location: [#LOC]	$5,049
4415-0050	4" Pump Panel Discharge Akron Electric Valve (Waterous pumps noted location to be forward lower port). [#LOC]	$4,092
4415-0054	4" Right Pump Panel Discharge with 3" Akron Manual Valve Location: [#LOC]	$1,683
4415-0055	4" Left Rear Discharge Akron Electric Valve	$4,336
4415-0057	5" Right Pump Panel Discharge with 3" Akron Manual Valve Location: [#LOC]	$2,335
4415-0058	2.5" Crosslay Akron Manual Valve. To be located rearward of 1.5" crosslay(s) if applicable. Location: [#LOC]	$1,031
4415-0063	1.5" Double Speedlay with Hale Manual Valve for ERV	$2,012
4415-0064	1.5" Double Speedlay with Akron Manual Valve for ERV	$2,012
4415-0065	1.5" Double Speedlay with Akron Manual Valves	$1,676
4415-0066	1.5" Triple Speedlay with Akron Manual Valve	$2,632
4415-0067	1.5" Left Front Hosebed Preconnect Akron Manual Valve	$890
4415-0068	1.5" Right Front Hosebed Preconnect Akron Manual Valve	$890
4415-0071	1.5" Left Rear Discharge Akron Manual Valve Location: [#LOC]	$940
4415-0072	1.5" Right Rear Discharge Akron Manual Valve Location: [#LOC]	$940
4415-0073	Triple Speedlay (2) 1.5" and (1) 2.5" with Akron Manual Valve	$3,756
4415-0085	1.5" Crosslay w/2" Akron Electric Valve Location: [#LOC]	$2,495
4415-0086	2.5" Crosslay w/Akron Electric Valve. To be located rearward of 1.5" crosslay(s) if applicable. Location: [#LOC]	$2,868
4415-0088	1.5" Crosslay w/2" Akron Electric Valve & Navigator 9305 Location: [#LOC]	$4,669
4415-0089	2.5" Crosslay w/Akron Electric Valve & Navigator 9305. To be located rearward of 1.5" crosslay(s) if applicable. Location: [#LOC]	$5,424
4415-0093	Double 1.5" Speedlay w/2" Akron Electric Valves	$5,001
4415-0094	Triple 1.5" Speedlay w/2" Akron Electric Valves	$7,614
4415-0095	Triple (2) 1.5" & (1) 2.5" Speedlay w/(2) 2" & (1) 2.5" Akron Electric Valves	$9,177
4415-0096	Double 1.5" Speedlay w/2" Akron Electric Valves & Navigator 9305	$9,272
4415-0097	Triple 1.5" Speedlay w/2" Akron Electric Valves & Navigator 9305	$14,044
4415-0098	Triple (2) 1.5" & (1) 2.5" Speedlays w/(2) 2" & (1) 2.5" Akron Electric Valves & Navigator 9305	$15,937
4415-0099	3" Deck Gun Discharge Akron Electric Valve	$3,363
4415-0100	3" Deck Gun Discharge Akron Electric Valve & Navigator 9305	$5,986
4415-0102	1.5" Front Bumper Discharge Akron Electric Valve & Navigator 9305	$5,210
4415-0104	2.5" Front Bumper Discharge Akron Electric Valve & Navigator 9305	$6,049
4415-0106	1.5" Left Front Hosebed w/2" Akron Electric Valve	$2,551
4415-0107	2.5" Left Front Hosebed Akron Electric Valve	$3,128
4415-0108	3" Left Front Hosebed Akron Electric Valve	$3,775

4415-0110	2.5" Left Front Hosebed Akron Electric Valve & Navigator 9305	$5,755
4415-0111	3" Left Front Hosebed Akron Electric Valve & Navigator 9305	$6,397
4415-0115	1.5" Right Front Hosebed w/2" Akron Electric Valve	$2,551
4415-0116	2.5" Right Front Hosebed Akron Electric Valve	$3,128
4415-0117	3" Right Front Hosebed Akron Electric Valve	$3,775
4415-0118	1.5" Right Front Hosebed w/2" Akron Electric Valve & Navigator 9305	$4,725
4415-0119	2.5" Right Front Hosebed Akron Electric Valve & Navigator 9305	$5,755
4415-0120	3" Right Front Hosebed Akron Electric Valve & Navigator 9305	$6,397
4415-0124	2.5" Left Pump Panel Discharge Akron Electric Valve. Location: [#LOC]	$2,730
4415-0125	2.5" Left Pump Panel Discharge Akron Electric Valve & Navigator 9305. Location: [#LOC]	$5,359
4415-0127	2.5" Right Pump Panel Discharge Akron Electric Valve Location: [#LOC]	$2,730
4415-0128	3" Right Pump Panel Discharge Akron Electric Valve Location: [#LOC]	$3,337
4415-0129	4" Right Pump Panel Discharge w/3" Akron Electric Valve Location: [#LOC]	$3,589
4415-0130	5" Right Pump Panel Discharge w/3" Akron Electric Valve Location: [#LOC]	$4,239
4415-0131	2.5" Right Pump Panel Discharge Akron Electric Valve & Navigator 9305 Location: [#LOC]	$5,359
4415-0132	3" Right Pump Panel Discharge Akron Electric Valve & Navigator 9305 Location: [#LOC]	$5,956
4415-0133	4" Pump Panel Discharge Akron Electric Valve & Navigator 9305 Location: [#LOC]	$7,227
4415-0134	4" Right Pump Panel Discharge w/3" Akron Electric Valve & Navigator 9305 Location: [#LOC]	$6,209
4415-0135	5" Right Pump Panel Discharge w/3" Akron Electric Valve & Navigator 9305 Location: [#LOC]	$6,861
4415-0140	1.5" Left Rear Discharge Akron Electric Valve Location: [#LOC]	$2,601
4415-0141	2.5" Left Rear Discharge Akron Electric Valve Location: [#LOC]	$2,882
4415-0142	3" Left Rear Discharge Akron Electric Valve Location: [#LOC]	$3,514
4415-0143	1.5" Left Rear Discharge Akron Electric Valve & Navigator 9305 Location: [#LOC]	$4,777
4415-0144	2.5" Left Rear Discharge Akron Electric Valve & Navigator 9305 Location: [#LOC]	$5,509
4415-0145	3" Left Rear Discharge Akron Electric Valve & Navigator 9305 Location: [#LOC]	$6,134
4415-0149	1.5" Right Rear Discharge Akron Electric Valve Location: [#LOC]	$2,601
4415-0150	2.5" Right Rear Discharge Akron Electric Valve Location: [#LOC]	$2,882
4415-0151	3" Right Rear Dicharge Akron Electric Valve Location: [#LOC]	$3,514
4415-0152	1.5" Right Rear Discharge Akron Electric Valve & Navigator 9305 Location: [#LOC]	$4,777
4415-0153	2.5" Right Rear Discharge Akron Electric Valve & Navigator 9305 Location: [#LOC]	$5,509
4415-0154	3" Right Rear Discharge Akron Electric Valve & Navigator 9305 Location: [#LOC]	$6,134
4415-0158	3" Left Panel Discharge Top Mount Akron Manual Valve w/30 Degree Droop Location: [#LOC]	$1,804
4415-0159	3" Left Panel Discharge Top Mount Akron Electric Valve Location: [#LOC]	$3,430
4415-0160	3" Left Panel Discharge Top Mount Akron Electric Valve w/30 Degree Droop Location: [#LOC]	$3,709
4415-0161	2.5" Left Panel Discharge Akron Manual Valve w/30 Degree Droop Location: [#LOC]	$1,119
4415-0162	2.5" Left Panel Discharge Akron Electric Valve w/30 Degree Droop Location: [#LOC]	$2,961
4415-0163	2.5" Left Panel Dishcarge Akron Electric Valve & Navigator 9305 w/30 Degree Droop Location: [#LOC]	$5,589
4415-0164	2.5" Right Panel Discharge Akron Manual Valve w/30 Degree Droop Location: [#LOC]	$1,119
4415-0165	3" Right Panel Discharge Akron Manual Valve w/30 Degree Droop Location: [#LOC]	$1,710
4415-0166	2.5" Right Panel Discharge Akron Electric Valve w/30 Degree Droop Location: [#LOC]	$2,961
4415-0167	3" Right Panel Discharge Akron Electric Valve w/30 Degree Droop Location: [#LOC]	$3,614
4415-0168	2.5" Right Panel Discharge Akron Electric Valve & Navigator 9305 w/30 Degree Droop Location: [#LOC]	$5,589
4415-0169	3" Right Panel Discharge Akron Electric Valve & Navigator 9305 w/30 Degree Droop Location: [#LOC]	$6,236
4415-0179	2.5" Auxiliary Deck Gun Discharge Akron Valve for use with CAFS System	$1,735
4415-0184	3" Deck Gun Discharge Hale Manual Valve	$1,639
4415-0185	3" Left Panel Discharge w/Akron Electric Valve & 9305 Navigator for Top Mount Module Location: [#LOC]	$6,052
4415-0186	3" Left Panel Discharge w/Akron Electric Valve & 9305 Navigator for Top Mount Module Location: [#LOC]	$6,330
4415-0187	1.5" Crosslay with Hale Manual Valve Location: [#LOC]	$1,647
4415-0189	2.5" Crosslay with Hale Manual Valve Location: [#LOC]	$2,222
4415-0190	Double 1.5" Speedlay with Hale Manual Valve	$2,065
4415-0191	Triple 1.5" Speedlay with Hale Manual Valve	$3,214
4415-0193	Triple Speedlay (2) 1.5" and (1) 2.5" with Hale Manual Valves	$4,597
4415-0194	2.5" Front Bumper Discharge Akron Manual Valve	$1,579
4415-0195	4" Right Pump Panel Discharge with 3" Hale Manual Valve Location: [#LOC]	$2,010
4415-0196	5" Right Pump Panel Discharge with 3" Hale Manual Valve Location: [#LOC]	$2,663
4415-0197	2.5" Left Panel Discharge Hale Manual Valve with Droop. Location: [#LOC]	$1,386
4415-0198	2.5" Right Pump Panel Discharge Hale Manual Valve with droop. Location: [#LOC]	$1,483
4415-0199	3" Right Pump Panel Discharge Hale Manual Valve with Droop Location: [#LOC]	$2,029
4415-0200	1.5" Left Panel Discharge Akron Valve	$890
4415-0201	1.5" Right Panel Discharge Akron Valve	$890
4415-0204	1.5" Crosslay with Hale Electric Valve Location: [#LOC]	$2,972
4415-0205	2.5" Crosslay with Hale Electric Valve Location: [#LOC]	$3,664
4415-0206	Double 1.5" Speedlay with Hale Electric Valve	$4,712
4415-0207	Triple 1.5" Speedlay with Hale Electric Valve	$7,184
4415-0208	Triple Speedlay (2) 1.5" and (1) 2.5" with Hale Electric Valves	$8,684
4415-0209	3" Deck Gun Discharge Hale Electric Valve	$3,620
4415-0210	2.5" Auxiliary Deck Gun Discharge Hale Valve for use with CAFS System	$3,715
4415-0211	2.5" Front Bumper Discharge Hale Manual Valve	$1,627
4415-0212	1.5" Front Bumper Discharge Hale Electric Valve	$2,790
4415-0213	2.5" Front Bumper Discharge Hale Electric Valve	$3,069
4415-0214	1.5" Left Front Hosebed Discharge Hale Manual Valve	$1,017
4415-0215	3" Left Front Hosebed Discharge Hale Manual Valve	$2,050
4415-0216	1.5" Left Front Hosebed Discharge Hale Electric Valve	$2,341
4415-0217	2.5" Left Front Hosebed Discharge Hale Electric Valve	$2,946
4415-0218	3" Left Front Hosebed Discharge Hale Electricl Valve	$4,030

4415-0219	1.5" Right Front Hosebed Discharge Hale Manual Valve	$1,017
4415-0220	3" Right Front Hosebed Discharge Hale Manual Valve	$2,050
4415-0221	1.5" Right Front Hosebed Discharge Hale Electric Valve	$2,341
4415-0222	2.5" Right Front Hosebed Discharge Hale Electric Valve	$2,946
4415-0223	3" Right Front Hosebed Discharge Hale Electric Valve	$4,030
4415-0224	1.5" Left Panel Discharge Hale Valve	$981
4415-0225	3" Left Pump Panel Top mount Discharge Hale Manual Valve Location: [#LOC]	$1,704
4415-0226	3" Left Pump Panel Top mount Discharge with 30 deg Droop Hale Manual Valve Location: [#LOC]	$1,977
4415-0227	2.5" Left Panel Discharge Hale Electric Valve. Location: [#LOC]	$2,600
4415-0228	2.5" Left Panel Discharge Hale Electric Valve with Droop. Location: [#LOC]	$2,827
4415-0229	3" Left Pump Panel Top mount Discharge Hale Electric Valve Location: [#LOC]	$3,684
4415-0230	3" Left Pump Panel Top mount Discharge with 30 deg Droop Hale Electric Valve Location: [#LOC]	$3,958
4415-0231	1.5" Right Panel Discharge Hale Valve	$981
4415-0232	2.5" Right Pump Panel Discharge Hale Electric Valve. Location: [#LOC]	$2,699
4415-0233	2.5" Right Pump Panel Discharge Hale Electric Valve with droop. Location: [#LOC]	$2,925
4415-0234	3" Right Pump Panel Discharge Hale Electric Valve Location: [#LOC]	$3,737
4415-0235	3" Right Pump Panel Discharge Hale Electric Valve with Droop Location: [#LOC]	$4,009
4415-0236	4" Right Pump Panel Discharge with 3" Hale Electric Valve Location: [#LOC]	$3,990
4415-0237	5" Right Pump Panel Discharge with 3" Hale Electric Valve Location: [#LOC]	$4,643
4415-0238	1.5" Left Rear Discharge Hale Manual Valve Location: [#LOC]	$1,033
4415-0239	3" Left Rear Discharge Hale Manual Valve Location: [#LOC]	$1,788
4415-0240	1.5" Left Rear Discharge Hale Electric Valve Location: [#LOC]	$2,357
4415-0241	2.5" Left Rear Discharge Hale Electric Valve Location: [#LOC]	$2,699
4415-0242	3" Left Rear Discharge Hale Electric Valve Location: [#LOC]	$3,769
4415-0243	1.5" Right Rear Discharge Hale Manual Valve Location: [#LOC]	$1,033
4415-0244	3" Right Rear Discharge Hale Manual Valve Location: [#LOC]	$1,788
4415-0245	1.5" Right Rear Discharge Hale Electric Valve Location: [#LOC]	$2,357
4415-0246	2.5" Right Rear Discharge Hale Electric Valve Location: [#LOC]	$2,699
4415-0247	3" Right Rear Discharge Hale Electric Valve Location: [#LOC]	$3,769
4415-0248	1.5" Crosslay Elkhart Manual Valve Location: [#LOC]	$903
4415-0249	2.5" Crosslay Elkhart Manual Valve. To be located rearward of 1.5" crosslay(s) if applicable. Location: [#LOC]	$1,162
4415-0250	1.5" Crosslay w/2" Elkhart Electric Valve Location: [#LOC]	$1,999
4415-0251	2.5" Crosslay w/Elkhart Electric Valve. To be located rearward of 1.5" crosslay(s) if applicable. Location: [#LOC]	$2,442
4415-0252	1.5" Double Speedlay with Elkhart Manual Valves	$1,815
4415-0253	SPDLY TRPL 1.5" ELKHART VLV	$2,841
4415-0254	Triple Speedlay (2) 1.5" and (1) 2.5" with Elkhart Manual Valves	$4,285
4415-0255	Double 1.5" Speedlay w/2" Elkhart Electric Valves	$4,004
4415-0256	Triple 1.5" Speedlay w/2" Elkhart Electric Valves	$6,125
4415-0257	Triple (2) 1.5" & (1) 2.5" Speedlay w/(2) 2" & (1) 2.5" Elkhart Electric Valves	$7,754
4415-0265	3" Deck Gun Discharge Elkhart Manual Valve w/RC-10 Controler	$1,653
4415-0266	3" Deck Gun Discharge Elkhart Electric Valve	$2,910
4415-0267	2.5" Auxiliary Deck Gun Discharge Elkhart Valve for use with CAFS System	$1,867
4415-0268	1.5" Front Bumper Discharge Elkhart Manual Valve	$1,445
4415-0269	2.5" Front Bumper Discharge Elkhart Manual Valve	$1,711
4415-0270	1.5" Front Bumper Discharge Elkhart Electric Valve	$2,539
4415-0271	2.5" Front Bumper Discharge Elkhart Electric Valve	$2,993
4415-0272	1.5" Left Front Hosebed Preconnect Elkhart Manual Valve	$960
4415-0273	2.5" Left Front Hosebed Discharge Elkhart Manual Valve	$1,418
4415-0274	3" Left Front Hosebed Discharge Elkhart Manual Valve	$2,064
4415-0275	1.5" Left Front Hosebed w/2" Elkhart Electric Valve	$2,055
4415-0276	2.5" Left Front Hosebed Elkhart Electric Valve	$2,699
4415-0277	3" Left Front Hosebed Elkhart Electric Valve	$3,321
4415-0278	1.5" Right Front Hosebed Preconnect Elkhart Manual Valve	$960
4415-0279	2.5" Right Front Hosebed Discharge Elkhart Manual Valve	$1,418
4415-0280	3" Right Front Hosebed Discharge Elkhart Manual Valve	$2,064
4415-0281	1.5" Right Front Hosebed w/2" Elkhart Electric Valve	$2,055
4415-0282	2.5" Right Front Hosebed Elkhart Electric Valve	$2,699
4415-0283	3" Right Front Hosebed Elkhart Electric Valve	$3,321
4415-0284	1.5" Left Panel Discharge Elkhart Valve	$960
4415-0285	4" Pump Panel Discharge Elkhart Electric Valve Location: [#LOC]	$4,269
4415-0286	5" Pump Panel Discharge with 4" Akron Electric Valve Location: [#LOC]	$4,665
4415-0287	5" Pump Panel Discharge with 4" Hale Electric Valve Location: [#LOC]	$5,589
4415-0288	5" Pump Panel Discharge with 4" Elkhart Electric Valve Location: [#LOC]	$4,842
4415-0289	2.5" Left Pump Panel Discharge Elkhart Manual Valve. Location: [#LOC]	$1,022
4415-0290	2.5" Left Panel Discharge Elkhart Manual Valve w/45 Degree Droop Location: [#LOC]	$1,251
4415-0291	3" Left Pump Panel Top mount Discharge Elkhart Manual Valve Location: [#LOC]	$1,718
4415-0292	2.5" Left Pump Panel Discharge Elkhart Electric Valve. Location: [#LOC]	$2,303
4415-0293	2.5" Left Panel Discharge Elkhart Electric Valve w/45 Degree Droop Location: [#LOC]	$2,532
4415-0294	3" Left Panel Discharge Top Mount Elkhart Electric Valve Location: [#LOC]	$2,976
4415-0295	4" Left Pump Panel Discharge with 3" Akron Manual Valve Top Mount Controlled Location: [#LOC]	$1,683
4415-0296	4" Left Pump Panel Discharge with 3" Hale Manual Valve Top Mount Controlled Location: [#LOC]	$2,009
4415-0297	4" Left Pump Panel Discharge with 3" Elkhart Manual Valve Top Mount Controlled Location: [#LOC]	$1,876
4415-0298	1.5" Right Panel Discharge Elkhart Valve	$960
4415-0299	2.5" Right Pump Panel Discharge Elkhart Manual Valve. Location: [#LOC]	$1,119

4415-0300	2.5" Right Panel Discharge Elkhart Manual Valve w/45 Degree Droop Location: [#LOC]	$1,251
4415-0301	3" Right Pump Panel Discharge Elkhart Manual Valve Location: [#LOC]	$1,625
4415-0302	4" Right Pump Panel Discharge with 3" Elkhart Manual Valve w/RC-10 Control w/lights Location: [#LOC]	$1,876
4415-0303	5" Right Pump Panel Discharge with 3" Elkhart Manual Valve Location: [#LOC]	$2,527
4415-0304	2.5" Right Pump Panel Discharge Elkhart Electric Valve Location: [#LOC]	$2,401
4415-0305	2.5" Right Panel Discharge Elkhart Electric Valve w/45 Degree Droop Location: [#LOC]	$2,532
4415-0306	3" Right Pump Panel Discharge Elkhart Electric Valve Location: [#LOC]	$2,883
4415-0307	4" Right Pump Panel Discharge w/3" Elkhart Electric Valve Location: [#LOC]	$3,136
4415-0308	5" Right Pump Panel Discharge w/3" Elkhart Electric Valve Location: [#LOC]	$3,786
4415-0309	1.5" Left Rear Discharge Elkhart Manual Valve Location: [#LOC]	$1,009
4415-0310	2.5" Left Rear Discharge Elkhart Manual Valve Location: [#LOC]	$1,172
4415-0311	3" Left Rear Discharge Elkhart Manual Valve Location: [#LOC]	$1,802
4415-0312	1.5" Left Rear Discharge Elkhart Electric Valve Location: [#LOC]	$2,104
4415-0313	2.5" Left Rear Discharge Elkhart Electric Valve Location: [#LOC]	$2,452
4415-0314	3" Left Rear Discharge Elkhart Electric Valve Location: [#LOC]	$3,060
4415-0315	1.5" Right Rear Discharge Elkhart Manual Valve Location: [#LOC]	$1,009
4415-0316	2.5" Right Rear Discharge Elkhart Manual Valve Location: [#LOC]	$1,172
4415-0317	3" Right Rear Discharge Elkhart Manual Valve Location: [#LOC]	$1,802
4415-0318	1.5" Right Rear Discharge Elkhart Electric Valve Location: [#LOC]	$2,104
4415-0319	2.5" Right Rear Discharge Elkhart Electric Valve Location: [#LOC]	$2,452
4415-0320	3" Right Rear Dicharge Elkhart Electric Valve Location: [#LOC]	$3,060
4415-0322	Second Left Front Hosebed Discharge 1.5" w/2" Akron Manual Valve	$890
4415-0323	Second Left Front Hosebed Discharge 2.5" Akron Manual Valve	$1,287
4415-0324	Second Left Front Hosebed Discharge 2.5" Hale Manual Valve	$1,505
4415-0325	Second Left Front Hosebed Discharge 3" Akron Manual Valve	$1,871
4415-0326	Second Left Front Hosebed 1.5" w/2" Akron Electric Valve	$2,551
4415-0327	Second Left Front Hosebed 2.5" Akron Electric Valve	$3,128
4415-0328	Second Left Front Hosebed 3" Akron Electric Valve	$3,775
4415-0329	Second Left Front Hosebed 1.5" w/2" Akron Electric Valve & Navigator 9305	$4,725
4415-0330	Second Left Front Hosebed 2.5" Akron Electric Valve & Navigator 9305	$5,755
4415-0331	Second Left Front Hosebed 3" Akron Electric Valve & Navigator 9305	$6,397
4415-0335	Second Left Front Hosebed Discharge 1.5" Hale Manual Valve	$1,017
4415-0336	Second Left Front Hosebed Discharge 3" Hale Manual Valve	$2,050
4415-0337	Second Left Front Hosebed Discharge 1.5" Hale Electric Valve	$2,341
4415-0338	Second Left Front Hosebed Discharge 2.5" Hale Electric Valve	$2,946
4415-0339	Second Left Front Hosebed Discharge 3" Hale Electricl Valve	$4,030
4415-0340	Second Left Front Hosebed Preconnect 1.5" Elkhart Manual Valve	$960
4415-0341	Second Left Front Hosebed Discharge 2.5" Elkhart Manual Valve	$1,418
4415-0342	Second Left Front Hosebed Discharge 3" Elkhart Manual Valve	$2,064
4415-0343	Second Left Front Hosebed 1.5" w/2" Elkhart Electric Valve	$2,055
4415-0344	Second Left Front Hosebed 2.5" Elkhart Electric Valve	$2,699
4415-0345	Second Left Front Hosebed 3" Elkhart Electric Valve	$3,321
4415-0346	Second Right Front Hosebed Preconnect 1.5" With 2" Akron Manual Valve	$890
4415-0347	Second Right Front Hosebed Discharge 2.5" Akron Manual Valve	$1,287
4415-0348	Second Right Front Hosebed Discharge 2.5" Hale Manual Valve	$1,505
4415-0349	Second Right Front Hosebed Discharge 3" Akron Manual Valve	$1,871
4415-0350	Second Right Front Hosebed 1.5" w/2" Akron Electric Valve	$2,551
4415-0351	Second Right Front Hosebed 2.5" Akron Electric Valve	$3,128
4415-0352	Second Right Front Hosebed 3" Akron Electric Valve	$3,775
4415-0353	Second Right Front Hosebed 1.5" w/2" Akron Electric Valve & Navigator 9305	$4,725
4415-0354	Second Right Front Hosebed 2.5" Akron Electric Valve & Navigator 9305	$5,755
4415-0355	Second Right Front Hosebed 3" Akron Electric Valve & Navigator 9305	$6,397
4415-0359	Second Right Front Hosebed 1.5" Discharge Hale Manual Valve	$1,017
4415-0360	Second Right Front Hosebed Discharge 3" Hale Manual Valve	$2,050
4415-0361	Second Right Front Hosebed Discharge 1.5" w/2" Hale Electric Valve	$2,341
4415-0362	Second Right Front Hosebed Discharge 2.5" Hale Electric Valve	$2,946
4415-0363	Second Right Front Hosebed Discharge 3" Hale Electric Valve	$4,030
4415-0364	Second Right Front Hosebed Preconnect 1.5" Elkhart Manual Valve	$960
4415-0365	Second Right Front Hosebed Discharge 2.5" Elkhart Manual Valve	$1,418
4415-0366	Second Right Front Hosebed Discharge 3" Elkhart Unibody Manual Valve and shall terminate with a 3"FNPT X 2.5"MNST adapter.	$2,064
4415-0367	Second Right Front Hosebed 1.5" w/2" Elkhart Electric Valve	$2,055
4415-0368	Second Right Front Hosebed 2.5" Elkhart Electric Valve	$2,699
4415-0369	Second Right Front Hosebed 3" Elkhart Electric Valve	$3,321
4415-0370	Second 1.5" Front Bumper Discharge Akron Manual Valve	$1,375
4415-0371	Second 1.5" Front Bumper Discharge Hale Manual Valve	$1,466
4415-0372	Second 1.5" Front Bumper Discharge Akron Electric Valve	$2,836
4415-0373	Second 2.5" Front Bumper Discharge Akron Electric Valve	$2,975
4415-0374	Second 1.5" Front Bumper Discharge Akron Electric Valve & Navigator 9305	$5,210
4415-0376	Second 2.5" Front Bumper Discharge Akron Electric Valve & Navigator 9305	$6,049
4415-0378	Second 2.5" Front Bumper Discharge Akron Manual Valve	$1,579
4415-0379	Second 2.5" Front Bumper Discharge Hale Manual Valve	$1,627
4415-0380	Second 1.5" Front Bumper Discharge Hale Electric Valve	$2,790
4415-0381	Second 2.5" Front Bumper Discharge Hale Electric Valve	$3,069
4415-0382	Second 1.5" Front Bumper Discharge Elkhart Manual Valve	$1,445

4415-0383	Second 2.5" Front Bumper Discharge Elkhart Manual Valve	$1,711
4415-0384	Second 1.5" Front Bumper Discharge Elkhart Electric Valve	$2,539
4415-0385	Second 2.5" Front Bumper Discharge Elkhart Electric Valve	$2,993
4415-0386	4" Right Rear Discharge Akron Electric Valve	$4,551
4415-0387	4" Left Rear Discharge Hale Electric Valve	$5,234
4415-0388	4" Left Rear Discharge Elkhart Electric Valve	$4,510
4415-0389	4" Right Rear Discharge Hale Electric Valve	$5,447
4415-0390	4" Right Rear Discharge Elkhart Electric Valve	$4,724
4415-0391	4" Deck Gun Discharge Akron Electric Valve	$4,856
4415-0392	4" Deck Gun Discharge Hale Electric Valve	$5,752
4415-0393	4" Deck Gun Discharge Elkhart Electric Valve	$5,029
4415-0397	4" Officer side discharge. Foward of steamer and includes 30 degree droop, 4" Akron full flow valve with 4" driver side hand wheel control.	$3,366
4415-0399	1.5" Crosslay w/2" Akron Valve Handwheel Control Location: [#LOC]	$1,764
4415-0400	1.5" Crosslay w/2" Elkhart Valve Handwheel Control Location: [#LOC]	$1,809
4415-0401	2.5" Crosslay w/Akron Valve Handwheel Control. To be located rearward of 1.5" crosslay(s) if applicable. Location: [#LOC]	$1,939
4415-0402	2.5" Crosslay w/Elkhart Valve Handwheel Control. To be located rearward of 1.5" crosslay(s) if applicable. Location: [#LOC]	$1,983
4415-0403	3" Deck Gun Discharge Akron Valve Handwheel Control	$2,368
4415-0404	3" Deck Gun Discharge Elkhart Valve Handwheel Control	$2,413
4415-0405	1.5" Front Bumper Discharge Akron Valve Handwheel Control	$2,284
4415-0406	1.5" Front Bumper Discharge Elkhart Valve Handwheel Control	$2,328
4415-0407	2.5" Front Bumper Discharge Akron Valve Handwheel Control	$2,488
4415-0408	2.5" Front Bumper Discharge Elkhart Valve Handwheel Control	$2,533
4415-0409	1.5" Left Front Hosebed Preconnect AkronValve Handwheel Control	$1,799
4415-0410	1.5" Left Front Hosebed Preconnect Elkhart Valve Handwheel Control	$1,844
4415-0411	2.5" Left Front Hosebed Discharge Akron Valve Handwheel Control	$2,195
4415-0412	2.5" Left Front Hosebed Discharge Elkhart Valve Handwheel Control	$2,239
4415-0413	3" Left Front Hosebed Discharge Akron Valve Handwheel Control	$2,780
4415-0414	3" Left Front Hosebed Discharge Elkhart Valve Handwheel Control	$2,823
4415-0415	1.5" Right Front Hosebed Preconnect Akron Valve Handwheel Control	$1,799
4415-0416	1.5" Right Front Hosebed Preconnect Elkhart Valve Handwheel Control	$1,844
4415-0417	2.5" Right Front Hosebed Discharge Akron Valve Handwheel Control	$2,195
4415-0418	2.5" Right Front Hosebed Discharge Elkhart Valve Handwheel Control	$2,239
4415-0419	3" Right Front Hosebed Discharge Akron Valve Handwheel Control	$2,780
4415-0420	3" Right Front Hosebed Discharge Elkhart Valve Handwheel Control	$2,823
4415-0421	4" Pump Panel Discharge Akron Valve Handwheel Control. Location: [#LOC]	$3,422
4415-0422	4" Pump Panel Discharge Elkhart Valve Handwheel Control. Location [#LOC]	$3,490
4415-0423	5" Right Pump Panel Discharge with 4" Akron Valve Handwheel Control	$3,997
4415-0424	5" Right Pump Panel Discharge with 4" Elkhart Valve Handwheel Control	$4,063
4415-0425	2.5" Right Pump Panel Discharge Akron Valve Handwheel Control. Location: [#LOC]	$1,899
4415-0426	2.5" Right Pump Panel Discharge Elkhart Valve Handwheel Control. Location: [#LOC]	$1,942
4415-0427	2.5" Right Panel Discharge Akron Valve Handwheel Control w/30 Degree Droop Location: [#LOC]	$2,028
4415-0428	2.5" Right Panel Discharge Elkhart Valve Handwheel Control w/30 Degree Droop Location: [#LOC]	$2,073
4415-0429	3" Right Pump Panel Discharge Akron Valve Handwheel Control Location: [#LOC]	$2,340
4415-0430	3" Right Pump Panel Discharge Elkhart Valve Handwheel Control Location: [#LOC]	$2,384
4415-0431	3" Right Panel Discharge Akron Valve Handwheel Control w/Droop Location: [#LOC]	$2,619
4415-0432	4" Right Panel Dischargew/3" Akron Valve Handwheel Control Location: [#LOC]	$2,593
4415-0433	4" Right Panel Dischargew/3" Elkhart Valve Handwheel Control Location: [#LOC]	$2,637
4415-0434	5" Right Pump Panel Discharge with 3" Akron Valve Handwheel Control Location: [#LOC]	$3,243
4415-0435	5" Right Pump Panel Discharge with 3" Elkhart Valve Handwheel Control Location: [#LOC]	$3,288
4415-0436	1.5" Left Rear Discharge Akron Valve Handwheel Control Location: [#LOC]	$1,849
4415-0437	1.5" Left Rear Discharge Elkhart Valve Handwheel Control Location: [#LOC]	$1,891
4415-0438	2.5" Left Rear Discharge Akron Valve Handwheel Control Location: [#LOC]	$1,949
4415-0439	2.5" Left Rear Discharge Elkhart Valve Handwheel Control Location: [#LOC]	$1,993
4415-0440	3" Left Rear Discharge Akron Valve Handwheel Control Location: [#LOC]	$2,518
4415-0441	3" Left Rear Discharge Elkhart Valve Handwheel Control Location: [#LOC]	$2,562
4415-0442	4" Left Rear Discharge Akron Valve Handwheel Control	$3,668
4415-0443	1.5" Right Rear Discharge Akron Valve Handwheel Control Location: [#LOC]	$1,849
4415-0444	1.5" Right Rear Discharge Elkhart Valve Handwheel Control Location: [#LOC]	$1,891
4415-0445	2.5" Right Rear Discharge Akron Valve Handwheel Control Location: [#LOC]	$1,949
4415-0446	2.5" Right Rear Discharge Elkhart Valve Handwheel Control Location: [#LOC]	$1,993
4415-0447	3" Right Rear Discharge Akron Valve Handwheel Control Location: [#LOC]	$2,518
4415-0448	3" Right Rear Discharge Elkhart Valve Handwheel Control Location: [#LOC]	$2,562
4415-0449	4" Right Rear Discharge Akron Valve Handwheel Control	$3,883
4415-0455	Second 1.5" Front Bumper Discharge Akron Valve Handwheel Control	$2,284
4415-0456	Second 1.5" Front Bumper Discharge Elkhart Valve Handwheel Control	$2,328
4415-0457	Second 2.5" Front Bumper Discharge Akron Valve Handwheel Control	$2,488
4415-0458	Second 2.5" Front Bumper Discharge Elkhart Valve Handwheel Control	$2,533
4415-0459	Second Left Front Hosebed Discharge 1.5" w/2" Akron Valve Handwheel Control	$1,799
4415-0460	Second Left Front Hosebed Discharge 1.5" w/2" Elkhart Valve Handwheel Control	$1,844
4415-0461	Second Left Front Hosebed Discharge 2.5" Akron Valve Handwheel Control	$2,195
4415-0462	Second Left Front Hosebed Discharge 2.5" Elkhart Valve Handwheel Control	$2,239
4415-0463	Second Left Front Hosebed Discharge 3" Akron Valve Handwheel Control	$2,780

4415-0464	Second Left Front Hosebed Discharge 3" Elkhart Valve Handwheel Control	$2,823
4415-0465	Second Right Front Hosebed Preconnect 1.5" Akron Valve Handwheel Control	$1,799
4415-0466	Second Right Front Hosebed Preconnect 1.5" Elkhart Valve Handwheel Control	$1,844
4415-0467	Second Right Front Hosebed Discharge 2.5" Akron Valve Handwheel Control	$2,195
4415-0468	Second Right Front Hosebed Discharge 2.5" Elkhart Valve Handwheel Control	$2,239
4415-0469	Second Right Front Hosebed Discharge 3" Akron Valve Handwheel Control	$2,780
4415-0470	Second Right Front Hosebed Discharge 3" Elkhart Valve Handwheel Control	$2,823
4415-0471	1.5" Left Discharge Akron Valve in Runningboard Hose Tray, [#LOC].	$890
4415-0472	1.5" Left Discharge Hale Valve in Runningboard Hose Tray, [#LOC].	$981
4415-0473	1.5" Left Discharge Elkhart Valve in Runningboard Hose Tray, [#LOC].	$960
4415-0474	1.5" Right Discharge Akron Valve in Runningboard Hose Tray, [#LOC].	$890
4415-0475	1.5" Right Discharge Hale Valve in Runningboard Hose Tray, [#LOC].	$981
4415-0476	1.5" Right Discharge Elkhart Valve in Runningboard Hose Tray, [#LOC].	$960
4415-0477	4" Left Rear Discharge Elkhart Valve Handwheel Control	$3,735
4415-0478	4" Right Rear Discharge Elkhart Valve Handwheel Control	$3,950
4415-0484	2.5" Quad Speedlay with Akron Manual Valves.	$4,116
4415-0486	Third Left Front Hosebed Discharge 2.5" Akron Manual Valve.	$1,287
4415-0487	2.5" Discharge Package Montreal. Includes (8) discharges- (4) each side with droop.	$12,363
4415-0488	4" officer rear discharge with 3" valve. Includes 4" FNPT x 4" MNST chrome adaptor with cap (ship loose).	$2,800
4415-0491	2.5" Left Panel Discharge Elkhart Manual UnibodyValve w/30 Degree Droop Location: [#LOC]	$1,225
4415-0492	2.5" Right Panel Discharge Elkhart Manual UnibodyValve w/30 Degree Droop Location: [#LOC]	$1,246
4415-0493	1.5" Crosslay w/2" Elkhart Unibody Manual Valve Location: [#LOC]	$903
4415-0494	1.5" Crosslay w/2" Elkhart Unibody Electric Valve UBEC3 Location: [#LOC]	$4,395
4415-0495	2.5" Right Panel Discharge Elkhart Hand Wheel Control UnibodyValve w/45 Degree Droop Location: [#LOC]	$2,007
4415-0496	3" Deck Gun Discharge Elkhart Unibody Valve Handwheel Control	$2,328
4415-0497	4" Pump Panel Discharge Elkhart Electric UBEC3 Valve Location: [#LOC]	$5,735
4415-0498	1.5" Right Rear Discharge Elkhart Electric UBEC3 Valve Location: [#LOC]	$4,263
4415-0499	2.5" Right Rear Discharge Elkhart Electric UBEC3 Valve Location: [#LOC]	$4,953
4415-0500	1.5" Front Bumper Discharge Elkhart Electric UBEC3 Valve	$4,519
4415-0502	1.5" Front Bumper Discharge Akron Manual Valve without Blowout	$1,375
4415-0504	2.5" Right Panel Discharge Elkhart Manual UnibodyValve Location: [#LOC]	$1,142
4415-0505	2.5" Left Panel Discharge Elkhart Manual UnibodyValve Location: [#LOC]	$1,118
4415-0506	2.5" Right Panel Discharge Elkhart Hand Wheel Control UnibodyValve Location: [#LOC]	$1,903
4415-0507	4" Officer side discharge. Foward of steamer and includes 30 degree droop. Hand Wheel Control on operator panel.	$4,019
4415-0510	1.5"/2.5" Double Speedlay with Akron Manual Valves Lower 1.75 speedlay and upper 2.5 speedlay.	$2,045
4415-0511	1.5" Right Panel Discharge Akron Valve Hand Wheel Control	$1,981
4415-0514	4" Officer side discharge. Foward of steamer and includes 30 degree droop, 4" Elkhart Elect Control full flow valve.	$4,422
4415-0515	Recess Front Jumpline Swivel so WYE Valve Clear Rise Lid and Tray.	$143
4415-0516	4" Right Panel Discharge w/ 3" Akron Valve Handwheel Control w/Droop Location: [#LOC]	$2,879
4415-0517	4" Right Pump Panel Discharge with 3" Akron Manual Valve w/Droop Location: [#LOC]	$1,963
4415-0518	4" Right Panel Discharge w/ 3" Akron Valve Electric w/Droop Location: [#LOC]	$3,868
4415-0519	4" Right Pump Panel Discharge w/3" Akron Electric Valve & Navigator 9305 with 30 Degree Droop Location: [#LOC]	$6,489
4415-0520	4" Right Pump Panel Discharge with 3" Hale Manual Valve with 30 Degree Droop Location: [#LOC]	$2,289
4415-0521	4" Right Pump Panel Discharge with 3" Hale Electric Valve with 30 Degree Droop Location: [#LOC]	$4,269
4415-0523	4" Pump Panel Discharge Elkhart Electric UBEC1 Valve Location: [#LOC]	$3,613
4415-0524	3" Deck Gun Discharge Elkhart Unibody Manual Valve	$1,646
4415-0525	1.5" Front Bumper Discharge Elkhart Unibody Manual Valve	$1,445
4415-0526	Triple Speedlay (2) 1.5" and (1) 2.5" with Elkhart Unibody Manual Valves	$4,285
4415-0527	1.5" Crosslay w/2" Elkhart Electric Unibody UBEC1 Valve Location: [#LOC]	$2,495
4415-0528	2.5" Left Pump Panel Discharge Elkhart Unibody Electric Valve. Location: [#LOC]	$2,730
4415-0529	3" Right Pump Panel Discharge Elkhart Unibody Electric Valve Location: [#LOC]	$3,337
4415-0530	4" Pump Panel Discharge Elkhart UBEC1 Electric Valve Location: [#LOC]	$4,092
4415-0531	4" Pump Panel Discharge Akron Electric Valve with 30 Degree Droop Location: [#LOC]	$4,358
4415-0536	5" Right Pump Panel Discharge with 4" Akron Valve Handwheel Control Location: [#LOC]	$3,438
4415-0537	2.5" Crosslay Elkhart Unibody Manual Valve. To be located rearward of 1.5" crosslay(s) if applicable. Location: [#LOC]	$1,213
4415-0538	1.5" Double Speedlay with Elkhart Unibody Manual Valves	$1,720
4415-0540	Triple Speedlay (2) 1.5" and (1) 2.5" with Elkhart Unibody Manual Valves	$3,848
4415-0541	3" Deck Gun Discharge Elkhart Unibody Manual Valve.	$1,553
4415-0542	Second 1.5" Front Bumper Discharge Elkhart Unibody Manual Valve	$1,445
4415-0543	3" Right Pump Panel Discharge Akron Manual Swing Valve Location: [#LOC]	$1,646
4415-0545	5" Pump Panel Discharge with 4" Elkhart UBEC1 Electric Valve Location: [#LOC]	$4,842
4415-0547	2.5" Front Bumper Discharge Elkhart Unibody Manual Valve	$1,711
4415-0549	1.5" Front Bumper Discharge Elkhart Electric UBEC1 Valve	$2,919
4415-0550	2.5" Double Speedlay with Akron Manual Valves	$2,059
4415-0551	2.5" Right Front Hosebed Discharge Akron Manual Valve. Locate offset 11.5" from officer side hosebed side.	$1,287
4415-0552	1.5" Front Bumper Crosslay Discharge Akron Manual Valve	$1,929
4415-0553	2.5" Left Front Hosebed Discharge Akron Manual Valve located outlet shall be located 13.625" from inside hosebed wall.	$1,287
4415-0554	1.5" Triple Speedlay with Akron Valve Hand Wheel Control.	$5,789
4415-0555	3" Deck Gun Discharge Akron Manual Valve with no Plumbing form the valve to deck gun channel Dealer to install Extend-A-Gun and Plumbing from the valve to the channel..	$1,356

4415-0557	2.5" Left Rear Discharge Elkhart Unibody Manual Valve Location: [#LOC]	$1,172
4415-0558	2.5" Right Rear Discharge Elkhart Unibody Manual Valve Location: [#LOC]	$1,172
4415-0559	5" Right Pump Panel Discharge with 4" Elkhart Unibody Valve Handwheel Control Location: [#LOC]	$3,663
4415-0561	2.5" Left Panel Discharge Akron Electric Valve w/30 Degree Droop Location: [#LOC]	$2,961
4415-0562	3" Right Pump Panel Discharge Akron Electric Valve w/30degree Droop Location: [#LOC]	$3,489
4415-0563	2.5" Right Panel Discharge Akron Electric Valve w/30 Degree Droop Location: [#LOC]	$2,961
4415-0564	3" Right Pump Panel Discharge Elkhart Electric Valve w/30degree Droop Location: [#LOC]	$3,489
4415-0566	1.5" Crosslay w/2" Akron Electric Valve Location: [#LOC]	$2,495
4415-0567	2.5" Crosslay w/Akron Electric Valve. To be located rearward of 1.5" crosslay(s) if applicable. Location: [#LOC]	$2,868
4415-0568	3" Deck Gun Discharge Akron Electric Valve	$3,363
4415-0569	4" Deck Gun Discharge Akron Electric Valve	$4,856
4415-0570	1.5" Front Bumper Discharge Akron Electric Valve	$2,836
4415-0571	Second 1.5" Front Bumper Discharge Akron Electric Valve	$2,836
4415-0572	2.5" Front Bumper Discharge Akron Electric Valve	$2,975
4415-0573	Second 2.5" Front Bumper Discharge Akron Electric Valve	$2,975
4415-0574	2.5" Left Pump Panel Discharge Akron Electric Valve. Location: [#LOC]	$2,730
4415-0575	2.5" Left Panel Discharge Akron Electric Valve w/30 Degree Droop. Location: [#LOC]	$2,730
4415-0576	4" Pump Panel Discharge Akron Electric Valve Location: [#LOC]	$4,092
4415-0577	5" Pump Panel Discharge with 4" Akron Electric Valve Location: [#LOC]	$4,665
4415-0578	1.5" Left Rear Discharge Akron Electric Valve Location: [#LOC]	$2,601
4415-0579	2.5" Left Rear Discharge Akron Electric Valve Location: [#LOC]	$2,882
4415-0580	3" Left Rear Discharge Akron Electric Valve Location: [#LOC]	$3,514
4415-0581	4" Left Rear Discharge Akron Electric Valve	$4,336
4415-0582	1.5" Right Rear Discharge Akron Electric Valve Location: [#LOC]	$2,601
4415-0583	2.5" Right Rear Discharge Akron Electric Valve Location: [#LOC]	$2,882
4415-0584	3" Right Rear Dicharge Akron Electric Valve Location: [#LOC]	$3,514
4415-0585	4" Right Rear Discharge Akron Electric Valve	$4,551
4415-0586	2.5" Right Pump Panel Discharge Akron Electric Valve Location: [#LOC]	$2,730
4415-0587	3" Right Pump Panel Discharge Akron Electric Valve Location: [#LOC]	$3,337
4415-0588	4" Right Pump Panel Discharge w/3" Akron Electric Valve Location: [#LOC]	$3,589
4415-0589	5" Right Pump Panel Discharge w/3" Akron Electric Valve Location: [#LOC]	$4,239
4415-0590	2.5" Right Panel Discharge Akron Electric Valve w/30 Degree Droop Location: [#LOC]	$2,961
4415-0591	3" Right Panel Discharge Akron Electric Valve w/30 Degree Droop Location: [#LOC]	$3,614
4415-0592	4" Right Panel Discharge w/ 3" Akron Valve Electric w/Droop Location: [#LOC]	$3,868
4415-0593	3" Right Pump Panel Discharge Akron Electric Valve w/30degree Droop Location: [#LOC]	$3,489
4415-0594	2.5" Right Panel Discharge Akron Electric Valve w/30 Degree Droop Location: [#LOC]	$2,961
4415-0595	1.5" Left Front Hosebed w/2" Akron Electric Valve	$2,551
4415-0596	2.5" Left Front Hosebed Akron Electric Valve	$3,128
4415-0597	3" Left Front Hosebed Akron Electric Valve	$3,775
4415-0598	Second Left Front Hosebed 1.5" w/2" Akron Electric Valve	$2,551
4415-0599	Second Left Front Hosebed 2.5" Akron Electric Valve	$3,128
4415-0600	Second Left Front Hosebed 3" Akron Electric Valve	$3,775
4415-0601	1.5" Crosslay w/2" Akron Electric Valve Location: [#LOC]	$2,495
4415-0602	1.5" Right Front Hosebed w/2" Akron Electric Valve	$2,551
4415-0603	2.5" Right Front Hosebed Akron Electric Valve	$3,128
4415-0604	3" Right Front Hosebed Akron Electric Valve	$3,775
4415-0605	Second Right Front Hosebed 1.5" w/2" Akron Electric Valve	$2,551
4415-0606	Second Right Front Hosebed 2.5" Akron Electric Valve	$3,128
4415-0607	Second Right Front Hosebed 3" Akron Electric Valve	$3,775
4415-0608	Double 1.5" Speedlay w/2" Akron Electric Valves	$5,001
4415-0609	Triple 1.5" Speedlay w/2" Akron Electric Valves	$7,614
4415-0610	Triple (2) 1.5" & (1) 2.5" Speedlay w/(2) 2" & (1) 2.5" Akron Electric Valves	$9,177
4415-0611	Triple (2) 1.5" & (1) 2.5" Speedlay w/(2) 2" & (1) 2.5" Akron Electric Valves	$9,177
4415-0614	3" Left Panel Discharge Top Mount Akron Electric Valve Location: [#LOC]	$3,430
4415-0615	3" Left Panel Discharge Top Mount Akron Electric Valve w/30 Degree Droop Location: [#LOC]	$3,709
4415-0616	Third Right Front Hosebed Discharge 2.5" Akron Manual Valve.	$1,287
4415-0617	2.5" Left Panel Discharge Akron Manual 3" Valve w/30 Degree Droop Location: [#LOC]	$1,431
4415-0618	2.5" Auxillary Deck Gun Discharge Akron Manual Valve. Plumbed from foam manifold and "Y" into Deck Gun pipe downstream from main Deck Gun discharge valve.	$1,001
4415-0619	4" Right Pump Panel Discharge with 3" Akron Manual Valve The 4" NST Adapter shall be a integral part of the valve. Location: [#LOC]	$1,683
4415-0620	3" Right Rear Discharge Elkhart Unibody Manual Valve Location: [#LOC]	$1,802
4415-0621	3" Left Front Hosebed Discharge Elkhart Unibody Manual Valve	$2,064
4415-0622	3" Right Front Hosebed Discharge Elkhart Unibody Manual Valve	$2,064
4415-0623	3" Left Rear Discharge Elkhart Unibody Manual Valve Location: [#LOC]	$1,802
4415-0626	Triple Speedlay (forward to rearward or bottom to top) (2) 1.5" and (1) 2.5" with Akron Manual Valve. Speedlays are side by side and located inside transverse compartment.	$1,886
4415-0627	3" Deck Gun Discharge Elkhart Electric Unibody UBEC3Valve	$5,149
4415-0628	5" Pump Panel Discharge Elkhart Electric UBEC3 Valve Location; [#LOC]	$5,396
4415-0629	2.5" Right Rear Discharge Elkhart Unibody Manual Valve Location: [#LOC]	$1,172
4415-0630	4" Light Pump Panel Discharge w/3" Akron Electric Valve Location: [#LOC]	$3,589
4415-0631	4" Rear Discharge w/4" Akron Valve Handwheel Control for Rear Mount. The 4" NST 30 degree Adapter shall be a integral part of the valve.	$3,616
4415-0632	1.5" Left Front Hosebed Preconnect Elkhart Unibody Manual Valve	$960
4415-0633	1.5" Right Front Hosebed Preconnect Elkhart Unibody Manual Valve	$960

4415-0634	Second Left Front Hosebed Discharge 2.5" Elkhart Unibody Manual Valve	$1,418
4415-0636	4" Right Pump Panel Discharge with 3" Elkhart Unibody Manual Valve Location: [#LOC]	$1,876
4415-0637	Second Left Front Hosebed Discharge 2.5" w/ 3" Elkhart Unibody Manual Valve and shall terminate with a 3"FNPT X 2.5"MNST adapter.	$2,064
4415-0638	Second Right Front Hosebed Discharge 2.5" w/3" Elkhart Unibody Manual Valve and shall terminate with a 3"FNPT X 2.5"MNST adapter.	$2,064
4415-0659	2.5" Left Pump Panel Discharge Elkhart Unibody Electric Valve with Droop. Location: [#LOC]	$2,843
4415-0660	2.5" Right Panel Discharge Elkhart Electric Valve w/Droop Location: [#LOC]	$2,842
4415-0661	4" Right Pump Panel Discharge w/3" Elkhart Electric Unibody Valve Location: [#LOC]	$3,222
4415-0662	3" Deck Gun Discharge Elkhart Electric Unibody Valve	$3,363
4415-0665	1.5" Front Bumper Discharge Akron Electric Valve & Navigator 9315	$5,210
4415-0666	Triple (2) 1.5" & (1) 2.5" Speedlays w/(2) 2" & (1) 2.5" Akron Electric Valves & Navigator 9315	$15,937
4415-0667	2.5" Left Panel Dishcarge Akron Electric Valve & Navigator 9315 w/30 Degree Droop Location: [#LOC]	$5,026
4415-0668	2.5" Right Panel Discharge Akron Electric Valve & Navigator 9315 w/30 Degree Droop Location: [#LOC]	$5,026
4415-0669	2.5" Left Rear Discharge Akron Electric Valve & Navigator 9315 Location: [#LOC]	$5,509
4415-0670	3" Right Panel Discharge Akron Electric Valve & Navigator 9315 w/30 Degree Droop Location: [#LOC]	$5,856
4415-0671	1.5" Double Speedlay with Akron Manual Valves	$1,676
4415-0672	1.5" Triple Speedlay with Akron Manual Valve	$2,632
4415-0673	Triple Speedlay (2) 1.5" and (1) 2.5" with Akron Manual Valve	$3,756
4415-0674	1.5" Double Speedlay with Elkhart Manual Valves	$1,815
4415-0675	1.5" Triple Speedlay Elkhart Manual Valves	$2,841
4415-0676	Triple Speedlay (2) 1.5" and (1) 2.5" with Elkhart Manual Valves	$4,285
4415-0681	2.5" front bumper discharge with Akron manual valve. For use with rear mount pump.	$1,563
4415-0718	1.5" Single Speedlay with Akron Manual Valves to hold a 100ft of 1.75.	$907
4415-0719	3" Deck Gun Discharge Akron Electric Valve & Navigator 9315	$5,986
4415-0720	4" Right Pump Panel Discharge w/3" Akron Electric Valve & Navigator 9315 Location: [#LOC]	$6,209
4415-0721	Quad Speedlay (3) 1.5" / (1) 2.5" with Akron Manual Valves. Located inside transverse compartment.	$2,793
4415-0722	3" Deck Gun Discharge Akron Electric Valve with a 9315 valve controller with pressure reading only. [#LOC]	$3,743
4415-0723	4" Pump Panel Discharge Akron Electric Valve & Navigator 9315 Location: [#LOC]	$7,227
4415-0724	4" Rear Mount Discharge w/3" Akron 9315 Electric Valve to read Flow and Pressure with 30 degree droop Location: [#LOC]	$6,209
4415-0725	4" Rear Mount Discharge w/3" Akron 9315 Electric Valve to read Pressure Location: [#LOC]	$3,542
4415-0726	1.5" Front Bumper Discharge Akron Electric Valve & Navigator 9315 with Pressue Reading only.	$3,178
4415-0727	1.5" Crosslay w/2" Akron Electric Valve & Navigator 9315 to Read Pressure only Location: [#LOC]	$2,956
4415-0728	2.5" Rear Mount Discharge Akron Electric Valve & Navigator 9305 to Read Pressure only. Location: [#LOC]	$3,101
4415-0730	2.5" Left Rear Discharge UBEC3 Electric Valve Location: [#LOC]	$4,953
4415-0731	2.5" Left Pump Panel Discharge UBEC3 Electric Valve with 30 degree droop Location: [#LOC]	$4,925
4415-0732	2.5" Right Pump Panel Discharge UBEC3 Electric Valve with 30 degree droop Location: [#LOC]	$4,925
4415-0733	4.5" Right Pump Panel Discharge with 3" Akron Manual Valve w/Droop Location: right side discharge 1 [#LOC]	$2,136
4415-0735	3" Left Hosebed Akron Electric Valve located Driver side rear below hosebed.	$3,775
4415-0736	3" Right Hosebed Akron Electric Valve located Officer side rear below hosebed.	$3,775
4415-0739	3" Right Pump Panel Discharge Elkhart Electric Valve w/30degree Droop to Terminate with 2.5" MNST w/cap Location: [#LOC]	$3,489
4417-0000	Ground Sweep Nozzle	$1,310
4417-0001	Dual Ground Sweep Nozzles 50 GPM	$1,392
4417-0019	Fire Shop Bezel Chrome - Side Discharge	$83
4417-0020	Deck Gun Remote 18" Ext-a-Gun 3" Plumbing	$3,520
4417-0021	Deck Gun Remote Ext-a-Gun 4"	$4,015
4417-0026	Valve Drain Automatic. For: [#LOC]	$69
4417-0030	Monitor Akron 3578 Elec 2000	$8,704
4417-0031	Monitor Akron 3570 Manual 2000	$3,190
4417-0032	Monitor Scorpion wireless RF radio 2000 GPM	$9,769
4417-0034	Deck Gun 18" Extend-A-Gun 3"	$1,756
4417-0039	Akron DeckMaster 3440 Electric 1250gpm Monitor w/Stow	$10,140
4417-0040	Akron 5177 Akromatic 2.5" Master Stream Nozzle for an Akron 3440 DeckMaster Monitor	$1,548
4417-0041	Akron 1577 SaberMaster 2.5" Nozzle for an Akron 3440 DeckMaster Monitor	$2,959
4417-0042	Akron Tether Kit with 30' Cable for an Akron Monitor Location: [#LOC]	$981
4417-0043	Task Force Hurricane RC Electric 1250gpm Monitor	$11,417
4417-0044	Task Force M-ERP-NJ 2.5" Masterstream Electric Nozzle for a Hurricane RC Monitor	$1,711
4417-0045	Elkhart Stinger 8297-25 Manual 800gpm Monitor w/portable base and adapter to mount to deck gun discharge or extend-a-gun	$2,830
4417-0046	Elkhart 8500 Vulcan RF Monitor with Panel Mounted and Hand-Held Remote Controls w/adapter to mount to deck gun discharge or extender	$5,643
4417-0047	Elkhart SM-1250E Select-O-Matic 2.5" Electric Nozzle	$2,141
4417-0048	Elkhart 8598 Electrically Actuated Extender	$2,562
4417-0051	Thread Type: All 1.5" discharges to be NPSH threads. All 2.5" inlets and discharges to be CSA (Ontario) threads as an integral part of the valve.	$560
4417-0052	Extend Specified Hosebed Preconnect up to top of hosebed. Top of preconnect to be below top of hosebed. Location: [#LOC]	$356
4417-0054	Preconnect extension (Each). The front hosebed preconnect to be extended to the rear of the hosebed area. Includes smooth plate cover. Location: [#LOC]	$354
4417-0055	"Superior" Style Cable Controls for Top Mount	$133
4417-0057	Ferrell Compression Fittings for all Discharge and Intake Bleeder Lines	$540
4417-0059	Extend Specified Hosebed Preconnect up to mid-point of hosebed. Center of preconnect to be approximately center of hosebed height. Location: [#LOC]	$268

4417-0062	Class 1 Style Cable Controls for Top Mount Discharges and Intakes.	$343
4417-0063	Class 1 air operated drains (upgrade) for all discharges and intakes. Includes switch on pump panel for each valve.	$108
4417-0067	Monitor 4" TFT Monsoon Manual with TFT Master Stream 2000 gpm manual Nozzle.	$5,692
4417-0068	TFT Tether Kit with 30' Cable for an TFT Monitor Location: [#LOC]	$682
4417-0073	Deck Gun 12" Extend-A-Gun 3"	$1,756
4417-0075	Monitor 4" TFT Monsoon Electric with TFT Master Stream 2000 gpm electric Nozzle with Radio Remote.	$12,856
4417-0078	Thread Type: All 1.5" discharges to be NPSH threads. All 2.5" inlets and discharges to be (Western Canada Fire Underwriters Association) threads as an integral part of the valve.	$727
4417-0079	9304 Akron Navitgator electric valve control. Location: All electric discharge valves IPOS.	$527
4417-0080	All 1.5" Threads to be IPT threads	$60
4417-0081	Vented Cap&Plug For All Discharges/Intakes	$512
4417-0082	Deck Gun Remote 12" Ext-a-Gun 3" Plumbing	$3,520
4417-0083	Elkhart 8297F Stinger RF Monitor with Panel Mounted and Hand-Held Remote Controls w/adapter to mount to deck gun discharge or extender	$8,030
4417-0084	Task Force M-ERP-NJ 2.5" Masterstream Electric Nozzle for a Hurricane RC Monitor	$1,711
4417-0085	Thread Type: All 1.5" discharges to be NPSH threads.	$280
4417-0086	Task Force Typhoon RC Electric Monitor with 1500gpm nozzle. Include Radio Remote Control	$12,034
4417-0088	Bleeder Drain Valve Plumbed to: [#LOC]	$101
4417-0090	Additional control for deck gun electric valve locate adjacent to the outlet.	$1,524
4417-0092	Task Force Typhoon RC Electric Monitor without nozzle. Include Radio Remote Control (Require Nozzle)	$9,659
4417-0097	Innovative Controls Push/Pull Valve Control Handles IPOS.	$43
4417-0099	Akron Wireless Deck Gun Remote Monitor Controller.	$1,406
4417-0100	Akron 3600 Wireless Remote Control.	$1,509
4430-0008	Advent 30 Foam System for a Single Foam Tank	$17,686
4430-0010	Advent 120 Foam System A and B Type	$26,968
4430-0011	1600 Rockwood Around The Pump Foam System	$3,713
4430-0013	1500 Williams Around The Pump Foam System	$6,301
4430-0014	2.1A Hale Foam Logix Foam System	$6,260
4430-0015	3.3 Hale Foam Logix Foam System	$13,299
4430-0016	5.0 Hale Foam Logix Foam System	$14,993
4430-0017	400 Rockwood around the pump foam system.	$2,797
4430-0018	1600 Hypro/Foam Pro Foam System	$7,261
4430-0019	2001 Hypro/Foam Pro Foam System	$11,793
4430-0020	2002 Hypro/Foam Pro Foam System	$15,033
4430-0028	Pneumax 140-P Compressed Air Foam System	$28,596
4430-0029	Pneumax 140-SP Silver Compressed Air Foam System	$16,998
4430-0031	Eclipse Compressed Air Foam System 1000 GPM Manifold w/2002 FoamPro	$70,172
4430-0032	CAFSPRO with 2.1 Foam Logix Compressed Air Foam System with 750gpm Manifold	$41,847
4430-0034	Pneumax 80-P PTO Platinum Compressed Air Foam System	$21,578
4430-0035	Pneumax 80-SP PTO Silver Compressed Air Foam System	$15,050
4430-0037	Pneumax 200-P Platinum Compressed Air Foam System	$33,177
4430-0038	Pneumax 200-SP Silver Compressed Air Foam System	$18,655
4430-0039	Eclipse Compressed Air Foam System 500 GPM Manifold w/2001 FoamPro	$65,434
4430-0041	WATP 500 A/B Foam System Include 1.5" Foam pick up.	$8,617
4430-0042	Advent 12 Foam System for a Single Foam Tank	$17,504
4430-0043	Advent 12 Dual Foam System for Dual Foam Tanks	$19,216
4430-0045	95 GPM Akron Foam Eductor Location: [#LOC]	$1,921
4430-0046	125 GPM Elkhart Foam Eductor Location: [#LOC]	$2,395
4430-0047	125 GPM Akron Foam Eductor Location: [#LOC]	$2,194
4430-0048	95 GPM Elkhart Foam Eductor Location: [#LOC]	$2,185
4430-0051	Advent 30 Dual Foam System for Dual Foam Tanks	$21,749
4430-0052	CAFSPRO with 3.3 Foam Logix Compressed Air Foam System with 750gpm Manifold	$52,812
4430-0053	CAFSPRO with 5.0 Foam Logix Compressed Air Foam System with 750gpm Manifold	$53,710
4430-0056	125 GPM Elkhart Foam Eductor w/air actuated foam valve Location: [#LOC]	$2,892
4430-0057	125 GPM Arkon Foam Eductor w/air actuated foam valve Location: [#LOC]	$2,573
4430-0058	Hot Shift Clutch - Required with CAFS system	$2,618
4430-0059	Eclipse Compressed Air Foam System 500 GPM Manifold w/2002 FoamPro	$68,674
4430-0060	CAFSPRO 5.0 Foam Logix Compressed Air Foam System with 1000 gpm manifold	$55,167
4430-0061	FoamPro 3012 Foam System.	$20,002
4430-0062	Advent 120 Foam System single	$24,713
4430-0063	FoamPro 3040D Foam System with elect/hyd drive.	$34,631
4430-0066	Foam Tank To Pump 1" Air/Act for Dealer inatall foam system.	$731
4430-0070	125 GPM Akron Simple Apparatus Foam System	$1,394
4430-0071	1500V Williams A/B Around The Pump Foam System	$7,752
4430-0073	1.5 Feecon Around The Pump Foam System	$3,773
4430-0075	2.0 Feecon Around The Pump Foam System	$3,885
4430-0076	Eclipse Waterous Compressed Air Foam System 1000 GPM Manifold.	$55,140
4430-0077	Waterous Advantus 6.0 Foam System	$16,873
4430-0078	Classic 140 Compressed Air Foam System. Shall include (5) Discharge outlets (1) 2.5" Left Hosebed Preconnect Discharge, (2) 1.5" Crosslay outlets, and (2) booster reels.	$36,631
4430-0079	The foam system performance shall be tested and certified in compliance with 2009 NFPA 1901.	$251
4430-0081	1500 Williams Around The Pump Foam System Up Graded to 2000gpm at 3%	$2,457
4430-0085	Classic 140 Compressed Air Foam System.	$20,803
4432-0001	Akron 5078 Electric 2000 GPM Nozzle	$2,019

4432-0002	Akron 5070 Manual 2000 GPM Nozzle	$1,553
4432-0003	Elkhart SM2000 Electric Nozzle	$2,007
4432-0012	Advent Ratio Controller 2" Discharge. Plumbed to: [#LOC]	$1,514
4432-0013	Advent Ratio Controller 2.5" Discharge. Plumbed to: [#LOC]	$1,517
4432-0014	Advent Ratio Controller 3" Discharge. Plumbed to: [#LOC]	$1,539
4432-0015	Advent Ratio Controller 4" Discharge. Plumbed to: [#LOC]	$1,705
4432-0016	Advent Ratio Controller 5" Discharge. Plumbed to: [#LOC]	$2,216
4432-0019	Foam Pro Remote Start Switch	$614
4432-0020	Eclipse 1.5"/3.0" Compressed Air Foam System Discharge Kit Location: [#LOC]	$18
4432-0022	1.5" Compressed Air Foam System Discharge Kit Location: [#LOC]	$293
4432-0023	2.0" Compressed Air Foam System Discharge Kit Location: [#LOC]	$295
4432-0024	2.5" Compressed Air Foam System Discharge Kit Location: [#LOC]	$298
4432-0025	3.0" Compressed Air Foam System Discharge Kit Location: [#LOC]	$333
4432-0026	3" Deck Gun Discharge Eclipse Compressed Air Foam System	$3,286
4432-0027	3" Deck Gun Compressed Air Foam System	$3,569
4432-0036	A/B Hypro/FoamPro Foam Selector	$1,983
4432-0037	A/B Class 1 Manual Foam Selector	$2,862
4432-0045	Hot Shift Clutch	$2,696
4432-0052	Remote Foam Tank Fill (Foam Pro's "Power Fill")	$517
4432-0054	Akron Quick Disconnect Foam Pickup Tube on Driver's Side Pump Panel for Eductor Located on: [#LOC]	$415
4432-0055	Elkhart Quick Disconnect Foam Pickup Tube on Driver's Side Pump Panel for Eductor Located on: [#LOC]	$590
4432-0056	Hale EZ-Fill Foam Tank Refill System for a Single Foam Tank Location: [#LOC]	$2,435
4432-0057	Hale EZ-Fill Foam Tank Refill System for Dual Foam Tanks Location: [#LOC]	$2,748
4432-0058	Akron Quick Disconnect Foam Pickup Tube on Officer's Side Pump Panel for Eductor Located on: [#LOC]	$415
4432-0059	Elkhart Quick Disconnect Foam Pickup Tube on Officer's Side Pump Panel for Eductor Located on: [#LOC]	$590
4432-0060	Label for ATP Foam Systems	$29
4432-0061	Foam Refill Kit Foampro 12 volt Location: [#LOC]	$2,753
4432-0063	Hale Foam Logix Air Actuated A/B Selector	$3,238
4432-0064	Hypro Foampro Electric Acutated A/B Selector	$3,040
4432-0065	3" Deck Gun CAFSPRO Compressed Air Foam System	$5,694
4432-0066	Additional 3/4" Foam Tank Valve for 95 Eductor and Dual Foam Cells	$399
4432-0071	Foam Pickup 2" on Driver's Side Pump Panel for 3040D Foam System with Pickup Tube.(Montreal only)	$962
4432-0072	Foam Tank Fill 1.5" Air Act for a 3040D Foam System.(Montreal only)	$554
4432-0074	.375 Foam Maniflod Drain	$114
4432-0075	FoamPro Advanced Digital Controller	$117
4432-0076	Foam Pickup 2" on Officer's Side Pump Panel for 3040D Foam System with Pickup Tube.(Montreal only)	$962
4432-0077	Foam Pickup 10 feet with 1.0 PVC Clear Spiraflex Hose IPOS	$208
4432-0078	Foam tank drain plumbed to side panel with valve and 3/4" male garden hose connection. To allow filling of remote foam unit and pails from tank.	$751
4432-0079	A/B Class 1 Manual Foam Selector	$2,862
4432-0080	Special CAFS/FOAM Manifold for (4) preconnects, Deck Gun, and 3" Right Rear discharge.	$5,265
4432-0082	Foam Pickup 2" on Side Pump Panel. With Manual valve and Pickup Tube.	$699
4432-0083	Deck Gun Foam Tank To Pump Connection Provide a Manual 1.5" Valve Locate Next to Deck gun outlet.	$701
4432-0089	CAFS Manual Air Valve to be .3/4" Valve in place of standard.	$119
4432-0090	CAFS/Foam System Operation Label "Operate only (2) 1 3/4" Discharges or (1) 2 1/2" at a time"	$158
4432-0091	Special Design 5" Foam/Water Manifold with Check Valves.	$3,350
4432-0093	Hot Shot Ratio Controller 5" . Plumbed to: [#LOC]	$2,672
4432-0094	Waterous Electric Acutated A/B Selector	$2,907
4432-0096	Hale Foam Logix Remote Start Switch	$646
4432-0097	.75 Foam Maniflod Drain with 1/4 turn valve.	$399
4432-0099	Foam System Plumbed to [#LOC]	$261
4432-0100	2.0" Compressed Air Foam System Discharge Kit with Electric actuated 1/2" valve. Location: [#LOC]	$295
4432-0101	2.5" Compressed Air Foam System Discharge Kit with Electric actuated 3/4" valve. Location: [#LOC]	$298
4432-0104	Hale Manual Single Foam Flush System.	$1,013
4432-0105	A/B Foam Selector locate Driver side walk way recess in box on diamond plate panel at front of module.	$150
4435		$0
4435-0001	Class 1 Intelli-Tank Water Tank Level Gauge	$427
4435-0002	Class 1 Intelli-Tank Foam Tank Level Gauge	$441
4435-0003	Class 1/Whelen 500 Water Tank Level Gauge Package Location of Whelen 500 Tank Level Lights: [#LOC]	$3,465
4435-0004	Sight Tube Water Tank Level Gauge. Located driver's side front of body.	$439
4435-0005	Innovative Controls 5 Water Tank Level Gauge	$400
4435-0006	Innovated Contols 5 Foam Tank Level Gauge	$626
4435-0007	Class 1 Water Bar graph style Tank Level Gauge	$672
4435-0008	Class 1 foam Bar graph style Tank Level Gauge	$890
4435-0009	Fire Research Tank Vision model WL2600 A Foam Tank Level Gauge	$827
4435-0010	Fire Research Tank Vision model WL2000 Water Tank Level Gauge	$719
4435-0011	Fire Research Tank Vision model WL2700 B Foam Tank Level Gauge	$826
4435-0012	Pump Overheat Gauge Indicator	$317
4435-0013	Class 1 Pressure 4.5" Gauge (30-0-600 PSI)	$168
4435-0014	Dual Read 4.5" Pressure Gauge (30-0-600 psi/100-0-4140 KPA)	$252
4435-0015	2.5" Class 1 Pressure Gauge (30-0-600). Discharge: [#LOC]	$120
4435-0016	Dual Read 2.5" Pressure Gauge (30-0-600 psi/100-0-4140 KPA). Discharge: [#LOC]	$170
4435-0018	Dual Read 3.5" Pressure Gauge (30-0-600 psi/100-0-4140 KPA). Discharge: [#LOC]	$231
4435-0019	3.5" Class 1 Pressure Gauge (30-0-600). Discharge: [#LOC]	$143
4435-0020	MC Gauge Heater Line controls and stripes for 4 gauges	$651

4435-0021	Gauge Heater Strips Additional (EA)	$123
4435-0022	6" NoShock Pressure Gauge	$590
4435-0023	4" NoShock Pressure Gauge	$179
4435-0024	6" Class 1 Pressure Gauge (30-0-600)	$580
4435-0025	Flowminder Super System. Discharge: [#LOC]	$2,405
4435-0026	Flowminder System with Totalizer. Discharge: [#LOC]	$1,555
4435-0027	Flow Meter Value System. Discharge: [#LOC]	$1,426
4435-0030	Transmission Temperature Gauge	$219
4435-0031	Pump hourmeter on pump operators panel.	$136
4435-0033	Ammeter Gauge on Pump Operator's Panel	$248
4435-0034	Fuel Level Gauge on Pump Operator's Panel	$300
4435-0035	Enfo III System on Pump Operator's Panel	$909
4435-0036	Engine Gauge Package for Electronic Engine	$630
4435-0038	Class 1 Engine Status Center on Pump Operator's Panel	$1,495
4435-0040	FRC Tachplus engine monitoring display.	$1,226
4435-0047	Class 1 Tank Level Intel Water Gauge Additional Location: [#LOC]	$490
4435-0049	Class 1 Tank Level Water LED graph Gauge Additional Location: [#LOC]	$672
4435-0050	FRC Tank Level Water Tank Vision Gauge Additional Location: [#LOC]	$457
4435-0051	Innovated Controls 5 Light Tank Level Water Gauge Additional Location: [#LOC]	$599
4435-0052	Class 1 Tank Level Water Mini Gauge Additional Location: [#LOC]	$448
4435-0053	FRC Tank Level Water Tank Vision model WLA205-A00 Mini Gauge Location: [#LOC]	$340
4435-0054	Innovated Controls 5 Light Tank Level Water Mini Gauge Location: [#LOC]	$468
4435-0055	Class 1 Tank Level Intelli Foam Gauge Additional Location: [#LOC]	$490
4435-0056	Class 1 Tank Level Foam Mini Gauge Additional Location: [#LOC]	$448
4435-0057	FRC Tank Level A Foam Tank Vision model WLA205-A00 Mini Gauge Additional Location: [#LOC]	$409
4435-0058	FRC Tank Level B Foam Tank Vision model WLA205-A00 Mini Gauge Location: [#LOC]	$409
4435-0059	Innovated Controls Tank Level Foam Mini Gauge Additional Location: [#LOC]	$468
4435-0063	Duplex Master Gauge for CAFS or Industrial Foam Systems.	$453
4435-0065	2.5" NoShok Pressure Gauge (30-0-600) For: [#LOC]	$130
4435-0066	IC5/Whelen 500 Water Tank Level Gauge Package Location of Whelen 500 Tank Level Lights: [#LOC]	$3,439
4435-0067	Class 1/Whelen PSTank Water Tank Level Gauge Package. Location of Whelen PSTank Strip-Lights: [#LOC]	$1,631
4435-0068	IC5/Whelen PSTank Water Tank Level Gauge Package Location of Whelen PSTank Strip-Lights: [#LOC]	$1,606
4435-0069	Enfo IV System on Pump Operator's Panel	$815
4435-0070	Fire Research Tank Vision model WL2600 class A and WL2700 class B Foam Tank Level Gauges	$1,649
4435-0071	FRC Tank Vision model WLA205-A00 Tank Level A and B Foam Gauges Location: [#LOC]	$815
4435-0072	Fire Research Tank Vision Water Tank Level Gauge with Automatic Tank Filling System model ATA400 Location: [#LOC]	$2,522
4435-0074	FRC Water Tank Level Gauge with Driver for Spartan Chassis only.	$957
4435-0081	Audible and visual indicators on driver side pump panel. (1) audible/visual indicator for high engine temp and low oil pressure and (1) audible/visual for high trans temp.	$249
4435-0083	Innovative Controls 10 LED SL series Water Tank Level Gauge	$436
4435-0084	Innovated Contols 10 LED series Foam Tank Level Gauge	$626
4435-0085	Innovated Controls 10 LED SL series Tank Level Water Gauge Additional Location: [#LOC]	$599
4435-0086	Innovated Controls 10 LED series Tank Level Water Mini Gauge Location: [#LOC]	$468
4435-0087	Innovated Controls IC 10 LED SL series Tank Level Foam Mini Gauge Additional Location: [#LOC]	$468
4435-0088	IC 10 LED SL series/Whelen 500 Water Tank Level Gauge Package Location of Whelen 500 Tank Level Lights: [#LOC]	$3,439
4435-0089	IC 10 LED SL series/Whelen PSTank Water Tank Level Gauge Package Location of Whelen PSTank Strip-Lights: [#LOC]	$1,606
4435-0090	Additional PSTank Level Strip-Light Located: [#LOC]	$390
4435-0092	2.5" Class 1 Pressure Gauge (30-0-400). Discharge: [#LOC]	$120
4435-0093	3.5" Class 1 Pressure Gauge (30-0-400). Discharge: [#LOC]	$143
4435-0094	Class 1 Pressure 4.5" Gauge (30-0-400 PSI)	$168
4435-0095	2.5" Pressure Gauge (30-0-400). Discharge: [#LOC] Color: [#COL]	$209
4435-0096	3.5" Pressure Gauge (30-0-400). Discharge: [#LOC] Color: [#COL]	$216
4435-0097	4.5" Pressure Gauge (30-0-400). Color: [#COL]	$221
4435-0099	Flow Meter Value System. Discharge: right side discharge 4	$1,426
4435-0100	Flow Meter Value System. Discharge: left side discharge 4	$1,426
4435-0101	2.5" Span Pressure Gauge (30-0-600). Discharge: [#LOC]	$113
4435-0102	3.5" Span Pressure Gauge (30-0-600). Discharge: [#LOC]	$141
4435-0103	Span Pressure 4.5" Gauge (30-0-600 PSI)	$162
4435-0104	MC Series 2000 4 Light Water Tank Level Gauge	$566
4435-0105	MC Series 2000 4 Light Series Foam Tank Level Gauge	$711
4435-0106	Dual Scale 3.5" Pressure Gauge 0-400 PSI / 100-2758 KPA. Replaces Standard	$281
4435-0107	Primer motor rotary cut-off switch. Locate on pump panel.	$186
4435-0108	Digital Pressure Gauge IPO Duplex Gauge	$723
4435-0109	2.5" Class 1 Pressure Gauge (30-0-600). IPO Duplex	$120
4435-0110	Pump Overheat Gauge Indicator with Audible Alarm	$405
4435-0111	MC Series 500 4 LED Series Water Tank Level Gauge	$671
4435-0112	Class 1 Pressure 4.5" Gauge (30-0-300 PSI)	$168
4435-0113	FRC Vision/Whelen PSTank Water Tank Level Gauge Package Location of Whelen PSTank Strip-Lights: [#LOC]	$2,165
4435-0114	Digital CAFS CFM Flow Meter	$1,838
4435-0115	2.5" NoShok Pressure Gauge (-30-0-600 PSI/100-0-4140KPA) For: [#LOC]	$144
4435-0116	4" NoShock Dual Read Pressure Gauge 30-0-600PSI/100-0-4140KPA	$189

4435-0117	FRC Tank Level Foam Tank Vision Gauge Additional Location: [#LOC]	$519
4435-0118	4" NoShock Dual Read Pressure Gauge 30-0-400PSI/100-0-2750KPA	$189
4435-0119	2.5" NoShok Pressure Gauge (0-400 PSI/-0-2700KPA) For: [#LOC]	$144
4435-0120	Duplex Master Gauge (0-400 PSI) for CAFS or Industrial Foam Systems.	$453
4435-0122	Fire Research Tank Vision model WL2000 Water Tank Level Gauge w/an audible alarm low level buzzer shall be installed. The buzzer shall sound when the tank volume indicator drops to 1/4 tank.	$858
4435-0123	FRC Insight model FPA410 Ultimate Pressure Gauge LPM/KPA Location: [#LOC]	$1,813
4435-0124	Class 1 Pressure 6" Gauge (30-0-400 PSI)	$569
4435-0125	Class Digital Pressure Gauge Discharge: [#LOC]	$723
4435-0126	Digital Master Pressure Gauge	$690
4435-0127	3.5" Span Pressure Gauge (0-400). Discharge: [#LOC]	$145
4435-0128	Dual Read 2.5" Span Pressure Gauge (0-300 psi/0-2050KPA). Discharge: [#LOC]	$161
4435-0129	Dual Read 6.0" Span Pressure Gauge (30-0-400 psi/100-0-2750 KPA)	$331
4435-0130	FRC Insight model FPA400 Ultimate Master Flow Gauge	$1,397
4435-0131	2.5" Class 1 Pressure Gauge (0-300). Discharge: [#LOC]	$127
4435-0133	FRC/Whelen 500 Water Tank Level Gauge Package Location of Whelen 500 Tank Level Lights: [#LOC]	$3,408
4435-0134	FRC Foam Tank Level Gauge "Class B Foam" with Driver for Spartan Chassis only.	$1,080
4435-0135	Class 1 Intelli/Whelen PSTank Water Tank Level Gauge Package Location of Whelen PSTank Strip-Lights: [#LOC]	$2,052
4435-0139	Span Pressure 4.5" Gauge (0-400 PSI)	$168
4435-0140	Span Master Intake/Pressure 4.5" 50/50 Gauge (30-0-300)	$283
4435-0147	Innovative Controls 14 LED SL series Water Tank Level Gauge	$442
4435-0149	IC 14 LED SL series/Whelen 500 Water Tank Level Gauge Package Location of Whelen 500 Tank Level Lights: [#LOC]	$3,468
4435-0151	4.5" Class 1 Pressure Gauge (30-0-600) Black Face w/White letters.	$179
4435-0152	2.5" Class 1 Pressure Gauge (30-0-600). Discharge with Black Face and White Letters: [#LOC]	$127
4440-0004	2.5" Side Suction Top Mount Control Handle Akron Manual Valve Location: [#LOC]	$1,285
4440-0005	2.5" Left Intake Akron Manual Valve	$969
4440-0006	2.5" Right Intake Akron Manual Valve	$969
4440-0007	2.5" Left Rear Intake Akron Manual Valve	$1,564
4440-0008	2.5" Right Rear Intake Akron Manual Valve	$1,135
4440-0010	3" Left Intake Akron Manual Valve	$1,591
4440-0011	3" Right Intake Akron Manual Valve	$1,627
4440-0012	3" Right Rear Intake Akron Manual Valve	$1,867
4440-0014	5" Front Intake without Valve	$3,087
4440-0015	5" Front Intake w/5" Air Actuated Valve and Relief	$4,868
4440-0016	5" Right Rear Intake No Valve	$2,355
4440-0017	5" Right Rear Intake w/5" Air Actuated Valve and Relief.	$3,920
4440-0025	5" Front Intake with no Valve Plumbed Thru Front Bumper	$3,450
4440-0026	5" Front Intake w/5" Air Actuated Valve and Relief Plumbed Thru Front Bumper	$5,233
4440-0027	2.5" Left Intake Hale Manual Valve	$988
4440-0028	2.5" Right Intake Hale Manual Valve	$1,162
4440-0029	3" Right Intake Hale Manual Valve	$2,058
4440-0030	2.5" Side Suction Top Mount Control Handle Hale Manual Valve Location: [#LOC]	$1,473
4440-0031	3" Left Intake Hale Manual Valve	$1,615
4440-0033	2.5" Left Rear Intake Hale Manual Valve	$1,700
4440-0034	2.5" Right Rear Intake Hale Manual Valve	$1,270
4440-0035	3" Right Rear Intake Hale Manual Valve	$2,045
4440-0036	2.5" Left Intake Elkhart Manual Valve	$1,101
4440-0037	3" Left Intake Elkhart Manual Valve	$1,783
4440-0038	2.5" Left Rear Intake Elkhart Manual Valve	$1,696
4440-0039	2.5" Side Suction Top Mount Control Handle Elkhart Manual Valve Location: [#LOC]	$1,416
4440-0040	2.5" Right Intake Elkhart Manual Valve	$1,101
4440-0041	3" Right Intake Elkhart Manual Valve	$1,820
4440-0042	2.5" Right Rear Intake Elkhart Manual Valve	$1,264
4440-0043	3" Right Rear Intake Elkhart Manual Valve	$2,059
4440-0044	5" Left Rear Intake w/5" Air Actuated Valve and Relief. Requires air actuated tank to pump with side mount pump module configuration.	$4,259
4440-0045	4" Left Rear Intake Akron Electric Valve w/Intake Relief Valve	$4,566
4440-0046	4" Right Rear Intake Akron Electric Valve w/Intake Relief Valve	$4,566
4440-0047	4" Left Rear Intake Elkhart Electric Valve w/Intake Relief Valve	$4,913
4440-0048	4" Right Rear Intake Elkhart Electric Valve w/Intake Relief Valve	$4,913
4440-0049	3" Left Rear Intake Akron Manual Valve	$2,178
4440-0050	3" Left Rear Intake Hale Manual Valve	$2,350
4440-0051	3" Left Rear Intake Elkhart Manual Valve	$2,366
4440-0053	4" Left Rear Intake Hale Electric Valve w/Intake Relief Valve	$5,461
4440-0054	4" Right Rear Intake Hale Electric Valve w/Intake Relief Valve	$5,461
4440-0055	3" Side Suction Top Mount Control Handle Akron Manual Valve Location: [#LOC]	$1,851
4440-0056	3" Side Suction Top Mount Control Handle Hale Manual Valve Location: [#LOC]	$2,024
4440-0057	3" Side Suction Top Mount Control Handle Elkhart Manual Valve Location: [#LOC]	$2,038
4440-0058	5" Right Rear Intake w/5" Electric Actuated Valve and Relief.	$5,469
4440-0059	5" Left Rear Intake w/5" Electric Actuated Valve and Relief.	$5,469
4440-0061	5" Front Intake w/5" Akron Electric Actuated Valve and Relief	$6,095
4440-0062	5" Front Intake w/5" Elkhart Electric Actuated Valve and Relief	$6,098
4440-0063	Intake 6" Elkhart Elk-O-Lite 9786 Piston Valve. Ship Loose.	$1,825

4440-0064	2.5" Left Intake w/3" Akron Manual Valve	$1,482
4440-0065	2.5" Left Intake w/3" Hale Manual Valve	$1,656
4440-0066	2.5" Left Intake w/3" Elkhart Manual Valve	$1,669
4440-0067	2.5" Right Intake w/3" Akron Manual Valve	$1,482
4440-0068	2.5" Right Intake w/3" Hale Manual Valve	$1,656
4440-0069	2.5" Right Intake w/3" Elkhart Manual Valve	$1,669
4440-0070	2.5" Side Suction Top Mount Control Handle w/3" Akron Manual Valve Location: [#LOC]	$1,798
4440-0071	2.5" Side Suction Top Mount Control Handle w/3" Hale Manual Valve Location: [#LOC]	$1,972
4440-0072	2.5" Side Suction Top Mount Control Handle w/3" Elkhart Manual Valve Location: [#LOC]	$1,985
4440-0074	5" Front Intake without Valve Low "S" in Tray	$3,007
4440-0075	5" Front Intake w/5" Air Actuated Valve and Relief Low "S" in Bumper Tray	$4,788
4440-0076	4" Front intake w/4" Akron electric valve and relief.	$5,435
4440-0077	2.5" Side Intake Operator Control Akron Elec Valve Drivers side.	$2,578
4440-0078	2.5" Left Intake Elkhart Unibody TM Control Manual Valve	$1,200
4440-0079	3.0" Intake Elkhart Unibody TM Control Manual Valve	$1,854
4440-0080	Front Intake, Left and Right Pump 6" Inlet and 2.5 Left Direct Tank Fill Shall be "T" together with spring check valves and plumb into the FRC auto tank fill.	$2,975
4440-0081	2.5" side suction air control Akron valve Drivers side.	$992
4440-0082	2.5" Left Intake Akron Manual Valve With Integral 30 Degree Droop	$1,032
4440-0083	2.5" Right Intake Akron Manual Valve With Integral 30 Degree Droop	$1,032
4440-0084	5" Front Intake w/5" Manual Gear Actuated Valve and Relief	$5,710
4440-0086	2.5" Side Intake Operator Control Akron Elec Valve Officer side.	$2,578
4440-0087	2.5" Intake with Akron electric valve. Controller to be located at pump operator panel. Locate intake [#LOC].	$2,589
4440-0088	2.5" Intake with Hale electric valve. Controller to be located at pump operator panel. Locate intake [#LOC].	$2,589
4440-0089	5" Front Intake w/5" Electric Actuated Valve and Relief Low "S" in Bumper Tray	$6,016
4440-0090	2.5" Side Suction Air Act Akron Valve Locate Rear of Steamer.	$1,417
4440-0091	2.5" Side Suction Top Mount Control Handle w/3" Elkhart Unibody Manual Valve Location: [#LOC]	$1,883
4440-0092	3" Left IntakeElkhart Unibody Manual Valve	$1,591
4440-0093	3" Right Intake Elkhart Unibody Manual Valve	$1,627
4440-0094	2.5" Left Intake Elkhart Unibody Manual Valve	$969
4440-0095	2.5" Right Intake Elkhart Unibody Manual Valve	$969
4440-0096	5" Front Intake w/4" Hale Electric Actuated Valve and Relief Low "S" in Bumper Tray	$5,995
4440-0097	2.5" Right Intake Elkhart Unibody Manual Valve	$969
4440-0098	5" Front Intake w/5" Akron Electric Actuated Valve and Relief	$6,095
4440-0099	2.5" Intake with Akron electric valve. Controller to be located at pump operator panel. Locate intake [#LOC].	$2,589
4440-0100	5" Right Rear Intake w/5" Electric Actuated Valve and Relief.	$5,469
4440-0101	3.0" Side Intake Operator Control Akron Elec Valve Officer side.	$2,973
4440-0102	3" Left Rear Intake Akron Electric Valve w/Intake Relief Valve	$3,068
4440-0103	5" Front Intake w/5" Elect Actuated Valve and Relief Plumbed Thru Front Bumper	$6,095
4440-0104	3.0" Side Intake Operator Control Akron Elec Valve Driver side.	$2,973
4440-0107	2.5" Side Suction Top Mount Control Handle Elkhart Manual Unibody Valve Location: [#LOC]	$1,273
4440-0112	2.5" Intake with Elkhart Unibody electric valve. Controller to be located at pump operator panel. Locate intake [#LOC].	$2,589
4445-0004	Front Intake Swivel 5" Polished Chrome	$1,834
4445-0005	Front Intake Swivel 6" Polished Chrome	$1,906
4445-0006	Intake Adapter 5" FNPT x 4.5" MNST for Front Intake	$371
4445-0007	Intake Adapter 5" FNPT x 6" MNST for Front Intake	$459
4445-0008	Valve Relief Intake - Elkhart	$548
4445-0009	Valve Relief Intake - Akron	$401
4445-0011	Valve Relief Intake - Ross 2.5"	$1,663
4445-0013	2.5" Check Valve for [#LOC] Intake	$346
4445-0014	3" Check Valve for [#LOC] Intake	$593
4445-0015	6" Check Valve for [#LOC] Steamer	$577
4445-0016	Valve Relief Intake - Hale 2.5"	$553
4445-0018	Intake relief valve outlet to be extended to the side of the truck under the runningboard. Includes tag that reads "Intake Pressure Relief Outlet - Do Not Cap".	$248
4445-0019	Intake Adapter 5" FNST x 4.5" MNST for Front Intake	$371
4445-0020	Intake Adapter 5" FNST x 6" MNST for Front Intake	$459
4445-0021	Intake Adapter 5" FNPT x 4.5" MNST for Rear Intake	$371
4445-0022	Intake Adapter 5" FNPT x 6" MNST for Rear Intake	$459
4445-0023	Recessed Front Suction Intake Swivel in Bumper 3" in tray	$844
4445-0024	Intake Adapter 5" FNPT x 5" MNST for Front Intake	$340
4445-0025	Intake Adapter 5" FNPT x 5" MNST for Rear Intake	$340
4445-0026	Front Intake Swivel 4" Polished Chrome	$1,098
4445-0027	Intake Adapter 4" FNPT x 4" MNST for Rear Intake	$328
4445-0028	Intake bleeder/drain valve to be extended to the side of the truck.	$48
4445-0030	Intake Adapter 5" FNST x 4" MNST for Front Intake	$371
4445-0037	Auto Tank Fill Valve Plumbing "T" into Right MIV'S/Rear Intake with check valves.	$573
4445-0038	Waterous Intake Pressure Relief Valve.	$1,269
4445-0039	Intake Adapter 2-1/2"MNST X 3" FNST Swivels with plug.	$210
4445-0041	Front/Rear Intake Drain Valves to be located inside of the heat pan. Valves to be a 3/4" bleeder valve with 1/4 turn control located under officer side running board.	$141
4450-0007	1" Tank Fill Akron Manual Valve	$352
4450-0008	1.5" Tank Fill Akron Manual Valve	$801
4450-0009	1.5" Tank Fill Hale Manual Valve	$928

4450-0010	2" Tank Fill Akron Manual Valve	$962
4450-0011	2.5" Tank Fill Akron Manual Valve	$1,031
4450-0012	1.5" Tank Drain Akron Manual Valve	$702
4450-0014	Direct 2.5" Water Tank Fill with Akron Valve. Location: [#LOC]	$1,168
4450-0020	2.5" Rear Direct Tank Fill. Location: [#LOC]	$1,165
4450-0021	3" Dual Tank to Pump Akron Manual Valves - Side Panel Controlled	$1,373
4450-0022	3" Tank to Pump Akron Manual Valve	$1,015
4450-0023	3" Tank to Pump Akron Air Actuated Valve	$1,420
4450-0026	5" Rear Jet Dump No Valve. Include 1-1/2" inline valve and high pressure hydraulic hose connected to the 1-1/2" internal tank piping which runs to the rear of the booster tank.	$1,949
4450-0027	5" Rear Jet Dump w/5" Manual Butterfly Valve	$3,034
4450-0028	Newton Dump with Manually Operated Valve.	$1,743
4450-0029	Newton Dump Extension. For use with a manually operated Newton Dump.	$862
4450-0030	Newton Directional Chute. Includes chute support bracket and support bolts mounted each side on trailing edge of body/beavertails.	$1,401
4450-0031	DMP NWTN RR ELEC VLV/CHT	$4,718
4450-0032	2" Tank Fill Akron Electric Valve	$2,374
4450-0034	2.5" Tank Fill "AutoFill" Automatic Tank Fill Valve Location: [#LOC]	$3,731
4450-0035	2.5" Direct Tank Fill Location: [#LOC]	$1,071
4450-0038	4" Air Tank to Pump for Cafspro Foam System	$3,845
4450-0054	2.5" Tank Fill Hale Manual Valve	$1,356
4450-0055	Hale 4" Manual Tank-to-pump	$2,900
4450-0056	3" Air Tank to Pump for Cafspro Foam System	$1,988
4450-0057	3" Tank to Pump Hale Manual Valve	$1,156
4450-0058	2.0" Tank Fill Hale Manual Valve	$1,102
4450-0059	1.5" Tank Fill Elkhart Manual Valve	$871
4450-0060	2" Tank Fill Elkhart Manual Valve	$1,033
4450-0061	2.5" Tank Fill Elkhart Manual Valve	$1,162
4450-0062	3" Tank to Pump Elkhart Manual Valve	$1,208
4450-0063	Direct 2.5" Water Tank Fill with Hale Valve. Location: [#LOC]	$1,302
4450-0064	Direct 2.5" Water Tank Fill with Elkhart Valve. Location: [#LOC]	$1,298
4450-0066	Tank-to-pump 4" Akron Air Valve	$3,092
4450-0067	Tank-to-pump 4" Arkon Electric Valve	$3,163
4450-0068	3" Tank to Pump w/3.5" Waterous Valve	$1,550
4450-0070	2.5" Tank Fill Hale Electric Valve	$2,430
4450-0071	Tank-to-pump 4" Hale Electric Valve	$3,987
4450-0072	2.5" Tank Fill Direct Akron Electric Valve Location: [#LOC]	$2,818
4450-0073	3" Tank to Pump w/3.5" Waterous Electric Valve	$2,997
4450-0074	2" Tank Fill Akron Valve Handwheel Control	$1,872
4450-0075	2" Tank Fill Elkhart Valve Handwheel	$1,916
4450-0076	2.5" Tank Fill Akron Valve Handwheel Control	$1,939
4450-0077	2.5" Tank Fill Elkhart Valve Handwheel Control	$1,983
4450-0078	3" Dual Tank to Pump Akron Air Valves	$2,259
4450-0080	3" Tank to Pump Akron Manual Valve two (2) independent Top mount controls	$1,373
4450-0082	1.5" Tank Drain Hale Manual Valve	$791
4450-0083	1.5" Tank Drain Elkhart Manual Valve	$770
4450-0084	Auto Tank Fill Valve Plumbing "T" into Left and Right Fill Thieft with check valves.	$1,253
4450-0085	3" Tank to Pump Elkhart Unibody Manual Valve	$1,284
4450-0086	2" Tank Fill Elkhart Unibody Manual Valve	$1,036
4450-0089	Tank-to-pump 3" Elkhart Electric Valve	$2,636
4450-0090	1.5" Direct Tank Fill Elkhart Unibody Manual Valve Left Side Panel	$961
4450-0091	2.5" Direct Tank Fill "AutoFill" Automatic Tank Fill Valve Location: [#LOC]	$3,868
4450-0092	3" Tank to Pump Akron Valve Hand Wheel Control.	$2,094
4450-0093	Tank-to-pump 3" Akron Electric Valve	$2,952
4450-0095	2" Tank Fill Hale Electric Valve	$2,374
4450-0096	Electric 3" Akron tank to pump. Controller located on pump control panel.	$2,848
4450-0097	Electric 3" Hale tank to pump. Controller located on pump control panel.	$2,848
4450-0098	2.5" Tank Fill Akron Electric Valve	$2,513
4450-0099	3" Tank to Pump Elkhart Unibody Air Actuated Valve	$1,430
4450-0100	Direct Rear 2.5" Water Tank Fill Driver side with 2.5"Check Stainless steel Technocheck Valve.	$957
4450-0101	Newton Dump with electrically actuated valve and manually actuated chute. Electric dump valve control to be located to the driver side rear within reach from the ground.	$4,270
4450-0102	Direct 1.0" Water Tank Fill Plumb to the fill Tower and Terminate with .75 Hose Bib. Location: driver side pump panel	$450
4450-0103	Direct Rear 2.5" Water Tank Fill with 2.5"Check Stainless steel Technocheck Valve. Location: [#LOC]	$957
4450-0104	6" Rear Gravity Dump No Valve	$2,252
4450-0105	3" Tank Fill Akron Manual Valve	$1,356
4450-0106	6" Rear Jet Dump w/6" Electric/Air Butterfly Valve with Control Switching in Cab and Driver side Rear.	$3,224
4450-0107	Direct 2.5" Water Tank Fill with 3" Akron Manual Valve. Location: [#LOC]	$1,495
4450-0108	2" Tank Fill Akron Electric Valve	$2,374
4450-0109	2.5" Tank Fill Direct Akron Electric Valve Location: [#LOC]	$2,818
4450-0110	Tank-to-pump 4" Akron Electric Valve	$3,163
4450-0112	Electric 3" Akron tank to pump. Controller located on pump control panel.	$2,848
4450-0113	5" Rear Jet Dump (No valve). For use with a center slam strip rear end.	$1,759
4450-0114	3" Tank to Pump Electric Over Air Actuated Valve	$1,506

4450-0115	Newton Dump with Electric Operated Valve.	$3,344
4450-0116	2.5" Tank Fill Elkhart Unibody Manual Valve	$1,162
4450-0117	Tank-to-pump 4" Elkhart Unibody Electric Valve	$3,163
4450-0118	Direct 2.5" Water Tank Fill with Elkhart Unibody Valve. Location: [#LOC]	$1,298
4450-0119	3" Tank To Pump Akron Manual Valve w/4" Plumbing	$1,034
4450-0121	3" Tank To Pump Akron Air Actuated Valve w/4" Plumbing	$1,420
4450-0122	3" Tank To Pump Akron Electric Actuated Valve w/4" Plumbing	$2,918
4450-0123	3" Tank Fill Direct Akron Electric Valve Control at Pump Operator Panel Valve Location: [#LOC]	$2,848
4450-0124	3" Tank To Pump Elkhart Unibody Manual Valve w/4" Plumbing	$1,085
4450-0125	3" Tank To Pump Elkhart Unibody Air Actuated Valve w/4" Plumbing	$1,502
4450-0126	Newton Dump with Manually Operated Valve. Model 1060 with 6" Extendable Handle.	$1,747
4450-0127	2.5" Tank Fill "AutoFill" Automatic Tank Fill Valve with Intelli tank level gauge located behind officer side pump panel. Location: [#LOC]	$3,731
4450-0132	3" Tank To Pump Elkhart Unibody Electric Actuated Valve w/4" Plumbing	$2,933
4450-0133	3" Tank To Pump Akron Air Actuated Valve w/4" Plumbing	$1,420
4450-0134	3" Tank To Pump Akron Manual Valve w/4" Plumbing	$1,034
4455-0004	Gasket Material around all Discharges, Intakes and Handle Slots on Pump Panel to hold in heat of Module Plumbing	$852
4460-0000	Air Outlet Valve Location: [#LOC]	$233
4460-0001	Air Blowout For: [#LOC]	$219
4460-0002	Hose Reel Blow-out Primary	$222
4460-0004	Tags Mechanically Fastened with Screws	$363
4460-0005	Fire Shop Bezel Chrome - Standard 2.5" Gauge	$33
4460-0006	Radiator Fill Valve on Pump Panel	$257
4460-0007	Air Outlet Valve w/25' Hose Location: [#LOC]	$261
4460-0008	Air Outlet Valve to operate off of CAFS System Compressor Location: [#LOC]	$322
4460-0009	Pump Panel Tags - Special Color (Must Specify)	$276
4460-0010	Pump Panel Tags - Special Label (Must Specify)	$236
4460-0011	OK To Pump Light - Pump Panel Mounted - Green .75" Light. Located rearward of pressure governor.	$60
4460-0013	Air Outlet Valve. Plumbed from the reservoir tank. Includes quarter turn valve. Location: [#LOC]	$276
4460-0017	Class 1 Color Coded Bezel Chrome - 2.5" Gauge	$21
4460-0018	Class 1 Color Coded Bezel Chrome - 3.5" Gauge	$24
4460-0022	Stainless steel plates for all discharges and intakes behind the pump panel access doors, each side. Stainless steel plates to be mounted on the valve with rubber gasket to seal opening.	$982
4460-0023	Span Color Coded Bezel - 2.5" Gauge	$6
4460-0024	Span Color Coded Bezel - 3.5" Gauge	$6
4460-0025	Cut-out on officer side pump panel with expended metal. Cut-out to be approx. 14" wide x 6" high to provide sight to cord reel in pump house. Cut-out to be located above cord reel rollers on pump panel.	$133
4460-0026	CAFS Air Outlet Valve Recess Driver side Pump Panel wiyh door.	$326
4460-0027	Diagramtic vinyl rear mount pump panel labeling of discharges and/or preconnects. Includes rear panel (with hosebed deck gun) and front discharge layouts (two (2) views- No top view).	$1,685
4460-0028	Tags Mechanically Fastened with Screws with exception of the tags on the push/pull rods.	$363
4460-0029	Vision Mark Tags Shall Be Install IPOS Plastic Tag With Metal Inserts	$614
4460-0030	L1 forward body compartment pump panel mount. Includes structural build out for panel mount.	$1,499
4460-0031	Attach Escutchion Plates with Thunb Latch on Officer Side.	$160
4460-0032	Push/Pull Rod Extrusion at pump panel to be thru bolted with nuts IPOS nut cert.	$81
4460-0033	CAFS Air outlet .75 valve with Handle and Quick Disconnect. Location: [#LOC]	$363
4465-0001	Fire Commander pressure governor. Includes engine gauges. Detroit S60 only.	$4,068
4465-0003	FRC In-Control pressure governor. Includes engine and master pump gauges.	$4,817
4465-0005	Class1 Captain pressure governor.	$2,549
4465-0007	Class1 Command Master pressure governor. Includes pump intake pressure and discharge pressure, throttle, relief, tank level(s), water, oil, volt and tachometer.	$4,667
4465-0008	FRC PumpBoss Pressure Governor. Includes engine gauges.	$2,368
4465-0009	FRC Pro-S Pressure Governor	$2,500
4465-0010	FRC In-Control pressure governor TGA200. Includes engine transmission and master pump gauges.	$4,870
4465-0011	Class1 TPG pressure governor. Includes , throttle, relief, water, oil, volt and tachometer.	$2,248
4465-0012	Fire Commander II pressure governor. Includes engine gauges, Pump Ditigal Master Gauges. Detroit S60 only.	$4,660
4465-0013	FRC In-Control pressure governor. Includes engine and master pump gauges.The discharge pressure display shall show pressures from 0 to 4000 kPa. The intake pressure display shall show pressures from -100 to 4000 kPa.	$4,817
4465-0015	FRC In-Control pressure governor TGA300. Includes engine, transmission, and master pump gauges.	$4,817
4465-0017	FRC PumpBoss Pressure Governor PBA400. Includes engine gauges.	$2,368
4465-0018	FRC In-Control pressure governor TGA400. Includes engine, transmission, and master pump gauges.	$4,817
4475-0000	Pump certification 750-2250 GPM	$2,259
5000	**ELECTRICAL SYSTEMS**	
5010-0002	Multiplex electrical system for pumper / tanker / rescue.	$3,051
5010-0003	Multiplex modem kit. Includes cable, modem, and adapter harness.	$799
5010-0004	Multiplex Data Logger	$566
5010-0010	Multiplex cab/non-multiplex body electrical system for pumper / tanker / rescue.	$3,051
5010-0016	Multiplex electrical system for rear mount pumper.	$5,225
5050-0000	Vanner Bravo 1800 watt inverter. For use with (2) quartz lights. Includes on/off switch in cab. Inverter to be mounted in a body compartment as close to the chassis batteries as practical (20' max cable length).	$2,484
5050-0001	Vanner 2600 watt inverter. For use with quartz lights. Includes on/off switch in cab. Inverter to be mounted in cab below rear wall bench seat.	$3,838

5050-0002	Vanner 2600 watt inverter. For use with (2) quartz lights. Includes on/off switch in L1 compartment, next to breaker box. Inverter to be mounted in a L1 up high (20' max cable length).	$3,838
5050-0003	Vanner 2600 watt inverter. For use with (2) quartz lights. Includes on/off switch in driver overhead console. Inverter to be mounted in L3 up high forward (20' max cable length).	$3,838
5100-0000	Foot Switch to control air horns located [#LOC]	$102
5100-0001	Switch circuit three way. Includes (1) additional switch. An additional switch required for more than two locations. Location: [#LOC].	$143
5100-0002	Momentary switch with 6' pendant for cab tilt. Yellow weatherproof push button at end of coiled cord. Location of switch plug-in: [#LOC]	$324
5100-0006	Foot Switch to control Q2B located [#LOC]	$102
5100-0007	Foot Switch to control electronic siren located [#LOC]	$102
5100-0009	Audible door ajar alarm wired thru door ajar light.	$51
5100-0010	Additional push button hose reel switch. Location: [#LOC]	$160
5100-0011	Switch 12V for 110-240V (EA). Location: [#LOC].	$371
5100-0014	Air horns to be interlocked through the master warning switch.	$86
5100-0015	Back-up alarm override momentary switch located at the cab dash. The switch will allow for overriding the back-up alarm and reset after transmission is shifted again.	$48
5100-0017	Wire rear amber through ignition switch.	$67
5100-0018	Primary Warning switch to activate all warning lights and siren controls to be located driver's side overhead console.	$152
5100-0019	Additional amber warning light override momentary switch located at the cab warning light switch panel. The switch will allow for overriding the rear additional amber warning lights and reset after ignition is turned off.	$279
5100-0020	Switch additional 12 volt/15amp toggle. Location and function: Under driver side cab dash for master battery override.	$174
5100-0021	Opticom switch wired through upper level warning switch.	$65
5100-0022	Push-button hose reel switch. Location: [#LOC]	$160
5100-0023	Provide a single switch on the cab dash (within reach of the driver and officer) for locking and unlocking of all roll-up doors. The switch is to be red. Label RUD Lock.	$268
5100-0029	Stirrup style hose reel switch. Location: [#LOC]	$160
5100-0030	Additional stirrup stlye hose reel switch. Location: [#LOC]	$160
5100-0036	Additional programming instructions: [#LOC].	$106
5100-0038	Hose Reel rewind switch located in rubrail.	$81
5100-0039	Foot switch(es) mounted on a 45 degree bracket.	$69
5100-0040	Micro switch with 2.75'' lever upgrade. Location: (2) hosebed cover, (1) ladder rack.	$67
5100-0042	Ramsey control with 3' cord for cab tilt. Red/Black weatherproof push buttons at end of cord. Location of switch plug-in: [#LOC]	$324
5100-0044	Rear cab heater switch. Function and location: [#LOC].	$174
5100-0045	Thermostatic controls for pump compt heaters. Thermostat set at freezing temp.	$219
5100-0046	Cut-off switch for Q2B main power. Switch to be accessible from driver's seat.	$237
5100-0047	Switch household 110V w/ weaterproof cover. Location and function: cab mounted next to air compressor for 120V air compressor	$174
5100-0048	Magnetic door ajar switches IPO std for all body compt doors.	$631
5100-0049	Ramsey control with 8' cord for cab tilt. Red/Black weatherproof push buttons at end of cord. Location of switch plug-in: [#LOC].	$324
5100-0050	Push button testswitch for tank level gauge, push button wired "hot" to batteries to allow checking tank level in fire station without having to power up truck electrical system. Located on operator pump panel.	$302
5100-0056	Hose deployment switch in front bumper tray. Includes hinged plate on bottom of bumper tray with switch on floor and indicator light on pump panel. Requires tray without slats. Location: [#LOC].	$512
5110-0004	Flasher Alternating for Headlights	$295
5110-0005	Prewire for trailer hitch. Includes stop, left turn, right turn, marker and ground wires. Does not include connector.	$209
5110-0007	Audible indicator in cab with rear button. The rear button will be located on the driver's side at the rear behind the handrail (if equipped).	$303
5110-0008	Audible indicator in cab with rear buttons. The rear buttons will be located, one each side at the rear, behind the handrail (if equipped).	$333
5110-0009	Clock Digital 12/24 Waterproof mounted in cab officer's overhead dash.	$552
5110-0010	Receptacle 12V 175A portable winch. Located at rear near trailer hitch.	$310
5110-0011	Vehicle Information Control Center for E-One Multiplexed trucks located on Driver's Side.	$5,253
5110-0012	Vehicle Information Control Center for E-One Multiplexed trucks located on Officer's Side.	$5,253
5110-0013	Vehicle Information Control Center for E-One Multiplexed trucks located on Driver's Side. Display Only, No computer.	$2,231
5110-0014	Vehicle Information Control Center for E-One Multiplexed trucks located on Officer's Side. Display Only, No computer.	$2,231
5110-0015	Vehicle Information Control Center for E-One Multiplexed trucks located at center of engine cover mounted on swivel bracket.	$5,582
5110-0017	Back up alarm 97 dB(A).	$88
5110-0018	12 volt 12 gauge constant hot lead (24'' long) with ground wire. Location: [#LOC].	$69
5110-0024	Back up alarm Grote 107 dB(A).	$231
5110-0025	Back up horn system. Includes 12v independent horn (NAPA 730-1047) below officer's side dash, 12v independent horn (NAPA 730-1047) at rear of body and Ramsey control switch with 25' tether at rear of body.	$727
5110-0026	12 volt 12 gauge wired through ignition lead (24'' long) with ground wire. Location: [#LOC].	$69
5110-0027	Powered equipment rack alarm. To activate while rack is in motion.	$59
5110-0028	Code3 model 700 flasher for alternating headlights.	$290
5110-0030	Flasher Alternating for Headlights Whelen model UHF2150A.	$309

5110-0031	12 volt 12 gauge wired to chassis reverse (24" long) with ground wire. Location: back wall of rear bench seat riser.	$69
5110-0034	4 Pin trailer wiring flat connector. Includes matching plug. Requires trailer wiring pre-wire option.	$81
5110-0037	Additional wiring instructions: [#LOC].	$320
5110-0040	Indicator light. Color: [#COL]. Location and function: [#LOC].	$100
5110-0041	7 Pin trailer wiring connector. Requires trailer wiring pre-wire option.	$108
5110-0042	Trailer wiring and connector for 2009 NFPA 1901 Type I, Type II or Type III trailer. Includes model 12-907 connector on body. Stop/turn/tail circuits shall be connected, remaining wires to be coiled up for future use. Trailer end 12-906 shipped loose.	$404
5110-0043	Back up alarm Federal Reactor Model 210350 self adjusting.	$156
5110-0044	ABS cover for multiplex PDMs' located in the pump module.	$82
5110-0046	4 Pin trailer wiring heavy duty round connector. Includes matching plug. Requires trailer wiring pre-wire option.	$89
5110-0052	12V power distribution module. Includes (6) battery hot and (6) switched hot circuits. 100 amps max (IATS). Location: [#LOC]	$268
5110-0057	7 Pin trailer wiring connector, SAE J5606. Requires trailer wiring pre-wire option. This will include the Male and Female connections.	$164
5110-0060	12 volt 4 gauge constant hot lead (24" long) with ground wire. Location: [#LOC].	$211
5110-0065	Lighted bumper guide (PR). Bores model 848211 located (1) each side of front bumper extension.	$357
5110-0066	Switches in cab (2) for controlling (2) TNT DT 4.0 diesel engine hydraulic power units. Switches to be kill/run/start with indicator light. Run wiring into dunnage area with extra length for dealer installation.	$924
5110-0067	Back up alarm Preco 97 dB(A) warble tone.	$235
5130-0001	Cord reel electric with 200' of 10/3 black cable. Locate [#LOC]	$1,888
5130-0002	Cord reel electric with 200' of 10/3 yellow cable. Location(s): [#LOC]	$2,131
5130-0003	Cord reel electric with 200' of 10/4 black cable. Location: [#LOC]	$2,125
5130-0004	Cord reel electric with 200' of 10/4 yellow cable. Location [#LOC]	$2,757
5130-0006	Cord reel rollers mounted on reel in [#LOC]	$307
5130-0007	Cord connector. Daniel Woodhead 3 wire NEMA 5-15 straight blade female located on cord for reel in [#LOC]	$70
5130-0008	Cord connector. Daniel Woodhead 3 wire NEMA L5-15 twist lock female located on cord for reel in [#LOC]	$72
5130-0009	Cord connector. Daniel Woodhead 3 wire NEMA L5-20 twist lock female located on cord for reel in [#LOC]	$99
5130-0010	Cord connector. Daniel Woodhead 4 wire NEMA L14-20 twist lock female located on cord for reel in [#LOC]	$99
5130-0011	Cord connector. Daniel Woodhead 3 wire NEMA L6-20 twist lock female located on cord for reel in [#LOC]	$99
5130-0012	Junction box Circle-D with four (4) 3-wire Nema L5-15 110Volt 15 Amp twist lock receptacles. Located on cord for reel in [#LOC]	$650
5130-0013	Junction box Circle-D with four (4) 3-wire Nema L5-20 110Volt 20 Amp twist lock receptacles. Located on cord for reel in [#LOC]	$650
5130-0014	Circle D wall/floor mounting box. Locate box for use with reel in or on [#LOC]	$126
5130-0015	Junction box Circle-D with two (2) 15 amp straight blade and two (2) 20 amp twist lock receptacles. Located on cord for reel in [#LOC]	$820
5130-0016	Junction box Circle-D with all twist lock, 2-120V and 2-240V outlets. Located on cord for reel in [#LOC]	$804
5130-0017	Junction box Woodhead with four (4) wire NEMA L5-15 110 Volt 15 Amp twist lock receptacles. Located on cord for reel in [#LOC]	$1,292
5130-0018	Junction box Woodhead with four (4) wire NEMA L5-20 110 Volt 20 Amp twist lock receptacles. Located on cord for reel in [#LOC]	$1,033
5130-0022	Cord reel rollers mounted thru panel. Location(s): [#LOC]	$307
5130-0024	Electric cord reel rewind switch. Switch located [#LOC].	$102
5130-0026	Cord connector. Fire Power 3 wire 20A/110V female located on cord for reel in [#LOC]	$520
5130-0027	Cord connector. Duraline 4 wire 20A/220V female located on cord for reel in [#LOC]	$136
5130-0028	Cord reel rollers mounted on reel.	$307
5130-0030	Junction box Circle-D with one (1) straight blade and three (3) twist lock receptacles. Located on cord for reel in [#LOC]	$820
5130-0031	Cord reel electric/manual back-up with 200' of 10/3 black cable. Crank handle mounted next to reel. Locate [#LOC]	$2,268
5130-0032	Cord reel electric with 150' of 10/4 yellow cable. Location [#LOC]	$2,757
5130-0033	Junction box Circle-D with four (4) 3-wire Nema 5-15 110Volt 15 Amp straight blade receptacles. Located on cord for reel in [#LOC]	$650
5130-0034	Cord reel Akron electric with 200' of 10/3 yellow cable. Location(s): [#LOC]	$2,035
5130-0035	Junction box Circle-D with (3) L5-15 and (1) L5-20 110Volt twist lock receptacles. Located on cord for reel in [#LOC].	$650
5130-0037	Cord reel Akron electric with 200' of 10/4 yellow cable. Location(s): [#LOC]	$2,662
5130-0038	Junction box Circle-D with (2) L5-20 twist lock and (2) 5-20 110Volt straight blade duplex receptacles. Located on cord for reel in [#LOC].	$650
5130-0039	Roller support bracket up high at compt opening for reel in [#LOC].	$232
5130-0040	Hannay PWM (Pulse Width Modulator) control for reel. Mounted next to switch for cord reel in [#LOC].	$578
5130-0041	Cord reel rollers bracket mounted on top of [#LOC]	$307
5130-0042	Junction box Circle-D with four (4) 3-wire Nema 5-20 110Volt 20 Amp duplex receptacles. Located on cord for reel in [#LOC].	$719
5130-0044	Junction box Akron with (2) 5-20 125v 20 Amp duplex recepts and (2) L5-20 125v 20 Amp twist lock recepts. Located on cord for reel in [#LOC].	$510
5130-0045	Akron model EJB-VMT-TP mounting box. Locate box for use with reel in or on [#LOC].	$248
5130-0046	Junction box Circle-D with one (1) 5-20 straight blade and three (3) L5-20 twist lock receptacles. Box wired as 240v with individual circuit breakers on box. Located on cord for reel in [#LOC].	$820
5130-0048	Junction box Circle-D with (2) NEMA 5-20 120V GFCI duplex and (2) NEMA L6-20 220V twist lock receptacles. Located on cord for reel in [#LOC].	$820
5130-0049	Cord reel electric for 200' of 10/3 cable. Cable not included. Location(s): [#LOC]	$1,906
5130-0054	Cord reel electric with 200' of 8/3 black cable. Locate [#LOC]	$3,233

5130-0055	Cord reel rollers mounted on support bracket. Location(s): [#LOC]	$307
5130-0056	Junction box Woodhead with (3) NEMA L5-15 110 Volt 15 Amp twist lock receptacles and (1) NEMA 5-20 110 Volt 20 Amp household receptacle. Located on cord for reel in [#LOC].	$1,292
5130-0057	Mounting box for Woodhead junction box. Locate box for use with reel in or on [#LOC].	$232
5130-0059	Junction box Circle-D with four (4) FirePower FP11 110Volt 20 Amp receptacles. Located on cord for reel in [#LOC].	$1,059
5150-0003	Weldon auxiliary turn signal model 9186-8560 (PR). Location: [#LOC]	$181
5150-0007	Whelen 600 series LED vertical mount taillights. Includes LED stop/tail, arrow turn and halogen backup lights with vertical Cast 3 housing and weatherproof connectors.	$1,154
5150-0010	Whelen 600 series LED horizontal mount taillights. Includes LED stop/tail, turn and halogen backup lights. Available on G067, L193 and Q100/114 only. With weatherproof connectors.	$1,270
5150-0011	Whelen 600 series LED vertical mount taillights. Includes LED stop, tail, turn and halogen backup lights with vertical Cast 3 housing and weatherproof connectors.	$1,243
5150-0012	Whelen 600 series LED vertical mount taillights. Includes LED stop/tail, turn and halogen backup lights with vertical Cast 4 housing and weatherproof connectors.	$1,326
5150-0014	Whelen 600 series vertical mount taillights. Includes incandescent stop/tail, arrow turn and halogen backup lights with vertical Cast 3 housing and weatherproof connectors.	$501
5150-0015	Whelen 600 series vertical mount taillights. Includes incandescent stop/tail, arrow turn and halogen backup lights with vertical Cast 4 housing and weatherproof connectors.	$641
5150-0017	License plate light LED with chrome housing located at the rear of the body.	$118
5150-0018	Marker lights additional amber LED Trucklite Model 21 (PR). Location: [#LOC]	$152
5150-0019	Marker lights addtional red LED Trucklite Model 21 (PR). Location: [#LOC]	$152
5150-0020	Weldon Model 1010 LED / incandescent taillights. Includes red LED stop/tail/turn and clear incandescent backup.	$332
5150-0022	Marker light LED body package. Commercial pumper bodies only.	$704
5150-0023	Weldon Model 1010 LED / incandescent taillights. Includes red LED stop/tail, amber LED turn and clear incandescent backup.	$483
5150-0025	Marker light LED body/cab package. E-One custom cab and pumper or tanker body only.	$1,181
5150-0032	Bracket license plate	$34
5150-0036	Trucklite LED taillights. Includes 4" red LED stop/tail, amber LED turn and clear LED backup.	$744
5150-0037	Zico backing light (PR) with white pained housing model #ZQL-RV-H7614. Location: [#LOC].	$349
5150-0039	Marker lights Britax amber/red rubber housed mounted on the rear body corners angled down.	$260
5150-0042	Federal Signal LED taillights. Includes 4" diameter red LED stop/tail, amber turn and LED clear backup.	$506
5150-0050	Zico backing light (PR) with polished stainless steel housing model #ZQL-SS-H7614. Location: [#LOC].	$538
5150-0052	Code 3 65STK4 vertical mount taillights. Includes red LED stop/tail, amber LED turn and white LED backup lights.	$1,800
5150-0053	Code 3 65PKG vertical mount taillights. Includes red LED stop/tail, amber LED turn and white LED backup lights.	$1,465
5150-0054	Whelen 600 series LED vertical mount taillights. Includes LED stop/tail, turn and backup lights with vertical Cast 4 housing and weatherproof connectors.	$1,697
5150-0056	Whelen 600 series LED vertical mount taillights. Includes LED stop/tail, arrow turn and backup lights with vertical Cast 3 housing and weatherproof connectors.	$1,843
5150-0059	Federal Signal QuadraFlare LED vertical mount taillights. Includes LED stop/tail, arrow turn and backup lights with vertical Cast 3 housing and weatherproof connectors.	$1,005
5150-0060	Federal Signal QuadraFlare LED vertical mount taillights. Includes LED stop/tail, turn and backup lights with vertical Cast 3 housing and weatherproof connectors.	$1,099
5150-0063	Double chrome trim ring for Weldon 1010 tail lights (PR).	$242
5150-0064	Whelen PSR00XRR series LED red third brake light. Light mounted above recessed traffic advisor.	$291
5150-0066	Marker light LED body/cab package. E-One custom cab and pumper or tanker body only. Model 10 front marker lights mounted on top of cab.	$1,392
5150-0068	Marker lights Britax LED amber/red rubber housed mounted on the rear body corners angled down.	$356
5150-0071	Light Whelen model PSR00XRR LED (EA) red 3rd brake light. Location: [#LOC].	$172
5150-0072	Marker light LED body/cab package. E-One custom cab and pumper or tanker body only. Includes: Trucklite Model 10 front marker lights mounted on top of cab, Trucklite rear upper body and Whelen lower cab/body marker lights.	$1,807
5150-0073	Marker lights additional red LED Whelen Model 50R00MRR (PR). Location: [#LOC]	$220
5150-0074	Marker lights additional amber LED Whelen Model 50A00MAR (PR). Location: [#LOC]	$220
5150-0075	Whelen 600 series LED vertical mount taillights. Includes LED stop/tail, arrow turn and backup lights with individual chrome flanges and weatherproof connectors.	$2,492
5150-0076	Whelen 700 LED auxiliary chevron turn signal (PR) with 15 degree castings. Location: [#LOC]	$651
5150-0077	Whelen 900 series LED taillights. Includes LED stop/tail, arrow turn and backup lights with weatherproof connectors.	$4,495
5150-0078	Truck-Lite model #35720 guards for front LED clearance lights on cab.	$81
5150-0079	Spring mounted plate for rear DOT lighting. Locate centered below rear of body.	$327
5150-0080	Weldon auxiliary turn signal model 9186-8580 LED (PR). Location: [#LOC]	$247
5150-0081	Light Whelen 500 model 5SR00XRR red LED 3rd brake light (ea). Location: [#LOC].	$193
5150-0082	Whelen 600 series LED vertical mount taillights. Includes LED stop/tail, arrow turn and stop/tail in vertical Cast 3 housing with 900 series halogen backup lights down low and weatherproof connectors.	$1,533
5150-0084	Weldon LED vertical mount taillights. Includes LED stop, tail, sequential turn and halogen backup lights with vertical 3 housing and weatherproof connectors.	$1,042
5150-0087	Weldon LED vertical mount taillights. Includes LED stop, tail, sequential turn and halogen backup lights with vertical 4 housing and weatherproof connectors.	$1,042
5200-0000	Breaker box 8 place single phase. Includes main breaker. Note: Main breaker occupies 2 places leaving 6 available. Locate [#LOC].	$755

5200-0001	Breaker box 12 place single phase. Includes main breaker. Note: If gen is 6KW or less, main will occupy 2 places leaving 10 available. Locate [#LOC].	$789
5200-0002	Breaker Box 20 Place Single Phase. Includes main breaker. Locate [#LOC].	$804
5200-0003	Breaker Box 2 Place Single Phase (70A 110/220V). Location [#LOC].	$334
5200-0008	Breaker Box 16 Place Single Phase. Includes main breaker. Locate [#LOC]	$793
5200-0009	Breaker box 8 place single phase; no main breaker. For use with multiple options wired through shoreline power with 30A or larger inlet recept. Locate adjacent to main breaker box.	$588
5250-0005	Generator Onan 6KW hydraulic. Includes generator control / PTO engage switch and a gauge panel located adjacent to breaker box. Generator location: [#LOC].	$17,013
5250-0006	Generator Onan 8KW hydraulic. Includes generator control / PTO engage switch and a gauge panel located adjacent to breaker box. Generator location: [#LOC].	$19,512
5250-0007	Generator Onan 10KW hydraulic. Includes generator control / PTO engage switch and a gauge panel located adjacent to breaker box. Generator location: [#LOC].	$20,363
5250-0012	Generator Onan 15KW hydraulic. Includes generator control / PTO engage switch and a gauge panel located adjacent to breaker box. Generator location: [#LOC].	$27,384
5250-0013	Generator Onan 20KW hydraulic. Includes generator control / PTO engage switch and a gauge panel located adjacent to breaker box. Generator location: [#LOC].	$32,082
5250-0017	Generator Honda EM5000SXK with 4.5KW continuous output. Generator location: [#LOC].	$5,486
5250-0026	Generator Smart Power 10KW hydraulic model ER110. Includes generator control / PTO engage switch and a gauge panel located adjacent to breaker box. Generator location: [#LOC]	$20,115
5250-0036	Generator Smart Power 6KW hydraulic model HR-6 (with top mount cooler). Includes generator control / PTO engage switch and a gauge panel located adjacent to breaker box. Generator location:[#LOC]	$14,736
5250-0037	Generator Smart Power 8KW hydraulic model HR-8 (with top mount cooler). Includes generator control / PTO engage switch and a gauge panel located adjacent to breaker box. Generator location:[#LOC].	$16,654
5250-0038	Generator Smart Power 10KW hydraulic model HR-110 (with top mount cooler). Includes generator control / PTO engage switch and a gauge panel located adjacent to breaker box. Generator location: [#LOC].	$18,050
5250-0039	Generator Harrison 10KW MCR hydraulic. Includes generator control / PTO engage switch and a gauge panel located adjacent to breaker box. Generator location: [#LOC].	$21,992
5250-0040	Generator Harrison 6KW MCR hydraulic. Includes generator control / PTO engage switch and a gauge panel located adjacent to breaker box. Generator location: [#LOC].	$18,640
5250-0041	Generator Honda EM3800SX with 3.3KW continuous output. Generator location: [#LOC].	$4,970
5250-0043	Dealer installed generator. Option includes space only. Dealer responsible for NFPA required 3rd party generator testing.	$265
5250-0045	Generator Harrison 30KW MPC hydraulic. Includes generator control / PTO engage switch and a gauge panel located adjacent to breaker box. Generator location: [#LOC].	$35,293
5250-0047	Generator Smart Power 15KW hydraulic model HR-15 (with top mount cooler). Includes generator control / PTO engage switch and a gauge panel located adjacent to breaker box. Generator location: [#LOC]	$21,045
5250-0050	Generator Smart Power 20KW hydraulic model HR-20 (with top mount cooler). Includes generator control / PTO engage switch and a gauge panel located adjacent to breaker box. Generator location: [#LOC]	$22,602
5250-0051	Locate generator gauge panel on pump operators panel ipo next to breaker box.	$106
5250-0055	Generator Smart Power 8KW hydraulic model ER8. Includes generator control / PTO engage switch and a gauge panel located adjacent to breaker box. Generator location: [#LOC]	$16,654
5250-0075	Guarded PTO engage toggle switch. Located driver side cab switch panel. For use on Typhoon X and CIIX cabs only.	$174
5255-0001	3rd party generator test with pump.	$79
5260-0000	Generator air deflector Onan hydraulic. When generator is compartment mounted or mounted in a pan on an aerial body, engineering is to specify updraft or downdraft.	$394
5260-0002	Remote control starting kit for Honda EM3800SX, EM5000SX and EM6500SX generators. Locate [#LOC].	$642
5260-0004	Generator prewire for dealer supplied and installed 5 KW portable generator (Honda or other with equivalent dimensions). Includes 12volt wiring and cable between breaker box. Prewire to [#LOC].	$240
5260-0006	Compartment door(s) of compartment mounted generator to have interlock.	$180
5260-0008	Generator prewire for dealer supplied and installed 6.5KW portable generator (Honda or other with equivalent dimensions). Includes 12volt wiring and cable between breaker box. Prewire to [#LOC].	$294
5260-0009	Generator oil drain valve with tube extending below driver side pump panel.	$187
5260-0013	Locate generator gauge panel to the outboard side of the breaker box.	$106
5260-0014	Oil drain valve with tube extending below officer side pump panel.	$187
5260-0015	Generator prewire for dealer supplied and installed 2.5 KW portable generator. Includes 12volt wiring and cable between breaker box with #66W47 posi-lock Woodhead recpt. Prewire to R1 forward wall up high.	$398
5260-0017	Compartment door(s) of compartment mounted compressor to have interlock.	$180
5260-0019	The exhaust of the gas generator to be routed downward and to the exit to below the unit to the officer side of the unit.	$238
5260-0020	Compartment door(s) of compartment mounted electric dump valve to have interlock.	$180
5260-0021	Oil drain valve with tube extending below driver side pump panel.	$187
5300-0000	Light bar Code 3 model XL5100 (PR) 22" Long. All red lens. Location: [#LOC]	$1,099
5300-0003	Light bar Code 3 model 556A3 56" long with all red lenses. Location: Centered on the front cab roof	$1,514
5300-0004	Light bar Code 3 model 718A1 (PR) 18" Long. Red Upper / Clear Lower lens. Location: [#LOC]	$1,239
5300-0011	Light bar Federal Signal ViewPoint. Two (2) 20" light bars LED 3 pod. Lenses shall be all red. Location: [#LOC]	$2,341
5300-0012	Light bar Federal Signal ViewPoint. Two (2) 20" light bars LED 3 pod. Lenses shall be Red/White/Red - Red/White/Red. Location: [#LOC]	$2,595
5300-0013	Light bar Federal Signal ViewPoint. Two (2) 26.5" 4 pod LED light bars. Lenses to be all red. Location: [#LOC]	$2,776
5300-0014	Light bar Federal Signal ViewPoint. Two (2) 26.5" 4 pod LED light bars. Lenses to be R/R/W/R R/W/R/R. Location: [#LOC]	$3,089
5300-0017	Light bar Federal Signal Jet Stream 48" LED with R/W/R lenses, red diodes and single traffic clearing light. Location: Centered on the front cab roof	$2,250

5300-0020	Light bar Federal Signal JetStream JLX54HH-00011 54" LED. Red Solaris reflectors with red domes each side and (2) center clear TCL lights. Location: Centered on the front cab roof.	$2,502
5300-0021	Light bar Federal Signal JetStream 60" LED. Red Solaris reflectors with clear domes. NFPA Compliant, does not require 2 addl side facing bars. Location: Centered on the front cab roof	$2,378
5300-0024	Light bar Federal Signal Aerodynic 25RQL-Fast 52" with red/clear lens. Location: Centered on the front cab roof	$1,378
5300-0026	Light bar Federal Signal Aerodynic ADL5202 52" with red/clear/red lens. Location: Centered on the front cab roof	$1,303
5300-0028	Light bar Federal Signal Aerodynic ADX5271 52" with 10 red Solaris LED reflectors. Location: Centered on the front cab roof	$2,642
5300-0029	Light bar Federal Signal AeroDynic ADX7201 72" with 8 red Solaris LED reflectors. Location: Centered on the front cab roof	$2,766
5300-0030	Light bar Federal Signal Aerodynic AH1LC 72" with red/clear lens. Location: Centered on the front cab roof	$1,663
5300-0031	Light bar Federal Signal Aerodynic AH2LC 72" with red/clear lens. Location: Centered on the front cab roof	$1,728
5300-0035	Light bar Federal Signal Viewpoint. Two (2) 20" 3 pod light bars. Location: [#LOC]	$1,348
5300-0036	Light bar Federal Signal Viewpoint. Two (2) 26.5" 4-pod light bars. Location: [#LOC]	$1,687
5300-0044	Light bar Federal Signal Vector VC6001. Location: Centered on the front cab roof	$1,949
5300-0053	Light bar Whelen Freedom model FN66QLED 66" with MKEZ7 mounts. All LED light bar without rear facing LEDs. Location: Centered on the front cab roof	$3,407
5300-0082	Whelen Mini-Freedom LED side facing light bars (PR) model FT8RRRRF 24" with MKEZ7 mounts. Location: [#LOC]. Lense colors: Clear.	$3,785
5300-0085	Federal Vector SL LED Lightbar Model 545NFPA60L2 60". Includes (12) six LED red Solaris reflectors and (4) six LED white Solaris LED reflectors.	$3,501
5300-0086	Light bar Code 3 MX model 758A1. Upper deck contains (4) rotators (2 ea side) with red lenses and (2) clear oscilasers. Lower deck contains (2) frt red halogen flashers outboard, intersection sweeps and clear lenses. Loc: Centered on the frt cab roof.	$1,689
5300-0087	Light bar Code 3 model XL5100 22" Long. All red lens. Location: Centered on the front cab roof.	$551
5300-0088	Light bar Whelen Freedom model FN55VLED 55" LED with MKEZ7 mounts. N/A with Vista roofs with front facing windows. Location: Centered on the front cab roof	$3,087
5300-0089	Light bar Code 3 MX model 769A1. Upper deck contains 9 rotators w/ red lenses. Lower deck contains intersection sweeps w/clear lenses. Location: Centered on the front cab roof.	$1,749
5300-0091	Light bar Code 3 Excalibur model X58A. Upper deck contains (4) rotators (two ea side) with red lenses and (2) white oscilasers with clear lenses. Lower deck contains (4) takedown lights and two alley lights. Location: Centered on the front cab roof.	$1,919
5300-0092	Light bar Whelen Freedom model FN55QLED 55" LED with takedown lights and MKEZ7 mounts. Location: Centered on the front cab roof.	$3,343
5300-0093	Light bar Whelen Freedom model FN72VLED 72" LED with Opticom and MKEZ7 mounts. N/A INTL Chassis or Vista roofs with front facing windows. Location: Centered on the front cab roof.	$5,847
5300-0095	Light bar Code 3 MX model 769 with R/C/C/C/B lenses. Upper deck contains 9 rotators. Lower deck contains intersection sweeps w/clear lenses. Location: Centered on the front cab roof.	$1,749
5300-0096	Light bar Code 3 Javelin LED model JX67A. Location: Centered on the front cab roof.	$5,877
5300-0097	Light bars Federal Signal Vector/ViewPoint. One (1) center 21" 3 pod and two (2) side 26.5" 4 pod LED light bars. Lenses to be R/R/W/R R/R/R R/W/R/R. Location: "V" centered on the front cab roof.	$3,969
5300-0098	Light bar Federal Signal Vector VC4801. Location: Centered on the front cab roof	$1,653
5300-0101	Light bar Federal Signal Aerodynic ADL5202 52" with blue lenses. Location: Centered on the front cab roof.	$1,303
5300-0105	Light bar Code 3 model 718A1 (PR) 18" Long. Red upper/clear lower lens driver side and blue upper/clear lower officer side. Location: [#LOC]	$1,073
5300-0106	Light bar Code 3 MX model 769 with B/B/C/R/R upper lenses clear lower lenses. Upper deck contains (8) rotators; (4) each side and alley lights. Lower deck contains intersection sweeps, (4) LED warning; (2) blue driver and (2) red officer. Includes pre-wire for opticom in the center of the upper deck. Location: Centered on the front cab roof. Requires 5300-0105.	$3,141
5300-0107	Light bar Code 3 MX7400-ALRC-777 58" long. Location: Centered on the front cab roof. Includes (1) steady burn red light for California DOT.	$4,547
5300-0108	Light bar Code 3 model MX7100-ALRC-724 (PR) 18" Long. Location: At angle behind main light bar with front corners of bars even with outside edge of main bar.	$1,101
5300-0110	Light bar Whelen Freedom model FN72QLED 72" LED with MK8H high mounts. Includes (12) red LED and (2) white LED. N/A INTL Chassis. Location: Centered on the front cab roof.	$4,906
5300-0111	Whelen Mini-Freedom LED side facing light bars (PR) model FT8RRRRF 24" with MK8H high mounts. Location: [#LOC]. Lense colors: Clear.	$3,962
5300-0112	Light bar Code 3 Model 2169NFPA1 LED. Location: Centered on the front cab roof.	$3,288
5300-0113	Light bar Whelen Freedom model FL2RRRRF 72" LED with MKEZ7 mounts. Includes (10) red LEDs and (4) blue LEDs. N/A INTL Chassis. Location: Centered on the front cab roof.	$4,661
5300-0114	Light bars Federal Signal Vector/ViewPoint. One (1) center 21" 3 pod and two (2) side 26.5" 4 pod light bars. Lenses to be R/R/W/R-R/W/R-R/W/R/R. Location: "V" centered on the front cab roof.	$2,555
5300-0117	Light bar Code 3 model 729A (PR) 29" long. Red upper / clear lower lens. Location: [#LOC]	$3,146
5300-0118	Light bar Code 3 MX model 769A with R/W/W/W/R upper lenses and clear lower lenses. Upper deck contains (6) rotators and 3-M Opticom. Lower deck contains intersection sweeps, (6) red LED warning and (4) white LED warning. Location: Centered on the front cab roof.	$6,516
5300-0121	Light bars Federal Signal Vector/ViewPoint. One (1) center 21" 3 pod with 3M 792 Opticom and two (2) side 26.5" 4 pod light bars. Lenses to be R/R/W/R-W/W/W-R/W/R/R. Location: "V" centered on the front cab roof.	$4,634
5300-0124	Light bar Federal Signal ViewPoint. Two (2) 26.5" 4 pod LED light bars configured for use w/vista roof that has front windows. Lenses to be R/R/W/R R/W/R/R. Location: [#LOC]	$2,913
5300-0125	Whelen Edge Lht Bar. Note model required for Vista roof cab. Lightbar to include eight LED fixtures. Model FLD-4000 shall be installed adding four more linear LED in the front of the lightbar. Lightbar to be 82" long. Provide prewire for dealer installed opticom in center of bar. FN72VLED Linear LED lightbar. Model FN82QLED 3-FLDRR 9UOPT155 MKEZ7. Due to vista.	$4,512

5300-0126	Light bar Whelen Freedom model FN72VLED 72" LED with 3M9592 Opticom, (12) red LEDs, (2) clear LEDs and MKEZ7 mounts. N/A INTL Chassis or Vista roofs with front facing windows. Location: Centered on the front cab roof.	$7,155
5300-0128	Federal ADX7250 LED Lightbar 72". Includes (12) Solaris 6-LED red reflectors, (4) Solaris 9-LED red reflectors, and (12) Solaris 6-LED white reflectors. Includes (2) flashers, (1) for red LEDs and (1) for white LEDs.	$4,330
5300-0131	Light bar Whelen model FFX2068 19" LED. Location: Centered front of cab below windshield	$1,497
5300-0132	Light bar Federal Signal ViewPoint. Two (2) 26.5" 4 pod LED light bars. Lenses to be R/R/W/R R/W/G/R. Location: [#LOC]	$3,233
5300-0137	Light bar Whelen Freedom model FN72VLED 72" LED with Opticom and MKEZ7 mounts. Includes (10) red LED and (2) white LED. N/A INTL Chassis. Location: Centered on the front cab roof.	$6,628
5300-0138	Light bar package, Federal Signal Escape LED (5) bar package. Includes: (1) 40" LED front bar w/ Opticom, (2) diagonal 26" LED bars and (2) 28" side LED bars.	$10,392
5300-0139	Light bars Federal Signal Vector/ViewPoint. One (1) center 21" 3 pod and two (2) side 26.5" 4 pod LED light bars configured for use w/vista roof that has front windows. Lenses to be R/R/W/R R/R/R R/W/R/R. Location: "V" centered on the front cab roof.	$3,794
5300-0140	Light bar Whelen Freedom model FN72QLED 72" LED with MK8 high mounts. Includes (10) red LED and (4) white LED. N/A INTL Chassis. Location: Centered on the front cab roof.	$4,911
5300-0142	Light bar Federal Signal JetStream 60" LED. Red/White Solaris reflectors with clear domes. NFPA Compliant, does not require 2 addl side facing bars. Location: Centered on the front cab roof	$2,518
5300-0143	Mounting brackets for Federal Signal Vector or Viewpoint lightbars. Height from top of cab to bottom of lightbar to be approx. 4".	$136
5300-0145	Federal ADX7204 LED Lightbar 72". Includes (12) Solaris 9-LED red reflectors and Opticom. Location: Centered on the front cab roof.	$5,247
5300-0147	Light bar Code 3 LED model 2122NFPA1 (PR) 22.5" Long. All red with clear lens. Location: [#LOC].	$3,934
5300-0148	Light bar Whelen model 9MMEDFFD 28 1/4" strobe with MK9 mounts (PR). Lense colors to be RRCR (front to rear). Location: [#LOC]	$2,454
5300-0149	Light bar Federal Signal ViewPoint with 3M Opticom. Two (2) 26.5" 4 pod LED light bars model 535NFPA8P20. Lenses to be Red\Blue\Red\White Opticom\Red\Blue\Red. Location: [#LOC]	$4,959
5300-0150	Light bar Federal Signal ViewPoint. Two (2) 26.5" 4 pod LED light bars. Lenses to be R/B/R/B B/R/B/R. Location: [#LOC]	$2,776
5300-0151	Light bar Whelen Freedom model FN66VLED 66" with MKEZ7 mounts. All LED light bar. Location: Centered on the front cab roof	$3,407
5300-0154	Light bar Federal Signal JetStream 60" LED. Red Solaris reflectors and red domes with clear center and 3M 792 Opticom. NFPA Compliant, does not require 2 addl side facing bars. Location: Centered on the front cab roof	$6,092
5300-0155	Federal ADX5283 LED Lightbar 52" with clear domes. Includes (16) Solaris 6-LED red reflectors, (4) Solaris 6-LED white reflectors, TCL and Opticom. Includes (2) flashers, (1) for red LEDs and (1) for white LEDs.	$5,640
5300-0156	Light bar Federal Signal AeroHawk ADX7202 72" with (6) red and (2) white Solaris LED reflectors. Location: Centered on the front cab roof	$2,914
5300-0159	Light bar Federal Signal ADX7202 72" with (6) red, (2) white Solaris LED reflectors and 3M Opticom. Location: Centered on the front cab roof	$4,774
5300-0160	Light bar Federal Signal JetStream 60" LED. Red Solaris reflectors with center traffic clearing light. NFPA Compliant, does not require 2 addl side facing bars. Location: Centered on the front cab roof	$2,451
5300-0161	Light bar Whelen Freedom model FN72VLED 72" LED with Opticom and MKEZ7 mounts. Includes (10) red LED, (2) white LED and (2) green LED. N/A INTL Chassis. Location: Centered on the front cab roof.	$7,350
5300-0162	Whelen Mini-Freedom LED side facing light bars (PR) model FT8RARRF driver and FT8RRARF officer 24" with MKEZ7 mounts. Location: [#LOC]. Lense colors: Clear.	$3,785
5300-0163	Light bar Whelen Freedom model FN72VLED 72" LED with offset Opticom and MKEZ7 mounts. N/A INTL Chassis or Vista roofs with front facing windows. Location: Centered on the front cab roof.	$5,847
5300-0164	Light bar package, Federal Signal Escape LED (5) bar package. Includes: (1) 40" LED front bar (RRWRR), (2) diagonal 26" LED bars (RWR) and (2) 28" side LED bars (RRR).	$8,004
5300-0167	Whelen Mini-Freedom LED side facing light bars (PR) model FT8RRRRF 28.25" with MKEZ7 mounts. Location: [#LOC]. Lense colors: Clear.	$4,780
5300-0168	Whelen Mini-Freedom LED side facing light bars (PR) model FT8RRRRF 24" with MKEZ7 mounts. Location: [#LOC]. Lense colors: Red.	$3,785
5300-0170	Light bar Federal Signal ViewPoint. Two (2) 26.5" 4 pod LED light bars. Lenses to be R/Opticom/W/R R/W/G/R. Location: Front cab corners	$5,312
5300-0171	Light bar Federal Signal Aerodynic ADL5202 52" with driver red and officer blue lenses. Location: Centered on the front cab roof.	$1,303
5300-0177	Light bars Federal Signal Vector/ViewPoint. One (1) center 21" 3 pod with 3M 792 Opticom and two (2) side 26.5" 4 pod light bars configured for use w/vista roof that has front windows. Lenses to be R/R/W/R-R/Opticom/R-R/W/G/R. Location: "V" centered on the front cab roof.	$6,193
5300-0178	Light bar Federal Signal ViewPoint. Two (2) 20" light bars LED 3 pod. Lenses shall be blue/red/blue. Side facing only. Location: [#LOC].	$2,341
5300-0184	Whelen Mini-Freedom LED side facing light bars (PR) model FT8RCCRF 28.25" with R/C/C/R lenses and MKEZ7 mounts. Location: [#LOC]	$3,755
5300-0188	Light bar Whelen Freedom model FN72VLED 72" LED with Opticom and MK8 high mounts. N/A INTL Chassis or Vista roofs with front facing windows. Location: Centered on the front cab roof.	$5,888
5300-0192	Light bar Code 3 Model XP9588NFPA1 88" LED. All red with clear lenses. Not available on commercial cabs. Location: Centered on the front cab roof.	$4,325
5300-0193	Code3 model XP9501NFPA1 (PR) red LED with clear domes. Location: [#LOC].	$1,837
5300-0194	Light bar Code 3 LED model 2122NFPA1 (3) 22.5" Long. All red with clear lens. Location: (1) centered on front cab roof and (1) each side of center bar front corner facing.	$5,901
5300-0195	Light bar Federal Signal JetStream 60" LED. Red driver/Blue officer Solaris reflectors. Location: Centered on the front cab roof	$2,086

5300-0199	Light bar Whelen Freedom model FL2RRRR 72" LED with Opticom and MKEZ7 mounts. Includes (12) red LED. N/A INTL Chassis. Location: Centered on the front cab roof.	$6,604
5300-0202	Light bar Weldon Aero Maxx II 59" LED. NFPA Compliant, does not require 2 addl side facing bars. Location: Centered on the front cab roof	$2,710
5300-0204	Federal ADX7262 LED Lightbar 72" with clear lenses. Includes (12) Solaris 6-LED red reflectors, (8) Solaris 6-LED blue reflectors, (4) Solaris 9-LED red reflectors, and a 3M Opticom. Includes (2) flashers, (1) for red LEDs and (1) for blue LEDs.	$5,276
5300-0205	Whelen Mini-Freedom LED side facing light bars (PR) model FT8CRRCF 28.25" with CRRC lenses and MKEZ7 mounts. Location: [#LOC].	$3,755
5300-0206	Light bar package, Whelen 4500 LED (5) bar package. Includes: (1) 40" LED front bar w/ Opticom, (2) diagonal 24" LED bars and (2) 28" side LED bars.	$11,714
5300-0207	Federal ADX7250 LED Lightbar 72". Includes (12) Solaris 6-LED red reflectors, (4) Solaris 9-LED red reflectors, and (10) Solaris 6-LED white reflectors and Opticom. Includes (2) flashers, (1) for red LEDs and (1) for white LEDs.	$6,557
5300-0209	Federal ADX7265 LED Lightbar 72". Includes (10) Solaris 6-LED red reflectors, (10) Solaris 6-LED blue reflectors, (4) Solaris 9-LED red reflectors, and a 3M Opticom. Includes (2) flashers, (1) for red LEDs and (1) for blue LEDs.	$5,276
5300-0211	Light bar Whelen Freedom model FN60QLED 60" LED with MKEZ7 mounts. Includes (8) red, (2) white and (2) amber modules. Location: Centered on the front cab roof	$4,468
5310-0000	Light bar Federal Signal Signal Master SML6.	$787
5310-0001	Light bar Federal Signal Signal Master SML8.	$865
5310-0002	Light bar Federal Signal Signal Master SMLED6.	$1,343
5310-0003	Light bar Federal Signal Signal Master SMLED8.	$1,417
5310-0004	Whelen Traffic Advisor Model TA637A - 33" long.	$1,235
5310-0005	Whelen Traffic Advisor Model TA837A - 43.25" long.	$979
5310-0006	Whelen Traffic Advisor Model TA870A - 62" long.	$1,534
5310-0010	Light bar Federal Signal Signal Master SML430, 19.5" long (PR). Mounted each side rear of body.	$908
5310-0011	Light bar CODE 3 model AS10S Arrowstik, 47" long. Mounted center rear body.	$1,132
5310-0012	Diamond plate shield over rear directional light.	$281
5310-0013	Whelen Traffic Advisor Model TA637 LED - 33" long.	$1,516
5310-0014	Light bar CODE 3 model AS839 Arrowstik, 39" long. Lenses to be amber with red on the ends. Mounted center rear body.	$924
5310-0015	Light bar CODE 3 model NASL839 LEDX Narrowstik, 40.5" long. Lights heads are amber with red on the ends. Mounted center rear body.	$1,648
5310-0016	Light bar Federal Signal Signal Master Cuda LED 44" with 8 lights.	$1,773
5310-0017	Whelen Traffic Advisor Model TAL65 LED - 36" long.	$1,214
5310-0018	Whelen Traffic Advisor Model TAM65 LED - 36" long.	$1,569
5310-0019	Light bar Code 3 model NASL847 LED Narrowstik, 47" long. Mounted on rear of body.	$1,645
5310-0022	Light bar Federal Signal Signal Master Cuda LED 34" with 6 lights.	$1,356
5310-0023	Light bar CODE 3 model NASL630 LEDX Narrowstik, 30.5 inches long.	$1,478
5310-0024	Whelen Traffic Advisor Model TA870L LED- 56" long.	$2,329
5310-0025	Directional light circuit wiring through upper level warning.	$67
5310-0027	Whelen Traffic Advisor Model TAM85 LED - 47" long.	$2,196
5310-0028	Whelen Traffic Advisor Model TAM83 LED - 31" long.	$1,609
5310-0029	Smooth plate shield painted job color over rear directional light.	$485
5310-0030	Whelen Traffic Advisor Model TA870L LED- 62" long.	$3,151
5310-0031	Whelen Traffic Advisor Model TA4437L LED- (2) 22.75" long. Locate one each side on rear body.	$1,840
5310-0034	Whelen Traffic Advisor Model TA870L SPL 48" long (PR) with (6) 700 series Super LED amber modules. Location: (1) each side facing on forward compartment tops. Control located officers side of center overhead.	$5,051
5310-0035	Whelen Traffic Advisor Model TAL85 LED - 47" long.	$1,528
5350-0000	Camera backup Intec with monochrome monitor.	$4,060
5350-0001	Camera backup Safety Vision LCD model SV-CLCD70B-625B.	$1,832
5350-0002	FireCom intercom system with (4) cab jacks. N/A with 2 door cab. Headsets to be shipped loose.	$3,894
5350-0003	FireCom intercom system with (4) cab jacks and (1) pump panel jack. N/A with 2 door cab. Headsets to be shipped loose.	$4,138
5350-0007	FireCom intercom system with (6) cab jacks. Custom cabs only. Headsets to be shipped loose.	$5,081
5350-0008	FireCom intercom system with (6) cab jacks and (1) pump panel jack. Custom cabs only. Headsets to be shipped loose.	$5,327
5350-0025	Back up camera for Vehicle Information Control Center. Video displays automatically when transmission is in reverse.	$618
5350-0026	Side facing camera mtd up high on officer side of the cab centrally located (above canopy window if applicable) interlocked with right turn signal. Displays video on vehicle information control center.	$618
5350-0027	Side facing camera mtd up high on driver side of the cab centrally located (above canopy window if applicable) interlocked with left turn signal. Displays video on vehicle information control center.	$618
5350-0028	Forward facing camera mounted (approximately) center of cab.	$618
5350-0048	Setcom intercom system with (6) cab jacks and (1) pump panel jack. Custom cabs only. Headsets to be shipped loose.	$8,032
5350-0049	FireCom intercom system with (5) cab jacks. N/A with 2 door cab. Headsets to be shipped loose.	$4,488
5350-0050	FireCom intercom system with (5) cab jacks and (1) pump panel jack. N/A with 2 door cab. Headsets to be shipped loose.	$4,732
5350-0054	Safety Vision officer's side camera. Requires Safety Vision back-up camera option. SV-620 Kit w/ SV-523. Camera to be located on officer's side mirror.	$800
5350-0057	FireCom intercom system 3025R with (6) cab jacks and (1) pump panel jack. Custom cabs only. Headsets to be shipped loose.	$6,088
5350-0058	Remote head for Firecom intercom. Location: [#LOC].	$405

5350-0060	Diamond plate camera shield.	$186
5350-0061	Safety Vision driver's side camera. Requires Safety Vision back-up camera option. SV-620 Kit w/ SV-523. Camera to be located on driver's side mirror.	$800
5350-0067	FireCom intercom system with (1) cab jack and (1) pump panel jack. Headsets to be shipped loose.	$1,447
5350-0070	Voyager back up camera for Vehicle Information Control center. Video displays automatically when transmission is in reverse.	$621
5350-0071	Voyager side mtd rear facing camera positioned up high on officer side of the cab centrally located (above canopy window if applicable) interlocked with right turn signal. Displays video on Vehicle Information Control center.	$605
5350-0072	Voyager side mtd rear facing camera positioned up high on driver side of the cab centrally located (above canopy window if applicable) interlocked with left turn signal. Displays video on Vehicle Information Control center.	$605
5350-0073	Voyager forward facing camera mounted upper center area of cab for Vehicle Information Control center.	$569
5350-0074	Sigtronics US-45S intercom system with (4) cab jacks, (1) pump panel jack, four headsets / hooks, PTT switches for driver / ppnl. Does not include radio interface cable. Custom cabs only. Headsets to be shipped loose.	$3,826
5350-0076	David Clark model 3800 intercom system with (5) cab head sets. Headsets to be shipped loose.	$6,281
5350-0077	FireCom intercom system 3020R with (5) cab jacks and (1) pump panel jack. N/A with 2 door cab. Headsets to be shipped loose.	$5,068
5350-0078	Smooth plate camera shield painted job color.	$288
5350-0079	Sigtronics US-45D intercom system with (3) cab jacks, (1) pump panel jack, three headsets / hooks, PTT switches for driver/officer/ppnl. Does not include radio interface cable. Custom cabs only. Headsets to be shipped loose.	$3,611
5350-0080	Camera backup Safety Vision LCD model SV-LCD70-625B with split screen capable monitor.	$2,146
5350-0081	Backup Camera to be located in recess direction lightbar box offset to officer side.	$186
5350-0084	David Clark model 3800 intercom system with (6) cab head sets. Headsets to be shipped loose.	$7,104
5350-0085	Safety Vision officer's side camera SV-622RS w/ SV-512 cable. Requires Safety Vision back-up camera option. Camera to be located officer's side of cab, up high rear of front cab door.	$828
5350-0086	Safety Vision driver's side camera SV-622LS w/ SV-512 cable. Requires Safety Vision back-up camera option. Camera to be located driver's side of cab, up high rear of front cab door.	$828
5350-0088	FireCom intercom system 3020R with (6) cab jacks, (1) pump panel jack and (1) rear body jack. Custom cabs only. Headsets to be shipped loose.	$5,730
5350-0089	FireCom wireless intercom system with (4) cab jacks. N/A with 2 door cab. Headsets to be shipped loose.	$5,577
5350-0102	FireCom intercom system 3020R with (6) cab jacks and (1) pump panel jack. Custom cabs only. Headsets to be shipped loose.	$5,661
5350-0110	Camera backup Zone Defense LCD model SYS-323-1-4Q with split screen capable monitor.	$1,768
5350-0111	Camera backup Zone Defense LCD model SYS-323-1-4.	$1,190
5350-0112	Sigtronics US-67S intercom system with (6) cab jacks, six headsets / hooks, PTT switches for driver / officer. Does not include radio interface cable. Custom cabs only. Headsets to be shipped loose.	$4,992
5380-0004	Compartment light incandescent additional (EA). Locate opposite of standard (if applicable) in compartment [#LOC]	$66
5380-0005	Compartment light LED additional (EA). Locate opposite of standard in compartment [#LOC].	$161
5380-0006	Compartment light incandescent additional (EA). Door(s) mounted. Compartment [#LOC].	$103
5380-0007	Compartment light LED additional (EA). Door(s) mounted. Compartment [#LOC].	$272
5380-0008	Compartment light package incandescent for small bodies.	$445
5380-0009	Compartment light package incandescent for medium bodies.	$665
5380-0011	Compartment light package LED for small bodies.	$1,589
5380-0012	Compartment light package LED for medium bodies.	$2,857
5380-0017	Compartment light package POK LED for small bodies. Includes one light per compartment (two if transverse).	$2,045
5380-0018	Compartment light package POK LED for medium bodies. Includes one light per compartment (two if transverse).	$3,344
5380-0022	Compartment light POK LED additional (EA). Locate [#LOC].	$293
5380-0023	Compartment light POK LED additional (EA). Locate [#LOC].	$505
5380-0027	Ground light package for cab and body - small.	$413
5380-0030	Ground light package LED - small.	$1,352
5380-0033	Step light package body - small.	$386
5380-0036	Step light package body LED - small.	$1,324
5380-0042	Light recessed step Truck-Lite incandescent (additional). Locate [#LOC]	$105
5380-0045	Light recessed step Truck-Lite LED (additional). Locate [#LOC]	$161
5380-0048	Compartment light package ROM LED for small bodies. Includes one light per compartment (two if transverse).	$2,571
5380-0049	Compartment light package ROM LED for medium bodies. Includes one light per compartment (two if transverse).	$4,105
5380-0051	Compartment light ROM LED for medical cabinet (EA).	$404
5380-0053	Lights under rear intermediate step LED (2). 4" grommet mounted lights. Lights operated with switch on rear of body. Locate switch below driver side intermediate step.	$479
5380-0055	Cab and body ground lights to be wired through chassis reverse.	$67
5380-0056	Compartment lights to be wired to automatically activate when park brake is set (IPO cab mtd compartment light switch).	$67
5380-0058	Compartment light package Whelen PSCACCCR LED for medium bodies. Light to be stacked vertically on one side of compartment.	$6,950
5380-0059	Additional incandescent ground lights. Locate below L1/R1 and L3/R3.	$466
5380-0060	Additional LED ground light (EA). Location: Below [#LOC]	$181
5380-0062	Compartment light Federal Signal LED additional (EA). Locate opposite of standard in compartment [#LOC]	$129
5380-0063	Compartment light Federal Signal LED additional (EA). Door(s) mounted. Compartment [#LOC].	$240
5380-0064	Compartment light package Federal Signal LED for small bodies.	$1,271

5380-0065	Compartment light package Federal Signal LED for medium bodies.	$2,289
5380-0067	Ground light package Federal Signal LED - small.	$1,352
5380-0069	Step light package body Federal Signal LED - small.	$1,017
5380-0071	Light Federal Signal recessed step LED (additional). Locate [#LOC]	$129
5380-0072	Additional Federal Signal LED ground light (EA). Location: Below [#LOC]	$170
5380-0075	Compartment light incandescent additional (EA). Locate on ceiling of [#LOC].	$66
5380-0076	Compartment light deluxe package Whelen PSC0CDCR LED for medium bodies. Light to be stacked vertically on both sides of compartment.	$6,950
5380-0077	Compartment light package Amdor Luma-Bar LED for medium bodies. Includes one light per compartment (two if transverse).	$2,418
5380-0078	Compartment light Amdor Luma-Bar LED 26-42" long additional (EA). Locate [#LOC].	$234
5380-0079	Compartment light Amdor Luma-Bar LED 48-74" long additional (EA). Locate [#LOC].	$356
5380-0081	Compartment light package Whelen LED for medium bodies.	$4,139
5380-0085	Compartment light package incandescent for small bodies.	$445
5380-0087	Compartment light package Weldon LED for medium bodies.	$1,971
5380-0088	Ground light package Weldon LED - small.	$1,219
5380-0089	Step light package body Weldon LED - small.	$886
5380-0090	Compartment light LED (EA). Location: [#LOC].	$161
5380-0092	Compartment light ROM LED 50-74" long. Locate (2) per door for enclosed pump module application.	$1,011
5380-0098	Compartment light package Whelen PSC0CDCR LED for medium bodies. Light to be stacked vertically on one side of compartment.	$3,475
5380-0111	Compartment light Amdor LED for medical cabinet (EA).	$234
5390-0001	Hosebed Light Unity. Locate at front area of hosebed. Switched with work light switch in cab	$157
5390-0002	Hosebed Light Federal Signal GH Scene. Locate at the front area of hosebed. Switched with worklight switch in cab.	$204
5390-0003	Hosebed light Trucklite. Locate center front of hosebed. Switched with work light switch in cab.	$94
5390-0005	Crosslay light deck Unity. Locate to rear of crosslay (SM) or forward of crosslay (TM).	$153
5390-0006	Deck Lts-Collins FX-12R (PR) Location: [#LOC]	$932
5390-0007	Deck/Scene light circuit wiring through chassis reverse. Requires rear deck or scene light.	$67
5390-0008	Federal Signal GH Scene lights (PR). Switch in cab (driver and officer side facing lights switched separately). Locate [#LOC]	$384
5390-0018	Whelen 600 series 26 degree scene lights (PR) with weatherproof connectors. Switch in cab (driver and officer side facing lights switched separately). Locate [#LOC].	$303
5390-0019	Whelen 700 series 8-32 degree scene lights (PR) with weatherproof connectors. Switch in cab (driver and officer side facing lights switched separately). Locate [#LOC].	$297
5390-0020	Whelen 900 series Gradient Opti-Scene light (PR) with weatherproof connectors. Switch in cab (driver and officer side facing lights switched separately). Locate [#LOC].	$303
5390-0022	Crosslay light Trucklite. Locate to rear of crosslay (SM) and forward of crosslay (TM as applicable). Switched with work light switch in cab.	$94
5390-0023	Tomar 46H13-C 13 degree scene lights (PR) with weatherproof connectors. Switch in cab (driver and officer side lights switched separately). Locate [#LOC].	$336
5390-0024	Deck Light - Trucklite (PR) Location: [#LOC]	$283
5390-0025	Cab scene lights are to be switched with cab doors in addition to standard.	$67
5390-0026	Federal Signal GH Scene cornering lights (PR) wired to turn signals, reverse and work lights. Location: [#LOC]	$736
5390-0027	Hosebed light Whelen 600 series 26 degree scene light with Cast Products LH46501 housing. Locate at the front area of hosebed. Switched with worklight switch in cab.	$188
5390-0029	Crosslay light Whelen 600 series 26 degree scene light with Cast Products LH46501 housing. Locate to rear of crosslay (SM) and forward of crosslay (TM as applicable). Switched with worklight switch in cab.	$188
5390-0030	Deck Lts-Collins FX-6 (PR) Location: [#LOC]	$932
5390-0031	Crosslay light Federal GH Scene light with Cast Products LH90603 housings (PR). Locate on back of cab 1" below roof between vista windows.	$550
5390-0032	(PR) Collins FX-12 w/Internal Poles. Locate (1) each side in deck gun channel. Lights to serve as hosebed/crosslay lighting when applicable.	$1,624
5390-0034	Whelen 600 series 26 degree scene lights (PR) with weatherproof connectors. To be used as cornering lights wired to turn signals and four way flashers. Interlock through park brake. Location: [#LOC].	$303
5390-0035	Federal Signal GH Scene Light (PR). Locate (1) at the front area of hosebed and (1) rearward of the crosslays. Switched with worklight switch in cab. Includes diamond plate mounting box.	$698
5390-0036	Hosebed light circuit wiring through chassis reverse. Requires hosebed light.	$67
5390-0038	4" LED light (black groument) with diamond plate box mount (PR). Locate (1) at front of hosebed and (1) at the crosslay area. Switch with work light switch.	$633
5390-0039	Federal Signal GH Scene lights (PR). Switch in cab (driver and officer side facing lights switched together). Locate [#LOC]	$384
5390-0040	Weldon HID scene lights (PR) with weatherproof connectors. Switch in cab (driver and officer side lights switched separately). Locate [#LOC].	$1,082
5390-0041	Whelen 900 series Gradient Opti-Scene lights (PR) with diamond plate mounting box. Switch in cab (driver and officer side facing lights switched separately). Locate [#LOC].	$458
5390-0042	Whelen 900 series model 90C0ENZR Super LED Opti-Scene light (PR) with weatherproof connectors. Switch in cab (driver and officer side lights switched separately). Locate [#LOC].	$1,471
5390-0043	Crosslay light Trucklite. Locate forward of crosslay. Switched with work light switch in cab.	$94
5390-0044	4" LED light (black groument) with diamond plate box mount at front of hosebed. Switch with work light switch.	$307
5390-0046	Federal Signal GH Scene Light (PR). Locate (1) forward facing for preconnect storage lighting and (1) rearward facing for hosebed storage lighting. Both lights mounted in (1) formed box mounted off forward area of body. Box may shift side to side for best lighting application. both lights switched with worklight switch.	$698

5390-0047	Federal Signal GH Scene Light. Locate rearward facing for hosebed storage lighting. Mounted in (1) formed box mounted off forward area of body. Box may shift side to side for best lighting application. Light switched with worklight switch.	$350
5390-0048	Whelen 600 series gradient Super LED scene lights (PR) with weatherproof connectors. Switch in cab (driver and officer side lights switched separately). Locate [#LOC].	$890
5390-0049	Whelen 600 series 26 degree scene lights (PR) with LH46001 castings. Switch in cab (side facing lights switched separately). Locate [#LOC].	$389
5390-0050	Whelen 500 series LED scene lights (PR) with weatherproof connectors. To be used as cornering lights wired to turn signals and four way flashers. Interlocked with park brake. Location: [#LOC]	$747
5390-0052	Federal Signal GH Scene lights (PR) with diamond plate mounting box. Switch in cab (driver and officer side facing lights switched separately). Locate [#LOC].	$698
5390-0054	Hosebed light Trucklite. Locate (1) each side front of hosebed. Switched with work light switch in cab.	$188
5390-0055	Light Federal Signal GH Scene. Locate at the front area of hosebed. Switched with worklight switch in cab. Includes diamond plate mounting box.	$350
5390-0056	Crosslay light Weldon. Locate to rear of crosslay (SM) or forward of crosslay (TM). Switched with work light switch in cab.	$145
5390-0057	Hosebed light Weldon. Locate at front area of hosebed. Switched with work light switch in cab.	$145
5390-0058	Deck Light - Trucklite LED model 81380 (PR) Location: [#LOC].	$356
5390-0059	Whelen 600 series 26 degree scene lights (PR) with diamond plate mounting box. Switch in cab (side facing lights switched separately). Locate [#LOC].	$484
5390-0066	Whelen 600 series gradient Super LED scene lights (PR) with weatherproof connectors and diamond plate mounting boxes. Switch in cab (driver and officer side lights switched separately). Locate [#LOC].	$976
5390-0068	Havis Shield 12V HID scene lights model KR-4035X-D (PR). Location(s): [#LOC]. Includes switch in cab for side facing lights.	$1,412
5390-0069	Whelen M9 Linear Super LED scene lights (PR) with weatherproof connectors. Switch in cab (driver and officer side lights switched separately). Locate [#LOC].	$1,454
5390-0070	Crosslay light Collins FX-12. Locate to rear of crosslay (SM) and forward of crosslay (TM as applicable).	$467
5390-0071	Hosebed light Collins FX-12. Located center front of hosebed. Switched with work light switch in cab	$467
5400-0003	Engine Compartment Light (EA).	$109
5400-0004	Incandescent pump panel light - additional (EA). Location: [#LOC].	$83
5400-0006	Pump panel LED light package with (3) lights per side pump panel. Pump panels over 45" may require additional lights. Side mount only.	$1,011
5400-0007	LED pump panel light - additional (EA). Location: [#LOC].	$172
5400-0008	(1) pump panel light over the pump control area to be wired to come on when pump shift is placed to pump.	$35
5400-0009	Pump panel LED light package - top mount. Includes (2) lights per side pump panel and (3) lights for top mount panel. Side pump panels over 45" wide may require additional lights. Top mount only.	$1,183
5400-0010	Incandescent pump compartment light (EA).	$119
5400-0011	LED pump compartment light (EA).	$324
5400-0020	Federal NightFighter Light with Internal Pole. Locate [#LOC]. Switched on light head.	$1,127
5400-0021	Federal NightFighter Light with External Pole. Locate [#LOC]. Switched on light head.	$1,949
5400-0030	Fog Lights-Qtz Halogen (PR) [#COL] and located [#LOC].	$244
5400-0031	Pair of Cab Dome Large Lights mounted driver and officer side front. N/A on E-0ne Chassis. Required on Comm Chassis.	$66
5400-0032	Pair of Cab Dome Large Lights mounted driver and officer side Rear. N/A on E-0ne Chassis or two door commercial chassis. Required on Comm Chassis.	$66
5400-0033	Cab Dome Lts Red/White 4" incandescent. White light wired thru door and light assembly mounted rocker switch. Red light thru light assembly mounted rocker switch.	$504
5400-0033	Cab Dome Lts Red/White 4" incandescent. White light wired thru door and light assembly mounted rocker switch. Red light thru light assembly mounted rocker switch.	$504
5400-0034	Dome Lts Red 4" (Ea) [#LOC]. Includes assembly mounted rocker switch.	$119
5400-0034	Dome Lts Red 4" (Ea) [#LOC]. Includes assembly mounted rocker switch.	$119
5400-0035	Dome Lts White 4" incandescent. Includes assembly mounted rocker switch. Requires one for each cab door.	$136
5400-0035	Dome Lts White 4" incandescent. Includes assembly mounted rocker switch. Requires one for each cab door.	$136
5400-0037	Dome Lts Red/White Incandescent. Package includes two lights mounted in the front and two mounted in the rear of the cab. White light wire through door and light assembly mounted switch. Red light through light assembly mounted switch.	$484
5400-0037	Dome Lts Red/White Incandescent. Package includes two lights mounted in the front and two mounted in the rear of the cab. White light wire through door and light assembly mounted switch. Red light through light assembly mounted switch.	$484
5400-0038	Spotlight - 6" Unity (PR) cab post mount	$396
5400-0039	Spotlight Specialty 2150 hand held located on officer's side of cab dash - hardwired.	$338
5400-0041	SpotLt-Fed VisibeamII Remote. If one is selected it will be located centered on cab roof mounted on a bracket. If two are selected, they will be located one each side of cab roof to rear of lightbar.	$599
5400-0042	Maplight-Sunnex [#LOC].	$289
5400-0043	Maplight-Little Lt 18" Flex [#LOC]. Includes on/off switch.	$195
5400-0047	Pump panel light package with (3) lights per side pump panel. Pump panels over 45" may require additional lights. Side mount only.	$567
5400-0048	Pump panel light package - top mount. Includes (2) lights per side pump panel and (3) lights for top mount panel. Top mount only.	$659
5400-0057	Dome lts red/white 4" LED (4). Lights to be located two front and two rear. White light wired through door and light assembly mounted rocker switch. Red light through light assembly mounted rocker switch.	$1,308
5400-0057	Dome lts red/white 4" LED (4). Lights to be located two front and two rear. White light wired through door and light assembly mounted rocker switch. Red light through light assembly mounted rocker switch.	$1,308
5400-0059	Optronics model QH-3000 handheld 12v spotlight. To be hardwired on officer's side of cab dash.	$131
5400-0060	Spotlight Specialty 2150 hand held located on driver's side 3 x 3 post - hardwired.	$338

5400-0061	Golight model 2049 remote control spotlight with black housing. If one is selected it will be located centered on cab roof on a pedistal to rear of lightbar. If two are selected, they will be located one each side of cab roof to rear of lightbar.	$749
5400-0062	Code 3 model GLB3200 remote control spotlight with black housing. If one is selected it will be located centered on cab roof on a pedistal to rear of lightbar. If two are selected, they will be located one each side of cab roof to rear of lightbar.	$1,070
5400-0064	Dome Lts Red/White 4" LED (5). Lights to be located two front and three rear. White light wired through door and light assembly mounted rocker switch. Red light through light assembly mounted rocker switch.	$1,634
5400-0064	Dome Lts Red/White 4" LED (5). Lights to be located two front and three rear. White light wired through door and light assembly mounted rocker switch. Red light through light assembly mounted rocker switch.	$1,634
5400-0065	Maplight-Little Lt 18" Flex LED. Location: [#LOC].	$223
5400-0068	Pump panel LED light package with (3) Whelen 500 lights per side pump panel. Center light on each side to be wired through pump engage. Side mount only.	$1,094
5400-0069	Map light Sunnex HS 761-20 with frosted lens. Location: Officer overhead console inboard of AC vent.	$253
5400-0071	Spotlight Collins CL-12-M hand held located on officer's side of cab dash - hardwired. Includes Handle Lok 1004-2 bracket.	$409
5400-0076	Golight model 2020 permanent spotlight. Location: Centered top of lightbar.	$593
5400-0080	FRC Night Master light with external push-up pole. Locate [#LOC]. Switched on light head.	$1,078
5400-0081	Golight model 2067 remote control spotlight with white housing. If one is selected it will be located centered on cab roof on a pedistal to rear of lightbar. If two are selected, they will be located one each side of cab roof to rear of lightbar.	$749
5400-0082	Maplight-Little Lt 18" Flex [#LOC]. Includes dimmer switch.	$195
5400-0083	Map light Sunnex HS 761-20 with red lens and dimmer switch. Location: Officer overhead console inboard of AC vent.	$253
5400-0084	SpotLt-Fed VisibeamII Remote. If one is select it will be located center on forward vista roof. If two are selected, they will be located one each side front corners of vista cab roof.	$599
5400-0085	Enclose pump panel LED light package with (3) lights per side pump panel. Side mount only.	$1,347
5400-0086	Spotlight Specialty 2150 hand held located on font of map box - hardwired.	$338
5400-0087	Map light Sunnex model HS741-27 with red lens. Location: [#LOC].	$270
5400-0089	Federal Signal Ultrastar Green LED w/ clear lens. Locate on L1 on compt top. Includes switch on pump panel labeled "Hydrant".	$593
5400-0090	Spotlight Specialty 2150 hand held located on officer's side 3 x 3 post - hardwired.	$338
5400-0091	Zico cornering light (PR) with polished stainless steel housing model #ZQL-SS-H7614 wired through turn signals. Includes cornering light relay. Lights to be directed downward. Location: (1) each side of gravel shield (forward).	$890
5400-0092	Weldon pump panel LED light package with (3) lights per side pump panel. Pump panels over 45" may require additional lights. Side mount only	$823
5400-0097	Maplight-Havis Shield 12" Flex LED. Location: [#LOC].	$218
5400-0098	Pump panel LED light package with (3) Whelen 4"round lights per side pump panel. Pump panels over 45" may require additional lights. Side mount only.	$1,011
5400-0104	Spotlight Specialty 2150 hand held located on officer's side, side facing engine cover offset forward below cab dash - hardwired.	$338
5450-0003	Quartz light KwikRaze 500W/110V model KR-905-I with internal telepole. Location(s): [#LOC]	$605
5450-0004	Quartz light KwikRaze 500W/110V model KR-SB-505-W/2-I with external telepole. Location(s): [#LOC]	$951
5450-0005	Quartz light Kwik Raze 500W/110V portable. Location(s): [#LOC].	$385
5450-0006	Quartz light KwikRaze 500W/110V model KR-SB-805-TM-I with external mount tripod telepole. Requires 110V receptacle. Location(s): [#LOC]	$1,415
5450-0007	Quartz light Kwik Raze 500W/110V with recess mount. Location(s): [#LOC].	$879
5450-0008	Quartz light Fire Research Focus 750W/110V model FCA510E-S75-SW with internal pull up pole. Location(s): [#LOC].	$1,343
5450-0009	Quartz light Fire Research Focus 750W/110V model FCA530-S75-SR-SW with side mount push-up pole. Location(s): [#LOC].	$1,418
5450-0010	Quartz light Fire Research Focus 1000W/240V model FCA200-M12 with recess mount. Location(s): [#LOC].	$753
5450-0011	Quartz light Fire Research Optimum 900W/240V model OPA200-R90 with recess mount. Location(s): [#LOC]	$986
5450-0015	Quartz light Fire Research Focus 750W/110V model FCA600-S75-ON-FC603 with 40" telescopic tripod pole. Location(s): [#LOC].	$1,436
5450-0019	Quartz light Fire Research Focus 750W/110V model FCA802-S75-01 with brow mount. Location(s): [#LOC].	$811
5450-0020	Quartz light Fire Research Focus 1500W/240V model FCA600-M15-ON-FC603 with telescopic tripod pole. Location(s): [#LOC]	$1,514
5450-0022	Quartz light Fire Research Optimum 150W/12V model OPA802-HD15-01 with brow mount. Includes switch in driver side overhead cab console. Location(s): [#LOC]	$1,370
5450-0023	Quartz light Fire Research Optimum 150W/12V model OPA510E-HD15-SW with internal pole. Includes switch in driver side overhead cab console. Location(s): [#LOC]	$1,639
5450-0024	Quartz light Fire Research Optimum 750W/110V model OPA510E-S75-SW with internal pull up pole. Location(s): [#LOC]	$1,383
5450-0028	Quartz light Fire Research Optimum 750W/110V model OPA530-S75-SR-SW with side mount external pole. Location(s): [#LOC]	$1,459
5450-0030	Quartz light Fire Research Optimum 750W/110V model OPA600-S75-ON-OP603 with 40" telescopic tripod pole. Location(s): [#LOC]	$1,452
5450-0031	Quartz light Fire Research Optimum 750W/110V model OPA802-S75-01 with brow mount. Location(s): [#LOC]	$867
5450-0032	Quartz light Fire Research Optimum 900W/240V model OPA600-R90-ON-OP603 with telescopic tripod pole. Location(s): [#LOC]	$1,543
5450-0033	Quartz light Fire Research Optimum 150W/12V model OPA530-HD15-SR-SW with side mount external pole. Includes switch in driver side overhead cab console. Location(s): [#LOC]	$1,831

5450-0034	Quartz light MagnaFire 900W/240V model KR-739-HD with portable base. Requires 220V receptacle. Location(s): [#LOC]	$566
5450-0035	Quartz light MagnaFire 900W/240V model KR-1939 with recess mount. Location(s): [#LOC]	$780
5450-0037	Quartz light MagnaFire 900W/240V model KR-939-I with internal pole. Location(s): [#LOC]	$861
5450-0038	Quartz light MagnaFire 900W/240V model KR-SB-539-W/2-I with external pole. Location(s): [#LOC]	$1,128
5450-0039	Quartz light MagnaFire 900W/240V model KR-SB-839-TM-I with external mount tripod telepole. Requires 220V receptacle. Location(s): [#LOC]	$1,226
5450-0041	Quartz light MagnaFire 900W/240V model KR-1539 with cab brow mount. Not available in front center due to DOT lights. Location(s): [#LOC]	$794
5450-0042	Quartz light MagnaFire 70W/12V model KR-931-I-S with internal pole and switch on light head. Includes switch on warning light switch panel in cab. Location(s): [#LOC]	$1,374
5450-0043	Quartz light MagnaFire 70W/12V model KR-SB-531-W/2-I-S with external pole and switch on light head. Includes switch on warning light switch panel in cab. Location(s): [#LOC]	$1,632
5450-0044	Quartz light MagnaFire 70W/12V model KR-1531 with cab brow mount. Includes switch on warning light switch panel in cab. Location(s): [#LOC]. Not available in front center due to DOT lights.	$1,272
5450-0045	Quartz light MagnaFire 750W/120V model KR-736-HD with portable base. Requires 110V receptacle. Location(s): [#LOC]	$522
5450-0046	Quartz light MagnaFire 750W/120V model KR-1936 with recess mount. Location(s): [#LOC]	$810
5450-0048	Quartz light MagnaFire 750W/120V model KR-936-I with internal pole. Location(s): [#LOC]	$929
5450-0049	Quartz light MagnaFire 750W/120V model KR-SB-536-W/2-I with external pole. Location(s): [#LOC]	$1,182
5450-0050	Quartz light MagnaFire 750W/120V model KR-SB-836-TM-I with external mount tripod telepole. Requires 110V receptacle. Location(s): [#LOC]	$1,361
5450-0052	Quartz light MagnaFire 750W/120V model KR-1536 with cab brow mount. Location(s): [#LOC]. Not available in front center due to DOT lights.	$736
5450-0054	Quartz light KwikRaze 1500W/220V model KR-915-I with internal telepole. Location(s): [#LOC]	$688
5450-0055	Quartz light KwikRaze 1500W/220V model KR-SB-515-W/2-I with external telepole. Location(s): [#LOC]	$1,032
5450-0056	Quartz light KwikRaze 1500W/220V model KR-SB-815-TM-I with external mount tripod telepole. Requires 220V receptacle. Location(s): [#LOC]	$1,464
5450-0058	Quartz light Fire Research Optimum 1500W/240V model OPA510E-M15-SW with internal pull up pole. Location(s): [#LOC]	$1,478
5450-0059	Quartz light Fire Research Optimum 750W/110V portable model OPA700-S75-OP703. Location(s): [#LOC]	$738
5450-0060	Quartz light Fire Research Focus 750W/120V model FCA300U-S75 with brow mount. Location: Center of cab brow	$811
5450-0061	Quartz light MagnaFire 150W/12V model KR-SB-532-W/2-I-S with external pole and switch on light head. Includes switch in driver side overhead cab console. Location(s): [#LOC]	$1,761
5450-0063	Quartz light Fire Research Optimum 900W/240V model OPA530-R90-SR-SW with bottom raise pole. Location(s): [#LOC].	$1,459
5450-0064	Quartz light Fire Research Focus 500W/120V model FCA200-S50 with recess mount. Location(s): [#LOC].	$826
5450-0065	Quartz light Fire Research Optimum 1000W/240V model OPA656-M12-ON-OP603 with telescopic tripod pole. Location(s): [#LOC]	$1,543
5450-0066	Quartz light Fire Research Optimum 1500W/240V model OPA512-M15-SW with internal thru roof push up pole. Location(s): [#LOC]	$1,541
5450-0067	Quartz light Fire Research Focus 500W/110V model FCA802-S50-01 with brow mount. Light head and mount to be powder coated black. Location(s): [#LOC]	$790
5450-0069	Quartz light MagnaFire 5000 500W/120V model KR-2555 with cab brow mount. Location(s): [#LOC]. Not available in front center due to DOT lights.	$652
5450-0070	Quartz light MagnaFire 5000 500W/120V model KR-SB-555-W/2-I with external pole. Location(s): [#LOC].	$1,023
5450-0071	Quartz light Fire Research Optimum 750W/110V model OPA200-S75 with recess mount. Location(s): [#LOC]	$883
5450-0072	Quartz light Fire Research Optimum 1500W/240V model OPA100 with internal pole. Location(s): [#LOC].	$1,359
5450-0073	Quartz light Fire Research Focus 750W/120V model FCA300U-S75 with brow mount. Light head and mount to be powder coated black. Location: Center of cab brow	$853
5450-0074	Quartz light timer (ea).	$122
5450-0075	Quartz light Fire Research Optimum 900W/240V model OPA510E-R90-SW with top raise pole. Location(s): [#LOC].	$1,459
5450-0078	Quartz light Fire Research Focus 750W/110V model FCA802-S75-01 with brow mount. Light head and mount to be powder coated black. Location(s): [#LOC]	$853
5450-0079	Quartz light MagnaFire 750W/120V model KR-1536 with cab brow mount. Light head and mount to be powder coated black. Location(s): [#LOC]. Not available in front center due to DOT lights.	$779
5450-0081	Quartz light Fire Research Optimum 750W/110V model OPA656-S75-ON-OP603 with 28" telescopic tripod pole. Location(s): [#LOC]	$1,452
5450-0082	Quartz light Fire Research Focus 750W/110V model FCA656-S75-ON-FC603 with 28" telescopic tripod pole. Location(s): [#LOC].	$1,436
5450-0083	Quartz light Fire Research Focus 1500W/240V model FCA530-M15-SR-SW with side mount push up pole. Location(s): [#LOC]	$1,424
5450-0084	Quartz light Fire Research Focus 150W/12V model FCA510E-D15-SW with internal pole. Includes switch in driver side overhead cab console. Location(s): [#LOC].	$1,019
5450-0086	Quartz light MagnaFire 150W/12V model KR-1532 with cab brow mount. Includes switch on warning light switch panel in cab. Location(s): [#LOC]. Not available in front center due to DOT lights.	$1,339
5450-0087	Quartz light MagnaFire 70W/12V model KR-SB-531-W/2-I with external pole. Includes switch on warning light switch panel in cab. Location(s): [#LOC]	$1,585
5450-0088	Quartz light MagnaFire 70W/12V model KR-SB-631 without pole. Includes switch on warning light switch panel in cab. Location(s): [#LOC].	$1,382
5450-0089	Quartz light MagnaFire 900W/240V model KR-SB-539-W/2-I with external pole. Light head to be powder coated black. Location(s): [#LOC].	$1,169

5450-0091	Quartz light Fire Research Optimum 900W/240V model OPA200-R90 with recess mount. Location(s): [#LOC]. Includes plate stand-off box to allow lights to recess without intruding into hosebed area.	$1,088
5450-0092	Quartz light Fire Research Focus 750W/110V model FCA530-S75-SR-SW with side mount push-up pole. Light head and mounts to be powder coated black. Location(s): [#LOC].	$1,461
5450-0093	Quartz light MagnaFire 70W/12V model KR-3551 with cab brow mount. Includes switch on warning light switch panel in cab. Quest cab only. Location(s): [#LOC].	$1,272
5450-0094	Quartz light Extenda-Lite 750W/110V model E-4750-EX-TL-UI-EX. Location(s): [#LOC].	$771
5450-0095	Quartz light Fire Research Focus 150W/12V model FCA300U-D15 with brow mount. Includes switch in driver side overhead cab console. Location: center of cab brow.	$936
5450-0096	Quartz light Fire Research Optimum 1000W/110V portable model OPA700-M10-OP703. Location(s): [#LOC].	$843
5450-0097	Quartz light MagnaFire 70W/12V model KR-2551 with cab brow mount. Includes switch on warning light switch panel in cab. Location(s): [#LOC]. Not available in front center due to DOT lights.	$1,272
5450-0098	Quartz light Fire Research Optimum 1500W/240V model OPA600-M15-ON-OP603 with telescopic tripod pole. Location(s): [#LOC]	$1,604
5450-0099	Quartz light Fire Research Optimum 1500W/240V model OPA200-M15 with recess mount. Location(s):[#LOC]	$901
5450-0101	Quartz light MagnaFire 150W/12V model KR-SB-532-W/2-I-S with external pole and switch on light head. Includes switch on pump operator panel. Location(s): [#LOC]	$1,761
5450-0102	Quartz light Fire Research Focus 1000W/120V model FCA530-M10-SR-SW-ON with external push up pole. Location(s): [#LOC].	$1,514
5450-0113	Quartz light MagnaFire 150W/12V model KR-932-I-S with internal pole and switch on light head. Includes switch on warning light switch panel in cab. Location(s): [#LOC].	$1,468
5450-0114	Quartz light Fire Research Focus 1000W/120V model FCA200-M10 with recess mount. Location(s): [#LOC].	$753
5450-0115	Light Whelen Pioneer Plus model PFP1 with brow mount. Includes switch in driver side overhead console. Location(s): [#LOC].	$1,396
5450-0116	Quartz light Fire Research Focus 500W/110V model FCA600-S50-ON-FC603 with 40" telescopic tripod pole. Location(s): [#LOC].	$1,436
5450-0117	Light Whelen Pioneer Plus model PFP2 with brow mount and PFLASH. Includes switch in driver side overhead console. Location(s): [#LOC].	$2,135
5450-0118	Quartz light Fire Research Focus 1000W/240V model FCA802-M12-01 with brow mount. Location(s): [#LOC].	$861
5460-0000	Night Scan Powerlite NS10-3000M light tower with four 750 watt 115 volt MagnaFire quartz light heads. Control to be located next to the breaker box. Requires air brakes or air system and auxiliary air tank. Tower to be located [#LOC].	$19,656
5460-0001	Night Scan Powerlite NS10-4500M light tower with six 750 watt 115 volt MagnaFire quartz light heads. Control to be located next to the breaker box. Requires air brakes or air system and auxiliary air tank. Tower to be located [#LOC].	$21,422
5460-0002	Night Scan Powerlite NS15-3000M light tower with four 750 watt 115 volt MagnaFire quartz light heads. Control to be located next to the breaker box. Requires air brakes or air system and auxiliary air tank. Tower to be located [#LOC].	$20,206
5460-0003	Night Scan Powerlite NS15-4500M light tower with six 750 watt 115 volt MagnaFire quartz light heads. Control to be located next to the breaker box. Requires air brakes or air system and auxiliary air tank. Tower to be located [#LOC].	$21,764
5460-0004	Night Scan Powerlite NS15-6000A light tower with four 1500 watt 230 volt quartz light heads. Control to be located next to the breaker box. Requires air brakes or air system and auxiliary air tank. Tower to be located [#LOC].	$19,057
5460-0005	Night Scan Powerlite NS15-6000OPT light tower with four 1500 watt 230 volt Optimum quartz light heads. Control to be located next to the breaker box. Requires air brakes or air system and auxiliary air tank. Tower to be located [#LOC].	$18,801
5460-0006	Night Scan Powerlite NS15-9000OPT light tower with six 1500 watt 230 volt Optimum quartz light heads. Control to be located next to the breaker box. Requires air brakes or air system and auxiliary air tank. Tower to be located [#LOC].	$23,533
5460-0010	Will-Burt Night Scan extension harness. Required when tower is installed on custom cab roof or more than 20' from controller location.	$1,005
5460-0011	Night Scan Chief NS6-3000A light tower with two 1500 watt 230 volt quartz light heads. Control to be located next to the breaker box. Tower to be located [#LOC].	$11,587
5460-0013	Command Light-light tower model CL 605. Includes (6) 500 watt quartz halogen lights and a green strobe. Location: [#LOC].	$18,394
5460-0014	Command Light light tower model CL 610. Includes (6) 650 watt quartz halogen lights and a green strobe. Location: [#LOC].	$16,480
5460-0019	Command Light light tower model CL 611. Includes (6) 1000 watt quartz halogen lights and a green strobe. Location: [#LOC].	$17,762
5460-0020	Night Scan Powerlite NS10-4500 Profiler light tower with three (3) 1500 watt, 230 volt OPTIMUM Fire Research quartz light heads. Control to be located next to the breaker box. Requires air brakes or air system and an auxiliary air tank. Location: [#LOC]	$18,299
5460-0021	Command Light light tower model CL 615. Includes (6) 1500 watt quartz halogen lights and a green strobe. Location: [#LOC].	$17,762
5460-0022	Command Light light tower model KL450. Includes (6) 500 watt quartz halogen lights and a green strobe. Location: [#LOC].	$12,113
5460-0024	Command Light light tower model SL429-RT. Includes (2) 1500 watt quartz halogen lights. Control to be located next to the breaker box. Location: [#LOC].	$7,812
5460-0025	Night Scan Powerlite NS15-5400M light tower with six 900 watt 230 volt MagnaFire quartz light heads. Control to be located next to the breaker box. Requires air brakes or air system and auxiliary air tank. Tower to be located [#LOC].	$20,434
5460-0026	Night Scan Chief NS6-3000A light tower with two 1500 watt 230 volt quartz light heads. Control to be located next to the breaker box. Tower to be located [#LOC].	$11,587
5460-0027	Command Light tower option, back lighting.	$1,815

5460-0028	Command Light light tower model KL450. Includes (6) 500 watt quartz halogen lights and a red strobe. Location: [#LOC].	$12,113
5460-0030	Command Light light tower model KL475HS. Includes (6) 750 watt Magnafire quartz halogen lights and a green strobe. Location: [#LOC].	$12,687
5460-0031	Night Scan Chief NS6-3000M light tower with four 750 watt 115 volt MagnaFire quartz light heads. Control to be located next to the breaker box. Tower to be located [#LOC].	$12,733
5460-0032	Command Light light tower model KL475HS. Includes (6) 750 watt Magnafire quartz halogen lights and a red strobe. Location: [#LOC].	$12,687
5460-0033	Night Scan Powerlite NS15-3600M light tower with four 900 watt 230 volt MagnaFire quartz light heads. Control to be located next to the breaker box. Requires air brakes or air system and auxiliary air tank. Tower to be located [#LOC].	$18,046
5460-0034	Command Light light tower model CL 615. Includes (6) 1500 watt quartz halogen lights, (2) 1000 watt Metal Halide light heads, and a green strobe. Locate [#LOC].	$18,784
5460-0036	Night Scan Chief NS2.3-3000M light tower with four 750 watt 115 volt MagnaFire quartz light heads. Control to be located next to the breaker box. Requires air brakes or air system and auxiliary air tank. Tower to be located [#LOC].	$11,971
5460-0038	Command Light light tower model CL 615. Includes (6) 1000 watt quartz halogen lights and a green strobe. Location: [#LOC].	$17,762
5460-0039	Will-Burt 5.4-17IWM Vertical Light Mast. Includes (4) 1500W Optimum light heads. Locate ceneterd (as applicable) in the forward dunnage pan area over LT/RT. Mast will run into transverse area. Controller to be in L3 forward area for use by the pump operator.	$19,088
5460-0040	Night Scan Powerlite NS15-6000OPT light tower with four 1500 watt 230 volt Optimum quartz light heads. Light heads and base covers painted job color. Control to be located next to the breaker box. Requires air brakes or air system and auxiliary air tank. Tower to be located [#LOC].	$21,593
5460-0042	Will-Burt 5.4-17 Vertical Light Mast. Includes (6) 1500W Optimum light heads. Locate ceneterd (as applicable) in the forward dunnage pan area over [#LOC]. Mast will run into transverse area. Controls will be located next to breaker box.	$19,088
5460-0043	Night Scan Powerlite NS10-6000OPT light tower with four 1500 watt 230 volt Optimum quartz light heads. Control to be located next to the breaker box. Requires air brakes or air system and auxiliary air tank. Tower to be located [#LOC]. Ahead of vista location requires riser.	$21,422
5470-0000	Receptacle twist lock 15A/110V 3 wire NEMA L5-15 with cover plate. Location: [#LOC]	$273
5470-0001	Receptacle twist lock 20A/110V 3 wire NEMA L5-20 with cover plate. Location: [#LOC]	$285
5470-0002	Receptacle twist lock 30A/110V 3 wire NEMA L5-30 with cover plate. Location: [#LOC]	$307
5470-0003	Receptacle household 15A/110V duplex 3-prong NEMA 5-15 with cover plate. Location: [#LOC]	$248
5470-0004	Receptacle household 20A/110V duplex 3-prong NEMA 5-20 with cover plate interior mounted wired to inlet receptacle. Location: [#LOC].	$268
5470-0005	Receptacle household 15A/110V Daniel Woodhead duplex 3 wire NEMA 5-15 w/Daniel Woodhead cover plate. Location: [#LOC]	$496
5470-0006	Receptacle twist lock 15A/110V Daniel Woodhead 3 wire NEMA L5-15 w/Daniel Woodhead cover plate. Location: [#LOC]	$446
5470-0007	Receptacle twist lock 15A/220V Daniel Woodhead 3 wire NEMA L6-15 w/Daniel Woodhead cover plate. Location: [#LOC]	$564
5470-0008	Receptacle twist lock 20A/110V Daniel Woodhead 3 wire NEMA L5-20 w/Daniel Woodhead cover plate. Location: [#LOC]	$460
5470-0009	Receptacle twist lock 20A/220V Daniel Woodhead 3 wire NEMA L6-20 w/Daniel Woodhead cover plate. Location: [#LOC]	$608
5470-0010	Receptacle twist lock 20A 110V/220V Daniel Woodhead 4 wire NEMA L14-20 w/Daniel Woodhead cover plate. Location: [#LOC]	$630
5470-0011	Receptacle twist lock 15A/220V 3 wire NEMA L6-15 with cover plate. Location: [#LOC]	$397
5470-0012	Receptacle twist lock 20A/220V 3 wire NEMA L6-20 with cover plate. Location: [#LOC]	$397
5470-0013	Receptacle twist lock 20A 110V/220V 4 wire NEMA L14-20 with cover plate. Location: [#LOC].	$541
5470-0014	Receptacle twist lock 30A/220V 3 wire NEMA L6-30 with cover plate. Location: [#LOC]	$541
5470-0015	Receptacle twist lock 30A 110V/220V 4 wire NEMA L14-30 with cover plate. Location: [#LOC]	$536
5470-0016	Receptacle shoreline 30A/110V with auto transfer switch. The receptacle shall be located [#LOC].	$917
5470-0017	Receptacle household 20A/110V duplex 3-prong NEMA 5-20 with cover plate. Location: [#LOC]	$258
5470-0018	Receptacle shoreline 50A/110V with auto transfer switch. The receptacle shall be located [#LOC].	$925
5470-0019	Receptacle FirePower 20A/110V model FP-11 with cover plate. Location: [#LOC]	$314
5470-0020	Receptacle 12V military with A pin Positive, B pin Negative, C pin Blank. Location: [#LOC]	$215
5470-0021	12 volt power point wired battery hot. Location [#LOC]	$50
5470-0023	Fuse 15A in B1 compt for 12V power point receptacle.	$81
5470-0024	Receptacle 15A/110V duplex with (1) 3-prong NEMA 5-15 and (1) twist lock NEMA L5-15 with cover plate. Location: [#LOC].	$290
5470-0025	Receptacle household 30A/110V 3-prong NEMA 5-30 with cover plate. Location: [#LOC]	$295
5470-0026	Receptacle household 15A/110V duplex 3-prong NEMA 5-15 with cover plate interior mounted wired to inlet receptacle. Location: [#LOC]	$248
5470-0027	Household switch with weaterproof cover located near receptacle at [#LOC]. Switch to operate single leg of this duplex receptacle.	$448
5470-0028	Receptacle household 20A/110V Daniel Woodhead duplex 3 wire NEMA 5-20 w/Daniel Woodhead cover plate. Location: [#LOC].	$509
5470-0029	Receptacle Hubbell twist lock 20A 110V/250V 3 wire NON-NEMA with cover plate. Location: [#LOC].	$338
5470-0030	Receptacle twist lock 15A/110V 3 wire NEMA L5-15 with yellow Daniel Woodhead cover plate. Location: [#LOC].	$333
5470-0031	Receptacle twist lock 15A/110V duplex 3 wire NEMA L5-15 with yellow Daniel Woodhead cover plate. Location: [#LOC]. Each top duplex will be hooked to toogle switch next to it.	$564
5470-0032	12 volt stainless steel power point w/cover wired battery hot. Location: [#LOC].	$140

5500-0004	Code3 V-con #3692 siren recessed mounted.	$660
5500-0005	Federal electronic Q2B-EF siren. Includes 200 watt speaker with square "EF" grill. Speaker location: [#LOC].	$3,331
5500-0006	Federal electronic Q2B-Q siren. Includes "Q" grill. Speaker location: [#LOC].	$3,777
5500-0009	Federal PA300 siren recessed mounted.	$618
5500-0010	Federal Q2B siren - Flush mounted in bumper. Location: [#LOC].	$2,654
5500-0011	Federal Q2B siren - Pedestal mounted on bumper. Location: [#LOC].	$2,390
5500-0012	Prewire for Federal Q2B mechanincal siren.	$246
5500-0015	Whelen model 295SLSA1 siren with microphone (replaced 295HFSA1). N/A in California.	$822
5500-0016	Code3 V-con #3672 siren recessed mounted.	$660
5500-0017	Whelen model 295HFSM1 siren with mechanical siren tone and microphone. N/A in California.	$904
5500-0019	Code 3 #3997 siren. Requires (1) 200 watt or (2) 100 watt speakers.	$1,520
5500-0020	Federal PA4000 siren recessed mounted.	$662
5500-0022	Federal PA300 siren mounted on electrical access panel between the driver and officer front seats.	$618
5500-0023	Unitrol model UTM1 siren with option to disable Hi/Low feature (UOP09). Route radio re-broadcast cable to officer side overhead for OCFA radio installation.	$661
5500-0026	(MS100 speakers Obsolete from Vendor)Federal electronic Q2B-EF siren. Includes two MS100 speakers with square "EF" grills. Speaker location: [#LOC].	$3,448
5500-0027	Signal Vehicle Products model SS741MG siren recessed mounted.	$522
5500-0030	Code 3 #3997R siren. Requires (1) 200 watt or (2) 100 watt speakers.	$1,520
5500-0031	Whelen model 295HFSA7 siren with microphone.	$1,286
5500-0032	Federal / Unitrol #U480K-4 siren.	$1,364
5500-0034	Federal Rumbler secondary siren. Includes amp, timer, and two speakers mounted under vehicle.	$1,086
5500-0035	Powercall DX5100 siren. For use with (1) 100 watt speaker only.	$770
5500-0036	Whelen model 295HFSC9 siren with microphone. N/A in California.	$1,034
5500-0037	Federal PA300 siren recessed mounted. Microphone to be removed and a plug is to be installed in the wiring hole.	$618
5500-0038	Federal / Unitrol #UTM4 siren.	$1,379
5500-0040	Powercall DX5200 siren. For use with (1) 200 watt speaker or (2) 100W speakers.	$827
5500-0041	Federal electronic Q2B-EF siren. Includes two ES100 speakers with square "EF" grills. Speaker location: [#LOC].	$3,448
5500-0044	Whelen model 295HFSA7 siren with microphone. Microphone to be removed (shipped loose) and a plug is to be installed in the wiring hole.	$1,286
5510-0002	Speaker Federal BP200-EF mounted though bumper. Location: [#LOC].	$1,038
5510-0003	Speaker Federal CP100S pedestal mounted. Location: [#LOC].	$677
5510-0006	Speaker Federal MS100-MSBMT. Location: [#LOC].	$401
5510-0007	Speaker Cast Products SA2401 100W thru bumper. Location: [#LOC].	$452
5510-0008	Speaker Cast Products SA3501 100W thru bumper. Location: [#LOC].	$501
5510-0009	Speaker Federal TS100-N mounted on pump panel.	$409
5510-0012	Speaker Federal TS100 thru bumper. Location: [#LOC].	$480
5510-0013	Speaker Federal Dynamax MS100-EF thru bumper. Location: [#LOC].	$480
5510-0016	Code 3 PB100C electronic siren speaker recessed in front bumper. Location: [#LOC].	$471
5510-0017	Speaker Cast Products SA2403 100W thru bumper. Location: [#LOC].	$452
5510-0018	Whelen SA122FMP electronic siren speaker recessed in front bumper. Location: [#LOC].	$497
5510-0019	University Sound speaker model MIS8C with seperate on / off switch. Locate on driver side upper module area with wire terminating in the center overhead console.	$302
5510-0021	Speaker Federal TS100-N mounted on driver side front compartment face.	$409
5510-0023	Speaker Atkinson Dynamics (Federal) mounted on pump panel.	$551
5510-0024	Speaker Federal TS100 with electric "F" grille thru bumper. Location: [#LOC].	$549
5510-0026	Code 3 FM100C electronic siren speaker recessed in front bumper. Location: [#LOC].	$542
5510-0029	Speaker Federal Dynamax ES100-EF thru bumper. Location: [#LOC].	$480
5550-0006	Whelen LED 6/2/2 lower level warning light package. Includes (6) 600 series (2) 400 series and (2) 500 series light heads w/weatherproof connectors. Locate side facing lights: [#LOC].	$2,856
5550-0007	Whelen LED 8/2 lower level warning light package. Includes (8) 600 series and (2) 500 series light heads w/weatherproof connectors. Locate side facing lights: [#LOC].	$3,077
5550-0008	Whelen strobe/LED 6/2/2 lower level warning light package. Includes (6) 600 series strobes, (2) 400 series strobes and (2) 500 series LED light heads w/weatherproof connectors and required power supplies. Locate side facing lights: [#LOC].	$2,756
5550-0010	Whelen 600 series LED lower level warning light package. Includes (10) LED light heads w/weatherproof connectors. Locate side facing lights: [#LOC].	$3,384
5550-0012	Whelen 600 series strobe lower level warning light package. Includes (10) strobe lights w/weatherproof connectors and required power supplies. Locate side facing lights: [#LOC].	$3,184
5550-0013	Federal Signal strobe/halogen lower level warning light package. Includes (8) strobe, (2) GH1F halogen lts and required power supplies. Locate side facing lights: [#LOC].	$2,688
5550-0014	Federal Signal GS5 strobe lower level warning light package. Includes (10) Lights and required power supplies. Locate side facing lights: [#LOC].	$3,067
5550-0019	Federal Signal MOD1F 8/2 LED lower level warning light package. Includes (8) MOD1F LED surface mounted lights with (2) Model 3300-04 LED lights with an external flasher. Locate side facing lights: [#LOC].	$2,238
5550-0021	Federal Signal GL5 LED lower level warning light package. Includes Ten (10) GL5-R lights. Locate side facing lights: [#LOC].	$2,454
5550-0022	Federal Signal MOD1X LED lower level warning light package. Includes Ten (10) MOD1X red recessed light heads. Locate side facing lights: [#LOC].	$2,069
5550-0023	Federal Signal MOD2X 8/2 LED lower level warning light package. Includes (8) MOD2X LED lights and (2) Model 3300-04 LED lights. Locate side facing lights: [#LOC].	$2,767
5550-0024	Federal Signal MOD2X LED lower level warning light package. Includes (10) MOD2X LED recessed light heads. Locate side facing lights: [#LOC].	$3,021

5550-0028	Code3 strobe/halogen 6/4 lower level warning light package. Includes (6) 40 series strobe lights and (4) OL135 halogen lights and required power supplies. Locate side facing lights: [#LOC].	$4,151
5550-0029	Code3 halogen 4/6 lower level warning light package. Includes Includes (6) 41 series and (4) OL135 halogen lights. Locate side facing lights: [#LOC].	$2,085
5550-0030	Code3 model 65 red LED lower level warning light package. Includes (10) LED lights. Locate side facing lights: [#LOC].	$3,576
5550-0049	Code3 LED 6/2/2 lower level warning light package. Includes (8) model 65 red LED and (2) LXEX1F-R LED lights. Includes chrome bezels where applicable. Locate side facing lights: [#LOC].	$2,830
5550-0052	Flash rate for Federal LED lower level warning lights to be set at pattern 2, alternating triple flash (102 TFPM).	$78
5550-0053	Flash rate for Federal LED lower level warning lights to be set at pattern 8, alternating single flash (150 FPM).	$78
5550-0054	Whelen 600 series Super LED lower level warning light package. Includes (10) red LED light heads w/chrome flanges. Locate side facing lights: [#LOC].	$2,687
5550-0055	Federal Signal QuadraFlare LED lower level warning light package. Includes (10) QL64XF-R LED light heads with bezels. Locate side facing lights: [#LOC].	$2,246
5550-0056	Federal Signal MOD1X 8/2 LED lower level warning light package. Includes (8) MOD1X LED lights and (2) Model 3300-04 LED lights. Locate side facing lights: [#LOC].	$2,273
5550-0057	Federal Signal QuadraFlare LED lower level warning light package. Includes (8) QL64XF-R LED light heads with bezels and (2) Model 3300-04 LED light heads. Locate side facing lights: [#LOC].	$1,886
5550-0059	Whelen Super LED lower level warning light package. Includes (8) red 600 LED light heads and (2) red 500 LED light heads w/chrome flanges. Locate side facing lights: [#LOC].	$2,538
5550-0060	Code3 LED 6/2/2 lower level warning light package. Includes (4) 65BZR, (2) 65FR, (2) 85BZR low on rear and (2) LXEX1F-R. Locate side facing lights: [#LOC]	$3,133
5550-0064	Federal Signal LED/strobe 8/2 lower level warning light package. Includes (8) MOD1F LED surface mounted lights with external flasher and (2) Model GS5 strobe lights with power supply. Locate side facing lights: [#LOC].	$2,821
5550-0066	Tomar lower level warning light package. Includes RECT-46 LED in front quad bezels (to alternate flash, drv side blue, ofc side red), RECT-79SS on ends of bumper gravel shield (clear frt, red rear) in angled forward bezel, RECT-37SS on side of cab down low just ahead of rear cab doors and in rear ww offset forward (red frt/ blue rear), RECT-25 LED (red) in rubrail side facing at rear of body, RECT-46 LED (drv side blue / ofc side red) rear facing down low, three 780-1228-WP power supplies, 930DM-LED-LB flasher for frt lts, and chrome flanges on applicable lts.	$6,702
5550-0067	Flash rate for Federal QuadraFlare LED lower level warning lights to be set at pattern 4, alternating quad flash (75 QFPM).	$78
5550-0069	Flash rate for Federal QuadraFlare LED lower level warning lights to be set at pattern 5, alternating double flash (150 DFPM).	$78
5550-0070	Whelen LED lower level NFPA warning light package (includes upper rear compartment face mounted lights that are wired into lower level switching). Includes (14) lights (8/6).	$4,437
5550-0072	Whelen 600 series Super LED lower level warning light package. Includes (8) red/amber and (2) red LED light heads w/chrome flanges. Locate side facing lights: [#LOC].	$3,029
5550-0073	Whelen Super LED lower level warning light package. Includes (8) 600 Super LED light heads and (2) 900 Super LED light heads w/chrome flanges where applicable. Locate side facing lights: [#LOC].	$2,955
5550-0074	Whelen Super LED 4/2/2/2 lower level warning light package. Includes (4) 600, (2) 900 split, (2)700 split and (2) 500 LED light heads w/weatherproof connectors. Locate side facing lights: at forward most position (900), centered in rear wheelwell (700), and in rubrail (500) side facing at rear of body.	$3,908
5550-0075	Federal Signal QuadraFlare Split LED lower level warning light package. Includes (8) QL64S LED light heads with bezels and (2) Model 360601 LED light heads. Locate side facing lights: at forward most position, centered in rear wheelwell, and side facing at rear of body in rubrail if equipped.	$3,610
5550-0091	Whelen strobe/LED 6/2/2 lower level warning light package. Includes (6) 600 series strobes, (2) 700 series strobes and (2) 500 series LED light heads w/weatherproof connectors and required power supplies. Locate side facing lights: [#LOC].	$2,817
5550-0092	Whelen strobe/LED 6/2/2 lower level warning light package. Includes (6) 600 series super LED, (2) 700 series split lens strobes and (2) 500 series super LED light heads w/weatherproof connectors and required power supplies. Locate side facing lights: [#LOC]	$3,213
5550-0093	Whelen Super LED lower level warning light package. Includes (6) 600 LED red light heads, (2) 400 LED red light heads and (2) 500 red LED light heads w/chrome flanges. Locate side facing lights: [#LOC]	$2,422
5550-0094	Federal Signal strobe lower level warning light package. Includes (8) GS5 strobes and (2) GS2 strobes lts. All lenses to be blue except mid-body which are red. Locate side facing lights: [#LOC]	$3,067
5550-0095	Whelen Super LED lower level warning light package. Includes (7) 600 red LED light heads, and (3) 600 blue LED light head w/chrome flanges. Locate side facing lights: [#LOC]	$2,687
5550-0096	Weldon Diamonback V46 LED lower level warning light package. Includes (10) red LED light heads w/chrome flanges. Locate side facing lights: [#LOC].	$2,727
5550-0097	Whelen 400 series linear Super LED lower level warning light package. Includes (10) red LED light heads w/chrome flanges. Locate side facing lights: [#LOC].	$4,108
5550-0098	Federal Signal QuadraFlare LED lower level warning light package. Includes (8) QL64XF-R LED light heads with bezels and (2) Model 3300-04 LED light heads side forward mounted. Locate side facing lights: [#LOC].	$1,886
5550-0099	Whelen Super LED lower level warning light package. Includes (4) red 600 LED light heads, (4) red/clear 600 split LED light heads and (2) red 500 LED light heads w/chrome flanges. Locate side facing lights: [#LOC].	$3,373
5550-0101	Whelen Super LED lower level warning light package. Includes (6) 600 red LED light heads, (2) 900 red LED light heads and (2) 500 red LED light heads w/chrome flanges. Locate side facing lights: [#LOC].	$2,667
5550-0102	Whelen Super LED lower level warning light package. Includes (6) 600 LED light heads, (2) 900 LED light heads and (2) 500 LED light heads w/chrome flanges. Locate side facing lights: [#LOC].	$2,667
5550-0103	Whelen Super LED lower level warning light package. Includes (8) 600 Super LED light heads and (4) 500 Super LED light heads w/chrome flanges where applicable. Locate side facing lights: [#LOC].	$3,501
5550-0104	Whelen 600 series Super LED lower level warning light package. Includes (8) red and (2) red/white LED light heads w/chrome flanges. Locate side facing lights: [#LOC].	$3,134

5550-0106	Whelen Super LED lower level warning light package. Includes (6) 600 red LED light heads, (2) 400 amber LED light heads and (2) 500 red LED light heads w/chrome flanges. Locate side facing lights: [#LOC].	$2,422
5550-0108	Federal Signal QuadraFlare LED lower level warning light package. Includes (4) QL64XF-R LED light heads, (4) QL64XF-B LED light heads, (1) Model 360501-04 LED light head and (1) Model 360501-03 light head. Lights to alternate red/blue around unit; see specificaton. Locate side facing lights: [#LOC].	$1,958
5550-0109	Federal Signal QuadraFlare LED lower level warning light package. Includes (5) QL64XF-R LED light heads with bezels and (5) QL64XF-B LED light heads with bezels. Locate side facing lights: [#LOC].	$2,246
5550-0110	Whelen Super LED lower level warning light package. Includes (4) red 600 LED light heads, (4) blue 600 LED light heads, (1) red 500 LED light head and (1) blue 500 LED light head. LIghts to alternate red/blue around unit; see specification. Locate side facing lights: [#LOC].	$2,538
5550-0114	Weldon Diamonback V46 LED lower level warning light package. Includes (10) red LED light heads w/clear lenses and chrome flanges. Locate side facing lights: [#LOC].	$2,727
5550-0116	Federal Signal QuadraFlare LED lower level warning light package. Includes (7) QL64XF-R LED, (1) QL64XF-B LED light heads with bezels and (2) Model 360501-04 LED light heads. Locate side facing lights: [#LOC].	$1,886
5550-0117	Whelen Super LED lower level warning light package. Includes (6) 600 Super LED light heads (2 red forward/2 red rearward/2 amber rearward) and (6) side facing 500 Super LED red light heads w/chrome flanges where applicable. Requires additional side facing lights midship to meet blocking mode. Locate side facing lights: [#LOC].	$3,463
5550-0123	Whelen M6 Super LED lower level warning light package. Includes (8) red M6R LED light heads and (2) red 500 Super LED light heads w/chrome flanges. Locate side facing lights: [#LOC].	$3,437
5550-0125	Whelen M6RC Super LED lower level warning light package. Includes (8) red M6RC LED light heads and (2) red 500 Super LED light heads w/chrome flanges. Locate side facing lights: [#LOC].	$3,437
5600-0002	Warning light Whelen 600 series strobe (PR) [#COL]. Requires power pack or option with spare power pack outlets. Includes weatherproof connectors. Requires engineering approval for NFPA applications. Location(s): [#LOC]	$398
5600-0011	Whelen power supply model UPS64LX 4Place 75Watt strobe.	$514
5600-0012	Whelen power supply model ISP148 eight (8) place 140watt strobe.	$1,207
5600-0013	Whelen power supply model ISP188 eight (8) place 180watt strobe.	$1,292
5600-0020	Warning light Whelen 600 series LED (PR) amber. Location: [#LOC] Surface mounted with weatherproof connector. Requires engineering approval for NFPA applications.	$697
5600-0021	Warning light Whelen 600 series LED (PR) red. Surface mounted with weatherproof connector. Location: [#LOC]	$697
5600-0025	Warning light Whelen 600 series halogen (PR) [#COL]. Includes weatherproof connectors. Requires engineering approval for NFPA applications. Location(s): [#LOC]	$322
5600-0029	Code3 Model #550 rotating (PR) with [#COL] domes. Location: [#LOC].	$344
5600-0030	Code3 Model #550/#41. Includes (2) #550's with red domes and (2) #41 lights with [#COL] lenses. Total four (4) lights at rear upper. Location of Model 550 lights: [#LOC].	$888
5600-0031	Code 3 / PSE Oscilaser warning light (PR). Lights are to be located on front of cab in the inboard position of the quad bezel.	$535
5600-0033	Whelen beacon with halogen rotator and 700 series strobe (PR) Model B6R with red domes and [#COL] strobes. Location [#LOC]. Requires power pack.	$763
5600-0034	Federal Model SY12FS Sentry (PR) with [#COL] domes. Location: [#LOC].	$345
5600-0036	Federal Model IVP100 Vector pod (PR) with [#COL] domes. Location: [#LOC].	$411
5600-0037	Hazard (door ajar) light Federal Signal model FB3 Comp R. Location: [#LOC]	$214
5600-0038	Federal Model IVP200F Vector pod warning light (PR) with [#COL] filters. Location: [#LOC].	$447
5600-0040	Whelen beacon Model RB6PAP (PR) with amber lenses. Located one (1) each side at rear. Location: [#LOC]	$421
5600-0041	Warning light Federal Signal GS2 strobe (PR) [#COL]. Requires power pack or option w/spare power pack outlets. Requires engineering approval for NFPA applications. Location(s): [#LOC]	$384
5600-0046	Warning light Federal Signal GH1F halogen (PR) [#COL]. Location(s): [#LOC]	$287
5600-0047	Warning light Federal Signal Model 3300-04 LED w/ bezel (PR). Surfaced mounted with red lens. Location: [#LOC]	$357
5600-0048	Warning light Federal Signal GL5 LED (PR) red. Location: [#LOC]	$570
5600-0049	Warning light Federal Signal GS5 strobe (PR) [#COL]. Requires power pack or option w/spare power pack outlets. Requires engineering approval for NFPA applications. Location(s): [#LOC]	$352
5600-0051	Warning light Federal Signal GL5 LED (PR) amber. Location: [#LOC]	$588
5600-0052	Federal Signal SPS4-NFPA (4) place 90 watt strobe power supply. Required when using Federal Signal strobes.	$509
5600-0053	Federal Signal SPS8-NFPA (8) place 192 watt strobe power supply. Required when using Federal Signal strobes.	$908
5600-0054	Warning light Federal Signal MOD2F LED (PR) clear. Surface mounted. Location: [#LOC]	$908
5600-0055	Warning light Federal Signal MOD1F LED (PR) clear. Surface mounted. Location: [#LOC]	$546
5600-0056	Warning light Federal Signal MOD1F LED (PR) red. Surface mounted. Location: [#LOC]	$479
5600-0057	Warning light Federal Signal MOD1X LED (PR) red. Recess mounted. Location: [#LOC]	$508
5600-0058	Warning light Federal Signal MOD2F LED (PR) red. Surface mounted. Location: [#LOC]	$796
5600-0059	Warning light Federal Signal MOD3F LED (PR) red. Surface mounted. Location: [#LOC]	$1,013
5600-0060	Warning light Federal Signal Meteor with clear lens (PR). Located on front of cab in quad bezels inboard of NFPA lower level warning light.	$533
5600-0061	Mars 888 pedestal mounted traffic clearing light on front of cab above grill.	$846
5600-0062	Warning light Roto Ray 200 with red lenses. N/A on commercial chassis. Locate on front of cab center above grille.	$1,460
5600-0063	Warning light Roto Ray 200 with (2) red and (1) clear lenses. N/A on commercial chassis. Locate on front of cab center above grille.	$1,460
5600-0067	Federal Signal Model #100 beacon (PR) with [#COL] domes. Location: [#LOC].	$440
5600-0068	Warning light Federal Signal Meteor with clear lens and S/S pedistal mounted enclosure. Located on front of cab over grill.	$484

5600-0069	Warning light Federal Signal MOD2X LED (PR) red. Recess mounted. Location: [#LOC]	$687
5600-0074	Opticom Emitter 3M #792H. Emitter and control only. Wire through parking brake. Location: [#LOC].	$2,705
5600-0075	Opticom Emitter 3M #592 Chrome. Emitter and dash control only. Wire through parking brake. Location: [#LOC].	$3,214
5600-0078	Whelen Super LED beacon (PR) Model L31H with [#COL] domes. Location [#LOC].	$1,670
5600-0079	Whelen beacon with halogen rotator and 700 series LED (PR) Model B6TM with red domes and [#COL] LEDs. Location [#LOC].	$1,264
5600-0080	Whelen beacon with LED upper beacon and 700 series Super LED (PR) Model B6LED with red domes and [#COL] LEDs. Location [#LOC].	$2,559
5600-0081	Code 3 / PSE Oscilaser warning light (PR). Lights are to be located on front of cab above quad bezels.	$561
5600-0083	Warning light Code3 LXEX1F-R LED (PR). Surfaced mounted with clear lens. Location: [#LOC]	$636
5600-0085	Tomar EMIT3 Preemption Emitter with chrome housing. Includes pedistal mount and switch on dash. Wire through parking brake. Location: [#LOC].	$1,320
5600-0086	Whelen beacon Model RB6T (PR) with [#COL] domes. Location: [#LOC]	$357
5600-0087	Warning light Code 3 65BZA LED (PR) amber. Surface mounted with bezel. Location: [#LOC]	$512
5600-0088	Warning light Code 3 65BZR LED (PR) Red. Surface mounted with bezel. Location: [#LOC]	$512
5600-0089	Warning Light Code3 model #65BZRW split red/clear LED with chrome bezel (PR). Location: [#LOC]	$673
5600-0090	Warning light Federal Signal QL64XF LED (PR) red. Surface mounted with bezel. Location: [#LOC]	$542
5600-0091	Warning light Federal Signal MOD2X LED (PR) amber. Recess mounted. Location: [#LOC]	$687
5600-0092	Opticom Emitter 3M #792HF. Emitter with filter and control only. Wire through parking brake. Location: [#LOC].	$2,705
5600-0093	Whelen beacon with halogen rotator and 700 series scene (PR) Model B6THAZ1P. Dome color: [#COL]. Location [#LOC].	$1,065
5600-0094	Warning light Federal Signal QL64XF LED (PR) amber. Surface mounted with bezel. Location: [#LOC]	$542
5600-0098	Warning light Whelen 600 series Super LED (PR) amber. Location: [#LOC]	$539
5600-0099	Warning light Whelen 600 series Super LED (PR) red. Location: [#LOC].	$539
5600-0100	Warning light Whelen 600 series Super LED (PR) blue with clear lens. Location: [#LOC]	$539
5600-0101	Whelen beacon with halogen rotator and 700 series LED (PR) Model B6TM with amber dome on driver side, red dome officer side and [#COL] LEDs. Location [#LOC].	$1,264
5600-0103	Compartment light ROM LED additional (EA) ceiling mounted as close to door opening as practical. Location: [#LOC].	$502
5600-0105	Hazard (door ajar) light 2" LED. Location: [#LOC]	$30
5600-0106	Warning light Roto Ray LED with (2) red and (1) clear lenses. Locate on front of cab center above grille.	$2,481
5600-0108	Light Code 3 model 2118-NFPA-2 (PR). Located one each side on rear upper of body.	$1,634
5600-0109	Warning light Whelen 500 series LED (4) red. Surface mounted with weatherproof connector. Flashing lights wired through door ajar. Location: One on each of the interior cab doors (outboard position).	$779
5600-0111	Warning light Whelen 600 series Super LED (PR) white with clear lens. Location: [#LOC]	$611
5600-0112	Warning light Whelen 600 series LED (PR) blue. Surface mounted. Location: [#LOC]	$801
5600-0113	Code 3 Optix 3 LED lights. Locate (1) each side at rear mounted to upper rear warning light brackets. Lights to be amber and switched with the upper rear warning lights.	$566
5600-0114	Tomar RECT-79S (4) two red, two blue and one 780-1228-WP power supply. Includes RECT-79-SMFP chrome bezels. Lights to be located one each side at rear above tail lights (drv side blue, ofc side red) and one each side at rear up high (drv side red, ofc side blue). Lights to flash in an "X" pattern.	$1,915
5600-0115	Tomar RECT-46 LED (PR) one red, one blue. Includes Tomar 930DM-LED-LB flasher and RECT-46LBZ chrome bezels. Locate up high on rear of body just below compartment top (drv side red, ofc side blue). Lights to flash in an "X" pattern with the lower level warning lights.	$888
5600-0116	Warning light Federal Signal MOD2X LED (PR) blue on driver's side, red on officer's. Recess mounted. Location: [#LOC].	$773
5600-0117	Whelen Ultra Freedom Micro Edge LED (PR) Model MCFLED2R clear lense with red LEDs. Location [#LOC].	$1,737
5600-0122	Light Code 3 model 2122NFPA1 (PR) 22.5" long. Red LED with clear lens. Location: one each side on rear body compartment top.	$3,459
5600-0123	Warning light Code 3 LXEX2F-AA LED (PR) amber. Surface mounted with bezel. Location: (1) each side rear compartment face up high	$691
5600-0124	Warning light Code 3 LXEX1F-R LED (PR) red. Surface mounted with bezel. Location: [#LOC]	$627
5600-0125	Code3 model 780 LED flasher. Flasher will control lower level warning lights ipo multiplexing	$1,472
5600-0126	Body Whelen strobe power supply located in R1 on rear wall just below offset.	$106
5600-0128	Warning light Whelen 600 series split Super LED (PR) red/amber. Location: [#LOC]	$699
5600-0129	Warning light Whelen 600 series split Super LED (PR) red/clear. Location: [#LOC]	$752
5600-0130	Whelen model UFM8 LED flasher (PR). Flashers will control lower level warning lights ipo internal flashers. Locate (1) in cab and (1) in body.	$995
5600-0131	Light Whelen model PSR00FRR LED (PR) red. Location: [#LOC]	$342
5600-0132	Warning light Federal Signal QL64XF LED (PR). (1) red and (1) green. Location: Red driver and green officer in front quad inboard of NFPA warning light	$723
5600-0133	Warning light Whelen 900 series Super LED model 90RR5FRR (PR) red. Location: [#LOC]	$1,061
5600-0134	Warning light Whelen 600 series LED red/clear. Surface mounted with weatherproof connector(PR). Location: [#LOC]	$701
5600-0136	Federal MicroEscape LED beacon (PR) with [#COL] lenses. Location: [#LOC]. Requires additional upper level warning or Signal Master.	$1,814
5600-0137	Warning light Whelen 700 series Super LED (PR) red/clear. Surface mounted with weatherproof connector. Location: [#LOC]	$709
5600-0139	Whelen beacon with LED upper beacon and 700 series Super LED (PR) Model B6LED with red LEDs/clear domes and [#COL] LEDs/clear lenses. Location: [#LOC]	$2,559
5600-0140	Warning light circuit wiring through chassis reverse. All warning lights.	$67
5600-0142	Warning light Whelen 900 series Super LED model 90RA5FCR (PR) split red / amber with clear lenses. Location: [#LOC]	$1,061
5600-0143	Warning light Whelen 600 series Super LED (PR) red w/clear lens. Location: [#LOC]	$539

5600-0147	Warning light Whelen 600 series LED (PR). Red driver, blue officer surface mounted with weatherproof connector. Location: [#LOC]	$750
5600-0148	Warning light Federal Signal MOD1F LED (PR) amber. Surface mounted. Location: [#LOC]	$479
5600-0151	Whelen Ultra Freedom Micro Edge LED (PR) (1) driver Model MCFLED2R clear lense with red LEDs and (1) officer MCFLED2B clear lense with blue LEDs. Requires addtional upper level warning lights to meet NFPA. Location: [#LOC].	$1,860
5600-0152	Warning light Whelen 500 series LED (PR) green. Includes switch on pump panel labeled "Ready for Water" Location: (1) centered between grille and windshield on slope, (1) driver side inside of beavertail up high below hosebed opposite officer discharge.	$695
5600-0153	Warning light Whelen 600 series split Super LED (PR) red/blue driver, red/amber officer. Location: [#LOC].	$699
5600-0154	Warning light Whelen 600 series Super LED (PR). Red driver, blue officer surface mounted with weatherproof connector. Location: [#LOC].	$539
5600-0155	Warning light Federal Signal MOD1F LED (PR) (1) red driver, (1) blue officer. Surface mounted. Location: [#LOC].	$554
5600-0156	Warning light Federal Signal QL64XF LED (PR) green. Surface mounted with bezel. Location: [#LOC].	$597
5600-0157	Federal Model SY12FS Sentry with green dome. Includes switch on driver overhead. Location: pole mounted center rear cab roof.	$350
5600-0158	Warning light Federal Signal MOD2f LED (PR) amber. Surface mounted. Location: [#LOC]	$796
5600-0159	Warning light Federal Signal MOD3F LED (PR) red/blue/red. Surface mounted. Location: [#LOC]	$1,013
5600-0160	Warning light Federal Signal QL97XF LED (PR) red. Surface mounted with bezel (if applicable). Location: [#LOC]	$780
5600-0161	Warning light Federal Signal QL97XF LED (PR) amber. Surface mounted with bezel (if applicable). Location: [#LOC]	$780
5600-0162	Warning light Federal Signal QL64XF LED (PR) blue. Surface mounted with bezel. Location: [#LOC].	$542
5600-0163	Warning light Federal Signal Model 3300-03 LED w/ bezel (PR). Surfaced mounted with blue lens. Location: [#LOC].	$455
5600-0164	Warning light Federal Signal QL64XF LED (PR) white. Surface mounted with bezel. Location: [#LOC].	$626
5600-0165	Warning light Whelen 500 series Super Linear LED (PR) green. Location: [#LOC].	$480
5600-0166	Warning light Whelen 600 series Super LED (PR) green. Location: [#LOC].	$711
5600-0168	Fed QuadraFlare QL97SC-RA Red/Amber split color LED lights located on rear of body up high. Red on top on left side and bottom on right side to simulate "X" pattern. Includes external flasher.	$976
5600-0169	Warning light Whelen 900 series Super LED driver side amber / officer side red model 90AA5FAR / 90RR5FRR. Location: [#LOC]	$1,061
5600-0170	Warning light Federal Signal MOD3F LED (PR) amber. Surface mounted. Location: [#LOC]	$1,013
5600-0173	Federal MicroEscape NFPA compliant LED beacon (PR) clear lenses with [#COL] LED reflectors. Location: [#LOC].	$1,353
5600-0176	Mars 888 pedistal mounted traffic clearing lights with clear lenses located one each side of cab above outer quad bezel.	$1,690
5600-0177	Whelen model UFM8 LED flasher (3). Flashers will control warning lights ipo internal flashers. Locate (1) in cab and (2) in body.	$1,492
5600-0180	Whelen beacon with LED upper beacon and 700 series Super LED (PR) Model B6LED with red domes and split red/amber LEDs. Location [#LOC].	$2,624
5600-0181	Warning light Federal Signal Model 360501 LED w/ bezel (PR). Surfaced mounted with blue driver and red officer lenses. Location: [#LOC].	$501
5600-0182	Whelen beacon with LED upper beacon and 700 series Super LED (PR) Model B6LED with amber domes and [#COL] LEDs. Location [#LOC]	$2,559
5600-0183	Warning light Whelen 600 series Super LED (PR). blue driver, green officer surface mounted with weatherproof connector. Location: [#LOC].	$625
5600-0184	Warning light Federal Signal QL64XF LED (PR). (1) red driver, (1) blue officer. Surface mounted with bezel. Location: [#LOC]	$542
5600-0185	Federal Model IVP100 Vector pod (PR) located at the rear cab corners. Driver side to be amber with switch on driver's switch panel and automatically turn off when warning lts are on. Officer side to be blue with switch on driver's switch panel.	$689
5600-0186	Warning light Federal Signal Meteor with red lens and S/S pedistal mounted enclosure. Located on front of cab over grill.	$484
5600-0187	Warning light Federal Signal QL97XF LED (PR). (1) red driver, (1) blue officer. Surface mounted with bezel (if applicable). Location: [#LOC].	$780
5600-0189	Federal Intelli model 650205 LED flasher (PR). Flashers will control lower level warning lights ipo internal flashers. Locate (1) in cab and (1) in body.	$789
5600-0190	Warning light Whelen 600 series Super LED (PR). Blue driver, amber officer surface mounted with weatherproof connector. Location: [#LOC].	$539
5600-0191	Whelen beacon with LED upper beacon and 700 series Super LED (PR) Model B6LED with amber driver and red officer domes and [#COL] LEDs. Location [#LOC].	$2,559
5600-0194	Whelen Super LED beacon Model L11H with amber dome. Includes switch in cab accessible to the driver. Location: center of rear cab roof.	$738
5600-0195	Code3 model XP9501NFPA1 (PR) red LED with clear domes. Location: [#LOC].	$1,837
5600-0196	Fed QuadraFlare QL64SC-RC Red/White split color LED lights in ptd smooth plt alum box above the grille. Red on top on left side and bottom on right side to simulate "X" pattern. Wired to lower zone lighting and switched off with parking brake. Includes ext flasher.	$1,444
5600-0197	Warning light Whelen 600 series Super LED (PR). red driver, green officer surface mounted with weatherproof connector. Location: [#LOC].	$625
5600-0198	Whelen PE215 emitter. Emitter and control only. Wire through parking brake. Location: [#LOC].	$776
5600-0199	Whelen beacon with LED upper beacon and 700 series Super LED (PR) Model B6LED with red driver and blue officer domes and [#COL] LEDs. Location [#LOC].	$2,559

5600-0200	Whelen beacon with LED upper beacon and 700 series Super LED (PR) Model B6LED with red driver and amber officer domes and [#COL] LEDs. Location [#LOC].	$2,559
5600-0201	Warning light Whelen 900 series Super LED model 90RB5FCR (PR) split red / blue with clear lense. Location: [#LOC].	$1,061
5600-0202	Warning light Weldon Diamonback V46W-C00R LED (PR) red w/ clear lenses. Includes diamond plate mounting box. Location: [#LOC].	$825
5600-0205	Warning light Federal Signal GL1F-B LED (PR) blue. Location: [#LOC].	$512
5600-0206	Whelen Micro 400 Super LED (PR) model MC40ED3. Driver side red with red lenses, officer side red side facing with red lenses side and forward; amber rear facing with amber lens. Location [#LOC].	$2,221
5600-0213	Whelen beacon with halogen rotator and 700 series LED (PR) Model B6TM with red dome on driver side, amber dome officer side and [#COL] LEDs. Location [#LOC].	$1,264
5600-0215	Power Arc (PR) Model LED210 yellow with clear lenses. Location: [#LOC].	$1,120
5600-0216	Warning light Whelen M9 series Linear Super LED (PR) red. Location: [#LOC].	$1,223
5600-0217	Power Arc (PR) Model LED210 red with clear lenses. Location: [#LOC].	$1,120
6100-0015	Ladder 50' Mid-Mount. Includes monitor, split steps at tip and jack leg flood lights.	$126,888
6100-0021	(OBS) 65' Snozzle Model HS-2 with dual monitors. Locate individual jack switch plates on driver and officer side front compt face.	$213,193
6100-0022	Mounting - 65' Snozzle torque box and aerial. Includes PTO, hyd pump, pump brkt, pump shaft, hyd hoses, water tank pass-thoughs for boom suport, and boom support for Snozzle supplied boom support bracket.	$8,368
6100-0023	65' Snozzle Model HS-1 with single monitor. Includes auto nozzle leveling, HID tip light, strobe and tracking lights, and individual jack switch plates on driver and officer side front compt face.	$194,545
6100-0024	65' Snozzle Model HS-2 with dual monitors. Includes auto nozzle leveling, HID tip light, strobe and tracking lights, and individual jack switch plates on driver and officer side front compt face.	$207,718
6350-0022	Relief valve Akron model 59 for Snozzle waterway.	$574
6500-0034	(OBS) Automatic nozzle leveling (tip nozzle only) - Snozzle supplied. Includes On-Off switch.	$2,092
6500-0035	Piercing nozzle for Snozzle - Snozzle supplied.	$8,562
6500-0045	Handrails 50' boom - folding. Lowers travel height approx 7.5". Includes switch and wiring to hazard light in cab.	$5,775
6550-0024	Outrigger warning lights (PR) Trucklite model 21 LED in rubrail.	$137
6570-0020	Camera package for Snozzle - Snozzle supplied. Includes infrared thermal imaging camera mounted on tip nozzle with wide angle lens and polarity control, fixed lens color camera mounted on tip nozzle and 10.4" Flat Screen Litton weatherproof monitor. Camera monitor location: [#LOC].	$26,392
6570-0025	DVD 2-Channel recorder for Snozzle cameras. Location: [#LOC].	$4,740
6750-0005	Aerial sign plate 9 x 266 - Snozzle supplied. Right side of booms only. Does not include lettering. Color: [#COL]	$848

8000 PAINT, STRIPING, LETTERING

8100-0065	Paint chassis frame rails, springs, crossmembers, water pump, driveline, fuel and air tanks, and axles shall be painted job color.	$1,669
8100-0070	Paint Valve Ends Job Color	$425
8100-0071	Undercoating E-One	$258
8100-0072	Touch up paint, (1) pint. Dupont paint job color.	$81
8100-0084	Paint all applicable pump application modules job color. Includes upper and lower pump modules, crosswalk module and/or speedlay module (as applicable)	$542
8100-0091	Paint entire front of body job color. Stainless steel bodies only.	$1,946
8100-0092	Paint entire rear of body job color. Stainless steel bodies only.	$1,946
8100-0095	(Obsolete)Touch up paint, (1) quart for each color. Dupont paint job colors.	$314
8100-0096	Paint rear tow eye assemblies job color IPO black.	$245
8100-0097	Paint the pump job color	$518
8100-0100	Special paint break. See sketch / drawing / photo in sales file.	$170
8100-0108	Front wheels to be painted on the inboard side (same color as outboard side).	$279
8100-0109	Rear wheels (4) to be painted on the inboard side (same color as outboard side). Includes outboard side of the inboard wheels.	$557
8100-0115	Paint valve ends 767681EG Black.	$425
8100-0117	Paint cab/body with approved metallic flake paint color.	$2,456
8100-0166	Painted stripe - 12" wide and straight on front, sides and rear of cab and body. Color: [#COL]. Location: [#LOC].	$3,999
8100-0168	All rearward facing access door(s) and pump//bleeder panel(s) to be painted job color.	$828
8100-0170	Painted Stripe - 6" wide with "Z". Stripe straight on front, sides and rear of cab and body. "Z" location to be specified by customer. Color: [#COL]. Location: [#LOC].	$3,999
8100-0172	Paint body two tone color. Paint break will be just above door drip rail. DuPont paint. Color [#COL].	$1,722
8100-0173	Paint mid-mount boom body module job color.	$851
8100-0176	Paint E-One chassis cab - Sikkens paint. Color: [#COL].	$4,973
8100-0177	Cab paint Sikkens two-tone. Upper area of cab to be painted [#COL].	$1,119
8100-0181	Paint body two tone color - Sikkens paint: Color: [#COL].	$1,722
8100-0182	Paint Body - Small - For Pumpers, S/A Tankers and Rescues. Sikkens paint. Color: [#COL].	$1,529
8100-0184	Paint body stainless steel -Small. Sikkens paint. Color: [#COL].	$4,655
8100-0185	Paint body stainless steel - Large. Sikkens paint. Color: [#COL].	$6,916
8100-0188	Durabak coating for all cab and body handrails.	$1,272
8100-0222	Paint all roll up door header plate(s) job color.	$702
8100-0223	The pump/ladder/hardsuction access door and recessed box for directional lightbar to be painted job color.	$274
8100-0225	Paint the pump. Color: [#COL].	$518
8100-0226	Medical cabinet exterior roll-up door two-tone paint adjustment (EA). Includes dis-assembly/re-assembly of existing two-tone roll-up door to match cab paint break.	$412
8150-0012	The interior of the backboard storage compartment to be painted OTO gray. Includes inside surfaces of backboard doors and upper cover plate.	$542
8200-0000	Scotchlite Letter (Each) - 3". Color [#COL].	$15
8200-0001	Scotchlite Letter (Each) - 6". Color [#COL].	$26

8200-0002	Scotchlite Letter (Each) - 9". Color [#COL].	$34
8200-0003	Scotchlite Letter (Each) - 12". Color [#COL].	$35
8200-0004	Scotchlite Letter (Each) - 15". Color [#COL].	$41
8200-0005	Scotchlite Letter (Each) - 18". Color [#COL].	$43
8200-0006	Maltese Cross 12" (Pair)	$1,002
8200-0007	Sign Gold Letter (Each) - 3"	$17
8200-0008	Sign Gold Letter (Each) - 6"	$28
8200-0009	Sign Gold Letter (Each) - 9"	$39
8200-0010	Sign Gold Letter (Each) - 12"	$48
8200-0011	Scotchlite Letters (60) - 3". Color [#COL].	$675
8200-0012	Sign Gold Letters (60) - 3"	$983
8200-0014	Sign "Stay Back 500FT" with black reflective lettering. Locate below rear of body.	$117
8200-0018	Scotchlite Letters (90) - 3". Color [#COL].	$844
8200-0019	Scotchlite Letters (120) - 3". Color [#COL].	$1,011
8200-0020	Sign Gold Letters (90) - 3".	$1,308
8200-0021	Sign Gold Letters (120) - 3".	$1,631
8200-0022	Shade and outline for lettering.	$77
8200-0024	Reflexite Letter (Each) - 18". [#COL] Reflexite letter(s) stitched to vinyl hosebed cover end flap.	$57
8200-0025	Reflexite Letter (Each) - 6". [#COL] Reflexite letter(s) stitched to vinyl hosebed cover end flap.	$32
8200-0026	Die cut letter in stripe (EA).	$21
8200-0027	Scotchlite Letter (Each) - 5". Color [#COL].	$23
8200-0028	Sign Gold Letter (Each) - 5"	$25
8200-0029	Scotchlite Letter (Each) - 10". Color [#COL].	$39
8200-0030	Sign Gold Letter (Each) - 10"	$42
8200-0031	Scotchlite Letter (Each) - 30". Color [#COL].	$81
8200-0036	Scotchlite Letter (Each) - 4". Color [#COL].	$18
8200-0038	Reflexite Letter (Each) - 12". [#COL] Reflexite letter(s) stitched to vinyl hosebed cover end flap.	$45
8200-0039	Maltese Cross SignGold up to 18" dia (PR) with new layout.	$904
8200-0040	Gold leaf letters (90) - 3".	$3,269
8200-0042	Gold leaf lettering and corner scroll package. Package contains (112) 3" gold leaf letters and (4) E-One style golf leaf corner scrolls. Corners scrolls located on forward upper corners of L3/R3 doors and rearward upper corners of L5/R5 doors.	$4,073
8200-0044	Reflexite Letter (Each) - 8". [#COL] Reflexite letter(s) stitched to vinyl hosebed cover end flap.	$37
8200-0045	Gold leaf letters (120) - 3".	$3,804
8200-0046	Scotchlite Letter (Each) - 27". Color [#COL].	$67
8200-0047	Sign Gold Letter (Each) - 4"	$21
8300-0002	NFPA Scotchlite Stripe - 4" wide and straight on front, sides and rear of cab and body. Color: [#COL]. Location: [#LOC].	$813
8300-0003	NFPA Scotchlite Stripe - 6" wide and straight on front, sides and rear of cab and body. Color: [#COL]. Location: [#LOC].	$848
8300-0006	NFPA Scotchlite Stripe - 6" wide with "Z". Stripe straight on front, sides and rear of cab and body. "Z" location to be specified by customer. Color: [#COL]. Location: [#LOC].	$1,416
8300-0008	NFPA Scotchlite Stripe - 5" wide with "S". Stripe straight on front, sides and rear of cab and body. "S" location to be specified by customer. Color: [#COL]. Location: [#LOC].	$2,087
8300-0009	NFPA Scotchlite Stripe - 5" wide with double "S". Stripe straight on front, sides and rear of cab and body. Double "S" locations to be specified by customer. Color: [#COL]. Location: [#LOC].	$3,355
8300-0011	Scotchlite stripe (PR) 1/2" located 1/2" above and below existing stripe. Color: [#COL].	$480
8300-0012	Scotchlite stripes (4) 1/2" located (2) above and (2) below existing stripe. Stripes to be spaced 1/2" apart. Color: [#COL].	$955
8300-0013	NFPA Scotchlite Stripe - 2" and 4" wide with "Z". Stripe straight on front, sides and rear of cab and body. "Z" location to be specified by customer. 2" above 4" with 1" gap between stripes. Color: [#COL]. Location: [#LOC].	$2,097
8300-0018	Sign gold scroll for body door with shade (Ea). Location: [#LOC]	$157
8300-0019	Sign gold scroll for body door (Ea). Location: [#LOC]	$49
8300-0024	Red/White rubrail scotchlite insert.	$185
8300-0025	1/4" Pinstripe above and below existing Scotchlite stripe. Color: [#COL].	$770
8300-0026	Scotchlite stripe 1" located 1" above and below existing stripe. Color: [#COL].	$575
8300-0030	NFPA Scotchlite 10" wide hockey stripe, straight across front and may contour as it transitions from Cab to Body on each side. Color: [#COL]. Location: [#LOC].	$1,765
8300-0032	Chevron "A" style 4" Scotchlite striping on rear of body. Includes rear facing extrusions, panels and doors inboard/outboard of the beavertails(if applicable). Colors to be [#COL].	$3,052
8300-0033	NFPA Scotchlite Stripe - 8" wide and straight on front, sides and rear of cab and body. Color: [#COL]. Location: [#LOC].	$884
8300-0034	Scotchlite stripe 2" located 1" above existing stripe. Color: [#COL].	$718
8300-0036	NFPA Scotchlite Stripe - 8" wide with "S". Stripe straight on front, sides and rear of cab and body. "S" location to be specified by customer. Color: [#COL]. Location: [#LOC].	$2,847
8300-0037	Chevron "V" style 4" Scotchlite striping on rear of body. Includes rear facing extrusions, panels and doors inboard/outboard of the beavertails(if applicable). Colors to be [#COL].	$3,052
8300-0038	Scotchlite stripe 2" located 1" above and below existing stripe. Color: [#COL].	$670
8300-0039	Scotchlite stripe 1" located .5" above and below existing stripe. Color: [#COL].	$575
8300-0040	Signgold border .5" for logo.	$391
8300-0041	Sign gold scroll (14) for body doors with connecting .5" sign gold stripe.	$2,233
8300-0043	NFPA Scotchlite double 2" wide hockey with 1" between stripes, straight across front and may contour as it transitions from Cab to Body on each side. Color: [#COL]. Location: [#LOC].	$2,097
8300-0044	Scotchlite stripe 1" located 1" above existing stripe. Color: [#COL].	$288
8300-0045	1/4" pinstripe. Color: [#COL]. Location: At cab paint break	$168

8300-0046	Scotchlite stripe (PR) 1/2" located directly above and below existing stripe. Color: [#COL].	$480
8300-0049	Signgold body scroll package. (1) each upper corner L1, L3, R1, R3 and (1) each lower corner L2, R2 with connecting 3/4" signgold stripe. See photos on file with sales.	$2,213
8300-0050	Scotchlite stripe (PR) 1" located directly above and below existing stripe on satin roll-up doors only. Color: [#COL].	$480
8300-0051	Scotchlite hockey stripe. Striping from bottom to top with no spacing between as follows: 1" white, 1/4" blue, 5.75" white, 1/4" black, 1/8" gold, 1/4" black, 1.375" white fading to blue at front cab corners, 1/2" black, 1/2" white. Location: bottom of stripes even with top of gravel shield; hockey at L1/R1.	$4,580
8300-0052	Chevron "V" style Scotchlite striping on rear of body outboard of beavertails (if equipped). Colors to be [#COL].	$904
8300-0053	Signgold body scroll package. (1) front lower corner L2 and (1) rear lower corner L5 with connecting 3/4" signgold stripe. (4) R1 (each corner) with connecting 3/4" signgold stripe. (1) R2 lower front corner and (1) R5 lower rear corner with connecting 3/4" signgold stripe.	$1,373
8300-0056	Chevron "A" style 4" individual Scotchlite striping on front bumper. Colors to be [#COL].	$1,261
8300-0057	Arched stripe 6"/2" on front cab door and blend into a straight body stripe. Includes stripe on front bumper. Color: [#COL]	$2,097
8300-0058	Chevron "V" style 4" Scotchlite striping on rear B1 compt door, (3) stripes. Colors to be red/white/black pinstripe.	$790
8300-0059	NFPA Scotchlite Stripe - 10" wide and straight on front, sides and rear of cab and body. Color: [#COL]. Location: [#LOC].	$1,530
8300-0060	Scotchlite Stripe - 5" wide straight on front front of cab below windshield end at radius corners. Color: [#COL].	$214
8300-0061	Chevron "A" style 6" individual Scotchlite striping on rear of body. Includes rear facing extrusions, panels and doors inboard/outboard of the beavertails(if applicable). Colors to be [#COL].	$3,052
8300-0062	Chevron "A" style Scotchlite striping on rear of body outboard of beavertails (if equipped). Colors to be [#COL].	$904
8300-0066	NFPA Scotchlite Stripe - 4" wide with "Z". Stripe straight on front, sides and rear of cab and body. "Z" location to be specified by customer. Color: [#COL]. Location: [#LOC].	$1,328
8300-0067	Chevron "A" style 4" Scotchlite striping on rear of body outside of beavertails. Colors to be [#COL].	$1,261
8300-0068	NFPA Scotchlite Stripe - 10" wide with "S". Stripe straight on front, sides and rear of cab and body. "S" location to be specified by customer. Color: [#COL]. Location: [#LOC].	$3,353
8300-0070	Chevron "A" style 4" Scotchlite striping on rear of body between beavertails. Colors to be [#COL].	$1,737
8300-0072	NFPA Scotchlite Stripe - 10" wide with "Z". Stripe straight on front, sides and rear of cab and body. "Z" location to be specified by customer. Color: [#COL]. Location: [#LOC].	$1,765
8300-0075	Sign gold scroll (4 ea side) for body with connecting .75" sign gold body stripe.	$1,929
8300-0076	Chevron "A" style 4" Scotchlite striping on rear of body between beavertails; body panels and extrusions only (No doors). Colors to be [#COL].	$971
8300-0077	Chevron "A" style Scotchlite striping on rear B1 compt door. Colors to be [#COL].	$1,527
8300-0078	Chevron "A" style 4" 3M "Diamond Grade" striping on rear of body. Includes rear facing extrusions, panels and doors inboard/outboard of the beavertails(if applicable). Colors to be [#COL].	$3,816
8300-0079	Chevron "A" style 4" 3M "Diamond Grade" striping on rear pump panel/bleeder panel(s). Colors to be [#COL].	$637
8300-0080	Chevron "A" style 4" 3M "Diamond Grade" striping on front bumper. Colors to be [#COL].	$1,575
8300-0081	Chevron "A" style 3M "Diamond Grade" striping on rear of body outboard of beavertails (if equipped). Colors to be [#COL].	$1,131
8300-0084	Chevron "A" style 6" printed sheet Scotchlite striping on rear of body. Includes rear facing extrusions, panels and doors inboard/outboard of the beavertails(if applicable). Colors to be [#COL].	$2,067
8300-0085	Scotchlite stripe 1" located directly above and below existing stripe. Color: [#COL].	$575
8300-0088	NFPA Scotchlite Stripe - 4" wide and straight on sides and rear of body only. Color: [#COL]. Location: [#LOC].	$711
8300-0090	Scotchlite stripe 1.5" located directly above and below existing stripe. Color: [#COL].	$610
8300-0091	1/4" Scotchlite pinstripe above and below existing stripe. Color: [#COL].	$879
8300-0093	Chevron "A" style 6" printed sheet Scotchlite striping on front bumper. Colors to be [#COL].	$1,001
8300-0094	Chevron "A" style 4" Scotchlite striping on rear body panels only, no extrusions. Colors to be [#COL].	$2,290
8300-0099	Chevron "A" style 6" printed sheet Scotchlite striping on rear of body between beavertails. Colors to be [#COL].	$1,566
8300-0101	Black rubrail scotchlite insert.	$185
8300-0102	Gold leaf scroll and stripe package. Includes 1/2" stripes around perimeter of driver and officer side assemblies with (4) corner scrolls each side in the corners. See sketch on file.	$5,132
8300-0103	Chevron "A" style 6" Scotchlite striping on rear B1 compt door. Colors to be [#COL].	$1,527
8300-0104	Chevron "V" style 3" Scotchlite striping on rear of body. Colors to be Red/White/Blue.	$3,052
8300-0109	Chevron "A" style 6" 3M "Diamond Grade" striping on rear of body. Includes rear facing extrusions, panels and doors inboard/outboard of the beavertails(if applicable). Colors to be [#COL].	$3,816
8300-0111	Chevron "A" style 6" individual Scotchlite striping on rear of body except for the pump/ladder tunnel access door. Colors to be [#COL].	$3,052
8300-0112	Chevron "A" style 6" Scotchlite striping on rear facing side of the slide out room. Colors to be [#COL].	$1,527
8400-0004	Install customer supplied logos on front cab doors.	$176
8400-0008	Star of life logo 12". Location: [#LOC].	$87
8400-0009	American Flag (EA). Approx size: 7"H x 14"W. Location: [#LOC]	$100
8400-0010	Install customer logo from an existing E-ONE design (EA). Location: [#LOC]	$161
8400-0012	Star of life logo 22.5". Location: [#LOC]	$175
8400-0015	Install customer supplied logos on rear cab doors.	$176
8400-0016	A pair of Customer Logos supplied to E-One in a digital format. Location: [#LOC].	$791
9000	**SUPPORT, DELIVERY, INSPECTIONS AND MANUALS**	
9300-0009	Manuals, Operator and Service CD-ROM.	$299
9300-0010	Approval Drawings	$866
9300-0012	Pump panel approval drawings	$348
9300-0013	Approval Drawings Revised	$173
9300-0017	Manuals Printed (Set)	$785
9300-0018	Manuals, Operator and Service CD-ROM (additional set)	$43
9300-0029	Manuals. (3) each printed for the engine, transmission and pump. Complete repair and maintenance manuals.	$1,739

9300-0032	Manuals printed (3).	$1,123
9300-0033	As built electrical and plumbing drawings.	$2,633
9300-0035	Customer late change order.	$265
9300-0040	As built electrical drawings.	$2,107
9300-0041	As built plumbing drawings.	$2,633
9300-0044	Transmission programming print-out - provided at delivery.	$101
9300-0045	Manuals Printed (Set). Includes (1) service, (1) parts and (5) operation manuals.	$785

Notes:

1) Availability of options are limited by other options selected, and not all options are available in every chassis/apparatus configuration. Selection of an option may require several of the above parts/items to complete the option package.

2) Certain options, alone or in combination with other options, may require heavier axle/suspension packages, longer frames, or reinforced frames at additional cost per the above price list.

3) To configure options, the E-One State Term Schedule authorized dealer will use quote configuration software to select the components necessary to effect the option, feature, or configuration requested and quote the total option price.

Fire Apparatus Quotation for:
STATE OF OHIO TERM SCHEDULE

Quotation Number: 37174 Rev: 11

Unit Description: TDAE-TYPH-075L

Quote Description: Tradition HP75 Aerial Ladder Quint – Typhoon Chassis

Salesperson:

Salescode	Extended Description	Qty	
TESTING COMPLIANCE STANDARD			
1001-0015	The E-ONE supplied components of the vehicle shall meet the requirements of NFPA 1901, 2009 edition.	1	
BUMPERS			
1160-0000	Bumper 10" stainless steel	1	
1160-0011	4" Front Bumper Extension.	1	
FRAME ASSEMBLY			
1250-0003	Frame 10.25 x 3.5 x .375 chassis.	1	
1250-0006	Frame liner 9.375 X 3.125 X .375.	1	
AXLE OPTIONS			
1025-0005	Meritor FL941 front axle 18,700lb	1	
1025-0018	Meritor RS-30-185 single rear axle 31,000lb capacity	1	
1025-0028	Koni shock absorbers for front axle - adjustable.	1	
SUSPENSIONS			
1070-0012	Reyco rear suspension springs rated equal to the capacity of the axle.	1	
WHEEL OPTIONS			
1050-0000	Steel wheels for front axle (2).	1	
1050-0002	Steel wheels for rear axle (4).	1	
TIRE OPTIONS			
1060-0017	Four Michelin 315 rear tires with Mud and Snow tread	1	
1060-0047	Two Michelin 385 tires model XFE for front axle.	1	
1060-0050	Tire pressure monitoring valve stem caps.	1	

Salescode	Extended Description	Qty	
BRAKE SYSTEMS			
1100-0000	16-1/2" x 6" S-cam brakes with ArvinMeritor automatic slack adjusters for front axle	1	
1100-0002	ArvinMeritor 16-1/2" x 7" S-cam brakes with cast brake drums for a single rear axle	1	
1100-0005	Brake system air 4X2/4X4	1	
1100-0006	Parking brake release mounted on the driver's side lower dash	1	
AIR SYSTEM OPTIONS			
1110-0000-001	Inlet for air system. Location: driver door jamb	1	
1110-0002	Air dryer Bendix AD-9	1	
1110-0006	Air lines nylon	1	
1110-0026	Air horns recessed in bumper (PR)	1	
ENGINES & TRANSMISSIONS			
1200-0017	Push button transmission selector	1	
1200-0020	Trans Synd synthetic transmission fluid for EVS 3000.	1	
1200-0097	Electronically limited speed to 68 MPH maximum. Note: Max speed may be set at 65 MPH due to tire rating.	1	
1200-0125	Eng/Trans Cummins ISL 370HP/EVS3000 2010 EPA compliant engine.	1	
SECONDARY BRAKING			
1125-0002	Brake Jacob's engine compression	1	
COOLING PACKAGE			
1800-0013	Cooling system for use with Cyclone II X, Typhoon X, and Quest chassis. For use with 2010 EPA engines. Includes coolant recovery system.	1	
FUEL SYSTEMS			
1350-0003	Fuel system 50 gallon	1	
1350-0012-E69	Fuel shutoff valve. Location: one (1) inlet side of fuel/water separator	1	
1350-0013	Fuel water Racor separator to be a bottom drop out style. Shall include indicator light and audible alarm.	1	
1350-0022	Fuel line hose rubber.	1	
ALTERNATOR			
1700-0005	Alternator Leece Neville 320amp. 320 Amp SAE/275 NFPA Neville	1	
BATTERIES			

Salescode	Extended Description	Qty	
BATTERIES			
1400-0002	Battery four group 31 1000CCA	1	
CHASSIS OPTIONS			
1680-0006	Drivelines 1710	1	
1680-0012	Tow eyes rear frame painted	1	
1680-0042	Tow hooks front painted in the down position.	1	
1680-0051	Aerial hydraulic activation system.	1	
1680-0145-J74	Diesel Exhaust Fluid (DEF) 5 gallon tank. Location: R1 floor offset forward.	1	
CAB MODEL			
1520-0013	Typhoon X medium cab with 58" CA	1	
CAB ROOF TYPE			
1615-0010	Cab roof to be "flat" (non-vista).	1	
CAB BADGE PACKAGE			
1610-0000	Cab and body to have applicable E-ONE logos.	1	
GRILLE			
1620-0004	ABS chrome plated grille.	1	
CAB DOOR OPTIONS			
1550-0003	Rear crew cab doors in the medium position.	1	
1550-0005	Driver and Officer cab door windows. Include forward vent window.	1	
1550-0011	Rear crew cab door windows. Includes manual roll-down actuation. Not available with paddle style door latching.	1	
1550-0016	Door panels cab ABS	1	
1550-0025	All cab doors shall have "L" style exterior latches.	1	
1550-0027	Front cab door windows to manually roll up.	1	
1550-0037-659	(4) Incandescent cab step area lighting. Locate each light in on each cab door in the inboard position. Lights to be switched with door ajar.	1	
1550-0044	All cab door kick plates to be made from diamond plate aluminum.	1	
1550-0059-000-72	Reflective Yellow/Red striping positioned in the "A" formation located in the lower cab door panels	1	
1550-0077	Interior cab door locks - manual. Will be individually actuated from each respective door. Includes barrel style key lock on each exterior cab door.	1	

Salescode	Extended Description	Qty	
CAB DOOR OPTIONS			
1550-0084	All cab exterior access doors to have 1250 keyed locks.	1	
MIRRORS			
1670-0003	Velvac #2010 mirrors. Door mounted with remote control and heat.	1	
MISC EXTERIOR CAB OPTIONS			
1550-0020	Windows cab side fixed driver's side	1	
1550-0033	Windows cab side fixed officer's side	1	
1675-0022	Pair of 18" handrails located just behind driver and officer front door one each side	1	
1675-0023	Pair of 18" handrails located just behind driver and officer rear door (ALS doors if equipped) one each side.	1	
1675-0030	Mud flaps, front, black with E-ONE logo.	1	
1675-0047	Rear cab wall to be 3/16" aluminum diamond plate.	1	
HVAC			
1515-0017	Air conditioning for the Typhoon X, CII X and Quest with Cummins ISC/ISL engine, radiator mounted condensor.	1	
SEATS			
1510-0003	Seats 911 Brand.	1	
1510-0007	Seat cover material vinyl.	1	
1510-0008	Seat color gray	1	
1510-0035-147	Universal air pack bottle bracket (EA). Location: officer's seat	1	
1510-0035-148	Universal air pack bottle bracket (EA). Location: rear facing driver's side	1	
1510-0035-215	Universal air pack bottle bracket (EA). Location: rear facing officer's side	1	
1510-0038	Driver seat 911 air ride.	1	
1510-0042	Officer seat to be 911 fixed SCBA	1	
1510-0050	Rear facing 911 seat with SCBA driver's side	1	
1510-0053	Rear facing 911 seat with SCBA officer's side	1	
1685-0031	Seating capacity tag of four occupants.	1	
MISC INTERIOR CAB OPTIONS			
1685-0000	Cab interior gray. Does not include engine cover or seat color.	1	
1685-0005	Lexan sun visors, driver and officer's side overhead	1	
1685-0057	Heater Rear with Cover (PR) and front heater with heat to the feet for the driver	1	

Salescode	Extended Description	Qty	
MISC INTERIOR CAB OPTIONS			
	and officer		
CAB ELECTRICAL OPTIONS			
1750-0019	Battery charger Super Smart 110 volt, 20 amp.	1	
1750-0029	Switch horn button two position DOT/air horn	1	
1750-0046-195	Cab Headlights. Position: lower	1	
1750-0059-179-04	Receptacle inlet 20amp with a Yellow cover. Location: outside driver's door next to handrail	1	
1750-0075	English dominant main cab gauge cluster.	1	
1750-0083-172	Turn signal Federal Signal QuadraFlare QL64Z-ARROW LED amber pair located upper headlight bezel	1	
1750-0188	DPF Regeneration override switch.	1	
1750-0198-A31	Battery charger to be located behind driver's seat.	1	
5400-0037	Dome Lts Red/White Incandescent. Package includes two lights mounted in the front and two mounted in the rear of the cab. White light wire through door and light assembly mounted switch. Red light through light assembly mounted switch.	1	
BODY MODEL			
3080-0010	Body aerial HP75 / HP78 SideStacker Quest / CII / Typhoon with pump. Single axle. Includes pocket style drop down step at left rear staircase. The rear access doors to match the rear body finish.	1	
BODY COMPT REAR			
3110-0058	Rear of body to have flush un-painted smooth plate body panels to facilitate rear body striping.	1	
AERIAL BODY OPTIONS			
3310-0017	Auxiliary jack pad 24X24 (PR) with side mounted handle. Includes mounting brackets.	1	
3310-0033	Pikepole/Ladder storage. Available on HP75 SideStacker only. The access door to match the rear body finish.	1	
3310-0050	Crosslay triple 5.5" wide single stack to hold up to 200' of 2.0" DJ (each) or 150'-200' 2.5" DJ (each). Includes storage pan to rear of crosslays	1	
3310-0090	Hosebed depth 18" HP75 / HP78 SideStacker. Will hold up to 1200' of 5" LDH. Capacity will be reduced with diamond plate covers.	1	
DOORS			
3300-0007-006	Door single vertically hinged painted. Location(s): L4	1	

Salescode	Extended Description	Qty	
DOORS			
3300-0008-015	Door double vertically hinged painted. Location(s): R1	1	
3300-0008-016	Door double vertically hinged painted. Location(s): R2	1	
3300-0011-004	Door single horizontally hinged lift-up painted. Location(s): L2	1	
3300-0011-005	Door single horizontally hinged lift-up painted. Location(s): L3	1	
3300-0030-003	Door double 3-point vertically hinged painted. Location(s): L1	1	
COVERS			
3305-0007-000-02	Vinyl Red hosebed cover with attached rear flap(s).	1	
3305-0008-000-02	Vinyl Red crosslay cover with attached side flaps.	1	
PUMP MODULE			
3130-0076	Pump panel opening is 47" wide.	1	
PUMP PANELS			
3134-0012	Officer side upper pump access panel to be horizontally hinged with diamond plate door. Includes (2) push button latches and (2) hold open devices.	1	
3134-0016	Stainless steel driver and officer side pump panels.	1	
3134-0064	The gauge panel(s) on the driver side of the Side Mount module to be hinged upward. Panel(s) to include (2) mechanical/pneumatic (as applicable to panel size) hold opens and latches.	1	
MISC PUMP PANEL OPTIONS			
4460-0003	Pump Panel Tags Color Coded per NFPA Compliance	1	
WATER TANK			
4010-0033	500 gallon "T" water tank.	1	
TANK PLUMBING			
4450-0010	2" Tank Fill Akron Manual Valve	1	
4450-0022	3" Tank to Pump Akron Manual Valve	1	
LADDER STORAGE / RACKS			
3365-0014-610	Dual ladder tunnel for HP75 / HP78 SideStacker. Ladder rack to hold: PEL3-35, PEL-24 and (2)PRL-16. Requires roof ladder option on base section of aerial to meet 115' NFPA requirement.	1	
HANDRAILS / STEPS			
3330-0001	Slideout platform-integral driver side running board.	1	

Salescode	Extended Description	Qty	
HANDRAILS / STEPS			
3330-0007-060	Folding Step. Location officer side front compartment face. Each location requires a minimum of (1) handrail per NFPA.	3	
3330-0007-062	Folding Step. Location driver side front compartment face. Each location requires a minimum of (1) handrail per NFPA.	3	
MISC BODY OPTIONS			
3090-0001	Hosebed capacity aerial. Provide standard size hosebed.	1	
3090-0002	The unit has no overall height restrictions.	1	
3090-0004	The unit has no overall length restrictions.	1	
3340-0015	Diamond plate single axle wheel well. Includes bolt-on composite wheel well liners and aluminum fenderettes.	1	
3340-0093	Mud flaps, rear, black with E-ONE logo.	1	
3340-0270	The painted aerial body side panels shall be smooth / flush. Applies to SideStacker HB side, panels next to water tank on MM, and upper body sides on RLP.	1	
SCBA BOTTLE STORAGE			
3320-0020	SCBA Bottle Storage. (4) Fire Shopp SCBA bottle storage with hinged doors with push button latches. (2) officer side and (2) driver side in wheel well area.	1	
PUMPS			
4005-0013	Hale QFLO 750-1250 GPM Pump single stage	1	
4005-0030	Rating 1250 GPM	1	
PUMP CERTIFICATION			
4475-0000	Pump certification 750-2250 GPM	1	
PUMP OPTIONS			
4015-0053-198	Steamers to be Flush + 1 Location: driver's side.	1	
4015-0053-199	Steamers to be Flush + 1 Location: officer's side.	1	
4015-0101	Pump Cooler	1	
INTAKES			
4440-0005	2.5" Left Intake Akron Manual Valve	1	
INTAKE OPTIONS			
4445-0009	Valve Relief Intake - Akron	1	
DISCHARGES AND PRECONNECTS			

Salescode	Extended Description	Qty	
DISCHARGES AND PRECONNECTS			
4415-0012-654	1.5" Crosslay with Akron Manual Valve. Location: crosslay 1 & 2	2	
4415-0051	4" Waterway Discharge with 3" Akron Manual Valve	1	
4415-0058-655	2.5" Crosslay Akron Manual Valve. To be located rearward of 1.5" crosslay(s) if applicable. Location: crosslay 3	1	
4415-0161-581	2.5" Left Panel Discharge Akron Manual Valve w/30 Degree Droop Location: left side discharge 1	1	
4415-0161-582	2.5" Left Panel Discharge Akron Manual Valve w/30 Degree Droop Location: left side discharge 2	1	
4415-0164-583	2.5" Right Panel Discharge Akron Manual Valve w/30 Degree Droop Location: right side discharge 1	1	
DISCHARGE OPTIONS			
4417-0058-359	Bleeder Drain Valve Plumbed to: waterway discharge	1	
4417-0058-573	Bleeder Drain Valve Plumbed to: crosslay preconnect	3	
4417-0058-575	Bleeder Drain Valve Plumbed to: left discharge	2	
4417-0058-576	Bleeder Drain Valve Plumbed to: right discharge	1	
PRESSURE GOVERNORS			
4465-0005	Class1 Captain pressure governor.	1	
GAUGES			
4435-0001	Class 1 Intelli-Tank Water Tank Level Gauge	1	
4435-0013	Class 1 Pressure 4.5" Gauge (30-0-600 PSI)	2	
4435-0015-352	2.5" Class 1 Pressure Gauge (30-0-600). Discharge: 1.5 in. crosslay preconnect	2	
4435-0015-353	2.5" Class 1 Pressure Gauge (30-0-600). Discharge: 2.5 in. crosslay preconnect	1	
4435-0015-359	2.5" Class 1 Pressure Gauge (30-0-600). Discharge: waterway discharge	1	
4435-0015-581	2.5" Class 1 Pressure Gauge (30-0-600). Discharge: left side discharge 1	1	
4435-0015-582	2.5" Class 1 Pressure Gauge (30-0-600). Discharge: left side discharge 2	1	
4435-0015-583	2.5" Class 1 Pressure Gauge (30-0-600). Discharge: right side discharge 1	1	
4435-0069	Enfo IV System on Pump Operator's Panel	1	
ELECTRICAL SYSTEMS			
5010-0003	Multiplex modem kit. Includes cable, modem, and adapter harness.	1	
5010-0004	Multiplex Data Logger	1	
5010-0005	Multiplex electrical system for aerials.	1	

Salescode	Extended Description	Qty	
ELECTRICAL SYSTEMS			
5010-0013-E91	Vehicle data recorder - 2009 NFPA compliant. Includes occupant detection with display. Display location: Driver side of center dash electrical cover.	1	
LIGHT BARS			
5300-0015-035	Light bar Federal Signal ADX2201 LED (PR) with red lenses. Location: front cab corners at 20 degree angle	1	
WARNING LIGHT PACKAGES			
5550-0055-537	Federal Signal QuadraFlare LED lower level warning light package. Includes (10) QL64XF-R LED light heads with bezels. Locate side facing lights: at forward most position, on side of cab down low just ahead of rear door, and on rear fixed outrigger cover.	1	
5550-0067	Flash rate for Federal QuadraFlare LED lower level warning lights to be set at pattern 4, alternating quad flash (75 QFPM).	1	
WARNING LIGHTS			
5600-0034-268-09	Federal Model SY12FS Sentry (PR) with driver amber, officer red domes. Location: each side of pump module offset to the rear.	1	
5600-0034-479-09	Federal Model SY12FS Sentry (PR) with driver amber, officer red domes. Location: rear upper body on aerial style brackets.	1	
5600-0149-170	Hazard (door ajar) light 2.5" incandescent. Location: center overhead	1	
SIRENS			
5500-0009	Federal PA300 siren recessed mounted.	1	
5500-0024-170	The electronic siren control is to be located on the center overhead.	1	
SPEAKERS			
5510-0029-209	Speaker Federal Dynamax ES100-EF thru bumper. Location: driver side front bumper.	1	
DOT LIGHTING			
5150-0017	License plate light LED with chrome housing located at the rear of the body.	1	
5150-0026	Marker light LED body/cab package. E-ONE custom cab with aerial ladder, Mid-Mount platform or Bronto bodies only.	1	
5150-0062	Federal Signal QuadraFlare LED horizontal mount taillights. Includes LED stop/tail, arrow turn and backup lights with horizontal Cast 3 housing and weatherproof connectors.	1	
LIGHTS - COMPARTMENT, STEP & GROUND			
5380-0009	Compartment light package incandescent for medium bodies.	1	

Salescode	Extended Description	Qty	
LIGHTS - COMPARTMENT, STEP & GROUND			
5380-0027	Ground light package for cab and body - small.	1	
LIGHTS - DECK AND SCENE			
5390-0002	Hosebed Light Federal Signal GH Scene. Locate at the front area of hosebed. Switched with worklight switch in cab.	1	
5390-0005	Crosslay light deck Unity. Locate to rear of crosslay (SM) or forward of crosslay (TM).	1	
5390-0008-445	Federal Signal GH Scene lights (PR). Switch in cab (driver and officer side facing lights switched separately). Locate up high on rear access door	1	
LIGHTS - NON-WARNING			
5400-0003	Engine Compartment Light (EA).	1	
5400-0010	Incandescent pump compartment light (EA).	1	
CONTROLS / SWITCHES			
5100-0000-199	Foot Switch to control air horns located officer's side	1	
5100-0007-198	Foot Switch to control electronic siren located driver's side	1	
MISC ELECTRICAL			
1750-0082-762	12V power distribution module. Includes (6) battery hot and (6) switched hot circuits. 100 amps max (IATS). Location: behind officer's seat	1	
5110-0017	Back up alarm 97 dB(A).	1	
AERIAL MODEL			
6100-0005	Ladder HP75 with waterway. Includes left side console with cover, split steps at tip and jack leg flood lights.	1	
AERIAL HYDRAULIC SYSTEM OPTIONS			
6150-0003-216	Gauge aerial hydraulic oil level. Electronic display to be located on pump operators panel.	1	
MONITORS			
6300-0002	Monitor Akron electric 1000GPM for ladder. Includes tip and base controls.	1	
6300-0017	Monitor painted silver from OEM.	1	
AERIAL WARNING LIGHTS			
6550-0011	Outrigger warning lights (PR). Weldon Model 1010.	1	
AERIAL LIGHTING			

Salescode	Extended Description	Qty	
AERIAL LIGHTING			
6560-0002-231	Spot light 12V located left side tip.	1	
6560-0005	Flood lights Unity at base (PR).	1	
WATERWAY OPTIONS			
6350-0005	Rear 4" NST waterway inlet for rear mounted aerials. Includes chrome cap.	1	
6350-0006	2.5" Waterway pressure gauge. Locate next to waterway inlet.	1	
6350-0010	Flowminder with single readout and totalizer for the aerial waterway to be located at the aerial control station.	1	
MISC AERIAL ELECTRICAL			
6570-0008	Intercom aerial 2-way. Atkinson Dynamics (Federal). Speaker to be located to rear of platform on Bronto units.	1	
SIGN PLATES			
6750-0000-000-39	Aerial sign plates 10 x 144 (PR). Available on Booms, HP75 and HP100 only. Does not include lettering. Color: Job Color	1	
AERIAL TESTING			
6900-0000	Aerial flow test - 3rd party.	1	
6900-0002	Aerial 2009 NFPA Certification.	1	
HAND TOOLS			
7600-0005	Pike Pole Fiberglass 6'	2	
7600-0007	Pike Pole Fiberglass 10'	2	
7600-0008	Pike Pole Fiberglass 12'	2	
GROUND LADDERS			
7800-0010	Alco-Lite PRL-16 Roof Ladder	2	
7800-0016	Alco-Lite PEL-24 Extension Ladder	1	
7800-0023	Alco-Lite PEL3-35 3 Section Extension Ladder	1	
MISC LOOSE EQUIPMENT			
7900-0014	DOT Required Drive Away Kit - Kit includes three (3) triangular warning reflectors with carrying case. This kit is for the end user and is to remain with the truck.	1	
EXTERIOR PAINT			
8100-0089	All applicable pump/pre-connect application modules are to have a sanded finish (not painted job color). Includes upper and lower pump modules, crosswalk module	1	

Salescode	Extended Description	Qty	
EXTERIOR PAINT			
	and/or speedlay/pre-connect module (as applicable). Rear mounted body/pump module to be painted job color.		
8100-0116	Rear body surface to have a sanded finish (not painted job color). Includes hinged doors that do not have discrete sales codes and removable panels.	1	
8100-0176-000-17	Paint E-One chassis cab - Sikkens paint. Color: FLNA3225 Red.	1	
8100-0183-000-17	Paint Body - Large - For Aerials, T/A Tankers, Rear Mounts and Rescues. Sikkens paint. Color: FLNA3225 Red.	1	
8100-0186-000-39	Paint exterior surface of outer steel wheels. Sikkens paint. Color: Job Color.	1	
INTERIOR PAINT			
8150-0011	The interior of the cab to be paint Zolatone gray	1	
STRIPING			
8200-0015	White Reflective Tape on 2 Outriggers	1	
8300-0002-333-12	NFPA Scotchlite Stripe - 4" wide and straight on front/sides of cab and sides/rear of body. Color: White. Location: top of stripe flush with top of bumper and straight back.	1	
8300-0042	White rubrail scotchlite insert.	1	
8300-0084-000-72	Chevron "A" style 6" printed sheet Scotchlite striping on rear of body. Includes rear facing extrusions, panels and doors inboard/outboard of the beavertails(if applicable). Colors to be Yellow/Red.	1	
WARRANTY / STANDARD & EXTENDED			
9100-0000	Standard 1 Year Warranty	1	
9100-0003	Lifetime Frame Warranty	1	
9100-0004	10 Year/100,000 Mile Structural Warranty - Statement of Warranty	1	
9100-0005	10 Year Stainless Steel Plumbing Warranty - Statement of Warranty	1	
9100-0007	20 Year Aerial Device Structural Warranty - Integrity Limited Warranty	1	
9100-0019	10 Year Limited Paint and Perforation Warranty - For Sikkens Paint	1	
SUPPORT, DELIVERY, INSPECTIONS AND MANUALS			
9300-0000	Vehicle familiarization aerial (Domestic).	1	
9300-0038	Manuals, operator, service and exploded view parts CD-ROM.	1	
PRICE			$521,822.

STATE OF OHIO TERM SCHEDULE

4200 SURFACE RD
COLUMBUS, OH 43228

Quote No: 37174

3/6/2010

Quote Rev:11 Drawing Rev:1

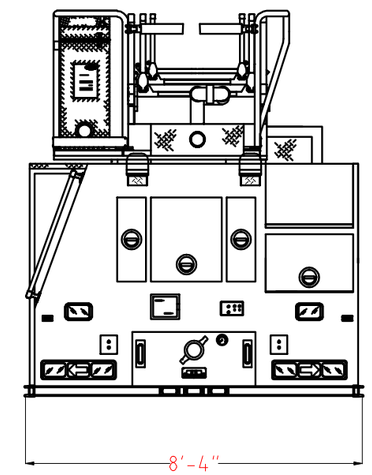

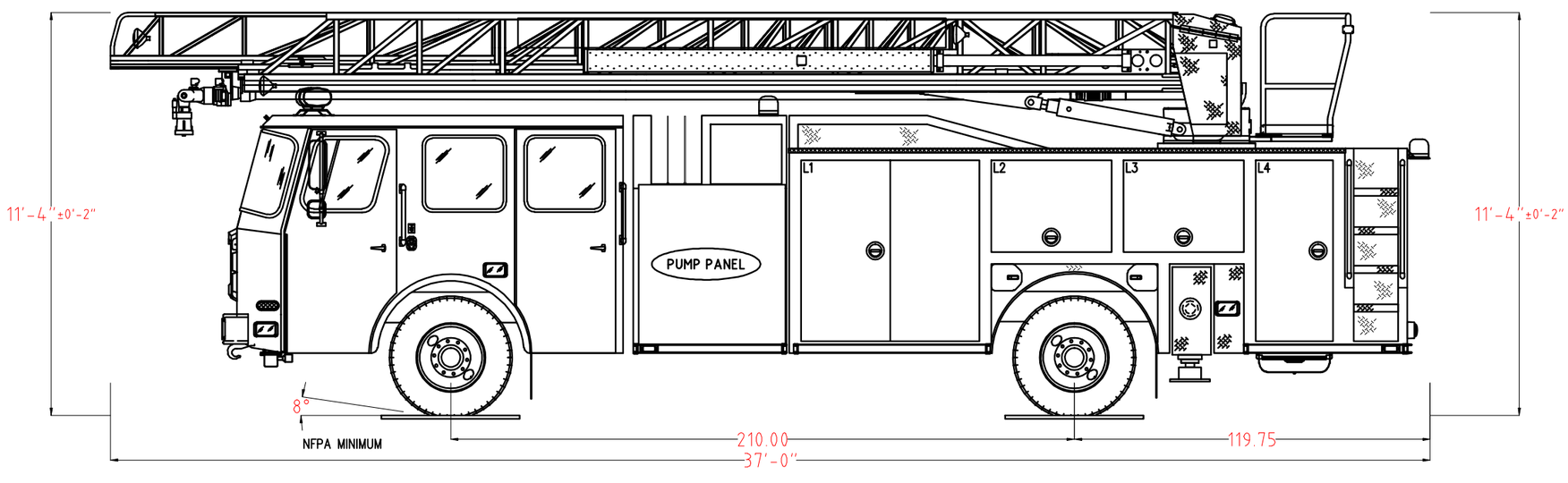

POWERED BY EZDRAW

Notice: This drawing provides a GENERAL REPRESENTATION of the vehicle configuration and should be used for evaluation purposes. The respective dimensions shown,including overall height and length, are estimates and may vary due to manufacturing processes. All other items such as lighting and fixtures, plumbing, compartmentation, and other generally assembled details are shown for REFERENCE ONLY and may not be a direct reflection of the final truck configuration. In ALL situations where this drawing may conflict with the specifications, THE SPECIFICATIONS, AS REFLECTED IN THE APPROVED SHOP ORDER, SHALL PREVAIL. Unless otherwise specified, the proposed apparatus will be manufactured to the latest NFPA recommendations as well as other applicable federally regulated safety regulations. E-One reserves the right to engineer and incorporate design improvements and changes without notice, while adhering to the intent of the specification.

1250 GPM HALE QFLOPUMP
500 TOTAL VOLUME
0 TOTAL FOAM

HOSE LOADS :

	OPENING		INTERIOR DIMENSIONS				
COMPT.	WIDTH	HEIGHT	LOWER WIDTH	LOWER HEIGHT	LOWER DEPTH	UPPER HEIGHT	UPPER DEPTH
L1	60	61	60	61	26	61	24
L2	40.5	31	40.5	31	N/A	31	24
L3	40.5	31	40.5	31	N/A	31	24
L4	26	61	26	61	26	61	24
R1	60	26	60	26	26	26	0
R2	47	26	47	26	26	26	0

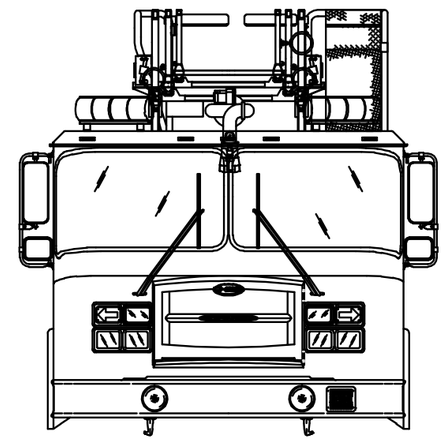

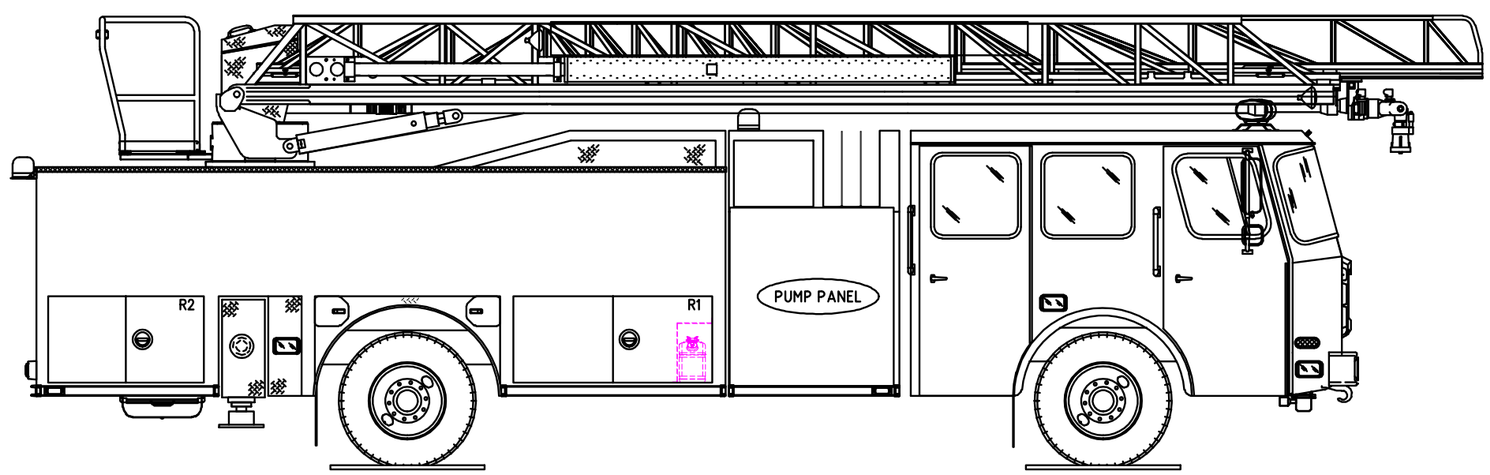

POWERED BY EZDRAW

1000	**CHASSIS**	
1025-0004	Meritor FL941 front axle 18,000lb	11,344.00
1025-0005	Meritor FL941 front axle 18,700lb	14,769.00
1025-0018	Meritor RS-30-185 single rear axle 31,000lb capacity	12,309.00
1025-0027	Driver controlled rear differential	701.00
1025-0028	Koni shock absorbers for front axle - adjustable.	304.00
1025-0029	Front Shock absorbers	163.00
1050-0000	Steel wheels for front axle (2).	287.00
1050-0001	Aluminum wheels for front axle (2).	1,555.00
1050-0002	Steel wheels for rear axle (4).	571.00
1050-0003	Aluminum wheels for rear axle (4).	3,107.00
1050-0007	Front axle wheel trim kit. Includes stainless steel lug nut covers and center cap with E-ONE logo. Note: Center cap will have an inspection port IPO a logo if equipped with Stemco oil seals.	207.00
1050-0008	Rear axle (single) Wheel Trim kit. Includes stainless steel lug nut covers (chrome plated plastic if applicable) and center cap with E-ONE logo. E-ONE custom chassis w/ steel wheels will have chrome plated plastic lug covers.	255.00
1050-0044	Accuride aluminum wheels for front axle (2).	1,510.00
1050-0045	Accuride aluminum wheels for rear axle (4).	3,016.00
1060-0001	Two Michelin 315 tires model XZA-1 for front axle	1,256.00
1060-0006	Four Michelin 315 tires model XZA-1 for rear axle	2,401.00
1060-0017	Four Michelin 315 rear tires with Mud and Snow tread	2,826.00
1060-0047	Two Michelin 385 tires model XFE for front axle.	1,298.00
1060-0050	Tire pressure monitoring valve stem caps.	142.00
1070-0012	Reyco rear suspension springs rated equal to the capacity of the axle.	1,179.00
1100-0000	16-1/2" x 6" S-cam brakes with ArvinMeritor automatic slack adjusters for front axle	269.00
1100-0001	Meritor EX225H 17" disc brakes for front axle.	1,051.00
1100-0002	ArvinMeritor 16-1/2" x 7" S-cam brakes with cast brake drums for a single rear axle	269.00
1100-0005	Brake system air 4X2/4X4	7,120.00
1100-0011	Roll Stability Control, Includes ATC. Not available on commercial chassis, tiller or tandem axle custom chassis	1,703.00
1100-0024	G4 Electronic Stability Control (4x2), Includes RSC and ATC. Not available on 4x4, commercial chassis or tiller.	2,996.00
1110-0002	Air dryer Bendix AD-9	414.00
1110-0005	Auto moisture ejectors heated	360.00
1110-0026	Air horns recessed in bumper (PR)	707.00
1110-0027	Isolated air tank. Includes pressure protection valve.	480.00
1125-0002	Brake Jacob's engine compression	1,500.00
1150-0055	Hinged diamond plate lid for center bumper tray. Includes 1/4 turn latch and gas shock hold open.	254.00
1150-0061	Red vinyl lid with velcro fasteners for bumper tray center.	150.00
1150-0120	Bumper tray center of bumper with slats 12 inches deep (approx 11 inches to slats).	382.00
1160-0000	Bumper 10" stainless steel	1,076.00
1160-0014	20" Front Bumper Gravel Shield Extension.	410.00
1200-0020	Trans Synd synthetic transmission fluid for EVS 3000.	160.00
1200-0116	Eng/Trans Cummins ISL 450HP/EVS3000 2010 EPA compliant engine.	79,280.00
1200-0125	Eng/Trans Cummins ISL 370HP/EVS3000 2010 EPA compliant engine.	77,622.00
1250-0003	Frame 10.25 x 3.5 x .375 chassis.	4,676.00
1250-0006	Frame liner 9.375 X 3.125 X .375.	2,574.00
1350-0003	Fuel system 50 gallon	1,278.00
1350-0005	Fuel system 65 gallons	1,350.00
1350-0011	Fuel pump electric w/reprime	353.00
1350-0013	Fuel water Racor separator to be a bottom drop out style. Shall include indicator light and audible alarm.	616.00
1350-0014	Thermal control in line fuel heater	287.00
1400-0002	Battery four group 31 1000CCA	846.00
1400-0011	Battery Splash Cover for ULC compliance	254.00
1500	**CAB**	
1510-0038	Driver seat 911 air ride.	789.00
1510-0040	Officer seat to be 911 air ride	789.00
1510-0042	Officer seat to be 911 fixed SCBA	766.00
1510-0043	Driver seat to be Bostrom air ride	873.00
1510-0046	Officer seat to be Bostrom air ride SCBA	1,014.00
1510-0047	Officer seat to be Bostrom fixed SCBA	848.00
1510-0050	Rear facing 911 seat with SCBA driver's side	659.00
1510-0053	Rear facing 911 seat with SCBA officer's side	659.00
1510-0054	Rear facing Bostrom seat with SCBA driver's side	635.00
1510-0057	Rear facing Bostrom seat with SCBA officer's side	635.00
1510-0062	Two man bench centered on rear wall with 911 SCBA backs.	1,124.00
1510-0063	Two man bench centered on rear wall with Bostrom SCBA	1,387.00
1510-0126	CrewGuard occupant seating detection system. Display location: [#LOC].	2,906.00
1510-0127	Additional CrewGuard display. Location: [#LOC].	230.00
1515-0017	Air conditioning for the Typhoon X, CII X and Quest with Cummins ISC/ISL engine, radiator mounted condensor.	5,588.00
1520-0012	Typhoon X long cab with 67.5" CA	29,883.00
1520-0013	Typhoon X medium cab with 58" CA	27,745.00
1535-0002	Driver side cab wheel well medical cabinet approximately 42x22(25 Quest)x28. Includes external locking roll-up door and interior hinged door with locking push-button latch. Cabinet includes (2) adjustable shelves.	1,724.00

1535-0003	Officer side cab wheel well medical cabinet approximately 42x22(25 Quest)x28. Includes external locking roll-up door and interior hinged door with locking push-button latch. Cabinet includes (2) adjustable shelves.	1,724.00
1535-0005	Medical cabinet mounted on rear wall of cab 48X40X20 with locking roll up door. Lower door opening raised to provide hand clearance.	3,360.00
1535-0032	All medical cabinet RUD in the cab to be locking with 1250 key	115.00
1540-0006	Map box suspended with drop down doors.	483.00
1550-0009	Fixed rear cab wall narrow windows (pr).	98.00
1550-0011	Rear crew cab door windows. Includes manual roll-down actuation. Not available with paddle style door latching.	928.00
1550-0018	Scuff plates stainless steel (Set). Not available with paddle latches.	90.00
1550-0024	All cab doors shall have paddle latches. Not available on rear doors with roll down windows.	535.00
1550-0054	All cab exterior access doors to have 1250 keyed locks.	496.00
1670-0003	Velvac #2010 mirrors. Door mounted with remote control and heat.	555.00
1670-0010	Pair of Retrac West Coast mirrors mounted on cab doors.	254.00
1670-0013	Both cab mirrors to be heated.	252.00
1670-0038	Lang Mekra mirrors w/LED marker lights and turn signals, remote, heated and convex pair.	1,126.00
1675-0005	Cab roof vent with-out fan (pair).	313.00
1675-0022	Pair of 18" handrails located just behind driver and officer front door one each side	311.00
1675-0023	Pair of 18" handrails located just behind driver and officer rear door (ALS doors if equipped) one each side.	311.00
1675-0030	Mud flaps, front, black with E-ONE logo.	130.00
1675-0093	Grill on side of cab over wheel (PR). Grills are non-venting and for cosmetic purposes only. Includes black-out surface behind grills.	204.00
1680-0001	Block heater 1000 watt	428.00
1680-0005	Thermatic Fan Clutch	1,528.00
1680-0006	Drivelines 1710	885.00
1680-0012	Tow eyes rear frame painted	456.00
1680-0042	Tow hooks front painted in the down position.	230.00
1680-0051	Aerial hydraulic activation system.	1,067.00
1680-0056	Cold weather pkg for cab. Includes (2) 8" fans, fan clutch, additional insulation on the front wall and insulation on rear cab heater hose lines (if equipped).	2,826.00
1685-0057	Heater Rear with Cover (PR) and front heater with heat to the feet for the driver and officer	1,368.00
1685-0094	Storage below rear bench seat. (1) horizontally hinged door on the front of the rear bench seat.	369.00
1700-0005	Alternator Leece Neville 320amp. 320 Amp SAE/275 NFPA Neville	2,726.00
1750-0018	Battery charger Super Smart 20 AMP with 120V Kussmaul air compressor.	1,340.00
1750-0019	Battery charger Super Smart 110 volt, 20 amp.	347.00
1750-0029	Switch horn button two position DOT/air horn	81.00
1750-0030	Switch horn button two position DOT/electronic siren	81.00
1750-0031	Switch horn button two position DOT/Q2B	81.00
1750-0075	English dominant main cab gauge cluster.	1,686.00
1750-0076	Metric dominant main cab gauge cluster.	1,785.00
1750-0166	ATC Override switch.	167.00
1750-0188	DPF Regeneration override switch.	167.00
1800-0005	Cooling system for use with Cyclone II X, Typhoon X, and Quest chassis. Includes coolant recovery system.	5,291.00
1800-0013	Cooling system for use with Cyclone II X, Typhoon X, and Quest chassis. For use with 2010 EPA engines. Includes coolant recovery system.	5,961.00
3000	**BODY**	
3080-0010	Body aerial HP75 / HP78 SideStacker Quest / CII / Typhoon with pump. Single axle. Includes pocket style drop down step at left rear staircase. The rear access doors to match the rear body finish.	40,356.00
3110-0058	Rear of body to have flush un-painted smooth plate body panels to facilitate rear body striping.	1,089.00
3110-0072	Rear of body to have flush painted smooth plate body panels.	1,332.00
3134-0006	The gauge panel on the driver side of the Side Mount module is to be hinged downward. Includes two (2) cable hold opens, and latches.	111.00
3134-0064	The gauge panel(s) on the driver side of the Side Mount module to be hinged upward. Panel(s) to include (2) mechanical/pneumatic (as applicable to panel size) hold opens and latches.	111.00
3136-0004	The lower area of the pump compartment to have a four (4) sided heat pan with two (2) removable (side to side) bottoms. Bottoms to be secured in the closed position with mechanical fasteners.	839.00
3136-0006	Two (2) pump compartment heaters are to be mounted in the pump area. Locate as low as possible.	1,365.00
3136-0011	P-Rubber in flex joint(s) between pump module and/or body modules.	500.00
3305-0001	Cover aluminum (2) piece with recessed handles, SideStacker. Note: This option effects hosebed capacity.	1,573.00
3310-0017	Auxiliary jack pad 24X24 (PR) with side mounted handle. Includes mounting brackets.	968.00
3310-0033	Pikepole/Ladder storage. Available on HP75 SideStacker only. The access door to match the rear body finish.	532.00
3310-0050	Crosslay triple 5.5" wide single stack to hold up to 200' of 2.0" DJ (each) or 150'-200' 2.5" DJ (each). Includes storage pan to rear of crosslays	3,025.00
3310-0053	Crosslay double to hold up to 400' of 2.0" DJ (each). Includes storage pan to rear of crosslays.	2,612.00
3320-0010	SCBA Bottle Storage. (4) Cast Product SCBA bottle storage doors. (2) each side in rear wheel well area. Each tube to include a ribbed rubber insert mounted to rear of tube.	555.00
3320-0020	SCBA Bottle Storage. (4) Fire Shopp SCBA bottle storage with hinged doors with push button latches. (2) officer side and (2) driver side in wheel well area.	1,048.00
3330-0001	Slideout platform-integral driver side running board.	1,166.00
3330-0004	Slideout platform-recessed rear. Located below hosebed. Includes a handrail below hosebed. Requires extended hosebed on HP100, CR100, and 92 Pltfrm SideStacker bodies.	763.00
3330-0029	Intermediate pump panel step officer side with forward tapered corner. Includes (1) lower and (1) upper folding step with (1) handrail and (1) recessed step light located above the intermediate step. Step light to be switched thru work light in cab.	788.00
3340-0015	Diamond plate single axle wheel well. Includes bolt-on composite wheel well liners and aluminum fenderettes.	956.00
3340-0035	Divider Long. To run full length of hosebed (front to rear).	420.00
3340-0093	Mud flaps, rear, black with E-ONE logo.	137.00
3350-0018	12' Lead/Supply Line for low pressure hydraulic reel. To be used with 5,000 PSI hyd reels. Locate [#LOC].	569.00

3370-0031	Storage system for compartment L1. Includes vertical partition 24" from right side wall, (2) adj. tool boards to rear of partition, roll-out tray w/24" 250# slides on floor ahead of partition & fixed shelf at the top of the rear wall offset ahead of partition. HP75 / HP78 SideStacker	2,171.00
4000	**PUMP AND TANK**	
4005-0013	Hale QFLO 750-1250 GPM Pump single stage	25,061.00
4005-0016	Hale QMAX 1500-2250 GPM single stage Pump	30,804.00
4005-0019	Waterous CS 750-1250 single stage Pump	26,675.00
4005-0021	Waterous CSU 1500-2250 GPM single stage Pump	32,631.00
4005-0054	Hale Qflo-23L 1250 pump. Tradition.	16,365.00
4010-0033	500 gallon "T" water tank.	5,999.00
4015-0002	Mechanical Speed Counter for Hale Pumps	267.00
4015-0007	Pump Cooler	138.00
4015-0008	Zinc Anodes for Hale Pump - (Pair) (1) Discharge side and (1) Intake Side	269.00
4015-0026	Electronic Speed Counter for Waterous Pumps	263.00
4015-0039	Pump Seal Mechanical for Waterous Pump	595.00
4015-0044	Anodes for Waterous Pump - (Pair) (1) Discharge side and (1) Intake Side	325.00
4015-0075	Pump Seal Mechanical - Hale. For use with Tradition Hale pumps.	1,967.00
4415-0008	1.5" Front Bumper Discharge Akron Manual Valve	1,317.00
4415-0041	3" Deck Gun Discharge Akron Manual Valve	1,399.00
4415-0051	4" Waterway Discharge with 3" Akron Manual Valve	1,901.00
4430-0014	2.1A Hale Foam Logix Foam System	5,996.00
4430-0015	3.3 Hale Foam Logix Foam System	12,739.00
4430-0079	The foam system performance shall be tested and certified in compliance with 2009 NFPA 1901.	240.00
4435-0001	Class 1 Intelli-Tank Water Tank Level Gauge	409.00
4435-0002	Class 1 Intelli-Tank Foam Tank Level Gauge	422.00
4435-0013	Class 1 Pressure 4.5" Gauge (30-0-600 PSI)	161.00
4435-0014	Dual Read 4.5" Pressure Gauge (30-0-600 psi/100-0-4140 KPA)	241.00
4435-0069	Enfo IV System on Pump Operator's Panel	781.00
4440-0005	2.5" Left Intake Akron Manual Valve	928.00
4440-0006	2.5" Right Intake Akron Manual Valve	928.00
4445-0009	Valve Relief Intake - Akron	384.00
4445-0016	Valve Relief Intake - Hale 2.5"	530.00
4450-0010	2" Tank Fill Akron Manual Valve	922.00
4450-0022	3" Tank to Pump Akron Manual Valve	972.00
4460-0034	Cab jack access door. Located on officer side pump panel in upper rearward area. Includes twist and turn latch.	214.00
4465-0005	Class1 Captain pressure governor.	2,442.00
4475-0000	Pump certification 750-2250 GPM	2,164.00
5000	**ELECTRICAL**	
5010-0003	Multiplex modem kit. Includes cable, modem, and adapter harness.	765.00
5010-0004	Multiplex Data Logger	542.00
5010-0005	Multiplex electrical system for aerials.	4,860.00
5010-0024	Modem for use with the E-ONE multiplex electrical system.	533.00
5110-0017	Back up alarm 97 dB(A).	85.00
5130-0028	Cord reel rollers mounted on reel.	294.00
5150-0006	Whelen 600 series LED horizontal mount taillights. Includes LED stop/tail, arrow turn and halogen backup lights with horizontal Cast 3 housing and weatherproof connectors.	1,132.00
5150-0017	License plate light LED with chrome housing located at the rear of the body.	113.00
5150-0023	Weldon Model 1010 LED / incandescent taillights. Includes red LED stop/tail, amber LED turn and clear incandescent backup.	462.00
5150-0026	Marker light LED body/cab package. E-ONE custom cab with aerial ladder, Mid-Mount platform or Bronto bodies only.	1,207.00
5150-0062	Federal Signal QuadraFlare LED horizontal mount taillights. Includes LED stop/tail, arrow turn and backup lights with horizontal Cast 3 housing and weatherproof connectors.	1,121.00
5255-0001	3rd party generator test with pump.	76.00
5310-0000	Light bar Federal Signal Signal Master SML6.	753.00
5310-0012	Diamond plate shield over rear directional light.	269.00
5310-0022	Light bar Federal Signal Signal Master Cuda LED 34" with 6 lights.	1,299.00
5310-0025	Directional light circuit wiring through upper level warning.	65.00
5380-0009	Compartment light package incandescent for medium bodies.	637.00
5380-0027	Ground light package for cab and body - small.	396.00
5380-0029	Ground light package for cab and body - large.	593.00
5380-0051	Compartment light ROM LED for medical cabinet (EA).	387.00
5390-0002	Hosebed Light Federal Signal GH Scene. Locate at the front area of hosebed. Switched with worklight switch in cab.	196.00
5390-0005	Crosslay light deck Unity. Locate to rear of crosslay (SM) or forward of crosslay (TM).	147.00
5390-0007	Deck/Scene light circuit wiring through chassis reverse. Requires rear deck or scene light.	65.00
5390-0025	Cab scene lights are to be switched with cab doors in addition to standard.	65.00
5400-0003	Engine Compartment Light (EA).	105.00
5400-0010	Incandescent pump compartment light (EA).	114.00
5400-0037	Dome Lts Red/White Incandescent. Package includes two lights mounted in the front and two mounted in the rear of the cab. White light wire through door and light assembly mounted switch. Red light through light assembly mounted switch.	463.00
5400-0039	Spotlight Specialty 2150 hand held located on officer's side of cab dash - hardwired.	324.00
5500-0009	Federal PA300 siren recessed mounted.	592.00
5550-0067	Flash rate for Federal QuadraFlare LED lower level warning lights to be set at pattern 4, alternating quad flash (75 QFPM).	75.00
6000	**AERIAL**	

6300-0002	Monitor Akron electric 1000GPM for ladder. Includes tip and base controls.	9,638.00
6350-0000	Pinned waterway - upgrade. Waterway pins to section 2 or 3 on HP75 / HP78 and pins to section 3 or 4 on HM100 and CR100.	6,223.00
6350-0001	Nozzle Guard.	648.00
6350-0005	Rear 4" NST waterway inlet for rear mounted aerials. Includes chrome cap.	857.00
6350-0006	2.5" Waterway pressure gauge. Locate next to waterway inlet.	165.00
6350-0010	Flowminder with single readout and totalizer for the aerial waterway to be located at the aerial control station.	2,090.00
6400-0006	Breathing air ladder with (1) 444CF cylinder. Includes low air alarm.	7,356.00
6550-0011	Outrigger warning lights (PR). Weldon Model 1010.	94.00
6560-0005	Flood lights Unity at base (PR).	429.00
6560-0028	Grille guard for Magnafire light(s) on aerial.	129.00
6570-0003	110V/15A twist lock receptacle at tip.	2,369.00
6570-0008	Intercom aerial 2-way. Atkinson Dynamics (Federal). Speaker to be located to rear of platform on Bronto units.	1,322.00
6570-0009	Intercom aerial 3-way. Atkinson Dynamics (Federal). Speaker to be located to rear of platform on Bronto units.	2,652.00
6570-0015	110V/20A twist lock receptacle at tip.	2,369.00
6850-0002	Pump panel control station. HP75 / HP78 and 50' rear mount boom.	3,042.00
6850-0004	Short Jack System HP75 / HP78.	7,128.00
6900-0000	Aerial flow test - 3rd party.	381.00
6900-0002	Aerial 2009 NFPA Certification.	3,076.00
7000	**LOOSE EQUIPMENT**	
7600-0005	Pike Pole Fiberglass 6'	116.00
7600-0006	Pike Pole Fiberglass 8'	76.00
7600-0007	Pike Pole Fiberglass 10'	147.00
7600-0008	Pike Pole Fiberglass 12'	157.00
7800-0002	10' Folding Ladder	285.00
7800-0007	Alco-Lite PRL-14 Roof Ladder	370.00
7800-0010	Alco-Lite PRL-16 Roof Ladder	445.00
7800-0016	Alco-Lite PEL-24 Extension Ladder	759.00
7800-0023	Alco-Lite PEL3-35 3 Section Extension Ladder	1,340.00
7800-0031	Little Giant Model 22 Ladder	590.00
7800-0032	Alco-Lite 10' Folding Ladder w/Shoes - FL10 Alco-Lite 10FT folding aluminum ladder with safety shoes.	217.00
7800-0044	Alco-Lite PEL-12 Extension Ladder	510.00
7900-0120	HeartStart OnSite Automated External Defibrillator. Unmounted.	1,759.00
8000	**PAINT, STRIPING, LETTERING**	
8100-0071	Undercoating E-One	248.00
8100-0088	Painted trim stripe on chassis wheels (per axle). Color to be: [#COL]	149.00
8100-0176	Paint E-One chassis cab - Sikkens paint. Color: [#COL].	4,764.00
8100-0177	Cab paint Sikkens two-tone. Upper area of cab to be painted [#COL].	1,072.00
8200-0008	Sign Gold Letter (Each) - 6"	26.00
8200-0012	Sign Gold Letters (60) - 3"	942.00
8200-0015	White Reflective Tape on 2 Outriggers	184.00
8200-0020	Sign Gold Letters (90) - 3".	1,253.00
8200-0022	Shade and outline for lettering.	74.00
9000	**WARRANTY, DOCUMENTATION**	
9300-0038	Manuals, operator, service and exploded view parts CD-ROM.	287.00

Notes:

1) Availability of options are limited by other options selected, and not all options are available in every chassis/apparatus configuration. Selection of an option may require several of the above parts/items to complete the option package.

2) Certain options, alone or in combination with other options, may require heavier axle/suspension packages, longer frames, or reinforced frames at additional cost per the above price list.

3) To configure options, the E-One State Term Schedule authorized dealer will use quote configuration software to select the components necessary to effect the option, feature, or configuration requested and quote the total option price.

Fire Apparatus Quotation for:
STATE OF OHIO TERM SCHEDULE

Quotation Number: 35832 Rev: 31

Unit Description: AERM-TYPH-078L

Quote Description: HP78 Aerial Ladder Quint RM – Typhoon Chassis Salesperson:

Salescode	Extended Description	Qty	
TESTING COMPLIANCE STANDARD			
1001-0015	The E-ONE supplied components of the vehicle shall meet the requirements of NFPA 1901, 2009 edition.	1	
BUMPERS			
1160-0000	Bumper 10" stainless steel	1	
1160-0010	1/8" Front Bumper Gravel Shield.	1	
1160-0013	16" Front Bumper Gravel Shield Extension.	1	
FRAME ASSEMBLY			
1250-0025	Frame 12 x 3.5 x .375 chassis.	1	
1250-0026	Frame liner 11.125 X 3.125 X .375.	1	
AXLE OPTIONS			
1025-0004	Meritor FL941 front axle 18,000lb	1	
1025-0028	Koni shock absorbers for front axle - adjustable.	1	
1025-0087	Dana S35-590 single rear axle 32,500lb capacity. Requires Bendix rear brakes.	1	
SUSPENSIONS			
1070-0012	Reyco rear suspension springs rated equal to the capacity of the axle.	1	
WHEEL OPTIONS			
1050-0044	Accuride aluminum wheels for front axle (2).	1	
1050-0045	Accuride aluminum wheels for rear axle (4).	1	
TIRE OPTIONS			
1060-0001	Two Michelin 315 tires model XZA-1 for front axle	1	
1060-0017	Four Michelin 315 rear tires with Mud and Snow tread	1	

Salescode	Extended Description	Qty	
TIRE OPTIONS			
1060-0050	Tire pressure monitoring valve stem caps.	1	
BRAKE SYSTEMS			
1100-0000	16-1/2" x 6" S-cam brakes with ArvinMeritor automatic slack adjusters for front axle	1	
1100-0005	Brake system air 4X2/4X4	1	
1100-0006	Parking brake release mounted on the driver's side lower dash	1	
1100-0033	Bendix 16-1/2" x 7" S-cam brakes for 32,500 Dana axle.	1	
AIR SYSTEM OPTIONS			
1110-0000-001	Inlet for air system. Location: driver door jamb	1	
1110-0002	Air dryer Bendix AD-9	1	
1110-0006	Air lines nylon	1	
1110-0026	Air horns recessed in bumper (PR)	1	
1110-0027	Isolated air tank. Includes pressure protection valve.	1	
1110-0043	Auxiliary air tank to be plumbed to the following optional accessories (if equipped):Chassis air horns, brake system air outlet, air reel and light tower.	1	
ENGINES & TRANSMISSIONS			
1200-0017	Push button transmission selector	1	
1200-0020	Trans Synd synthetic transmission fluid for EVS 3000.	1	
1200-0096	Electronically limited speed to 60 MPH.	1	
1200-0125	Eng/Trans Cummins ISL 370HP/EVS3000 2010 EPA compliant engine.	1	
SECONDARY BRAKING			
1125-0002	Brake Jacob's engine compression	1	
COOLING PACKAGE			
1800-0013	Cooling system for use with Cyclone II X, Typhoon X, and Quest chassis. For use with 2010 EPA engines. Includes coolant recovery system.	1	
FUEL SYSTEMS			
1350-0003	Fuel system 50 gallon	1	
1350-0013	Fuel water Racor separator to be a bottom drop out style. Shall include indicator light and audible alarm.	1	
1350-0022	Fuel line hose rubber.	1	

Salescode	Extended Description	Qty	
ALTERNATOR			
1700-0005	Alternator Leece Neville 320amp. 320 Amp SAE/275 NFPA Neville	1	
BATTERIES			
1400-0002	Battery four group 31 1000CCA	1	
CHASSIS OPTIONS			
1680-0006	Drivelines 1710	1	
1680-0012	Tow eyes rear frame painted	1	
1680-0042	Tow hooks front painted in the down position.	1	
1680-0051	Aerial hydraulic activation system.	1	
1680-0145-J74	Diesel Exhaust Fluid (DEF) 5 gallon tank. Location: R1 floor offset forward.	1	
CAB MODEL			
1520-0013	Typhoon X medium cab with 58" CA	1	
CAB ROOF TYPE			
1615-0010	Cab roof to be "flat" (non-vista).	1	
CAB BADGE PACKAGE			
1610-0000	Cab and body to have applicable E-ONE logos.	1	
GRILLE			
1620-0004	ABS chrome plated grille.	1	
CAB DOOR OPTIONS			
1550-0003	Rear crew cab doors in the medium position.	1	
1550-0006	Driver and Officer cab door windows. Include rear fixed window.	1	
1550-0011	Rear crew cab door windows. Includes manual roll-down actuation. Not available with paddle style door latching.	1	
1550-0016	Door panels cab ABS	1	
1550-0025	All cab doors shall have "L" style exterior latches.	1	
1550-0027	Front cab door windows to manually roll up.	1	
1550-0037-659	(4) Incandescent cab step area lighting. Locate each light in on each cab door in the inboard position. Lights to be switched with door ajar.	1	
1550-0044	All cab door kick plates to be made from diamond plate aluminum.	1	
1550-0059-000-72	Reflective Yellow/Red striping positioned in the "A" formation located in the lower cab door panels	1	

Salescode	Extended Description	Qty	
MIRRORS			
1670-0003	Velvac #2010 mirrors. Door mounted with remote control and heat.	1	
MISC EXTERIOR CAB OPTIONS			
1550-0020	Windows cab side fixed driver's side	1	
1550-0033	Windows cab side fixed officer's side	1	
1675-0022	Pair of 18" handrails located just behind driver and officer front door one each side	1	
1675-0023	Pair of 18" handrails located just behind driver and officer rear door (ALS doors if equipped) one each side.	1	
1675-0030	Mud flaps, front, black with E-ONE logo.	1	
1675-0047	Rear cab wall to be 3/16" aluminum diamond plate.	1	
HVAC			
1515-0017	Air conditioning for the Typhoon X, CII X and Quest with Cummins ISC/ISL engine, radiator mounted condensor.	1	
SEATS			
1510-0003	Seats 911 Brand.	1	
1510-0007	Seat cover material vinyl.	1	
1510-0008	Seat color gray	1	
1510-0035-147	Universal air pack bottle bracket (EA). Location: officer's seat	1	
1510-0035-148	Universal air pack bottle bracket (EA). Location: rear facing driver's side	1	
1510-0035-151	Universal air pack bottle bracket (EA). Location: inboard driver's side rear wall	1	
1510-0035-152	Universal air pack bottle bracket (EA). Location: inboard officer's side rear wall	1	
1510-0035-215	Universal air pack bottle bracket (EA). Location: rear facing officer's side	1	
1510-0038	Driver seat 911 air ride.	1	
1510-0042	Officer seat to be 911 fixed SCBA	1	
1510-0050	Rear facing 911 seat with SCBA driver's side	1	
1510-0053	Rear facing 911 seat with SCBA officer's side	1	
1510-0062	Two man bench centered on rear wall with 911 SCBA backs.	1	
1685-0033	Seating capacity tag of six occupants.	1	
MISC INTERIOR CAB OPTIONS			
1685-0000	Cab interior gray. Does not include engine cover or seat color.	1	
1685-0006	Padded sun visors, driver and officer's side overhead	1	

Salescode	Extended Description	Qty	
MISC INTERIOR CAB OPTIONS			
1685-0057	Heater Rear with Cover (PR) and front heater with heat to the feet for the driver and officer	1	
1685-0116	Interior grab handle rubber covered (2). Locate one each side at interior of front cab door opening (at rear of opening).	1	
CAB ELECTRICAL OPTIONS			
1750-0019	Battery charger Super Smart 110 volt, 20 amp.	1	
1750-0029	Switch horn button two position DOT/air horn	1	
1750-0046-195	Cab Headlights. Position: lower	1	
1750-0059-179-04	Receptacle inlet 20amp with a Yellow cover. Location: outside driver's door next to handrail	1	
1750-0072-593	12 volt electrical outlet in the cab wired battery hot. Location: officer side dash.	2	
1750-0075	English dominant main cab gauge cluster.	1	
1750-0083-172	Turn signal Federal Signal QuadraFlare QL64Z-ARROW LED amber pair located upper headlight bezel	1	
1750-0188	DPF Regeneration override switch.	1	
1750-0198-A31	Battery charger to be located behind driver's seat.	1	
5400-0037	Dome Lts Red/White Incandescent. Package includes two lights mounted in the front and two mounted in the rear of the cab. White light wire through door and light assembly mounted switch. Red light through light assembly mounted switch.	1	
BODY MODEL			
3080-0064	Body aerial HP75 / HP78 SideStacker Quest / CII / Typhoon with pump. Single axle. Includes extended R1 compt and pocket style drop down step at left rear staircase. The rear access doors to match the rear body finish.	1	
BODY COMPT REAR			
3110-0058	Rear of body to have flush un-painted smooth plate body panels to facilitate rear body striping.	1	
AERIAL BODY OPTIONS			
3310-0017	Auxiliary jack pad 24X24 (PR) with side mounted handle. Includes mounting brackets.	1	
3310-0050	Crosslay triple 5.5" wide single stack to hold up to 200' of 2.0" DJ (each) or 150'-200' 2.5" DJ (each). Includes storage pan to rear of crosslays	1	
3310-0097	Hosebed depth 26" HP75 / HP78 SideStacker with tall R1. Will hold up to 800' of 5" LDH and up to 300-400' of 2.5 or 3" DJ. Capacity will be reduced with diamond plate covers.	1	

Salescode	Extended Description	Qty	
AERIAL BODY OPTIONS			
3310-0128	Pikepole/Ladder storage. Available on HP75 SideStacker with tall R1 only. The access door to match the rear body finish.	1	
DOORS			
3300-0007-006	Door single vertically hinged painted. Location(s): L4	1	
3300-0008-004	Door double vertically hinged painted. Location(s): L2	1	
3300-0008-005	Door double vertically hinged painted. Location(s): L3	1	
3300-0008-016	Door double vertically hinged painted. Location(s): R2	1	
3300-0030-003	Door double 3-point vertically hinged painted. Location(s): L1	1	
3300-0030-015	Door double 3-point vertically hinged painted. Location(s): R1	1	
COMPARTMENT DIVIDERS			
3370-0031	Storage system for compartment L1. Includes vertical partition 24" from right side wall, (2) adj. tool boards to rear of partition, roll-out tray w/24" 250# slides on floor ahead of partition & fixed shelf at the top of the rear wall offset ahead of partition. HP75 / HP78 SideStacker	1	
COVERS			
3305-0007-000-02	Vinyl Red hosebed cover with attached rear flap(s).	1	
3305-0008-000-02	Vinyl Red crosslay cover with attached side flaps.	1	
PUMP MODULE			
3130-0080	Pump panel opening is 57" wide.	1	
PUMP PANELS			
3134-0012	Officer side upper pump access panel to be horizontally hinged with diamond plate door. Includes (2) push button latches and (2) hold open devices.	1	
3134-0016	Stainless steel driver and officer side pump panels.	1	
3134-0064	The gauge panel(s) on the driver side of the Side Mount module to be hinged upward. Panel(s) to include (2) mechanical/pneumatic (as applicable to panel size) hold opens and latches.	1	
MISC PUMP PANEL OPTIONS			
4460-0003	Pump Panel Tags Color Coded per NFPA Compliance	1	
WATER TANK			
4010-0033	500 gallon "T" water tank.	1	

Salescode	Extended Description	Qty	
TANK PLUMBING			
4450-0010	2" Tank Fill Akron Manual Valve	1	
4450-0022	3" Tank to Pump Akron Manual Valve	1	
LADDER STORAGE / RACKS			
3365-0167-C85	Dual ladder tunnel for HP75 / HP78 SideStacker with tall R1 compartment. Ladder rack to hold: PEL3-35, PEL-28 and PRL-16	1	
HANDRAILS / STEPS			
3330-0002-050	Slideout platform-rollerless. Includes chrome grab handle centered on the frt face of the platform. Located below driver side pump panel.	1	
3330-0007-060	Folding Step. Location officer side front compartment face. Each location requires a minimum of (1) handrail per NFPA.	3	
3330-0007-062	Folding Step. Location driver side front compartment face. Each location requires a minimum of (1) handrail per NFPA.	3	
MISC BODY OPTIONS			
3090-0001	Hosebed capacity aerial. Provide standard size hosebed.	1	
3090-0002	The unit has no overall height restrictions.	1	
3090-0004	The unit has no overall length restrictions.	1	
3340-0015	Diamond plate single axle wheel well. Includes bolt-on composite wheel well liners and aluminum fenderettes.	1	
3340-0093	Mud flaps, rear, black with E-ONE logo.	1	
3340-0270	The painted aerial body side panels shall be smooth / flush. Applies to SideStacker HB side, panels next to water tank on MM, and upper body sides on RLP.	1	
PUMPS			
4005-0016	Hale QMAX 1500-2250 GPM single stage Pump	1	
4005-0031	Rating 1500 GPM	1	
PUMP CERTIFICATION			
4475-0000	Pump certification 750-2250 GPM	1	
PUMP OPTIONS			
4015-0007	Pump Cooler	1	
4015-0008	Zinc Anodes for Hale Pump - (Pair) (1) Discharge side and (1) Intake Side	1	
4015-0022	Pump Seal Mechanical - Hale	1	
4015-0052-198	Steamers to be Flush Location: driver's side.	1	

Salescode	Extended Description	Qty	
PUMP OPTIONS			
4015-0052-199	Steamers to be Flush Location: officer's side.	1	
4015-0073	Manual operated master pump drain. The master drain shall be clearly marked and placed in accessible location rearward below running board on driver side or L1 compartment..	1	
INTAKES			
4440-0005	2.5" Left Intake Akron Manual Valve	1	
INTAKE OPTIONS			
4445-0009	Valve Relief Intake - Akron	1	
DISCHARGES AND PRECONNECTS			
4415-0012-654	1.5" Crosslay with Akron Manual Valve. Location: crosslay 1 & 2	2	
4415-0034-583	3" Right Pump Panel Discharge Akron Manual Valve Location: right side discharge 1	1	
4415-0051	4" Waterway Discharge with 3" Akron Manual Valve	1	
4415-0058-655	2.5" Crosslay Akron Manual Valve. To be located rearward of 1.5" crosslay(s) if applicable. Location: crosslay 3	1	
4415-0161-581	2.5" Left Panel Discharge Akron Manual Valve w/30 Degree Droop Location: left side discharge 1	1	
4415-0161-582	2.5" Left Panel Discharge Akron Manual Valve w/30 Degree Droop Location: left side discharge 2	1	
4415-0164-584	2.5" Right Panel Discharge Akron Manual Valve w/30 Degree Droop Location: right side discharge 2	1	
DISCHARGE OPTIONS			
4417-0058-359	Bleeder Drain Valve Plumbed to: waterway discharge	1	
4417-0058-573	Bleeder Drain Valve Plumbed to: crosslay preconnect	3	
4417-0058-575	Bleeder Drain Valve Plumbed to: left discharge	2	
4417-0058-576	Bleeder Drain Valve Plumbed to: right discharge	2	
PRESSURE GOVERNORS			
4465-0005	Class1 Captain pressure governor.	1	
GAUGES			
4435-0001	Class 1 Intelli-Tank Water Tank Level Gauge	1	
4435-0013	Class 1 Pressure 4.5" Gauge (30-0-600 PSI)	2	

Salescode	Extended Description	Qty	
GAUGES			
4435-0015-352	2.5" Class 1 Pressure Gauge (30-0-600). Discharge: 1.5 in. crosslay preconnect	2	
4435-0015-353	2.5" Class 1 Pressure Gauge (30-0-600). Discharge: 2.5 in. crosslay preconnect	1	
4435-0015-359	2.5" Class 1 Pressure Gauge (30-0-600). Discharge: waterway discharge	1	
4435-0015-581	2.5" Class 1 Pressure Gauge (30-0-600). Discharge: left side discharge 1	1	
4435-0015-582	2.5" Class 1 Pressure Gauge (30-0-600). Discharge: left side discharge 2	1	
4435-0015-583	2.5" Class 1 Pressure Gauge (30-0-600). Discharge: right side discharge 1	1	
4435-0015-584	2.5" Class 1 Pressure Gauge (30-0-600). Discharge: right side discharge 2	1	
4435-0069	Enfo IV System on Pump Operator's Panel	1	
ELECTRICAL SYSTEMS			
5010-0003	Multiplex modem kit. Includes cable, modem, and adapter harness.	1	
5010-0004	Multiplex Data Logger	1	
5010-0005	Multiplex electrical system for aerials.	1	
5010-0013-E91	Vehicle data recorder - 2009 NFPA compliant. Includes occupant detection with display. Display location: Driver side of center dash electrical cover.	1	
LIGHT BARS			
5300-0015-034	Light bar Federal Signal ADX2201 LED (PR) with red lenses. Location: front cab corners	1	
WARNING LIGHT PACKAGES			
5550-0055-537	Federal Signal QuadraFlare LED lower level warning light package. Includes (10) QL64XF-R LED light heads with bezels. Locate side facing lights: at forward most position, on side of cab down low just ahead of rear door, and on rear fixed outrigger cover.	1	
5550-0067	Flash rate for Federal QuadraFlare LED lower level warning lights to be set at pattern 4, alternating quad flash (75 QFPM).	1	
WARNING LIGHTS			
5600-0034-268-09	Federal Model SY12FS Sentry (PR) with driver amber, officer red domes. Location: each side of pump module offset to the rear.	1	
5600-0034-479-09	Federal Model SY12FS Sentry (PR) with driver amber, officer red domes. Location: rear upper body on aerial style brackets.	1	
5600-0149-170	Hazard (door ajar) light 2.5" incandescent. Location: center overhead	1	
SIRENS			
5500-0009	Federal PA300 siren recessed mounted.	1	

Salescode	Extended Description	Qty	
SIRENS			
5500-0024-170	The electronic siren control is to be located on the center overhead.	1	
SPEAKERS			
5510-0029-209	Speaker Federal Dynamax ES100-EF thru bumper. Location: driver side front bumper.	1	
DOT LIGHTING			
5150-0017	License plate light LED with chrome housing located at the rear of the body.	1	
5150-0026	Marker light LED body/cab package. E-ONE custom cab with aerial ladder, Mid-Mount platform or Bronto bodies only.	1	
5150-0061	Federal Signal QuadraFlare LED horizontal mount taillights. Includes LED stop/tail, turn and backup lights with horizontal Cast 3 housing and weatherproof connectors.	1	
LIGHTS - COMPARTMENT, STEP & GROUND			
5380-0009	Compartment light package incandescent for medium bodies.	1	
5380-0029	Ground light package for cab and body - large.	1	
5380-0035	Step light package body - large.	1	
LIGHTS - DECK AND SCENE			
5390-0003	Hosebed light Trucklite. Locate center front of hosebed. Switched with work light switch in cab.	1	
5390-0008-445	Federal Signal GH Scene lights (PR). Switch in cab (driver and officer side facing lights switched separately). Locate up high on rear access door	1	
5390-0022	Crosslay light Trucklite. Locate to rear of crosslay (SM) and forward of crosslay (TM as applicable). Switched with work light switch in cab.	1	
LIGHTS - NON-WARNING			
5400-0003	Engine Compartment Light (EA).	1	
5400-0008	(1) pump panel light over the pump control area to be wired to come on when pump shift is placed to pump.	1	
5400-0010	Incandescent pump compartment light (EA).	1	
5400-0039	Spotlight Specialty 2150 hand held located on officer's side of cab dash - hardwired.	1	
5400-0047	Pump panel light package with (3) lights per side pump panel. Pump panels over 45" may require additional lights. Side mount only.	1	
CONTROLS / SWITCHES			
5100-0000-199	Foot Switch to control air horns located officer's side	1	

Salescode	Extended Description	Qty	
CONTROLS / SWITCHES			
5100-0007-198	Foot Switch to control electronic siren located driver's side	1	
MISC ELECTRICAL			
1750-0082-762	12V power distribution module. Includes (6) battery hot and (6) switched hot circuits. 100 amps max (IATS). Location: behind officer's seat	1	
5110-0017	Back up alarm 97 dB(A).	1	
AERIAL MODEL			
6100-0028	Ladder HP78 750 lb tip load with waterway. Includes left side console with cover, split steps at tip and jack leg flood lights.	1	
AERIAL HYDRAULIC SYSTEM OPTIONS			
6150-0003-216	Gauge aerial hydraulic oil level. Electronic display to be located on pump operators panel.	1	
MONITORS			
6300-0002	Monitor Akron electric 1000GPM for ladder. Includes tip and base controls.	1	
6300-0017	Monitor painted silver from OEM.	1	
AERIAL WARNING LIGHTS			
6550-0001	Outrigger warning lights (PR) LED. Trucklite Model 91R	1	
AERIAL LIGHTING			
6560-0002-231	Spot light 12V located left side tip.	1	
6560-0002-232	Spot light 12V located right side tip.	1	
6560-0005	Flood lights Unity at base (PR).	1	
WATERWAY OPTIONS			
6350-0000	Pinned waterway - upgrade. Waterway pins to section 2 or 3 on HP75 / HP78 and pins to section 3 or 4 on HM100 and CR100.	1	
6350-0005	Rear 4" NST waterway inlet for rear mounted aerials. Includes chrome cap.	1	
6350-0006	2.5" Waterway pressure gauge. Locate next to waterway inlet.	1	
6350-0010	Flowminder with single readout and totalizer for the aerial waterway to be located at the aerial control station.	1	
MISC AERIAL ELECTRICAL			
6570-0008	Intercom aerial 2-way. Atkinson Dynamics (Federal). Speaker to be located to rear of platform on Bronto units.	1	

Salescode	Extended Description	Qty	
AERIAL EQUIPMENT			
6500-0011-139	Pike pole tube for 6' pole on ladder. Location: right side fly section.	1	
6500-0019-138	Axe bracket mounted on aerial. Location: left side fly section	1	
AERIAL LADDER BRACKETS			
6600-0002-250	Roof ladder bracket J style mount. Locate outside base section for a PRL-16 on left side of base section. Available on HP75/78, HP100, and HP95.	1	
SIGN PLATES			
6750-0004-000-39	Aerial sign plates 12 x 144 (PR). Available on HP78, HP100 and HP100 platform only. Does not include lettering. Color: Job Color	1	
AERIAL TESTING			
6900-0000	Aerial flow test - 3rd party.	1	
6900-0002	Aerial 2009 NFPA Certification.	1	
HAND TOOLS			
7600-0005	Pike Pole Fiberglass 6'	2	
7600-0006	Pike Pole Fiberglass 8'	2	
7600-0008	Pike Pole Fiberglass 12'	2	
GROUND LADDERS			
7800-0010	Alco-Lite PRL-16 Roof Ladder	2	
7800-0021	Alco-Lite PEL-28 Extension Ladder	1	
7800-0023	Alco-Lite PEL3-35 3 Section Extension Ladder	1	
7800-0032	Alco-Lite 10' Folding Ladder w/Shoes - FL10 Alco-Lite 10FT folding aluminum ladder with safety shoes.	1	
MISC LOOSE EQUIPMENT			
7600-0016	Wheel Chocks 44" NFPA Complaint - Pair of Zico SAC-44. Up to 44" diameter Tires. Includes mounting bracket.	4	
7900-0014	DOT Required Drive Away Kit - Kit includes three (3) triangular warning reflectors with carrying case. This kit is for the end user and is to remain with the truck.	1	
EXTERIOR PAINT			
8100-0089	All applicable pump/pre-connect application modules are to have a sanded finish (not painted job color). Includes upper and lower pump modules, crosswalk module and/or speedlay/pre-connect module (as applicable). Rear mounted body/pump module to be painted job color.	1	

Salescode	Extended Description	Qty	
EXTERIOR PAINT			
8100-0116	Rear body surface to have a sanded finish (not painted job color). Includes hinged doors that do not have discrete sales codes and removable panels.	1	
8100-0176-000-17	Paint E-One chassis cab - Sikkens paint. Color: FLNA3225 Red.	1	
8100-0183-000-17	Paint Body - Large - For Aerials, T/A Tankers, Rear Mounts and Rescues. Sikkens paint. Color: FLNA3225 Red.	1	
INTERIOR PAINT			
8150-0010	The interior of the cab to be paint OTO gray	1	
LETTERING			
8200-0011-000-41	Scotchlite Letters (60) - 3". Color Gold.	1	
8200-0022	Shade and outline for lettering.	1	
8200-0023	Lettering Instructions:	1	Per FD Instruction
8200-0033-000-41	Scotchlite Letter (Each) - 8". Color Gold.	36	
STRIPING			
8200-0015	White Reflective Tape on 2 Outriggers	1	
8300-0002-333-12	NFPA Scotchlite Stripe - 4" wide and straight on front/sides of cab and sides/rear of body. Color: White. Location: top of stripe flush with top of bumper and straight back.	1	
8300-0042	White rubrail scotchlite insert.	1	
8300-0084-000-72	Chevron "A" style 6" printed sheet Scotchlite striping on rear of body. Includes rear facing extrusions, panels and doors inboard/outboard of the beavertails(if applicable). Colors to be Yellow/Red.	1	
WARRANTY / STANDARD & EXTENDED			
9100-0000	Standard 1 Year Warranty	1	
9100-0003	Lifetime Frame Warranty	1	
9100-0004	10 Year/100,000 Mile Structural Warranty - Statement of Warranty	1	
9100-0005	10 Year Stainless Steel Plumbing Warranty - Statement of Warranty	1	
9100-0007	20 Year Aerial Device Structural Warranty - Integrity Limited Warranty	1	
9100-0019	10 Year Limited Paint and Perforation Warranty - For Sikkens Paint	1	
SUPPORT, DELIVERY, INSPECTIONS AND MANUALS			
9300-0000	Vehicle familiarization aerial (Domestic).	1	
9300-0016	Approval Drawings-Standard	1	

Salescode	Extended Description	Qty	
SUPPORT, DELIVERY, INSPECTIONS AND MANUALS			
9300-0038	Manuals, operator, service and exploded view parts CD-ROM.	1	
PRICE			$567,502.

STATE OF OHIO TERM SCHEDULE

4200 SURFACE RD
COLUMBUS, OH 43228

Quote No: 35832

1/7/2010

Quote Rev:31 Drawing Rev:2

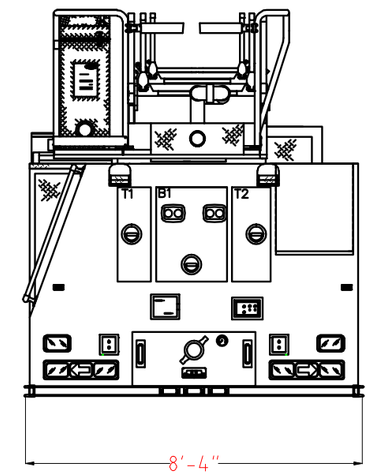

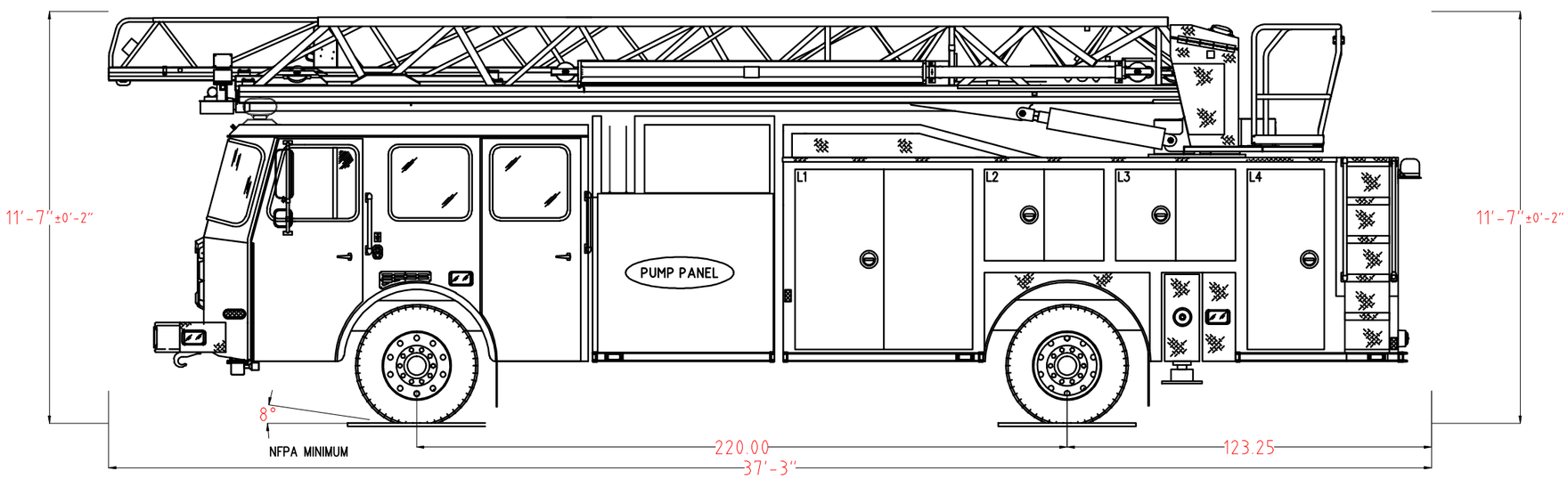

POWERED BY EZDRAW

Notice: This drawing provides a GENERAL REPRESENTATION of the vehicle configuration and should be used for evaluation purposes. The respective dimensions shown,including overall height and length, are estimates and may vary due to manufacturing processes. All other items such as lighting and fixtures, plumbing, compartmentation, and other generally assembled details are shown for REFERENCE ONLY and may not be a direct reflection of the final truck configuration. In ALL situations where this drawing may conflict with the specifications, THE SPECIFICATIONS, AS REFLECTED IN THE APPROVED SHOP ORDER, SHALL PREVAIL. Unless otherwise specified, the proposed apparatus will be manufactured to the latest NFPA recommendations as well as other applicable federally regulated safety regulations. E-One reserves the right to engineer and incorporate design improvements and changes without notice, while adhering to the intent of the specification.

	HOSE LOADS :
1500 GPM HALE QMAXPUMP 500 TOTAL VOLUME 0 TOTAL FOAM	

	OPENING		INTERIOR DIMENSIONS				
COMPT.	WIDTH	HEIGHT	LOWER WIDTH	LOWER HEIGHT	LOWER DEPTH	UPPER HEIGHT	UPPER DEPTH
L1	60	61	60	61	26	61	24
L2	40.5	31	40.5	31	N/A	31	24
L3	40.5	31	40.5	31	N/A	31	24
L4	26	61	26	61	26	61	24
R1	60	61	60	61	26	61	23
R2	47	26	47	26	26	26	0

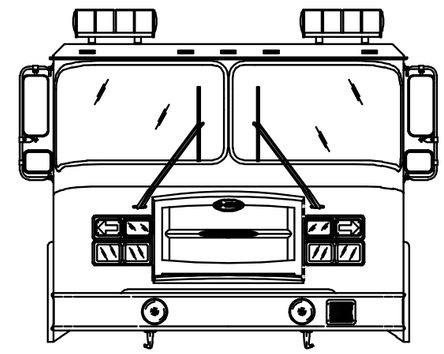

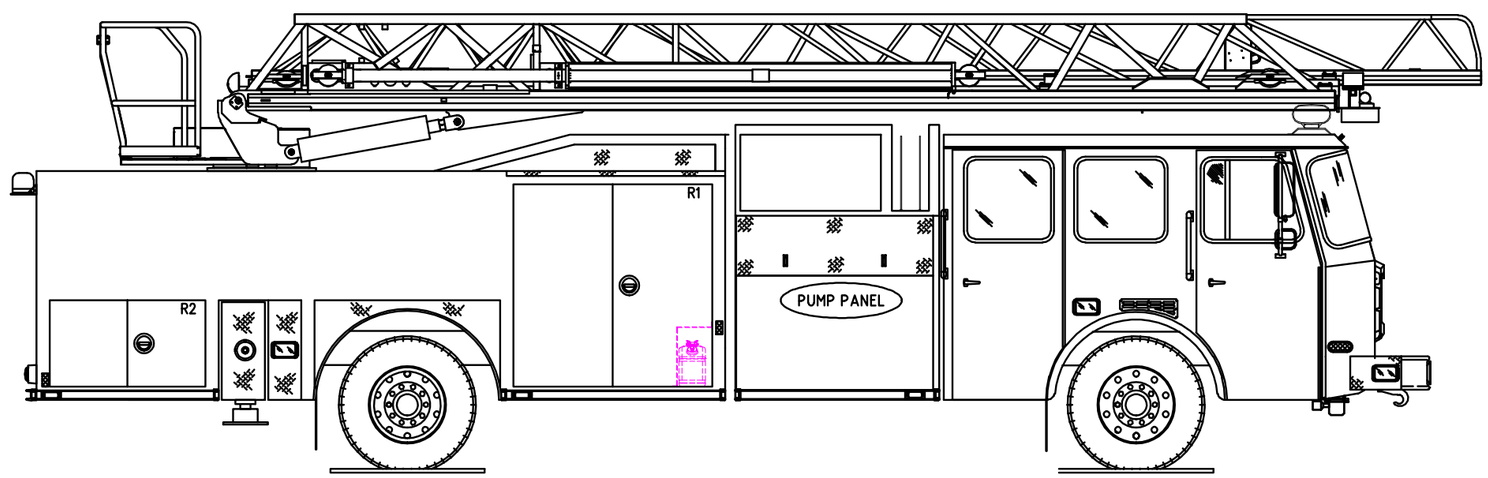

POWERED BY
EZDRAW

Fire Apparatus Quotation for:
STATE OF OHIO TERM SCHEDULE

Quotation Number: 35836 Rev: 27

Unit Description: AERM-CYC2-100L

Quote Description: HP100L Aerial Ladder Quint RM - Cyclone II Chassis

Salesperson:

Salescode	Extended Description	Qty	
TESTING COMPLIANCE STANDARD			
1001-0015	The E-ONE supplied components of the vehicle shall meet the requirements of NFPA 1901, 2009 edition.	1	
BUMPERS			
1160-0000	Bumper 10" stainless steel	1	
1160-0010	1/8" Front Bumper Gravel Shield.	1	
1160-0013	16" Front Bumper Gravel Shield Extension.	1	
FRAME ASSEMBLY			
1250-0005	Frame - Torque box for tandem axle RM aerial.	1	
AXLE OPTIONS			
1025-0012	Meritor FL943 front axle 21,000lb	1	
1025-0021	Meritor RT-46-160 rear tandem axle 48,000lb capacity	1	
1025-0028	Koni shock absorbers for front axle - adjustable.	1	
SUSPENSIONS			
1070-0002	Rear suspension springs rated equal to the capacity of the axles	1	
WHEEL OPTIONS			
1050-0001	Aluminum wheels for front axle (2).	1	
1050-0005	Aluminum wheels for rear axles (8).	1	
TIRE OPTIONS			
1060-0022	Eight Michelin 12R rear tires with Mud and Snow tread	1	
1060-0046	Two Michelin 425 tires model XFE for front axle.	1	
1060-0050	Tire pressure monitoring valve stem caps.	1	

Salescode	Extended Description	Qty	
BRAKE SYSTEMS			
1100-0000	16-1/2" x 6" S-cam brakes with ArvinMeritor automatic slack adjusters for front axle	1	
1100-0006	Parking brake release mounted on the driver's side lower dash	1	
1100-0008	Brake system air 6X4.	1	
1100-0014	ArvinMeritor 16-1/2" x 7" S-cam brakes with cast brake drums for a tandem rear axle	1	
AIR SYSTEM OPTIONS			
1110-0000-001	Inlet for air system. Location: driver door jamb	1	
1110-0002	Air dryer Bendix AD-9	1	
1110-0006	Air lines nylon	1	
1110-0026	Air horns recessed in bumper (PR)	1	
1110-0027	Isolated air tank. Includes pressure protection valve.	1	
1110-0043	Auxiliary air tank to be plumbed to the following optional accessories (if equipped):Chassis air horns, brake system air outlet, air reel and light tower.	1	
ENGINES & TRANSMISSIONS			
1200-0017	Push button transmission selector	1	
1200-0021	Trans Synd synthetic transmission fluid for EVS 4000.	1	
1200-0059	Eng/Trans Cummins ISM 450HP/EVS4000 2007 EPA Compliant Engine	1	
1200-0096	Electronically limited speed to 60 MPH.	1	
SECONDARY BRAKING			
1125-0002	Brake Jacob's engine compression	1	
COOLING PACKAGE			
1800-0005	Cooling system for use with Cyclone II X, Typhoon X, and Quest chassis. Includes coolant recovery system.	1	
FUEL SYSTEMS			
1350-0003	Fuel system 50 gallon	1	
1350-0011	Fuel pump electric w/reprime	1	
1350-0013	Fuel water Racor separator to be a bottom drop out style. Shall include indicator light and audible alarm.	1	
1350-0022	Fuel line hose rubber.	1	
ALTERNATOR			

Salescode	Extended Description	Qty	
ALTERNATOR			
1700-0005	Alternator Leece Neville 320amp. 320 Amp SAE/275 NFPA Neville	1	
BATTERIES			
1400-0002	Battery four group 31 1000CCA	1	
CHASSIS OPTIONS			
1680-0007	Drivelines 1810. Required on 1550 lb/ft torque engines	1	
1680-0008	Tow eyes front painted below bumper / cab (PR).	1	
1680-0012	Tow eyes rear frame painted	1	
1680-0051	Aerial hydraulic activation system.	1	
CAB MODEL			
1520-0008	Cyclone II X medium cab with 58" CA	1	
CAB ROOF TYPE			
1615-0004	Cab roof to be "flat" with trough for waterway. Required with HM100 (with waterway), HP100 (all), CR100/92 Pltfm (SdStckr and W/O/P) or HP100 Pltfrm (all).	1	
CAB BADGE PACKAGE			
1610-0000	Cab and body to have applicable E-ONE logos.	1	
CAB DOOR OPTIONS			
1550-0003	Rear crew cab doors in the medium position.	1	
1550-0006	Driver and Officer cab door windows. Include rear fixed window.	1	
1550-0011	Rear crew cab door windows. Includes manual roll-down actuation. Not available with paddle style door latching.	1	
1550-0016	Door panels cab ABS	1	
1550-0025	All cab doors shall have "L" style exterior latches.	1	
1550-0027	Front cab door windows to manually roll up.	1	
1550-0037-659	(4) Incandescent cab step area lighting. Locate each light in on each cab door in the inboard position. Lights to be switched with door ajar.	1	
1550-0044	All cab door kick plates to be made from diamond plate aluminum.	1	
1550-0059-000-72	Reflective Yellow/Red striping positioned in the "A" formation located in the lower cab door panels	1	
MIRRORS			
1670-0003	Velvac #2010 mirrors. Door mounted with remote control and heat.	1	

Salescode	Extended Description	Qty	
MISC EXTERIOR CAB OPTIONS			
1550-0020	Windows cab side fixed driver's side	1	
1550-0033	Windows cab side fixed officer's side	1	
1675-0022	Pair of 18" handrails located just behind driver and officer front door one each side	1	
1675-0023	Pair of 18" handrails located just behind driver and officer rear door (ALS doors if equipped) one each side.	1	
1675-0030	Mud flaps, front, black with E-ONE logo.	1	
1675-0047	Rear cab wall to be 3/16" aluminum diamond plate.	1	
HVAC			
1515-0018	Air conditioning for the CII X and Quest with Cummins ISM or Detroit Diesel Series 60 engine, roof top mounted condensor.	1	
SEATS			
1510-0003	Seats 911 Brand.	1	
1510-0007	Seat cover material vinyl.	1	
1510-0008	Seat color gray	1	
1510-0035-147	Universal air pack bottle bracket (EA). Location: officer's seat	1	
1510-0035-148	Universal air pack bottle bracket (EA). Location: rear facing driver's side	1	
1510-0035-151	Universal air pack bottle bracket (EA). Location: inboard driver's side rear wall	1	
1510-0035-152	Universal air pack bottle bracket (EA). Location: inboard officer's side rear wall	1	
1510-0035-215	Universal air pack bottle bracket (EA). Location: rear facing officer's side	1	
1510-0038	Driver seat 911 air ride.	1	
1510-0042	Officer seat to be 911 fixed SCBA	1	
1510-0050	Rear facing 911 seat with SCBA driver's side	1	
1510-0053	Rear facing 911 seat with SCBA officer's side	1	
1510-0062	Two man bench centered on rear wall with 911 SCBA backs.	1	
1685-0033	Seating capacity tag of six occupants.	1	
MISC INTERIOR CAB OPTIONS			
1685-0000	Cab interior gray. Does not include engine cover or seat color.	1	
1685-0005	Lexan sun visors, driver and officer's side overhead	1	
1685-0057	Heater Rear with Cover (PR) and front heater with heat to the feet for the driver and officer	1	
1685-0116	Interior grab handle rubber covered (2). Locate one each side at interior of front	1	

Salescode	Extended Description	Qty	
MISC INTERIOR CAB OPTIONS			
	cab door opening (at rear of opening).		
CAB ELECTRICAL OPTIONS			
1750-0019	Battery charger Super Smart 110 volt, 20 amp.	1	
1750-0029	Switch horn button two position DOT/air horn	1	
1750-0046-195	Cab Headlights. Position: lower	1	
1750-0059-179-04	Receptacle inlet 20amp with a Yellow cover. Location: outside driver's door next to handrail	1	
1750-0072-593	12 volt electrical outlet in the cab wired battery hot. Location: officer side dash.	2	
1750-0075	English dominant main cab gauge cluster.	1	
1750-0083-172	Turn signal Federal Signal QuadraFlare QL64Z-ARROW LED amber pair located upper headlight bezel	1	
1750-0198-A31	Battery charger to be located behind driver's seat.	1	
5400-0037	Dome Lts Red/White Incandescent. Package includes two lights mounted in the front and two mounted in the rear of the cab. White light wire through door and light assembly mounted switch. Red light through light assembly mounted switch.	1	
BODY SPEC			
3090-0000	Body Specs - SideStacker aerial with tandem axle. Includes left rear staircase with pocket style drop down step.	1	
BODY COMPT REAR			
3110-0058	Rear of body to have flush un-painted smooth plate body panels to facilitate rear body striping.	1	
AERIAL BODY OPTIONS			
3310-0001	Compartments driver side tandem axle HP SideStacker. Includes rescue style extended height compartments.	1	
3310-0008	Compartments officer side tandem axle HP SideStacker. Includes rescue style extended height compartments ahead of wheel well with extended hosebed.	1	
3310-0032	Recessed tubes for (6) pike poles. Not available on HP75 SideStacker.	1	
3310-0036	Rollup rear ladder compartment door with satin finish for SideStacker aerial. Includes hinged ladder retention plate.	1	
3310-0049	Auxiliary jack pad 24X24 (4) with side mounted handles. Includes welded mounting brackets.	1	
3310-0052	Crosslay double 5.5" wide single stack to hold up to 200' of 2.0" DJ (each) or 150'-200' 2.5" DJ (each). Includes storage pan to rear of crosslays.	1	

Salescode	Extended Description	Qty	
DOORS			
3300-0007-003	Door single vertically hinged painted. Location(s): L1	1	
3300-0007-004	Door single vertically hinged painted. Location(s): L2	1	
3300-0007-007	Door single vertically hinged painted. Location(s): L5	1	
3300-0007-008	Door single vertically hinged painted. Location(s): L6	1	
3300-0007-015	Door single vertically hinged painted. Location(s): R1	1	
3300-0007-016	Door single vertically hinged painted. Location(s): R2	1	
3300-0007-017	Door single vertically hinged painted. Location(s): R3	1	
3300-0008-018	Door double vertically hinged painted. Location(s): R4	1	
3300-0011-005	Door single horizontally hinged lift-up painted. Location(s): L3	1	
3300-0011-006	Door single horizontally hinged lift-up painted. Location(s): L4	1	
COVERS			
3305-0007-000-02	Vinyl Red hosebed cover with attached rear flap(s).	1	
3305-0008-000-02	Vinyl Red crosslay cover with attached side flaps.	1	
PUMP PANELS			
3134-0012	Officer side upper pump access panel to be horizontally hinged with diamond plate door. Includes (2) push button latches and (2) hold open devices.	1	
3134-0016	Stainless steel driver and officer side pump panels.	1	
3134-0064	The gauge panel(s) on the driver side of the Side Mount module to be hinged upward. Panel(s) to include (2) mechanical/pneumatic (as applicable to panel size) hold opens and latches.	1	
MISC PUMP PANEL OPTIONS			
4460-0003	Pump Panel Tags Color Coded per NFPA Compliance	1	
WATER TANK			
4010-0033	500 gallon "T" water tank.	1	
TANK PLUMBING			
4450-0010	2" Tank Fill Akron Manual Valve	1	
4450-0022	3" Tank to Pump Akron Manual Valve	1	
LADDER STORAGE / RACKS			
3365-0037-614	Center mounted ladder tunnel. Ladder rack to hold: PEL3-35, PEL-24, PRL-16, PRL-14, AEL-12 and FL-10. Requires roof ladder option on base section of aerial to	1	

Salescode	Extended Description	Qty	
LADDER STORAGE / RACKS			
	meet 115' NFPA requirement.		
HANDRAILS / STEPS			
3330-0002-050	Slideout platform-rollerless. Includes chrome grab handle centered on the frt face of the platform. Located below driver side pump panel.	1	
3330-0007-060	Folding Step. Location officer side front compartment face. Each location requires a minimum of (1) handrail per NFPA.	3	
3330-0007-062	Folding Step. Location driver side front compartment face. Each location requires a minimum of (1) handrail per NFPA.	3	
MISC BODY OPTIONS			
3090-0002	The unit has no overall height restrictions.	1	
3090-0004	The unit has no overall length restrictions.	1	
3090-0006	The hosebed is to have the capacity for the following hose (List from Driver to Officer).	1	Lay 1 - 1000 ft. of 5.00 LDH
3340-0093	Mud flaps, rear, black with E-ONE logo.	1	
3340-0107	Diamond plate tandem axle wheel well. Includes bolt-on composite wheel well liners and fenderettes.	1	
3340-0270	The painted aerial body side panels shall be smooth / flush. Applies to SideStacker HB side, panels next to water tank on MM, and upper body sides on RLP.	1	
PUMPS			
4005-0016	Hale QMAX 1500-2250 GPM single stage Pump	1	
4005-0031	Rating 1500 GPM	1	
PUMP CERTIFICATION			
4475-0000	Pump certification 750-2250 GPM	1	
PUMP OPTIONS			
4015-0007	Pump Cooler	1	
4015-0008	Zinc Anodes for Hale Pump - (Pair) (1) Discharge side and (1) Intake Side	1	
4015-0022	Pump Seal Mechanical - Hale	1	
4015-0052-198	Steamers to be Flush Location: driver's side.	1	
4015-0052-199	Steamers to be Flush Location: officer's side.	1	
4015-0073	Manual operated master pump drain. The master drain shall be clearly marked and placed in accessible location rearward below running board on driver side or L1 compartment..	1	

Salescode	Extended Description	Qty	
INTAKES			
4440-0005	2.5" Left Intake Akron Manual Valve	1	
INTAKE OPTIONS			
4445-0009	Valve Relief Intake - Akron	1	
DISCHARGES AND PRECONNECTS			
4415-0012-654	1.5" Crosslay with Akron Manual Valve. Location: crosslay 1 & 2	2	
4415-0034-583	3" Right Pump Panel Discharge Akron Manual Valve Location: right side discharge 1	1	
4415-0051	4" Waterway Discharge with 3" Akron Manual Valve	1	
4415-0161-581	2.5" Left Panel Discharge Akron Manual Valve w/30 Degree Droop Location: left side discharge 1	1	
4415-0161-582	2.5" Left Panel Discharge Akron Manual Valve w/30 Degree Droop Location: left side discharge 2	1	
4415-0164-584	2.5" Right Panel Discharge Akron Manual Valve w/30 Degree Droop Location: right side discharge 2	1	
DISCHARGE OPTIONS			
4417-0058-359	Bleeder Drain Valve Plumbed to: waterway discharge	1	
4417-0058-573	Bleeder Drain Valve Plumbed to: crosslay preconnect	2	
4417-0058-575	Bleeder Drain Valve Plumbed to: left discharge	2	
4417-0058-576	Bleeder Drain Valve Plumbed to: right discharge	2	
PRESSURE GOVERNORS			
4465-0005	Class1 Captain pressure governor.	1	
GAUGES			
4435-0001	Class 1 Intelli-Tank Water Tank Level Gauge	1	
4435-0013	Class 1 Pressure 4.5" Gauge (30-0-600 PSI)	2	
4435-0015-352	2.5" Class 1 Pressure Gauge (30-0-600). Discharge: 1.5 in. crosslay preconnect	2	
4435-0015-359	2.5" Class 1 Pressure Gauge (30-0-600). Discharge: waterway discharge	1	
4435-0015-581	2.5" Class 1 Pressure Gauge (30-0-600). Discharge: left side discharge 1	1	
4435-0015-582	2.5" Class 1 Pressure Gauge (30-0-600). Discharge: left side discharge 2	1	
4435-0015-583	2.5" Class 1 Pressure Gauge (30-0-600). Discharge: right side discharge 1	1	
4435-0015-584	2.5" Class 1 Pressure Gauge (30-0-600). Discharge: right side discharge 2	1	
4435-0069	Enfo IV System on Pump Operator's Panel	1	

Salescode	Extended Description	Qty	
ELECTRICAL SYSTEMS			
5010-0003	Multiplex modem kit. Includes cable, modem, and adapter harness.	1	
5010-0004	Multiplex Data Logger	1	
5010-0005	Multiplex electrical system for aerials.	1	
5010-0013-E91	Vehicle data recorder - 2009 NFPA compliant. Includes occupant detection with display. Display location: Driver side of center dash electrical cover.	1	
LIGHT BARS			
5300-0015-034	Light bar Federal Signal ADX2201 LED (PR) with red lenses. Location: front cab corners	1	
WARNING LIGHT PACKAGES			
5550-0057-535	Federal Signal QuadraFlare LED lower level warning light package. Includes (8) QL64XF-R LED light heads with bezels and (2) Model 3300-04 LED light heads. Locate side facing lights: at forward most position, centered in rear wheelwell, and side facing at rear of body in rubrail if equipped.	1	
5550-0067	Flash rate for Federal QuadraFlare LED lower level warning lights to be set at pattern 4, alternating quad flash (75 QFPM).	1	
WARNING LIGHTS			
5600-0034-290-09	Federal Model SY12FS Sentry (PR) with driver amber, officer red domes. Location: above L2/R2 compartments offset rearward to supplement upper rear warnings.	1	
5600-0034-479-09	Federal Model SY12FS Sentry (PR) with driver amber, officer red domes. Location: rear upper body on aerial style brackets.	1	
5600-0149-170	Hazard (door ajar) light 2.5" incandescent. Location: center overhead	1	
SIRENS			
5500-0009	Federal PA300 siren recessed mounted.	1	
5500-0024-170	The electronic siren control is to be located on the center overhead.	1	
SPEAKERS			
5510-0029-209	Speaker Federal Dynamax ES100-EF thru bumper. Location: driver side front bumper.	1	
DOT LIGHTING			
5150-0017	License plate light LED with chrome housing located at the rear of the body.	1	
5150-0026	Marker light LED body/cab package. E-ONE custom cab with aerial ladder, Mid-Mount platform or Bronto bodies only.	1	
5150-0061	Federal Signal QuadraFlare LED horizontal mount taillights. Includes LED stop/tail, turn and backup lights with horizontal Cast 3 housing and weatherproof connectors.	1	

Salescode	Extended Description	Qty	
DOT LIGHTING			
5150-0080-462	Weldon auxiliary turn signal model 9186-8580 LED (PR). Location: (1) each side in center of rear tandem wheelwell	1	
LIGHTS - COMPARTMENT, STEP & GROUND			
5380-0010	Compartment light package incandescent for large bodies.	1	
5380-0029	Ground light package for cab and body - large.	1	
5380-0035	Step light package body - large.	1	
LIGHTS - DECK AND SCENE			
5390-0003	Hosebed light Trucklite. Locate center front of hosebed. Switched with work light switch in cab.	1	
5390-0008-446	Federal Signal GH Scene lights (PR). Switch in cab (driver and officer side facing lights switched separately). Locate (1) each side at rear below pike pole compts	1	
5390-0022	Crosslay light Trucklite. Locate to rear of crosslay (SM) and forward of crosslay (TM as applicable). Switched with work light switch in cab.	1	
LIGHTS - NON-WARNING			
5400-0003	Engine Compartment Light (EA).	1	
5400-0008	(1) pump panel light over the pump control area to be wired to come on when pump shift is placed to pump.	1	
5400-0010	Incandescent pump compartment light (EA).	1	
5400-0039	Spotlight Specialty 2150 hand held located on officer's side of cab dash - hardwired.	1	
5400-0047	Pump panel light package with (3) lights per side pump panel. Pump panels over 45" may require additional lights. Side mount only.	1	
CONTROLS / SWITCHES			
5100-0000-199	Foot Switch to control air horns located officer's side	1	
5100-0007-198	Foot Switch to control electronic siren located driver's side	1	
MISC ELECTRICAL			
1750-0082-762	12V power distribution module. Includes (6) battery hot and (6) switched hot circuits. 100 amps max (IATS). Location: behind officer's seat	1	
5110-0017	Back up alarm 97 dB(A).	1	
AERIAL MODEL			
6100-0009	Ladder HP100 SideStacker. Includes pinned waterway, left side console with cover, turntable mansaver bars, split steps at tip and jack leg flood lights.	1	

Salescode	Extended Description	Qty	
AERIAL HYDRAULIC SYSTEM OPTIONS			
6150-0003-216	Gauge aerial hydraulic oil level. Electronic display to be located on pump operators panel.	1	
MONITORS			
6300-0002	Monitor Akron electric 1000GPM for ladder. Includes tip and base controls.	1	
6300-0017	Monitor painted silver from OEM.	1	
AERIAL WARNING LIGHTS			
6550-0002	Outrigger warning lights (4) LED. Trucklite Model 91R.	1	
AERIAL LIGHTING			
6560-0002-231	Spot light 12V located left side tip.	1	
6560-0002-232	Spot light 12V located right side tip.	1	
6560-0005	Flood lights Unity at base (PR).	1	
WATERWAY OPTIONS			
6350-0005	Rear 4" NST waterway inlet for rear mounted aerials. Includes chrome cap.	1	
6350-0006	2.5" Waterway pressure gauge. Locate next to waterway inlet.	1	
6350-0010	Flowminder with single readout and totalizer for the aerial waterway to be located at the aerial control station.	1	
MISC AERIAL ELECTRICAL			
6570-0008	Intercom aerial 2-way. Atkinson Dynamics (Federal). Speaker to be located to rear of platform on Bronto units.	1	
SIGN PLATES			
6750-0000-000-39	Aerial sign plates 10 x 144 (PR). Available on Booms, HP75 and HP100 only. Does not include lettering. Color: Job Color	1	
AERIAL TESTING			
6900-0000	Aerial flow test - 3rd party.	1	
6900-0002	Aerial 2009 NFPA Certification.	1	
HAND TOOLS			
7600-0005	Pike Pole Fiberglass 6'	2	
7600-0006	Pike Pole Fiberglass 8'	2	
7600-0008	Pike Pole Fiberglass 12'	2	
GROUND LADDERS			

Salescode	Extended Description	Qty	
GROUND LADDERS			
7800-0007	Alco-Lite PRL-14 Roof Ladder	1	
7800-0010	Alco-Lite PRL-16 Roof Ladder	1	
7800-0013	Alco-Lite AEL-12 Attic Extension Ladder	1	
7800-0016	Alco-Lite PEL-24 Extension Ladder	1	
7800-0023	Alco-Lite PEL3-35 3 Section Extension Ladder	1	
7800-0032	Alco-Lite 10' Folding Ladder w/Shoes - FL10 Alco-Lite 10FT folding aluminum ladder with safety shoes.	1	
MISC LOOSE EQUIPMENT			
7600-0016	Wheel Chocks 44" NFPA Complaint - Pair of Zico SAC-44. Up to 44" diameter Tires. Includes mounting bracket.	4	
7900-0014	DOT Required Drive Away Kit - Kit includes three (3) triangular warning reflectors with carrying case. This kit is for the end user and is to remain with the truck.	1	
EXTERIOR PAINT			
8100-0084	All applicable pump/pre-connect application modules are to have a job color finish. Includes upper and lower pump modules, crosswalk module and/or speedlay/pre-connect module (as applicable). Rear mounted body/pump module to be painted job color.	1	
8100-0116	Rear body surface to have a sanded finish (not painted job color). Includes hinged doors that do not have discrete sales codes and removable panels.	1	
8100-0176-000-17	Paint E-One chassis cab - Sikkens paint. Color: FLNA3225 Red.	1	
8100-0183-000-17	Paint Body - Large - For Aerials, T/A Tankers, Rear Mounts and Rescues. Sikkens paint. Color: FLNA3225 Red.	1	
INTERIOR PAINT			
8150-0010	The interior of the cab to be paint OTO gray	1	
STRIPING			
8200-0016	White Reflective Tape on 4 Outriggers	1	
8300-0003-334-12	NFPA Scotchlite Stripe - 6" wide and straight on front/sides of cab and sides/rear of body. Color: White. Location: bottom of stripe flush with top of bumper and straight back.	1	
8300-0042	White rubrail scotchlite insert.	1	
8300-0084-000-72	Chevron "A" style 6" printed sheet Scotchlite striping on rear of body. Includes rear facing extrusions, panels and doors inboard/outboard of the beavertails(if applicable). Colors to be Yellow/Red.	1	

Salescode	Extended Description	Qty	
WARRANTY / STANDARD & EXTENDED			
9100-0000	Standard 1 Year Warranty	1	
9100-0003	Lifetime Frame Warranty	1	
9100-0004	10 Year/100,000 Mile Structural Warranty - Statement of Warranty	1	
9100-0005	10 Year Stainless Steel Plumbing Warranty - Statement of Warranty	1	
9100-0007	20 Year Aerial Device Structural Warranty - Integrity Limited Warranty	1	
9100-0019	10 Year Limited Paint and Perforation Warranty - For Sikkens Paint	1	
SUPPORT, DELIVERY, INSPECTIONS AND MANUALS			
9300-0000	Vehicle familiarization aerial (Domestic).	1	
9300-0009	Manuals, Operator and Service CD-ROM.	1	
9300-0016	Approval Drawings-Standard	1	
PRICE			$733,006.

STATE OF OHIO TERM SCHEDULE

4200 SURFACE RD
COLUMBUS, OH 43228

Quote No: 35836

1/7/2010

Quote Rev:27 Drawing Rev:2

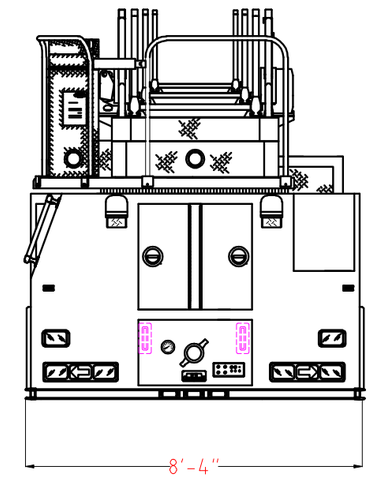

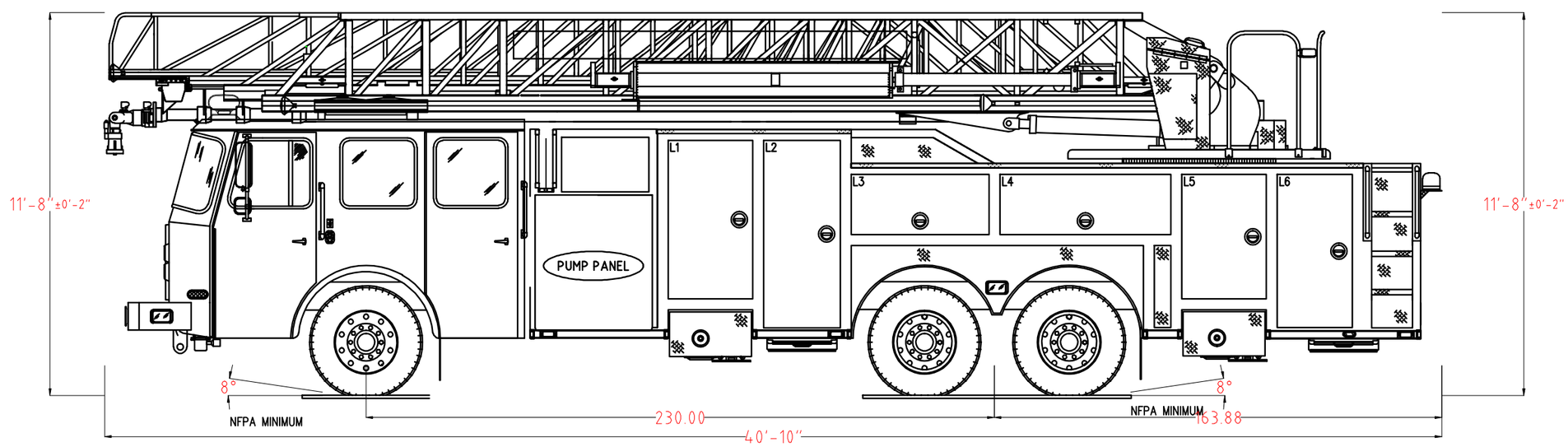

POWERED BY EZDRAW

Notice: This drawing provides a GENERAL REPRESENTATION of the vehicle configuration and should be used for evaluation purposes. The respective dimensions shown,including overall height and length, are estimates and may vary due to manufacturing processes. All other items such as lighting and fixtures, plumbing, compartmentation, and other generally assembled details are shown for REFERENCE ONLY and may not be a direct reflection of the final truck configuration. In ALL situations where this drawing may conflict with the specifications, THE SPECIFICATIONS, AS REFLECTED IN THE APPROVED SHOP ORDER, SHALL PREVAIL. Unless otherwise specified, the proposed apparatus will be manufactured to the latest NFPA recommendations as well as other applicable federally regulated safety regulations. E-One reserves the right to engineer and incorporate design improvements and changes without notice, while adhering to the intent of the specification.

1500 GPM HALE QMAXPUMP
500 TOTAL VOLUME
0 TOTAL FOAM

HOSE LOADS :

	OPENING		INTERIOR DIMENSIONS				
COMPT.	WIDTH	HEIGHT	LOWER WIDTH	LOWER HEIGHT	LOWER DEPTH	UPPER HEIGHT	UPPER DEPTH
L1	31	58	31	58	14	58	19
L2	28	68.56	28	68.56	25	68.56	19
L3	50.5	22	50.5	22	N/A	22	25
L4	62.5	22	62.5	22	N/A	22	20
L5	31	45.5	31	45.5	14	45.5	18
L6	27.5	56	27.5	56	22	56	18
R1	31	58	31	58	14	58	19
R2	28	68.5	28	68.5	25	68.5	19
R3	31	19.5	31	19.5	14	19.5	0
R4	50.5	30	50.5	30	22	30	0

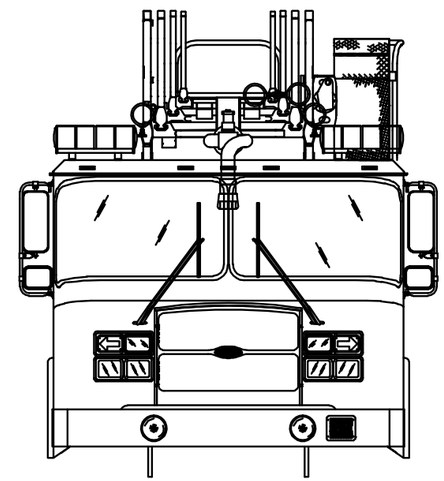

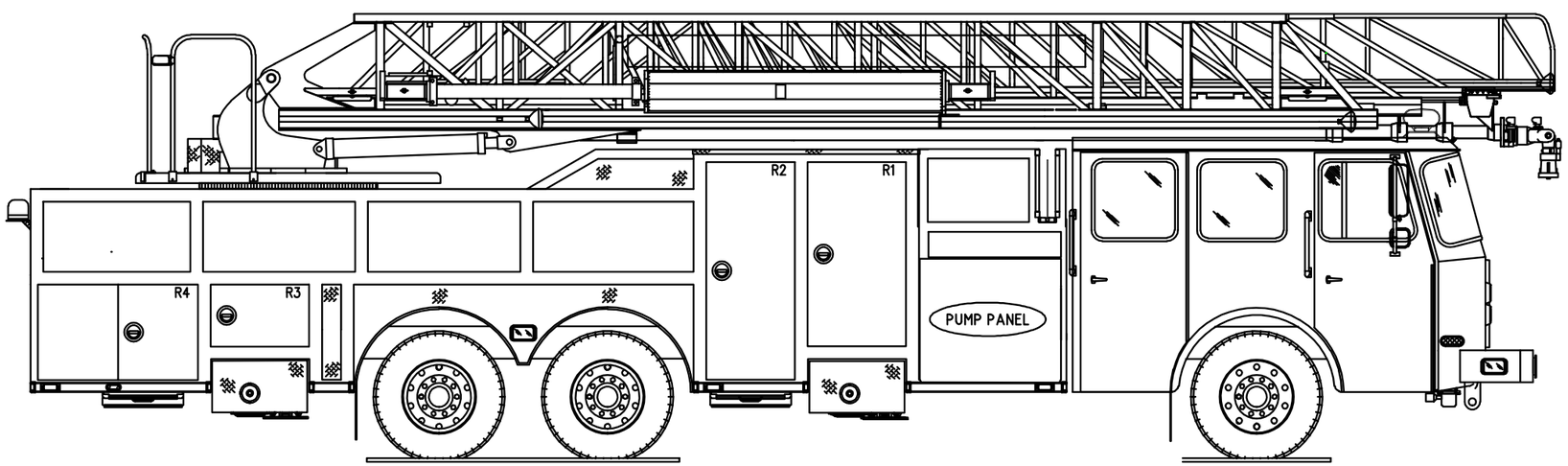

POWERED BY EZDRAW

Fire Apparatus Quotation for:
STATE OF OHIO TERM SCHEDULE

Quotation Number: 35838 Rev: 25

Unit Description: AERM-CYC2-100P

Quote Description: HP100P Aerial Platform Quint RM – Cyclone II Chassis Salesperson:

Salescode	Extended Description	Qty	
TESTING COMPLIANCE STANDARD			
1001-0015	The E-ONE supplied components of the vehicle shall meet the requirements of NFPA 1901, 2009 edition.	1	
BUMPERS			
1160-0000	Bumper 10" stainless steel	1	
1160-0010	1/8" Front Bumper Gravel Shield.	1	
1160-0013	16" Front Bumper Gravel Shield Extension.	1	
FRAME ASSEMBLY			
1250-0014	Frame - Torque box for HP100 platform.	1	
AXLE OPTIONS			
1025-0013	Meritor FL943 front axle 21,500lb	1	
1025-0023	Meritor RT-50-160 rear tandem axle 54,000lb capacity	1	
1025-0028	Koni shock absorbers for front axle - adjustable.	1	
SUSPENSIONS			
1070-0015	Ridewell Dynalastic rear suspension (52-54K) rated equal to the capacity of the axles.	1	
WHEEL OPTIONS			
1050-0001	Aluminum wheels for front axle (2).	1	
1050-0005	Aluminum wheels for rear axles (8).	1	
TIRE OPTIONS			
1060-0022	Eight Michelin 12R rear tires with Mud and Snow tread	1	
1060-0046	Two Michelin 425 tires model XFE for front axle.	1	

Salescode	Extended Description	Qty	
TIRE OPTIONS			
1060-0050	Tire pressure monitoring valve stem caps.	1	
BRAKE SYSTEMS			
1100-0000	16-1/2" x 6" S-cam brakes with ArvinMeritor automatic slack adjusters for front axle	1	
1100-0006	Parking brake release mounted on the driver's side lower dash	1	
1100-0008	Brake system air 6X4.	1	
1100-0014	ArvinMeritor 16-1/2" x 7" S-cam brakes with cast brake drums for a tandem rear axle	1	
1100-0026	G4 Electronic Stability Control (6x4), Includes RSC and ATC. Not available on 6x6 or commercial chassis.	1	
AIR SYSTEM OPTIONS			
1110-0000-001	Inlet for air system. Location: driver door jamb	1	
1110-0002	Air dryer Bendix AD-9	1	
1110-0006	Air lines nylon	1	
1110-0026	Air horns recessed in bumper (PR)	1	
1110-0027	Isolated air tank. Includes pressure protection valve.	1	
1110-0043	Auxiliary air tank to be plumbed to the following optional accessories (if equipped):Chassis air horns, brake system air outlet, air reel and light tower.	1	
ENGINES & TRANSMISSIONS			
1200-0017	Push button transmission selector	1	
1200-0021	Trans Synd synthetic transmission fluid for EVS 4000.	1	
1200-0059	Eng/Trans Cummins ISM 450HP/EVS4000 2007 EPA Compliant Engine	1	
1200-0096	Electronically limited speed to 60 MPH.	1	
SECONDARY BRAKING			
1125-0002	Brake Jacob's engine compression	1	
COOLING PACKAGE			
1800-0005	Cooling system for use with Cyclone II X, Typhoon X, and Quest chassis. Includes coolant recovery system.	1	
FUEL SYSTEMS			
1350-0005	Fuel system 65 gallons	1	
1350-0011	Fuel pump electric w/reprime	1	

Salescode	Extended Description	Qty	
FUEL SYSTEMS			
1350-0013	Fuel water Racor separator to be a bottom drop out style. Shall include indicator light and audible alarm.	1	
1350-0022	Fuel line hose rubber.	1	
ALTERNATOR			
1700-0005	Alternator Leece Neville 320amp. 320 Amp SAE/275 NFPA Neville	1	
BATTERIES			
1400-0002	Battery four group 31 1000CCA	1	
CHASSIS OPTIONS			
1680-0005	Thermatic Fan Clutch	1	
1680-0007	Drivelines 1810. Required on 1550 lb/ft torque engines	1	
1680-0008	Tow eyes front painted below bumper / cab (PR).	1	
1680-0012	Tow eyes rear frame painted	1	
1680-0017	Hotshift PTO	1	
CAB MODEL			
1520-0008	Cyclone II X medium cab with 58" CA	1	
CAB ROOF TYPE			
1615-0004	Cab roof to be "flat" with trough for waterway. Required with HM100 (with waterway), HP100 (all), CR100/92 Pltfm (SdStckr and W/O/P) or HP100 Pltfrm (all).	1	
CAB BADGE PACKAGE			
1610-0000	Cab and body to have applicable E-ONE logos.	1	
CAB DOOR OPTIONS			
1550-0003	Rear crew cab doors in the medium position.	1	
1550-0006	Driver and Officer cab door windows. Include rear fixed window.	1	
1550-0011	Rear crew cab door windows. Includes manual roll-down actuation. Not available with paddle style door latching.	1	
1550-0016	Door panels cab ABS	1	
1550-0025	All cab doors shall have "L" style exterior latches.	1	
1550-0027	Front cab door windows to manually roll up.	1	
1550-0037-659	(4) Incandescent cab step area lighting. Locate each light in on each cab door in the inboard position. Lights to be switched with door ajar.	1	

Salescode	Extended Description	Qty	
CAB DOOR OPTIONS			
1550-0044	All cab door kick plates to be made from diamond plate aluminum.	1	
1550-0059-000-72	Reflective Yellow/Red striping positioned in the "A" formation located in the lower cab door panels	1	
MIRRORS			
1670-0003	Velvac #2010 mirrors. Door mounted with remote control and heat.	1	
MISC EXTERIOR CAB OPTIONS			
1550-0020	Windows cab side fixed driver's side	1	
1550-0033	Windows cab side fixed officer's side	1	
1675-0022	Pair of 18" handrails located just behind driver and officer front door one each side	1	
1675-0023	Pair of 18" handrails located just behind driver and officer rear door (ALS doors if equipped) one each side.	1	
1675-0030	Mud flaps, front, black with E-ONE logo.	1	
1675-0047	Rear cab wall to be 3/16" aluminum diamond plate.	1	
HVAC			
1515-0018	Air conditioning for the CII X and Quest with Cummins ISM or Detroit Diesel Series 60 engine, roof top mounted condensor.	1	
SEATS			
1510-0003	Seats 911 Brand.	1	
1510-0007	Seat cover material vinyl.	1	
1510-0008	Seat color gray	1	
1510-0035-147	Universal air pack bottle bracket (EA). Location: officer's seat	1	
1510-0035-148	Universal air pack bottle bracket (EA). Location: rear facing driver's side	1	
1510-0035-151	Universal air pack bottle bracket (EA). Location: inboard driver's side rear wall	1	
1510-0035-152	Universal air pack bottle bracket (EA). Location: inboard officer's side rear wall	1	
1510-0035-215	Universal air pack bottle bracket (EA). Location: rear facing officer's side	1	
1510-0038	Driver seat 911 air ride.	1	
1510-0042	Officer seat to be 911 fixed SCBA	1	
1510-0050	Rear facing 911 seat with SCBA driver's side	1	
1510-0053	Rear facing 911 seat with SCBA officer's side	1	
1510-0062	Two man bench centered on rear wall with 911 SCBA backs.	1	
1685-0033	Seating capacity tag of six occupants.	1	

Salescode	Extended Description	Qty	
MISC INTERIOR CAB OPTIONS			
1685-0000	Cab interior gray. Does not include engine cover or seat color.	1	
1685-0005	Lexan sun visors, driver and officer's side overhead	1	
1685-0057	Heater Rear with Cover (PR) and front heater with heat to the feet for the driver and officer	1	
1685-0116	Interior grab handle rubber covered (2). Locate one each side at interior of front cab door opening (at rear of opening).	1	
CAB ELECTRICAL OPTIONS			
1750-0019	Battery charger Super Smart 110 volt, 20 amp.	1	
1750-0029	Switch horn button two position DOT/air horn	1	
1750-0046-195	Cab Headlights. Position: lower	1	
1750-0059-179-04	Receptacle inlet 20amp with a Yellow cover. Location: outside driver's door next to handrail	1	
1750-0072-593	12 volt electrical outlet in the cab wired battery hot. Location: officer side dash.	2	
1750-0075	English dominant main cab gauge cluster.	1	
1750-0083-172	Turn signal Federal Signal QuadraFlare QL64Z-ARROW LED amber pair located upper headlight bezel	1	
1750-0198-A31	Battery charger to be located behind driver's seat.	1	
5400-0037	Dome Lts Red/White Incandescent. Package includes two lights mounted in the front and two mounted in the rear of the cab. White light wire through door and light assembly mounted switch. Red light through light assembly mounted switch.	1	
BODY SPEC			
3090-0000	Body Specs - SideStacker aerial with tandem axle. Includes left rear staircase with pocket style drop down step.	1	
BODY COMPT REAR			
3110-0058	Rear of body to have flush un-painted smooth plate body panels to facilitate rear body striping.	1	
AERIAL BODY OPTIONS			
3310-0029	Auxiliary jack pad 26X26 (4) with side mounted handle. Includes (2) double mounting brackets.	1	
3310-0032	Recessed tubes for (6) pike poles. Not available on HP75 SideStacker.	1	
3310-0052	Crosslay double 5.5" wide single stack to hold up to 200' of 2.0" DJ (each) or 150'-200' 2.5" DJ (each). Includes storage pan to rear of crosslays.	1	
3310-0069	Rear ladder tunnel doors. Vertically hinged smooth plate to match rear body finish.	1	

Salescode	Extended Description	Qty	
AERIAL BODY OPTIONS			
3310-0072	Compartments driver side HP100 Platform SideStacker with 300g tank. Includes rescue style extended height compartments. The door on small compts next to rear outrigger to match wheelwell.	1	
3310-0073	Compartments officer side HP100 Platform SideStacker with 300g tank. Includes rescue style extended height compartments ahead of wheel well with extended hosebed.	1	
3310-0075	Upper dunnage area extension 34 x 58 diamond plate.	1	
3310-0081	Jack leg opening cover diamond plate (4). Includes diamond plate outrigger cover and diamond plate filler panel.	1	
DOORS			
3300-0007-003	Door single vertically hinged painted. Location(s): L1	1	
3300-0007-015	Door single vertically hinged painted. Location(s): R1	1	
3300-0007-017	Door single vertically hinged painted. Location(s): R3	1	
3300-0007-018	Door single vertically hinged painted. Location(s): R4	1	
3300-0007-019	Door single vertically hinged painted. Location(s): R5	1	
3300-0011-005	Door single horizontally hinged lift-up painted. Location(s): L3	1	
3300-0011-006	Door single horizontally hinged lift-up painted. Location(s): L4	1	
3300-0030-004	Door double 3-point vertically hinged painted. Location(s): L2	1	
3300-0030-007	Door double 3-point vertically hinged painted. Location(s): L5	1	
3300-0030-016	Door double 3-point vertically hinged painted. Location(s): R2	1	
COVERS			
3305-0007-000-02	Vinyl Red hosebed cover with attached rear flap(s).	1	
3305-0008-000-02	Vinyl Red crosslay cover with attached side flaps.	1	
PUMP PANELS			
3134-0012	Officer side upper pump access panel to be horizontally hinged with diamond plate door. Includes (2) push button latches and (2) hold open devices.	1	
3134-0016	Stainless steel driver and officer side pump panels.	1	
3134-0064	The gauge panel(s) on the driver side of the Side Mount module to be hinged upward. Panel(s) to include (2) mechanical/pneumatic (as applicable to panel size) hold opens and latches.	1	
MISC PUMP PANEL OPTIONS			
4460-0003	Pump Panel Tags Color Coded per NFPA Compliance	1	

Salescode	Extended Description	Qty	
WATER TANK			
4010-0030	300 gallon "T" water tank.	1	
TANK PLUMBING			
4450-0010	2" Tank Fill Akron Manual Valve	1	
4450-0022	3" Tank to Pump Akron Manual Valve	1	
LADDER STORAGE / RACKS			
3365-0076-607	Center mounted ladder tunnel. Ladder rack to hold: (2)PEL-35, PEL-28, PEL-24, PRL-20, PRL-16 and FL-10.	1	
HANDRAILS / STEPS			
3330-0002-050	Slideout platform-rollerless. Includes chrome grab handle centered on the frt face of the platform. Located below driver side pump panel.	1	
3330-0007-060	Folding Step. Location officer side front compartment face. Each location requires a minimum of (1) handrail per NFPA.	3	
3330-0007-062	Folding Step. Location driver side front compartment face. Each location requires a minimum of (1) handrail per NFPA.	3	
MISC BODY OPTIONS			
3090-0001	Hosebed capacity aerial. Provide standard size hosebed.	1	
3090-0002	The unit has no overall height restrictions.	1	
3090-0004	The unit has no overall length restrictions.	1	
3340-0058	Recessed fuel fill driver side wheel well.	1	
3340-0093	Mud flaps, rear, black with E-ONE logo.	1	
3340-0107	Diamond plate tandem axle wheel well. Includes bolt-on composite wheel well liners and fenderettes.	1	
3340-0270	The painted aerial body side panels shall be smooth / flush. Applies to SideStacker HB side, panels next to water tank on MM, and upper body sides on RLP.	1	
PUMPS			
4005-0016	Hale QMAX 1500-2250 GPM single stage Pump	1	
4005-0031	Rating 1500 GPM	1	
PUMP CERTIFICATION			
4475-0000	Pump certification 750-2250 GPM	1	
PUMP OPTIONS			
4015-0007	Pump Cooler	1	

Salescode	Extended Description	Qty	
PUMP OPTIONS			
4015-0008	Zinc Anodes for Hale Pump - (Pair) (1) Discharge side and (1) Intake Side	1	
4015-0022	Pump Seal Mechanical - Hale	1	
4015-0052-198	Steamers to be Flush Location: driver's side.	1	
4015-0052-199	Steamers to be Flush Location: officer's side.	1	
4015-0073	Manual operated master pump drain. The master drain shall be clearly marked and placed in accessible location rearward below running board on driver side or L1 compartment..	1	
INTAKES			
4440-0005	2.5" Left Intake Akron Manual Valve	1	
INTAKE OPTIONS			
4445-0009	Valve Relief Intake - Akron	1	
DISCHARGES AND PRECONNECTS			
4415-0012-654	1.5" Crosslay with Akron Manual Valve. Location: crosslay 1 & 2	2	
4415-0034-583	3" Right Pump Panel Discharge Akron Manual Valve Location: right side discharge 1	1	
4415-0052	4" Waterway Discharge with 4" Akron Electric Valve	1	
4415-0161-581	2.5" Left Panel Discharge Akron Manual Valve w/30 Degree Droop Location: left side discharge 1	1	
4415-0161-582	2.5" Left Panel Discharge Akron Manual Valve w/30 Degree Droop Location: left side discharge 2	1	
4415-0164-584	2.5" Right Panel Discharge Akron Manual Valve w/30 Degree Droop Location: right side discharge 2	1	
DISCHARGE OPTIONS			
4417-0058-359	Bleeder Drain Valve Plumbed to: waterway discharge	1	
4417-0058-573	Bleeder Drain Valve Plumbed to: crosslay preconnect	2	
4417-0058-575	Bleeder Drain Valve Plumbed to: left discharge	2	
4417-0058-576	Bleeder Drain Valve Plumbed to: right discharge	2	
PRESSURE GOVERNORS			
4465-0005	Class1 Captain pressure governor.	1	
GAUGES			
4435-0001	Class 1 Intelli-Tank Water Tank Level Gauge	1	

Salescode	Extended Description	Qty	
GAUGES			
4435-0013	Class 1 Pressure 4.5" Gauge (30-0-600 PSI)	2	
4435-0015-352	2.5" Class 1 Pressure Gauge (30-0-600). Discharge: 1.5 in. crosslay preconnect	2	
4435-0015-359	2.5" Class 1 Pressure Gauge (30-0-600). Discharge: waterway discharge	1	
4435-0015-581	2.5" Class 1 Pressure Gauge (30-0-600). Discharge: left side discharge 1	1	
4435-0015-582	2.5" Class 1 Pressure Gauge (30-0-600). Discharge: left side discharge 2	1	
4435-0015-583	2.5" Class 1 Pressure Gauge (30-0-600). Discharge: right side discharge 1	1	
4435-0015-584	2.5" Class 1 Pressure Gauge (30-0-600). Discharge: right side discharge 2	1	
4435-0069	Enfo IV System on Pump Operator's Panel	1	
ELECTRICAL SYSTEMS			
5010-0003	Multiplex modem kit. Includes cable, modem, and adapter harness.	1	
5010-0004	Multiplex Data Logger	1	
5010-0005	Multiplex electrical system for aerials.	1	
5010-0013-E91	Vehicle data recorder - 2009 NFPA compliant. Includes occupant detection with display. Display location: Driver side of center dash electrical cover.	1	
LIGHT BARS			
5300-0015-034	Light bar Federal Signal ADX2201 LED (PR) with red lenses. Location: front cab corners	1	
WARNING LIGHT PACKAGES			
5550-0057-538	Federal Signal QuadraFlare LED lower level warning light package. Includes (8) QL64XF-R LED light heads with bezels and (2) Model 3300-04 LED light heads. Locate side facing lights: at forward most position, in rear wheelwell offset to front, and side facing at rear of body in rubrail if equipped.	1	
5550-0067	Flash rate for Federal QuadraFlare LED lower level warning lights to be set at pattern 4, alternating quad flash (75 QFPM).	1	
WARNING LIGHTS			
5600-0034-290-09	Federal Model SY12FS Sentry (PR) with driver amber, officer red domes. Location: above L2/R2 compartments offset rearward to supplement upper rear warnings.	1	
5600-0034-479-09	Federal Model SY12FS Sentry (PR) with driver amber, officer red domes. Location: rear upper body on aerial style brackets.	1	
5600-0149-170	Hazard (door ajar) light 2.5" incandescent. Location: center overhead	1	
SIRENS			
5500-0009	Federal PA300 siren recessed mounted.	1	

Salescode	Extended Description	Qty	
SIRENS			
5500-0024-170	The electronic siren control is to be located on the center overhead.	1	
SPEAKERS			
5510-0029-209	Speaker Federal Dynamax ES100-EF thru bumper. Location: driver side front bumper.	1	
DOT LIGHTING			
5150-0017	License plate light LED with chrome housing located at the rear of the body.	1	
5150-0028	Marker light LED body/cab package. E-ONE custom cab with rear mount aerial platform bodies only. Includes (3) marker lights on front of platform.	1	
5150-0060	Federal Signal QuadraFlare LED vertical mount taillights. Includes LED stop/tail, turn and backup lights with vertical Cast 3 housing and weatherproof connectors.	1	
5150-0080-462	Weldon auxiliary turn signal model 9186-8580 LED (PR). Location: (1) each side in center of rear tandem wheelwell	1	
LIGHTS - COMPARTMENT, STEP & GROUND			
5380-0010	Compartment light package incandescent for large bodies.	1	
5380-0029	Ground light package for cab and body - large.	1	
5380-0035	Step light package body - large.	1	
LIGHTS - DECK AND SCENE			
5390-0003	Hosebed light Trucklite. Locate center front of hosebed. Switched with work light switch in cab.	1	
5390-0008-446	Federal Signal GH Scene lights (PR). Switch in cab (driver and officer side facing lights switched separately). Locate (1) each side at rear below pike pole compts	1	
5390-0022	Crosslay light Trucklite. Locate to rear of crosslay (SM) and forward of crosslay (TM as applicable). Switched with work light switch in cab.	1	
LIGHTS - NON-WARNING			
5400-0003	Engine Compartment Light (EA).	1	
5400-0008	(1) pump panel light over the pump control area to be wired to come on when pump shift is placed to pump.	1	
5400-0010	Incandescent pump compartment light (EA).	1	
5400-0039	Spotlight Specialty 2150 hand held located on officer's side of cab dash - hardwired.	1	
5400-0047	Pump panel light package with (3) lights per side pump panel. Pump panels over 45" may require additional lights. Side mount only.	1	
CONTROLS / SWITCHES			

Salescode	Extended Description	Qty	
CONTROLS / SWITCHES			
5100-0000-199	Foot Switch to control air horns located officer's side	1	
5100-0007-198	Foot Switch to control electronic siren located driver's side	1	
MISC ELECTRICAL			
1750-0082-762	12V power distribution module. Includes (6) battery hot and (6) switched hot circuits. 100 amps max (IATS). Location: behind officer's seat	1	
5110-0017	Back up alarm 97 dB(A).	1	
AERIAL MODEL			
6100-0018	Platform HP100 with SideStacker T/T. Includes left side roll top console, turntable mansaver bars and jack leg flood lights.	1	
AERIAL HYDRAULIC SYSTEM OPTIONS			
6150-0003-216	Gauge aerial hydraulic oil level. Electronic display to be located on pump operators panel.	1	
MONITORS			
6300-0007	Monitor Akron electric 1250GPM for platform. Includes tip controls, base controls and butterfly valve.	1	
6300-0017	Monitor painted silver from OEM.	1	
AERIAL WARNING LIGHTS			
6550-0002	Outrigger warning lights (4) LED. Trucklite Model 91R.	1	
6550-0013	Federal QL64XF LED red warning lights (4). Located down low across front of platform wired to upper level warning lights.	1	
6550-0016-224-06	Federal QL64XF Red LED warning lights on platform (PR). The lights shall be switched with aerial master and located one each side on the side of ground pad brackets.	1	
AERIAL LIGHTING			
6560-0002-235	Spot light 12V located left side front of platform.	1	
6560-0002-236	Spot light 12V located right side front of platform.	1	
6560-0005	Flood lights Unity at base (PR).	1	
WATERWAY OPTIONS			
6350-0005	Rear 4" NST waterway inlet for rear mounted aerials. Includes chrome cap.	1	
6350-0006	2.5" Waterway pressure gauge. Locate next to waterway inlet.	1	
6350-0012-192	Akron 2.5" valve for platform. Valve to be located at the front of platform next to	1	

Salescode	Extended Description	Qty	
WATERWAY OPTIONS			
	monitor.		
6350-0014	2.5" chrome elbow with 2.5" x 1.5" reducer and 1.5" cap for platform discharge valve.	1	
MISC AERIAL ELECTRICAL			
6570-0008	Intercom aerial 2-way. Atkinson Dynamics (Federal). Speaker to be located to rear of platform on Bronto units.	1	
6570-0012	Aerial Information System (AIS) for platform.	1	
BREATHING AIR			
6400-0003	Breathing air platform with (1) 444CF cylinder. Includes low air alarm.	1	
SIGN PLATES			
6750-0004-000-39	Aerial sign plates 12 x 144 (PR). Available on HP78, HP100 and HP100 platform only. Does not include lettering. Color: Job Color	1	
AERIAL TESTING			
6900-0000	Aerial flow test - 3rd party.	1	
6900-0002	Aerial 2009 NFPA Certification.	1	
HAND TOOLS			
7600-0005	Pike Pole Fiberglass 6'	2	
7600-0006	Pike Pole Fiberglass 8'	2	
7600-0008	Pike Pole Fiberglass 12'	2	
GROUND LADDERS			
7800-0010	Alco-Lite PRL-16 Roof Ladder	1	
7800-0012	Alco-Lite TRL-20 Roof Ladder	1	
7800-0016	Alco-Lite PEL-24 Extension Ladder	1	
7800-0021	Alco-Lite PEL-28 Extension Ladder	1	
7800-0024	Alco-Lite PEL-35 Extension Ladder	1	
7800-0032	Alco-Lite 10' Folding Ladder w/Shoes - FL10 Alco-Lite 10FT folding aluminum ladder with safety shoes.	1	
MISC LOOSE EQUIPMENT			
7600-0016	Wheel Chocks 44" NFPA Complaint - Pair of Zico SAC-44. Up to 44" diameter Tires. Includes mounting bracket.	4	
7900-0014	DOT Required Drive Away Kit - Kit includes three (3) triangular warning reflectors	1	

Salescode	Extended Description	Qty	
MISC LOOSE EQUIPMENT			
	with carrying case. This kit is for the end user and is to remain with the truck.		
EXTERIOR PAINT			
8100-0084	All applicable pump/pre-connect application modules are to have a job color finish. Includes upper and lower pump modules, crosswalk module and/or speedlay/pre-connect module (as applicable). Rear mounted body/pump module to be painted job color.	1	
8100-0116	Rear body surface to have a sanded finish (not painted job color). Includes hinged doors that do not have discrete sales codes and removable panels.	1	
8100-0176-000-17	Paint E-One chassis cab - Sikkens paint. Color: FLNA3225 Red.	1	
8100-0183-000-17	Paint Body - Large - For Aerials, T/A Tankers, Rear Mounts and Rescues. Sikkens paint. Color: FLNA3225 Red.	1	
INTERIOR PAINT			
8150-0010	The interior of the cab to be paint OTO gray	1	
STRIPING			
8200-0016	White Reflective Tape on 4 Outriggers	1	
8300-0003-333-12	NFPA Scotchlite Stripe - 6" wide and straight on front/sides of cab and sides/rear of body. Color: White. Location: top of stripe flush with top of bumper and straight back.	1	
8300-0042	White rubrail scotchlite insert.	1	
8300-0084-000-72	Chevron "A" style 6" printed sheet Scotchlite striping on rear of body. Includes rear facing extrusions, panels and doors inboard/outboard of the beavertails(if applicable). Colors to be Yellow/Red.	1	
WARRANTY / STANDARD & EXTENDED			
9100-0000	Standard 1 Year Warranty	1	
9100-0003	Lifetime Frame Warranty	1	
9100-0004	10 Year/100,000 Mile Structural Warranty - Statement of Warranty	1	
9100-0005	10 Year Stainless Steel Plumbing Warranty - Statement of Warranty	1	
9100-0007	20 Year Aerial Device Structural Warranty - Integrity Limited Warranty	1	
9100-0019	10 Year Limited Paint and Perforation Warranty - For Sikkens Paint	1	
SUPPORT, DELIVERY, INSPECTIONS AND MANUALS			
9300-0000	Vehicle familiarization aerial (Domestic).	1	
9300-0016	Approval Drawings-Standard	1	

Salescode	Extended Description	Qty	
SUPPORT, DELIVERY, INSPECTIONS AND MANUALS			
9300-0038	Manuals, operator, service and exploded view parts CD-ROM.	1	
PRICE			$855,701.

STATE OF OHIO TERM SCHEDULE

4200 SURFACE RD
COLUMBUS, OH 43228

Quote No: 35838

1/7/2010

Quote Rev:25 Drawing Rev:2

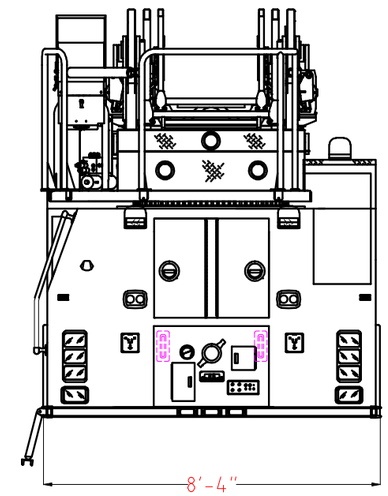

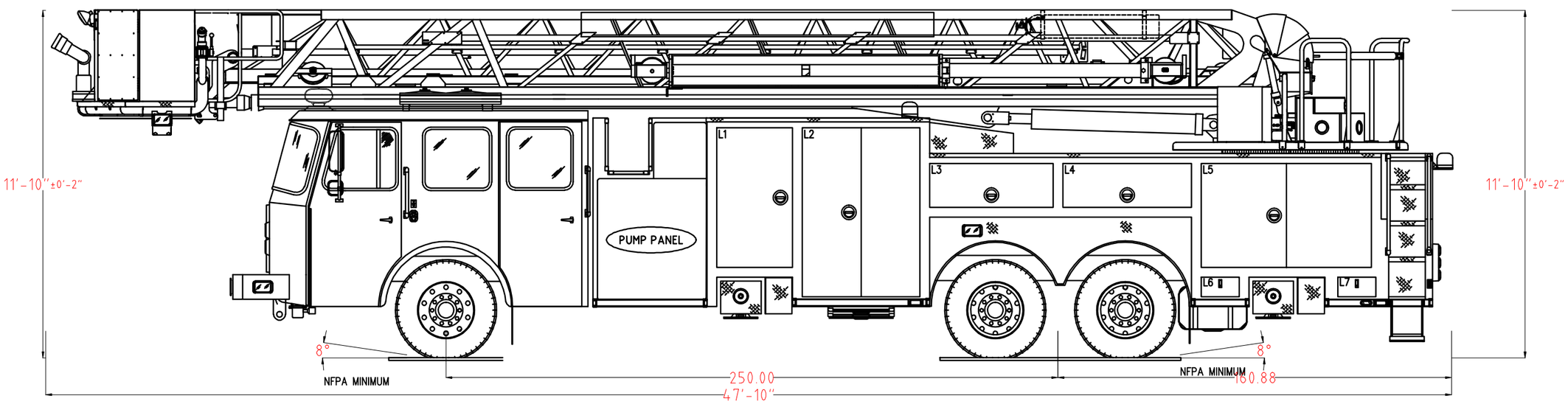

POWERED BY EZDRAW

Notice: This drawing provides a GENERAL REPRESENTATION of the vehicle configuration and should be used for evaluation purposes. The respective dimensions shown,including overall height and length, are estimates and may vary due to manufacturing processes. All other items such as lighting and fixtures, plumbing, compartmentation, and other generally assembled details are shown for REFERENCE ONLY and may not be a direct reflection of the final truck configuration. In ALL situations where this drawing may conflict with the specifications, THE SPECIFICATIONS, AS REFLECTED IN THE APPROVED SHOP ORDER, SHALL PREVAIL. Unless otherwise specified, the proposed apparatus will be manufactured to the latest NFPA recommendations as well as other applicable federally regulated safety regulations. E-One reserves the right to engineer and incorporate design improvements and changes without notice, while adhering to the intent of the specification.

1500 GPM HALE QMAXPUMP
300 TOTAL VOLUME
0 TOTAL FOAM

HOSE LOADS :

	OPENING		INTERIOR DIMENSIONS				
COMPT.	WIDTH	HEIGHT	LOWER WIDTH	LOWER HEIGHT	LOWER DEPTH	UPPER HEIGHT	UPPER DEPTH
L1	31	57	31	57	14	57	17
L2	48	69	48	69	25.5	69	17
L3	50.5	18	50.5	18	N/A	18	26
L4	52.5	18	52.5	18	N/A	18	20
L5	69.5	42.5	69.5	42.5	23	42.5	18
L6	15.5	8	15.5	8	23	8	0
L7	15	8	15	8	23	8	0
R1	31	57	31	57	14	57	16
R2	48	69	48	69	26	69	16
R3	15.5	32.5	15.5	32.5	23	32.5	0
R4	31	20.5	31	20.5	14	20.5	0
R5	36	32.5	36	32.5	23	32.5	0

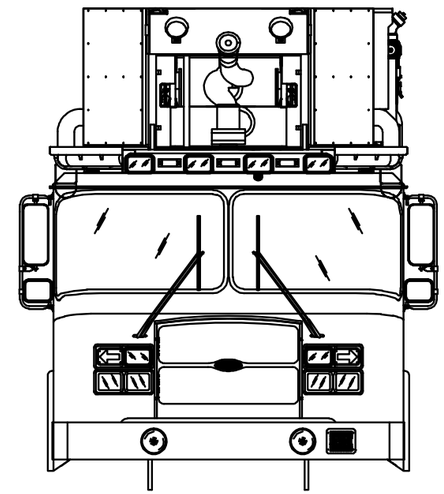

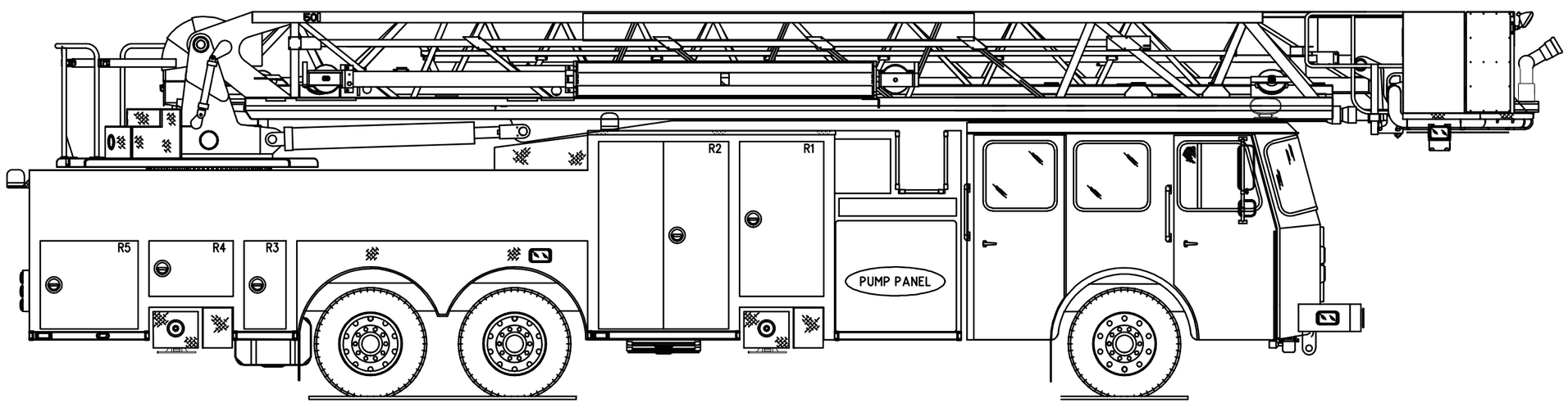

POWERED BY EZDRAW

Fire Apparatus Quotation for:
STATE OF OHIO TERM SCHEDULE

Quotation Number: 36071 Rev: 13

Unit Description: AEMM-CYC2-095P

Quote Description: MM95P Aerial Platform Mid Mount - Cyclone II Chassis Salesperson:

Salescode	Extended Description	Qty	
TESTING COMPLIANCE STANDARD			
1001-0015	The E-ONE supplied components of the vehicle shall meet the requirements of NFPA 1901, 2009 edition.	1	
BUMPERS			
1160-0000	Bumper 10" stainless steel	1	
1160-0010	1/8" Front Bumper Gravel Shield.	1	
1160-0013	16" Front Bumper Gravel Shield Extension.	1	
FRAME ASSEMBLY			
1250-0004	Frame - Torque box for HP95 Mid-Mount aerial.	1	
AXLE OPTIONS			
1025-0013	Meritor FL943 front axle 21,500lb	1	
1025-0024	Meritor RT-58-185 rear tandem axle 60,000lb capacity	1	
1025-0028	Koni shock absorbers for front axle - adjustable.	1	
SUSPENSIONS			
1070-0014	Rear suspension air ride (60-62K) rated equal to the capacity of the axles.	1	
WHEEL OPTIONS			
1050-0001	Aluminum wheels for front axle (2).	1	
1050-0005	Aluminum wheels for rear axles (8).	1	
TIRE OPTIONS			
1060-0023	Eight Michelin 315 rear tires with Mud and Snow tread	1	
1060-0045	Two Michelin 445 tires model XFE for front axle.	1	
1060-0050	Tire pressure monitoring valve stem caps.	1	

Salescode	Extended Description	Qty	
BRAKE SYSTEMS			
1100-0000	16-1/2" x 6" S-cam brakes with ArvinMeritor automatic slack adjusters for front axle	1	
1100-0006	Parking brake release mounted on the driver's side lower dash	1	
1100-0008	Brake system air 6X4.	1	
1100-0014	ArvinMeritor 16-1/2" x 7" S-cam brakes with cast brake drums for a tandem rear axle	1	
AIR SYSTEM OPTIONS			
1110-0000-001	Inlet for air system. Location: driver door jamb	1	
1110-0002	Air dryer Bendix AD-9	1	
1110-0006	Air lines nylon	1	
1110-0026	Air horns recessed in bumper (PR)	1	
1110-0027	Isolated air tank. Includes pressure protection valve.	1	
1110-0043	Auxiliary air tank to be plumbed to the following optional accessories (if equipped):Chassis air horns, brake system air outlet, air reel and light tower.	1	
ENGINES & TRANSMISSIONS			
1200-0017	Push button transmission selector	1	
1200-0021	Trans Synd synthetic transmission fluid for EVS 4000.	1	
1200-0059	Eng/Trans Cummins ISM 450HP/EVS4000 2007 EPA Compliant Engine	1	
1200-0096	Electronically limited speed to 60 MPH.	1	
SECONDARY BRAKING			
1125-0002	Brake Jacob's engine compression	1	
COOLING PACKAGE			
1800-0005	Cooling system for use with Cyclone II X, Typhoon X, and Quest chassis. Includes coolant recovery system.	1	
FUEL SYSTEMS			
1350-0001	Fuel fill package dual. Additional fuel fill provided on officer side of unit.	1	
1350-0005	Fuel system 65 gallons	1	
1350-0013	Fuel water Racor separator to be a bottom drop out style. Shall include indicator light and audible alarm.	1	
1350-0022	Fuel line hose rubber.	1	
ALTERNATOR			

Salescode	Extended Description	Qty	
ALTERNATOR			
1700-0005	Alternator Leece Neville 320amp. 320 Amp SAE/275 NFPA Neville	1	
BATTERIES			
1400-0002	Battery four group 31 1000CCA	1	
CHASSIS OPTIONS			
1680-0005	Thermatic Fan Clutch	1	
1680-0007	Drivelines 1810. Required on 1550 lb/ft torque engines	1	
1680-0008	Tow eyes front painted below bumper / cab (PR).	1	
1680-0012	Tow eyes rear frame painted	1	
1680-0017	Hotshift PTO	1	
CAB MODEL			
1520-0008	Cyclone II X medium cab with 58" CA	1	
CAB ROOF TYPE			
1615-0010	Cab roof to be "flat" (non-vista).	1	
CAB BADGE PACKAGE			
1610-0000	Cab and body to have applicable E-ONE logos.	1	
CAB DOOR OPTIONS			
1550-0003	Rear crew cab doors in the medium position.	1	
1550-0006	Driver and Officer cab door windows. Include rear fixed window.	1	
1550-0011	Rear crew cab door windows. Includes manual roll-down actuation. Not available with paddle style door latching.	1	
1550-0016	Door panels cab ABS	1	
1550-0025	All cab doors shall have "L" style exterior latches.	1	
1550-0027	Front cab door windows to manually roll up.	1	
1550-0037-659	(4) Incandescent cab step area lighting. Locate each light in on each cab door in the inboard position. Lights to be switched with door ajar.	1	
1550-0044	All cab door kick plates to be made from diamond plate aluminum.	1	
1550-0059-000-72	Reflective Yellow/Red striping positioned in the "A" formation located in the lower cab door panels	1	
MIRRORS			
1670-0003	Velvac #2010 mirrors. Door mounted with remote control and heat.	1	

Salescode	Extended Description	Qty	
MISC EXTERIOR CAB OPTIONS			
1550-0020	Windows cab side fixed driver's side	1	
1550-0033	Windows cab side fixed officer's side	1	
1675-0022	Pair of 18" handrails located just behind driver and officer front door one each side	1	
1675-0024	Pair of 36" handrails located just behind driver and officer rear door (ALS doors if equipped) one each side.	1	
1675-0030	Mud flaps, front, black with E-ONE logo.	1	
1675-0047	Rear cab wall to be 3/16" aluminum diamond plate.	1	
HVAC			
1515-0018	Air conditioning for the CII X and Quest with Cummins ISM or Detroit Diesel Series 60 engine, roof top mounted condensor.	1	
SEATS			
1510-0003	Seats 911 Brand.	1	
1510-0007	Seat cover material vinyl.	1	
1510-0008	Seat color gray	1	
1510-0035-147	Universal air pack bottle bracket (EA). Location: officer's seat	1	
1510-0035-148	Universal air pack bottle bracket (EA). Location: rear facing driver's side	1	
1510-0035-151	Universal air pack bottle bracket (EA). Location: inboard driver's side rear wall	1	
1510-0035-152	Universal air pack bottle bracket (EA). Location: inboard officer's side rear wall	1	
1510-0035-215	Universal air pack bottle bracket (EA). Location: rear facing officer's side	1	
1510-0038	Driver seat 911 air ride.	1	
1510-0042	Officer seat to be 911 fixed SCBA	1	
1510-0050	Rear facing 911 seat with SCBA driver's side	1	
1510-0053	Rear facing 911 seat with SCBA officer's side	1	
1510-0062	Two man bench centered on rear wall with 911 SCBA backs.	1	
1685-0033	Seating capacity tag of six occupants.	1	
MISC INTERIOR CAB OPTIONS			
1685-0000	Cab interior gray. Does not include engine cover or seat color.	1	
1685-0005	Lexan sun visors, driver and officer's side overhead	1	
1685-0057	Heater Rear with Cover (PR) and front heater with heat to the feet for the driver and officer	1	
1685-0116	Interior grab handle rubber covered (2). Locate one each side at interior of front	1	

Salescode	Extended Description	Qty	
MISC INTERIOR CAB OPTIONS			
	cab door opening (at rear of opening).		
CAB ELECTRICAL OPTIONS			
1750-0019	Battery charger Super Smart 110 volt, 20 amp.	1	
1750-0029	Switch horn button two position DOT/air horn	1	
1750-0046-195	Cab Headlights. Position: lower	1	
1750-0059-179-04	Receptacle inlet 20amp with a Yellow cover. Location: outside driver's door next to handrail	1	
1750-0072-593	12 volt electrical outlet in the cab wired battery hot. Location: officer side dash.	2	
1750-0075	English dominant main cab gauge cluster.	1	
1750-0083-172	Turn signal Federal Signal QuadraFlare QL64Z-ARROW LED amber pair located upper headlight bezel	1	
1750-0198-A31	Battery charger to be located behind driver's seat.	1	
5400-0037	Dome Lts Red/White Incandescent. Package includes two lights mounted in the front and two mounted in the rear of the cab. White light wire through door and light assembly mounted switch. Red light through light assembly mounted switch.	1	
BODY MODEL			
3080-0031	HP95 MidMount front body with pump.	1	
3080-0034	HP95 MidMount center body with pump and 300g tank.	1	
3080-0041	HP95 MidMount rear body with hosebed.	1	
BODY COMPT REAR			
3110-0058	Rear of body to have flush un-painted smooth plate body panels to facilitate rear body striping.	1	
AERIAL BODY OPTIONS			
3310-0018	Auxiliary jack pads 24X24 (4). Includes pads with side mounted handle and mounting brackets to store (2) each side of the body next to front drop down jacks.	1	
3310-0032	Recessed tubes for (6) pike poles. Not available on HP75 SideStacker.	1	
3310-0037	Rear ladder tunnel doors. Vertically hinged diamond plate.	1	
3310-0057	Crosslay double to hold up to 400' of 2.0" DJ (each).	1	
DOORS			
3300-0007-003	Door single vertically hinged painted. Location(s): L1	1	
3300-0007-004	Door single vertically hinged painted. Location(s): L2	1	

Salescode	Extended Description	Qty	
DOORS			
3300-0007-015	Door single vertically hinged painted. Location(s): R1	1	
3300-0007-016	Door single vertically hinged painted. Location(s): R2	1	
3300-0007-018	Door single vertically hinged painted. Location(s): R4	1	
3300-0008-007	Door double vertically hinged painted. Location(s): L5	1	
3300-0008-017	Door double vertically hinged painted. Location(s): R3	1	
3300-0008-019	Door double vertically hinged painted. Location(s): R5	1	
3300-0011-005	Door single horizontally hinged lift-up painted. Location(s): L3	1	
3300-0030-006	Door double 3-point vertically hinged painted. Location(s): L4	1	
COVERS			
3305-0007-000-02	Vinyl Red hosebed cover with attached rear flap(s).	1	
3305-0008-000-02	Vinyl Red crosslay cover with attached side flaps.	1	
PUMP PANELS			
3134-0012	Officer side upper pump access panel to be horizontally hinged with diamond plate door. Includes (2) push button latches and (2) hold open devices.	1	
3134-0016	Stainless steel driver and officer side pump panels.	1	
3134-0039	The gauge panel on the driver side pump panel is to be hinged upward. Includes two spring type hold opens, two trigger latches, and a recessed handle.	1	
MISC PUMP PANEL OPTIONS			
4460-0003	Pump Panel Tags Color Coded per NFPA Compliance	1	
WATER TANK			
4010-0030	300 gallon "T" water tank.	1	
TANK PLUMBING			
4450-0010	2" Tank Fill Akron Manual Valve	1	
4450-0023	3" Tank to Pump Akron Air Actuated Valve	1	
LADDER STORAGE / RACKS			
3365-0036-603	Center mounted ladder tunnel. Ladder rack to hold: PEL3-35, PEL-24, (2)PRL-16, PRL-14 and FL-10.	1	
HANDRAILS / STEPS			
3330-0002-050	Slideout platform-rollerless. Includes chrome grab handle centered on the frt face of the platform. Located below driver side pump panel.	1	

Salescode	Extended Description	Qty	
MISC BODY OPTIONS			
3090-0001	Hosebed capacity aerial. Provide standard size hosebed.	1	
3090-0002	The unit has no overall height restrictions.	1	
3090-0004	The unit has no overall length restrictions.	1	
3340-0059	Recessed Fuel fills for dual fuel fill application. (1) each side in wheel well.	1	
3340-0093	Mud flaps, rear, black with E-ONE logo.	1	
3340-0107	Diamond plate tandem axle wheel well. Includes bolt-on composite wheel well liners and fenderettes.	1	
3340-0270	The painted aerial body side panels shall be smooth / flush. Applies to SideStacker HB side, panels next to water tank on MM, and upper body sides on RLP.	1	
PUMPS			
4005-0012	Hale 8FGR 1500-2000 GPM Pump single stage	1	
4005-0033	Rating 2000 GPM	1	
PUMP CERTIFICATION			
4475-0000	Pump certification 750-2250 GPM	1	
PUMP OPTIONS			
4015-0007	Pump Cooler	1	
4015-0008	Zinc Anodes for Hale Pump - (Pair) (1) Discharge side and (1) Intake Side	1	
4015-0052-198	Steamers to be Flush Location: driver's side.	1	
4015-0052-199	Steamers to be Flush Location: officer's side.	1	
4015-0073	Manual operated master pump drain. The master drain shall be clearly marked and placed in accessible location rearward below running board on driver side or L1 compartment..	1	
INTAKES			
4440-0005	2.5" Left Intake Akron Manual Valve	1	
INTAKE OPTIONS			
4445-0009	Valve Relief Intake - Akron	1	
DISCHARGES AND PRECONNECTS			
4415-0012-654	1.5" Crosslay with Akron Manual Valve. Location: crosslay 1 & 2	2	
4415-0014-581	2.5" Left Pump Panel Discharge Akron Manual Valve. Location: left side discharge 1	1	
4415-0014-582	2.5" Left Pump Panel Discharge Akron Manual Valve. Location: left side discharge	1	

Salescode	Extended Description	Qty	
DISCHARGES AND PRECONNECTS			
	2		
4415-0016-584	2.5" Right Pump Panel Discharge Akron Manual Valve. Location: right side discharge 2	1	
4415-0034-583	3" Right Pump Panel Discharge Akron Manual Valve Location: right side discharge 1	1	
4415-0052	4" Waterway Discharge with 4" Akron Electric Valve	1	
DISCHARGE OPTIONS			
4417-0058-359	Bleeder Drain Valve Plumbed to: waterway discharge	1	
4417-0058-573	Bleeder Drain Valve Plumbed to: crosslay preconnect	2	
4417-0058-575	Bleeder Drain Valve Plumbed to: left discharge	2	
4417-0058-576	Bleeder Drain Valve Plumbed to: right discharge	2	
PRESSURE GOVERNORS			
4465-0005	Class1 Captain pressure governor.	1	
GAUGES			
4435-0001	Class 1 Intelli-Tank Water Tank Level Gauge	1	
4435-0013	Class 1 Pressure 4.5" Gauge (30-0-600 PSI)	2	
4435-0015-352	2.5" Class 1 Pressure Gauge (30-0-600). Discharge: 1.5 in. crosslay preconnect	2	
4435-0015-359	2.5" Class 1 Pressure Gauge (30-0-600). Discharge: waterway discharge	1	
4435-0015-581	2.5" Class 1 Pressure Gauge (30-0-600). Discharge: left side discharge 1	1	
4435-0015-582	2.5" Class 1 Pressure Gauge (30-0-600). Discharge: left side discharge 2	1	
4435-0015-583	2.5" Class 1 Pressure Gauge (30-0-600). Discharge: right side discharge 1	1	
4435-0015-584	2.5" Class 1 Pressure Gauge (30-0-600). Discharge: right side discharge 2	1	
4435-0069	Enfo IV System on Pump Operator's Panel	1	
ELECTRICAL SYSTEMS			
5010-0003	Multiplex modem kit. Includes cable, modem, and adapter harness.	1	
5010-0004	Multiplex Data Logger	1	
5010-0005	Multiplex electrical system for aerials.	1	
5010-0013-E91	Vehicle data recorder - 2009 NFPA compliant. Includes occupant detection with display. Display location: Driver side of center dash electrical cover.	1	
LIGHT BARS			

Salescode	Extended Description	Qty	
LIGHT BARS			
5300-0021	Light bar Federal Signal JetStream 60" LED. Red Solaris reflectors with clear domes. NFPA Compliant, does not require 2 addl side facing bars. Location: Centered on the front cab roof	1	
WARNING LIGHT PACKAGES			
5550-0057-538	Federal Signal QuadraFlare LED lower level warning light package. Includes (8) QL64XF-R LED light heads with bezels and (2) Model 3300-04 LED light heads. Locate side facing lights: at forward most position, in rear wheelwell offset to front, and side facing at rear of body in rubrail if equipped.	1	
5550-0067	Flash rate for Federal QuadraFlare LED lower level warning lights to be set at pattern 4, alternating quad flash (75 QFPM).	1	
WARNING LIGHTS			
5600-0034-479-09	Federal Model SY12FS Sentry (PR) with driver amber, officer red domes. Location: rear upper body on aerial style brackets.	1	
5600-0149-170	Hazard (door ajar) light 2.5" incandescent. Location: center overhead	1	
SIRENS			
5500-0009	Federal PA300 siren recessed mounted.	1	
5500-0024-170	The electronic siren control is to be located on the center overhead.	1	
SPEAKERS			
5510-0029-209	Speaker Federal Dynamax ES100-EF thru bumper. Location: driver side front bumper.	1	
DOT LIGHTING			
5150-0017	License plate light LED with chrome housing located at the rear of the body.	1	
5150-0026	Marker light LED body/cab package. E-ONE custom cab with aerial ladder, Mid-Mount platform or Bronto bodies only.	1	
5150-0039	Marker lights Britax amber/red rubber housed mounted on the rear body corners angled down.	1	
5150-0061	Federal Signal QuadraFlare LED horizontal mount taillights. Includes LED stop/tail, turn and backup lights with horizontal Cast 3 housing and weatherproof connectors.	1	
5150-0080-462	Weldon auxiliary turn signal model 9186-8580 LED (PR). Location: (1) each side in center of rear tandem wheelwell	1	
LIGHTS - COMPARTMENT, STEP & GROUND			
5380-0010	Compartment light package incandescent for large bodies.	1	
5380-0029	Ground light package for cab and body - large.	1	

Salescode	Extended Description	Qty	
LIGHTS - COMPARTMENT, STEP & GROUND			
5380-0035	Step light package body - large.	1	
LIGHTS - DECK AND SCENE			
5390-0000-457	Deck Light - Unity 12V (PR) Location: (1) each side up high rear of body	1	
5390-0003	Hosebed light Trucklite. Locate center front of hosebed. Switched with work light switch in cab.	1	
5390-0004	Crosslay lights Weldon. Locate on each side at rear of crosslay approx. 16" from side of body.	1	
LIGHTS - NON-WARNING			
5400-0003	Engine Compartment Light (EA).	1	
5400-0008	(1) pump panel light over the pump control area to be wired to come on when pump shift is placed to pump.	1	
5400-0010	Incandescent pump compartment light (EA).	1	
5400-0039	Spotlight Specialty 2150 hand held located on officer's side of cab dash - hardwired.	1	
5400-0049	Pump panel light package - RLP/MM. Includes (2) lights per side pump panel and (2) lights for angled upper control panel.	1	
CONTROLS / SWITCHES			
5100-0000-198	Foot Switch to control air horns located driver's side	1	
5100-0000-199	Foot Switch to control air horns located officer's side	1	
5100-0007-198	Foot Switch to control electronic siren located driver's side	1	
MISC ELECTRICAL			
1750-0082-762	12V power distribution module. Includes (6) battery hot and (6) switched hot circuits. 100 amps max (IATS). Location: behind officer's seat	1	
5110-0017	Back up alarm 97 dB(A).	1	
AERIAL MODEL			
6100-0008	Platform HP95 Mid-Mount. Includes driver side roll top console, level assist and jack leg flood lights.	1	
AERIAL HYDRAULIC SYSTEM OPTIONS			
6150-0003-216	Gauge aerial hydraulic oil level. Electronic display to be located on pump operators panel.	1	
MONITORS			
6300-0007	Monitor Akron electric 1250GPM for platform. Includes tip controls, base controls	1	

Salescode	Extended Description	Qty	
MONITORS			
	and butterfly valve.		
6300-0017	Monitor painted silver from OEM.	1	
AERIAL WARNING LIGHTS			
6550-0001	Outrigger warning lights (PR) LED. Trucklite Model 91R	1	
AERIAL LIGHTING			
6560-0002-237	Spot light 12V located center front of platform.	1	
6560-0005	Flood lights Unity at base (PR).	1	
WATERWAY OPTIONS			
6350-0006	2.5" Waterway pressure gauge. Locate next to waterway inlet.	1	
6350-0009	Right side 4" NST waterway inlet for Mid-Mount Boom or Platform. Includes chrome cap.	1	
6350-0012-192	Akron 2.5" valve for platform. Valve to be located at the front of platform next to monitor.	1	
6350-0014	2.5" chrome elbow with 2.5" x 1.5" reducer and 1.5" cap for platform discharge valve.	1	
MISC AERIAL ELECTRICAL			
6570-0008	Intercom aerial 2-way. Atkinson Dynamics (Federal). Speaker to be located to rear of platform on Bronto units.	1	
6570-0013	Aerial Information System (AIS) for platform. Includes engine information.	1	
BREATHING AIR			
6400-0003	Breathing air platform with (1) 444CF cylinder. Includes low air alarm.	1	
AERIAL EQUIPMENT			
6500-0011-138	Pike pole tube for 6' pole on ladder. Location: left side fly section.	1	
6500-0016	Lifting eyes on platform (PR). Not available on Bronto.	1	
6500-0019-266	Axe bracket mounted on aerial. Location: right side inside of platform	1	
SIGN PLATES			
6750-0001-000-39	Aerial sign plates 16 x 144 (PR). Available on HP95 only. Does not include lettering. Color: Job Color	1	
AERIAL TESTING			
6900-0000	Aerial flow test - 3rd party.	1	

Salescode	Extended Description	Qty	
AERIAL TESTING			
6900-0002	Aerial 2009 NFPA Certification.	1	
HAND TOOLS			
7600-0005	Pike Pole Fiberglass 6'	2	
7600-0006	Pike Pole Fiberglass 8'	2	
7600-0008	Pike Pole Fiberglass 12'	2	
GROUND LADDERS			
7800-0007	Alco-Lite PRL-14 Roof Ladder	1	
7800-0010	Alco-Lite PRL-16 Roof Ladder	2	
7800-0016	Alco-Lite PEL-24 Extension Ladder	1	
7800-0023	Alco-Lite PEL3-35 3 Section Extension Ladder	1	
7800-0032	Alco-Lite 10' Folding Ladder w/Shoes - FL10 Alco-Lite 10FT folding aluminum ladder with safety shoes.	1	
MISC LOOSE EQUIPMENT			
7600-0016	Wheel Chocks 44" NFPA Complaint - Pair of Zico SAC-44. Up to 44" diameter Tires. Includes mounting bracket.	4	
7900-0014	DOT Required Drive Away Kit - Kit includes three (3) triangular warning reflectors with carrying case. This kit is for the end user and is to remain with the truck.	1	
EXTERIOR PAINT			
8100-0116	Rear body surface to have a sanded finish (not painted job color). Includes hinged doors that do not have discrete sales codes and removable panels.	1	
8100-0176-000-17	Paint E-One chassis cab - Sikkens paint. Color: FLNA3225 Red.	1	
8100-0183-000-17	Paint Body - Large - For Aerials, T/A Tankers, Rear Mounts and Rescues. Sikkens paint. Color: FLNA3225 Red.	1	
INTERIOR PAINT			
8150-0010	The interior of the cab to be paint OTO gray	1	
LETTERING			
8200-0011-000-41	Scotchlite Letters (60) - 3". Color Gold.	1	
8200-0022	Shade and outline for lettering.	1	
8200-0023	Lettering Instructions:	1	Per FD Instruction
8200-0033-000-41	Scotchlite Letter (Each) - 8". Color Gold.	36	
STRIPING			

Salescode	Extended Description	Qty	
STRIPING			
8200-0015	White Reflective Tape on 2 Outriggers	1	
8300-0003-333-12	NFPA Scotchlite Stripe - 6" wide and straight on front/sides of cab and sides/rear of body. Color: White. Location: top of stripe flush with top of bumper and straight back.	1	
8300-0042	White rubrail scotchlite insert.	1	
8300-0084-000-72	Chevron "A" style 6" printed sheet Scotchlite striping on rear of body. Includes rear facing extrusions, panels and doors inboard/outboard of the beavertails(if applicable). Colors to be Yellow/Red.	1	
WARRANTY / STANDARD & EXTENDED			
9100-0000	Standard 1 Year Warranty	1	
9100-0003	Lifetime Frame Warranty	1	
9100-0004	10 Year/100,000 Mile Structural Warranty - Statement of Warranty	1	
9100-0005	10 Year Stainless Steel Plumbing Warranty - Statement of Warranty	1	
9100-0007	20 Year Aerial Device Structural Warranty - Integrity Limited Warranty	1	
9100-0019	10 Year Limited Paint and Perforation Warranty - For Sikkens Paint	1	
SUPPORT, DELIVERY, INSPECTIONS AND MANUALS			
9300-0000	Vehicle familiarization aerial (Domestic).	1	
9300-0009	Manuals, Operator and Service CD-ROM.	1	
9300-0016	Approval Drawings-Standard	1	
PRICE			$866,814.

STATE OF OHIO TERM SCHEDULE

4200 SURFACE RD
COLUMBUS, OH 43228

Quote No: 36071

1/7/2010

Quote Rev:13 Drawing Rev:2

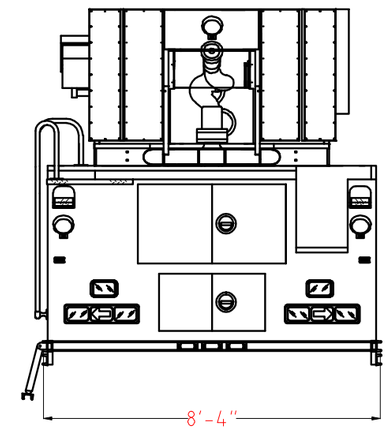

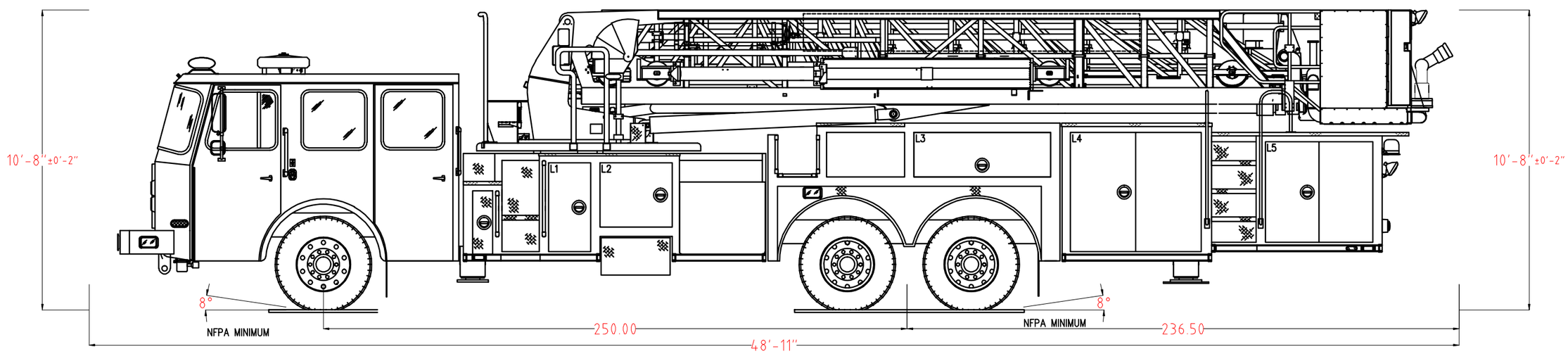

POWERED BY EZDRAW

Notice: This drawing provides a GENERAL REPRESENTATION of the vehicle configuration and should be used for evaluation purposes. The respective dimensions shown,including overall height and length, are estimates and may vary due to manufacturing processes. All other items such as lighting and fixtures, plumbing, compartmentation, and other generally assembled details are shown for REFERENCE ONLY and may not be a direct reflection of the final truck configuration. In ALL situations where this drawing may conflict with the specifications, THE SPECIFICATIONS, AS REFLECTED IN THE APPROVED SHOP ORDER, SHALL PREVAIL. Unless otherwise specified, the proposed apparatus will be manufactured to the latest NFPA recommendations as well as other applicable federally regulated safety regulations. E-One reserves the right to engineer and incorporate design improvements and changes without notice, while adhering to the intent of the specification.

2000 GPM PUMP
300 TOTAL VOLUME
0 TOTAL FOAM

HOSE LOADS :

	OPENING		INTERIOR DIMENSIONS				
COMPT.	WIDTH	HEIGHT	LOWER WIDTH	LOWER HEIGHT	LOWER DEPTH	UPPER HEIGHT	UPPER DEPTH
L1	18	38	18	38	N/A	38	0
L2	31	27.5	31	27.5	N/A	27.5	3
L3	58.5	19	58.5	19	N/A	19	25
L4	56	51	56	51	26	51	22
L5	46	43	46	43	26	43	22
R1	18	38	18	38	N/A	38	20
R2	31	27.5	31	27.5	N/A	27.5	3
R3	56	28.13	56	28.13	26	28.13	21
R4	19	24	19	24	26	24	21
R5	46	24	46	24	26	24	21

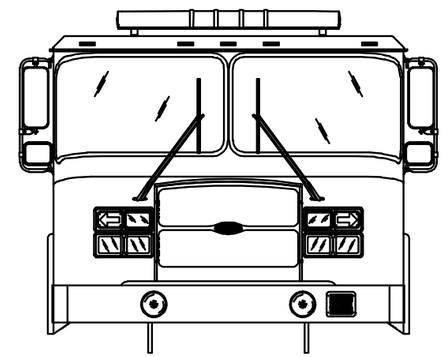

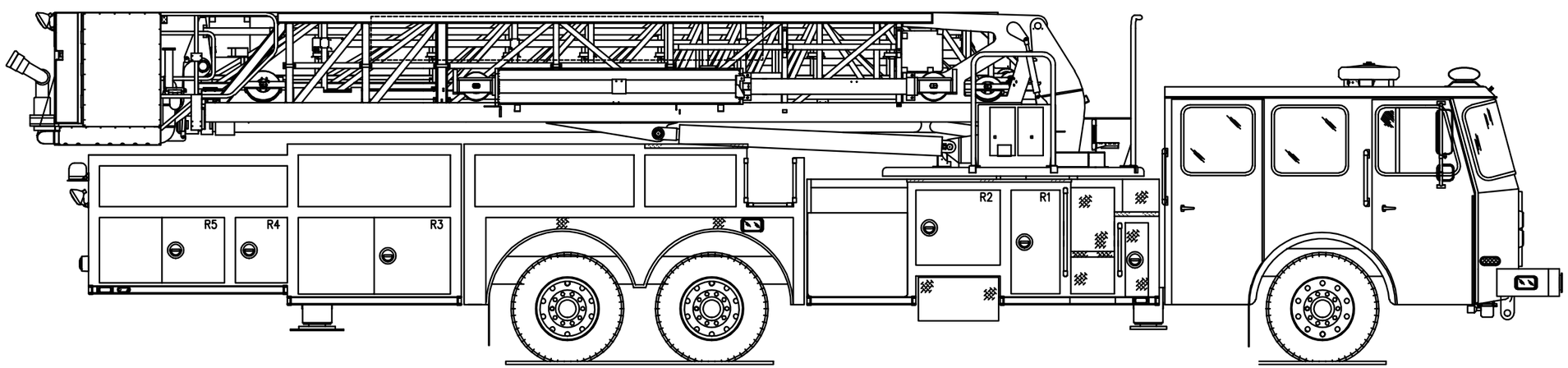

POWERED BY EZDRAW

CUSTOM CHASSIS - MAINLINE AERIALS

1000	Chassis	
1025-0002	Dana 22I 22,800lb front axle.	$17,010
1025-0005	Meritor FL941 front axle 18,700lb	$15,419
1025-0006	Meritor FL941 front axle 20,000lb	$15,976
1025-0007	Meritor FL941 front axle 21,000lb	$15,976
1025-0010	Meritor FL943 front axle 18,700lb	$16,199
1025-0011	Meritor FL943 front axle 20,000lb	$16,870
1025-0012	Meritor FL943 front axle 21,000lb	$17,092
1025-0013	Meritor FL943 front axle 21,500lb	$17,429
1025-0018	Meritor RS-30-185 single rear axle 31,000lb capacity	$12,850
1025-0022	Meritor RT-50-160 rear tandem axle 52,000lb capacity	$34,631
1025-0023	Meritor RT-50-160 rear tandem axle 54,000lb capacity	$34,631
1025-0024	Meritor RT-58-185 rear tandem axle 60,000lb capacity	$43,569
1025-0027	Driver controlled rear differential	$732
1025-0028	Koni shock absorbers for front axle - adjustable.	$317
1025-0029	Front Shock absorbers	$170
1025-0030	Stemco oil seal front axle. Chicago Rawhide seal with Stemco sight glass will be supplied when front disc brakes a selected.	$103
1025-0031	Spiral pins front suspension	$1,591
1025-0034	Automatic traction control. In addition to standard ABS system.	$548
1025-0035	Koni shock absorbers Rear axle	$504
1025-0036	Automatic Traction Control System 6x4/6x6	$1,874
1025-0038	Meritor RT-58-185 rear tandem axle 62,000lb capacity.	$51,389
1025-0039	Rear steer axle FL941 21,500lb for tiller.	$22,929
1025-0060	Meritor FL943 front axle 22,100lb	$18,083
1025-0064	Independent front axle/suspension - 18,000 lb. Not available with Series 60 engine.	$31,682
1025-0065	Independent front axle/suspension - 20,000 lb. Not available with Series 60 engine.	$31,682
1025-0066	Independent front axle/suspension - 22,800 lb. Not available with Series 60 engine.	$31,682
1025-0067	Independent front axle/suspension - 24,000 lb. Not available with Series 60 engine.	$31,682
1025-0071	Meritor RS-30-185 single rear axle 33,000lb capacity.	$12,850
1025-0073	Meritor RS-30-185 single rear axle 31,500lb capacity	$12,850
1025-0074	Independent front axle/suspension rated at 18,700 lb due to tires (Uses 20,000 lb springs).	$31,682
1025-0075	Independent front axle/suspension rated at 21,000 lb due to tires (Uses 22,800 lb springs).	$31,682
1025-0076	Independent front axle/suspension rated at 21,500 lb due to tires (Uses 22,800 lb springs).	$31,682
1025-0077	Rear steer axle FL941 22,100lb for tiller. Requires 445 tires.	$22,929
1025-0078	S-Cam brakes to have Haldex brand slack adjusters (per axle).	$289
1025-0086	Meritor FL941 front axle 18,500lb.	$15,419
1025-0087	Dana S35-590 single rear axle 32,500lb capacity. Requires Bendix rear brakes.	$16,346
1025-0088	Synthetic 75w90 gear oil for rear axle.	$348
1050-0000	Steel wheels for front axle (2).	$299
1050-0001	Aluminum wheels for front axle (2).	$1,624
1050-0002	Steel wheels for rear axle (4).	$596
1050-0003	Aluminum wheels for rear axle (4).	$3,243
1050-0005	Aluminum wheels for rear axles (8).	$6,485
1050-0007	Front axle wheel trim kit. Includes stainless steel lug nut covers and center cap with E-ONE logo. Note: Center cap will have an inspection port IPO a logo if equipped with Stemco oil seals.	$217
1050-0008	Rear axle (single) Wheel Trim kit. Includes stainless steel lug nut covers (chrome plated plastic if applicable) and center cap with E-ONE logo. E-ONE custom chassis w/ steel wheels will have chrome plated plastic lug covers.	$266
1050-0009	Rear axle (tandem) Wheel Trim kit. Includes stainless steel lug nut covers (chrome plated plastic if applicable) and center caps with E-ONE logo. E-ONE custom chassis w/ steel wheels will have chrome plated plastic lug covers.	$596
1050-0017	Each inside wheel of the single rear axle shall have valve stem extensions.	$108
1050-0018	Each inside wheel of the tandem rear axles shall have valve stem extensions.	$215
1050-0019	Two steel wheels painted job color on both the inside and outside facing for front axle.	$577
1050-0026	Front axle Wheel Trim kit. Includes stainless steel lug nut covers and center cap (no logo). Note: Center cap will have an inspection port if equipped with Stemco oil seals.	$217
1050-0027	Rear axle (single) wheel trim kit. Includes stainless steel lug nut covers (chrome plated plastic if applicable) and center caps (no logo). E-ONE custom chassis w/ steel wheels will have chrome plated plastic lug covers.	$266
1050-0028	Rear axle (tandem) Wheel Trim kit. Includes stainless steel lug nut covers (chrome plated plastic if applicable) and center cap (No logo). E-ONE custom chassis w/ steel wheels will have chrome plated plastic lug covers.	$596
1050-0031	Front axle wheel simulator kit. Includes stainless steel wheel simulator and center cap with E-ONE logo. Note: Center cap will have an inspection port IPO a logo if equipped with Stemco oil seals.	$522
1050-0032	Rear axle (single) wheel simulator kit. Includes full stainless steel wheel simulators with integrated lug nut covers and E-ONE logo.	$761
1050-0033	Dura-Brite finish on aluminum wheel (EA). Not available on 13" wheel (425 or 445 tires).	$97
1050-0038	Steel wheels for rear axle (4) 24" split rim.	$6,163
1050-0039	Polish inner and outer aluminum wheel (EA).	$79
1050-0040	Tyron wheel safety bands (PR). Location: [#LOC].	$800
1050-0042	Two heavy duty steel wheels for front axle. For use with 21.5K and greater ratings only.	$1,532
1050-0043	Rear axle (tandem) wheel simulator kit. Includes full stainless steel wheel simulators with integrated lug nut covers and E-ONE logo.	$1,522

1050-0044	Accuride aluminum wheels for front axle (2).	$1,576
1050-0045	Accuride aluminum wheels for rear axle (4).	$3,148
1050-0046	Accuride aluminum wheels for rear axles (8).	$6,295
1050-0047	Front axle wheel trim kit. Includes stainless steel "Cover-Up" covers with E-ONE logo. Not available with Stemco oil seals.	$279
1050-0048	Rear axle (single) Wheel Trim kit. Includes stainless steel "Cover-Up" covers with E-ONE logo. Not available with Stemco oil seals.	$357
1050-0049	Rear axle (tandem) Wheel Trim kit. Includes stainless steel "Cover-Up" covers with E-ONE logo.	$714
1060-0001	Two Michelin 315 tires model XZA-1 for front axle	$1,311
1060-0004	Four Michelin 11R tires model XZE2 for rear axle	$2,124
1060-0005	Four Michelin 12R tires model XZE for rear axle	$2,460
1060-0006	Four Michelin 315 tires model XZA-1 for rear axle	$2,507
1060-0009	Eight Michelin 315 tires model XZA-1 for rear axles	$5,011
1060-0010	Two Goodyear 315 tires for front axle	$1,543
1060-0011	Two Goodyear 385 tires for front axle	$1,706
1060-0012	Two Goodyear 425 tires for front axle	$1,863
1060-0013	Two Goodyear 445 tires for front axle	$2,008
1060-0016	Four Michelin 12R rear tires with Mud and Snow tread	$2,906
1060-0017	Four Michelin 315 rear tires with Mud and Snow tread	$2,951
1060-0018	Four Goodyear 11R rear tires with Mud and Snow tread	$2,906
1060-0019	Four Goodyear 12R rear tires with Mud and Snow tread	$3,241
1060-0020	Four Goodyear 315 rear tires with Mud and Snow tread	$3,411
1060-0023	Eight Michelin 315 rear tires with Mud and Snow tread	$5,900
1060-0026	Eight Goodyear 315 rear tires with Mud and Snow tread	$6,817
1060-0028	Four Goodyear 11R rear tires with highway tread	$2,460
1060-0029	Four Goodyear 12R rear tires with highway tread	$2,906
1060-0030	Four Goodyear 315 rear tires with highway tread	$3,130
1060-0032	Eight Goodyear 12R rear tires with highway tread	$5,810
1060-0033	Eight Goodyear 315 rear tires with highway tread	$6,259
1060-0042	Two Michelin 365 tires model XZA for front axle. Speed rating for up to 75 mph. Requires alum wheels.	$1,289
1060-0043	Two Michelin 425 tires model XZY3 for front axle	$1,576
1060-0044	Two Michelin 445 tires model XZY3 for front axle.	$1,560
1060-0045	Two Michelin 445 tires model XFE for front axle.	$1,735
1060-0046	Two Michelin 425 tires model XFE for front axle.	$1,471
1060-0047	Two Michelin 385 tires model XFE for front axle.	$1,355
1060-0048	Four Michelin 12.00 x 24 tires model XZY LRH for rear axle. Note: Tires have an operating restriction per Michelin bulletin MSPN29163 (maximum one-way distance of 50-miles with a one (1) hour cool down).	$3,774
1060-0049	Tyron tire pressure monitoring system model TPMS. Includes wireless remote display in cab.	$1,032
1060-0050	Tire pressure monitoring valve stem caps.	$148
1060-0051	Two Michelin 385 tires model XZY3 for front axle	$1,460
1060-0053	PressurePro tire pressure monitoring system for single rear axle units. Includes bail mounted display in cab.	$878
1060-0054	PressurePro tire pressure monitoring system for tandem rear axle units. Includes bail mounted display in cab.	$1,050
1060-0060	Two Michelin 315 tires model XZY3 for front axle.	$1,042
1070-0001	Rear suspension springs rated equal to the capacity of the axle	$1,231
1070-0002	Rear suspension springs rated equal to the capacity of the axles	$3,856
1070-0003	Rear suspension air ride rated equal to the capacity of the axle	$5,004
1070-0004	Rear suspension air ride (40-46K) rated equal to the capacity of the axles.	$8,723
1070-0005	Air ride cab.	$2,573
1070-0007	Shock absorbers rear single axle. Not available on 31,000lb.	$170
1070-0012	Reyco rear suspension springs rated equal to the capacity of the axle.	$1,231
1070-0014	Rear suspension air ride (60-62K) rated equal to the capacity of the axles.	$11,797
1070-0015	Ridewell Dynalastic rear suspension (52-54K) rated equal to the capacity of the axles.	$11,491
1070-0017	Reyco rear spring suspension w/aux 33K rating.	$1,848
1070-0019	Rear suspension springs rated at 27,000 lbs.	$1,435
1100-0000	16-1/2" x 6" S-cam brakes with ArvinMeritor automatic slack adjusters for front axle	$281
1100-0001	Meritor EX225H 17" disc brakes for front axle.	$1,097
1100-0002	ArvinMeritor 16-1/2" x 7" S-cam brakes with cast brake drums for a single rear axle	$281
1100-0003	Meritor EX225H 17" disc brakes for rear axle, maximum capacity 27,000lb.	$1,097
1100-0004	Meritor EX225H 17" disc brakes for rear axles, maximum capacity 54,000lb.	$1,678
1100-0005	Brake system air 4X2/4X4	$7,433
1100-0007	Parking brake release mounted center of the engine cover	$285
1100-0008	Brake system air 6X4.	$7,700
1100-0009	Brake parking front axle	$469
1100-0010	Brake emergency release for spring	$854
1100-0011	Roll Stability Control, Includes ATC. Not available on commercial chassis, tiller or tandem axle custom chassis	$1,777
1100-0014	ArvinMeritor 16-1/2" x 7" S-cam brakes with cast brake drums for a tandem rear axle	$337
1100-0015	Air brake system tractor/tiller ABS system for both tractor and tiller axle brakes.	$7,598
1100-0016	16-1/2" x 6" Q-Plus S-cam brakes with ArvinMeritor automatic slack adjusters for Tillerman steering axle.	$281
1100-0017	Meritor EX225H 17" disc brakes for Tillerman steering axle.	$1,097
1100-0018	Dust Shields. Front and Rear Axle. CAM Brakes only.	$327
1100-0020	Compression fittings for all air brake system lines. Includes cab interior air lines as applicable.	$1,098
1100-0022	Dust Shields. Front and rear tandem axle. CAM brakes only.	$523
1100-0023	Stainless steel park brake release guard.	$190

1100-0024	G4 Electronic Stability Control (4x2), Includes RSC and ATC. Not available on 4x4, commercial chassis or tiller.	$3,127
1100-0025	ArvinMeritor 16-1/2" x 8.625" Q-Plus S-cam brakes with cast brake drums for a single rear axle. 24K axle only.	$1,157
1100-0026	G4 Electronic Stability Control (6x4), Includes RSC and ATC. Not available on 6x6 or commercial chassis.	$3,730
1100-0027	Knorr-Bremse 17" disc brakes for front axle. IFS only.	$1,097
1100-0028	ArvinMeritor 18" x 7" P-Type S-cam brakes with cast brake drums for a 33K single rear axle.	$2,030
1100-0029	2nd parking brake release mounted on the officer's side dash with stainless steel guard.	$798
1100-0031	Dana ESD225 17" disc brakes for front axle.	$1,097
1100-0032	Hinged stainless steel park brake release guard.	$254
1100-0033	Bendix 16-1/2" x 7" S-cam brakes for 32,500 Dana axle.	$281
1100-0035	Glad Hands tow option. Location: Front chassis frame.	$478
1110-0000	Inlet for air system. Location: [#LOC]	$332
1110-0001	Air inlet auto eject. Includes weatherproof gasketed cover. [#LOC]	$428
1110-0002	Air dryer Bendix AD-9	$432
1110-0003	Air dryer system saver 1200	$522
1110-0004	Tank drains air w/pull cords.	$379
1110-0005	Auto moisture ejectors heated	$376
1110-0007	Air lines braided	$2,024
1110-0008	Gauge air brake application mounted in cab	$272
1110-0011	Gauge air intake restriction	$231
1110-0012	Air outlet off front ACC tank. It shall be located [#LOC]	$332
1110-0013	Air horns shutoff valve. Located in cab accessible by driver.	$96
1110-0025	Thomas 110 volt air compressor plumbed to air brake system.	$1,042
1110-0026	Air horns recessed in bumper (PR)	$738
1110-0027	Isolated air tank. Includes pressure protection valve.	$502
1110-0029	Diamond plate flip cover for air inlet or outlet with label attached with rivets mounted in driver's door jamb.	$102
1110-0041	Air horns Grover recessed in bumper (PR).	$901
1110-0042	Label on isolated air tank "Air Horns Only".	$28
1110-0044	Air inlet auto eject. Includes [#COL] weatherproof gasketed cover. Location: [#LOC]	$428
1110-0045	Gast air compressor 110v model 3HBB-10-M300X.	$962
1110-0046	Kussmaul 12V Auto Drain. For use with Kussmaul air compressor.	$417
1110-0049	Air Lines Wrapped in Thermal Loom	$1,638
1110-0050	Air brake lines to have 4 to 6" slack for future service work.	$99
1110-0052	Air horns recessed behind bumper (PR). Includes Federal Signal EF grilles on bumper.	$929
1110-0053	Air horns Grover recessed in front bumper. (1) air horn 21" long, (1) air horn 24.5" long	$942
1110-0054	Relocate air dryer to opposite the exhaust system inside the frame rails.	$239
1110-0055	Air horns will alternate from driver to officer.	$356
1110-0056	Air dryer Bendix ADIP.	$557
1110-0058	Air horns recessed in bumper (PR) with bells behind bumper.	$791
1110-0066	Air horns Grover recessed in front bumper. (1) air horn 21" long, (1) air horn 24.5" long.	$1,105
1125-0000	Retarder Telma focal mounted. Not available on tandem axle or four jack aerials	$9,051
1125-0002	Brake Jacob's engine compression	$1,566
1125-0003	Transmission retarder Allison	$10,726
1125-0006	Driveline Mounted Telma Retarder. Standard switch location is on console, manual lever on engine cover offset to driver's side. Cut off at 5 mph - 25% applied with throttle release & balance with brake application	$9,051
1125-0007	Tag located at Jacob Brake Controller. To read: Do Not Operate on Wet or Slippery Surfaces.	$69
1125-0012	Driveline Mounted Telma Retarder. All four stages applied with brake application.	$9,051
1125-0013	Lever control for Telma retarder. 5 position lever.	$260
1125-0014	Dual retarder operation. Engine Jacobs brake and transmission retarders to both be operable at the same time. Requires special approval. Option contingent on receiving formal approval from driveline component suppliers.	$106
1150-0054	Hinged diamond plate lid for driver side bumper tray. Includes 1/4 turn latch and gas shock hold open.	$241
1150-0055	Hinged diamond plate lid for center bumper tray. Includes 1/4 turn latch and gas shock hold open.	$265
1150-0056	Hinged diamond plate lid for officer side bumper tray. Includes 1/4 turn latch and gas shock hold open.	$241
1150-0059	Red vinyl lid with velcro fasteners for bumper tray driver side.	$157
1150-0060	Red vinyl lid with velcro fasteners for bumper tray officer side.	$157
1150-0061	Red vinyl lid with velcro fasteners for bumper tray center.	$157
1150-0062	Black vinyl lid with velcro fasteners for bumper tray driver side.	$157
1150-0063	Black vinyl lid with velcro fasteners for bumper tray officer side.	$157
1150-0064	Black vinyl lid with velcro fasteners for bumper tray center.	$157
1150-0065	Diamond plate lid for driver, center, and officer hosetrays. 5.25" high with dual chrome grab hands, rubber hood latches and gas shocks.	$522
1150-0085	Nylon black strap on officer side front bumper tray (EA).	$67
1150-0086	Nylon black strap on driver side front bumper tray (EA).	$67
1150-0087	Nylon black strap on center front bumper tray (EA).	$67
1150-0094	Hinged diamond plate lid for driver side bumper tray. Includes D-Ring latch and gas shock hold open.	$264
1150-0095	Hinged diamond plate lid for center bumper tray. Includes D-Ring latch and gas shock hold open.	$288
1150-0096	Hinged diamond plate for officer side bumper tray. Includes D-Ring latch and gas shock hold open.	$264
1150-0097	Tray driver side bumper outboard for hydraulic/cord reel.	$607
1150-0098	Tray officer side bumper outboard for hydraulic/cord reel.	$607
1150-0100	Hinged floor of center bumper tray. Hinged to the rear.	$671
1150-0102	Diamond plate lid for driver hosetray. 5.25" high with chrome grab handle, rubber hood latch, gas shock and water stop angle.	$342
1150-0103	Diamond plate lid for center hosetray. 5.25" high with chrome grab handle, rubber hood latch, gas shock and water stop angle.	$342

1150-0104	Diamond plate lid for officer hosetray. 5.25" high with chrome grab handle, rubber hood latch, gas shock and water stop angle.	$342
1150-0105	Diamond plate lid for center and driver hosetrays; 2/3 lid. 5.25" high with chrome grab handle, rubber hood latches, gas shocks and water stop angle.	$431
1150-0106	Diamond plate lid for center and officer hosetrays; 2/3 lid. 5.25" high with chrome grab handle, rubber hood latches, gas shocks and water stop angle.	$431
1150-0107	Nylon black strap with clip release on officer side front bumper tray.	$121
1150-0108	Nylon black strap with clip release on driver side front bumper tray.	$121
1150-0109	Nylon black strap with clip release on center front bumper tray.	$121
1150-0111	Additional divider for front bumper hose tray.	$90
1150-0112	Hinged diamond plate lid for center bumper tray. Includes D-Ring latch and moon spring hold open.	$288
1150-0114	Access cover in center bumper tray for center bumper mounted speaker 8"x8" in dimension	$81
1150-0115	Notch bumper tray lid for preconnected hose. Notch location: [#LOC]	$118
1150-0116	Bumper tray driver's side with slats 10 inches deep (approx 9 inches to slats).	$399
1150-0117	Bumper tray driver's side with slats 12 inches deep (approx 11 inches to slats).	$399
1150-0118	Bumper tray driver's side with slats 14 inches deep (approx 13 inches to slats).	$399
1150-0119	Bumper tray center of bumper with slats 10 inches deep (approx 9 inches to slats).	$399
1150-0120	Bumper tray center of bumper with slats 12 inches deep (approx 11 inches to slats).	$399
1150-0121	Bumper tray center of bumper with slats 14 inches deep (approx 13 inches to slats).	$399
1150-0122	Bumper tray officer's side with slats 10 inches deep (approx 9 inches to slats).	$399
1150-0123	Bumper tray officer's side with slats 12 inches deep (approx 11 inches to slats).	$399
1150-0124	Bumper tray officer's side with slats 14 inches deep (approx 13 inches to slats).	$399
1150-0125	Divider center bumper hose tray running front to back with adjustable track (Provides two storage areas, one left and one right of divider).	$209
1150-0126	Divider center bumper hose tray running side to side with adjustable track (Provides two storage areas, one ahead and one behind divider).	$209
1150-0127	Tray center of bumper with slats 34x13x16 with divider running side to side	$607
1150-0128	Notch front bumper tray for speaker/Q2B. Will reduce front hose/equipment load.	$106
1150-0129	Diamond plate lid for center hosetray. Includes chrome grab handle, rubber hood latches and gas shock.	$342
1150-0130	Black nylon cargo net on center front bumper tray.	$260
1150-0131	Extinguisher tube in front bumper extension. Location: [#LOC].	$674
1150-0132	Tray center bumper for hydraulic/cord reel.	$663
1150-0133	Diamond plate raised full lid for extended front bumper. 6" high with dual chrome grab hands, rubber hood latches and gas shocks.	$522
1150-0135	Royal Blue vinyl lid with velcro fasteners for center bumper tray.	$157
1150-0136	Bumper tray center of bumper with slats 16 inches deep (approx 15 inches to slats). Mount tray 1" above gravel shield.	$477
1150-0137	Diamond plate lid for center hosetray and jumpline next to tray. 5.25" high with chrome grab handle, rubber hood latch, gas shock and water stop angle if applicable.	$395
1150-0138	Bumper pan driver's side without slats 4 inches deep with strap. For use with suction strainer only.	$399
1150-0139	Nylon black strap with aluminium quick release buckle for front bumper hose tray. Strap to attach to front and rear walls of tray down low as applicable. Location: [#LOC].	$99
1150-0140	Bumper tray center of bumper with slats 14 inches deep (approx 13 inches to slats). Mount tray 1" above gravel shield.	$477
1150-0141	Bumper tray officer's side with slats 12 inches deep (approx 11 inches to slats). Mount tray 1" above gravel shield.	$477
1150-0142	Hinged diamond plate lid for center bumper tray. Includes (4) sides, 1/4 turn latch and gas shock hold open. For use with raised compts only.	$341
1150-0143	Hinged diamond plate lid for officer bumper tray. Includes (4) sides, 1/4 turn latch and gas shock hold open. For use with raised compts only.	$341
1150-0144	Diamond plate lid for center hosetray and jumpline next to tray. 8.25" high with chrome grab handle, rubber hood latch, gas shock and water stop angle if applicable.	$447
1150-0145	Single crosslay on top of the front bumper gravel shield. Tray to be "U" shape, 10" wide x 8" high x the width of the gravel shield. Vinyl cover, [#COL], with end flaps to cover crosslay, velcro along front edge, fastened along back. Requires 24" extensio	$735
1150-0146	Water stop angle. Gravel shield mounted. Requires raised lid and/or 28" bumper extension with reel trays.	$170
1150-0147	Diamond plate lid for driver, center, and officer hosetrays. 5.25" high with dual chrome grab hands, SS butterfly latches and gas shocks.	$593
1150-0149	Nylon black cargo net on sides for bumper crosslay.	$192
1150-0150	Double crosslay on top of the front bumper gravel shield. Tray to be "U" shape, approx 20" wide x 7.5" high x 90" wide. Holds 200' of 1.75" DJ (each). Includes tri-fold diamond plate cover hinged at the front. Requires seperate side cover option and 28" e	$1,262
1150-0152	Hinged diamond plate lid for officer side bumper tray. Includes D-Ring latch and gas shock hold open.	$264
1150-0153	Bumper tray officer's side with slats located between front intake and frame extension. Tray to be approx 9" W (min) x 17" L x 14" D (13" to slats) to hold 25' of 5" LDH.	$399
1150-0154	Bumper tray center of bumper with slats located to rear of Q2B. Tray to be approx 34"W x 9"L x 10" deep (9" to slats).	$580
1150-0158	Bumper tray center of bumper without slats 12 inches deep.	$272
1155-0002	Winch electric front mounted Ramsey 12,000lb	$3,592
1155-0003	Winch Warn Series 8 - 8,000lb with 125' 3/8" plated cable.	$3,084
1155-0005	Winch Warn Series 12 - 12,000lb with 125' 3/8" plated cable.	$4,516
1160-0000	Bumper 10" stainless steel	$1,123
1160-0001	Bumper 12" high swept back stainless steel	$1,271
1160-0002	Bumper rein backing. For use with 10" SS or heavy duty bumpers only.	$397
1160-0008	3/16" Front Bumper Gravel Shield.	$400

1160-0012	12" Front Bumper Gravel Shield Extension.	$125
1160-0013	16" Front Bumper Gravel Shield Extension.	$241
1160-0014	20" Front Bumper Gravel Shield Extension.	$428
1160-0015	24" Front Bumper Gravel Shield Extension	$569
1160-0016	28" Front Bumper Gravel Shield Extension.	$688
1160-0020	License plate holder mounted center of front bumper.	$34
1160-0021	Number plate, removable size to fit between air horns on front bumper. Spaced out from face of bumper so plate can be removed.	$153
1160-0030	Steel tow bar located below front bumper mounted to chassis extensions for towing purposes only, painted black	$1,619
1160-0031	Notch front bumper for low "S" type front intake. Includes tray below pipe extending from cab to bumper.	$953
1160-0034	8" Front Bumper Extension.	$125
1160-0041	Heavy duty front bumper 10" high with full wrap around. To be painted job color.	$1,969
1160-0042	Heavy duty front bumper with full wrap around. To be painted 767681 EG black.	$1,969
1160-0049	License plate holder mounted officer side of front bumper.	$34
1160-0050	12" heavy duty front bumper with full wrap around. To be painted L0318EG metallic silver.	$1,969
1160-0051	3/16" Front Bumper Gravel Shield. Smooth plate painted with black Durabak.	$1,181
1160-0052	Recessed winch receiver in front bumper for model QM5000 portable winch. Includes swing down front center section of bumper for winch access, bumper reinforcement, winch enclosure, raised lid, and port winch wiring. For use on E-ONE chassis with 10" high	$4,274
1160-0053	14" Front Bumper Gravel Shield Extension.	$183
1160-0054	Overlay front heavy duty bumper with diamond plate panels.	$334
1160-0055	Guard straps for bumper mtd recessed Q2B - polished stainless steel.	$267
1160-0060	Dock bumpers (4) on front bumper equally spaced (as applicable).	$265
1160-0061	10" heavy duty front bumper with full wrap around. To be painted L0318EG metallic silver.	$1,969
1160-0064	Heavy duty front bumper 10" high with full wrap around. To be painted [#COL].	$1,969
1160-0065	Heavy duty front bumper 10" high with full wrap around. Center of bumper to have a 5" deep notch for recessed Q2B. Bumper to be painted job color.	$2,444
1200-0018	"T" handle transmission selector	$1,343
1200-0020	Trans Synd synthetic transmission fluid for EVS 3000.	$167
1200-0021	Trans Synd synthetic transmission fluid for EVS 4000.	$263
1200-0059	Eng/Trans Cummins ISM 450HP/EVS4000 2007 EPA Compliant Engine	$92,810
1200-0060	Eng/Trans Cummins ISM 500HP/EVS4000 2007 EPA Compliant Engine	$94,108
1200-0062	The engine oil and transmission dip sticks to have tags. Tags to be attached to each by cable. Use colored tag to match dip stick color.	$133
1200-0063	The engine oil dipstick to have yellow handle and the transmission dipstick to have a red handle.	$189
1200-0116	Eng/Trans Cummins ISL 450HP/EVS3000 2010 EPA compliant engine.	$82,765
1200-0125	Eng/Trans Cummins ISL 380HP/EVS3000 2010 EPA compliant engine.	$81,034
1200-0083	Transmission re-programming. "D" allows trans to shift from 1st - 4th gear and "Mode" allows 5th gear.	$594
1200-0115	Polyurethane engine mounts. Cummins engines only.	$95
1225-0005	Exhaust heat shield. Locate below compartment floor.	$162
1225-0006	Exhaust tip stainless steel for Plymovent. For exhaust extraction system.	$307
1225-0008	Wrap exhaust with heat tape from the turbo down to the flex pipe. Visually inspect after install for tears in material. Wrap outside with wire mesh to keep material from coming off.	$733
1225-0009	Anchor plate for Nederman exhaust system. For use with standard nozzle. Ship Loose.	$227
1225-0012	Ward No Smoke Exhaust System.	$15,317
1225-0013	Tailpipe support. Locate between tailpipe and body approx 10" in from edge of body.	$464
1225-0014	Exhaust driver side custom chassis.	$541
1250-0003	Frame 10.25 x 3.5 x .375 chassis.	$4,881
1250-0004	Frame - Torque box for HP95 Mid-Mount aerial.	$18,328
1250-0009	Frame - Torque box for Tiller.	$63,599
1250-0014	Frame - Torque box for HP100 platform.	$24,516
1250-0025	Frame 12 x 3.5 x .375 chassis.	$4,881
1250-0026	Frame liner 11.125 X 3.125 X .375.	$2,990
1350-0001	Fuel fill package dual. Additional fuel fill provided on officer side of unit.	$447
1350-0002	Recessed fuel fill	$113
1350-0003	Fuel system 50 gallon	$1,334
1350-0005	Fuel system 65 gallons	$1,410
1350-0008	Fuel water seperator Fuel Pro 382	$610
1350-0009	Fuel line hose braided	$258
1350-0010	Fuel pick up for generator/pump. Includes hoses run to generator compartment.	$119
1350-0011	Fuel pump electric w/reprime	$369
1350-0012	Fuel shutoff valve. Location: [#LOC]	$93
1350-0013	Fuel water Racor separator to be a bottom drop out style. Shall include indicator light and audible alarm.	$643
1350-0014	Thermal control in line fuel heater	$299
1350-0023	Fuel Cooler. To be routed from the discharge side of the pump to the chassis fuel line. Cooler to be functioning when the pump is in operation.	$409
1350-0026	Fuel Lines Wrapped in Thermal Loom	$767
1350-0037	Fuel system w/65 gallon stainless steel tank.	$2,477
1400-0000	Battery two 8D 1450CCA	$1,080
1400-0002	Battery four group 31 1000CCA	$884
1400-0003	Battery six group 31 1000CCA	$1,321
1400-0010	Battery six Delco 1150 Hi-Cycle 700CCA.	$1,164
1400-0011	Battery Splash Cover for ULC compliance	$265
1400-0019	Special battery jumper stud location. Jumper studs to be located [#LOC].	$312

1400-0023	Battery six Delco 1110 Hi-Cycle 750CCA.	$1,164
1400-0024	Jumper studs to be located below driver's side front corner of body (or pump module if equipped). Studs to face down with positive stud outboard.	$187
1400-0027	Additional set of jumper studs. Location: Opposite standard location.	$320
1400-0028	Battery six Optima model D31T 900CCA.	$3,082
1500	**Cab**	
1510-0000	Seat cavity cover	$160
1510-0035	Universal air pack bottle bracket (EA). Location: [#LOC]	$140
1510-0038	Driver seat 911 air ride.	$867
1510-0039	Driver seat to be 911 air ride with SCBA back	$1,032
1510-0040	Officer seat to be 911 air ride	$867
1510-0041	Officer seat 911 air ride SCBA.	$1,032
1510-0042	Officer seat to be 911 fixed SCBA	$842
1510-0043	Driver seat to be Bostrom air ride	$959
1510-0044	Driver seat to be Bostrom air ride with SCBA back	$1,114
1510-0045	Officer seat to be Bostrom air ride	$959
1510-0046	Officer seat to be Bostrom air ride SCBA	$1,114
1510-0047	Officer seat to be Bostrom fixed SCBA	$932
1510-0048	Driver seat to be 911 electric	$1,296
1510-0049	Driver seat to be Bostrom electric	$1,384
1510-0050	Rear facing 911 seat with SCBA driver's side	$724
1510-0051	Engine cover 911 one man bench with SCBA	$950
1510-0052	Engine cover 911 two man bench with SCBA	$1,603
1510-0053	Rear facing 911 seat with SCBA officer's side	$724
1510-0054	Rear facing Bostrom seat with SCBA driver's side	$698
1510-0055	Engine cover Bostrom one man bench with SCBA	$975
1510-0056	Engine cover Bostrom two man bench with SCBA	$1,625
1510-0057	Rear facing Bostrom seat with SCBA officer's side	$698
1510-0058	Fold down 911 seat located [#LOC]	$388
1510-0059	Fold down 911SCBA seat located [#LOC].	$859
1510-0060	Fold down Bostrom seat located [#LOC].	$388
1510-0061	Fold down Bostrom SCBA seat located [#LOC].	$807
1510-0062	Two man bench centered on rear wall with 911 SCBA backs.	$1,235
1510-0063	Two man bench centered on rear wall with Bostrom SCBA	$1,524
1510-0064	Four man bench centered on rear wall with 911 SCBA	$2,911
1510-0065	Four man bench centered on rear wall with Bostrom SCBA	$2,681
1510-0066	One man bench centered on rear wall with 911 SCBA	$1,004
1510-0067	One man bench centered on rear wall with Bostrom SCBA	$1,096
1510-0072	Tiller cab seating 911 air ride and flip down training seat.	$927
1510-0076	Bostrom SCBA seats forward facing center of rear wall (PR). Free standing mtd on seat risers.	$1,862
1510-0077	Tiller cab seating Bostrom air ride and flip down training seat.	$959
1510-0080	Officer seat to be 911 attendant.	$609
1510-0082	Zico Quic-Hold mechanical air pack bottle bracket for 5" bottle(ea). Model MWAB with adjustable footplate and pull release strap. Location: [#LOC]	$510
1510-0084	Officer seat to be Bostrom electric	$1,384
1510-0085	Custom logo embroidery (EA). Bostrom seats only. Requires set-up sales code.	$121
1510-0086	Embroidery set-up for Bostrom cab seats.	$630
1510-0087	Center rear wall seats to be mounted approximately 11" apart. Quest only.	$219
1510-0088	911 SCBA seats forward facing center of rear wall (PR). Free standing mtd on seat riser.	$1,944
1510-0090	One man bench (PR) on rear cab wall with Bostrom SCBA back. Location: driver and officer side outboard.	$1,527
1510-0091	Zico Quic-Hold mechanical air pack bottle bracket (EA). Model QLM-U-OPR with adjustable footplate and pull release. Location:[#LOC]	$617
1510-0095	Driver seat Bostrom electric with integral seat belt.	$1,541
1510-0096	Officer seat Bostrom electric with SCBA back with integral seat belt.	$1,836
1510-0097	Rear facing seat driver side Bostrom with SCBA back and integral seat belt.	$781
1510-0098	Rear facing seat officer side Bostrom with SCBA back and integral seat belt.	$781
1510-0099	Rear wall seat Bostrom flip-up with SCBA back and integral seat belt. Location: [#LOC].	$1,083
1510-0100	Padded headrest for fold down jump seat (EA). Not available with rear wall windows.	$112
1510-0101	Driver and officer outboard rear facing seats mounted at 30 degree angle. Includes upper seat belt brkt adjusted to rear of cab.	$449
1510-0104	911 SCBA seat forward facing center of rear wall. Free standing mtd on seat riser.	$973
1510-0105	One man bench (PR) on rear cab wall with Seats 911 SCBA back. Location: driver and officer side outboard.	$1,238
1510-0106	911 SCBA seats forward facing rear wall (PR). Equally spaced with individual risers on rear wall.	$1,944
1510-0116	Fold-down seat located [#LOC].	$386
1510-0117	Bostrom SecureAll mechanical air pack bottle bracket (EA). Location: [#LOC]	$491
1510-0118	Flip up 911 SCBA seat located [#LOC].	$884
1510-0119	Flip up Bostrom SCBA seat located [#LOC].	$912
1510-0120	Flip up 911 attendant seat located [#LOC].	$965
1510-0121	Flip up Bostrom attendant seat located [#LOC].	$1,074
1510-0122	Fold down seat with 911 SCBA back located [#LOC].	$861
1510-0123	Fold down seat with Bostrom SCBA back located [#LOC].	$875
1510-0124	Officer seat fixed Bostrom with SCBA back and integral seat belt.	$905
1510-0126	CrewGuard occupant seating detection system. Display location: [#LOC].	$3,193
1510-0127	Additional CrewGuard display. Location: [#LOC].	$253

1510-0128	FlameFighter air pack bottle bracket (EA). Model 17000 with adjustable footplate and push-button release. Location: [#LOC]	$495
1510-0129	Two man bench centered on rear wall with Bostrom SCBA backs for use with ALS provision with side access only. Includes (1) horizontally hinged door on the front of the rear bench seat for access to storage below bench.	$1,927
1510-0130	Flip up Bostrom ABTS attendant seat located [#LOC].	$1,002
1510-0131	Bostrom SecureAll mechanical air pack bottle bracket (EA) for bench / fold-down seat. Location: [#LOC]	$602
1510-0133	Adjust rear facing outboard seats as far inboard as appicable next to engine cover.	$108
1510-0134	Rear wall seat Bostrom air ride Sierra non SCBA. Includes single riser. N/A with outboard rear wall seats. Storage below seat N/A. Location: [#LOC].	$1,273
1510-0135	Arm rest installed on both sides of the seat. Location: [#LOC].	$463
1510-0136	Center rear wall seats to be mounted approximately 5" apart. C2X/T2X only.	$219
1510-0137	Bostrom SCBA seat forward facing center of rear wall. Free standing mtd on seat riser.	$982
1510-0138	Two man bench centered on rear wall with (1) 911 SCBA back driver and (1) bench back cushion officer.	$1,085
1510-0144	FlameFighter model 14000 air pack bottle bracket with model 39015 safety strap (EA). Location: [#LOC]	$210
1510-0146	911 AIR SCBA seats forward facing center of rear wall (PR). Free standing mtd on seat risers.	$2,794
1510-0147	911 SCBA seats forward facing rear wall (3). Equally spaced with common riser on rear wall.	$2,915
1510-0148	Rear facing 911 attendant seat driver's side.	$609
1510-0149	Rear facing 911 attendant seat officer's side.	$609
1510-0150	Two man bench centered on rear wall with (1) Bostrom SCBA back driver and (1) bench back cushion officer.	$1,374
1510-0152	Driver seat Bostrom mechanical with integral seat belt.	$1,752
1515-0000	Air conditioning aerial ISM/S60. Two roof top condensers, for use with aerials	$6,616
1515-0001	Air Conditioning premium aerial ISM/S60. Two roof top condensers, for use with aerials	$8,720
1515-0002	Air Conditioning ISC/ISL. Radiator mounted condenser	$5,660
1515-0004	Air Conditioning ISM/S60. Single roof top mounted condenser.	$5,881
1515-0005	Air Conditioning premium ISM/S60. Single roof top mounted condenser	$7,924
1515-0006	Air Conditioning filter kit	$241
1515-0007	Air conditioning for Typhoon only	$6,324
1515-0012	Paint air conditioning condensor job color.	$737
1515-0017	Air conditioning for the Typhoon X, CII X and Quest with Cummins ISC/ISL engine, radiator mounted condensor.	$6,141
1515-0018	Air conditioning for the CII X and Quest with Cummins ISM or Detroit Diesel Series 60 engine, roof top mounted condensor.	$7,172
1515-0019	Air Conditioning lines and fittings wrapped	$385
1515-0020	Well nut fasteners to attach A/C filter to overhead panel	$223
1515-0029	Air conditioning for the TyphoonX, CII X and Quest with Cummins ISC or ISL, roof top mounted condensor.	$7,172
1520-0000	Cyclone II medium cab 58" CA	$51,624
1520-0001	Cyclone II long cab 67.5" CA	$57,032
1520-0003	Typhoon long cab 68" CA	$34,690
1520-0004	Typhoon Medium cab 58" CA	$32,339
1520-0005	Cyclone II medium cab three door with rear door on officer's side.	$51,624
1520-0006	Cyclone II long cab three door with rear door on officer's side.	$57,032
1520-0007	Tillerman cab. Heat & A/C and (3) 6" (12VDC) fans ceiling mounted, (1) each rear corner & (1) front left corner. Seat material and color is the same as in the front cab.	$41,878
1520-0008	Cyclone II X medium cab with 58" CA	$49,773
1520-0010	Cyclone II X long cab with 67.5" CA	$55,182
1520-0012	Typhoon X long cab with 67.5" CA	$32,839
1520-0013	Typhoon X medium cab with 58" CA	$30,489
1520-0015	Cyclone II X medium cab with ALS provision and 80" CA. Includes exterior hinged ALS doors approx 73" high.	$57,129
1520-0017	Quest long cab with 68" CA	$55,182
1520-0018	Quest medium cab with 58" CA	$49,773
1520-0019	Cyclone II X medium cab with ALS provision, barrier style doors and 80" CA. Includes exterior hinged ALS doors approx 73" high.	$57,849
1520-0020	Quest medium cab with 58" CA and barrier style doors.	$50,493
1520-0021	Typhoon X long cab with 67.5" CA. Includes barrier style doors.	$33,560
1520-0022	Cyclone II X medium cab with 58" CA. Includes barrier style doors.	$50,493
1520-0023	Cyclone II X long cab with 67.5" CA. Includes barrier style doors.	$55,903
1520-0025	Typhoon X medium cab with 58" CA. Includes barrier style doors.	$31,219
1520-0026	Quest long cab with 68" CA and barrier style doors.	$55,903
1520-0027	Quest extended cab with 80" CA.	$55,770
1520-0028	Cyclone II X long cab with 67.5" CA. For use with a lowered aerial. Requires full length 4.5" deep trough option.	$62,437
1535-0002	Driver side cab wheel well medical cabinet approximately 42x22(25 Quest)x28. Includes external locking roll-up door and interior hinged door with locking push-button latch. Cabinet includes (2) adjustable shelves.	$1,894
1535-0003	Officer side cab wheel well medical cabinet approximately 42x22(25 Quest)x28. Includes external locking roll-up door and interior hinged door with locking push-button latch. Cabinet includes (2) adjustable shelves.	$1,894
1535-0004	Medical cabinet mounted on rear wall of cab 48X32X24 with a locking roll up door. Lower door opening raised to provide hand clearance.	$3,927
1535-0005	Medical cabinet mounted on rear wall of cab 48X40X20 with locking roll up door. Lower door opening raised to provide hand clearance.	$3,692
1535-0006	Medical cabinet mounted on rear wall of cab 55X32X19 with a locking roll up door. Lower door opening raised to provide hand clearance.	$2,517
1535-0007	Medical cabinet mounted on rear wall of cab 55X40X20 with a locking roll up door. Lower door opening raised to provide hand clearance.	$3,139
1535-0012	Medical cabinet mounted on the wheel well driver side of cab 45X24X21 with a locking roll up door.	$2,355
1535-0013	Medical cabinet mounted on the wheel well officer side of cab 45X24X21 with a locking roll up door.	$2,355

1535-0028	Cab medical storage cabinet(s) finish to be swirled with clear coating.	$1,120
1535-0035	Engine Compartment Light LED (EA).	$220
1535-0037	Rear cab wall medical cabinet with side access doors (one each side). Cabinet to be 50" high x 38" wide x 24" deep. Includes (2) locking roll-up doors (satin finish) and (3) adjustable shelves. Lower door openings raised to provide hand clearance.	$2,860
1535-0038	Interior medical cabinet. Locate to rear of engine cover. Cabinet to be 30" high x 38" wide x 20" deep with a locking roll up door. Includes (1) adjustable shelf.	$2,931
1535-0043	Medical cabinet mounted on rear wall of cab 48X32X24 with a locking roll up door and windows in door slats. Lower door opening raised to provide hand clearance.	$4,205
1535-0045	ALS interior - Style "A". Includes forward wall with center locking roll-up door for access from int, small compts up high ea side of ctr opening with glove box latch on driver's side compt and Medco keyed lock on officer's side, strikers high and low o	$8,196
1535-0046	Medical cabinet mounted on rear wall of cab 60X40X23 with a locking roll up door. Lower door opening raised 12" to provide area for rear heaters. Includes lower ventilation, front access and removable sub-floor for additional access.	$2,980
1535-0047	Medical cabinet mounted on the officer side rear cab wall 55X18X12 with a locking roll up door. Lower door opening raised to provide hand clearance.	$2,374
1535-0048	Medical cabinet mounted on the driver side rear cab wall 55X18X12 with a locking roll up door. Lower door opening raised to provide hand clearance.	$2,374
1535-0049	Louvers for interior medical cabinet wall(s) to help cabinet contents to maintain cab interior temperatures. The louvers to be in four sets of three, located two high and two low. Location: [#LOC]	$162
1535-0052	Medical cabinet mounted on rear wall of cab 52X40X23 with a locking roll up door. Lower door opening raised 4" to provide area for radio installation. Includes lower ventilation and removable sub-floor for additional access.	$2,980
1535-0054	Exterior access roll up doors for medical cabinets to be painted upper cab color.	$233
1535-0057	Driver side cab wheel well medical cabinet approximately 42x22(25 Quest)x28. Includes external locking pan door painted job color and interior full height hinged door with locking push-button latch. Cabinet includes (2) adjustable shelves.	$2,272
1535-0058	Medical cabinet mounted on rear wall of cab 48X42X20 with angled corners and locking roll up door. Lower door opening raised to provide hand clearance.	$3,692
1535-0059	Brace .75 x 2.75 below medical cabinet shelf	$79
1535-0060	Rear cab wall medical cabinet with side access doors (one each side). Cabinet to be 62" high x 38" wide x 24" deep. Includes (2) locking roll-up doors (satin finish) and (3) adjustable shelves. Lower door openings raised to provide hand clearance.	$3,081
1535-0061	Driver side cab wheel well medical cabinet approximately 42x22(25 Quest)x28. Includes external locking pan door painted job color and interior locking roll-up door with satin finish. Cabinet includes (2) adjustable shelves.	$2,493
1535-0062	Interior medical cabinet. Locate to rear of engine cover. Cabinet to be 30" high x 38" wide x 20" deep with a locking roll up door. Includes (1) adjustable shelf and forward facing drop down door.	$3,016
1535-0063	Officer side cab wheel well medical cabinet approximately 42x22(25 Quest)x28. Includes external locking single door painted job color and interior hinged door with locking push-button latch. Cabinet includes (2) adjustable shelves.	$2,272
1535-0064	Rear cab wall medical cabinet with side access doors (one each side). Cabinet to be 48" high x 38" wide x 24" deep. Includes (2) locking roll-up doors (satin finish) and (3) adjustable shelves. Lower door openings raised to provide hand clearance.	$2,860
1535-0066	Interior medical cabinet. Locate to lower rear of engine cover. Cabinet to be 32" high x 30" wide x 24" deep with single pan double bi-fold doors. Includes (1) vertical and (1) horizontal partition centered in the cabinet, louvered lower side walls and r	$2,959
1535-0067	ALS - Side access. Includes compts on each side of cab, access up high each side of interior outboard with glove box latches, strikers high and low on ALS doors, access plts on int panel of ALS doors, extended cab floor and three adj shelves.	$3,268
1535-0068	Rear wall medical cabinets. Includes forward wall and (2) full height, equal width locking roll-up door compts with (3) shelves in each compt.	$8,960
1535-0069	Rear cab wall medical cabinet with side access doors (one each side). Cabinet to be 50" high x 30" wide x 24" deep. Includes (2) locking roll-up doors (satin finish) and (3) adjustable shelves. Lower door openings raised to provide hand clearance.	$2,860
1535-0070	Riser for medical cabinet. Lifts bottom of cabinet up to top of rear wall seat support. Front of riser to be closed, sides to be open. CII X / Typhoon X only.	$655
1535-0071	ALS interior - Style "A". Includes forward wall with center locking roll-up door for access from int, small compts up high ea side of ctr opening with glove box latch on driver's side compt and Medco keyed lock on officer's side, strikers high and low o	$17,768
1535-0072	Rear cab wall medical cabinet with side diamond plate access doors (one each side) mounted above support channel on back wall. Cabinet to be 38" high x 47.25" wide x 14" deep. Includes diamond plate doors hinged to the rear with d-ring latches and (2) adj	$2,860
1535-0073	Officer side cab wheel well medical cabinet approximately 42x22(25 Quest)x28. Includes external locking pan door painted job color and interior hinged full height door with locking push-button latch. Cabinet includes (2) adjustable shelves.	$2,272
1535-0074	All medical cabinet RUD in the cab to be locking with CH751 key.	$126
1535-0075	Driver side cab wheel well medical cabinet approximately 42x22(25 Quest)x28. Includes external locking roll-up door and interior hinged door with locking push-button latch. Cabinet includes (1) adjustable partition installed and (2) adjustable shelves shi	$2,000
1535-0076	Driver side cab wheel well medical cabinet approximately 42x22(25 Quest)x28. Includes external pan door with locking Tri-Mark latch painted job color and interior full height hinged door with locking push-button latch. Cabinet includes (2) adjustable shel	$2,417

1535-0077	Officer side cab wheel well medical cabinet approximately 42x22(25 Quest)x28. Includes external pan door with locking Tri-Mark latch painted job color and interior full height hinged door with locking push-button latch. Cabinet includes (2) adjustable she	$2,417
1535-0078	Interior medical cabinet. Locate to rear of engine cover. Cabinet to be 25.5" high x 30" wide x 23" deep with (2) drop down doors.	$976
1535-0079	All roll-up medical cabinet doors selected on the cab to be Amdor brand.	$121
1535-0080	Officer side cab wheel well medical cabinet approximately 42x22(25 Quest)x28. Includes external locking roll-up door. Cabinet includes (2) adjustable shelves.	$1,694
1535-0081	Driver side cab wheel well medical cabinet approximately 42x22(25 Quest)x28. Includes external locking roll-up door. Cabinet includes (2) adjustable shelves.	$1,694
1535-0082	11"H x 18"W access opening with cargo net cover on driver and officer side wheel well medical cabinets back wall(engine cover side)up high. Includes deflector plate on ceiling to protect roll-up door.	$731
1535-0085	Rear cab wall medical cabinet with side access doors (one each side). Cabinet to be 36" high x 38" wide x 24" deep. Includes (2) roll-up doors (satin finish) and (2) adjustable shelves. Lower door openings raised to provide hand clearance.	$2,860
1535-0086	Driver and officer side cab wheel well medical cabinet approximately 17x23x28. Includes internal locking vertically hinged door. Quest cabs only.	$1,273
1535-0088	Riser for medical cabinet. Approx 40"W x 20"D x 17"H. Front of riser to have a drop down door with two locking latches. Finish to match medical cabinet.	$854
1535-0090	Medical cabinet mounted on rear wall of cab 48X40X23 with a locking roll up door. Lower door opening raised 4" to provide area for radio installation. Includes lower ventilation and removable sub-floor for additional access.	$2,980
1535-0091	Officer side cab wheel well medical/communication cabinet approximately 42x22(25 Quest)x28. Includes external half height locking pan door with Tri-Mark latch painted job color and interior full height opening with cargo netting. Cabinet includes (3) adju	$2,988
1535-0092	Driver side cab wheel well medical/communication cabinet approximately 42x22(25 Quest)x28. Includes external half height locking pan door with Tri-Mark latch painted job color and interior full height opening with cargo netting. Cabinet includes (3) adjus	$2,988
1535-0094	Driver side cab wheel well medical cabinet approximately 42x22(25 Quest)x28. Includes external pan door with locking Tri-Mark latch painted job color and interior full height opening with cargo net cover. Cabinet includes (2) adjustable shelves.	$2,567
1535-0095	Officer side cab wheel well medical cabinet approximately 42x22(25 Quest)x28. Includes external pan door with locking Tri-Mark latch painted job color and interior full height opening with cargo net cover. Cabinet includes (2) adjustable shelves.	$2,567
1535-0096	Exterior access roll up door for medical cabinet to be painted two-tone to match cab paint break (EA).	$399
1535-0100	Medical cabinet mounted on the driver side rear cab wall 55X28X12 with a locking roll up door. Lower door opening raised to provide hand clearance.	$2,684
1535-0101	Medical cabinet mounted on the officer side rear cab wall 55X28X12 with a locking roll up door. Lower door opening raised to provide hand clearance.	$2,684
1540-0001	Map box dual storage	$514
1540-0003	For Typhoon chassis only	$472
1540-0004	Map Box Rectangular Short.	$457
1540-0005	Map Box Rectangular Tall	$483
1540-0006	Map box suspended with drop down doors.	$531
1540-0007	Map Box with Angle Storage. Angled side to face officer.	$457
1540-0008	Map box suspended with officer's map storage.	$641
1540-0014	All map boxes in the cab to be swirled with clear coat	$531
1540-0015	Map Box Suspended with Drop Down Door. Box offset to rear to allow engine access door to open further.	$531
1540-0016	Map box suspended with officer front drop down door with (4) slots and driver rear drop down door with (4) slots.	$630
1540-0017	Map box with angled top on rear engine cover	$524
1540-0020	Map box with 3 compartments on rear of engine cover. Forward compartment has angle lift-up door with gas shocks. Rear of box has top and rear compartments with hinged doors.	$1,074
1540-0021	Map box suspended 34" wide with (3) drop down doors.	$630
1540-0022	Map / medical box on rear of engine cover. Officer's side front has map box w/drop down door. Rear has two compts w/vert hinged doors. Left side includes one adj shelf.	$1,950
1540-0023	Map box suspended rear facing with drop down door. Box offset to rear to allow engine access door to open further.	$531
1540-0024	Map / medical box on rear of engine cover. Front has 2 map boxes w/3 horz slots ea and drop down doors. Rear has 2 compts w/vert hinged doors.	$2,172
1540-0025	Map box suspended with officer's map storage.	$641
1540-0026	Locking map box door. Map box door to include a locking push-button latch. Key type to be CH751.	$73
1540-0027	Map box suspended with officer front drop down door with (4) slots and driver rear drop down door with (2) slots.	$630
1540-0028	Map box suspended with full width lower storage and officer's map storage.	$641
1540-0031	Map Box Suspended with Drop Down Door 17H x 34W x 14D. Box offset to rear to allow engine access door to open further.	$642
1540-0032	Map box suspended with driver's map storage.	$641
1540-0034	Map box suspended 37" wide with (3) drop down doors.	$630
1540-0035	Rear engine cover rectangular map box 12H X 13.75W X 31L. Includes (3) slots driver, open center, (2) slots officer side and cargo net cover.	$885
1540-0037	Map box suspended with drop down doors. 15H x 37.5W x 14D	$531
1540-0039	Map box / rear engine cover medical cabinet. Includes forward facing map box with 2 drop down doors and incorporated rear engine cover medical cabinet with roll-up door.	$4,095
1540-0040	Map box suspended with drop down doors. 34"W x 10"H x 12"D	$531

1540-0042	Map box suspended with driver and officer front drop down door and officer rear drop down door. Includes (4) slots on officer side and map storage on driver side.	$736
1540-0045	Map box rectangular with rear hinged door. 11"L (front to rear) x 20"W (side to side) x 6"D.	$457
1540-0047	Map box with 3 compartments on rear of engine cover. 2 compartments on top will be hinged back to back. Forward compartment has lift-up door with gas shocks. Rear of box has top and rear compartments with hinged doors. Lower compartment will be approx 7"	$1,074
1540-0048	Rear engine cover storage box with cargo net cover. 44"W x 24"H x 14"D with rear facing opening.	$986
1540-0049	Map box suspended with drop down doors. Driver door approx. 15.5"W, officer door approx. 19.5"W. 35"W x 11"H x 13.5"D. (1) vertical partition 4" off officer side, (1) shelf offset to driver side of partition.	$531
1540-0050	Storage box with hinged top and push-button latch. Box to be mounted on rear of engine cover (hinge to forward edge), angled same as upper engine cover. Size: 15"H x 35"W x 7"D. Quest cabs only.	$408
1540-0051	Map box suspended with drop down doors. 34"W x 9.50"H x 12"D.	$531
1540-0056	Rear engine cover rectangular map box angled to match upper and lower vertical engine cover. 11"H X 12"W (front to rear) X 42.5"L. Includes (6) storage slots approx. 14"L x 6"W with (3) retaining straps front to rear, (1) over each area.	$885
1540-0057	Map box suspended with driver and officer front and rear drop down doors. Includes (4) slots on each side.	$736
1550-0001	Map pockets cab front doors diamond plate	$172
1550-0002	Map pockets cab front doors stainless steel	$141
1550-0007	All cab exterior access doors to have CH751 keyed locks.	$169
1550-0008	Fixed rear cab wall windows (pr). Not available with side mount pump module applications.	$111
1550-0009	Fixed rear cab wall narrow windows (pr).	$108
1550-0010	Sliding rear cab wall windows (pr). Windows are drop style and not available with side mount pump module applications.	$248
1550-0011	Rear crew cab door windows. Includes manual roll-down actuation. Not available with paddle style door latching.	$1,020
1550-0013	Driver and Officer door windows. Includes electric roll-down actuation. Each door to be individually controlled and the driver side is to have control for all electrically actuated windows.	$1,414
1550-0014	Rear crew cab door windows. Includes electric roll-down actuation. Each door to be individually controlled. Not available with paddle style door latching.	$1,414
1550-0015	Stainless steel protective trim on rear edge of cab door openings. E-One custom chassis only.	$214
1550-0017	Door panels cab stainless steel	$1,261
1550-0018	Scuff plates stainless steel (Set). Not available with paddle latches.	$99
1550-0019	Windows cab side sliding driver side	$253
1550-0022	Cab roof vent with fan (pair). Each vent switched next to vent.	$771
1550-0023	Windows rear sliding vista. Requires raised roof option	$418
1550-0024	All cab doors shall have paddle latches. Not available on rear doors with roll down windows.	$588
1550-0029	Map pockets cab rear doors diamond plate	$148
1550-0030	Map pockets cab rear doors stainless steel	$179
1550-0037	(4) Incandescent cab step area lighting. Locate each light in [#LOC]. Lights to be switched with door ajar.	$148
1550-0038	(4) LED cab step area lighting. Locate each light in [#LOC]. Lights to be switched with door ajar.	$584
1550-0039	Door mounted red incandescent flashing lights (4). Locate lights [#LOC]. Lights to be switched with door ajar.	$148
1550-0040	Door mounted red LED flashing lights (4). Locate lights [#LOC]. Lights to be switched with door ajar.	$350
1550-0041	Door mounted amber incandescent flashing lights (4). Locate lights [#LOC]. Lights to be switched with door ajar.	$148
1550-0042	Door mounted amber LED flashing lights. Locate lights [#LOC]. Lights to be switched with door ajar.	$350
1550-0046	Canadian flag reflective material in place of striping for lower interior cab doors.	$85
1550-0047	All (4) cab doors to have double strap. Straps to be sewn together.	$140
1550-0050	All cab exterior cab locks to be keyed for #CH751 locks. Orange County.	$251
1550-0053	Aluminum interior rear cab door handrails (PR) IPOS.	$313
1550-0054	All cab exterior access doors to have 1250 keyed locks.	$545
1550-0055	Door mounted Whelen red TIR6 LED flashing lights (4) w/clear lenses. Locate lights [#LOC]. Lights to be switched with door ajar.	$1,175
1550-0056	Cab door insert (ea) - Carbon fiber style. Quest cab only.	$218
1550-0057	Cab door insert (ea) - Stainless steel. Quest cab only.	$320
1550-0061	Rear crew cab door window. Includes electric roll-down actuation. Not available with paddle style door latching. For use with 3 door cab only.	$708
1550-0063	(3) LED cab step area lighting. Locate each light in [#LOC]. Lights to be switched with door ajar.	$439
1550-0066	Cab door kickplates fastened with screws.	$223
1550-0067	[#COL] chevron "V" stripe on lower cab door panel approx 18" high. Stainless steel door panels only. CIIX and TyphoonX only.	$277
1550-0069	Reflective [#COL] 3M Diamond Grade striping positioned in the "A" formation located in the lower cab door panels.	$281
1550-0071	ABS cab door panels and lower kick panels to be fastened with screws. No drive rivets.	$372
1550-0072	Door panels cab alum painted Zolatone gray.	$1,261
1550-0073	[#COL] chevron "A" stripe on lower cab door panel approx 18" high. Stainless steel door panels only. CIIX and TyphoonX only.	$277
1550-0074	[#COL] chevron "A" stripe on entire lower cab door kick plate. Stainless steel or smooth plate kick plates only. CIIX and TyphoonX only.	$277
1550-0075	Door mounted red LED flashing lights (3). Locate lights [#LOC]. Lights to be switched with door ajar.	$263
1550-0077	Interior cab door locks - manual. Will be individually actuated from each respective door.	$379
1550-0078	Map pockets 14 gauge stainless steel. Includes vinyl trim around top of opening and nylon strap with snap to retain contents. Location: front cab doors.	$381
1550-0080	[#COL] chevron "A" stripe on lower cab door panel approx 12" high. Stainless steel door panels only. CIIX and TyphoonX only.	$277

1550-0081	Cab door locks - electric. Includes driver side exterior touchpad, (2) remote key fobs, barrel style key lock on exterior of each door and manual interior lock on each door.	$1,121
1615-0001	Vista full height rear doors 12"	$3,368
1615-0002	Vista full height rear doors 16"	$3,526
1615-0003	Vista full height rear doors 20"	$3,685
1615-0015	Diamond plate overlay front of vista slope.	$443
1615-0016	Cab roof to have a 4.5" deep x 44" wide trough for lowered aerial.	$528
1620-0000	Overlay the painted grille with stainless steel	$315
1620-0002	Stainless steel grille for Typhoon X	$835
1620-0003	Stainless steel grille for Typhoon	$835
1640-0000	Step below cab door. Located [#LOC]. Steps under Front Cab doors shall not interfere with Approach Angle.	$213
1670-0001	Ramco 6001FFR mirrors. Remote controlled with top CAS750 convex. Location:[#LOC]	$1,433
1670-0002	Ramco 6001MCR mirrors. Remote controlled with bottom convex. Location: [#LOC]	$1,138
1670-0003	Velvac #2010 mirrors. Door mounted with remote control and heat.	$610
1670-0007	3" Extension for Ramco Mirrors	$148
1670-0008	4.5" Extension for Ramco Mirrors	$148
1670-0010	Pair of Retrac West Coast mirrors mounted on cab doors.	$279
1670-0011	Cab mirrors for tiller cab. Includes one inside at front center overhead and one each side exterior mounted.	$270
1670-0013	Both cab mirrors to be heated.	$277
1670-0015	Velvac #2010 mirrors with marker light. Remote controlled and heated.	$643
1670-0017	Mirror Stainless Steel 8" Convex officer side cab brow, Bell Type Mounting, 2 Piece Adjustable Telescoping Arm. Head #983, Arm #3983	$82
1670-0019	Ramco 6001CCR-750 mirrors. Remote controlled with bottom convex and top CAS750 convex. Location: [#LOC]	$1,526
1670-0020	Rosco mirrors w/marker lights and LED turn signals, remote, heated and convex pair.	$1,054
1670-0021	Ramco 6001FFR mirrors. Remote controlled with CAS750R top remote convex. Location: [#LOC]	$1,655
1670-0023	Mirror Stainless Steel 8" Convex driver side cab brow, Bell Type Mounting, 2 Piece Adjustable Telescoping Arm. Head #983, Arm #3983	$82
1670-0028	Rosco AccuStyle 818 door mounted mirrors. Chrome w/LED turn signals, remote, heated and convex (PR).	$1,054
1670-0030	Kenworth model MX148S wide angle mirror. Location: [#LOC].	$166
1670-0031	2" Extension for Ramco Mirrors	$148
1670-0032	Ramco 6001FFR mirrors. Remote controlled with top CAS750 convex and LED turn signals. Location: [#LOC].	$1,913
1670-0035	Ramco 6001FFR mirrors with INVUE camera. Remote controlled with top CAS750 convex. Location: [#LOC].	$2,529
1670-0036	Ramco 6001MCR mirrors with INVUE camera. Remote controlled with bottom convex. Location: [#LOC]	$2,529
1670-0038	Lang Mekra mirrors w/LED marker lights and turn signals, remote, heated and convex pair.	$1,237
1675-0001	Stainless steel trim belt on front of cab. Location:[#LOC].	$441
1675-0005	Cab roof vent with-out fan (pair).	$344
1675-0014	SCBA bottle storage two driver side of cab behind rear door with cast door.	$680
1675-0015	Cab roof mounted diamond plate 3 sided light tower shield with 45 degree front slope.	$875
1675-0016	Cab roof mounted painted job color 3 sided light tower shield with 45 degree front slope.	$1,090
1675-0020	Auto eject stainless steel scuff plate.	$85
1675-0025	SCBA bottle storage two officer side of cab behind rear door with cast door.	$680
1675-0030	Mud flaps, front, black with E-ONE logo.	$143
1675-0033	Chrome Fire Bell with Eagle. Location: Officer's side of front bumper extension.	$1,280
1675-0034	Cab driprail drain holes. The driprail just before the vista roof begins to have a drain hole provided (one each side of cab).	$78
1675-0035	Belt size tag. Install next to fluid capacity tag. Tag to provide belt sizes for all belts provided.	$95
1675-0036	Cab wheel well liners. The cab wheel well liners to be aluminum IPO ABS plastic. Paint job color.	$552
1675-0038	Sign plate smooth 30"x30" mounted on cab roof. Color: [#COL]	$219
1675-0039	Pair of 48" handrails located just behind driver and officer rear door (ALS doors if equipped) one each side.	$427
1675-0041	Stainless steel trim belt on low on sides of cab.	$1,308
1675-0042	Rear cab wall to be smooth 3/16" aluminum plate. Cab wall to be finish painted to match the cab paint scheme.	$321
1675-0045	Hansen white LED cab handrails upgrade (EA).	$179
1675-0048	Rear cab wall to be smooth 3/16" aluminum plate with a diamond plate overlay.	$401
1675-0053	Stainless steel scuff plates full height on rear cab corners (PR)	$221
1675-0054	Sign plate smooth 18"x28" mounted one each side rear cab roof. Color: [#COL]	$436
1675-0055	Radio box 18W x 12H x 10D. Location: Centered up high of vista area recessed on the rear exterior cab wall with door hinged to the bottom.	$462
1675-0056	Stainless steel scuff plates on rear cab roof corners (PR)	$166
1675-0057	Mounting plate for battery charger receptacle and indicator - removable brushed stainless steel.	$261
1675-0058	Chrome fire bell with gold eagle. Location: Officer's side of front bumper extension.	$1,348
1675-0059	Rear cab wall to be smooth 3/16" aluminum plate with swirl plate overlay.	$661
1675-0060	Sign plate smooth 40" x 80" mounted on cab roof. Color: [#COL]	$632
1675-0061	Cab roof mounted 4 sided light tower shield painted job color.	$1,417
1675-0062	Electric chrome fire bell with eagle. Location: Driver's side of front bumper extension. Includes switch on officer side overhead console.	$1,791
1675-0066	Skid plate under each lower step. Quest cab only.	$396
1675-0067	Cab roof mounted 3 sided light tower shield painted two-tone job color.	$1,090
1675-0071	Remove side grille from wheel well areas of the cab. TyphoonX cab only.	$216
1675-0072	(4) roof mounted (welded) sign plate mounting points. Mounts to space roof sign plate off cab roof and allow for easy removal.	$254
1675-0073	Hose deflector pin to protect Q2B on front bumper extension.	$190
1675-0074	Cab roof mounted 3 sided light tower shield with welded sides and painted job color with 45 degree front slope.	$1,289

1675-0075	Cab roof mounted painted job color 3 sided light tower shield with 90 degree front slope.	$1,090
1675-0076	Cab roof mounted diamond plate 3 sided light tower shield with 90 degree front slope.	$875
1675-0077	Storage box on rear cab roof 48W x 48L x 12H with 4-sided lid painted two-tone job color (if applicable)	$1,781
1675-0078	Hansen red LED cab handrails upgrade (EA).	$179
1675-0079	Diamond plate storage box for Little Giant model 17 on rear cab vista roof. Includes drop down door with push button latches and nylatron on floor.	$1,302
1675-0082	Stainless steel scuff plates full height on Quest rear cab corners (PR).	$402
1675-0085	Under riser half depth roll-out trays. Includes cab floor extensions. Requires riser height exterior compartments.	$1,156
1675-0086	Raised cab wheel wells for low OAH applications.	$400
1675-0087	Pair of handrails (8" driver and 18" officer) located just behind driver and officer front door.	$442
1675-0088	Fluid capacity tag to include filter model numbers for engine oil, transmission, fuel, air, hydraulic and coolant. Tire size front and rear to be included on tag.	$95
1675-0089	Radio box 18W x 12H x 10D. Location: Up high center rear wall panel offset to driver side of vista area recessed on the rear exterior cab wall with door hinged to the bottom.	$462
1675-0093	Grill on side of cab over wheel (PR). Grills are non-venting and for cosmetic purposes only. Includes black-out surface behind grills.	$224
1680-0000	Air intake emergency shutdown. Dash mounted guarded switch	$1,495
1680-0001	Block heater 1000 watt	$470
1680-0002	Block heater 1500 watt. Available on ISM and S60 only	$481
1680-0005	Thermatic Fan Clutch	$1,679
1680-0006	Drivelines 1710	$973
1680-0007	Drivelines 1810. Required on 1550 lb/ft torque engines	$1,526
1680-0008	Tow eyes front painted below bumper / cab (PR).	$244
1680-0009	Tow eyes front stainless steel below bumper / cab (PR).	$615
1680-0010	Tow eyes front stainless steel mounted in up position. Requires 16" minimum bumper extension on custom chassis and 18" minimum bumper extension on commercial chassis.	$615
1680-0011	Tow eyes rear below body painted	$564
1680-0012	Tow eyes rear frame painted	$501
1680-0013	Tow hooks front stainless steel in down position. Requires extended bumper on commercial chassis. If Non-Extended bumper on Com Chassis, tow hooks are to be ordered with chassis.	$737
1680-0014	Tow hooks front stainless steel mounted up. Requires 12" minimum bumper extension on custom and commercial chassis.	$737
1680-0016	Exhaust end chrome plated. Due to high heat from 2007 emission exhaust systems, dis-coloring of exhaust end may occur after prolonged use.	$239
1680-0017	Hotshift PTO	$1,816
1680-0021	Exhaust end for Plymovent. For exhaust extraction system.	$249
1680-0022	Auto lube system Vogel. Chassis points only.	$3,881
1680-0042	Tow hooks front painted in the down position.	$253
1680-0051	Aerial hydraulic activation system.	$1,172
1680-0053	Storage below rear bench seat. (1) hinged door on each side of the bench seat.	$561
1680-0056	Cold Weather Pkg for Cab. Includes (2) 8" fans, fan clutch and additional insulation on the front wall.	$3,106
1680-0066	Vogel auto lube system for all chassis points (26) and jack system points (12).	$5,240
1680-0079	Pressure Sensing Governor DDEC Engine - Required with Fire Commander	$1,246
1680-0080	Tow eyes front painted in up and down position. Tow eyes to use same holes for both sets.	$488
1680-0081	Special cover kit for Memphis to include auto lube Vogel driver's side front frame and cannon plug cover	$389
1680-0082	The air intake emergency cable reset. Officer side of cab below the front bumper. Locate so cable is not visible or can be pulled without reaching under the bumper.	$196
1680-0087	Radiator brush guard below cab.	$549
1680-0091	Tow eyes front stainless in up position and painted in down position. Tow eyes to use same holes for both sets.	$857
1680-0092	Tow blocks under front bumper extension.	$296
1680-0093	Tow eyes front stainless steel with 3" holes mounted in up position. Requires 16 inminimum bumper extension on custom chassis and 18 in minimum bumper extension on commercial chassis.	$831
1680-0099	Block heater 1500 watt wired through inlet receptacle. Available on ISM and S60 only	$481
1680-0116	Oil pan heater. Fleetguard 22MM 150W/120V wired to shoreline.	$447
1680-0118	Cold Weather Pkg for Cab. Includes fan clutch and additional insulation on the front wall.	$2,767
1680-0121	Under the body there shall be equipped with a pair of receiver assemblies, each with a removable swivel hoist ring, or can be used with a Class III winch. One each side of apparatus. The receivers shall be locate in front of rear axle. Final location will	$3,161
1680-0124	Boom support modification - Tiller. Support to accommodate a 50" wide ladder tunnel.	$422
1680-0126	Block heater 1000 watt wired through inlet receptacle.	$470
1680-0127	Block heater thermostat.	$243
1680-0131	Tow eyes rear frame stainless steel.	$1,186
1680-0134	Fuel tank steel skid plate. For use with 50/65 gal tanks. Includes front corner, bottom and rear corner of tank.	$1,087
1680-0137	Diesel Exhaust Fluid (DEF) 10 gallon tank. Location: [#LOC].	$1,444
1680-0145	Diesel Exhaust Fluid (DEF) 5 gallon tank. Location: [#LOC].	$1,370
1680-0154	Oil pan heater. Fleetguard 22MM 150W/120V wired to block heater receptacle.	$447
1685-0001	Cab interior black. Does not include seat color.	$2,683
1685-0002	Cab interior burgundy. Does not include engine cover or seat color.	$2,683
1685-0003	Fold down computer tray bolted to engine cover on officer's side.	$693
1685-0004	Storage below rear bench seat for four SCBA bottles	$630
1685-0008	Control lanyard Y type for air horns.	$76
1685-0011	Window bars stainless steel pair for rear cab doors.	$351
1685-0026	Door Seat Riser Ovrlap drv/off for the Typhoon only.	$182

1685-0027	Heater Rear w/o Cover (PR)	$1,408
1685-0028	Heater Rear w/Cover (PR)	$1,503
1685-0039	Window bars stainless steel pair for canopy windows.	$351
1685-0056	Heater Rear w/o Cover (PR) and front heater with heat to the feet for the driver and officer	$1,408
1685-0057	Heater Rear with Cover (PR) and front heater with heat to the feet for the driver and officer	$1,503
1685-0058	Interior cab access panel. Driver side of cab for access to rear of shore line receptacle. Panel to be 8" x 8".	$284
1685-0059	Locking seat riser door. Driver and officer seat riser doors are to include a locking push-button latch. Key type to be 1250.	$140
1685-0061	Interior cab access panel. Officer side of cab for access to rear of shore line receptacle. Panel to be 8" x 8".	$284
1685-0062	Label package for Memphis units only, to include labeling of items behind all removable panels and check loose items in cab warning labor for off side dash and cab tilt access door.	$488
1685-0063	Medical glove box. Mount to rear area of engine cover. Includes slotted top for dispensing gloves without opening hinged lid. Box to be same color as interior of cab. Secure lid in closed position with small butterfly latch.	$235
1685-0064	Embossed diamond plate foot plates located at driver, officer and rear facing seat positions where feet would rest while seated.	$263
1685-0066	Officer seat riser storage compartment door to be on front of riser hinged towards engine cover.	$164
1685-0068	Rear engine cover diamond plate trim.	$202
1685-0069	Hinged interior cab gauge panel in front of driver. Includes (9) gauges- English dominant. Panel to be hinged for access to driver gauge cluster.	$1,997
1685-0084	3/16" Aluminum plate on top engine access door. To have swirl finish and be spaced up approx 1/2".	$235
1685-0085	Center cab dash electrical panel to be held in place with coin slot style fasteners.	$85
1685-0086	Stainless steel scuff plate under interior canopy window.	$312
1685-0089	Louvers for officers seat riser. Locate louvers in the front, side and door of riser.	$319
1685-0090	Rear cab headliner to be six pieces IPOS.	$242
1685-0093	Black rubber handrail mounted parallel to seats on rear of engine cover for driver and officer rear facing seats.	$168
1685-0094	Storage below rear bench seat. (1) horizontally hinged door on the front of the rear bench seat.	$405
1685-0095	Locking rear seat riser door (PR). Seat riser doors are to include a locking push-button latch. Key type to be 1250.	$140
1685-0104	Map pockets 14 gauge stainless steel (PR). Includes vinyl trim around top of opening and nylon strap with snap to retain contents. Locate pockets one each side on rear cab wall centered between center cabinet and side wall of cab with bottom approx 20" a	$381
1685-0105	Sun visor strap (PR) with snap fasteners.	$130
1685-0106	Rear engine cover radio cabinet. Cabinet to have access from the top and from rear.	$630
1685-0107	Interior grab handle rubber covered (2). Locate one each side at interior of rear cab door opening (at rear of opening).	$194
1685-0108	Locking seat riser door. Driver and officer seat riser doors are to include a locking push-button latch. Key type to be CH-751.	$73
1685-0109	Locking rear seat riser door (PR). Seat riser doors are to include a locking push-button latch. Key type to be CH-751.	$73
1685-0110	Storage below rear bench seat for two SCBA bottles (one each side).	$630
1685-0111	Rear cab interior wall overlay with swirl and clear coat finish.	$636
1685-0112	Integrated Roll Sensor (IRS) for RollTek air bag system.	$2,048
1685-0113	Integrated roll sensor slave module for RollTek air bag system.	$952
1685-0114	Integrated Head Curtain (IHC) for RollTek air bag system.	$574
1685-0115	Integrated Belt Pretensioner (IBP) for RollTek air bag system.	$333
1685-0116	Interior grab handle rubber covered (2). Locate one each side at interior of front cab door opening (at rear of opening).	$194
1685-0117	Rear cab interior wall overlay with Zolatone finish.	$414
1685-0119	3/16" Aluminum plate on top engine cover forward of access door. To have swirl finish and be spaced up approx 1/2".	$235
1685-0120	Rear cab interior wall overlay with diamond plate finish.	$521
1685-0121	Flat bar (.5" x 2") installed on rear cab wall up high with full length shelf track.	$292
1685-0126	SCBA Storage tubes (4) horizontally mtd (2) each side in lower rear cab compartments above floor level.	$736
1685-0127	Locate rear cab heaters below front of rear wall seat riser(s). Includes louvers on each side facing riser panel.	$344
1685-0134	Embossed diamond plate foot plates located at each seating position where feet would rest while seated.	$263
1685-0135	Hot climate insulation package. Includes insulation for ceiling, front wall, rear wall, side walls, below seat risers, and in doors.	$2,162
1685-0136	Storage in rear wall free standing seat riser. (1) horizontally hinged door on the front of the free standing seat riser.	$313
1685-0138	3/16" Aluminum plate on top engine cover forward of access door. Finish to match cab interior and be spaced up approx 1/2".	$235
1685-0139	3/16" Aluminum plate on top engine access door. Finish to match cab interior and be spaced up approx 1/2".	$235
1685-0146	Extended electrical access panel in cab. Panel to extend up to allow for radio/equipment installation.	$543
1685-0147	Narrow rear cab wall support channel. Not available with rear wall seating.	$200
1685-0153	Storage below rear bench seat. (2) horizontally hinged doors on the front of the rear bench seat.	$810
1685-0155	Cold climate insulation package. Includes insulation for ceiling, front wall, rear wall, side walls, below seat risers, and in doors.	$2,162
1685-0161	Severe duty dash package. Includes alum center dash, officer side dash, and lower kick panel(s). Smooth plate painted to match cab interior.	$870
1685-0162	Severe duty engine cover. Includes floor type matting on sides, top forward and top rearward engine covers with sanded finish smooth aluminum trim.	$943
1685-0164	Severe duty engine cover. Includes floor type matting on sides, top forward and top rearward engine covers with smooth aluminum trim painted to match cab interior.	$1,108

1700-0001	Alternator Leece Neville dual 270amp. 480 amp NFPA/540 amp SAE rating. Available only on Detroit EGR Series 60 engines.	$3,525
1700-0002	Alternator Niehoff 250amp. (250 amp SAE/240 NFPA rating). Not available on Cummins ISC or Detroit Diesel engines.	$2,269
1700-0003	Alternator Leece Neville. (270 amp SAE/240 NFPA rating).	$1,926
1700-0004	Alternator Niehoff 290 amp (290 amp SAE/265 NFPA rating). Not available on Cummins ISC, ISL or Detroit Diesel engines.	$3,458
1700-0005	Alternator Leece Neville 320amp. 320 Amp SAE/275 NFPA Neville	$2,996
1700-0006	Alternator Niehoff 400amp (400 Amp SAE/385 NFPA rating). Cyclone II w/Cummins ISM. Not available on Detroit Diesel Engines Recycle requires Eng. Review.	$5,245
1700-0008	Alternator Leece Neville dual 320amp. 560 amp NFPA/540 amp SAE rating. Available only on Detroit EGR Series 60 engines.	$4,848
1700-0009	Alternator Niehoff 300 amp (300 amp SAE/270 NFPA rating). Detroit Diesel S60 engine w/EGR only.	$2,999
1700-0010	Noise filter for Leece Neville alternator.	$194
1700-0011	Alternator Niehoff 340 amp. Not available on Cummins ISC, ISL or Detroit Diesel engines.	$4,069
1750-0000	Ammeter gauge in cab 0-300amp	$293
1750-0001	Dome lights clear large one for each cab door.	$129
1750-0002	Dome lights red large one driver side one officer side	$129
1750-0004	Dome lights red large one driver side one officer side rear of cab	$129
1750-0006	Map light flexible arm. Located [#LOC]	$182
1750-0008	Radio AM/FM cassette with weather band located [#LOC]	$481
1750-0009	Radio AM/FM CD with weather band located [#LOC]	$737
1750-0010	Radio speakers additional pair. Locate each side rear cab ceiling.	$248
1750-0011	Speedometer officer's side overhead.	$282
1750-0012	Swivel reading lamps (PR) overhead between driver and officer. Lights to be individually switched.	$98
1750-0013	Turn signal Whelen 600 LED arrow amber pair located [#LOC]	$585
1750-0015	Windshield fans 8" pair. Location:[#LOC]	$341
1750-0016	Pump hourmeter in cab.	$121
1750-0018	Battery charger Super Smart 20 AMP with 120V Kussmaul air compressor.	$1,472
1750-0019	Battery charger Super Smart 110 volt, 20 amp.	$381
1750-0021	Battery charger Kussmaul model 1200, 40 amp	$641
1750-0022	Battery charger Kussmaul 40 amp model 1200 with air compressor.	$2,165
1750-0024	Auto eject receptacle inlet 20amp located [#LOC] with a [#COL] cover.	$521
1750-0025	Auto eject receptacle inlet 30amp 120v located [#LOC] and with a [#COL] cover.	$762
1750-0026	Clamshell controller mounted on officer's side of engine cover for the air horns.	$112
1750-0027	Control push button switch officer dash for Q2B siren	$85
1750-0029	Switch horn button two position DOT/air horn	$89
1750-0030	Switch horn button two position DOT/electronic siren	$89
1750-0031	Switch horn button two position DOT/Q2B	$89
1750-0032	Switch horn button three position DOT/air horn/electronic siren	$183
1750-0033	Switch horn button three position DOT/air horn/Q2B	$183
1750-0034	Switch additional 12 volt/15amp. Location and function: [#LOC].	$183
1750-0035	Cornering light relay circuits for lights on sides of cab and / or bumper. Includes (2) relays. Requires scene light option. Interlocked with park brake.	$373
1750-0039	Mrkr Pkg Chas LEDTrklt-Pmp/Res	$501
1750-0040	Battery charger Super Smart 220 volt 50 Hz, 20 amp.	$381
1750-0042	Sw Horn Button 3Pos DOT/ES/Q2B	$183
1750-0043	12V power distribution module. Includes (6) battery hot and (6) switched hot circuits. 100 amps max (IATS).	$282
1750-0047	The chassis shall be pre wired for dealer installation of On-Spot tire chains.	$386
1750-0048	Round clear incandescent light mounted in the [#LOC] door.	$31
1750-0049	Round red incandescent light mounted in the [#LOC] door.	$31
1750-0050	Round amber incandescent light mounted in the [#LOC] door.	$31
1750-0052	Round clear LED light mounted in the [#LOC] door.	$148
1750-0053	Round red LED light mounted in the [#LOC] door.	$54
1750-0054	Round amber LED light mounted in the [#LOC] door.	$54
1750-0059	Receptacle inlet 20amp with a [#COL] cover. Location: [#LOC]	$262
1750-0060	Auto transfer switch 120 volt. Includes 8 place breaker box. Allows interior receptacles to be powered by either shore power or generator.	$692
1750-0061	Control push button switch officer dash for air horns	$85
1750-0062	Control push button switch officer dash for siren	$85
1750-0063	Clamshell controller mounted on on officer's side of engine cover for Q2B.	$112
1750-0064	Clamshell controller mounted on on officer's side of engine cover for electronic siren.	$112
1750-0065	Turn signal Whelen 600 halogen amber pair located [#LOC]	$257
1750-0066	Halogen front turn signal amber (PR). Locate: [#LOC]	$249
1750-0071	Mount customer supplied antenna on cab roof. Location: [#LOC]	$157
1750-0072	12 volt electrical outlet in the cab wired battery hot. Location: [#LOC].	$53
1750-0073	Antenna base Tessco P/N 90942 (NMO Motorola Style - also called MATM style) on cab roof. Location: [#LOC].	$84
1750-0074	Interlock to position front intake for cab tilting.	$251
1750-0075	English dominant main cab gauge cluster.	$1,853
1750-0076	Metric dominant main cab gauge cluster.	$1,962
1750-0077	Turn signal Code 3 model 65 LED amber with arrow insert (PR). Location: [#LOC].	$654
1750-0078	Light Whelen model PSR00FRR LED (4) red. Horizontally mounted flashing strip light on each of the inside lower cab door panels. Wire through door switch.	$719
1750-0079	Fuel gauge for officer.	$227

1750-0080	Conduit flexible 1.5" for radio installation center of dash to compartment under officer's seat.	$273
1750-0082	12V power distribution module. Includes (6) battery hot and (6) switched hot circuits. 100 amps max (IATS). Location: [#LOC]	$282
1750-0083	Turn signal Federal Signal QuadraFlare QL64Z-ARROW LED amber pair located [#LOC]	$249
1750-0088	Whelen 500 LED red door ajar light. Model 50R00FRR light with 5FLANGEC flange.	$169
1750-0090	Light Whelen LED strip model PSCACCCR to illuminate cab floor. Horizontally mounted on seat riser. Wire through door switch. Location: [#LOC]	$311
1750-0091	Battery Saver Kussmaul model 091-35-HO wired to battery charger receptacle.	$633
1750-0095	Second DOT traffic horn	$119
1750-0096	Bracket for Motorola Spectra Radio in the center overhead console offset to officer side. Dim: 7"W x 2"H, must be size of the opening after break.	$73
1750-0115	Master warning light switch to have a red cover (or bezel).	$34
1750-0117	Auto eject receptacle inlet 15 amp 250 volt with a [#COL] cover. Location: [#LOC]	$476
1750-0118	Flexible 2" conduit with connectors. Location: Officer cab dash to bottom of medical cabinet.	$334
1750-0121	Ammeter gauge in cab 0-400amp Cruz Pro digital.	$438
1750-0123	Auto eject receptacle inlet 15amp location or function [#LOC] and the color shall be [#COL].	$473
1750-0124	Whelen 4" round LED red door ajar light. Model 20R00FCR light with 2FLANGEC bezel.	$169
1750-0125	Block heater receptacle 15amp with a [#COL] cover. Location [#LOC].	$262
1750-0126	Conduit flexible 1.5" for radio installation center of dash to area behind officer's seat.	$273
1750-0131	Pyrometer gauge in cab.	$520
1750-0132	Auto transfer switch for additional battery charge receptacle.	$418
1750-0133	Conduit flexible 1.5" for radio installation center of dash to rear bench seat.	$273
1750-0134	Conduit flexible 1.5" for radio installation rear bench seat to pump panel.	$419
1750-0144	Q2B brake switch to have a red cover (or bezel).	$34
1750-0145	Relocate the battery charger and (if applicable) air compressor to below the rear wall bench seat or rear center wall medical cabinet (if equipped).	$504
1750-0148	Turn signal Whelen 700 LED Chevron amber (PR). Locate [#LOC].	$612
1750-0149	Control push button switch officer dash for Q2B siren brake.	$85
1750-0150	Block heater receptacle 20amp auto eject with a [#COL] cover. Location [#LOC].	$521
1750-0151	Receptacle inlet 15amp with a [#COL] cover. Location: [#LOC]	$262
1750-0156	Special EQ2B power amplifier location. Amp to be located [#LOC].	$252
1750-0157	Special battery charger location. Charger to be located [#LOC].	$252
1750-0158	Dome Lts Red/White LED. Package includes two lights mounted in the front and two mounted in the rear of the cab. White light wire through door and light assembly switch. Red light through light assembly switch.	$737
1750-0159	3 Position Q2B momentary switch (activate/off/brake). Loc: [#LOC].	$183
1750-0160	Dome Lts Red/White Incandescent. Package includes two lights mounted in the front and two mounted in the rear of the cab. Front cab lights: White light wired through door and light assembly mounted switch. Red light through light assembly mounted switch.	$873
1750-0161	Air compressor, Kussmaul model 091-9B-1 120V.	$893
1750-0162	Battery charger Kussmaul model 091-35/10, 35 amp battery charger / 10 amp battery saver.	$748
1750-0163	Speedometer officer's side swtch panel.	$282
1750-0164	Fuel gauge for officer. Location: officer switch panel.	$227
1750-0165	Conduit flexible 1.5" for radio installation center of dash to compartment under driver's seat.	$273
1750-0166	ATC Override switch.	$183
1750-0167	Block heater to be wired to battery charger receptacle with a lighted on/off switch behind driver seat.	$182
1750-0168	Dome Lts Red/White 4" incandescent (5). Lights to be located two front and three rear. White light wired through door and light assembly mounted rocker switch. Red light through light assembly mounted rocker switch.	$664
1750-0169	Radio speakers (3). Locate officer ceiling and each side rear cab ceiling. Wiring to terminate in officer side overhead console for customer supplied radio(s).	$426
1750-0171	Clamshell controller mounted on on driver's side of engine cover for Q2B.	$112
1750-0172	Special battery charger and air compressor location. Charger and air compressor to be located [#LOC].	$252
1750-0173	Rocker switch cover (or bezel) to be red. Location: [#LOC].	$34
1750-0176	Light Whelen model 70RA6FCR Super LED (4) split red/amber with chrome flanges. Horizontally mounted flashing lights on each of the interior cab door panels outboard mounted. Wire through door switch.	$1,469
1750-0177	Receptacle inlet 30amp twist lock with a [#COL] cover. Location: [#LOC].	$504
1750-0178	Windshield fan 8". Location: rear facing mounted on driver side 3x3 post.	$171
1750-0179	Dome light red/white Incandescent for tiller cab. White light wire through door and light assembly switch. Red light through light assembly switch.	$128
1750-0180	Dome light red/white LED for tiller cab. White light wire through door and light assembly switch. Red light through light assembly switch.	$185
1750-0181	Dome light red/white 4" incandescent for tiller cab. White light wired thru door and light assembly mounted rocker switch. Red light thru light assembly mounted rocker switch.	$133
1750-0182	Dome light red/white 4" LED for tiller cab. White light wired through door and light assembly mounted rocker switch. Red light through light assembly mounted rocker switch.	$345
1750-0186	Dome Lts Red/White Incandescent additional. White light wire through door and light assembly mounted switch. Red light through light assembly mounted switch. Location: Centered rear of cab.	$129
1750-0187	Auto drain, Kussmaul model 091-9-089 120V. For use with air compressor 091-9B-1 only.	$187
1750-0188	DPF Regeneration override switch.	$183
1750-0189	Gauge ambient temperature with digital display. Locate display on officer side switch panel.	$754
1750-0192	Aerial engagement switch in cab to have a red cover (or bezel).	$34
1750-0193	Oil level sensor light in cab to indicate drop in hydraulic reservoir oil level. Interlock w/parking brake, tag to read "Power Steering System Failure, Stop Vehicle".	$126
1750-0194	Dome Lts Red/White LED additional (PR). White light wire through door and light assembly switch. Red light through light assembly switch. Location: Rear crew area.	$369

1750-0195	Cab dome lts red/white (2 red/white, 2 white) 4" incandescent. White light wired thru door and light assembly mounted rocker switch. Red light thru light assembly mounted rocker switch. Red/white located in front of cab, white located at rear cab doors.	$531
1750-0196	Battery charger Newmar model PT-80, 80amp.	$3,210
1750-0197	Clamshell controller mounted on driver's side of engine cover for the air horns.	$112
1750-0203	Special location for battery charger indicator. Location: [#LOC].	$100
1750-0205	Handheld flashlight, orange Streamlight Vulcan flashlight with vehicle mount system. Location: [#LOC].	$232
1750-0206	Clamshell controller mounted on on officer's side cab dash for Q2B and air horns.	$112
1750-0208	Light Whelen model PSA00FAR LED (4) amber. Horizontally mounted flashing strip light on each of the interior lower cab door panels outboard. Wire through door switch.	$719
1750-0209	Clamshell controller mounted on on officer's side of engine cover (knee height) for Q2B.	$112
1750-0214	Mount customer supplied GPS antenna on cab roof. Location: [#LOC].	$157
1750-0215	Turn signal Whelen M6 LED arrow amber pair located [#LOC].	$592
1800-0000	Cooling system for 2004 compliant engines, Typhoon only.	$5,610
1800-0001	Cooling for EGR engines. Includes charge air cooler.	$5,814
1800-0003	Coolant System Overflow Recovery System, CRS-150	$503
1800-0005	Cooling system for use with Cyclone II X, Typhoon X, and Quest chassis. Includes coolant recovery system.	$5,814
1800-0006	Remote coolant filter for Engine Cooling System (Cummins ISC and ISL Engines Only)	$497
1800-0013	Cooling system for use with Cyclone II X, Typhoon X, and Quest chassis. For use with 2010 EPA engines. Includes coolant recovery system.	$6,551
3000	**Body**	
3080-0008	Body aerial HP75 / HP78 with center hose bed. Configured for midship pump and 400-500 tank. Single axle 100" wide body. Includes L and R rescue style high sides. The rear turntable access door to match the rear body finish.	$39,997
3080-0010	Body aerial HP75 / HP78 SideStacker Quest / CII / Typhoon with pump. Single axle. Includes pocket style drop down step at left rear staircase. The rear access doors to match the rear body finish.	$44,347
3080-0030	Tiller body without pump. Includes tool compartment at rear of body below ladder tunnel and staircases with pocket style flop down steps each side of tractor body.	$57,496
3080-0031	HP95 MidMount front body with pump.	$18,997
3080-0032	HP95 MidMount front body without pump.	$19,034
3080-0033	HP95 MidMount front body without pump low travel height.	$18,135
3080-0034	HP95 MidMount center body with pump and 300g tank.	$16,206
3080-0035	HP95 MidMount center body with pump and 500g tank.	$16,206
3080-0036	HP95 MidMount center body with pump and 300g tank. Includes optional officer's side compartment above rear wheels.	$16,452
3080-0037	HP95 MidMount center body with pump and 500g tank. Includes optional officer's side compartment above rear wheels.	$16,452
3080-0038	HP95 MidMount center body without pump.	$15,341
3080-0039	HP95 MidMount center body without pump with wide ladder tunnel.	$16,483
3080-0040	HP95 MidMount center body without pump low travel.	$16,150
3080-0041	HP95 MidMount rear body with hosebed.	$22,688
3080-0042	HP95 MidMount rear body without hosebed.	$23,679
3080-0043	HP95 MidMount rear body with narrow hosebed and shallow rescue style officer's side compartments.	$24,520
3080-0044	HP95 MidMount rear body with wide ladder tunnel and no hosebed.	$23,679
3080-0045	HP95 MidMount rear body without hosebed low travel.	$22,366
3080-0046	HP95 MidMount center body with pump and 300g tank. Includes optional officer's side shallow compartment above rear wheels.	$17,040
3080-0047	HP95 MidMount center body with pump and 500g tank. Includes optional officer's side shallow compartment above rear wheels.	$17,040
3080-0057	Body aerial HP100 Platform without pump. 100" wide with L and R extended rescue style high sides, seperate rear side compartments and rear side staircases. The door on small compt next to rear outrigger to match wheelwell.	$52,541
3080-0064	Body aerial HP75 / HP78 SideStacker Quest / CII / Typhoon with pump. Single axle. Includes extended R1 compt and pocket style drop down step at left rear staircase. The rear access doors to match the rear body finish.	$44,347
3080-0066	Body aerial HP75 / HP78 with center hose bed. Configured for midship pump and 400-500 tank. Single axle 100" wide body. Includes L and R rescue style extended high sides. The rear turntable access door to match the rear body finish.	$42,112
3080-0067	Body aerial HP75 / HP78 with combined extended height front side compts, beavertail compts combined w/rear side compts and center hose bed. Configured for midship pump and 400-500 tank. Single axle 100" wide body. The rear turntable access door to match	$45,522
3080-0069	Body aerial HP75 / HP78 SideStacker Quest / CII / Typhoon with pump. Single axle. Right side ahead of rear axle to have two seperate compts, 24"w R1 and 32"w R2. Includes pocket style drop down step at left rear staircase. The rear access doors to match t	$45,208
3080-0072	Tiller body - without pump. Includes tractor body w/12" wide compts (140" WB w/58" cab), trailer body with raised compts (L2/R2-L6/R6), 50" wide ladder tunnel, tool compartment at rear of body below ladder tunnel and staircases with pocket style flop down	$60,133
3080-0074	Body aerial HP100 Platform 250" WB 67.5/68 cab without pump. 100" wide with L and R extended rescue style high sides, seperate rear side compartments (tall compartment to be ahead of outrigger) and rear side staircases. The door on small compt to rear of	$52,013
3080-0075	Tiller body - without pump. Includes tractor body w/22"w compts (150" WB w/58" cab), raised trailer body (L2/L3/L4/L5/L6, R2/R3/R4/R5/R6, 50" wide ladder tunnel, tool compartment at rear of body below ladder tunnel and staircases with pocket style flop do	$61,188

3080-0079	Body aerial HP100 Platform 250" WB 68 cab without pump. 100" wide with L and R extended rescue style high sides, 3/16" smooth plate floors, seperate rear side compartments (tall compartment to be ahead of outrigger) and rear side staircases. The door on s	$53,321
3090-0019	Body Specs - SideStacker aerial with tandem axle. Includes left rear staircase with pocket style drop down step and 3/16" smooth plate compartment floors.	$1,240
3110-0027	Rear of body to have un-painted extrusions with un-painted smooth plate body panels or just unpainted smooth plate to facilitate rear body striping.	$230
3110-0028	Rear body panels to be painted smooth plate.	$812
3110-0058	Rear of body to have flush un-painted smooth plate body panels to facilitate rear body striping.	$1,197
3110-0072	Rear of body to have flush painted smooth plate body panels.	$1,464
3110-0079	Rear of body to have painted extrusions with un-painted smooth plate body panels to facilitate rear body panel striping.	$230
3130-0059	Pump module HP75 / HP78. Includes running boards.	$6,822
3134-0006	The gauge panel on the driver side of the Side Mount module is to be hinged downward. Includes two (2) cable hold opens, and latches.	$122
3134-0009	The gauge panel(s) on the driver side of the Side Mount module to be hinged upward. Includes two (2) gas shock hold opens and latches.	$122
3134-0011	Officer side pump panel to be vertically hinged on forward extrusion. Panel(s) to be secured in the closed position with push button latches. Upper panel to be held open with gas shock.	$457
3134-0019	The driver and officer side pump panels are to be painted Zolatone black.	$581
3134-0020	The driver and officer side pump panels are to be painted Zolatone gray.	$581
3134-0028	Pump panel layout and approval drawing to match existing and/or previous unit. To match as close as possible (Engineering and/or vendor requirements may alter final panel layout).	$385
3134-0039	The gauge panel on the driver side pump panel is to be hinged upward. Includes two spring type hold opens, two trigger latches, and a recessed handle.	$122
3134-0053	Officer side pump panel Escutchion Plate shall be attach with Thumb Latch.	$162
3134-0055	Officer side upper pump access panel to be horizontally hinged with stainless steel door. Includes (2) push button latches and (2) hold open devices.	$192
3134-0064	The gauge panel(s) on the driver side of the Side Mount module to be hinged upward. Panel(s) to include (2) mechanical/pneumatic (as applicable to panel size) hold opens and latches.	$122
3136-0000	Air horn switch at pump panel. Switch to be labeled "Evacuation Alert". Location: [#LOC].	$127
3136-0001	Backboard storage compartment located to rear of crosslays. Includes vertically hinged diamond plate access door each side.	$950
3136-0002	Microphone box. Locate at the [#LOC].	$452
3136-0003	Microphone Box Cast Products. Locate at/in the [#LOC].	$421
3136-0004	The lower area of the pump compartment to have a four (4) sided heat pan with two (2) removable (side to side) bottoms. Bottoms to be secured in the closed position with mechanical fasteners.	$922
3136-0005	The crosslay divider(s) to be notched both ends for Task Force Nozzle.	$111
3136-0006	Two (2) pump compartment heaters are to be mounted in the pump area. Locate as low as possible.	$1,500
3136-0011	P-Rubber in flex joint(s) between pump module and/or body modules.	$549
3136-0023	Microphone Box Cast Products. Locate at/in the [#LOC].	$448
3136-0025	Microphone box. Dimensions for microphone box are 14" wide x 6.5" high x 5.5" deep. Locate at the [#LOC].	$497
3136-0029	Air horn switch at pump panel. Switch to be labeled "Air Horn". Location: [#LOC].	$127
3136-0033	Crosslay divider(s) to be lowered approx 5" to provide room for bail handled nozzle(s) below cover.	$111
3136-0034	Microphone box 10W X 6H X 11D located on pump operator panel.	$515
3136-0045	Microphone Box Cast Products. Locate at/in the [#LOC].	$448
3136-0047	Backboard storage compartment located to rear of crosslays. Includes vertically hinged smooth plate painted job color access door each side.	$1,165
3136-0051	Air horn switch at pump panel. Switch to be labeled "Code Red". Location: [#LOC].	$127
3136-0056	The crosslay divider(s) to be held 12" short both ends.	$369
3136-0061	Heat pan removable bottoms to have screws and nuts in place of butterfly latches.	$250
3136-0064	The lower area of the pump compartment to have a four (4) sided heat pan with two (2) removable (side to side) bottoms. Bottoms to be secured in the closed position with butterfly latches.	$922
3300-0007	Door single vertically hinged painted. Location(s): [#LOC]	$681
3300-0008	Door double vertically hinged painted. Location(s): [#LOC]	$757
3300-0009	Door single vertically hinged diamond plate. Location(s): [#LOC]	$476
3300-0010	Door double vertically hinged diamond plate. Location(s): [#LOC]	$681
3300-0011	Door single horizontally hinged lift-up painted. Location(s): [#LOC]	$661
3300-0012	Door single horizontally hinged lift-up diamond plate. Location(s): [#LOC]	$512
3300-0013	Door roll up short (up to 45") with satin finish POK. Location(s): [#LOC]	$686
3300-0014	Door roll up tall (greater than 45") with satin finish POK. Location(s): [#LOC]	$982
3300-0015	Door roll up short (up to 45") with painted finish POK. Location(s): [#LOC]	$1,099
3300-0016	Door roll up tall (greater than 45") with painted finish POK. Location(s): [#LOC]	$1,392
3300-0017	Door roll up short (up to 45") with satin finish ROM. Location(s): [#LOC]	$764
3300-0019	Door roll up tall (greater than 45") with satin finish ROM. Location(s): [#LOC]	$1,090
3300-0021	Door roll up short (up to 45") with painted finish ROM. Location(s): [#LOC]	$1,296
3300-0022	Door roll up tall (greater than 45") with painted finish ROM. Location(s): [#LOC]	$1,621
3300-0025	Door single horizontally hinged drop down painted. Location(s): [#LOC]	$546
3300-0030	Door double 3-point vertically hinged painted. Location(s): [#LOC]	$1,512
3300-0062	Keyed compartment door latch with #1250 key. Location(s): [#LOC]	$71
3300-0063	Keyed roll-up compartment door with #1250 key. Location(s): [#LOC]	$126
3300-0064	All apparatus doors, body and chassis, are to be keyed alike. Not avail on Commercial Chassis. Requires keyed latch option to be included in shop order.	$280
3300-0065	Electric lock for an ROM roll-up door (EA). The door to lock on both sides of compartment as applicable. Includes manual J236 key lock. Location(s): [#LOC]	$559

3300-0066	Drip pan for a ROM roll-up door (EA). Location(s): [#LOC]	$152
3300-0079	Reverse hinge driver side single forward body compartment door.	$140
3300-0096	Keyed roll-up compartment door with #J236 key. Location(s): [#LOC]	$126
3300-0097	Keyed compartment door latch with #J236 key. Location(s): [#LOC]	$71
3300-0099	Intergrated sill plate. Water Dam type door sill for ROM rollup door. Location(s):[#LOC]	$130
3300-0103	Door double vertically hinged smooth plate sanded. Location(s): [#LOC]	$757
3300-0105	Door roll up tall (greater than 45") with satin finish Amdor. Location(s): [#LOC]	$1,423
3300-0106	Door roll up short (up to 45") with satin finish Amdor. Location(s): [#LOC]	$1,019
3300-0107	Pull down straps for lift-up door. Loc: [#LOC]	$93
3300-0117	Reverse hinge officer side single forward body compartment door.	$140
3300-0120	Electric lock for a ROM roll-up door (EA). The door to lock on both sides of compartment as applicable. Includes manual 1250 key lock. Location(s): [#LOC]	$559
3300-0121	Door bi-fold horizontally hinged painted. Location(s): [#LOC]	$839
3300-0133	Door single horizontally hinged drop down sanded smooth plate. Location(s): [#LOC].	$433
3300-0135	Door double 3-point vertically hinged smooth plate sanded. Location(s): [#LOC]	$1,512
3300-0138	Keyed compartment door latch with #CH751 key. Location(s): [#LOC]	$71
3300-0139	Door double 3-point horizontal hinged painted. Location(s): [#LOC]. Lower door should act as an exterior writing surface, w/ adjustable angles.	$1,512
3300-0140	Door single horizontally hinged drop down diamond plate. Location(s): [#LOC].	$410
3305-0000	Diamond plate generator cover.	$918
3305-0001	Cover aluminum (2) piece with recessed handles, SideStacker. Note: This option effects hosebed capacity.	$1,729
3305-0002	Bi-Fold diamond plate cover for the crosslay area. Includes applicable grab handle(s) and (2) hold downs. Non-aerial applications to be tagged as a non-stepping surface.	$804
3305-0003	Single diamond plate cover for the crosslay area. Includes applicable grab handle(s) and (2) hold downs. Non-aerial applications to be tagged as a non-stepping surface.	$544
3305-0007	Vinyl [#COL] hosebed cover with attached rear flap(s).	$784
3305-0008	Vinyl [#COL] crosslay cover with attached side flaps.	$274
3305-0017	Nylon black strap on running board suction tray (EA). Location: [#LOC]	$71
3305-0022	Vinyl rear cover for diamond plate hosebed cover. Color: [#COL]	$242
3305-0023	Nylon black cargo net at rear of diamond plate or vinyl hosebed cover.	$510
3305-0024	Vinyl [#COL] side covers for diamond plate crosslay cover.	$171
3305-0025	Nylon black cargo net on sides for crosslay cover.	$202
3305-0028	Vinyl [#COL] cover for running board suction tray. Location: [#LOC]	$171
3305-0029	Nylon black strap on running board suction tray (EA). For use with rolled hose. Location: [#LOC]	$81
3305-0033	Cover vinyl access for fill tower(s).	$180
3305-0034	Vinyl [#COL] hosebed cover without attached rear flap(s). Requires rear cover option.	$664
3305-0040	Nylon black strap with clip release on running board suction tray (EA). Location: [#LOC]	$127
3305-0060	Diamond plate cover for running board suction tray(s). Includes push-button latches and gator grip. Location(s): [#LOC].	$341
3305-0062	Cover aluminum (1) piece with recessed handles, SideStacker. Note: This option effects hosebed capacity.	$1,206
3305-0064	Nylon black strap with aluminium quick release buckle for hose tray. Strap to attach to side walls of tray down low as applicable. Location: [#LOC].	$104
3305-0066	Vinyl cover for front headboard opening. Cover to be black with twist locks in the corners and snaps on the sides.	$232
3305-0067	Vinyl cover for open storage area. Color: [#COL]	$664
3305-0070	Diamond plate portable pump cover.	$1,118
3305-0080	Diamond plate cover for running board suction tray(s). Includes push-button latches and gator grip. Includes cords to prevent covers from dropping to the ground when removed. Location(s): [#LOC].	$375
3305-0094	Fire Retardent Vinyl [#COL] crosslay cover with attached side flaps.	$548
3310-0017	Auxiliary jack pad 24X24 (PR) with side mounted handle. Includes mounting brackets.	$1,064
3310-0018	Auxiliary jack pads 24X24 (4). Includes pads with side mounted handle and mounting brackets to store (2) each side of the body next to front drop down jacks.	$1,520
3310-0020	Step fold-down rear (EA).	$847
3310-0021	Step flop down rear 24" wide rung type (EA).	$521
3310-0024	Tailboard 12" bolt on-G067. Includes handrail below hosebed and (1) underbody ground light on the officer's side.	$655
3310-0029	Auxiliary jack pad 26X26 (4) with side mounted handle. Includes (2) double mounting brackets.	$1,822
3310-0032	Recessed tubes for (6) pike poles. Not available on HP75 SideStacker.	$585
3310-0033	Pikepole/Ladder storage. Available on HP75 SideStacker only. The access door to match the rear body finish.	$585
3310-0037	Rear ladder tunnel doors. Vertically hinged diamond plate.	$633
3310-0038	Rear ladder tunnel door. Diamond plate lift up door to open 20 degrees past horizontal.	$671
3310-0050	Crosslay triple 5.5" wide single stack to hold up to 200' of 2.0" DJ (each) or 150'-200' 2.5" DJ (each). Includes storage pan to rear of crosslays	$3,324
3310-0051	Crosslay double to hold up to 200' of 2.0" DJ (each). Includes storage pan to rear of crosslays.	$2,449
3310-0052	Crosslay double 5.5" wide single stack to hold up to 200' of 2.0" DJ (each) or 150'-200' 2.5" DJ (each). Includes storage pan to rear of crosslays.	$2,449
3310-0053	Crosslay double to hold up to 400' of 2.0" DJ (each). Includes storage pan to rear of crosslays.	$2,870
3310-0054	Crosslay triple to hold up to 200' of 2.0" DJ (each). Includes storage pan to rear of crosslays.	$3,324
3310-0055	Crosslay double w/dry lay. Includes (2) 5.5" wide single stack crosslays to hold up to 200' of 2.0" DJ or 150'-200' 2.5" DJ (each) and (1) 11" wide dry lay for up to 300' of 3.0" DJ. Includes storage pan to rear of crosslays.	$3,324
3310-0056	Crosslay Double (1) Single (1) Double Stacked Midmount. Forward lay 5.5"W x 18"D to hold up to 200' of 2" DJ. Rearward lay 11.25"W x 18"D to hold up to 600' of 1.75" or 350' of 2.5" DJ. Midmount only.	$2,464
3310-0057	Crosslay double to hold up to 400' of 2.0" DJ (each).	$2,464
3310-0058	Crosslay triple 5.5" wide single stack to hold up to (2) 200' of 2.0" DJ (each) and up to 200' 2.5" DJ.	$2,631

3310-0059	Storage box at rear of body for handheld jack control 12W x 13H x 8D. Locate below extended top step. Material to be the same as rear body surface.	$309
3310-0060	Boxed out rear ladder tunnel doors. Vertically hinged diamond plate.	$996
3310-0062	Rectangular beavertail compartments with double pan door opening to outside. Door opening raised for warning light.	$3,411
3310-0066	Cover plate over hydraulic generator lines located towards front of compartment below generator.	$228
3310-0069	Rear ladder tunnel doors. Vertically hinged smooth plate to match rear body finish.	$799
3310-0070	Rear ladder tunnel door. Smooth plate lift up door to open 20 degrees past horizontal. Door will match rear body finish.	$837
3310-0071	Boxed out rear ladder tunnel doors. Vertically hinged smooth plate. Doors to match rear body finish.	$1,218
3310-0072	Compartments driver side HP100 Platform SideStacker with 300g tank. Includes rescue style extended height compartments. The door on small compts next to rear outrigger to match wheelwell.	$38,125
3310-0073	Compartments officer side HP100 Platform SideStacker with 300g tank. Includes rescue style extended height compartments ahead of wheel well with extended hosebed.	$27,241
3310-0074	Compartments officer side HP100 Platform SideStacker with 300g tank. Includes rescue style extended height compartments ahead of wheel well, compartment over forward tandem and extended hosebed.	$28,348
3310-0075	Upper dunnage area extension 34 x 58 diamond plate.	$501
3310-0076	Body wheelwell compartments (4) approx 24" W x 6" H x 26" D with drop down doors. Door material to match wheelwell finish.	$1,284
3310-0079	Stainless steel trim on bottom edge of rear ladder tunnels, turntable access and pike pole compartment openings.	$450
3310-0080	Crosslay triple (2) 5.5" wide single stack to hold up to 200' of 2.0" DJ (each) and (1) 10.5" wide to hold up to 300'-400' of 2.5" DJ. Includes storage pan to rear of crosslays	$3,324
3310-0081	Jack leg opening cover diamond plate (4). Includes diamond plate outrigger cover and diamond plate filler panel.	$759
3310-0082	Wall at rear of upper open storage area bolt-in 3/16 Dia Plt. with diamonds facing rear.	$343
3310-0095	Rear ladder tunnel doors. Vertically hinged diamond plate with slam latch style d-ring assemblies.	$699
3310-0096	Doors for rear master and jack control controls. Doors will match rear body finish.	$364
3310-0099	Jack leg covers painted job color. Includes (2) painted extension covers and (2) painted fixed covers.	$1,521
3310-0100	Enclosed pump panels. Upper door opening stepped up to allow crosslays to be accessed from inside compartment. Includes hinged diamond plate crosslay cover.	$7,694
3310-0103	Crosslay single w/dry lay. Includes (1) dbl stack for 200' of 2.0" DJ in forward lay and (1) 20" wide dry lay for up to 400' of 2.5" DJ. Includes storage pan to rear of crosslays.	$3,324
3310-0104	Crosslay double, forward lay 7.5" w x 18" d to hold up to 400' of 2" DJ. Rearward lay 9.25" w x 18" d to hold 350' of 2.5" DJ. Midmount only.	$2,464
3310-0105	Crosslay double w/dry lay. Includes (2) 4.25" wide single stack crosslays to hold up to 200' of 2.0" DJ (each) and (1) 5.5" wide dry lay for up to 200' of 2.5" DJ. Includes storage pan to rear of crosslays.	$3,324
3310-0106	Rear ladder tunnel doors. Horizontally hinged drop down diamond plate.	$633
3310-0107	Transverse compartment floor to be extended out to door opening in L1/R1.	$762
3310-0108	Pan shallow for generator. Locate at front of open storage area.	$577
3310-0110	Boxed out rear ladder tunnel doors. Horizontally hinged diamond plate (drop down).	$996
3310-0111	Recessed tubes for (4) pike poles. Not available on HP75 SideStacker.	$468
3310-0113	Upper body side panels to be smooth plate painted job color IPO D.P.	$687
3310-0114	Crosslay triple (2) 5.5" wide single stack to hold up to 200' of 2.0" DJ or 150'-200' 2.5" DJ (each) and (1) 11" wide double stack for up to 300' of 3.0" DJ. Includes storage pan to rear of crosslays.	$3,324
3310-0115	Jack leg covers polished stainless steel. Includes (2) polished stainless steel extension covers and (2) painted fixed covers.	$1,667
3310-0116	Transverse compartment floor to be extended out to approx 4" from inside of door opening in L1.	$505
3310-0117	Pikepole/backboard storage. Available on HP75/78 SideStacker only. The access door to match the rear body finish.	$585
3310-0118	Crosslay triple w/dry lay. Includes (2) 5.5" wide single stack crosslays to hold up to 200' of 2.0" DJ (each), (1) 6" wide single stack crosslay to hold up to 150'-200' 2.5" DJ and (1) 6" wide dry lay for up to 150-200' of 3.0" DJ. Includes storage pan to	$4,200
3310-0120	Transverse compartment floor to be extended out to door opening in R1.	$381
3310-0123	Crosslay double w/dry lay. Includes (2) 5.5" wide single stack crosslays to hold up to 200' of 2.0" DJ or 150'-200' 2.5" DJ (each) and (1) 5.5" wide dry lay for up to 150-200' of 2.5" DJ. Includes storage pan to rear of crosslays.	$3,324
3310-0124	Raised lip 3" high 3/16" dia plt on each end of center raised transverse compartment floor. Loc: L4/R4.	$359
3310-0125	Recessed tubes for (4) pike poles. Tubes to be for (2) 8' and (2) 10' poles.	$468
3310-0126	Storage compartment on top of body. Box to be dia plt approx 90L x 10H x 16W with lift-up door on outboard side of box. Locate over L4/L5/L6 and R4/R5/R6.	$1,604
3310-0128	Pikepole/Ladder storage. Available on HP75 SideStacker with tall R1 only. The access door to match the rear body finish.	$585
3310-0129	Crosslay triple to hold 400' of 1.75" DJ (each) in two forward lays and up to 300' of 2.5" DJ in rear lay. Includes storage pan to rear of crosslays.	$3,324
3310-0130	Crosslay quad (2) 4.25" wide single stack to hold up to 200' of 2.0" DJ (each) and (2) 5.5" wide to hold up to 150'-200' 2.5" DJ (each). Includes storage pan to rear of crosslays	$4,200
3310-0138	Crosslay double (2) 4.25" wide single stack to hold up to 200' of 2.0" DJ (each). Includes storage pan to rear of crosslays	$2,449
3310-0139	Pikepole/Ladder storage. Holds (4) pike poles and (1) 10' attic with shoes. Available on HP100 platform only. The access doors to match the rear body finish.	$1,045
3310-0141	Body wheelwell compartments (4). Driver side forward, driver side rearward and officer side rearward approx 24" W x 6" H x 26" D. Officer side forward approx 48" W x 6" H x 26" D. All with drop down doors. Door material to match wheelwell finish. N/A wit	$2,075
3310-0149	Fixed diamond plate cover at front of hosebed approx 24" long	$521

3310-0151	Crosslay triple 7.5w x 23d (to 3x3) to hold up to 400' of 2.0" DJ (each). Includes storage pan to rear of crosslays.	$3,746
3310-0152	Crosslay dry storage. Includes 20"W storage area and storage pan to rear of crosslay.	$3,324
3310-0155	Body wheelwell compartments (2) above forward tandem approx 24" W x 6" H x 26" D with drop down doors. Door material to match wheelwell finish.	$716
3320-0009	SCBA Bottle Storage. (8) Cast Product SCBA bottle storage with gasketed doors. (4) each side in rear wheel well area.	$1,356
3320-0010	SCBA Bottle Storage. (4) Cast Product SCBA bottle storage doors. (2) each side in rear wheel well area. Each tube to include a ribbed rubber insert mounted to rear of tube.	$610
3320-0023	SCBA Storage. (6) Cast Product SCBA bottle storage with gasketed doors. (3) each side rear wheel well area located in center and rearward positions.	$1,018
3320-0025	SCBA Storage. (6) Cast Product SCBA bottle storage with gasketed doors. (4) Driver side rear wheel well area and (2) officer side (located either side of the rearward tandem wheel).	$1,018
3325-0003	E-ONE designed PTO driven HRT system, 10,500 PSI system, with 2 tool capability.	$29,744
3325-0004	XRT Hydraulic tool system with 2 tool capability. 10,500 PSI system. Includes selector vlv for each reel, hyd res / filter and remote cooler. Requires gen with XRT hyd pump.	$23,950
3330-0001	Slideout platform-integral driver side running board.	$1,281
3330-0002	Slideout platform-rollerless. Includes chrome grab handle centered on the frt face of the platform. Located [#LOC].	$1,240
3330-0003	Rear slideout platform - rollerless HP75 / HP78 SideStacker 36" wide located below hosebed. Includes a chrome grab handle centered on the frt face of the platform and a handrail below hosebed.	$928
3330-0004	Slideout platform-recessed rear. Located below hosebed. Includes a handrail below hosebed. Requires extended hosebed on HP100, CR100, and 92 Pltfrm SideStacker bodies.	$838
3330-0007	Folding Step. Location [#LOC]. Each location requires a minimum of (1) handrail per NFPA.	$117
3330-0008	Handrail 12". Location [#LOC].	$104
3330-0023	Slideout platform-integral officer side running board. Not available with a front suction.	$1,281
3330-0029	Intermediate pump panel step officer side with forward tapered corner. Includes (1) lower and (1) upper folding step with (1) handrail and (1) recessed step light located above the intermediate step. Step light to be switched thru work light in cab.	$866
3330-0030	Intermediate pump panel step officer side with forward tapered corner. Includes (2) lower and (1) upper folding step with (1) handrail and (1) recessed step light located above the intermediate step. Step light to be switched thru work light in cab.	$980
3330-0042	Hansen white LED body handrails upgrade package.	$1,243
3330-0059	Zico swing-out access ladder with 4 rungs on main ladder and 2 rungs on swing down ladder. Locate on right side of pump module offset to rear.	$1,783
3330-0072	Hansen red LED body handrails upgrade package.	$1,243
3330-0075	Slideout platform - SlideMaster. Location: [#LOC].	$1,637
3330-0079	Slideout platform-rollerless. Includes chrome grab handle centered on the front face of the platform (includes handrail as applicable for body mounted locations). Located [#LOC].	$835
3330-0094	A pair of 12" handrails shall be supplied. Locate 1 each side outboard of ladder on roof.	$208
3340-0015	Diamond plate single axle wheel well. Includes bolt-on composite wheel well liners and aluminum fenderettes.	$1,050
3340-0027	Diamond plate corner guards for the driver and officer front compartment face. Guards to wrap around the corner and be full height of side assembly.	$194
3340-0035	Divider Long. To run full length of hosebed (front to rear).	$462
3340-0036	Body compartment interiors to have a swirled finish. Includes pan of hinged door as applicable.	$1,977
3340-0052	Stainless steel trim on bottom edge of compartment opening of [#LOC]	$114
3340-0059	Recessed Fuel fills for dual fuel fill application. (1) each side in wheel well.	$234
3340-0067	Turtle Tile Brand [#COL] Floor Matting covering all applicable Compartment Floors, Shelves, and Rollout Trays.	$1,003
3340-0088	Smooth plate single axle wheel well painted job color. Includes bolt-on composite wheel well liners.	$1,523
3340-0089	Turtle Tile Brand [#COL] Floor Matting covering all applicable Compartment Floors, Shelves, and Rollout Trays.	$1,619
3340-0090	Turtle Tile Brand [#COL] Floor Matting covering all applicable Compartment Floors, Shelves, and Rollout Trays.	$2,205
3340-0093	Mud flaps, rear, black with E-ONE logo.	$151
3340-0107	Diamond plate tandem axle wheel well. Includes bolt-on composite wheel well liners and fenderettes.	$2,098
3340-0108	Smooth plate tandem axle wheel well painted job color. Includes bolt-on composite wheel well liners.	$3,043
3340-0109	Power Vent System located in [#LOC].	$181
3340-0111	Horizontal ladder bracket. Location and type of ladder: [#LOC].	$241
3340-0141	Label package for Memphis units only, to include labeling of removable panels to indicate what is behind.	$91
3340-0150	Dri-Dek brand [#COL] floor matting covering all applicable compartment floors, shelves, and rollout trays.	$936
3340-0151	Dri-Dek Brand [#COL] floor matting covering all applicable body compartment floors, shelves, and rollout trays.	$1,551
3340-0152	Dri-Dek brand [#COL] floor matting covering all applicable compartment floors, shelves, and rollout trays.	$2,139
3340-0158	Underbody Splash guard behind rear axle mounted to body	$495
3340-0176	Swirl plate single axle wheel well with clear coat finish. Includes bolt-on composite wheel well liners.	$1,614
3340-0187	Sign "Stay Back 150 Metres"with black reflective lettering. Locate below rear of body.	$123
3340-0200	Removable slat flooring. Location: [#LOC]	$251
3340-0203	Bracket Hooligan tool mount [#LOC]	$150
3340-0215	Divider Long. To run full length of hosebed (front to rear). Divider height to half of hosbed depth (top to bottom). For use with low hosebed configurations only.	$462
3340-0218	Sign "Stay Back 500FT". White plate with red reflective lettering. Locate low on rear of body / body doors.	$123
3340-0239	Recessed fuel fills for dual fuel fill applications. Fills located (1) each side top rear of tractor body.	$234
3340-0258	A deflector shield will be placed in front of the light tower or A/C system. Deflector will be in front of the forward most componet.	$875

3340-0264	License plate sized number plate. Locate in license plate bracket(s). Plate to be painted job color. Lettering and/or graphics not included.	$197
3340-0269	Diamond plate tandem axle wheel well. Includes bolt-on alum wheel well liners (un-painted) and fenderettes.	$2,594
3340-0272	Sign "Stay Back 500FT" with black reflective lettering. Locate B1 door above D-ring.	$123
3340-0277	Pass through in compartment ceiling for cord reel cable / hyd hose. For use with compts that have a ceiling spaced away from compt top. Loc: [#LOC]	$801
3340-0278	Diamond plate tandem axle wheel well. Includes bolt-on painted job color alum wheel well liners and fenderettes.	$3,024
3340-0281	Backboard storage compartment for (2) boards. [#LOC]. Includes retaining strap for boards.	$638
3340-0283	Horizontal ladder bracket. Location and type of ladder: [#LOC].	$241
3340-0286	Mounting bar for 36" long roll of sheet plastic. Includes "U" brackets on each end and quick release pins to hold bar to brackets. Bar to be up high in compt positioned for a 10" dia roll. Loc: [#LOC].	$509
3340-0287	Lip 2" high along lower compartment door opening just inside door. Loc: [#LOC].	$136
3340-0309	Sign "Keep Back 300FT". White plate with red reflective lettering. Locate on rear ladder access door.	$123
3340-0337	Hosebed divider with 45 degree offset to store customer required hose load. Rear section of divider approx. 94.5" to rear of offset and forward section of divider approx. 102.5" ahead of offset. HP75/78 only.	$683
3340-0358	Backboard storage sleeve for (1) board. 4"H x 20"W x 76"L. Includes (2) retaining straps, (1) each side for boards. Location: Horizontally mounted through L3/B1/R3.	$638
3350-0000	Hydraulic hose reel for use with Hurst brand tools. Includes 100' 1/4" hose (up to 5,000 PSI) and nylon roller unit (captive type) reel mounted. Location: [#LOC]. Hose Color [#COL].	$2,284
3350-0001	Air Reel w/electric rewind. 12V with 100' .25" hose plumbed to the truck air system. Location: [#LOC]	$2,511
3350-0004	Low Pressure Utility Air Hose Reel assembly with 250' low pressure air hose and mini panel. Locate in [#LOC].	$2,409
3350-0009	Hydraulic hose reel for use with TNT brand tools. Includes 100' 1/4" hose (up to 10,000 PSI) and nylon roller unit (captive type) reel mounted. Location: [#LOC]. Hose Color [#COL].	$4,590
3350-0010	Hydraulic hose reel for use with Phoenix brand tools. Includes 100' 1/4" hose (up to 5,000 PSI) and nylon roller unit (captive type) reel mounted. Location: [#LOC]. Hose Color [#COL].	$2,284
3350-0011	Hydraulic hose reel for use with Code 3 brand tools. Includes 100' 1/4" hose (up to 5,000 PSI) and nylon roller unit (captive type) reel mounted. Location: [#LOC]. Hose Color [#COL].	$2,284
3350-0012	Hydraulic hose reel for use with Amkus brand tools. Includes 100' 1/4" hose (up to 10,500 PSI) and nylon roller unit (captive type) reel mounted. Location: [#LOC]. Hose Color: [#COL].	$4,590
3350-0013	Hydraulic hose reel for use with Hurst Centaur brand tools. Includes 100' 1/4" hose (up to 10,000 PSI) and nylon roller unit (captive type) reel mounted. Location: [#LOC]. Hose Color [#COL].	$4,590
3350-0014	Hydraulic hose reel for use with Genesis brand tools. Includes 100' 1/4" hose (up to 10,000 PSI) and nylon roller unit (captive type) reel mounted. Location: [#LOC]. Hose Color [#COL].	$4,590
3350-0015	Hydraulic hose reel for use with Holmatro brand tools. Includes 100' 1/4" hose (up to 10,000 PSI) and nylon roller unit (captive type) reel mounted. Location: [#LOC]. Hose Color [#COL].	$4,590
3350-0016	12' Lead/Supply Line for high pressure hydraulic reel. To be used with 10,000 PSI hyd reels. Locate on reel in [#LOC].	$780
3350-0018	12' Lead/Supply Line for low pressure hydraulic reel. To be used with 5,000 PSI hyd reels. Locate [#LOC].	$625
3350-0025	Hydraulic hose reel for use with TNT brand tools. Includes 100' 1/4" rubber hose (up to 10,000 PSI) and nylon roller unit (captive type) reel mounted. Location: [#LOC]. Hose Color [#COL].	$4,590
3350-0026	Hydraulic hose reel for use with Amkus brand tools. Includes 100' 1/4" rubber hose (up to 10,500 PSI) and nylon roller unit (captive type) reel mounted. Location: [#LOC]. Hose Color: [#COL].	$4,590
3350-0029	Route hydraulic lead line(s) to [#LOC].	$91
3350-0030	Low pressure utility air hose reel w/spring rewind. Includes 50' 3/8" low pressure air hose, rollers, ball stop and and shut-off valve accessible from ground. Loc: [#LOC]	$1,263
3350-0032	Akron utility air hose reel. Includes 200' 3/8" hose and reel mounted nylon roller unit (captive type). Loc: [#LOC].	$1,342
3350-0033	Akron hydraulic hose reel for use with Hurst brand tools. Includes 100' 1/4" hose (up to 5,000 PSI) and reel mounted nylon roller unit (captive type). Location: [#LOC]. Hose Color: [#COL].	$2,123
3350-0034	Hydraulic hose reel for use with Holmatro Core Technology tools. Reel model EF2220-17-18 w/ 100' of CORE hydraulic hose and a 30' CORE Holmatro pigtail. Location: [#LOC]. Hose Color [#COL].	$7,272
3350-0036	Hydraulic hose reel for use with Hurst Centaur brand tools. Includes 150' 1/4" hose (up to 10,000 PSI) and nylon roller unit (captive type) reel mounted. Location [#LOC]. Hose Color [#COL].	$5,590
3350-0040	12' Lead/Supply Line for high pressure hydraulic reel. To be used with 10,500 PSI hyd reels. Locate on reel in [#LOC].	$819
3350-0041	30' Lead/Supply Line for high pressure hydraulic reel. To be used with 10,500 PSI hyd reels. Locate [#LOC].	$1,218
3350-0043	Akron hydraulic hose reel for use with Amkus brand tools. Includes 100' 1/4" hose (up to 10,500 PSI) and reel mounted nylon roller unit (captive type). Location: [#LOC]. Hose Color: [#COL].	$3,277
3350-0045	Akron reel to be powder painted custom color. Requires approval from vendor on color. Location: [#LOC]. Reel Color: [#COL].	$114
3350-0046	8' Lead/Supply Line for high pressure hydraulic reel. To be used with hyrdraulic reels between 10,000 to 10,500 PSI. Locate: [#LOC].	$379
3350-0047	6' Lead/Supply Line for high pressure hydraulic reel. To be used with 10,500 PSI hyd reels. Locate on reel in [#LOC].	$769
3350-0048	Low Pressure Utility Air Hose Reel assembly with 250' low pressure air hose. Locate in [#LOC].	$1,809
3365-0011	Floor mounted roll-out tray. Includes 250lbs. tray capacity. Mount on [#LOC] floor.	$616
3365-0014	Dual ladder tunnel for HP75 / HP78 SideStacker. Ladder rack to hold: [#LOC]	$4,848
3365-0015	Dual ladder tunnel for HP75 / HP78. Ladder rack to hold: [#LOC]	$4,848
3365-0016	Box type enclosure for forward end of ladder tunnel. Required on center HB HP75 / HP78 with ladder tunnel doors.	$410
3365-0036	Center mounted ladder tunnel. Ladder rack to hold: [#LOC]	$4,848
3365-0039	Center mounted ladder tunnel. Ladder rack to hold: [#LOC]	$4,848
3365-0076	Center mounted ladder tunnel. Ladder rack to hold: [#LOC]	$4,848

3365-0117	Storage rack (4) 8" x 64" aluminum tubes. Locate ceiling mtd in L1/R1 transverse compartment centered side to side offset to front.	$1,045
3365-0127	Storage box in ladder tunnel for tripod 10 wide x 10 high x 106 long.	$939
3365-0131	Stokes basket storage rack approx 9"H x 25"W x 86"L with open ends. Includes nylon strap on each end to retain stokes. Also includes (6) pile pole tubes equally spaced below stokes rack. Position retaining slots so they alternate facing the left and right	$965
3365-0132	Fire extinguisher storage rack to hold (3) extinguishers in a single horz row. Bottom and sides to include ribbed rubber inserts. Each opening to have a vertically mounted strap. Locate floor mtd in [#LOC].	$622
3365-0167	Dual ladder tunnel for HP75 / HP78 SideStacker with tall R1 compartment. Ladder rack to hold: [#LOC]	$4,848
3370-0023	Tracks for adjustable shelf and/or adjustable tray in single depth or rescue style single depth compartment. Location: [#LOC].	$174
3370-0025	Permanent shelf. Locate in [#LOC].	$90
3370-0026	Adjustable shelf. For compartments that are full height/full depth or lower compartments with full depth. Location: [#LOC].	$225
3370-0027	Tracks for adjustable shelf and/or adjustable tray in the lower area of the compartment. Location: [#LOC].	$88
3370-0028	Tracks for adjustable shelf and/or adjustable tray in the upper area of the compartment. Location: [#LOC].	$46
3370-0029	Adjustable shelf. For compartments with upper shallow depth. Location: [#LOC].	$114
3370-0031	Storage system for compartment L1. Includes vertical partition 24" from right side wall, (2) adj. tool boards to rear of partition, roll-out tray w/24" 250# slides on floor ahead of partition & fixed shelf at the top of the rear wall offset ahead of parti	$2,386
3370-0038	Adjustable shelf. For lower area of compartments with multiple depths. Location: [#LOC].	$225
3370-0039	Adjustable shelf. For upper area of compartments with multiple depths. Location: [#LOC].	$225
3370-0040	Adjustable shelf for single depth or rescue style single depth compartment. Location: [#LOC].	$225
3370-0042	Tracks for adjustable shelf and/or adjustable tray in transverse compartment. Location: L1/R1.	$345
3370-0049	Tracks for adjustable shelf and/or adjustable tray in transverse compartment. Location: L4/R4.	$345
3370-0051	Tracks for adjustable shelf and/or adjustable tray in 1/2 or 2/3rds depth of transverse compartment. Location: [#LOC].	$261
3370-0052	Adjustable shelf. For non-transverse compartments that are 16" or greater in depth. Location: [#LOC].	$225
3370-0053	Adjustable shelf. For non-transverse compartments that are up to 15.99" deep. Location: [#LOC].	$114
3370-0054	Tracks for adjustable shelf and/or adjustable tray in compartments 16" or greater in depth. Location: [#LOC].	$174
3370-0055	Tracks for adjustable shelf in shallow compartments up to 15.99" deep. Location: [#LOC].	$88
3380-0014	Roll-out generator tray. Includes tray interlock. Locate [#LOC].	$734
3380-0015	Fixed back wall mounted toolboard. Toolboard to be spaced off wall a half inch. Location(s): [#LOC]	$202
3380-0017	Floor mounted roll-out/tilt down tray. Mount on [#LOC] floor. For use on single depth or rescue style compartment trays.	$1,034
3380-0018	Adjustable tool board. Includes upper and lower adjustable track and gas shock actuated. Tool board sized to compartment height and depth as applicable. Location(s): [#LOC]	$759
3380-0019	Running board suction tray. Includes removable slats in bottom of tray. Location(s): [#LOC]	$483
3380-0022	Floor mounted roll-out tray. Includes 500lbs. tray capacity. Location: [#LOC].	$804
3380-0023	Adjustable mounted roll-out/tilt down tray. Location(s): [#LOC]. For use on single depth or rescue style compartment trays.	$1,306
3380-0024	Adjustable mounted roll-out tray. Includes 250 lbs tray capacity. Location(s): [#LOC]	$886
3380-0025	Adjustable mounted roll-out tray. Includes 500 lbs tray capacity. Location(s): [#LOC]	$1,076
3380-0027	Floor mounted Slide Master with tray. Model SM3-SP. Single depth. Mount on [#LOC] floor.	$828
3380-0028	Adjustable mounted Slide Master with tray. Model SM3-SP. Single depth. Location(s): [#LOC]	$1,098
3380-0029	Floor mounted bi-directional Slide Master with tray. Model SM2-D-SP. Mounted on [#LOC].	$1,427
3380-0038	Floor mounted roll-out tray with Jonathan Slides. Includes 400lbs. tray capacity. Mount on [#LOC] floor.	$1,408
3380-0039	Adjustable mounted roll-out tray with Jonathan Slides. Includes 400 lbs tray capacity. Location(s): [#LOC]	$1,678
3380-0049	Running board suction tray (floating style). Includes tapered 3" front corner and removable slats in bottom of tray. Location(s): [#LOC]	$627
3380-0055	Floor mounted roll-out/tilt down tray with aluminum frame. Mount on [#LOC] floor.	$1,006
3380-0056	Adjustable mounted roll-out/tilt down tray with aluminum frame. Location(s): [#LOC]	$1,276
3380-0060	Adjustable tool board with 500 lbs slides. Includes upper and lower adjustable track and gas shock actuated. Tool board sized to compartment height and depth as applicable. Location(s): [#LOC].	$1,044
3380-0062	Adjustable peg tool board. Includes upper and lower adjustable track and gas shock actuated. Tool board sized to compartment height and depth as applicable. Location(s): [#LOC].	$912
3380-0063	Ready Respond Storage cabinet. Includes (5) drawers with gray fronts. No side trim required. Locate floor mounted in [#LOC].	$3,745
3380-0068	Floor mounted equally sized roll-out trays (PR). Includes 250lbs. tray capacity. Mount on [#LOC] floor.	$1,230
3380-0069	Adjustable tool board - notched. Includes upper and lower adjustable track and gas shock actuated. Tool board sized to compartment height and depth as applicable. Upper end to be notched around compartment offset to provide maximum height. Location(s): [#	$869
3380-0070	(2) Rollout Trays with 500lb slides approx. 27"W x 44"D to be floor mounted, one each side on upper transverse floor offset forward in L1/R1.	$1,111
3380-0071	Tool board on dual direction 1000 lb SlideMaster. Includes lock-in/lock-out. Tool board sized to compartment height and depth as applicable. Location(s): [#LOC]	$2,048
3380-0074	Tool board HD adjustable. Includes return style re-enforcing bends on vertical front and rear edges of tool board, upper and lower adjustable track and gas shock actuated. Tool board sized to compartment height and depth as applicable. Location(s): [#LOC]	$811
3380-0076	Floor mounted roll-out tray with 500lbs capacity. Mount on [#LOC] floor.	$616
3380-0077	Adjustable roll-out tray with 500 lbs capacity. Location(s): [#LOC]	$886
3380-0079	Adjustable heavy duty tool board. Includes return style re-enforcing bends on vertical front and rear edges of tool board, upper and lower adjustable track and gas shock actuated. Tool board sized to compartment height and depth as applicable. Location(s)	$811

3380-0080	Adjustable heavy duty peg tool board. Includes return style re-enforcing bends on vertical front and rear edges of tool board, upper and lower adjustable track and gas shock actuated. Tool board sized to compartment height and depth as applicable. Locatio	$964
3380-0081	Roll-out generator tray. Includes tray interlock. Locate [#LOC].	$734
3380-0082	Slidemaster frame powder coated black (EA). Location: [#LOC].	$140
3380-0087	Adjustable tool board with 500 lbs slides for use with deep compartments. Includes upper and lower adjustable track with lock in / lock out latch. Tool board sized to compartment height and depth as applicable. Location(s): [#LOC].	$1,044
3380-0093	Floor mounted roll-out/tilt down tray. Mount on [#LOC] floor. For use on half transverse trays.	$1,034
3380-0094	Floor mounted roll-out/tilt down tray. Mount on [#LOC] floor. For use on two thirds transverse trays or in the B1above the frame rails.	$1,034
3380-0095	Adjustable mounted roll-out/tilt down tray. Location(s): [#LOC]. For use on half transverse trays.	$1,306
3380-0096	Adjustable mounted roll-out/tilt down tray. Location(s): [#LOC]. For use on two thirds transverse trays or B1above the frame rails.	$1,306
3390-0041	Compartment R1 to have the following: (1) vertical partition located 24" off rearward wall and (1) adjustable shelf with adjustable tracking forward area of partition.	$590
3390-0053	Lower rear compt to have two vertical dividers creating three storage areas approx 8.25" W x 7.25" H x 96"L with .375 polyethyene on floor of each area.	$874
3390-0056	Storage system for compartment L1. Includes vertical partition centered from side to side, (2) adj. tool boards to rear of partition, (1) adj. shelf ahead of partition in lower section. HP75 / HP78 SideStacker.	$2,029
3390-0057	Storage system for compartment R1. Includes vertical partition centered from side to side, (1) floor mounted roll-out tray w/24" 500# slides ahead of partition, (1) adj. shelf rearward of partition. HP75 / HP78 SideStacker.	$1,318
3390-0058	Storage system for compartment L1. Includes vertical partition 24" from right side wall, (2) adj. tool peg boards to rear of partition, adj shelf lower ahead of partition & fixed shelf at the top of the rear wall offset ahead of partition. HP75 / HP78 Sid	$2,390
3390-0061	Storage system for compartment L1; Vertical partition 12" from right side wall, (1) adj. tool board to rear of partition & (2) adj shelves ahead of partition in lower section. HP75 / HP78 SideStacker	$1,492
3390-0064	Compartment R4 to have the following storage package. (1) full height vertical partition at rear wall offset and the following located forward of the partition: (1) adjustable shelf in upper area, (1) permanent shelf at offset and (1) floor mntd roll-out	$1,252
3390-0065	Compartment L4 to have the following storage package. (1) full height vertical partition at rear wall offset and the following located forward of the partition: (1) adjustable shelf in upper area, (1) permanent shelf at offset, (1) adjustable roll-out tra	$2,032
3390-0066	Compt L-1 to have the following storage package. (1) Vertical partition just rearward of breaker box full height. (1) permanent shelf at offset rearward of vertical partition. (1) Adjustable shelf in upper area rearward of vertical partition. (1) Adjustab	$2,122
3390-0069	Compartment L3 to have the following: (1) vertical partition located 30" from forward wall and (2) adjustable shelves with adjustable tracking forward and rearward area of partition.	$1,273
3390-0072	Compartment storage package to include (1) vertical partition to rear of reel and (1) adjustable shelf to rear of partition. Location: Driver and officer side compartments over forward tandem.	$1,194
3390-0075	Storage system for compt L-1. Includes (2) vertical partitions (1) 26" from right side wall and (1) 12" ahead of full height partition from fixed shelf to floor, (2) Adj pull-out toolboards rearward of full height partition, (1) Fixed shelf at offset forw	$3,340
3390-0076	Compartment L4 to have the following storage package. (1) full height vertical partition at rear wall offset and the following located forward of the partition: (1) permanent shelf at offset and (1) floor mntd roll-out tray w/250lb slides.	$907
3390-0077	Compartment L1 to have the following storage package. (1) permanent shelf at offset, (1) vertical partition 20" off rear wall below permanent shelf and the following located forward of the partition: (1) adjustable shelf and (1) floor mntd roll-out tray w	$1,218
3390-0078	Compartment R4 to have the following storage package. (1) full height vertical partition at rear wall offset and the following located forward of the partition: (1) adjustable shelf in upper area, (1) permanent shelf at offset and (1) floor mntd roll-out	$1,065
3390-0085	Storage system for compartment R3. Includes (1) adj. tool board in frt half of compt.and roll-out tray w/24" 250# slides on floor in rear half of compartment.	$1,373
3390-0087	Storage system for Tiller transverse compt L2/R2. Includes 9W x 26H x 88D stokes rack against rear wall, air bag rack with (6) 2w x 24H x 24D slots on left side upper transverse floor offset forward and (2) adj shelves on right side ahead of stokes rack f	$2,619
3390-0094	Storage system for Tiller transverse compt L3/R3. Includes: (2) adjustable SlideMaster roll-out trays in the upper center of the transverse only. Each tray to be approx. 28" deep x max width.	$2,734
3390-0104	Compartment L1/R1 transverse to have the following storage package: (3) vertically stacked horizontal boxes on R1 forward wall; (1) approx. 8"W x 13"H x 60"D lower, (1) approx. 8"W x 8"H x 60"D middle and upper. Each box supplied with nylatron on floor. (	$3,001
3390-0105	Compartment L3 to have the following storage package: (1) vertical partition 24" off forward wall and the following located forward of the partition: (2) adjustable shelves. Rearward of partition: (2) adjustable tool boards.	$2,343
3390-0107	Compartment [#LOC] to have the following: (1) permanent shelf located at compartment break with (1) vertical partition located 12" off rearward wall mounted to bottom of permanent shelf. The following located forward of the partition: (1) floor mntd roll-	$3,494
3390-0108	Compartment L5 to have the following storage package. (1) permanent shelf located at upper offset, (2) vertical partitions; (1) front and (1) rear at offsets and (1) adjustable shelf between vertical partitions.	$656
3390-0109	Compartment [#LOC] to have the following storage package: (1) vertical partition 17" off rearward wall and the following located forward of the partition: (1) floor mntd roll-out tray w/250lb slds and (2) adjustable shelves. Rearward of partition: (1) adj	$2,202

3390-0119	Storage system for compartment L1. Includes (1) floor mounted tray 500#, (1) permanent shelf at offset, (1) vertical partition approx 15" off forward wall upper area, (1) Adjustable shelf rearward of vertical partition. HP75 / HP78 SideStacker	$1,368
3390-0125	Compartment L5 to have the following storage package. (1) permanent shelf located at upper offset, (1) vertical partition at front offset and (1) adjustable shelf rear of vertical partition.	$566
3390-0126	Compartment R2 to have the following storage package: (1) permanent shelf at offset, (1) vertical partition centered off forward wall and the following located forward of the partition: (1) adjustable tool board. Rearward of partition: (2) adjustable shel	$1,446
3390-0127	Compartment [#LOC] to have the following storage package: (1) vertical partition 24" off forward wall and the following located rearward of the partition: (1) adjustable shelf.	$514
3390-0133	Compartment L2 to have the following storage package: (1) vertical partition 24" off forward wall and the following located forward of the partition: (2) adjustable shelves. Rearward of partition: (2) adjustable peg tool boards.	$2,414
4000	**Pumps/Tanks**	
4000-0036	Stainless Steel Victaulics for all Discharge and Intake plumbing	$3,831
4005-0012	Hale 8FGR 1500-2000 GPM Pump single stage	$39,635
4005-0013	Hale QFLO 750-1250 GPM Pump single stage	$27,540
4005-0014	Hale QMID 1250 GPM single stage Pump	$28,994
4005-0015	Hale QMAX 1000-1250 GPM single stage Pump	$33,671
4005-0016	Hale QMAX 1500-2250 GPM single stage Pump	$33,851
4005-0017	Hale QTWO 1000-1250 GPM two stage Pump	$32,681
4005-0018	Hale QTWO 1500-2000 GPM two stage Pump	$33,552
4005-0019	Waterous CS 750-1250 single stage Pump	$29,313
4005-0020	Waterous CM 750-1250 two stage Pump	$31,164
4005-0021	Waterous CSU 1500-2250 GPM single stage Pump	$35,858
4005-0022	Waterous CMU 1500-2250 GPM two stage Pump	$38,885
4005-0036	Extended Hale Pump 1 Year Warranty in addition to the standard 2 year warranty.	$673
4005-0037	Extended Hale Pump 2 Year Warranty in addition to the standard 2 year warranty.	$1,296
4005-0038	Extended Hale Pump 3 Year Warranty in addition to the standard 2 year warranty.	$1,916
4005-0039	Extended Waterous Pump 3 Year Warranty in addition to the standard 2 year warranty.	$1,630
4005-0052	Hale QMAX 1500-2250 GPM single stage Pump with K Gear Box	$36,843
4005-0057	Hale DSD Pump 750/1500 GPM single stage	$29,235
4005-0060	Hale HPX300 BD26 Hale Portable Pump mounted in pan. W/Remote controls in Cab. Hook up to Chassis Fuel System.	$18,887
4005-0063	Hale QFLO Plus 750-1250 GPM Pump single stage	$39,794
4005-0079	Hale DSD Pump 750/1500 GPM single stage	$25,599
4010-0030	300 gallon "T" water tank.	$4,691
4010-0031	400 gallon "T" water tank.	$6,037
4010-0032	450 gallon "T" water tank.	$6,314
4010-0033	500 gallon "T" water tank.	$6,592
4010-0047	280 gallon "T" water tank. Includes sleeve for ladder tunnel.	$5,829
4010-0048	250 gallon "T" water tank. Includes sleeve for ladder tunnel.	$5,829
4010-0049	490 gallon "T" water tank. Includes sleeve for ladder tunnel.	$7,730
4010-0050	480 gallon "T" water tank. Includes sleeve for ladder tunnel.	$7,730
4010-0051	475 gallon "T" water tank. Includes sleeve for ladder tunnel.	$7,730
4010-0052	450 gallon "T" water tank. Includes sleeve for ladder tunnel.	$7,730
4010-0053	430 gallon "T" water tank. Includes sleeve for ladder tunnel.	$7,730
4015-0002	Mechanical Speed Counter for Hale Pumps	$293
4015-0007	Pump Cooler	$152
4015-0008	Zinc Anodes for Hale Pump - (Pair) (1) Discharge side and (1) Intake Side	$296
4015-0012	Pump Shift Override - side panel mounted	$681
4015-0013	Fire Research ThrottleXcel engine throttle. Includes engine gauges.	$1,456
4015-0014	Valve Relief Thermal - Hale TRV120	$761
4015-0015	Valve Relief System - TPM Hale	$3,409
4015-0016	Valve Relief Thermal - Hale TRVL-120	$1,379
4015-0018	Valve Inlet MIV-E - Hale. Location: [#LOC]	$3,156
4015-0019	Valve Inlet MIV-M -Hale. Location: [#LOC]	$2,707
4015-0020	Valve Monarch Manual - Waterous. Location: [#LOC]	$4,056
4015-0021	Valve Monarch Air Actuated - Waterous. Location: [#LOC]	$5,028
4015-0022	Pump Seal Mechanical - Hale	$696
4015-0026	Electronic Speed Counter for Waterous Pumps	$289
4015-0029	Hale Pressure Relief Valve	$1,194
4015-0030	Waterous Pressure Relief Valve	$1,336
4015-0031	Valve Relief System - Dual TPM Required for 2250gpm Pumps	$4,035
4015-0033	Hale 2-Stage Power Operated Transfer Valve	$1,582
4015-0035	Waterous 2-Stage Electronic Transfer Valve	$1,337
4015-0036	6" Additional Intake for 2250gpm Pump	$1,825
4015-0037	Engine Throttle Venier	$331
4015-0039	Pump Seal Mechanical for Waterous Pump	$654
4015-0041	Valve Monarch Electric - Waterous. Location: [#LOC]	$5,146
4015-0042	Waterous Overheat Protection Manager	$982
4015-0043	Anodes for Hale Cafspro Pump - (Pair) (1) Discharge side and (2) Intake Side	$444
4015-0044	Anodes for Waterous Pump - (Pair) (1) Discharge side and (1) Intake Side	$357
4015-0045	Throttle Selection Switch on Pump Operator's Panel for Backup Relief and Throttle System.	$503
4015-0046	Hale Pump Shift Override	$1,086

4015-0047	Additonal Hale Primer Valve Located: [#LOC]	$558
4015-0048	Pump Shift Override - driver's side under runningboard forward of runningboard tray if applicable.	$681
4015-0049	Extend Fire Pump Grease Zerks to Operator's Panel	$391
4015-0050	Relocate Primer to the Outside of the Frame Rail on Driver's Side	$85
4015-0051	Two 4.5" Steamers for Hale Qflo Pump	$695
4015-0054	Additonal Waterous Primer Located: [#LOC]	$1,252
4015-0062	Primer indicator light shall be provided on the pump operator's panel, color to be red.	$105
4015-0063	TPM Relief Valve outlet to be extended to the side of truck under runningboard	$261
4015-0064	Hale Auto Fill/Thief Inlet 2.5" Tank Fill "AutoFill" Automatic Tank Fill Valve Location: [#LOC].	$4,019
4015-0065	Schedule 40 Stainless steel piping	$1,109
4015-0066	Trident Pump Primer W/3 Barrel Push Botton Control.	$993
4015-0068	6" Intake Valve Akron Electric with Releif. Location: [#LOC]	$3,351
4015-0070	WATEROUS OIL PRIMER	$65
4015-0071	Valve Relief Thermal - Hale TRVL-120 W/Audible Alarm	$1,393
4015-0072	6" Intake Valve Elkhart Electric UBEC1 Control with Releif. Location: [#LOC]	$3,351
4015-0074	Manual remote operated master pump drain. The master drain control shall be clearly marked and placed in accessible location on driver side pump panel.	$298
4015-0080	6" Cap Vented "IPOS"	$14
4015-0081	Hale Semi-Automatic Priming push-button control.	$463
4015-0082	Electric Over Air Actaution Pump Cooler Valve	$402
4015-0083	Electric Over Air Actaution Engine Cooler Valve	$258
4015-0084	Pump Air Blow Out with 1/4 Snubber Vavlve.	$230
4015-0085	Auto Tank to Pump Operation. When Switched to Automatic Mode, The Tank Valve will Close When Suction Pressure Reaches 15 PSI & Opens When Suction PressureI Drops Below 15 PSI.	$1,706
4015-0086	Pump Cooler 1/4 Turn Valve	$241
4015-0087	Engine Cooler 1/4 Turn Valve	$241
4015-0088	Portable/Qmax Pump Shall be with Manifold and check valves for Front Bumper Turret and Ground Sweep. To be use dearing Pump&Roll operation.	$833
4015-0090	Akron Test Port for Master Gauges	$87
4015-0091	Pump Cooler with .75 1/4 turn valve.	$273
4015-0092	Hale Fill Thieft Steamers to be Flush + 2 Location [#LOC]	$1,474
4020-0001	Additional Tank Sump	$293
4100-0000	10 gallon integral foam tank for [#LOC]. Foam tank capacity will reduce the water tank capacity.	$888
4100-0008	20 gallon integral foam tank for [#LOC]. Foam tank capacity will reduce the water tank capacity.	$955
4100-0009	30 gallon integral foam tank for [#LOC]. Foam tank capacity will reduce the water tank capacity. Tank capacity is 30 US gallon / 25 Imperial gallons.	$1,035
4110-0002	Foam tank (B) outlet. Includes 1" male adaptor and connector (ship loose). Outlet location: [#LOC]	$879
4110-0004	Foam tank shutoff. 1/4 turn shut off on each connection to the foam tank - foam discharge, refill and sending unit. The Valves shall be located at the tank.	$687
4405-0021	Booster reel - front bumper. Center between frame rails. Will hold 100' of 1" or 150' of 3/4" booster hose.	$5,795
4405-0026	Booster Reel shall hold 100' of 1" Hose installed in [#LOC]	$2,483
4405-0053	One (1) booster reel to hold 200` of .75" hose (not included)shall be provided. Includes rollers mounted on compartment door and foot mounted rewind switch below forward area of compartment. Locate R2.	$3,119
4405-0056	Booster reel to hold up to 200' of .75" hose. Locate over L1 on compartment top offset forward.	$3,065
4405-0060	Booster reel Akron Elect valve with a 9315 controller to read pressure only- Behind Front of Cab. Center between frame rails. To hold 100' of 1"	$5,995
4405-0061	Akron Booster reel - front bumper. Center between frame rails. Will hold 150' of 1" or 250' of 3/4" booster hose.	$6,195
4415-0008	1.5" Front Bumper Discharge Akron Manual Valve	$1,447
4415-0009	1.5" Front Bumper Discharge Hale Manual Valve	$1,543
4415-0010	1.5" Front Bumper Discharge Akron Electric Valve	$2,985
4415-0011	2.5" Front Bumper Discharge Akron Electric Valve	$3,132
4415-0012	1.5" Crosslay with Akron Manual Valve; Location: [#LOC]	$900
4415-0014	2.5" Left Pump Panel Discharge Akron Manual Valve. Location: [#LOC]	$937
4415-0015	2.5" Left Panel Discharge Hale Manual Valve. Location: [#LOC]	$1,220
4415-0016	2.5" Right Pump Panel Discharge Akron Manual Valve. Location: [#LOC]	$1,042
4415-0017	2.5" Right Pump Panel Discharge Hale Manual Valve. Location: [#LOC]	$1,323
4415-0018	2.5" Left Front Hosebed Discharge Akron Manual Valve	$1,355
4415-0019	2.5" Left Front Hosebed Discharge Hale Manual Valve	$1,584
4415-0028	2.5" Right Rear Discharge Akron Manual Valve Location: [#LOC]	$1,096
4415-0029	2.5" Right Rear Discharge Hale Manual Valve Location: [#LOC]	$1,323
4415-0034	3" Right Pump Panel Discharge Akron Manual Valve Location: [#LOC]	$1,506
4415-0035	3" Right Pump Panel Discharge Hale Manual Valve Location: [#LOC]	$1,848
4415-0036	3" Left Front Hosebed Discharge Akron Manual Valve	$1,969
4415-0037	3" Right Front Hosebed Discharge Akron Manual Valve	$1,969
4415-0041	3" Deck Gun Discharge Akron Manual Valve	$1,537
4415-0049	4" Pump Panel Discharge Hale Electric Valve Location: [#LOC]	$5,315
4415-0050	4" Pump Panel Discharge Akron Electric Valve (Waterous pumps noted location to be forward lower port). [#LOC]	$4,307
4415-0051	4" Waterway Discharge with 3" Akron Manual Valve	$2,089
4415-0052	4" Waterway Discharge with 4" Akron Electric Valve	$4,308
4415-0053	4" Waterway Discharge with 3" Akron Electric Valve	$3,601
4415-0054	4" Right Pump Panel Discharge with 3" Akron Manual Valve Location: [#LOC]	$1,772
4415-0057	5" Right Pump Panel Discharge with 3" Akron Manual Valve Location: [#LOC]	$2,458
4415-0058	2.5" Crosslay Akron Manual Valve. To be located rearward of 1.5" crosslay(s) if applicable. Location: [#LOC]	$1,085
4415-0067	1.5" Left Front Hosebed Preconnect Akron Manual Valve	$937

4415-0072	1.5" Right Rear Discharge Akron Manual Valve Location: [#LOC]	$989
4415-0085	1.5" Crosslay w/2" Akron Electric Valve Location: [#LOC]	$2,626
4415-0086	2.5" Crosslay w/Akron Electric Valve. To be located rearward of 1.5" crosslay(s) if applicable. Location: [#LOC]	$3,019
4415-0088	1.5" Crosslay w/2" Akron Electric Valve & Navigator 9305 Location: [#LOC]	$4,915
4415-0089	2.5" Crosslay w/Akron Electric Valve & Navigator 9305. To be located rearward of 1.5" crosslay(s) if applicable. Location: [#LOC]	$5,709
4415-0099	3" Deck Gun Discharge Akron Electric Valve	$3,540
4415-0100	3" Deck Gun Discharge Akron Electric Valve & Navigator 9305	$6,301
4415-0102	1.5" Front Bumper Discharge Akron Electric Valve & Navigator 9305	$5,484
4415-0104	2.5" Front Bumper Discharge Akron Electric Valve & Navigator 9305	$6,367
4415-0106	1.5" Left Front Hosebed w/2" Akron Electric Valve	$2,685
4415-0107	2.5" Left Front Hosebed Akron Electric Valve	$3,293
4415-0109	1.5" Left Front Hosebed w/2" Akron Electric Valve & Navigator 9305	$4,974
4415-0110	2.5" Left Front Hosebed Akron Electric Valve & Navigator 9305	$6,058
4415-0124	2.5" Left Pump Panel Discharge Akron Electric Valve. Location: [#LOC]	$2,874
4415-0125	2.5" Left Pump Panel Discharge Akron Electric Valve & Navigator 9305. Location: [#LOC]	$5,641
4415-0127	2.5" Right Pump Panel Discharge Akron Electric Valve Location: [#LOC]	$2,874
4415-0128	3" Right Pump Panel Discharge Akron Electric Valve Location: [#LOC]	$3,513
4415-0129	4" Right Pump Panel Discharge w/3" Akron Electric Valve Location: [#LOC]	$3,778
4415-0130	5" Right Pump Panel Discharge w/3" Akron Electric Valve Location: [#LOC]	$4,462
4415-0131	2.5" Right Pump Panel Discharge Akron Electric Valve & Navigator 9305 Location: [#LOC]	$5,641
4415-0132	3" Right Pump Panel Discharge Akron Electric Valve & Navigator 9305 Location: [#LOC]	$6,269
4415-0133	4" Pump Panel Discharge Akron Electric Valve & Navigator 9305 Location: [#LOC]	$7,607
4415-0134	4" Right Pump Panel Discharge w/3" Akron Electric Valve & Navigator 9305 Location: [#LOC]	$6,536
4415-0135	5" Right Pump Panel Discharge w/3" Akron Electric Valve & Navigator 9305 Location: [#LOC]	$7,222
4415-0149	1.5" Right Rear Discharge Akron Electric Valve Location: [#LOC]	$2,738
4415-0150	2.5" Right Rear Discharge Akron Electric Valve Location: [#LOC]	$3,034
4415-0152	1.5" Right Rear Discharge Akron Electric Valve & Navigator 9305 Location: [#LOC]	$5,028
4415-0153	2.5" Right Rear Discharge Akron Electric Valve & Navigator 9305 Location: [#LOC]	$5,799
4415-0161	2.5" Left Panel Discharge Akron Manual Valve w/30 Degree Droop Location: [#LOC]	$1,178
4415-0162	2.5" Left Panel Discharge Akron Electric Valve w/30 Degree Droop Location: [#LOC]	$3,117
4415-0163	2.5" Left Panel Dishcarge Akron Electric Valve & Navigator 9305 w/30 Degree Droop Location: [#LOC]	$5,883
4415-0164	2.5" Right Panel Discharge Akron Manual Valve w/30 Degree Droop Location: [#LOC]	$1,178
4415-0165	3" Right Panel Discharge Akron Manual Valve w/30 Degree Droop Location: [#LOC]	$1,800
4415-0166	2.5" Right Panel Discharge Akron Electric Valve w/30 Degree Droop Location: [#LOC]	$3,117
4415-0167	3" Right Panel Discharge Akron Electric Valve w/30 Degree Droop Location: [#LOC]	$3,804
4415-0168	2.5" Right Panel Discharge Akron Electric Valve & Navigator 9305 w/30 Degree Droop Location: [#LOC]	$5,883
4415-0169	3" Right Panel Discharge Akron Electric Valve & Navigator 9305 w/30 Degree Droop Location: [#LOC]	$6,564
4415-0171	3" Auxillary Waterway Discharge Akron Manual Valve. Plumbed from foam manifold and "Y" into w/way pipe downstream from main w/way discharge valve.	$1,120
4415-0172	2.5" Auxillary Waterway Discharge Akron Manual Valve. Plumbed from foam manifold and "Y" into w/way pipe downstream from main w/way discharge valve.	$1,054
4415-0179	2.5" Auxiliary Deck Gun Discharge Akron Valve for use with CAFS System	$1,826
4415-0180	2.5" Auxillary Waterway Discharge Hale Manual Valve. Plumbed from foam manifold and "Y" into w/way pipe downstream from main w/way discharge valve.	$1,289
4415-0181	3" Auxillary waterway discharge Hale Manual Valve. Plumbed from foam manifold and "Y" into w/way pipe downstream from main w/way discharge valve.	$1,313
4415-0184	3" Deck Gun Discharge Hale Manual Valve	$1,725
4415-0187	1.5" Crosslay with Hale Manual Valve Location: [#LOC]	$1,734
4415-0189	2.5" Crosslay with Hale Manual Valve Location: [#LOC]	$2,339
4415-0192	4" Waterway Discharge with 3" Hale Manual Valve	$2,435
4415-0194	2.5" Front Bumper Discharge Akron Manual Valve	$1,662
4415-0195	4" Right Pump Panel Discharge with 3" Hale Manual Valve Location: [#LOC]	$2,116
4415-0196	5" Right Pump Panel Discharge with 3" Hale Manual Valve Location: [#LOC]	$2,803
4415-0197	2.5" Left Panel Discharge Hale Manual Valve with Droop. Location: [#LOC]	$1,459
4415-0198	2.5" Right Pump Panel Discharge Hale Manual Valve with droop. Location: [#LOC]	$1,561
4415-0199	3" Right Pump Panel Discharge Hale Manual Valve with Droop Location: [#LOC]	$2,136
4415-0204	1.5" Crosslay with Hale Electric Valve Location: [#LOC]	$3,128
4415-0205	2.5" Crosslay with Hale Electric Valve Location: [#LOC]	$3,857
4415-0209	3" Deck Gun Discharge Hale Electric Valve	$3,810
4415-0210	2.5" Auxiliary Deck Gun Discharge Hale Valve for use with CAFS System	$3,910
4415-0211	2.5" Front Bumper Discharge Hale Manual Valve	$1,713
4415-0212	1.5" Front Bumper Discharge Hale Electric Valve	$2,937
4415-0213	2.5" Front Bumper Discharge Hale Electric Valve	$3,231
4415-0214	1.5" Left Front Hosebed Discharge Hale Manual Valve	$1,071
4415-0215	3" Left Front Hosebed Discharge Hale Manual Valve	$2,158
4415-0216	1.5" Left Front Hosebed Discharge Hale Electric Valve	$2,464
4415-0217	2.5" Left Front Hosebed Discharge Hale Electric Valve	$3,101
4415-0218	3" Left Front Hosebed Discharge Hale Electricl Valve	$4,242
4415-0227	2.5" Left Panel Discharge Hale Electric Valve. Location: [#LOC]	$2,737
4415-0228	2.5" Left Panel Discharge Hale Electric Valve with Droop. Location: [#LOC]	$2,976
4415-0232	2.5" Right Pump Panel Discharge Hale Electric Valve. Location: [#LOC]	$2,841
4415-0233	2.5" Right Pump Panel Discharge Hale Electric Valve with droop. Location: [#LOC]	$3,079
4415-0234	3" Right Pump Panel Discharge Hale Electric Valve Location: [#LOC]	$3,934

4415-0235	3" Right Pump Panel Discharge Hale Electric Valve with Droop Location: [#LOC]	$4,220
4415-0236	4" Right Pump Panel Discharge with 3" Hale Electric Valve Location: [#LOC]	$4,200
4415-0237	5" Right Pump Panel Discharge with 3" Hale Electric Valve Location: [#LOC]	$4,887
4415-0243	1.5" Right Rear Discharge Hale Manual Valve Location: [#LOC]	$1,087
4415-0244	3" Right Rear Discharge Hale Manual Valve Location: [#LOC]	$1,882
4415-0245	1.5" Right Rear Discharge Hale Electric Valve Location: [#LOC]	$2,481
4415-0246	2.5" Right Rear Discharge Hale Electric Valve Location: [#LOC]	$2,841
4415-0247	3" Right Rear Discharge Hale Electric Valve Location: [#LOC]	$3,967
4415-0248	1.5" Crosslay Elkhart Manual Valve Location: [#LOC]	$951
4415-0249	2.5" Crosslay Elkhart Manual Valve. To be located rearward of 1.5" crosslay(s) if applicable. Location: [#LOC]	$1,223
4415-0250	1.5" Crosslay w/2" Elkhart Electric Valve Location: [#LOC]	$2,104
4415-0251	2.5" Crosslay w/Elkhart Electric Valve. To be located rearward of 1.5" crosslay(s) if applicable. Location: [#LOC]	$2,570
4415-0258	4" Waterway Discharge with 3" Hale Electric Valve	$4,174
4415-0259	4" Waterway Discharge with 4" Hale Electric Valve	$5,279
4415-0260	4" Waterway Discharge with 3" Elkhart Manual Valve	$2,294
4415-0261	4" Waterway Discharge with 3" Elkhart Electric Valve	$3,618
4415-0262	4" Waterway Discharge with 4" Elkhart Electric Valve	$5,465
4415-0263	3" Auxillary Waterway Discharge Elkhart Manual Valve. Plumbed from foam manifold and "Y" into w/way pipe downstream from main w/way discharge valve.	$1,322
4415-0264	2.5" Auxillary Waterway Discharge Elkhart Manual Valve. Plumbed from foam manifold and "Y" into w/way pipe downstream from main w/way discharge valve.	$1,194
4415-0265	3" Deck Gun Discharge Elkhart Manual Valve w/RC-10 Controler	$1,740
4415-0266	3" Deck Gun Discharge Elkhart Electric Valve	$3,063
4415-0267	2.5" Auxiliary Deck Gun Discharge Elkhart Valve for use with CAFS System	$1,965
4415-0268	1.5" Front Bumper Discharge Elkhart Manual Valve	$1,521
4415-0269	2.5" Front Bumper Discharge Elkhart Manual Valve	$1,801
4415-0270	1.5" Front Bumper Discharge Elkhart Electric Valve	$2,673
4415-0271	2.5" Front Bumper Discharge Elkhart Electric Valve	$3,150
4415-0272	1.5" Left Front Hosebed Preconnect Elkhart Manual Valve	$1,010
4415-0273	2.5" Left Front Hosebed Discharge Elkhart Manual Valve	$1,493
4415-0274	3" Left Front Hosebed Discharge Elkhart Manual Valve	$2,173
4415-0275	1.5" Left Front Hosebed w/2" Elkhart Electric Valve	$2,163
4415-0276	2.5" Left Front Hosebed Elkhart Electric Valve	$2,841
4415-0280	3" Right Front Hosebed Discharge Elkhart Manual Valve	$2,173
4415-0285	4" Pump Panel Discharge Elkhart Electric Valve Location: [#LOC]	$4,494
4415-0286	5" Pump Panel Discharge with 4" Akron Electric Valve Location: [#LOC]	$4,910
4415-0287	5" Pump Panel Discharge with 4" Hale Electric Valve Location: [#LOC]	$5,883
4415-0288	5" Pump Panel Discharge with 4" Elkhart Electric Valve Location: [#LOC]	$5,097
4415-0289	2.5" Left Pump Panel Discharge Elkhart Manual Valve. Location: [#LOC]	$1,076
4415-0290	2.5" Left Panel Discharge Elkhart Manual Valve w/45 Degree Droop Location: [#LOC]	$1,317
4415-0292	2.5" Left Pump Panel Discharge Elkhart Electric Valve. Location: [#LOC]	$2,424
4415-0293	2.5" Left Panel Discharge Elkhart Electric Valve w/45 Degree Droop Location: [#LOC]	$2,665
4415-0299	2.5" Right Pump Panel Discharge Elkhart Manual Valve. Location: [#LOC]	$1,178
4415-0300	2.5" Right Panel Discharge Elkhart Manual Valve w/45 Degree Droop Location: [#LOC]	$1,317
4415-0301	3" Right Pump Panel Discharge Elkhart Manual Valve Location: [#LOC]	$1,710
4415-0302	4" Right Pump Panel Discharge with 3" Elkhart Manual Valve w/RC-10 Control w/lights Location: [#LOC]	$1,975
4415-0303	5" Right Pump Panel Discharge with 3" Elkhart Manual Valve Location: [#LOC]	$2,660
4415-0304	2.5" Right Pump Panel Discharge Elkhart Electric Valve Location: [#LOC]	$2,527
4415-0305	2.5" Right Panel Discharge Elkhart Electric Valve w/45 Degree Droop Location: [#LOC]	$2,665
4415-0306	3" Right Pump Panel Discharge Elkhart Electric Valve Location: [#LOC]	$3,035
4415-0307	4" Right Pump Panel Discharge w/3" Elkhart Electric Valve Location: [#LOC]	$3,301
4415-0308	5" Right Pump Panel Discharge w/3" Elkhart Electric Valve Location: [#LOC]	$3,985
4415-0315	1.5" Right Rear Discharge Elkhart Manual Valve Location: [#LOC]	$1,062
4415-0316	2.5" Right Rear Discharge Elkhart Manual Valve Location: [#LOC]	$1,234
4415-0318	1.5" Right Rear Discharge Elkhart Electric Valve Location: [#LOC]	$2,215
4415-0319	2.5" Right Rear Discharge Elkhart Electric Valve Location: [#LOC]	$2,581
4415-0370	Second 1.5" Front Bumper Discharge Akron Manual Valve	$1,447
4415-0371	Second 1.5" Front Bumper Discharge Hale Manual Valve	$1,543
4415-0372	Second 1.5" Front Bumper Discharge Akron Electric Valve	$2,985
4415-0373	Second 2.5" Front Bumper Discharge Akron Electric Valve	$3,132
4415-0374	Second 1.5" Front Bumper Discharge Akron Electric Valve & Navigator 9305	$5,484
4415-0376	Second 2.5" Front Bumper Discharge Akron Electric Valve & Navigator 9305	$6,367
4415-0378	Second 2.5" Front Bumper Discharge Akron Manual Valve	$1,662
4415-0379	Second 2.5" Front Bumper Discharge Hale Manual Valve	$1,713
4415-0380	Second 1.5" Front Bumper Discharge Hale Electric Valve	$2,937
4415-0381	Second 2.5" Front Bumper Discharge Hale Electric Valve	$3,231
4415-0382	Second 1.5" Front Bumper Discharge Elkhart Manual Valve	$1,521
4415-0383	Second 2.5" Front Bumper Discharge Elkhart Manual Valve	$1,801
4415-0384	Second 1.5" Front Bumper Discharge Elkhart Electric Valve	$2,673
4415-0385	Second 2.5" Front Bumper Discharge Elkhart Electric Valve	$3,150
4415-0391	4" Deck Gun Discharge Akron Electric Valve	$5,112
4415-0392	4" Deck Gun Discharge Hale Electric Valve	$6,055
4415-0393	4" Deck Gun Discharge Elkhart Electric Valve	$5,294

4415-0399	1.5" Crosslay w/2" Akron Valve Handwheel Control Location: [#LOC]	$1,857
4415-0400	1.5" Crosslay w/2" Elkhart Valve Handwheel Control Location: [#LOC]	$1,904
4415-0401	2.5" Crosslay w/Akron Valve Handwheel Control. To be located rearward of 1.5" crosslay(s) if applicable. Location: [#LOC]	$2,041
4415-0402	2.5" Crosslay w/Elkhart Valve Handwheel Control. To be located rearward of 1.5" crosslay(s) if applicable. Location: [#LOC]	$2,087
4415-0403	3" Deck Gun Discharge Akron Valve Handwheel Control	$2,493
4415-0404	3" Deck Gun Discharge Elkhart Valve Handwheel Control	$2,540
4415-0405	1.5" Front Bumper Discharge Akron Valve Handwheel Control	$2,404
4415-0406	1.5" Front Bumper Discharge Elkhart Valve Handwheel Control	$2,450
4415-0407	2.5" Front Bumper Discharge Akron Valve Handwheel Control	$2,619
4415-0408	2.5" Front Bumper Discharge Elkhart Valve Handwheel Control	$2,666
4415-0409	1.5" Left Front Hosebed Preconnect AkronValve Handwheel Control	$1,894
4415-0410	1.5" Left Front Hosebed Preconnect Elkhart Valve Handwheel Control	$1,941
4415-0411	2.5" Left Front Hosebed Discharge Akron Valve Handwheel Control	$2,311
4415-0412	2.5" Left Front Hosebed Discharge Elkhart Valve Handwheel Control	$2,357
4415-0413	3" Left Front Hosebed Discharge Akron Valve Handwheel Control	$2,926
4415-0414	3" Left Front Hosebed Discharge Elkhart Valve Handwheel Control	$2,972
4415-0419	3" Right Front Hosebed Discharge Akron Valve Handwheel Control	$2,926
4415-0420	3" Right Front Hosebed Discharge Elkhart Valve Handwheel Control	$2,972
4415-0421	4" Pump Panel Discharge Akron Valve Handwheel Control. (Waterous pumps noted location to be forward lower port) Location: [#LOC]	$3,602
4415-0422	4" Pump Panel Discharge Elkhart Valve Handwheel Control. Location [#LOC]	$3,674
4415-0423	5" Right Pump Panel Discharge with 4" Akron Valve Handwheel Control	$4,207
4415-0424	5" Right Pump Panel Discharge with 4" Elkhart Valve Handwheel Control	$4,277
4415-0425	2.5" Right Pump Panel Discharge Akron Valve Handwheel Control. Location: [#LOC]	$1,999
4415-0426	2.5" Right Pump Panel Discharge Elkhart Valve Handwheel Control. Location: [#LOC]	$2,044
4415-0427	2.5" Right Panel Discharge Akron Valve Handwheel Control w/30 Degree Droop Location: [#LOC]	$2,135
4415-0428	2.5" Right Panel Discharge Elkhart Valve Handwheel Control w/30 Degree Droop Location: [#LOC]	$2,182
4415-0429	3" Right Pump Panel Discharge Akron Valve Handwheel Control Location: [#LOC]	$2,463
4415-0430	3" Right Pump Panel Discharge Elkhart Valve Handwheel Control Location: [#LOC]	$2,509
4415-0431	3" Right Panel Discharge Akron Valve Handwheel Control w/Droop Location: [#LOC]	$2,757
4415-0432	4" Right Panel Dischargew/3" Akron Valve Handwheel Control Location: [#LOC]	$2,729
4415-0433	4" Right Panel Dischargew/3" Elkhart Valve Handwheel Control Location: [#LOC]	$2,776
4415-0434	5" Right Pump Panel Discharge with 3" Akron Valve Handwheel Control Location: [#LOC]	$3,414
4415-0435	5" Right Pump Panel Discharge with 3" Elkhart Valve Handwheel Control Location: [#LOC]	$3,461
4415-0443	1.5" Right Rear Discharge Akron Valve Handwheel Control Location: [#LOC]	$1,946
4415-0444	1.5" Right Rear Discharge Elkhart Valve Handwheel Control Location: [#LOC]	$1,991
4415-0445	2.5" Right Rear Discharge Akron Valve Handwheel Control Location: [#LOC]	$2,052
4415-0446	2.5" Right Rear Discharge Elkhart Valve Handwheel Control Location: [#LOC]	$2,098
4415-0451	4" Waterway Discharge with 3" Akron Valve Handwheel Control	$3,046
4415-0452	4" Waterway Discharge with 3" Elkhart Valve Handwheel Control	$3,093
4415-0453	4" Waterway Discharge Akron Valve Handwheel Control	$3,603
4415-0454	4" Waterway Discharge Elkhart Valve Handwheel Control	$3,675
4415-0455	Second 1.5" Front Bumper Discharge Akron Valve Handwheel Control	$2,404
4415-0456	Second 1.5" Front Bumper Discharge Elkhart Valve Handwheel Control	$2,450
4415-0457	Second 2.5" Front Bumper Discharge Akron Valve Handwheel Control	$2,619
4415-0458	Second 2.5" Front Bumper Discharge Elkhart Valve Handwheel Control	$2,666
4415-0489	2.5" Auxillary Waterway Discharge Akron Elect Valve. Plumbed from foam manifold and "Y" into w/way pipe downstream from main w/way discharge valve.	$3,178
4415-0491	2.5" Left Panel Discharge Elkhart Manual UnibodyValve w/30 Degree Droop Location: [#LOC]	$1,289
4415-0492	2.5" Right Panel Discharge Elkhart Manual UnibodyValve w/30 Degree Droop Location: [#LOC]	$1,312
4415-0493	1.5" Crosslay w/2" Elkhart Unibody Manual Valve Location: [#LOC]	$951
4415-0494	1.5" Crosslay w/2" Elkhart Unibody Electric Valve UBEC3 Location: [#LOC]	$4,626
4415-0495	2.5" Right Panel Discharge Elkhart Hand Wheel Control UnibodyValve w/45 Degree Droop Location: [#LOC]	$2,113
4415-0496	3" Deck Gun Discharge Elkhart Unibody Valve Handwheel Control	$2,451
4415-0497	4" Pump Panel Discharge Elkhart Electric UBEC3 Valve Location: [#LOC]	$6,037
4415-0498	1.5" Right Rear Discharge Elkhart Electric UBEC3 Valve Location: [#LOC]	$4,487
4415-0499	2.5" Right Rear Discharge Elkhart Electric UBEC3 Valve Location: [#LOC]	$5,214
4415-0500	1.5" Front Bumper Discharge Elkhart Electric UBEC3 Valve	$4,757
4415-0502	1.5" Front Bumper Discharge Akron Manual Valve without Blowout	$1,447
4415-0504	2.5" Right Panel Discharge Elkhart Manual UnibodyValve Location: [#LOC]	$1,202
4415-0505	2.5" Left Panel Discharge Elkhart Manual UnibodyValve Location: [#LOC]	$1,177
4415-0506	2.5" Right Panel Discharge Elkhart Hand Wheel Control UnibodyValve Location: [#LOC]	$2,003
4415-0509	2.5" Auxillary Waterway Discharge Akron Hand Wheel Valve. Plumbed from foam manifold and "Y" into w/way pipe downstream from main w/way discharge valve.	$2,202
4415-0514	4" Officer side discharge. Foward of steamer and includes 30 degree droop, 4" Elkhart Elect Control full flow valve.	$4,655
4415-0515	Recess Front Jumpline Swivel so WYE Valve Clear Rise Lid and Tray.	$151
4415-0516	4" Right Panel Discharge w/ 3" Akron Valve Handwheel Control w/Droop Location: [#LOC]	$3,030
4415-0517	4" Right Pump Panel Discharge with 3" Akron Manual Valve w/Droop Location: [#LOC]	$2,066
4415-0518	4" Right Panel Discharge w/ 3" Akron Valve Electric w/Droop Location: [#LOC]	$4,072
4415-0519	4" Right Pump Panel Discharge w/3" Akron Electric Valve & Navigator 9305 with 30 Degree Droop Location: [#LOC]	$6,830

4415-0520	4" Right Pump Panel Discharge with 3" Hale Manual Valve with 30 Degree Droop Location: [#LOC]	$2,409
4415-0521	4" Right Pump Panel Discharge with 3" Hale Electric Valve with 30 Degree Droop Location: [#LOC]	$4,494
4415-0523	5" Right Panel Discharge w/4" Elkhart Electric UBEC3 Valve Location: [#LOC]	$6,302
4415-0524	3" Deck Gun Discharge Elkhart Unibody Manual Valve	$1,733
4415-0525	1.5" Front Bumper Discharge Elkhart Unibody Manual Valve	$1,521
4415-0527	1.5" Crosslay w/2" Elkhart Electric Unibody UBEC1 Valve Location: [#LOC]	$2,626
4415-0528	2.5" Left Pump Panel Discharge Elkhart Unibody Electric Valve. Location: [#LOC]	$2,874
4415-0529	3" Right Pump Panel Discharge Elkhart Unibody Electric Valve Location: [#LOC]	$3,513
4415-0530	4" Pump Panel Discharge Elkhart UBEC1 Electric Valve Location: [#LOC]	$4,307
4415-0531	4" Pump Panel Discharge Akron Electric Valve with 30 Degree Droop Location: [#LOC]	$4,587
4415-0532	4" Waterway Discharge with 4" Elkhart Unibody Electric Valve	$4,308
4415-0536	5" Right Pump Panel Discharge with 4" Akron Valve Handwheel Control Location: [#LOC]	$3,619
4415-0537	2.5" Crosslay Elkhart Unibody Manual Valve. To be located rearward of 1.5" crosslay(s) if applicable. Location: [#LOC]	$1,277
4415-0541	3" Deck Gun Discharge Elkhart Unibody Manual Valve.	$1,635
4415-0542	Second 1.5" Front Bumper Discharge Elkhart Unibody Manual Valve	$1,521
4415-0545	5" Pump Panel Discharge with 4" Elkhart UBEC1 Electric Valve Location: [#LOC]	$5,097
4415-0546	4" Waterway Discharge with 3" Elkhart Unibody Valve Handwheel Control	$3,093
4415-0547	2.5" Front Bumper Discharge Elkhart Unibody Manual Valve	$1,801
4415-0548	3" Auxillary Waterway Discharge Elkhart Unibody Manual Valve. Plumbed from foam manifold and "Y" into w/way pipe downstream from main w/way discharge valve.	$1,110
4415-0549	1.5" Front Bumper Discharge Elkhart Electric UBEC1 Valve	$3,073
4415-0552	1.5" Front Bumper Crosslay Discharge Akron Manual Valve	$2,031
4415-0553	2.5" Left Front Hosebed Discharge Akron Manual Valve located outlet shall be located 13.625" from inside hosebed wall.	$1,355
4415-0555	3" Deck Gun Discharge Akron Manual Valve with no Plumbing form the valve to deck gun channel Dealer to install Extend-A-Gun and Plumbing from the valve to the channel..	$1,427
4415-0556	4" Waterway Discharge with 4" Akron Electric Valve & Navigator 9305 Control	$7,210
4415-0559	5" Right Pump Panel Discharge with 4" Elkhart Unibody Valve Handwheel Control Location: [#LOC]	$3,856
4415-0561	2.5" Left Panel Discharge Akron Electric Valve w/30 Degree Droop Location: [#LOC]	$3,117
4415-0562	3" Right Pump Panel Discharge Akron Electric Valve w/30degree Droop Location: [#LOC]	$3,673
4415-0563	2.5" Right Panel Discharge Akron Electric Valve w/30 Degree Droop Location: [#LOC]	$3,117
4415-0564	3" Right Pump Panel Discharge Elkhart Electric Valve w/30degree Droop Location: [#LOC]	$3,673
4415-0565	4" Waterway Discharge with 5" Elkhart Electric Valve	$5,570
4415-0566	1.5" Crosslay w/2" Akron Electric Valve Location: [#LOC]	$2,626
4415-0567	2.5" Crosslay w/Akron Electric Valve. To be located rearward of 1.5" crosslay(s) if applicable. Location: [#LOC]	$3,019
4415-0568	3" Deck Gun Discharge Akron Electric Valve	$3,540
4415-0569	4" Deck Gun Discharge Akron Electric Valve	$5,112
4415-0570	1.5" Front Bumper Discharge Akron Electric Valve	$2,985
4415-0571	Second 1.5" Front Bumper Discharge Akron Electric Valve	$2,985
4415-0572	2.5" Front Bumper Discharge Akron Electric Valve	$3,132
4415-0573	Second 2.5" Front Bumper Discharge Akron Electric Valve	$3,132
4415-0574	2.5" Left Pump Panel Discharge Akron Electric Valve. Location: [#LOC]	$2,874
4415-0575	2.5" Left Panel Discharge Akron Electric Valve w/30 Degree Droop. Location: [#LOC]	$2,874
4415-0576	4" Pump Panel Discharge Akron Electric Valve Location: [#LOC]	$4,307
4415-0577	5" Pump Panel Discharge with 4" Akron Electric Valve Location: [#LOC]	$4,910
4415-0582	1.5" Right Rear Discharge Akron Electric Valve Location: [#LOC]	$2,738
4415-0583	2.5" Right Rear Discharge Akron Electric Valve Location: [#LOC]	$3,034
4415-0586	2.5" Right Pump Panel Discharge Akron Electric Valve Location: [#LOC]	$2,874
4415-0587	3" Right Pump Panel Discharge Akron Electric Valve Location: [#LOC]	$3,513
4415-0588	4" Right Pump Panel Discharge w/3" Akron Electric Valve Location: [#LOC]	$3,778
4415-0589	5" Right Pump Panel Discharge w/3" Akron Electric Valve Location: [#LOC]	$4,462
4415-0590	2.5" Right Panel Discharge Akron Electric Valve w/30 Degree Droop Location: [#LOC]	$3,117
4415-0591	3" Right Panel Discharge Akron Electric Valve w/30 Degree Droop Location: [#LOC]	$3,804
4415-0592	4" Right Panel Discharge w/ 3" Akron Valve Electric w/Droop Location: [#LOC]	$4,072
4415-0593	3" Right Pump Panel Discharge Akron Electric Valve w/30degree Droop Location: [#LOC]	$3,673
4415-0594	2.5" Right Panel Discharge Akron Electric Valve w/30 Degree Droop Location: [#LOC]	$3,117
4415-0595	1.5" Left Front Hosebed w/2" Akron Electric Valve	$2,685
4415-0596	2.5" Left Front Hosebed Akron Electric Valve	$3,293
4415-0601	1.5" Crosslay w/2" Akron Electric Valve Location: [#LOC]	$2,626
4415-0612	4" Waterway Discharge with 3" Akron Electric Valve	$3,601
4415-0613	4" Waterway Discharge with 4" Akron Electric Valve	$4,308
4415-0617	2.5" Left Panel Discharge Akron Manual 3" Valve w/30 Degree Droop Location: [#LOC]	$1,506
4415-0618	2.5" Auxillary Deck Gun Discharge Akron Manual Valve. Plumbed from foam manifold and "Y" into Deck Gun pipe downstream from main Deck Gun discharge valve.	$1,054
4415-0619	4" Right Pump Panel Discharge with 3" Akron Manual Valve The 4" NST Adapter shall be a integral part of the valve. Location: [#LOC]	$1,772
4415-0621	3" Left Front Hosebed Discharge Elkhart Unibody Manual Valve	$2,173
4415-0622	3" Right Front Hosebed Discharge Elkhart Unibody Manual Valve	$2,173
4415-0627	3" Deck Gun Discharge Elkhart Electric Unibody UBEC3Valve	$5,420
4415-0628	5" Pump Panel Discharge Elkhart Electric UBEC3 Valve Location; [#LOC]	$5,680
4415-0629	2.5" Right Rear Discharge Elkhart Unibody Manual Valve Location: [#LOC]	$1,234
4415-0632	1.5" Left Front Hosebed Preconnect Elkhart Unibody Manual Valve	$1,010
4415-0636	4" Right Pump Panel Discharge with 3" Elkhart Unibody Manual Valve Location: [#LOC]	$1,975

4415-0651	4" Waterway Discharge with 4" Akron Electric Valve with Digital Flow Meter.	$5,168
4415-0659	2.5" Left Pump Panel Discharge Elkhart Unibody Electric Valve with Droop. Location: [#LOC]	$2,993
4415-0660	2.5" Right Panel Discharge Elkhart Electric Valve w/Droop Location: [#LOC]	$2,992
4415-0661	4" Right Pump Panel Discharge w/3" Elkhart Electric Unibody Valve Location: [#LOC]	$3,392
4415-0662	3" Deck Gun Discharge Elkhart Electric Unibody Valve	$3,540
4415-0665	1.5" Front Bumper Discharge Akron Electric Valve & Navigator 9315	$5,484
4415-0667	2.5" Left Panel Dishcarge Akron Electric Valve & Navigator 9315 w/30 Degree Droop Location: [#LOC]	$5,291
4415-0668	2.5" Right Panel Discharge Akron Electric Valve & Navigator 9315 w/30 Degree Droop Location: [#LOC]	$5,291
4415-0670	3" Right Panel Discharge Akron Electric Valve & Navigator 9315 w/30 Degree Droop Location: [#LOC]	$6,164
4415-0719	3" Deck Gun Discharge Akron Electric Valve & Navigator 9315	$6,301
4415-0720	4" Right Pump Panel Discharge w/3" Akron Electric Valve & Navigator 9315 Location: [#LOC]	$6,536
4415-0722	3" Deck Gun Discharge Akron Electric Valve with a 9315 valve controller with pressure reading only. [#LOC]	$3,940
4415-0723	4" Pump Panel Discharge Akron Electric Valve & Navigator 9315 Location: [#LOC]	$7,607
4415-0724	4" Rear Mount Discharge w/3" Akron 9315 Electric Valve to read Flow and Pressure with 30 degree droop Location: [#LOC]	$6,536
4415-0725	4" Rear Mount Discharge w/3" Akron 9315 Electric Valve to read Pressure Location: [#LOC]	$3,728
4415-0726	1.5" Front Bumper Discharge Akron Electric Valve & Navigator 9315 with Pressue Reading only.	$3,345
4415-0727	1.5" Crosslay w/2" Akron Electric Valve & Navigator 9315 to Read Pressure only Location: [#LOC]	$3,112
4415-0728	2.5" Rear Mount Discharge Akron Electric Valve & Navigator 9305 to Read Pressure only. Location: [#LOC]	$3,264
4415-0730	2.5" Left Rear Discharge UBEC3 Electric Valve Location: [#LOC]	$5,214
4415-0731	2.5" Left Pump Panel Discharge UBEC3 Electric Valve with 30 degree droop Location: [#LOC]	$5,184
4415-0732	2.5" Right Pump Panel Discharge UBEC3 Electric Valve with 30 degree droop Location: [#LOC]	$5,184
4415-0733	4.5" Right Pump Panel Discharge with 3" Akron Manual Valve w/Droop Location: right side discharge 1 [#LOC]	$2,248
4415-0739	3" Right Pump Panel Discharge Elkhart Electric Valve w/30degree Droop to Terminate with 2.5" MNST w/cap Location: [#LOC]	$3,673
4415-0744	2.5" Crosslay w/2.5" Akron Electric Valve & Navigator 9315 to Read Pressure only Location: [#LOC]	$3,607
4415-0745	2.5" Left Panel Discharge Akron Electric 9315 Navigator Valve w/30 Degree Droop to Read Pressure only Location: [#LOC]	$3,583
4415-0746	2.5" Right Panel Discharge Akron Electric 9315 Navigator Valve w/30 Degree Droop to Read Pressure only Location: [#LOC]	$3,583
4415-0747	4" Pump Panel Discharge Akron Electric Navigator 9315 Valve (Read Pressure only) Location: [#LOC]	$4,717
4415-0748	4" Waterway Discharge with 4" Akron Electric Navigator 9315 Valve (Read Pressure only)	$4,687
4415-0751	2.5" Crosslay Elkhart UBEC3 Electric Valve. To be located rearward of 1.5" crosslay(s) if applicable. Location: [#LOC]	$5,066
4415-0752	4" Waterway Discharge with 4" Elkhart UBEC3 Valve.	$6,751
4415-0757	1.5" Front Bumper Discharge Elkhart Electric UBEC3 Valve	$4,982
4415-0758	Left Front Hosebed Discharge 2.5" Elkhart Unibody UBECE Valve.	$5,148
4415-0759	Right Front Hosebed Discharge 2.5" Elkhart Unibody UBECE Valve.	$5,148
4417-0019	Fire Shop Bezel Chrome - Side Discharge	$87
4417-0026	Valve Drain Automatic. For: [#LOC]	$73
4417-0030	Monitor Akron 3578 Elec 2000	$9,162
4417-0031	Monitor Akron 3570 Manual 2000	$3,358
4417-0032	Monitor Scorpion wireless RF radio 2000 GPM	$10,283
4417-0039	Akron DeckMaster 3440 Electric 1250gpm Monitor w/Stow	$10,674
4417-0040	Akron 5177 Akromatic 2.5" Master Stream Nozzle for an Akron 3440 DeckMaster Monitor	$1,629
4417-0041	Akron 1577 SaberMaster 2.5" Nozzle for an Akron 3440 DeckMaster Monitor	$3,115
4417-0042	Akron Tether Kit with 30' Cable for an Akron Monitor Location: [#LOC]	$1,033
4417-0043	Task Force Hurricane RC Electric 1250gpm Monitor	$12,018
4417-0044	Task Force M-ERP-NJ 2.5" Masterstream Electric Nozzle for a Hurricane RC Monitor	$1,801
4417-0045	Elkhart Stinger 8297-25 Manual 800gpm Monitor w/portable base and adapter to mount to deck gun discharge or extend-a-gun	$2,979
4417-0046	Elkhart 8500 Vulcan RF Monitor with Panel Mounted and Hand-Held Remote Controls w/adapter to mount to deck gun discharge or extender	$5,940
4417-0047	Elkhart SM-1250E Select-O-Matic 2.5" Electric Nozzle	$2,254
4417-0048	Elkhart 8598 Electrically Actuated Extender	$2,697
4417-0051	Thread Type: All 1.5" discharges to be NPSH threads. All 2.5" inlets and discharges to be CSA (Ontario) threads as an integral part of the valve.	$589
4417-0052	Extend Specified Hosebed Preconnect up to top of hosebed. Top of preconnect to be below top of hosebed. Location: [#LOC]	$375
4417-0057	Ferrell Compression Fittings for all Discharge and Intake Bleeder Lines	$568
4417-0059	Extend Specified Hosebed Preconnect up to mid-point of hosebed. Center of preconnect to be approximately center of hosebed height. Location: [#LOC]	$282
4417-0067	Monitor 4" TFT Monsoon Manual with TFT Master Stream 2000 gpm manual Nozzle.	$5,992
4417-0068	TFT Tether Kit with 30' Cable for an TFT Monitor Location: [#LOC]	$718
4417-0075	Monitor 4" TFT Monsoon Electric with TFT Master Stream 2000 gpm electric Nozzle with Radio Remote.	$13,533
4417-0077	Adapter 3"FNST x 3.5" MNST with Cap.	$219
4417-0078	Thread Type: All 1.5" discharges to be NPSH threads. All 2.5" inlets and discharges to be (Western Canada Fire Underwriters Association) threads as an integral part of the valve.	$765
4417-0079	9304 Akron Navitgator electric valve control. Location: All electric discharge valves IPOS.	$555
4417-0080	All 1.5" Threads to be IPT threads	$63
4417-0081	Vented Cap&Plug For All Discharges/Intakes	$539
4417-0083	Elkhart 8297F Stinger RF Monitor with Panel Mounted and Hand-Held Remote Controls w/adapter to mount to deck gun discharge or extender	$8,453
4417-0084	Task Force M-ERP-NJ 2.5" Masterstream Electric Nozzle for a Hurricane RC Monitor	$1,801

4417-0085	Thread Type: All 1.5" discharges to be NPSH threads.	$295
4417-0086	Task Force Typhoon RC Electric Monitor with 1500gpm nozzle. Include Radio Remote Control	$12,667
4417-0088	Bleeder Drain Valve Plumbed to: [#LOC]	$106
4417-0090	Additional control for deck gun electric valve locate adjacent to the outlet.	$1,604
4417-0092	Task Force Typhoon RC Electric Monitor without nozzle. Include Radio Remote Control (Require Nozzle)	$10,167
4417-0100	Akron 3600 Wireless Remote Control.	$1,588
4417-0102	Akron DeckMaster 3440 Electric 1250gpm Monitor w/Stow. With 30" Tether controller located in pump panel operator compartment.	$11,230
4430-0011	1600 Rockwood Around The Pump Foam System	$3,908
4430-0013	1500 Williams Around The Pump Foam System	$6,633
4430-0014	2.1A Hale Foam Logix Foam System	$6,589
4430-0015	3.3 Hale Foam Logix Foam System	$13,999
4430-0016	5.0 Hale Foam Logix Foam System	$15,782
4430-0017	400 Rockwood around the pump foam system.	$2,944
4430-0018	1600 Hypro/Foam Pro Foam System	$7,643
4430-0019	2001 Hypro/Foam Pro Foam System	$12,414
4430-0020	2002 Hypro/Foam Pro Foam System	$15,824
4430-0028	Pneumax 140-P Compressed Air Foam System	$30,101
4430-0029	Pneumax 140-SP Silver Compressed Air Foam System	$17,893
4430-0031	Eclipse Compressed Air Foam System 1000 GPM Manifold w/2002 FoamPro	$73,865
4430-0032	CAFSPRO with 2.1 Foam Logix Compressed Air Foam System with 750gpm Manifold	$44,049
4430-0034	Pneumax 80-P PTO Platinum Compressed Air Foam System	$22,714
4430-0035	Pneumax 80-SP PTO Silver Compressed Air Foam System	$15,842
4430-0037	Pneumax 200-P Platinum Compressed Air Foam System	$34,923
4430-0038	Pneumax 200-SP Silver Compressed Air Foam System	$19,637
4430-0039	Eclipse Compressed Air Foam System 500 GPM Manifold w/2001 FoamPro	$68,878
4430-0041	WATP 500 A/B Foam System Include 1.5" Foam pick up.	$9,071
4430-0042	Advent 12 Foam System for a Single Foam Tank	$18,425
4430-0043	Advent 12 Dual Foam System for Dual Foam Tanks	$20,227
4430-0045	95 GPM Akron Foam Eductor Location: [#LOC]	$2,022
4430-0046	125 GPM Elkhart Foam Eductor Location: [#LOC]	$2,521
4430-0047	125 GPM Akron Foam Eductor Location: [#LOC]	$2,309
4430-0048	95 GPM Elkhart Foam Eductor Location: [#LOC]	$2,300
4430-0052	CAFSPRO with 3.3 Foam Logix Compressed Air Foam System with 750gpm Manifold	$55,592
4430-0053	CAFSPRO with 5.0 Foam Logix Compressed Air Foam System with 750gpm Manifold	$56,537
4430-0056	125 GPM Elkhart Foam Eductor w/air actuated foam valve Location: [#LOC]	$3,044
4430-0057	125 GPM Arkon Foam Eductor w/air actuated foam valve Location: [#LOC]	$2,708
4430-0058	Hot Shift Clutch - Required with CAFS system	$2,756
4430-0059	Eclipse Compressed Air Foam System 500 GPM Manifold w/2002 FoamPro	$72,288
4430-0060	CAFSPRO 5.0 Foam Logix Compressed Air Foam System with 1000 gpm manifold	$58,070
4430-0066	Foam Tank To Pump 1" Air/Act for Dealer inatall foam system.	$769
4430-0070	125 GPM Akron Simple Apparatus Foam System	$1,467
4430-0071	1500V Williams A/B Around The Pump Foam System	$8,160
4430-0073	1.5 Feecon Around The Pump Foam System	$3,972
4430-0075	2.0 Feecon Around The Pump Foam System	$4,089
4430-0076	Eclipse Waterous Compressed Air Foam System 1000 GPM Manifold.	$58,042
4430-0077	Waterous Advantus 6.0 Foam System	$17,761
4430-0078	Classic 140 Compressed Air Foam System. Shall include (5) Discharge outlets (1) 2.5" Left Hosebed Preconnect Discharge, (2) 1.5" Crosslay outlets, and (2) booster reels.	$38,559
4430-0079	The foam system performance shall be tested and certified in compliance with 2009 NFPA 1901.	$264
4430-0080	The balanced pressure foam system performance shall be tested and certified in compliance with 2009 NFPA 1901.	$528
4430-0081	1500 Williams Around The Pump Foam System Up Graded to 2000gpm at 3%	$2,586
4430-0085	Classic 140 Compressed Air Foam System.	$21,898
4432-0001	Akron 5078 Electric 2000 GPM Nozzle	$2,125
4432-0002	Akron 5070 Manual 2000 GPM Nozzle	$1,635
4432-0003	Elkhart SM2000 Electric Nozzle	$2,113
4432-0012	Advent Ratio Controller 2" Discharge. Plumbed to: [#LOC]	$1,594
4432-0013	Advent Ratio Controller 2.5" Discharge. Plumbed to: [#LOC]	$1,597
4432-0014	Advent Ratio Controller 3" Discharge. Plumbed to: [#LOC]	$1,620
4432-0015	Advent Ratio Controller 4" Discharge. Plumbed to: [#LOC]	$1,795
4432-0019	Foam Pro Remote Start Switch	$646
4432-0020	Eclipse 1.5"/3.0" Compressed Air Foam System Discharge Kit Location: [#LOC]	$19
4432-0022	1.5" Compressed Air Foam System Discharge Kit Location: [#LOC]	$308
4432-0023	2.0" Compressed Air Foam System Discharge Kit Location: [#LOC]	$311
4432-0024	2.5" Compressed Air Foam System Discharge Kit Location: [#LOC]	$314
4432-0025	3.0" Compressed Air Foam System Discharge Kit Location: [#LOC]	$351
4432-0026	3" Deck Gun Discharge Eclipse Compressed Air Foam System	$3,459
4432-0027	3" Deck Gun Compressed Air Foam System	$3,757
4432-0036	A/B Hypro/FoamPro Foam Selector	$2,087
4432-0037	A/B Class 1 Manual Foam Selector	$3,013
4432-0045	Hot Shift Clutch	$2,838
4432-0052	Remote Foam Tank Fill (Foam Pro's "Power Fill")	$544
4432-0054	Akron Quick Disconnect Foam Pickup Tube on Driver's Side Pump Panel for Eductor Located on: [#LOC]	$437
4432-0055	Elkhart Quick Disconnect Foam Pickup Tube on Driver's Side Pump Panel for Eductor Located on: [#LOC]	$621

4432-0056	Hale EZ-Fill foam system for a single foam tank. Includes clear hose wand (ship loose). Controller and connection port located [#LOC]	$2,563
4432-0057	Hale EZ-Fill foam system for dual foam tank. Includes clear hose wand (ship loose). Controller and connection port located [#LOC]	$2,893
4432-0058	Akron Quick Disconnect Foam Pickup Tube on Officer's Side Pump Panel for Eductor Located on: [#LOC]	$437
4432-0059	Elkhart Quick Disconnect Foam Pickup Tube on Officer's Side Pump Panel for Eductor Located on: [#LOC]	$621
4432-0060	Label for ATP Foam Systems	$30
4432-0061	FoamPro foam system refill. Includes clear hose wand (ship loose). Controller and connection port located [#LOC]	$2,898
4432-0063	Hale Foam Logix Air Actuated A/B Selector	$3,408
4432-0064	Hypro Foampro Electric Acutated A/B Selector	$3,200
4432-0065	3" Deck Gun CAFSPRO Compressed Air Foam System	$5,994
4432-0066	Additional 3/4" Foam Tank Valve for 95 Eductor and Dual Foam Cells	$420
4432-0074	.375 Foam Maniflod Drain	$120
4432-0075	FoamPro Advanced Digital Controller	$123
4432-0077	Foam Pickup 10 feet with 1.0 PVC Clear Spiraflex Hose IPOS	$219
4432-0078	Foam tank drain plumbed to side panel with valve and 3/4" male garden hose connection. To allow filling of remote foam unit and pails from tank.	$791
4432-0079	A/B Class 1 Manual Foam Selector	$3,013
4432-0080	Special CAFS/FOAM Manifold for (4) preconnects, Deck Gun, and 3" Right Rear discharge.	$5,542
4432-0082	Foam Pickup 2" on Side Pump Panel. With Manual valve and Pickup Tube.	$736
4432-0083	Deck Gun Foam Tank To Pump Connection Provide a Manual 1.5" Valve Locate Next to Deck gun outlet.	$738
4432-0089	CAFS Manual Air Valve to be .3/4" Valve in place of standard.	$125
4432-0090	CAFS/Foam System Operation Label "Operate only (2) 1 3/4" Discharges or (1) 2 1/2" at a time"	$166
4432-0091	Special Design 5" Foam/Water Manifold with Check Valves.	$3,526
4432-0094	Waterous Electric Acutated A/B Selector	$3,060
4432-0096	Hale Foam Logix Remote Start Switch	$680
4432-0097	.75 Foam Maniflod Drain with 1/4 turn valve.	$420
4432-0099	Foam System Plumbed to [#LOC]	$275
4432-0100	2.0" Compressed Air Foam System Discharge Kit with Electric actuated 1/2" valve. Location: [#LOC]	$311
4432-0101	2.5" Compressed Air Foam System Discharge Kit with Electric actuated 3/4" valve. Location: [#LOC]	$314
4432-0104	Hale Manual Single Foam Flush System.	$1,066
4432-0105	A/B Foam Selector locate Driver side walk way recess in box on diamond plate panel at front of module.	$158
4435-0001	Class 1 Intelli-Tank Water Tank Level Gauge	$449
4435-0002	Class 1 Intelli-Tank Foam Tank Level Gauge	$464
4435-0003	Class 1/Whelen 500 Water Tank Level Gauge Package Location of Whelen 500 Tank Level Lights: [#LOC]	$3,647
4435-0004	Sight Tube Water Tank Level Gauge. Located driver's side front of body.	$462
4435-0005	Innovative Controls 5 Water Tank Level Gauge	$421
4435-0006	Innovated Contols 5 Foam Tank Level Gauge	$659
4435-0007	Class 1 Water Bar graph style Tank Level Gauge	$707
4435-0008	Class 1 foam Bar graph style Tank Level Gauge	$937
4435-0009	Fire Research Tank Vision model WL2600 A Foam Tank Level Gauge	$870
4435-0010	Fire Research Tank Vision model WL2000 Water Tank Level Gauge	$757
4435-0011	Fire Research Tank Vision model WL2700 B Foam Tank Level Gauge	$869
4435-0012	Pump Overheat Gauge Indicator	$334
4435-0013	Class 1 Pressure 4.5" Gauge (30-0-600 PSI)	$177
4435-0014	Dual Read 4.5" Pressure Gauge (30-0-600 psi/100-0-4140 KPA)	$265
4435-0015	2.5" Class 1 Pressure Gauge (30-0-600). Discharge: [#LOC]	$126
4435-0016	Dual Read 2.5" Pressure Gauge (30-0-600 psi/100-0-4140 KPA). Discharge: [#LOC]	$179
4435-0018	Dual Read 3.5" Pressure Gauge (30-0-600 psi/100-0-4140 KPA). Discharge: [#LOC]	$243
4435-0019	3.5" Class 1 Pressure Gauge (30-0-600). Discharge: [#LOC]	$151
4435-0020	MC Gauge Heater Line controls and stripes for 4 gauges	$685
4435-0021	Gauge Heater Strips Additional (EA)	$129
4435-0022	6" NoShock Pressure Gauge	$621
4435-0023	4" NoShock Pressure Gauge	$188
4435-0024	6" Class 1 Pressure Gauge (30-0-600)	$611
4435-0025	Flowminder Super System. Discharge: [#LOC]	$2,532
4435-0026	Flowminder System with Totalizer. Discharge: [#LOC]	$1,637
4435-0027	Flow Meter Value System. Discharge: [#LOC]	$1,501
4435-0030	Transmission Temperature Gauge	$230
4435-0031	Pump hourmeter on pump operators panel.	$143
4435-0033	Ammeter Gauge on Pump Operator's Panel	$261
4435-0034	Fuel Level Gauge on Pump Operator's Panel	$316
4435-0035	Enfo III System on Pump Operator's Panel	$957
4435-0036	Engine Gauge Package for Electronic Engine	$663
4435-0038	Class 1 Engine Status Center on Pump Operator's Panel	$1,574
4435-0040	FRC Tachplus engine monitoring display.	$1,291
4435-0047	Class 1 Tank Level Intel Water Gauge Additional Location: [#LOC]	$516
4435-0049	Class 1 Tank Level Water LED graph Gauge Additional Location: [#LOC]	$707
4435-0050	FRC Tank Level Water Tank Vision Gauge Additional Location: [#LOC]	$481
4435-0051	Innovated Controls 5 Light Tank Level Water Gauge Additional Location: [#LOC]	$631
4435-0052	Class 1 Tank Level Water Mini Gauge Additional Location: [#LOC]	$472
4435-0053	FRC Tank Level Water Tank Vision model WLA205-A00 Mini Gauge Location: [#LOC]	$358
4435-0054	Innovated Controls 5 Light Tank Level Water Mini Gauge Location: [#LOC]	$493
4435-0055	Class 1 Tank Level Intelli Foam Gauge Additional Location: [#LOC]	$516

4435-0056	Class 1 Tank Level Foam Mini Gauge Additional Location: [#LOC]	$472
4435-0057	FRC Tank Level A Foam Tank Vision model WLA205-A00 Mini Gauge Additional Location: [#LOC]	$430
4435-0058	FRC Tank Level B Foam Tank Vision model WLA205-A00 Mini Gauge Location: [#LOC]	$430
4435-0059	Innovated Controls Tank Level Foam Mini Gauge Additional Location: [#LOC]	$493
4435-0063	Duplex Master Gauge for CAFS or Industrial Foam Systems.	$477
4435-0065	2.5" NoShok Pressure Gauge (30-0-600) For: [#LOC]	$137
4435-0066	IC5/Whelen 500 Water Tank Level Gauge Package Location of Whelen 500 Tank Level Lights: [#LOC]	$3,620
4435-0067	Class 1/Whelen PSTank Water Tank Level Gauge Package. Location of Whelen PSTank Strip-Lights: [#LOC]	$1,717
4435-0068	IC5/Whelen PSTank Water Tank Level Gauge Package Location of Whelen PSTank Strip-Lights: [#LOC]	$1,690
4435-0069	Enfo IV System on Pump Operator's Panel	$858
4435-0070	Fire Research Tank Vision model WL2600 class A and WL2700 class B Foam Tank Level Gauges	$1,736
4435-0071	FRC Tank Vision model WLA205-A00 Tank Level A and B Foam Gauges Location: [#LOC]	$858
4435-0072	Fire Research Tank Vision Water Tank Level Gauge with Automatic Tank Filling System model ATA400 Location: [#LOC]	$2,655
4435-0074	FRC Water Tank Level Gauge with Driver for Spartan Chassis only.	$1,007
4435-0083	Innovative Controls 10 LED SL series Water Tank Level Gauge	$459
4435-0084	Innovated Contols 10 LED series Foam Tank Level Gauge	$659
4435-0085	Innovated Controls 10 LED SL series Tank Level Water Gauge Additional Location: [#LOC]	$631
4435-0086	Innovated Controls 10 LED series Tank Level Water Mini Gauge Location: [#LOC]	$493
4435-0087	Innovated Controls IC 10 LED SL series Tank Level Foam Mini Gauge Additional Location: [#LOC]	$493
4435-0088	IC 10 LED SL series/Whelen 500 Water Tank Level Gauge Package Location of Whelen 500 Tank Level Lights: [#LOC]	$3,620
4435-0089	IC 10 LED SL series/Whelen PSTank Water Tank Level Gauge Package Location of Whelen PSTank Strip-Lights: [#LOC]	$1,690
4435-0092	2.5" Class 1 Pressure Gauge (30-0-400). Discharge: [#LOC]	$126
4435-0093	3.5" Class 1 Pressure Gauge (30-0-400). Discharge: [#LOC]	$151
4435-0094	Class 1 Pressure 4.5" Gauge (30-0-400 PSI)	$177
4435-0095	2.5" Pressure Gauge (30-0-400). Discharge: [#LOC] Color: [#COL]	$220
4435-0096	3.5" Pressure Gauge (30-0-400). Discharge: [#LOC] Color: [#COL]	$227
4435-0097	4.5" Pressure Gauge (30-0-400). Color: [#COL]	$233
4435-0101	2.5" Span Pressure Gauge (30-0-600). Discharge: [#LOC]	$119
4435-0102	3.5" Span Pressure Gauge (30-0-600). Discharge: [#LOC]	$148
4435-0103	Span Pressure 4.5" Gauge (30-0-600 PSI)	$171
4435-0104	MC Series 2000 4 Light Water Tank Level Gauge	$596
4435-0105	MC Series 2000 4 Light Series Foam Tank Level Gauge	$748
4435-0106	Dual Scale 3.5" Pressure Gauge 0-400 PSI / 100-2758 KPA. Replaces Standard	$296
4435-0108	Digital Pressure Gauge IPO Duplex Gauge	$761
4435-0109	2.5" Class 1 Pressure Gauge (30-0-600). IPO Duplex	$126
4435-0110	Pump Overheat Gauge Indicator with Audible Alarm	$426
4435-0111	MC Series 500 4 LED Series Water Tank Level Gauge	$706
4435-0112	Class 1 Pressure 4.5" Gauge (30-0-300 PSI)	$177
4435-0113	FRC Vision/Whelen PSTank Water Tank Level Gauge Package Location of Whelen PSTank Strip-Lights: [#LOC]	$2,279
4435-0114	Digital CAFS CFM Flow Meter	$1,935
4435-0115	2.5" NoShok Pressure Gauge (-30-0-600 PSI/100-0-4140KPA) For: [#LOC]	$152
4435-0116	4" NoShock Dual Read Pressure Gauge 30-0-600PSI/100-0-4140KPA	$199
4435-0117	FRC Tank Level Foam Tank Vision Gauge Additional Location: [#LOC]	$546
4435-0118	4" NoShock Dual Read Pressure Gauge 30-0-400PSI/100-0-2750KPA	$199
4435-0119	2.5" NoShok Pressure Gauge (0-400 PSI/-0-2700KPA) For: [#LOC]	$152
4435-0120	Duplex Master Gauge (0-400 PSI) for CAFS or Industrial Foam Systems.	$477
4435-0122	Fire Research Tank Vision model WL2000 Water Tank Level Gauge w/an audible alarm low level buzzer shall be installed. The buzzer shall sound when the tank volume indicator drops to 1/4 tank.	$903
4435-0123	FRC Insight model FPA410 Ultimate Pressure Gauge LPM/KPA Location: [#LOC]	$1,908
4435-0124	Class 1 Pressure 6" Gauge (30-0-400 PSI)	$599
4435-0125	Class Digital Pressure Gauge Discharge: [#LOC]	$761
4435-0126	Digital Master Pressure Gauge	$726
4435-0127	3.5" Span Pressure Gauge (0-400). Discharge: [#LOC]	$153
4435-0128	Dual Read 2.5" Span Pressure Gauge (0-300 psi/0-2050KPA). Discharge: [#LOC]	$169
4435-0129	Dual Read 6.0" Span Pressure Gauge (30-0-400 psi/100-0-2750 KPA)	$348
4435-0130	FRC Insight model FPA400 Ultimate Master Flow Gauge	$1,471
4435-0131	2.5" Class 1 Pressure Gauge (0-300). Discharge: [#LOC]	$134
4435-0133	FRC/Whelen 500 Water Tank Level Gauge Package Location of Whelen 500 Tank Level Lights: [#LOC]	$3,587
4435-0134	FRC Foam Tank Level Gauge "Class B Foam" with Driver for Spartan Chassis only.	$1,137
4435-0135	Class 1 Intelli/Whelen PSTank Water Tank Level Gauge Package Location of Whelen PSTank Strip-Lights: [#LOC]	$2,160
4435-0139	Span Pressure 4.5" Gauge (0-400 PSI)	$177
4435-0140	Span Master Intake/Pressure 4.5" 50/50 Gauge (30-0-300)	$298
4435-0147	Innovative Controls 14 LED SL series Water Tank Level Gauge	$465
4435-0149	IC 14 LED SL series/Whelen 500 Water Tank Level Gauge Package Location of Whelen 500 Tank Level Lights: [#LOC]	$3,650
4435-0151	4.5" Class 1 Pressure Gauge (30-0-600) Black Face w/White letters.	$188
4435-0152	2.5" Class 1 Pressure Gauge (30-0-600). Discharge with Black Face and White Letters: [#LOC]	$134
4440-0005	2.5" Left Intake Akron Manual Valve	$1,020
4440-0006	2.5" Right Intake Akron Manual Valve	$1,020

4440-0010	3" Left Intake Akron Manual Valve	$1,675
4440-0011	3" Right Intake Akron Manual Valve	$1,713
4440-0014	5" Front Intake without Valve	$3,249
4440-0015	5" Front Intake w/5" Air Actuated Valve and Relief	$5,124
4440-0025	5" Front Intake with no Valve Plumbed Thru Front Bumper	$3,632
4440-0026	5" Front Intake w/5" Air Actuated Valve and Relief Plumbed Thru Front Bumper	$5,508
4440-0027	2.5" Left Intake Hale Manual Valve	$1,040
4440-0028	2.5" Right Intake Hale Manual Valve	$1,223
4440-0029	3" Right Intake Hale Manual Valve	$2,166
4440-0031	3" Left Intake Hale Manual Valve	$1,700
4440-0036	2.5" Left Intake Elkhart Manual Valve	$1,159
4440-0037	3" Left Intake Elkhart Manual Valve	$1,877
4440-0040	2.5" Right Intake Elkhart Manual Valve	$1,159
4440-0041	3" Right Intake Elkhart Manual Valve	$1,916
4440-0061	5" Front Intake w/5" Akron Electric Actuated Valve and Relief	$6,416
4440-0062	5" Front Intake w/5" Elkhart Electric Actuated Valve and Relief	$6,419
4440-0064	2.5" Left Intake w/3" Akron Manual Valve	$1,560
4440-0065	2.5" Left Intake w/3" Hale Manual Valve	$1,743
4440-0066	2.5" Left Intake w/3" Elkhart Manual Valve	$1,757
4440-0067	2.5" Right Intake w/3" Akron Manual Valve	$1,560
4440-0068	2.5" Right Intake w/3" Hale Manual Valve	$1,743
4440-0069	2.5" Right Intake w/3" Elkhart Manual Valve	$1,757
4440-0074	5" Front Intake without Valve Low "S" in Tray	$3,165
4440-0075	5" Front Intake w/5" Air Actuated Valve and Relief Low "S" in Bumper Tray	$5,040
4440-0078	2.5" Left Intake Elkhart Unibody TM Control Manual Valve	$1,263
4440-0079	3.0" Intake Elkhart Unibody TM Control Manual Valve	$1,952
4440-0082	2.5" Left Intake Akron Manual Valve With Integral 30 Degree Droop	$1,086
4440-0083	2.5" Right Intake Akron Manual Valve With Integral 30 Degree Droop	$1,086
4440-0084	5" Front Intake w/5" Manual Gear Actuated Valve and Relief	$6,010
4440-0089	5" Front Intake w/5" Electric Actuated Valve and Relief Low "S" in Bumper Tray	$6,333
4440-0092	3" Left IntakeElkhart Unibody Manual Valve	$1,675
4440-0093	3" Right Intake Elkhart Unibody Manual Valve	$1,713
4440-0094	2.5" Left Intake Elkhart Unibody Manual Valve	$1,020
4440-0095	2.5" Right Intake Elkhart Unibody Manual Valve	$1,020
4440-0096	5" Front Intake w/4" Hale Electric Actuated Valve and Relief Low "S" in Bumper Tray	$6,310
4440-0097	2.5" Right Intake Elkhart Unibody Manual Valve	$1,020
4440-0098	5" Front Intake w/5" Akron Electric Actuated Valve and Relief	$6,416
4440-0103	5" Front Intake w/5" Elect Actuated Valve and Relief Plumbed Thru Front Bumper	$6,416
4445-0004	Front Intake Swivel 5" Polished Chrome	$1,930
4445-0005	Front Intake Swivel 6" Polished Chrome	$2,006
4445-0006	Intake Adapter 5" FNPT x 4.5" MNST for Front Intake	$391
4445-0007	Intake Adapter 5" FNPT x 6" MNST for Front Intake	$483
4445-0008	Valve Relief Intake - Elkhart	$577
4445-0009	Valve Relief Intake - Akron	$422
4445-0011	Valve Relief Intake - Ross 2.5"	$1,750
4445-0013	2.5" Check Valve for [#LOC] Intake	$364
4445-0014	3" Check Valve for [#LOC] Intake	$624
4445-0015	6" Check Valve for [#LOC] Steamer	$607
4445-0016	Valve Relief Intake - Hale 2.5"	$582
4445-0018	Intake relief valve outlet to be extended to the side of the truck under the runningboard. Includes tag that reads "Intake Pressure Relief Outlet - Do Not Cap".	$261
4445-0019	Intake Adapter 5" FNST x 4.5" MNST for Front Intake	$391
4445-0020	Intake Adapter 5" FNST x 6" MNST for Front Intake	$483
4445-0024	Intake Adapter 5" FNPT x 5" MNST for Front Intake	$358
4445-0028	Intake bleeder/drain valve to be extended to the side of the truck.	$51
4445-0030	Intake Adapter 5" FNST x 4" MNST for Front Intake	$391
4445-0038	Waterous Intake Pressure Relief Valve.	$1,336
4445-0039	Intake Adapter 2-1/2"MNST X 3" FNST Swivels with plug.	$221
4450-0007	1" Tank Fill Akron Manual Valve	$370
4450-0008	1.5" Tank Fill Akron Manual Valve	$843
4450-0009	1.5" Tank Fill Hale Manual Valve	$977
4450-0010	2" Tank Fill Akron Manual Valve	$1,013
4450-0011	2.5" Tank Fill Akron Manual Valve	$1,085
4450-0012	1.5" Tank Drain Akron Manual Valve	$739
4450-0021	3" Dual Tank to Pump Akron Manual Valves - Side Panel Controlled	$1,445
4450-0022	3" Tank to Pump Akron Manual Valve	$1,068
4450-0023	3" Tank to Pump Akron Air Actuated Valve	$1,495
4450-0034	2.5" Tank Fill "AutoFill" Automatic Tank Fill Valve Location: [#LOC]	$3,927
4450-0035	2.5" Direct Tank Fill Location: [#LOC]	$1,127
4450-0038	4" Air Tank to Pump for Cafspro Foam System	$4,047
4450-0054	2.5" Tank Fill Hale Manual Valve	$1,427
4450-0055	Hale 4" Manual Tank-to-pump	$3,053
4450-0056	3" Air Tank to Pump for Cafspro Foam System	$2,093
4450-0057	3" Tank to Pump Hale Manual Valve	$1,217
4450-0058	2.0" Tank Fill Hale Manual Valve	$1,160

4450-0059	1.5" Tank Fill Elkhart Manual Valve	$917
4450-0060	2" Tank Fill Elkhart Manual Valve	$1,087
4450-0061	2.5" Tank Fill Elkhart Manual Valve	$1,223
4450-0062	3" Tank to Pump Elkhart Manual Valve	$1,272
4450-0066	Tank-to-pump 4" Akron Air Valve	$3,255
4450-0067	Tank-to-pump 4" Arkon Electric Valve	$3,329
4450-0068	3" Tank to Pump w/3.5" Waterous Valve	$1,632
4450-0070	2.5" Tank Fill Hale Electric Valve	$2,558
4450-0071	Tank-to-pump 4" Hale Electric Valve	$4,197
4450-0072	2.5" Tank Fill Direct Akron Electric Valve Location: [#LOC]	$2,966
4450-0073	3" Tank to Pump w/3.5" Waterous Electric Valve	$3,155
4450-0074	2" Tank Fill Akron Valve Handwheel Control	$1,970
4450-0075	2" Tank Fill Elkhart Valve Handwheel	$2,017
4450-0076	2.5" Tank Fill Akron Valve Handwheel Control	$2,041
4450-0077	2.5" Tank Fill Elkhart Valve Handwheel Control	$2,087
4450-0078	3" Dual Tank to Pump Akron Air Valves	$2,378
4450-0082	1.5" Tank Drain Hale Manual Valve	$833
4450-0083	1.5" Tank Drain Elkhart Manual Valve	$811
4450-0085	3" Tank to Pump Elkhart Unibody Manual Valve	$1,352
4450-0086	2" Tank Fill Elkhart Unibody Manual Valve	$1,090
4450-0089	Tank-to-pump 3" Elkhart Electric Valve	$2,775
4450-0090	1.5" Direct Tank Fill Elkhart Unibody Manual Valve Left Side Panel	$1,012
4450-0091	2.5" Direct Tank Fill "AutoFill" Automatic Tank Fill Valve Location: [#LOC]	$4,072
4450-0092	3" Tank to Pump Akron Valve Hand Wheel Control.	$2,204
4450-0093	Tank-to-pump 3" Akron Electric Valve	$3,107
4450-0099	3" Tank to Pump Elkhart Unibody Air Actuated Valve	$1,505
4450-0105	3" Tank Fill Akron Manual Valve	$1,427
4450-0107	Direct 2.5" Water Tank Fill with 3" Elkhart Manual Valve. Location: [#LOC]	$1,574
4450-0109	2.5" Tank Fill Direct Akron Electric Valve Location: [#LOC]	$2,966
4450-0110	Tank-to-pump 4" Akron Electric Valve	$3,329
4450-0114	3" Tank to Pump Electric Over Air Actuated Valve	$1,585
4450-0117	Tank-to-pump 4" Elkhart Unibody Electric Valve	$3,329
4450-0119	3" Tank To Pump Akron Manual Valve w/4" Plumbing	$1,088
4450-0121	3" Tank To Pump Akron Air Actuated Valve w/4" Plumbing	$1,495
4450-0122	3" Tank To Pump Akron Electric Actuated Valve w/4" Plumbing	$3,072
4450-0123	3" Tank Fill Direct Akron Electric Valve Control at Pump Operator Panel Valve Location: [#LOC]	$2,998
4450-0124	3" Tank To Pump Elkhart Unibody Manual Valve w/4" Plumbing	$1,142
4450-0125	3" Tank To Pump Elkhart Unibody Air Actuated Valve w/4" Plumbing	$1,581
4450-0127	2.5" Tank Fill "AutoFill" Automatic Tank Fill Valve with Intelli tank level gauge located behind officer side pump panel. Location: [#LOC]	$3,927
4450-0132	3" Tank To Pump Elkhart Unibody Electric Actuated Valve w/4" Plumbing	$3,087
4450-0133	3" Tank To Pump Akron Air Actuated Valve w/4" Plumbing	$1,495
4450-0134	3" Tank To Pump Akron Manual Valve w/4" Plumbing	$1,088
4450-0146	Tank-to-pump 3" Elkhart Unibody Electric Valve	$2,775
4460-0000	Air Outlet Valve Location: [#LOC]	$245
4460-0001	Air Blowout For: [#LOC]	$230
4460-0002	Hose Reel Blow-out Primary	$234
4460-0005	Fire Shop Bezel Chrome - Standard 2.5" Gauge	$35
4460-0006	Radiator Fill Valve on Pump Panel	$270
4460-0007	Air Outlet Valve w/25' Hose Location: [#LOC]	$275
4460-0008	Air Outlet Valve to operate off of CAFS System Compressor Location: [#LOC]	$339
4460-0009	Pump Panel Tags - Special Color (Must Specify)	$291
4460-0010	Pump Panel Tags - Special Label (Must Specify)	$248
4460-0017	Class 1 Color Coded Bezel Chrome - 2.5" Gauge	$22
4460-0018	Class 1 Color Coded Bezel Chrome - 3.5" Gauge	$25
4460-0023	Span Color Coded Bezel - 2.5" Gauge	$6
4460-0024	Span Color Coded Bezel - 3.5" Gauge	$6
4460-0026	CAFS Air Outlet Valve Recess Driver side Pump Panel wiyh door.	$343
4460-0032	Push/Pull Rod Extrusion at pump panel to be thru bolted with nuts IPOS nut cert.	$85
4460-0033	CAFS Air outlet .75 valve with Handle and Quick Disconnect. Location: [#LOC]	$382
4465-0001	Fire Commander pressure governor. Includes engine gauges. Detroit S60 only.	$4,282
4465-0003	FRC In-Control pressure governor. Includes engine and master pump gauges.	$5,071
4465-0005	Class1 Captain pressure governor.	$2,683
4465-0007	Class1 Command Master pressure governor. Includes pump intake pressure and discharge pressure, throttle, relief, tank level(s), water, oil, volt and tachometer.	$4,913
4465-0008	FRC PumpBoss Pressure Governor. Includes engine gauges.	$2,493
4465-0009	FRC Pro-S Pressure Governor	$2,632
4465-0010	FRC In-Control pressure governor TGA200. Includes engine transmission and master pump gauges.	$5,126
4465-0011	Class1 TPG pressure governor. Includes , throttle, relief, water, oil, volt and tachometer.	$2,366
4465-0012	Fire Commander II pressure governor. Includes engine gauges, Pump Ditigal Master Gauges. Detroit S60 only.	$4,905
4465-0013	FRC In-Control pressure governor. Includes engine and master pump gauges.The discharge pressure display shall show pressures from 0 to 4000 kPa. The intake pressure display shall show pressures from -100 to 4000 kPa.	$5,071
4465-0015	FRC In-Control pressure governor TGA300. Includes engine, transmission, and master pump gauges.	$3,733

4465-0017	FRC PumpBoss Pressure Governor PBA400. Includes engine gauges.	$2,493
4465-0018	FRC In-Control pressure governor TGA400. Includes engine, transmission, and master pump gauges.	$3,733
4475-0000	Pump certification 750-2250 GPM	$2,378
5000	**Electrical**	
5010-0003	Multiplex modem kit. Includes cable, modem, and adapter harness.	$841
5010-0004	Multiplex Data Logger	$596
5010-0005	Multiplex electrical system for aerials.	$5,341
5010-0008	Electrical system w/Load Manager for Tiller	$3,784
5010-0013	Vehicle data recorder - 2009 NFPA compliant. Includes occupant detection with display. Display location: [#LOC].	$4,000
5010-0015	Additional CrewGuard display for use with VDR. Location: [#LOC].	$454
5010-0017	Multiplex electrical system for Tiller aerial.	$6,441
5100-0000	Foot Switch to control air horns located [#LOC]	$107
5100-0001	Switch circuit three way. Includes (1) additional switch. An additional switch required for more than two locations. Location: [#LOC].	$151
5100-0002	Momentary switch with 6' pendant for cab tilt. Yellow weatherproof push button at end of coiled cord. Location of switch plug-in: [#LOC]	$341
5100-0006	Foot Switch to control Q2B located [#LOC]	$107
5100-0007	Foot Switch to control electronic siren located [#LOC]	$107
5100-0009	Audible door ajar alarm wired thru door ajar light.	$54
5100-0010	Additional push button hose reel switch. Location: [#LOC]	$168
5100-0011	Switch 12V for 110-240V (EA). Location: [#LOC].	$391
5100-0014	Air horns to be interlocked through the master warning switch.	$90
5100-0015	Back-up alarm override momentary switch located at the cab dash. The switch will allow for overriding the back-up alarm and reset after transmission is shifted again.	$51
5100-0019	Additional amber warning light override momentary switch located at the cab warning light switch panel. The switch will allow for overriding the rear additional amber warning lights and reset after ignition is turned off.	$294
5100-0021	Opticom switch wired through upper level warning switch.	$68
5100-0022	Push-button hose reel switch. Location: [#LOC]	$168
5100-0036	Additional programming instructions: [#LOC].	$112
5100-0038	Hose Reel rewind switch located in rubrail.	$85
5100-0039	Foot switch(es) mounted on a 45 degree bracket.	$73
5100-0042	Ramsey control with 3' cord for cab tilt. Red/Black weatherproof push buttons at end of cord. Location of switch plug-in: [#LOC]	$341
5100-0044	Rear cab heater switch. Function and location: [#LOC].	$183
5100-0045	Thermostatic controls for pump compt heaters. Thermostat set at freezing temp.	$230
5100-0046	Cut-off switch for Q2B main power. Switch to be accessible from driver's seat.	$249
5100-0047	Switch household 110V w/ weaterproof cover. Location and function: cab mounted next to air compressor for 120V air compressor	$183
5100-0048	Magnetic door ajar switches IPO std for all body compt doors.	$664
5100-0049	Ramsey control with 8' cord for cab tilt. Red/Black weatherproof push buttons at end of cord. Location of switch plug-in: [#LOC].	$341
5100-0050	Push button testswitch for tank level gauge, push button wired "hot" to batteries to allow checking tank level in fire station without having to power up truck electrical system. Located on operator pump panel.	$318
5100-0056	Hose deployment switch in front bumper tray. Includes hinged plate on bottom of bumper tray with switch on floor and indicator light on pump panel. Requires tray without slats. Location: [#LOC].	$539
5100-0059	Back-up alarm / rear back up lights override momentary switch located at the cab dash. The switch will allow for overriding the back-up alarm & back-up lights and reset after transmission is shifted again.	$51
5110-0003	High impact orange ABS plastic handheld spotlight SL-45 Location: [#LOC]	$201
5110-0004	Flasher Alternating for Headlights	$311
5110-0007	Audible indicator in cab with rear button. The rear button will be located on the driver's side at the rear behind the handrail (if equipped).	$319
5110-0008	Audible indicator in cab with rear buttons. The rear buttons will be located, one each side at the rear, behind the handrail (if equipped).	$351
5110-0009	Clock Digital 12/24 Waterproof mounted in cab officer's overhead dash.	$581
5110-0011	Vehicle Information Control Center for E-One Multiplexed trucks located on Driver's Side.	$5,529
5110-0012	Vehicle Information Control Center for E-One Multiplexed trucks located on Officer's Side.	$5,529
5110-0013	Vehicle Information Control Center for E-One Multiplexed trucks located on Driver's Side. Display Only, No computer.	$2,348
5110-0014	Vehicle Information Control Center for E-One Multiplexed trucks located on Officer's Side. Display Only, No computer.	$2,348
5110-0015	Vehicle Information Control Center for E-One Multiplexed trucks located at center of engine cover mounted on swivel bracket.	$5,876
5110-0016	Emi Testing and Certification	$3,753
5110-0017	Back up alarm 97 dB(A).	$93
5110-0018	12 volt 12 gauge constant hot lead (24" long) with ground wire. Location: [#LOC].	$73
5110-0019	Audible indicator in cab with rear button. Locate (1) buzzer in tractor cab wired to foot switch on right side of tiller cab. (1) buzzer in tiller cab wired to push button switch in tractor cab center of dash. Includes indicator lights wired to each buzze	$918
5110-0020	Starter safety circuit for tillerman cab. Locate on the driver side floor of tillerman cab. Includes service override switch under cab dash within easy reach of driver position.	$545
5110-0024	Back up alarm Grote 107 dB(A).	$243
5110-0026	12 volt 12 gauge wired through ignition lead (24" long) with ground wire. Location: [#LOC].	$73
5110-0032	Clock Digital 12/24 Waterproof mounted in [#LOC]	$581
5110-0037	Additional wiring instructions: [#LOC].	$337

5110-0039	Clock Digital 12/24 Waterproof mounted in cab officer's switch panel.	$581
5110-0040	Indicator light. Color: [#COL]. Location and function: [#LOC].	$105
5110-0043	Back up alarm Federal Reactor Model 210350 self adjusting.	$164
5110-0052	12V power distribution module. Includes (6) battery hot and (6) switched hot circuits. 100 amps max (IATS). Location: [#LOC]	$282
5110-0060	12 volt 4 gauge constant hot lead (24" long) with ground wire. Location: [#LOC].	$222
5110-0065	Lighted bumper guide (PR). Bores model 848211 located (1) each side of front bumper extension.	$376
5110-0067	Back up alarm Preco 97 dB(A) warble tone.	$247
5130-0001	Cord reel electric with 200' of 10/3 black cable. Locate [#LOC]	$1,987
5130-0002	Cord reel electric with 200' of 10/3 yellow cable. Location(s): [#LOC]	$2,243
5130-0003	Cord reel electric with 200' of 10/4 black cable. Location: [#LOC]	$2,237
5130-0004	Cord reel electric with 200' of 10/4 yellow cable. Location [#LOC]	$2,902
5130-0005	Ground reel with 20' of cable and 3' rod to be used for grounding unit while using the generator.	$380
5130-0006	Cord reel rollers mounted on reel in [#LOC]	$323
5130-0007	Cord connector. Daniel Woodhead 3 wire NEMA 5-15 straight blade female located on cord for reel in [#LOC]	$74
5130-0008	Cord connector. Daniel Woodhead 3 wire NEMA L5-15 twist lock female located on cord for reel in [#LOC]	$76
5130-0009	Cord connector. Daniel Woodhead 3 wire NEMA L5-20 twist lock female located on cord for reel in [#LOC]	$104
5130-0010	Cord connector. Daniel Woodhead 4 wire NEMA L14-20 twist lock female located on cord for reel in [#LOC]	$104
5130-0011	Cord connector. Daniel Woodhead 3 wire NEMA L6-20 twist lock female located on cord for reel in [#LOC]	$104
5130-0012	Junction box Circle-D with four (4) 3-wire Nema L5-15 110Volt 15 Amp twist lock receptacles. Located on cord for reel in [#LOC]	$684
5130-0013	Junction box Circle-D with four (4) 3-wire Nema L5-20 110Volt 20 Amp twist lock receptacles. Located on cord for reel in [#LOC]	$684
5130-0014	Circle D wall/floor mounting box. Locate box for use with reel in or on [#LOC]	$133
5130-0015	Junction box Circle-D with two (2) 15 amp straight blade and two (2) 20 amp twist lock receptacles. Located on cord for reel in [#LOC]	$863
5130-0016	Junction box Circle-D with all twist lock, 2-120V and 2-240V outlets. Located on cord for reel in [#LOC]	$846
5130-0017	Junction box Woodhead with four (4) wire NEMA L5-15 110 Volt 15 Amp twist lock receptacles. Located on cord for reel in [#LOC]	$1,360
5130-0018	Junction box Woodhead with four (4) wire NEMA L5-20 110 Volt 20 Amp twist lock receptacles. Located on cord for reel in [#LOC]	$1,087
5130-0022	Cord reel rollers mounted thru panel. Location(s): [#LOC]	$323
5130-0024	Electric cord reel rewind switch. Switch located [#LOC].	$107
5130-0026	Cord connector. Fire Power 3 wire 20A/110V female located on cord for reel in [#LOC]	$547
5130-0027	Cord connector. Duraline 4 wire 20A/220V female located on cord for reel in [#LOC]	$143
5130-0028	Cord reel rollers mounted on reel.	$323
5130-0030	Junction box Circle-D with one (1) straight blade and three (3) twist lock receptacles. Located on cord for reel in [#LOC]	$863
5130-0031	Cord reel electric/manual back-up with 200' of 10/3 black cable. Crank handle mounted next to reel. Locate [#LOC]	$2,387
5130-0032	Cord reel electric with 150' of 10/4 yellow cable. Location [#LOC]	$2,902
5130-0033	Junction box Circle-D with four (4) 3-wire Nema 5-15 110Volt 15 Amp straight blade receptacles. Located on cord for reel in [#LOC]	$684
5130-0034	Cord reel Akron electric with 200' of 10/3 yellow cable. Location(s): [#LOC]	$2,142
5130-0035	Junction box Circle-D with (3) L5-15 and (1) L5-20 110Volt twist lock receptacles. Located on cord for reel in [#LOC].	$684
5130-0036	Diamond plate cord reel cover over reel. Location: [#LOC]	$565
5130-0037	Cord reel Akron electric with 200' of 10/4 yellow cable. Location(s): [#LOC]	$2,802
5130-0038	Junction box Circle-D with (2) L5-20 twist lock and (2) 5-20 110Volt straight blade duplex receptacles. Located on cord for reel in [#LOC].	$684
5130-0039	Roller support bracket up high at compt opening for reel in [#LOC].	$244
5130-0040	Hannay PWM (Pulse Width Modulator) control for reel. Mounted next to switch for cord reel in [#LOC].	$608
5130-0042	Junction box Circle-D with four (4) 3-wire Nema 5-20 110Volt 20 Amp duplex receptacles. Located on cord for reel in [#LOC].	$757
5130-0043	Cord reel Akron electric with rear mounted motor. Includes 200' of 10/3 yellow cable. Location(s): [#LOC].	$2,441
5130-0044	Junction box Akron with (2) 5-20 125v 20 Amp duplex recepts and (2) L5-20 125v 20 Amp twist lock recepts. Located on cord for reel in [#LOC].	$537
5130-0045	Akron model EJB-VMT-TP mounting box. Locate box for use with reel in or on [#LOC].	$261
5130-0046	Junction box Circle-D with one (1) 5-20 straight blade and three (3) L5-20 twist lock receptacles. Box wired as 240v with individual circuit breakers on box. Located on cord for reel in [#LOC].	$863
5130-0048	Junction box Circle-D with (2) NEMA 5-20 120V GFCI duplex and (2) NEMA L6-20 220V twist lock receptacles. Located on cord for reel in [#LOC].	$863
5130-0049	Cord reel electric for 200' of 10/3 cable. Cable not included. Location(s): [#LOC]	$2,006
5130-0054	Cord reel electric with 200' of 8/3 black cable. Locate [#LOC]	$3,403
5130-0055	Cord reel rollers mounted on support bracket. Location(s): [#LOC]	$323
5130-0056	Junction box Woodhead with (3) NEMA L5-15 110 Volt 15 Amp twist lock receptacles and (1) NEMA 5-20 110 Volt 20 Amp household receptacle. Located on cord for reel in [#LOC].	$1,360
5130-0057	Mounting box for Woodhead junction box. Locate box for use with reel in or on [#LOC].	$244
5130-0059	Junction box Circle-D with four (4) FirePower FP11 110Volt 20 Amp receptacles. Located on cord for reel in [#LOC].	$1,115
5150-0003	Weldon auxiliary turn signal model 9186-8560 (PR). Location: [#LOC]	$190
5150-0006	Whelen 600 series LED horizontal mount taillights. Includes LED stop/tail, arrow turn and halogen backup lights with horizontal Cast 3 housing and weatherproof connectors.	$1,244
5150-0007	Whelen 600 series LED vertical mount taillights. Includes LED stop/tail, arrow turn and halogen backup lights with vertical Cast 3 housing and weatherproof connectors.	$1,215

5150-0008	Whelen 600 series LED vertical mount taillights. Includes LED stop/tail, arrow turn and halogen backup lights with vertical Cast 4 housing and weatherproof connectors.	$1,488
5150-0010	Whelen 600 series LED horizontal mount taillights. Includes LED stop/tail, turn and halogen backup lights. Available on G067, L193 and Q100/114 only. With weatherproof connectors.	$1,337
5150-0011	Whelen 600 series LED vertical mount taillights. Includes LED stop, tail, turn and halogen backup lights with vertical Cast 3 housing and weatherproof connectors.	$1,308
5150-0012	Whelen 600 series LED vertical mount taillights. Includes LED stop/tail, turn and halogen backup lights with vertical Cast 4 housing and weatherproof connectors.	$1,396
5150-0013	Whelen 600 series horizontal mount taillights. Includes incandescent stop/tail, arrow turn and halogen backup light. Available on G067 and L193 only. With weatherproof connectors.	$585
5150-0014	Whelen 600 series vertical mount taillights. Includes incandescent stop/tail, arrow turn and halogen backup lights with vertical Cast 3 housing and weatherproof connectors.	$527
5150-0015	Whelen 600 series vertical mount taillights. Includes incandescent stop/tail, arrow turn and halogen backup lights with vertical Cast 4 housing and weatherproof connectors.	$675
5150-0017	License plate light LED with chrome housing located at the rear of the body.	$124
5150-0019	Marker lights addtional red LED Trucklite Model 21 (PR). Location: [#LOC]	$160
5150-0020	Weldon Model 1010 LED / incandescent taillights. Includes red LED stop/tail/turn and clear incandescent backup.	$349
5150-0023	Weldon Model 1010 LED / incandescent taillights. Includes red LED stop/tail, amber LED turn and clear incandescent backup.	$508
5150-0026	Marker light LED body/cab package. E-ONE custom cab with aerial ladder, Mid-Mount platform or Bronto bodies only.	$1,326
5150-0032	Bracket license plate	$36
5150-0035	Trucklite LED taillights. Includes 4" red LED stop/tail, amber LED turn and clear incandescent backup.	$616
5150-0036	Trucklite LED taillights. Includes 4" red LED stop/tail, amber LED turn and clear LED backup.	$783
5150-0037	Zico backing light (PR) with white pained housing model #ZQL-RV-H7614. Location: [#LOC].	$367
5150-0039	Marker lights Britax amber/red rubber housed mounted on the rear body corners angled down.	$274
5150-0042	Federal Signal LED taillights. Includes 4" diameter red LED stop/tail, amber turn and LED clear backup.	$533
5150-0050	Zico backing light (PR) with polished stainless steel housing model #ZQL-SS-H7614. Location: [#LOC].	$566
5150-0052	Code 3 65STK4 vertical mount taillights. Includes red LED stop/tail, amber LED turn and white LED backup lights.	$1,895
5150-0053	Code 3 65PKG vertical mount taillights. Includes red LED stop/tail, amber LED turn and white LED backup lights.	$1,542
5150-0055	Whelen 600 series LED horizontal mount taillights. Includes LED stop/tail, arrow turn and backup lights with horizontal Cast 3 housing and weatherproof connectors.	$1,968
5150-0056	Whelen 600 series LED vertical mount taillights. Includes LED stop/tail, arrow turn and backup lights with vertical Cast 3 housing and weatherproof connectors.	$1,940
5150-0057	Whelen 600 series LED vertical mount taillights. Includes LED stop/tail, arrow turn and backup lights with vertical Cast 4 housing and weatherproof connectors.	$2,212
5150-0058	Federal Signal QuadraFlare LED vertical mount taillights. Includes LED stop/tail, arrow turn and backup lights with vertical Cast 4 housing and weatherproof connectors.	$1,212
5150-0059	Federal Signal QuadraFlare LED vertical mount taillights. Includes LED stop/tail, arrow turn and backup lights with vertical Cast 3 housing and weatherproof connectors.	$1,058
5150-0060	Federal Signal QuadraFlare LED vertical mount taillights. Includes LED stop/tail, turn and backup lights with vertical Cast 3 housing and weatherproof connectors.	$1,157
5150-0061	Federal Signal QuadraFlare LED horizontal mount taillights. Includes LED stop/tail, turn and backup lights with horizontal Cast 3 housing and weatherproof connectors.	$1,058
5150-0062	Federal Signal QuadraFlare LED horizontal mount taillights. Includes LED stop/tail, arrow turn and backup lights with horizontal Cast 3 housing and weatherproof connectors.	$1,232
5150-0063	Double chrome trim ring for Weldon 1010 tail lights (PR).	$255
5150-0065	Marker light LED body/cab package. E-ONE custom cab with tiller aerial ladder body only.	$1,410
5150-0068	Marker lights Britax LED amber/red rubber housed mounted on the rear body corners angled down.	$375
5150-0071	Light Whelen model PSR00XRR LED (EA) red 3rd brake light. Location: [#LOC].	$181
5150-0073	Marker lights additional red LED Whelen Model 50R00MRR (PR). Location: [#LOC]	$232
5150-0074	Marker lights additional amber LED Whelen Model 50A00MAR (PR). Location: [#LOC]	$232
5150-0075	Whelen 600 series LED vertical mount taillights. Includes LED stop/tail, arrow turn and backup lights with individual chrome flanges and weatherproof connectors.	$2,623
5150-0076	Whelen 700 LED auxiliary chevron turn signal (PR) with 15 degree castings. Location: [#LOC]	$685
5150-0077	Whelen 900 series LED taillights. Includes LED stop/tail, arrow turn and backup lights with weatherproof connectors.	$4,732
5150-0078	Truck-Lite model #35720 guards for front LED clearance lights on cab.	$85
5150-0080	Weldon auxiliary turn signal model 9186-8580 LED (PR). Location: [#LOC]	$260
5150-0081	Light Whelen 500 model 5SR00XRR red LED 3rd brake light (ea). Location: [#LOC].	$203
5150-0082	Whelen 600 series LED vertical mount taillights. Includes LED stop/tail, arrow turn in vertical Cast 3 housing with 900 series halogen backup lights down low and weatherproof connectors.	$1,614
5150-0084	Weldon LED vertical mount taillights. Includes LED stop, tail, sequential turn and halogen backup lights with vertical 3 housing and weatherproof connectors.	$1,097
5150-0086	Marker light LED body/cab package. E-ONE custom cab with aerial ladder, Mid-Mount platform or Bronto bodies only. Outer cab roof lights to be Weldon model 5060.	$1,326
5150-0087	Weldon LED vertical mount taillights. Includes LED stop, tail, sequential turn and halogen backup lights with vertical 4 housing and weatherproof connectors.	$1,097
5150-0091	Whelen M6 series LED vertical mount taillights. Includes LED stop/tail, arrow turn and backup lights with vertical Cast 4 housing and weatherproof connectors.	$1,538
5200-0000	Breaker box 8 place single phase. Includes main breaker. Note: Main breaker occupies 2 places leaving 6 available. Locate [#LOC].	$795

5200-0001	Breaker box 12 place single phase. Includes main breaker. Note: If gen is 6KW or less, main will occupy 2 places leaving 10 available. Locate [#LOC].	$831
5200-0002	Breaker Box 20 Place Single Phase. Includes main breaker. Locate [#LOC].	$846
5200-0003	Breaker Box 2 Place Single Phase (70A 110/220V). Location [#LOC].	$352
5200-0008	Breaker Box 16 Place Single Phase. Includes main breaker. Locate [#LOC]	$835
5200-0009	Breaker box 8 place single phase; no main breaker. For use with multiple options wired through shoreline power with 30A or larger inlet recept. Locate adjacent to main breaker box.	$619
5250-0005	Generator Onan 6KW hydraulic. Includes generator control / PTO engage switch and a gauge panel located adjacent to breaker box. Generator location: [#LOC].	$17,908
5250-0006	Generator Onan 8KW hydraulic. Includes generator control / PTO engage switch and a gauge panel located adjacent to breaker box. Generator location: [#LOC].	$20,539
5250-0007	Generator Onan 10KW hydraulic. Includes generator control / PTO engage switch and a gauge panel located adjacent to breaker box. Generator location: [#LOC].	$21,435
5250-0012	Generator Onan 15KW hydraulic. Includes generator control / PTO engage switch and a gauge panel located adjacent to breaker box. Generator location: [#LOC].	$28,825
5250-0013	Generator Onan 20KW hydraulic. Includes generator control / PTO engage switch and a gauge panel located adjacent to breaker box. Generator location: [#LOC].	$33,771
5250-0017	Generator Honda EM5000SXK with 4.5KW continuous output. Generator location: [#LOC].	$5,775
5250-0026	Generator Smart Power 10KW hydraulic model ER110. Includes generator control / PTO engage switch and a gauge panel located adjacent to breaker box. Generator location: [#LOC]	$21,174
5250-0036	Generator Smart Power 6KW hydraulic model HR-6 (with top mount cooler). Includes generator control / PTO engage switch and a gauge panel located adjacent to breaker box. Generator location:[#LOC]	$15,512
5250-0037	Generator Smart Power 8KW hydraulic model HR-8 (with top mount cooler). Includes generator control / PTO engage switch and a gauge panel located adjacent to breaker box. Generator location:[#LOC].	$17,531
5250-0038	Generator Smart Power 10KW hydraulic model HR-110 (with top mount cooler). Includes generator control / PTO engage switch and a gauge panel located adjacent to breaker box. Generator location: [#LOC].	$19,000
5250-0039	Generator Harrison 10KW MCR hydraulic. Includes generator control / PTO engage switch and a gauge panel located adjacent to breaker box. Generator location: [#LOC].	$23,149
5250-0040	Generator Harrison 6KW MCR hydraulic. Includes generator control / PTO engage switch and a gauge panel located adjacent to breaker box. Generator location: [#LOC].	$19,621
5250-0041	Generator Honda EM3800SX with 3.3KW continuous output. Generator location: [#LOC].	$5,232
5250-0043	Dealer installed generator. Option includes space only. Dealer responsible for NFPA required 3rd party generator testing.	$279
5250-0047	Generator Smart Power 15KW hydraulic model HR-15 (with top mount cooler). Includes generator control / PTO engage switch and a gauge panel located adjacent to breaker box. Generator location: [#LOC]	$22,153
5250-0050	Generator Smart Power 20KW hydraulic model HR-20 (with top mount cooler). Includes generator control / PTO engage switch and a gauge panel located adjacent to breaker box. Generator location: [#LOC]	$23,792
5250-0051	Locate generator gauge panel on pump operators panel ipo next to breaker box.	$112
5250-0055	Generator Smart Power 8KW hydraulic model ER8. Includes generator control / PTO engage switch and a gauge panel located adjacent to breaker box. Generator location: [#LOC]	$17,531
5250-0075	Guarded PTO engage toggle switch. Located driver side cab switch panel. For use on Typhoon X and CIIX cabs only.	$183
5250-0076	Guarded PTO engage rocker switch. Located driver side cab switch panel. For use on Quest, CIIX LTH aerial and commercial cabs.	$183
5250-0077	Generator Harrison 8KW MCR hydraulic. Includes generator control switch, guarded PTO switch and a gauge panel located adjacent to breaker box. Generator location: [#LOC].	$21,385
5250-0078	Generator Smart Power 10KW hydraulic Liberator model Li15 (with top mount cooler and XRT hyd tool pump). Includes generator control / PTO engage switch and a gauge panel located adjacent to breaker box. Generator location: [#LOC].	$25,144
5255-0000	3rd party generator test without pump.	$637
5255-0001	3rd party generator test with pump.	$83
5260-0000	Generator air deflector Onan hydraulic. When generator is compartment mounted or mounted in a pan on an aerial body, engineering is to specify updraft or downdraft.	$415
5260-0002	Remote control starting kit for Honda EM3800SX, EM5000SX and EM6500SX generators. Locate [#LOC].	$676
5260-0004	Generator prewire for dealer supplied and installed 5 KW portable generator (Honda or other with equivalent dimensions). Includes 12volt wiring and cable between breaker box. Prewire to [#LOC].	$253
5260-0006	Compartment door(s) of compartment mounted generator to have interlock.	$189
5260-0008	Generator prewire for dealer supplied and installed 6.5KW portable generator (Honda or other with equivalent dimensions). Includes 12volt wiring and cable between breaker box. Prewire to [#LOC].	$309
5260-0014	Oil drain valve with tube extending below officer side pump panel.	$197
5260-0017	Compartment door(s) of compartment mounted compressor to have interlock.	$189
5260-0018	Diamond plate generator shield (3) sided. Forward, rearward and outboard sides w/2" space between generator and shield. Outboard side to have slots for hot air exhaust.	$610
5260-0020	Compartment door(s) of compartment mounted electric dump valve to have interlock.	$189
5260-0021	Oil drain valve with tube extending below driver side pump panel.	$197
5300-0000	Light bar Code 3 model XL5100 (PR) 22" Long. All red lens. Location: [#LOC]	$1,157
5300-0003	Light bar Code 3 model 556A3 56" long with all red lenses. Location: Centered on the front cab roof	$1,594
5300-0004	Light bar Code 3 model 718A1 (PR) 18" Long. Red Upper / Clear Lower lens. Location: [#LOC]	$1,304
5300-0011	Light bar Federal Signal ViewPoint. Two (2) 20" light bars LED 3 pod. Lenses shall be all red. Location: [#LOC]	$2,464
5300-0012	Light bar Federal Signal ViewPoint. Two (2) 20" light bars LED 3 pod. Lenses shall be Red/White/Red - Red/White/Red. Location: [#LOC]	$2,732
5300-0013	Light bar Federal Signal ViewPoint. Two (2) 26.5" 4 pod LED light bars. Lenses to be all red. Location: [#LOC]	$2,922
5300-0014	Light bar Federal Signal ViewPoint. Two (2) 26.5" 4 pod LED light bars. Lenses to be R/R/W/R R/W/R/R. Location: [#LOC]	$3,252
5300-0015	Light bar Federal Signal ADX2201 LED (PR) with red lenses. Location: [#LOC]	$2,888

5300-0021	Light bar Federal Signal JetStream 60" LED. Red Solaris reflectors with clear domes. NFPA Compliant, does not require 2 addl side facing bars. Location: Centered on the front cab roof	$2,503
5300-0023	Light bar Federal Signal 22I (PR). Location: [#LOC]	$1,045
5300-0024	Light bar Federal Signal Aerodynic 25RQL-Fast 52" with red/clear lens. Location: Centered on the front cab roof	$1,451
5300-0026	Light bar Federal Signal Aerodynic ADL5202 52" with red/clear/red lens. Location: Centered on the front cab roof	$1,372
5300-0028	Light bar Federal Signal Aerodynic ADX5271 52" with 10 red Solaris LED reflectors. Location: Centered on the front cab roof	$2,781
5300-0029	Light bar Federal Signal AeroDynic ADX7201 72" with 8 red Solaris LED reflectors. Location: Centered on the front cab roof	$2,912
5300-0030	Light bar Federal Signal Aerodynic AH1LC 72" with red/clear lens. Location: Centered on the front cab roof	$1,750
5300-0031	Light bar Federal Signal Aerodynic AH2LC 72" with red/clear lens. Location: Centered on the front cab roof	$1,819
5300-0035	Light bar Federal Signal Viewpoint. Two (2) 20" 3 pod light bars. Location: [#LOC]	$1,419
5300-0036	Light bar Federal Signal Viewpoint. Two (2) 26.5" 4-pod light bars. Location: [#LOC]	$1,776
5300-0044	Light bar Federal Signal Vector VC6001. Location: Centered on the front cab roof	$2,052
5300-0047	Light bar Whelen model 9M380NQ66 w/MKEZ7 mounts. Location: Centered on the front cab roof.	$2,646
5300-0048	Light bar Whelen Centurion model C300700N 72". Location: Centered on the front cab roof	$1,614
5300-0049	Light bar Whelen Edge model 9M380NV 66" with MKEZ7 mounts. Location: Centered on the front cab roof	$3,027
5300-0050	Light bar Whelen Edge model 9M387NQ 72" with MKEZ7 mounts without rear facing strobes. N/A on INTL Chassis. Location: Centered on the front cab roof	$2,784
5300-0051	Light bar Whelen model 9M387NV 72" all strobe with MKEZ7 mounts. N/A with Vista roof with front facing windows. N/A on INTL Chassis. Location: Centered on the front cab roof	$2,784
5300-0052	Light bar Whelen Edge model 9MINNFPA 28 1/4" with MK9 mounts. All strobe light bar. Location: [#LOC]	$2,819
5300-0053	Light bar Whelen Freedom model FN66QLED 66" with MKEZ7 mounts. All LED light bar without rear facing LEDs. Location: Centered on the front cab roof	$3,586
5300-0055	Light bar Whelen Freedom model FN72QLED 72" LED with MKEZ7 mounts. N/A INTL Chassis. Location: Centered on the front cab roof	$3,677
5300-0056	Light bar Whelen Freedom model FN72VLED 72" LED with MKEZ7 mounts. N/A INTL Chassis or Vista roofs with front facing windows. Location: Centered on the front cab roof	$3,677
5300-0059	Light bar Whelen model 9MINNFPA 28 1/4" strobe with MKEZ7 mounts (PR). Location: [#LOC]	$2,819
5300-0060	Light bar Code 3 model 574NFPA1 74" with all red lenses. Location: Centered on the front cab roof.	$1,843
5300-0065	Light bar Federal Signal ADX2202 LED (PR) with red lenses. Located side facing only. Not NFPA compliant forward facing. Location: [#LOC]	$1,790
5300-0070	Light bar Federal Signal JetStream JLX5401 LED 54". Red Solaris reflectors with red domes. Location: Centered on the front cab roof	$2,143
5300-0074	Whelen Mini-Freedom LED light bars (PR) model FNMINI 24" with low profile MK9 mounts. Location: [#LOC]	$4,159
5300-0075	Federal Signal Viewpoint FV2232-SAO light bar. Two (2) 20" 3 pod light bars with red/clear/red pods. Location: [#LOC]	$1,250
5300-0076	Whelen Mini-Freedom LED side facing light bars (PR) model FT8RRRRF 24" with low profile MK9 mounts. Location: [#LOC]. Lense colors: Clear.	$3,984
5300-0082	Whelen Mini-Freedom LED side facing light bars (PR) model FT8RRRRF 24" with MKEZ7 mounts. Location: [#LOC]. Lense colors: Clear.	$3,984
5300-0084	Whelen Mini-Freedom LED light bars (PR) model FNMINI 24" with red/clear lenses and MKEZ7 mounts. Location: [#LOC]	$4,159
5300-0085	Federal Vector SL LED Lightbar Model 545NFPA60L2 60". Includes (12) six LED red Solaris reflectors and (4) six LED white Solaris LED reflectors.	$3,685
5300-0086	Light bar Code 3 MX model 758A1. Upper deck contains (4) rotators (2 ea side) with red lenses and (2) clear oscilasers. Lower deck contains (2) frt red halogen flashers outboard, intersection sweeps and clear lenses. Loc: Centered on the frt cab roof.	$1,778
5300-0087	Light bar Code 3 model XL5100 22" Long. All red lens. Location: Centered on the front cab roof.	$580
5300-0088	Light bar Whelen Freedom model FN55VLED 55" LED with MKEZ7 mounts. N/A with Vista roofs with front facing windows. Location: Centered on the front cab roof	$3,249
5300-0089	Light bar Code 3 MX model 769A1. Upper deck contains 9 rotators w/ red lenses. Lower deck contains intersection sweeps w/clear lenses. Location: Centered on the front cab roof.	$1,841
5300-0091	Light bar Code 3 Excalibur model X58A. Upper deck contains (4) rotators (two ea side) with red lenses and (2) white oscilasers with clear lenses. Lower deck contains (4) takedown lights and two alley lights. Location: Centered on the front cab roof.	$2,020
5300-0092	Light bar Whelen Freedom model FN55QLED 55" LED with takedown lights and MKEZ7 mounts. Location: Centered on the front cab roof.	$3,519
5300-0093	Light bar Whelen Freedom model FN72VLED 72" LED with Opticom and MKEZ7 mounts. N/A INTL Chassis or Vista roofs with front facing windows. Location: Centered on the front cab roof.	$6,155
5300-0094	Light bar Federal Signal 22I (ADL2201Y) with 175 FPM rotators (PR). Location: [#LOC]	$1,045
5300-0095	Light bar Code 3 MX model 769 with R/C/C/C/B lenses. Upper deck contains 9 rotators. Lower deck contains intersection sweeps w/clear lenses. Location: Centered on the front cab roof.	$1,841
5300-0096	Light bar Code 3 Javelin LED model JX67A. Location: Centered on the front cab roof.	$6,186
5300-0097	Light bars Federal Signal Vector/ViewPoint. One (1) center 21" 3 pod and two (2) side 26.5" 4 pod LED light bars. Lenses to be R/R/W/R R/R/R R/W/R/R. Location: "V" centered on the front cab roof.	$4,178
5300-0099	Light bar Federal Signal JLX21 LED (PR). Located side facing only. Location: [#LOC]	$1,754
5300-0100	Light bar Whelen Freedom model FN72QLED 72" LED with clear lenses and MKEZ7 mounts. Includes (8) red LED and (2) white LED. N/A INTL Chassis. Location: Centered on the front cab roof	$4,088
5300-0101	Light bar Federal Signal Aerodynic ADL5202 52" with blue lenses. Location: Centered on the front cab roof.	$1,372
5300-0105	Light bar Code 3 model 718A1 (PR) 18" Long. Red upper/clear lower lens driver side and blue upper/clear lower officer side. Location: [#LOC]	$1,129

5300-0106	Light bar Code 3 MX model 769 with B/B/C/R/R upper lenses clear lower lenses. Upper deck contains (8) rotators; (4) each side and alley lights. Lower deck contains intersection sweeps, (4) LED warning; (2) blue driver and (2) red officer. Includes pre-wir	$3,306
5300-0110	Light bar Whelen Freedom model FN72QLED 72" LED with MK8H high mounts. Includes (12) red LED and (2) white LED. N/A INTL Chassis. Location: Centered on the front cab roof.	$5,164
5300-0111	Whelen Mini-Freedom LED side facing light bars (PR) model FT8RRRRF 24" with MK8H high mounts. Location: [#LOC]. Lense colors: Clear.	$4,170
5300-0112	Light bar Code 3 Model 2169NFPA1 LED. Location: Centered on the front cab roof.	$3,461
5300-0113	Light bar Whelen Freedom model FL2RRRRF 72" LED with MKEZ7 mounts. Includes (10) red LEDs and (4) blue LEDs. N/A INTL Chassis. Location: Centered on the front cab roof.	$4,906
5300-0114	Light bars Federal Signal Vector/ViewPoint. One (1) center 21" 3 pod and two (2) side 26.5" 4 pod light bars. Lenses to be R/R/W/R-R/W/R-R/W/R/R. Location: "V" centered on the front cab roof.	$2,689
5300-0115	Light bar Federal Signal Viewpoint. Two (2) 26.5" 4 pod light bars with red lenses. Location: [#LOC]	$1,679
5300-0117	Light bar Code 3 model 729A (PR) 29" long. Red upper / clear lower lens. Location: [#LOC]	$3,312
5300-0118	Light bar Code 3 MX model 769A with R/W/W/W/R upper lenses and clear lower lenses. Upper deck contains (6) rotators and 3-M Opticom. Lower deck contains intersection sweeps, (6) red LED warning and (4) white LED warning. Location: Centered on the front ca	$6,859
5300-0121	Light bars Federal Signal Vector/ViewPoint. One (1) center 21" 3 pod with 3M 792 Opticom and two (2) side 26.5" 4 pod light bars. Lenses to be R/R/W/R-W/W/W-R/W/R/R. Location: "V" centered on the front cab roof.	$4,878
5300-0124	Light bar Federal Signal ViewPoint. Two (2) 26.5" 4 pod LED light bars configured for use w/vista roof that has front windows. Lenses to be R/R/W/R R/W/R/R. Location: [#LOC]	$3,066
5300-0126	Light bar Whelen Freedom model FN72VLED 72" LED with 3M9592 Opticom, (12) red LEDs, (2) clear LEDs and MKEZ7 mounts. N/A INTL Chassis or Vista roofs with front facing windows. Location: Centered on the front cab roof.	$7,532
5300-0128	Federal ADX7250 LED Lightbar 72". Includes (12) Solaris 6-LED red reflectors, (4) Solaris 9-LED red reflectors, and (12) Solaris 6-LED white reflectors. Includes (2) flashers, (1) for red LEDs and (1) for white LEDs.	$4,558
5300-0129	Light bar Federal Signal ADX2205 LED (PR). Location: [#LOC]	$4,972
5300-0130	Light bar Whelen Freedom model FN82VLED 82" LED with 3M Opticom and MKEZ7 mounts. N/A INTL Chassis or Vista roofs with front facing windows. Location: Centered on the front cab roof	$5,879
5300-0131	Light bar Whelen model FFX2068 19" LED. Location: Centered front of cab below windshield	$1,576
5300-0132	Light bar Federal Signal ViewPoint. Two (2) 26.5" 4 pod LED light bars. Lenses to be R/R/W/R R/W/G/R. Location: [#LOC]	$3,403
5300-0136	Light bar Federal Signal 22I (PR) red/blue lenses. Location: [#LOC]	$1,045
5300-0137	Light bar Whelen Freedom model FN72VLED 72" LED with Opticom and MKEZ7 mounts. Includes (10) red LED and (2) white LED. N/A INTL Chassis. Location: Centered on the front cab roof.	$6,977
5300-0138	Light bar package, Federal Signal Escape LED (5) bar package. Includes: (1) 40" LED front bar w/ Opticom, (2) diagonal 26" LED bars and (2) 28" side LED bars.	$10,939
5300-0139	Light bars Federal Signal Vector/ViewPoint. One (1) center 21" 3 pod and two (2) side 26.5" 4 pod LED light bars configured for use w/vista roof that has front windows. Lenses to be R/R/W/R R/R/R R/W/R/R. Location: "V" centered on the front cab roof.	$3,994
5300-0140	Light bar Whelen Freedom model FN72QLED 72" LED with MK8 high mounts. Includes (10) red LED and (4) white LED. N/A INTL Chassis. Location: Centered on the front cab roof.	$5,169
5300-0141	Light bar Code 3 model 574A1 74" with all red lenses. Location: Centered on the front cab roof.	$2,081
5300-0142	Light bar Federal Signal JetStream 60" LED. Red/White Solaris reflectors with clear domes. NFPA Compliant, does not require 2 addl side facing bars. Location: Centered on the front cab roof	$2,651
5300-0143	Mounting brackets for Federal Signal Vector or Viewpoint lightbars. Height from top of cab to bottom of lightbar to be approx. 4".	$143
5300-0144	Light bar Whelen Edge model 9M387NQ 72" with MKEZ7 mounts, pre-wire for Opticom and without rear facing strobes. N/A on INTL Chassis. Location: Centered on the front cab roof	$3,043
5300-0145	Federal ADX7204 LED Lightbar 72". Includes (12) Solaris 9-LED red reflectors and Opticom. Location: Centered on the front cab roof.	$5,523
5300-0146	Light bar Whelen Freedom model FN72QLED 72" LED with MKEZ7 mounts. Includes (6) red LED, (2) blue LED and (2) white LED. N/A INTL Chassis. Location: Centered on the front cab roof	$4,088
5300-0147	Light bar Code 3 LED model 2122NFPA1 (PR) 22.5" Long. All red with clear lens. Location: [#LOC].	$4,141
5300-0148	Light bar Whelen model 9MMEDFFD 28 1/4" strobe with MK9 mounts (PR). Lense colors to be RRCR (front to rear). Location: [#LOC]	$2,583
5300-0149	Light bar Federal Signal ViewPoint with 3M Opticom. Two (2) 26.5" 4 pod LED light bars model 535NFPA8P20. Lenses to be Red\Blue\Red\White Opticom\Red\Blue\Red. Location: [#LOC]	$5,220
5300-0150	Light bar Federal Signal ViewPoint. Two (2) 26.5" 4 pod LED light bars. Lenses to be R/B/R/B B/R/B/R. Location: [#LOC]	$2,922
5300-0151	Light bar Whelen Freedom model FN66VLED 66" with MKEZ7 mounts. All LED light bar. Location: Centered on the front cab roof	$3,586
5300-0152	Light bar Whelen Freedom model FN72QLED 72" LED with Opticom and MKEZ7 mounts. Includes (6) red LED, (4) Blue LED and (2) white LED. N/A INTL Chassis. Location: Centered on the front cab roof.	$6,950
5300-0154	Light bar Federal Signal JetStream 60" LED. Red Solaris reflectors and red domes with clear center and 3M 792 Opticom. NFPA Compliant, does not require 2 addl side facing bars. Location: Centered on the front cab roof	$6,413
5300-0155	Federal ADX5283 LED Lightbar 52" with clear domes. Includes (16) Solaris 6-LED red reflectors, (4) Solaris 6-LED white reflectors, TCL and Opticom. Includes (2) flashers, (1) for red LEDs and (1) for white LEDs.	$5,937
5300-0156	Light bar Federal Signal AeroHawk ADX7202 72" with (6) red and (2) white Solaris LED reflectors. Location: Centered on the front cab roof	$3,067
5300-0157	Whelen Mini-Freedom LED light bars (PR) model FNMINI 24" with clear lenses and MKEZ7 mounts. Location: [#LOC]	$4,159
5300-0158	Light bar Whelen Freedom model FN72QLED 72" LED with 3M Opticom, clear lenses and MKEZ7 mounts. N/A INTL Chassis. Location: Centered on the front cab roof	$5,948

5300-0159	Light bar Federal Signal ADX7202 72" with (6) red, (2) white Solaris LED reflectors and 3M Opticom. Location: Centered on the front cab roof	$5,025
5300-0160	Light bar Federal Signal JetStream 60" LED. Red Solaris reflectors with center traffic clearing light. NFPA Compliant, does not require 2 addl side facing bars. Location: Centered on the front cab roof	$2,580
5300-0161	Light bar Whelen Freedom model FN72VLED 72" LED with Opticom and MKEZ7 mounts. Includes (10) red LED, (2) white LED and (2) green LED. N/A INTL Chassis. Location: Centered on the front cab roof.	$7,737
5300-0162	Whelen Mini-Freedom LED side facing light bars (PR) model FT8RARRF driver and FT8RRARF officer 24" with MKEZ7 mounts. Location: [#LOC]. Lense colors: Clear.	$3,984
5300-0163	Light bar Whelen Freedom model FN72VLED 72" LED with offset Opticom and MKEZ7 mounts. N/A INTL Chassis or Vista roofs with front facing windows. Location: Centered on the front cab roof.	$6,155
5300-0164	Light bar package, Federal Signal Escape LED (5) bar package. Includes: (1) 40" LED front bar (RRWRR), (2) diagonal 26'' LED bars (RWR) and (2) 28'' side LED bars (RRR).	$8,425
5300-0165	Whelen Mini-Freedom LED side facing front cab light bars (PR) model FT8RRRRF 24" with MKEZ7 mounts. All red LEDs with clear lenses. For use on rear mount platforms with supplimental upper level Zone A warning lights. Locate one each side front cab corners	$3,984
5300-0166	Light bar Whelen Freedom model FN60VLED 60" LED with MKEZ7 mounts. N/A on Vista roofs with front facing windows. Location: Centered on the front cab roof	$4,616
5300-0167	Whelen Mini-Freedom LED side facing light bars (PR) model FT8RRRRF 28.25" with MKEZ7 mounts. Location: [#LOC]. Lense colors: Clear.	$5,032
5300-0168	Whelen Mini-Freedom LED side facing light bars (PR) model FT8RRRRF 24" with MKEZ7 mounts. Location: [#LOC]. Lense colors: Red.	$3,984
5300-0169	Light bar Whelen Freedom model FN72QLED 72" LED with red lenses and MKEZ7 mounts. Includes (8) red LED and (2) white LED. N/A INTL Chassis. Location: Centered on the front cab roof	$4,088
5300-0170	Light bar Federal Signal ViewPoint. Two (2) 26.5" 4 pod LED light bars. Lenses to be R/Opticom/W/R R/W/G/R. Location: Front cab corners	$5,592
5300-0171	Light bar Federal Signal Aerodynic ADL5202 52" with driver red and officer blue lenses. Location: Centered on the front cab roof.	$1,372
5300-0172	Whelen Mini-Freedom LED side facing front cab light bars (PR) model FT8RRRRF 24" with MKEZ7 mounts. All red LEDs with red lenses. For use on rear mount platforms with supplimental upper level Zone A warning lights. Locate one each side front cab corners s	$3,984
5300-0173	Light bar Whelen Freedom model FN72VLED 72" LED with MK8 high mounts. Includes (12) red LED, (2) amber LED and (4) white LED. N/A INTL Chassis or Vista roofs with front facing windows. Location: Centered on the front cab roof.	$5,964
5300-0174	Light bar Whelen Freedom model FN82VLED 82" LED with MKEZ7 mounts and red lenses. Includes (1) driver forward facing steady burn to meet California law. N/A INTL Chassis or Vista roofs with front facing windows. Location: Centered on the front cab roof	$4,343
5300-0175	Light bar Whelen Freedom model FN72QLED 72" LED with PE215 pre-emptor and MKEZ7 mounts. Includes (12) red LED and (2) white LED. N/A INTL Chassis. Location: Centered on the front cab roof.	$5,691
5300-0176	Light bar Whelen Freedom model FN72QLED 72" LED with MK8 high mounts. N/A INTL Chassis. Location: Centered on the front cab roof	$3,677
5300-0177	Light bars Federal Signal Vector/ViewPoint. One (1) center 21" 3 pod with 3M 792 Opticom and two (2) side 26.5" 4 pod light bars configured for use w/vista roof that has front windows. Lenses to be R/R/W/R-R/Opticom/R-R/W/G/R. Location: "V" centered o	$6,519
5300-0178	Light bar Federal Signal ViewPoint. Two (2) 20" light bars LED 3 pod. Lenses shall be blue/red/blue. Side facing only. Location: [#LOC].	$2,464
5300-0179	Light bar Federal Signal JLX21 LED red/blue(PR). Located side facing only; blue forward. Location: [#LOC]	$2,268
5300-0180	Light bar Federal Signal Escape LED model ESC 2202-NFPA (PR). Red / white with clear lenses. Location: [#LOC].	$3,236
5300-0181	Light bar Federal Signal Escape LED model ESC 2202-NFPA (EA). Red / white with clear lenses. Location: Center front of cab. Requires additional forward facing lightbars.	$1,618
5300-0182	Light bar (PR) Federal Signal Escape LED model ESC 2201P-NFPA (driver side) and ESC 2201D-NFPA (officer side). Red / white with clear lenses. Side facing only - not for use at front cab corners. Location: [#LOC].	$3,068
5300-0184	Whelen Mini-Freedom LED side facing light bars (PR) model FT8RCCRF 28.25" with R/C/C/R lenses and MKEZ7 mounts. Location: [#LOC]	$3,953
5300-0185	Light bar Whelen Freedom model FN72QLED 72" LED with clear lenses, MKEZ7 mounts and pre-wire for 3M opticom. Includes (8) red LED and (2) white LED. N/A INTL Chassis. Location: Centered on the front cab roof	$4,161
5300-0186	Light bar Whelen Freedom model FN72QLED 72" LED with pre-wire for 3M Opticom and MKEZ7 mounts. N/A INTL Chassis. Location: Centered on the front cab roof	$3,919
5300-0187	Light bar Whelen Freedom model FN72QLED 72" LED with clear lenses and MKH8 high mounts. Includes (8) red LED and (2) white LED. N/A INTL Chassis. Location: Centered on the front cab roof	$4,128
5300-0188	Light bar Whelen Freedom model FN72VLED 72" LED with Opticom and MK8 high mounts. N/A INTL Chassis or Vista roofs with front facing windows. Location: Centered on the front cab roof.	$6,198
5300-0189	Light bar Federal Signal ADX2201 LED with red lenses. Location: Centered on the front cab roof. Requires additional corner lightbars for NFPA compliance.	$1,445
5300-0190	Light bar Whelen Freedom model FN72QLED 72" LED with Opticom and MK8 high mounts. Includes (6) red LED, (4) Blue LED and (2) white LED. N/A INTL Chassis. Location: Centered on the front cab roof.	$6,990
5300-0192	Light bar Code 3 Model XP9588NFPA1 88" LED. All red with clear lenses. Not available on commercial cabs. Location: Centered on the front cab roof.	$4,553
5300-0193	Code3 model XP9501NFPA1 (PR) red LED with clear domes. Location: [#LOC].	$1,934
5300-0194	Light bar Code 3 LED model 2122NFPA1 (3) 22.5'' Long. All red with clear lens. Location: (1) centered on front cab roof and (1) each side of center bar front corner facing.	$6,212
5300-0195	Light bar Federal Signal JetStream 60" LED. Red driver/Blue officer Solaris reflectors. Location: Centered on the front cab roof	$2,196
5300-0196	Whelen Mini-Freedom LED light bars (PR) model FNMINI 24" with red lenses and MK8 high mounts. Location: [#LOC].	$4,263

5300-0197	Light bar Whelen Freedom model FN72QLED 72" LED with 3M Opticom, red lenses and MKH8 high mounts. N/A INTL Chassis. Location: Centered on the front cab roof	$5,996
5300-0198	Light bar Federal Signal ADX2215-SMV LED side facing (PR) with driver blue forward/red rearward and officer red forward/blue rearward facing lenses. Location: [#LOC].	$4,075
5300-0199	Light bar Whelen Freedom model FL2RRRR 72" LED with Opticom and MKEZ7 mounts. Includes (12) red LED. N/A INTL Chassis. Location: Centered on the front cab roof.	$6,952
5300-0202	Light bar Weldon Aero Maxx II 59" LED. NFPA Compliant, does not require 2 addl side facing bars. Location: Centered on the front cab roof	$2,853
5300-0203	Light bar Whelen Freedom model FN72QLED 72" LED with 3M 795H Opticom, (10) red LEDs, (2) clear LEDs and MK8 high mounts. For use with front vista windows. Location: Centered on the front cab roof.	$6,953
5300-0204	Federal ADX7262 LED Lightbar 72" with clear lenses. Includes (12) Solaris 6-LED red reflectors, (8) Solaris 6-LED blue reflectors, (4) Solaris 9-LED red reflectors, and a 3M Opticom. Includes (2) flashers, (1) for red LEDs and (1) for blue LEDs.	$5,554
5300-0205	Whelen Mini-Freedom LED side facing light bars (PR) model FT8CRRCF 28.25" with CRRC lenses and MKEZ7 mounts. Location: [#LOC].	$3,953
5300-0207	Federal ADX7250 LED Lightbar 72". Includes (12) Solaris 6-LED red reflectors, (4) Solaris 9-LED red reflectors, and (10) Solaris 6-LED white reflectors and Opticom. Includes (2) flashers, (1) for red LEDs and (1) for white LEDs.	$6,902
5300-0209	Federal ADX7265 LED Lightbar 72". Includes (10) Solaris 6-LED red reflectors, (10) Solaris 6-LED blue reflectors, (4) Solaris 9-LED red reflectors, and a 3M Opticom. Includes (2) flashers, (1) for red LEDs and (1) for blue LEDs.	$5,554
5300-0210	Whelen Mini-Freedom LED light bars (PR) model FNMINI 24" with red/clear lenses and MK8 high mounts. Location: [#LOC].	$4,263
5300-0211	Light bar Whelen Freedom model FN60QLED 60" LED with MKEZ7 mounts. Includes (8) red, (2) white and (2) amber modules. Location: Centered on the front cab roof	$4,703
5300-0212	Light bar Whelen Freedom model FN72VLED 72" LED with MKEZ7 mounts. Includes (10) red LED and (4) white LED. N/A INTL Chassis. Location: Centered on the front cab roof.	$4,782
5300-0213	Light bar Code 3 MX model 769NFPA1 with Opticom. Upper deck contains 5 rotators w/ red lenses. Lower deck contains 795H Opticom and intersection sweeps w/clear lenses. Location: Centered on the front cab roof.	$3,091
5310-0000	Light bar Federal Signal Signal Master SML6.	$828
5310-0001	Light bar Federal Signal Signal Master SML8.	$910
5310-0002	Light bar Federal Signal Signal Master SMLED6.	$1,414
5310-0003	Light bar Federal Signal Signal Master SMLED8.	$1,492
5310-0004	Whelen Traffic Advisor Model TA637A - 33" long.	$1,300
5310-0005	Whelen Traffic Advisor Model TA837A - 43.25" long.	$1,031
5310-0011	Light bar CODE 3 model AS10S Arrowstik, 47" long. Mounted center rear body.	$1,192
5310-0012	Diamond plate shield over rear directional light.	$296
5310-0013	Whelen Traffic Advisor Model TA637 LED - 33" long.	$1,596
5310-0014	Light bar CODE 3 model AS839 Arrowstik, 39" long. Lenses to be amber with red on the ends. Mounted center rear body.	$973
5310-0015	Light bar CODE 3 model NASL839 LEDX Narrowstik, 40.5" long. Lights heads are amber with red on the ends. Mounted center rear body.	$1,735
5310-0016	Light bar Federal Signal Signal Master Cuda LED 44" with 8 lights.	$1,866
5310-0017	Whelen Traffic Advisor Model TAL65 LED - 36" long.	$1,278
5310-0018	Whelen Traffic Advisor Model TAM65 LED - 36" long.	$1,652
5310-0019	Light bar Code 3 model NASL847 LED Narrowstik, 47" long. Mounted on rear of body.	$1,732
5310-0022	Light bar Federal Signal Signal Master Cuda LED 34" with 6 lights.	$1,427
5310-0023	Light bar CODE 3 model NASL630 LEDX Narrowstik, 30.5 inches long.	$1,556
5310-0025	Directional light circuit wiring through upper level warning.	$71
5310-0027	Whelen Traffic Advisor Model TAM85 LED - 47" long.	$2,312
5310-0028	Whelen Traffic Advisor Model TAM83 LED - 31" long.	$1,694
5310-0029	Smooth plate shield painted job color over rear directional light.	$511
5310-0031	Whelen Traffic Advisor Model TA4437L LED- (2) 22.75" long. Locate one each side on rear body.	$1,937
5350-0000	Camera backup Intec with monochrome monitor.	$4,274
5350-0001	Camera backup Safety Vision LCD model SV-CLCD70B-625B.	$1,928
5350-0002	FireCom intercom system with (4) cab jacks. N/A with 2 door cab. Headsets to be shipped loose.	$4,099
5350-0003	FireCom intercom system with (4) cab jacks and (1) pump panel jack. N/A with 2 door cab. Headsets to be shipped loose.	$4,356
5350-0004	FireCom intercom jack on the turntable. (N/A with three-way aerial intercom).	$1,033
5350-0005	FireCom intercom jacks. (1) turntable jack and (1) tip jack. N/A with two or three-way aerial intercom.	$1,733
5350-0006	FireCom intercom jacks. (1) turntable jack and (2) tip jacks. N/A with two or three-way aerial intercom.	$2,146
5350-0007	FireCom intercom system with (6) cab jacks. Custom cabs only. Headsets to be shipped loose.	$5,348
5350-0008	FireCom intercom system with (6) cab jacks and (1) pump panel jack. Custom cabs only. Headsets to be shipped loose.	$5,607
5350-0025	Back up camera for Vehicle Information Control Center. Video displays automatically when transmission is in reverse.	$650
5350-0026	Side facing camera mtd up high on officer side of the cab centrally located (above canopy window if applicable) interlocked with right turn signal. Displays video on vehicle information control center.	$650
5350-0027	Side facing camera mtd up high on driver side of the cab centrally located (above canopy window if applicable) interlocked with left turn signal. Displays video on vehicle information control center.	$650
5350-0028	Forward facing camera mounted (approximately) center of cab.	$650
5350-0044	Firecom Panther CCS 2-way aerial intercom. Speaker to be located to rear of platform on Bronto units.	$2,668
5350-0045	Firecom Panther CCS 3-way aerial intercom. Speaker to be located to rear of platform on Bronto units.	$3,984

5350-0046	Analog Interface for Firecom PantherC or CCS intercom. Allows Panther system to connect to the analog cab Firecom headset system.	$765
5350-0048	Setcom intercom system with (6) cab jacks and (1) pump panel jack. Custom cabs only. Headsets to be shipped loose.	$8,455
5350-0049	FireCom intercom system with (5) cab jacks. N/A with 2 door cab. Headsets to be shipped loose.	$4,724
5350-0050	FireCom intercom system with (5) cab jacks and (1) pump panel jack. N/A with 2 door cab. Headsets to be shipped loose.	$4,981
5350-0054	Safety Vision officer's side camera. Requires Safety Vision back-up camera option. SV-620 Kit w/ SV-523. Camera to be located on officer's side mirror.	$842
5350-0057	FireCom intercom system 3025R with (6) cab jacks and (1) pump panel jack. Custom cabs only. Headsets to be shipped loose.	$6,408
5350-0058	Remote head for Firecom intercom. Location: [#LOC].	$426
5350-0060	Diamond plate camera shield.	$196
5350-0061	Safety Vision driver's side camera. Requires Safety Vision back-up camera option. SV-620 Kit w/ SV-523. Camera to be located on driver's side mirror.	$842
5350-0062	Firecom PantherC 2-way aerial intercom. Speaker to be located to rear of platform on Bronto units.	$2,668
5350-0063	Firecom PantherC 3-way aerial intercom. Speaker to be located to rear of platform on Bronto units.	$3,984
5350-0067	FireCom intercom system with (1) cab jack and (1) pump panel jack. Headsets to be shipped loose.	$1,523
5350-0069	FireCom intercom prewire. Includes a PP20 jack at pump operator's panel and aerial turntable. Wiring to be run to officer's side overhead console.	$1,311
5350-0070	Voyager back up camera for Vehicle Information Control center. Video displays automatically when transmission is in reverse.	$654
5350-0071	Voyager side mtd rear facing camera positioned up high on officer side of the cab centrally located (above canopy window if applicable) interlocked with right turn signal. Displays video on Vehicle Information Control center.	$637
5350-0072	Voyager side mtd rear facing camera positioned up high on driver side of the cab centrally located (above canopy window if applicable) interlocked with left turn signal. Displays video on Vehicle Information Control center.	$637
5350-0073	Voyager forward facing camera mounted upper center area of cab for Vehicle Information Control center.	$599
5350-0074	Sigtronics US-45S intercom system with (4) cab jacks, (1) pump panel jack, four headsets / hooks, PTT switches for driver / ppnl. Does not include radio interface cable. Custom cabs only. Headsets to be shipped loose.	$4,027
5350-0076	David Clark model 3800 intercom system with (5) cab head sets. Headsets to be shipped loose.	$6,612
5350-0077	FireCom intercom system 3020R with (5) cab jacks and (1) pump panel jack. N/A with 2 door cab. Headsets to be shipped loose.	$5,335
5350-0078	Smooth plate camera shield painted job color.	$303
5350-0079	Sigtronics US-45D intercom system with (3) cab jacks, (1) pump panel jack, three headsets / hooks, PTT switches for driver/officer/ppnl. Does not include radio interface cable. Custom cabs only. Headsets to be shipped loose.	$3,801
5350-0080	Camera backup Safety Vision LCD model SV-LCD70-625B with split screen capable monitor.	$2,259
5350-0084	David Clark model 3800 intercom system with (6) cab head sets. Headsets to be shipped loose.	$7,478
5350-0085	Safety Vision officer's side camera SV-622RS w/ SV-512 cable. Requires Safety Vision back-up camera option. Camera to be located officer's side of cab, up high rear of front cab door.	$872
5350-0086	Safety Vision driver's side camera SV-622LS w/ SV-512 cable. Requires Safety Vision back-up camera option. Camera to be located driver's side of cab, up high rear of front cab door.	$872
5350-0087	FireCom intercom system 3020R with (5) cab jacks and (2) tillerman cab jacks. Headsets to be shipped loose.	$6,300
5350-0088	FireCom intercom system 3020R with (6) cab jacks, (1) pump panel jack and (1) rear body jack. Custom cabs only. Headsets to be shipped loose.	$6,032
5350-0089	FireCom wireless intercom system with (4) cab jacks. N/A with 2 door cab. Headsets to be shipped loose.	$5,871
5350-0102	FireCom intercom system 3020R with (6) cab jacks and (1) pump panel jack. Custom cabs only. Headsets to be shipped loose.	$5,959
5350-0110	Camera backup Zone Defense LCD model SYS-323-1-4Q with split screen capable monitor.	$1,861
5350-0111	Camera backup Zone Defense LCD model SYS-323-1-4.	$1,253
5350-0112	Sigtronics US-67S intercom system with (6) cab jacks, six headsets / hooks, PTT switches for driver / officer. Does not include radio interface cable. Custom cabs only. Headsets to be shipped loose.	$5,255
5350-0114	Sigtronics US-67D intercom system with (6) cab jacks, six headsets / hooks, PTT switches for driver / officer. Does not include radio interface cable. Custom cabs only. Headsets to be shipped loose.	$5,357
5380-0004	Compartment light incandescent additional (EA). Locate opposite of standard (if applicable) in compartment [#LOC]	$69
5380-0005	Compartment light LED additional (EA). Locate opposite of standard in compartment [#LOC].	$169
5380-0006	Compartment light incandescent additional (EA). Door(s) mounted. Compartment [#LOC].	$108
5380-0007	Compartment light LED additional (EA). Door(s) mounted. Compartment [#LOC].	$286
5380-0009	Compartment light package incandescent for medium bodies.	$700
5380-0010	Compartment light package incandescent for large bodies.	$1,089
5380-0012	Compartment light package LED for medium bodies.	$3,007
5380-0013	Compartment light package LED for large bodies.	$4,676
5380-0018	Compartment light package POK LED for medium bodies. Includes one light per compartment (two if transverse).	$3,520
5380-0019	Compartment light package POK LED for large bodies. Includes one light per compartment (two if transverse).	$5,604
5380-0022	Compartment light POK LED additional (EA). Locate [#LOC].	$308
5380-0023	Compartment light POK LED additional (EA). Locate [#LOC].	$532
5380-0029	Ground light package for cab and body - large.	$652
5380-0032	Ground light package LED - large.	$2,132
5380-0035	Step light package body - large.	$608

5380-0038	Step light package body LED - large.	$2,089
5380-0042	Light recessed step Truck-Lite incandescent (additional). Locate [#LOC]	$111
5380-0045	Light recessed step Truck-Lite LED (additional). Locate [#LOC]	$169
5380-0049	Compartment light package ROM LED for medium bodies. Includes one light per compartment (two if transverse).	$4,321
5380-0050	Compartment light package ROM LED for large bodies. Includes one light per compartment (two if transverse).	$6,839
5380-0051	Compartment light ROM LED for medical cabinet (EA).	$425
5380-0055	Cab and body ground lights to be wired through chassis reverse.	$71
5380-0056	Compartment lights to be wired to automatically activate when park brake is set (IPO cab mtd compartment light switch).	$71
5380-0058	Compartment light package Whelen PSCACCCR LED for medium bodies. Light to be stacked vertically on one side of compartment.	$7,316
5380-0060	Additional LED ground light (EA). Location: Below [#LOC]	$191
5380-0062	Compartment light Federal Signal LED additional (EA). Locate opposite of standard in compartment [#LOC]	$136
5380-0063	Compartment light Federal Signal LED additional (EA). Door(s) mounted. Compartment [#LOC].	$253
5380-0065	Compartment light package Federal Signal LED for medium bodies.	$2,409
5380-0066	Compartment light package Federal Signal LED for large bodies.	$3,746
5380-0068	Ground light package Federal Signal LED - large.	$2,133
5380-0070	Step light package body Federal Signal LED - large.	$1,606
5380-0071	Light Federal Signal recessed step LED (additional). Locate [#LOC]	$136
5380-0072	Additional Federal Signal LED ground light (EA). Location: Below [#LOC]	$179
5380-0074	Compartment light package Whelen PSC0CDCR LED for large bodies. Light to be stacked vertically on forward side of compartment unless implacable.	$5,366
5380-0075	Compartment light incandescent additional (EA). Locate on ceiling of [#LOC].	$69
5380-0076	Compartment light deluxe package Whelen PSC0CDCR LED for medium bodies. Light to be stacked vertically on both sides of compartment.	$7,316
5380-0077	Compartment light package Amdor Luma-Bar LED for medium bodies. Includes one light per compartment (two if transverse).	$2,545
5380-0078	Compartment light Amdor Luma-Bar LED 26-42" long additional (EA). Locate [#LOC].	$246
5380-0079	Compartment light Amdor Luma-Bar LED 48-74" long additional (EA). Locate [#LOC].	$375
5380-0081	Compartment light package Whelen LED for medium bodies.	$4,357
5380-0082	Ground light package Whelen LED - large.	$2,883
5380-0083	Step light package Whelen LED - large.	$2,883
5380-0084	Ground light package for cab and body - large body. There will be 2 lights under each Compartment opening.	$1,303
5380-0086	Ground light package Amdor Luma Bar / Trucklite LED - large. Lights below cab doors to be Luma Bar, lights below bumper and body to be Trucklite.	$2,192
5380-0087	Compartment light package Weldon LED for medium bodies.	$2,075
5380-0090	Compartment light LED (EA). Location: [#LOC].	$169
5380-0091	Whelen PSC0CDCR LED strip light. Locate opposite standard in [#LOC].	$139
5380-0096	Two (2) Whelen PSC0CDCR LED strip light. Locate two (2) opposite side of standard in [#LOC], one (1) 20" down from top of opening and one (1) 10" up from bottom.	$278
5380-0097	Whelen PSC0CDCR LED strip light. Locate one (1) light 15" down from top of opening on opposite side of standard in [#LOC].	$139
5380-0098	Compartment light package Whelen PSC0CDCR LED for medium bodies. Light to be stacked vertically on one side of compartment.	$3,658
5380-0099	Ladder tunnel light LED (EA).	$169
5380-0111	Compartment light Amdor LED for medical cabinet (EA).	$246
5380-0116	Ground light package Amdor Luma Bar H2O LED - large.	$1,651
5380-0136	Compartment light package Amdor Luma-Bar LED for large bodies. Includes one light per compartment (two if transverse).	$4,032
5380-0143	Compartment light ROM V3 LED additional (EA) ceiling mounted as close to door opening as practical. Location: [#LOC].	$301
5380-0145	Compartment light package Amdor Luma-Bar LED for large bodies. Includes two lights per compartment (four if transverse).	$7,272
5390-0001	Hosebed Light Unity. Locate at front area of hosebed. Switched with work light switch in cab	$165
5390-0002	Hosebed Light Federal Signal GH Scene. Locate at the front area of hosebed. Switched with worklight switch in cab.	$215
5390-0003	Hosebed light Trucklite. Locate center front of hosebed. Switched with work light switch in cab.	$99
5390-0004	Crosslay lights Weldon. Locate on each side at rear of crosslay approx. 16" from side of body.	$305
5390-0005	Crosslay light deck Unity. Locate to rear of crosslay (SM) or forward of crosslay (TM).	$161
5390-0006	Deck Lts-Collins FX-12R (PR) Location: [#LOC]	$981
5390-0007	Deck/Scene light circuit wiring through chassis reverse. Requires rear deck or scene light.	$71
5390-0008	Federal Signal GH Scene lights (PR). Switch in cab (driver and officer side facing lights switched separately). Locate [#LOC]	$404
5390-0018	Whelen 600 series 26 degree scene lights (PR) with weatherproof connectors. Switch in cab (driver and officer side facing lights switched separately). Locate [#LOC].	$319
5390-0019	Whelen 700 series 8-32 degree scene lights (PR) with weatherproof connectors. Switch in cab (driver and officer side facing lights switched separately). Locate [#LOC].	$313
5390-0022	Crosslay light Trucklite. Locate to rear of crosslay (SM) and forward of crosslay (TM as applicable). Switched with work light switch in cab.	$99
5390-0023	Tomar 46H13-C 13 degree scene lights (PR) with weatherproof connectors. Switch in cab (driver and officer side lights switched separately). Locate [#LOC].	$354
5390-0025	Cab scene lights are to be switched with cab doors in addition to standard.	$71
5390-0026	Federal Signal GH Scene cornering lights (PR) wired to turn signals, reverse and work lights. Location: [#LOC]	$775

5390-0030	Deck Lts-Collins FX-6 (PR) Location: [#LOC]	$981
5390-0036	Hosebed light circuit wiring through chassis reverse. Requires hosebed light.	$71
5390-0039	Federal Signal GH Scene lights (PR). Switch in cab (driver and officer side facing lights switched together). Locate [#LOC]	$404
5390-0040	Weldon HID scene lights (PR) with weatherproof connectors. Switch in cab (driver and officer side lights switched separately). Locate [#LOC].	$1,139
5390-0043	Crosslay light Trucklite. Locate forward of crosslay. Switched with work light switch in cab.	$99
5390-0048	Whelen 600 series gradient Super LED scene lights (PR) with weatherproof connectors. Switch in cab (driver and officer side lights switched separately). Locate [#LOC].	$937
5390-0049	Whelen 600 series 26 degree scene lights (PR) with LH46001 castings. Switch in cab (side facing lights switched separately). Locate [#LOC].	$409
5390-0050	Whelen 500 series LED scene lights (PR) with weatherproof connectors. To be used as cornering lights wired to turn signals and four way flashers. Interlocked with park brake. Location: [#LOC]	$786
5390-0053	Whelen 700 series 8-32 degree scene lights (PR) with weatherproof connectors. Switch in tillerman cab (driver and officer side lights switched separately) and wired through tillerman cab doors. Locate (1) each side rear of cab doors above windows.	$383
5390-0054	Hosebed light Trucklite. Locate (1) each side front of hosebed. Switched with work light switch in cab.	$198
5390-0056	Crosslay light Weldon. Locate to rear of crosslay (SM) or forward of crosslay (TM). Switched with work light switch in cab.	$153
5390-0057	Hosebed light Weldon. Locate at front area of hosebed. Switched with work light switch in cab.	$153
5390-0059	Whelen 600 series 26 degree scene lights (PR) with diamond plate mounting box. Switch in cab (side facing lights switched separately). Locate [#LOC].	$509
5390-0066	Whelen 600 series gradient Super LED scene lights (PR) with weatherproof connectors and diamond plate mounting boxes. Switch in cab (driver and officer side lights switched separately). Locate [#LOC].	$1,027
5390-0068	Havis Shield 12V HID scene lights model KR-4035X-D (PR). Location(s): [#LOC]. Includes switch in cab for side facing lights.	$1,486
5390-0070	Crosslay light Collins FX-12. Locate to rear of crosslay (SM) and forward of crosslay (TM as applicable).	$492
5390-0071	Hosebed light Collins FX-12. Located center front of hosebed. Switched with work light switch in cab	$492
5400-0003	Engine Compartment Light (EA).	$115
5400-0004	Incandescent pump panel light - additional (EA). Location: [#LOC].	$87
5400-0006	Pump panel LED light package with (3) lights per side pump panel. Pump panels over 45" may require additional lights. Side mount only.	$1,064
5400-0007	LED pump panel light - additional (EA). Location: [#LOC].	$181
5400-0008	(1) pump panel light over the pump control area to be wired to come on when pump shift is placed to pump.	$37
5400-0010	Incandescent pump compartment light (EA).	$125
5400-0011	LED pump compartment light (EA).	$341
5400-0020	Federal NightFighter Light with Internal Pole. Locate [#LOC]. Switched on light head.	$1,186
5400-0021	Federal NightFighter Light with External Pole. Locate [#LOC]. Switched on light head.	$2,052
5400-0030	Fog Lights-Qtz Halogen (PR) [#COL] and located [#LOC].	$257
5400-0033	Cab Dome Lts Red/White 4" incandescent. White light wired thru door and light assembly mounted rocker switch. Red light thru light assembly mounted rocker switch.	$531
5400-0034	Dome Lts Red 4" (Ea) [#LOC]. Includes assembly mounted rocker switch.	$125
5400-0035	Dome Lts White 4" incandescent. Includes assembly mounted rocker switch. Requires one for each cab door.	$143
5400-0037	Dome Lts Red/White Incandescent. Package includes two lights mounted in the front and two mounted in the rear of the cab. White light wire through door and light assembly mounted switch. Red light through light assembly mounted switch.	$509
5400-0038	Spotlight - 6" Unity (PR) cab post mount	$417
5400-0039	Spotlight Specialty 2150 hand held located on officer's side of cab dash - hardwired.	$356
5400-0041	SpotLt-Fed VisibeamII Remote. If one is selected it will be located centered on cab roof mounted on a bracket. If two are selected, they will be located one each side of cab roof to rear of lightbar.	$630
5400-0042	Maplight-Sunnex [#LOC].	$304
5400-0043	Maplight-Little Lt 18" Flex [#LOC]. Includes on/off switch.	$205
5400-0044	Tillerman tracking lights (PR) - Chrome pedestal mtd Signal Stat #3763 with green lens #9341G. Locate on cab roof to rear of A/C (on top of vista if equipped) approx. 18" apart (each light to be 9" off centerline of cab). Dim filament to use 24 volt bulb	$409
5400-0045	Zico cornering light (PR) with polished stainless steel housing model #ZQL-SS-H7614. The lights are to be located each side in the forward area of the tiller axle wheelwell facing forward and be switched from the tiller cab.	$566
5400-0047	Pump panel light package with (3) lights per side pump panel. Pump panels over 45" may require additional lights. Side mount only.	$597
5400-0049	Pump panel light package - RLP/MM. Includes (2) lights per side pump panel and (2) lights for angled upper control panel.	$439
5400-0050	Pump panel light LED package - RLP/MM. Includes (2) lights per side pump panel and (2) lights for angled upper control panel.	$733
5400-0057	Dome lts red/white 4" LED (4). Lights to be located two front and two rear. White light wired through door and light assembly mounted rocker switch. Red light through light assembly mounted rocker switch.	$1,377
5400-0059	Optronics model QH-3000 handheld 12v spotlight. To be hardwired on officer's side of cab dash.	$138
5400-0060	Spotlight Specialty 2150 hand held located on driver's side 3 x 3 post - hardwired.	$356
5400-0061	Golight model 2049 remote control spotlight with black housing. If one is selected it will be located centered on cab roof on a pedistal to rear of lightbar. If two are selected, they will be located one each side of cab roof to rear of lightbar.	$788
5400-0062	Code 3 model GLB3200 remote control spotlight with black housing. If one is selected it will be located centered on cab roof on a pedistal to rear of lightbar. If two are selected, they will be located one each side of cab roof to rear of lightbar.	$1,126

5400-0064	Dome Lts Red/White 4" LED (5). Lights to be located two front and three rear. White light wired through door and light assembly mounted rocker switch. Red light through light assembly mounted rocker switch.	$1,720
5400-0065	Maplight-Little Lt 18" Flex LED. Location: [#LOC].	$235
5400-0071	Spotlight Collins CL-12-M hand held located on officer's side of cab dash - hardwired. Includes Handle Lok 1004-2 bracket.	$430
5400-0076	Golight model 2020 permanent spotlight. Location: Centered top of lightbar.	$624
5400-0080	FRC Night Master light with external push-up pole. Locate [#LOC]. Switched on light head.	$1,135
5400-0081	Golight model 2067 remote control spotlight with white housing. If one is selected it will be located centered on cab roof on a pedistal to rear of lightbar. If two are selected, they will be located one each side of cab roof to rear of lightbar.	$788
5400-0082	Maplight-Little Lt 18" Flex [#LOC]. Includes dimmer switch.	$205
5400-0083	Map light Sunnex HS 761-20 with red lens and dimmer switch. Location: Officer overhead console inboard of AC vent.	$266
5400-0084	SpotLt-Fed VisibeamII Remote. If one is select it will be located center on forward vista roof. If two are selected, they will be located one each side front corners of vista cab roof.	$630
5400-0085	Enclose pump panel LED light package with (3) lights per side pump panel. Side mount only.	$1,418
5400-0086	Spotlight Specialty 2150 hand held located on font of map box - hardwired.	$356
5400-0087	Map light Sunnex model HS741-27 with red lens. Location: [#LOC].	$284
5400-0090	Spotlight Specialty 2150 hand held located on officer's side 3 x 3 post - hardwired.	$356
5400-0091	Zico cornering light (PR) with polished stainless steel housing model #ZQL-SS-H7614 wired through turn signals. Includes cornering light relay. Lights to be directed downward. Location: (1) each side of gravel shield (forward).	$937
5400-0092	Weldon pump panel LED light package with (3) lights per side pump panel. Pump panels over 45" may require additional lights. Side mount only	$866
5400-0093	Golight model 2049 remote control spotlight with black housing (PR) located one each side of cab roof to rear of lightbar. Driver light control located on driver dash switch panel. Officer light control located on officer dash switch panel. (Quest cab onl	$1,576
5400-0097	Maplight-Havis Shield 12" Flex LED. Location: [#LOC].	$229
5400-0098	Pump panel LED light package with (3) Whelen 4"round lights per side pump panel. Pump panels over 45" may require additional lights. Side mount only.	$1,064
5400-0104	Spotlight Specialty 2150 hand held located on officer's side, side facing engine cover offset forward below cab dash - hardwired.	$356
5450-0002	Quartz light Kwik Raze 500W/110V without pole. Location(s): [#LOC]	$577
5450-0003	Quartz light KwikRaze 500W/110V model KR-905-I with internal telepole. Location(s): [#LOC]	$637
5450-0004	Quartz light KwikRaze 500W/110V model KR-SB-505-W/2-I with external telepole. Location(s): [#LOC]	$1,001
5450-0005	Quartz light Kwik Raze 500W/110V portable. Location(s): [#LOC].	$405
5450-0006	Quartz light KwikRaze 500W/110V model KR-SB-805-TM-I with external mount tripod telepole. Requires 110V receptacle. Location(s): [#LOC]	$1,489
5450-0007	Quartz light Kwik Raze 500W/110V with recess mount. Location(s): [#LOC].	$925
5450-0008	Quartz light Fire Research Focus 750W/110V model FCA510E-S75-SW with internal pull up pole. Location(s): [#LOC].	$1,414
5450-0009	Quartz light Fire Research Focus 750W/110V model FCA530-S75-SR-SW with side mount push-up pole. Location(s): [#LOC].	$1,493
5450-0010	Quartz light Fire Research Focus 1000W/240V model FCA200-M12 with recess mount. Location(s): [#LOC].	$793
5450-0011	Quartz light Fire Research Optimum 900W/240V model OPA200-R90 with recess mount. Location(s): [#LOC]	$1,038
5450-0012	Quartz light Fire Research Focus 750W/110V model FCA570-S75 without pole. Location(s): [#LOC]	$1,102
5450-0015	Quartz light Fire Research Focus 750W/110V model FCA600-S75-ON-FC603 with 40" telescopic tripod pole. Location(s): [#LOC].	$1,512
5450-0016	Quartz light Fire Research Focus 750W/110V model FCA540-S75-SW with side mount pull up pole. Location(s): [#LOC].	$1,467
5450-0019	Quartz light Fire Research Focus 750W/110V model FCA802-S75-01 with brow mount. Location(s): [#LOC].	$854
5450-0020	Quartz light Fire Research Focus 1500W/240V model FCA600-M15-ON-FC603 with telescopic tripod pole. Location(s): [#LOC]	$1,594
5450-0021	Quartz light Fire Research Optimum 750W/110V model OPA570-S75 without pole. Location(s): [#LOC]	$1,167
5450-0022	Quartz light Fire Research Optimum 150W/12V model OPA802-HD15-01 with brow mount. Includes switch in driver side overhead cab console. Location(s): [#LOC]	$1,442
5450-0023	Quartz light Fire Research Optimum 150W/12V model OPA510E-HD15-SW with internal pole. Includes switch in driver side overhead cab console. Location(s): [#LOC]	$1,725
5450-0024	Quartz light Fire Research Optimum 750W/110V model OPA510E-S75-SW with internal pull up pole. Location(s): [#LOC]	$1,456
5450-0028	Quartz light Fire Research Optimum 750W/110V model OPA530-S75-SR-SW with side mount external pole. Location(s): [#LOC]	$1,536
5450-0029	Quartz light Fire Research Optimum 750W/110V model OPA540-S75-SW with side mount pull up pole. Location(s): [#LOC]	$1,408
5450-0030	Quartz light Fire Research Optimum 750W/110V model OPA600-S75-ON-OP603 with 40" telescopic tripod pole. Location(s): [#LOC]	$1,528
5450-0031	Quartz light Fire Research Optimum 750W/110V model OPA802-S75-01 with brow mount. Location(s): [#LOC]	$913
5450-0032	Quartz light Fire Research Optimum 900W/240V model OPA600-R90-ON-OP603 with telescopic tripod pole. Location(s): [#LOC]	$1,624
5450-0033	Quartz light Fire Research Optimum 150W/12V model OPA530-HD15-SR-SW with side mount external pole. Includes switch in driver side overhead cab console. Location(s): [#LOC]	$1,927
5450-0034	Quartz light MagnaFire 900W/240V model KR-739-HD with portable base. Requires 220V receptacle. Location(s): [#LOC]	$596
5450-0035	Quartz light MagnaFire 900W/240V model KR-1939 with recess mount. Location(s): [#LOC]	$821
5450-0036	Quartz light MagnaFire 900W/240V model KR-SB-639 without pole. Location(s): [#LOC]	$954

5450-0037	Quartz light MagnaFire 900W/240V model KR-939-I with internal pole. Location(s): [#LOC]	$906
5450-0038	Quartz light MagnaFire 900W/240V model KR-SB-539-W/2-I with external pole. Location(s): [#LOC]	$1,187
5450-0039	Quartz light MagnaFire 900W/240V model KR-SB-839-TM-I with external mount tripod telepole. Requires 220V receptacle. Location(s): [#LOC]	$1,291
5450-0040	Quartz light MagnaFire 900W/240V model KR-1339 with low profile mount. Location(s): [#LOC]	$942
5450-0041	Quartz light MagnaFire 900W/240V model KR-1539 with cab brow mount. Not available in front center due to DOT lights. Location(s): [#LOC]	$836
5450-0042	Quartz light MagnaFire 70W/12V model KR-931-I-S with internal pole and switch on light head. Includes switch on warning light switch panel in cab. Location(s): [#LOC]	$1,446
5450-0043	Quartz light MagnaFire 70W/12V model KR-SB-531-W/2-I-S with external pole and switch on light head. Includes switch on warning light switch panel in cab. Location(s): [#LOC]	$1,718
5450-0044	Quartz light MagnaFire 70W/12V model KR-1531 with cab brow mount. Includes switch on warning light switch panel in cab. Location(s): [#LOC]. Not available in front center due to DOT lights.	$1,339
5450-0045	Quartz light MagnaFire 750W/120V model KR-736-HD with portable base. Requires 110V receptacle. Location(s): [#LOC]	$549
5450-0046	Quartz light MagnaFire 750W/120V model KR-1936 with recess mount. Location(s): [#LOC]	$853
5450-0047	Quartz light MagnaFire 750W/120V model KR-SB-636 without pole. Location(s): [#LOC]	$987
5450-0048	Quartz light MagnaFire 750W/120V model KR-936-I with internal pole. Location(s): [#LOC]	$978
5450-0049	Quartz light MagnaFire 750W/120V model KR-SB-536-W/2-I with external pole. Location(s): [#LOC]	$1,244
5450-0050	Quartz light MagnaFire 750W/120V model KR-SB-836-TM-I with external mount tripod telepole. Requires 110V receptacle. Location(s): [#LOC]	$1,433
5450-0051	Quartz light MagnaFire 750W/120V model KR-1336 with low profile mount. Location(s): [#LOC]	$879
5450-0052	Quartz light MagnaFire 750W/120V model KR-1536 with cab brow mount. Location(s): [#LOC]. Not available in front center due to DOT lights.	$775
5450-0053	Quartz light MagnaFire 750W/120V model KR-SB-436-I-XL with through body push up pole. Location(s): [#LOC]	$1,193
5450-0054	Quartz light KwikRaze 1500W/220V model KR-915-I with internal telepole. Location(s): [#LOC]	$724
5450-0055	Quartz light KwikRaze 1500W/220V model KR-SB-515-W/2-I with external telepole. Location(s): [#LOC]	$1,086
5450-0056	Quartz light KwikRaze 1500W/220V model KR-SB-815-TM-I with external mount tripod telepole. Requires 220V receptacle. Location(s): [#LOC]	$1,541
5450-0058	Quartz light Fire Research Optimum 1500W/240V model OPA510E-M15-SW with internal pull up pole. Location(s): [#LOC]	$1,556
5450-0059	Quartz light Fire Research Optimum 750W/110V portable model OPA700-S75-OP703. Location(s): [#LOC]	$777
5450-0060	Quartz light Fire Research Focus 750W/120V model FCA300U-S75 with brow mount. Location: Center of cab brow	$854
5450-0061	Quartz light MagnaFire 150W/12V model KR-SB-532-W/2-I-S with external pole and switch on light head. Includes switch in driver side overhead cab console. Location(s): [#LOC]	$1,854
5450-0062	Quartz light MagnaFire 750W/120V model KR-SB-236-I-SW2 SPCL with top raise external pole. Location(s): [#LOC]	$1,206
5450-0065	Quartz light Fire Research Optimum 1000W/240V model OPA656-M12-ON-OP603 with telescopic tripod pole. Location(s): [#LOC]	$1,624
5450-0067	Quartz light Fire Research Focus 500W/110V model FCA802-S50-01 with brow mount. Light head and mount to be powder coated black. Location(s): [#LOC]	$832
5450-0069	Quartz light MagnaFire 5000 500W/120V model KR-2555 with cab brow mount. Location(s): [#LOC]. Not available in front center due to DOT lights.	$686
5450-0070	Quartz light MagnaFire 5000 500W/120V model KR-SB-555-W/2-I with external pole. Location(s): [#LOC].	$1,077
5450-0072	Quartz light Fire Research Optimum 1500W/240V model OPA100 with internal pole. Location(s): [#LOC].	$1,430
5450-0073	Quartz light Fire Research Focus 750W/120V model FCA300U-S75 with brow mount. Light head and mount to be powder coated black. Location: Center of cab brow	$898
5450-0074	Quartz light timer (ea).	$128
5450-0075	Quartz light Fire Research Optimum 900W/240V model OPA510E-R90-SW with top raise pole. Location(s): [#LOC].	$1,536
5450-0076	Quartz light MagnaFire 5000 750W/120V model KR-3556 with front cab brow mount. Quest cabs only. Location(s): [#LOC]	$775
5450-0077	Quartz light MagnaFire 5000 750W/120V model KR-3656 with side cab brow mount. Quest cabs only. Location(s): [#LOC]	$775
5450-0078	Quartz light Fire Research Focus 750W/110V model FCA802-S75-01 with brow mount. Light head and mount to be powder coated black. Location(s): [#LOC]	$898
5450-0079	Quartz light MagnaFire 750W/120V model KR-1536 with cab brow mount. Light head and mount to be powder coated black. Location(s): [#LOC]. Not available in front center due to DOT lights.	$820
5450-0080	Quartz light Fire Research Focus 750W/110V model FCA830-S75 with brow mount. Quest cab only. Location(s): [#LOC].	$854
5450-0081	Quartz light Fire Research Optimum 750W/110V model OPA656-S75-ON-OP603 with 28" telescopic tripod pole. Location(s): [#LOC]	$1,528
5450-0082	Quartz light Fire Research Focus 750W/110V model FCA656-S75-ON-FC603 with 28" telescopic tripod pole. Location(s): [#LOC].	$1,512
5450-0083	Quartz light Fire Research Focus 1500W/240V model FCA530-M15-SR-SW with side mount push up pole. Location(s): [#LOC]	$1,499
5450-0084	Quartz light Fire Research Focus 150W/12V model FCA510E-D15-SW with internal pole. Includes switch in driver side overhead cab console. Location(s): [#LOC].	$1,073
5450-0086	Quartz light MagnaFire 150W/12V model KR-1532 with cab brow mount. Includes switch on warning light switch panel in cab. Location(s): [#LOC]. Not available in front center due to DOT lights.	$1,409
5450-0087	Quartz light MagnaFire 70W/12V model KR-SB-531-W/2-I with external pole. Includes switch on warning light switch panel in cab. Location(s): [#LOC]	$1,668

5450-0088	Quartz light MagnaFire 70W/12V model KR-SB-631 without pole. Includes switch on warning light switch panel in cab. Location(s): [#LOC].	$1,455
5450-0089	Quartz light MagnaFire 900W/240V model KR-SB-539-W/2-I with external pole. Light head to be powder coated black. Location(s): [#LOC].	$1,230
5450-0090	Aerial circuit timer.	$240
5450-0092	Quartz light Fire Research Focus 750W/110V model FCA530-S75-SR-SW with side mount push-up pole. Light head and mounts to be powder coated black. Location(s): [#LOC].	$1,538
5450-0093	Quartz light MagnaFire 70W/12V model KR-3551 with cab brow mount. Includes switch on warning light switch panel in cab. Quest cab only. Location(s): [#LOC].	$1,339
5450-0094	Quartz light Extenda-Lite 750W/110V model E-4750-EX-TL-UI-EX. Location(s): [#LOC].	$812
5450-0095	Quartz light Fire Research Focus 150W/12V model FCA300U-D15 with brow mount. Includes switch in driver side overhead cab console. Location: center of cab brow.	$985
5450-0096	Quartz light Fire Research Optimum 1000W/110V portable model OPA700-M10-OP703. Location(s): [#LOC].	$887
5450-0097	Quartz light MagnaFire 70W/12V model KR-2551 with cab brow mount. Includes switch on warning light switch panel in cab. Location(s): [#LOC]. Not available in front center due to DOT lights.	$1,339
5450-0098	Quartz light Fire Research Optimum 1500W/240V model OPA600-M15-ON-OP603 with telescopic tripod pole. Location(s): [#LOC]	$1,688
5450-0099	Quartz light Fire Research Optimum 1500W/240V model OPA200-M15 with recess mount. Location(s):[#LOC]	$948
5450-0101	Quartz light MagnaFire 150W/12V model KR-SB-532-W/2-I-S with external pole and switch on light head. Includes switch on pump operator panel. Location(s): [#LOC]	$1,854
5450-0102	Quartz light Fire Research Focus 1000W/120V model FCA530-M10-SR-SW-ON with external push up pole. Location(s): [#LOC].	$1,594
5450-0113	Quartz light MagnaFire 150W/12V model KR-932-I-S with internal pole and switch on light head. Includes switch on warning light switch panel in cab. Location(s): [#LOC].	$1,545
5450-0114	Quartz light Fire Research Focus 1000W/120V model FCA200-M10 with recess mount. Location(s): [#LOC].	$793
5450-0115	Light Whelen Pioneer Plus model PFP1 with brow mount. Includes switch in driver side overhead console. Location(s): [#LOC].	$1,469
5450-0116	Quartz light Fire Research Focus 500W/110V model FCA600-S50-ON-FC603 with 40" telescopic tripod pole. Location(s): [#LOC].	$1,512
5450-0117	Light Whelen Pioneer Plus model PFP2 with brow mount and PFLASH. Includes switch in driver side overhead console. Location(s): [#LOC].	$2,247
5450-0118	Quartz light Fire Research Focus 1000W/240V model FCA802-M12-01 with brow mount. Location(s): [#LOC].	$906
5460-0000	Night Scan Powerlite NS10-3000M light tower with four 750 watt 115 volt MagnaFire quartz light heads. Control to be located next to the breaker box. Requires air brakes or air system and auxiliary air tank. Tower to be located [#LOC].	$20,690
5460-0001	Night Scan Powerlite NS10-4500M light tower with six 750 watt 115 volt MagnaFire quartz light heads. Control to be located next to the breaker box. Requires air brakes or air system and auxiliary air tank. Tower to be located [#LOC].	$22,549
5460-0002	Night Scan Powerlite NS15-3000M light tower with four 750 watt 115 volt MagnaFire quartz light heads. Control to be located next to the breaker box. Requires air brakes or air system and auxiliary air tank. Tower to be located [#LOC].	$21,269
5460-0003	Night Scan Powerlite NS15-4500M light tower with six 750 watt 115 volt MagnaFire quartz light heads. Control to be located next to the breaker box. Requires air brakes or air system and auxiliary air tank. Tower to be located [#LOC].	$22,909
5460-0004	Night Scan Powerlite NS15-6000A light tower with four 1500 watt 230 volt quartz light heads. Control to be located next to the breaker box. Requires air brakes or air system and auxiliary air tank. Tower to be located [#LOC].	$20,060
5460-0005	Night Scan Powerlite NS15-6000OPT light tower with four 1500 watt 230 volt Optimum quartz light heads. Control to be located next to the breaker box. Requires air brakes or air system and auxiliary air tank. Tower to be located [#LOC].	$19,791
5460-0006	Night Scan Powerlite NS15-9000OPT light tower with six 1500 watt 230 volt Optimum quartz light heads. Control to be located next to the breaker box. Requires air brakes or air system and auxiliary air tank. Tower to be located [#LOC].	$24,772
5460-0010	Will-Burt Night Scan extension harness. Required when tower is installed on custom cab roof or more than 20' from controller location.	$1,058
5460-0011	Night Scan Chief NS6-3000A light tower with two 1500 watt 230 volt quartz light heads. Control to be located next to the breaker box. Tower to be located [#LOC].	$12,197
5460-0013	Command Light-light tower model CL 605. Includes (6) 500 watt quartz halogen lights and a green strobe. Location: [#LOC].	$19,362
5460-0014	Command Light light tower model CL 610. Includes (6) 650 watt quartz halogen lights and a green strobe. Location: [#LOC].	$17,347
5460-0019	Command Light light tower model CL 611. Includes (6) 1000 watt quartz halogen lights and a green strobe. Location: [#LOC].	$18,697
5460-0021	Command Light light tower model CL 615. Includes (6) 1500 watt quartz halogen lights and a green strobe. Location: [#LOC].	$18,697
5460-0022	Command Light light tower model KL450. Includes (6) 500 watt quartz halogen lights and a green strobe. Location: [#LOC].	$12,751
5460-0024	Command Light light tower model SL429-RT. Includes (2) 1500 watt quartz halogen lights. Control to be located next to the breaker box. Location: [#LOC].	$8,223
5460-0025	Night Scan Powerlite NS15-5400M light tower with six 900 watt 230 volt MagnaFire quartz light heads. Control to be located next to the breaker box. Requires air brakes or air system and auxiliary air tank. Tower to be located [#LOC].	$21,509
5460-0026	Night Scan Chief NS6-3000A light tower with two 1500 watt 230 volt quartz light heads. Control to be located next to the breaker box. Tower to be located [#LOC].	$12,197
5460-0027	Command Light tower option, back lighting.	$1,910

5460-0028	Command Light light tower model KL450. Includes (6) 500 watt quartz halogen lights and a red strobe. Location: [#LOC].	$12,751
5460-0030	Command Light light tower model KL475HS. Includes (6) 750 watt Magnafire quartz halogen lights and a green strobe. Location: [#LOC].	$13,355
5460-0031	Night Scan Chief NS6-3000M light tower with four 750 watt 115 volt MagnaFire quartz light heads. Control to be located next to the breaker box. Tower to be located [#LOC].	$13,403
5460-0032	Command Light light tower model KL475HS. Includes (6) 750 watt Magnafire quartz halogen lights and a red strobe. Location: [#LOC].	$13,355
5460-0033	Night Scan Powerlite NS15-3600M light tower with four 900 watt 230 volt MagnaFire quartz light heads. Control to be located next to the breaker box. Requires air brakes or air system and auxiliary air tank. Tower to be located [#LOC].	$18,996
5460-0034	Command Light light tower model CL 615. Includes (6) 1500 watt quartz halogen lights, (2) 1000 watt Metal Halide light heads, and a green strobe. Locate [#LOC].	$19,773
5460-0036	Night Scan Chief NS2.3-3000M light tower with four 750 watt 115 volt MagnaFire quartz light heads. Control to be located next to the breaker box. Requires air brakes or air system and auxiliary air tank. Tower to be located [#LOC].	$12,601
5460-0038	Command Light light tower model CL 615. Includes (6) 1000 watt quartz halogen lights and a green strobe. Location: [#LOC].	$18,697
5460-0040	Night Scan Powerlite NS15-6000OPT light tower with four 1500 watt 230 volt Optimum quartz light heads. Light heads and base covers painted job color. Control to be located next to the breaker box. Requires air brakes or air system and auxiliary air tank.	$22,729
5460-0043	Night Scan Powerlite NS10-6000OPT light tower with four 1500 watt 230 volt Optimum quartz light heads. Control to be located next to the breaker box. Requires air brakes or air system and auxiliary air tank. Tower to be located [#LOC]. Ahead of vista loca	$22,549
5470-0000	Receptacle twist lock 15A/110V 3 wire NEMA L5-15 with cover plate. Location: [#LOC]	$287
5470-0001	Receptacle twist lock 20A/110V 3 wire NEMA L5-20 with cover plate. Location: [#LOC]	$300
5470-0002	Receptacle twist lock 30A/110V 3 wire NEMA L5-30 with cover plate. Location: [#LOC]	$323
5470-0003	Receptacle household 15A/110V duplex 3-prong NEMA 5-15 with cover plate. Location: [#LOC]	$261
5470-0004	Receptacle household 20A/110V duplex 3-prong NEMA 5-20 with cover plate interior mounted wired to inlet receptacle. Location: [#LOC].	$282
5470-0005	Receptacle household 15A/110V Daniel Woodhead duplex 3 wire NEMA 5-15 w/Daniel Woodhead cover plate. Location: [#LOC]	$522
5470-0006	Receptacle twist lock 15A/110V Daniel Woodhead 3 wire NEMA L5-15 w/Daniel Woodhead cover plate. Location: [#LOC]	$469
5470-0007	Receptacle twist lock 15A/220V Daniel Woodhead 3 wire NEMA L6-15 w/Daniel Woodhead cover plate. Location: [#LOC]	$594
5470-0008	Receptacle twist lock 20A/110V Daniel Woodhead 3 wire NEMA L5-20 w/Daniel Woodhead cover plate. Location: [#LOC]	$484
5470-0009	Receptacle twist lock 20A/220V Daniel Woodhead 3 wire NEMA L6-20 w/Daniel Woodhead cover plate. Location: [#LOC]	$640
5470-0010	Receptacle twist lock 20A 110V/220V Daniel Woodhead 4 wire NEMA L14-20 w/Daniel Woodhead cover plate. Location: [#LOC]	$663
5470-0011	Receptacle twist lock 15A/220V 3 wire NEMA L6-15 with cover plate. Location: [#LOC]	$418
5470-0012	Receptacle twist lock 20A/220V 3 wire NEMA L6-20 with cover plate. Location: [#LOC]	$418
5470-0013	Receptacle twist lock 20A 110V/220V 4 wire NEMA L14-20 with cover plate. Location: [#LOC].	$569
5470-0014	Receptacle twist lock 30A/220V 3 wire NEMA L6-30 with cover plate. Location: [#LOC]	$569
5470-0015	Receptacle twist lock 30A 110V/220V 4 wire NEMA L14-30 with cover plate. Location: [#LOC]	$564
5470-0016	Receptacle shoreline 30A/110V with auto transfer switch. The receptacle shall be located [#LOC].	$965
5470-0017	Receptacle household 20A/110V duplex 3-prong NEMA 5-20 with cover plate. Location: [#LOC]	$272
5470-0018	Receptacle shoreline 50A/110V with auto transfer switch. The receptacle shall be located [#LOC].	$974
5470-0019	Receptacle FirePower 20A/110V model FP-11 with cover plate. Location: [#LOC]	$331
5470-0020	Receptacle 12V military with A pin Positive, B pin Negative, C pin Blank. Location: [#LOC]	$226
5470-0021	12 volt power point wired battery hot. Location [#LOC]	$53
5470-0024	Receptacle 15A/110V duplex with (1) 3-prong NEMA 5-15 and (1) twist lock NEMA L5-15 with cover plate. Location: [#LOC].	$305
5470-0025	Receptacle household 30A/110V 3-prong NEMA 5-30 with cover plate. Location: [#LOC]	$311
5470-0026	Receptacle household 15A/110V duplex 3-prong NEMA 5-15 with cover plate interior mounted wired to inlet receptacle. Location: [#LOC]	$261
5470-0027	Household switch with weaterproof cover located near receptacle at [#LOC]. Switch to operate single leg of this duplex receptacle.	$472
5470-0028	Receptacle household 20A/110V Daniel Woodhead duplex 3 wire NEMA 5-20 w/Daniel Woodhead cover plate. Location: [#LOC].	$536
5470-0029	Receptacle Hubbell twist lock 20A 110V/250V 3 wire NON-NEMA with cover plate. Location: [#LOC].	$356
5470-0030	Receptacle twist lock 15A/110V 3 wire NEMA L5-15 with yellow Daniel Woodhead cover plate. Location: [#LOC].	$350
5470-0031	Receptacle twist lock 15A/110V duplex 3 wire NEMA L5-15 with yellow Daniel Woodhead cover plate. Location: [#LOC]. Each top duplex will be hooked to toogle switch next to it.	$594
5470-0032	Receptacle 12V Marinco model 2018BR with model 2018MB cover wired battery hot. Includes model 2018BP male connector. Location: [#LOC].	$396
5500-0004	Code3 V-con #3692 siren recessed mounted.	$695
5500-0005	Federal electronic Q2B-EF siren. Includes 200 watt speaker with square "EF" grill. Speaker location: [#LOC].	$3,506
5500-0006	Federal electronic Q2B-Q siren. Includes "Q" grill. Speaker location: [#LOC].	$3,976
5500-0009	Federal PA300 siren recessed mounted.	$651
5500-0010	Federal Q2B siren - Flush mounted in bumper. Location: [#LOC].	$2,794
5500-0011	Federal Q2B siren - Pedestal mounted on bumper. Location: [#LOC].	$2,516

5500-0012	Prewire for Federal Q2B mechanincal siren.	$259
5500-0014	Unitrol #480K siren.	$1,490
5500-0015	Whelen model 295SLSA1 siren with microphone (replaced 295HFSA1). N/A in California.	$865
5500-0016	Code3 V-con #3672 siren recessed mounted.	$695
5500-0017	Whelen model 295HFSM1 siren with mechanical siren tone and microphone. N/A in California.	$952
5500-0019	Code 3 #3997 siren. Requires (1) 200 watt or (2) 100 watt speakers.	$1,600
5500-0020	Federal PA4000 siren recessed mounted.	$697
5500-0022	Federal PA300 siren mounted on electrical access panel between the driver and officer front seats.	$651
5500-0026	(MS100 speakers Obsolete from Vendor)Federal electronic Q2B-EF siren. Includes two MS100 speakers with square "EF" grills. Speaker location: [#LOC].	$3,629
5500-0027	Signal Vehicle Products model SS741MG siren recessed mounted.	$549
5500-0028	Integrated Siren System with dual control heads, seperate PA controls with remote mircrophone and volume switch	$799
5500-0030	Code 3 #3997R siren. Requires (1) 200 watt or (2) 100 watt speakers.	$1,600
5500-0031	Whelen model 295HFSA7 siren with microphone.	$1,354
5500-0032	Federal / Unitrol #U480K-4 siren.	$1,436
5500-0034	Federal Rumbler secondary siren. Includes amp, timer, and two speakers mounted under vehicle.	$1,143
5500-0035	Powercall DX5100 siren. For use with (1) 100 watt speaker only.	$811
5500-0036	Whelen model 295HFSC9 siren with microphone. N/A in California.	$1,088
5500-0037	Federal PA300 siren recessed mounted. Microphone to be removed and a plug is to be installed in the wiring hole.	$651
5500-0038	Federal / Unitrol #UTM4 siren.	$1,452
5500-0040	Powercall DX5200 siren. For use with (1) 200 watt speaker or (2) 100W speakers.	$870
5500-0041	Federal electronic Q2B-EF siren. Includes two ES100 speakers with square "EF" grills. Speaker location: [#LOC].	$3,629
5500-0044	Whelen model 295HFSA7 siren with microphone. Microphone to be removed (shipped loose) and a plug is to be installed in the wiring hole.	$1,354
5510-0002	Speaker Federal BP200-EF mounted though bumper. Location: [#LOC].	$1,093
5510-0003	Speaker Federal CP100S pedestal mounted. Location: [#LOC].	$713
5510-0006	Speaker Federal MS100-MSBMT. Location: [#LOC].	$422
5510-0007	Speaker Cast Products SA2401 100W thru bumper. Location: [#LOC].	$476
5510-0008	Speaker Cast Products SA3501 100W thru bumper. Location: [#LOC].	$527
5510-0009	Speaker Federal TS100-N mounted on pump panel.	$430
5510-0012	Speaker Federal TS100 thru bumper. Location: [#LOC].	$505
5510-0013	Speaker Federal Dynamax MS100-EF thru bumper. Location: [#LOC].	$505
5510-0016	Code 3 PB100C electronic siren speaker recessed in front bumper. Location: [#LOC].	$496
5510-0017	Speaker Cast Products SA2403 100W thru bumper. Location: [#LOC].	$476
5510-0018	Whelen SA122FMP electronic siren speaker recessed in front bumper. Location: [#LOC].	$523
5510-0021	Speaker Federal TS100-N mounted on driver side front compartment face.	$430
5510-0023	Speaker Atkinson Dynamics (Federal) mounted on pump panel.	$580
5510-0024	Speaker Federal TS100 with electric "F" grille thru bumper. Location: [#LOC].	$578
5510-0026	Code 3 FM100C electronic siren speaker recessed in front bumper. Location: [#LOC].	$571
5510-0029	Speaker Federal Dynamax ES100-EF thru bumper. Location: [#LOC].	$505
5550-0006	Whelen LED 6/2/2 lower level warning light package. Includes (6) 600 series (2) 400 series and (2) 500 series light heads w/weatherproof connectors. Locate side facing lights: [#LOC].	$3,006
5550-0007	Whelen LED 8/2 lower level warning light package. Includes (8) 600 series and (2) 500 series light heads w/weatherproof connectors. Locate side facing lights: [#LOC].	$3,239
5550-0008	Whelen strobe/LED 6/2/2 lower level warning light package. Includes (6) 600 series strobes, (2) 400 series strobes and (2) 500 series LED light heads w/weatherproof connectors and required power supplies. Locate side facing lights: [#LOC].	$2,901
5550-0010	Whelen 600 series LED lower level warning light package. Includes (10) LED light heads w/weatherproof connectors. Locate side facing lights: [#LOC].	$3,562
5550-0012	Whelen 600 series strobe lower level warning light package. Includes (10) strobe lights w/weatherproof connectors and required power supplies. Locate side facing lights: [#LOC].	$3,352
5550-0013	Federal Signal strobe/halogen lower level warning light package. Includes (8) strobe, (2) GH1F halogen lts and required power supplies. Locate side facing lights: [#LOC].	$2,829
5550-0014	Federal Signal GS5 strobe lower level warning light package. Includes (10) Lights and required power supplies. Locate side facing lights: [#LOC].	$3,228
5550-0019	Federal Signal MOD1F 8/2 LED lower level warning light package. Includes (8) MOD1F LED surface mounted lights with (2) Model 3300-04 LED lights with an external flasher. Locate side facing lights: [#LOC].	$2,356
5550-0020	Federal Signal MOD1F LED lower level warning light package. Includes (10) MOD1F surface mounted light heads with external flasher. Locate side facing lights: [#LOC].	$2,492
5550-0021	Federal Signal GL5 LED lower level warning light package. Includes Ten (10) GL5-R lights. Locate side facing lights: [#LOC].	$2,583
5550-0022	Federal Signal MOD1X LED lower level warning light package. Includes Ten (10) MOD1X red recessed light heads. Locate side facing lights: [#LOC].	$2,178
5550-0023	Federal Signal MOD2X 8/2 LED lower level warning light package. Includes (8) MOD2X LED lights and (2) Model 3300-04 LED lights. Locate side facing lights: [#LOC].	$2,913
5550-0024	Federal Signal MOD2X LED lower level warning light package. Includes (10) MOD2X LED recessed light heads. Locate side facing lights: [#LOC].	$3,180
5550-0028	Code3 strobe/halogen 6/4 lower level warning light package. Includes (6) 40 series strobe lights and (4) OL135 halogen lights and required power supplies. Locate side facing lights: [#LOC].	$4,369
5550-0029	Code3 halogen 4/6 lower level warning light package. Includes Includes (6) 41 series and (4) OL135 halogen lights. Locate side facing lights: [#LOC].	$2,195

5550-0030	Code3 model 65 red LED lower level warning light package. Includes (10) LED lights. Locate side facing lights: [#LOC].	$3,764
5550-0049	Code3 LED 6/2/2 lower level warning light package. Includes (8) model 65 red LED and (2) LXEX1F-R LED lights. Includes chrome bezels where applicable. Locate side facing lights: [#LOC].	$2,979
5550-0052	Flash rate for Federal LED lower level warning lights to be set at pattern 2, alternating triple flash (102 TFPM).	$82
5550-0053	Flash rate for Federal LED lower level warning lights to be set at pattern 8, alternating single flash (150 FPM).	$82
5550-0054	Whelen 600 series Super LED lower level warning light package. Includes (10) red LED light heads w/chrome flanges. Locate side facing lights: [#LOC].	$2,828
5550-0055	Federal Signal QuadraFlare LED lower level warning light package. Includes (10) QL64XF-R LED light heads with bezels. Locate side facing lights: [#LOC].	$2,364
5550-0056	Federal Signal MOD1X 8/2 LED lower level warning light package. Includes (8) MOD1X LED lights and (2) Model 3300-04 LED lights. Locate side facing lights: [#LOC].	$2,393
5550-0057	Federal Signal QuadraFlare LED lower level warning light package. Includes (8) QL64XF-R LED light heads with bezels and (2) Model 3300-04 LED light heads. Locate side facing lights: [#LOC].	$1,985
5550-0059	Whelen Super LED lower level warning light package. Includes (8) red 600 LED light heads and (2) red 500 LED light heads w/chrome flanges. Locate side facing lights: [#LOC].	$2,672
5550-0067	Flash rate for Federal QuadraFlare LED lower level warning lights to be set at pattern 4, alternating quad flash (75 QFPM).	$82
5550-0069	Flash rate for Federal QuadraFlare LED lower level warning lights to be set at pattern 5, alternating double flash (150 DFPM).	$82
5550-0072	Whelen 600 series Super LED lower level warning light package. Includes (8) red/amber and (2) red LED light heads w/chrome flanges. Locate side facing lights: [#LOC].	$3,188
5550-0073	Whelen Super LED lower level warning light package. Includes (8) 600 Super LED light heads and (2) 900 Super LED light heads w/chrome flanges where applicable. Locate side facing lights: [#LOC].	$3,111
5550-0091	Whelen strobe/LED 6/2/2 lower level warning light package. Includes (6) 600 series strobes, (2) 700 series strobes and (2) 500 series LED light heads w/weatherproof connectors and required power supplies. Locate side facing lights: [#LOC].	$2,965
5550-0092	Whelen strobe/LED 6/2/2 lower level warning light package. Includes (6) 600 series super LED, (2) 700 series split lens strobes and (2) 500 series super LED light heads w/weatherproof connectors and required power supplies. Locate side facing lights: [#LO	$3,382
5550-0093	Whelen Super LED lower level warning light package. Includes (6) 600 LED red light heads, (2) 400 LED red light heads and (2) 500 red LED light heads w/chrome flanges. Locate side facing lights: [#LOC]	$2,549
5550-0094	Federal Signal strobe lower level warning light package. Includes (8) GS5 strobes and (2) GS2 strobes lts. All lenses to be blue except mid-body which are red. Locate side facing lights: [#LOC]	$3,228
5550-0095	Whelen Super LED lower level warning light package. Includes (7) 600 red LED light heads, and (3) 600 blue LED light head w/chrome flanges. Locate side facing lights: [#LOC]	$2,828
5550-0096	Weldon Diamonback V46 LED lower level warning light package. Includes (10) red LED light heads w/chrome flanges. Locate side facing lights: [#LOC].	$2,870
5550-0097	Whelen 400 series linear Super LED lower level warning light package. Includes (10) red LED light heads w/chrome flanges. Locate side facing lights: [#LOC].	$4,324
5550-0098	Federal Signal QuadraFlare LED lower level warning light package. Includes (8) QL64XF-R LED light heads with bezels and (2) Model 3300-04 LED light heads side forward mounted. Locate side facing lights: [#LOC].	$1,985
5550-0099	Whelen Super LED lower level warning light package. Includes (4) red 600 LED light heads, (4) red/clear 600 split LED light heads and (2) red 500 LED light heads w/chrome flanges. Locate side facing lights: [#LOC].	$3,551
5550-0100	Whelen Super LED lower level warning light package. Includes (6) red 600 LED light heads and (4) red 500 LED light heads w/chrome flanges. Locate side facing lights: [#LOC].	$2,672
5550-0104	Whelen 600 series Super LED lower level warning light package. Includes (8) red and (2) red/white LED light heads w/chrome flanges. Locate side facing lights: [#LOC].	$3,299
5550-0106	Whelen Super LED lower level warning light package. Includes (6) 600 red LED light heads, (2) 400 amber LED light heads and (2) 500 red LED light heads w/chrome flanges. Locate side facing lights: [#LOC].	$2,549
5550-0107	Whelen Super LED lower level warning light package. Includes (8) red 600 LED light heads and (2) red 500 LED light heads w/chrome flanges. Locate side facing lights: [#LOC].	$2,672
5550-0108	Federal Signal QuadraFlare LED lower level warning light package. Includes (4) QL64XF-R LED light heads, (4) QL64XF-B LED light heads, (1) Model 360501-04 LED light head and (1) Model 360501-03 light head. Lights to alternate red/blue around unit; see spe	$2,061
5550-0109	Federal Signal QuadraFlare LED lower level warning light package. Includes (5) QL64XF-R LED light heads with bezels and (5) QL64XF-B LED light heads with bezels. Locate side facing lights: [#LOC].	$2,364
5550-0110	Whelen Super LED lower level warning light package. Includes (4) red 600 LED light heads, (4) blue 600 LED light heads, (1) red 500 LED light head and (1) blue 500 LED light head. LIghts to alternate red/blue around unit; see specification. Locate side fa	$2,672
5550-0114	Weldon Diamonback V46 LED lower level warning light package. Includes (10) red LED light heads w/clear lenses and chrome flanges. Locate side facing lights: [#LOC].	$2,870
5550-0116	Federal Signal QuadraFlare LED lower level warning light package. Includes (7) QL64XF-R LED, (1) QL64XF-B LED light heads with bezels and (2) Model 360501-04 LED light heads. Locate side facing lights: [#LOC].	$1,985
5550-0117	Whelen Super LED lower level warning light package. Includes (6) 600 Super LED light heads (2 red forward/2 red rearward/2 amber rearward) and (6) side facing 500 Super LED red light heads w/chrome flanges where applicable. Requires additional side facing	$3,645
5550-0123	Whelen M6 Super LED lower level warning light package. Includes (8) red M6R LED light heads and (2) red 500 Super LED light heads w/chrome flanges. Locate side facing lights: [#LOC].	$3,618
5550-0125	Whelen M6RC Super LED lower level warning light package. Includes (8) red M6RC LED light heads and (2) red 500 Super LED light heads w/chrome flanges. Locate side facing lights: [#LOC].	$3,618
5600-0002	Warning light Whelen 600 series strobe (PR) [#COL]. Requires power pack or option with spare power pack outlets. Includes weatherproof connectors. Requires engineering approval for NFPA applications. Location(s): [#LOC]	$419

5600-0005	Warning light Whelen 700 series strobe (PR) [#COL]. Requires power pack or option with spare power pack outlets. Includes weatherproof connectors. Requires engineering approval for NFPA applications. Location(s): [#LOC]	$415
5600-0008	Warning light Whelen 900 series strobe (PR) [#COL]. Requires power pack or option with spare power pack outlets. Includes weatherproof connectors. Requires engineering approval for NFPA applications. Location(s): [#LOC]	$419
5600-0011	Whelen power supply model UPS64LX 4Place 75Watt strobe.	$541
5600-0012	Whelen power supply model ISP148 eight (8) place 140watt strobe.	$1,271
5600-0013	Whelen power supply model ISP188 eight (8) place 180watt strobe.	$1,360
5600-0020	Warning light Whelen 600 series LED (PR) amber. Location: [#LOC] Surface mounted with weatherproof connector. Requires engineering approval for NFPA applications.	$734
5600-0021	Warning light Whelen 600 series LED (PR) red. Surface mounted with weatherproof connector. Location: [#LOC]	$734
5600-0022	Warning light Whelen 700 series LED (PR) red. Surface mounted with weatherproof connector. Location: [#LOC]	$642
5600-0023	Warning light Whelen 900 series LED (PR) amber. Location: [#LOC] Surface mounted with weatherproof connector. Requires engineering approval for NFPA applications.	$1,329
5600-0024	Warning light Whelen 900 series LED (PR) red. Surface mounted with weatherproof connector. Location: [#LOC]	$1,329
5600-0025	Warning light Whelen 600 series halogen (PR) [#COL]. Includes weatherproof connectors. Requires engineering approval for NFPA applications. Location(s): [#LOC]	$339
5600-0027	Warning light Whelen 900 series halogen (PR) [#COL]. Includes weatherproof connectors. Requires engineering approval for NFPA applications. Location(s): [#LOC]	$339
5600-0029	Code3 Model #550 rotating (PR) with [#COL] domes. Location: [#LOC].	$362
5600-0030	Code3 Model #550/#41. Includes (2) #550's with red domes and (2) #41 lights with [#COL] lenses. Total four (4) lights at rear upper. Location of Model 550 lights: [#LOC].	$935
5600-0031	Code 3 / PSE Oscilaser warning light (PR). Lights are to be located on front of cab in the inboard position of the quad bezel.	$563
5600-0033	Whelen beacon with halogen rotator and 700 series strobe (PR) Model B6R with red domes and [#COL] strobes. Location [#LOC]. Requires power pack.	$803
5600-0034	Federal Model SY12FS Sentry (PR) with [#COL] domes. Location: [#LOC].	$363
5600-0036	Federal Model IVP100 Vector pod (PR) with [#COL] domes. Location: [#LOC].	$433
5600-0037	Hazard (door ajar) light Federal Signal model FB3 Comp R. Location: [#LOC]	$225
5600-0040	Whelen beacon Model RB6PAP (PR) with amber lenses. Located one (1) each side at rear. Location: [#LOC]	$443
5600-0041	Warning light Federal Signal GS2 strobe (PR) [#COL]. Requires power pack or option w/spare power pack outlets. Requires engineering approval for NFPA applications. Location(s): [#LOC]	$404
5600-0046	Warning light Federal Signal GH1F halogen (PR) [#COL]. Location(s): [#LOC]	$302
5600-0047	Warning light Federal Signal Model 3300-04 LED w/ bezel (PR). Surfaced mounted with red lens. Location: [#LOC]	$376
5600-0048	Warning light Federal Signal GL5 LED (PR) red. Location: [#LOC]	$600
5600-0049	Warning light Federal Signal GS5 strobe (PR) [#COL]. Requires power pack or option w/spare power pack outlets. Requires engineering approval for NFPA applications. Location(s): [#LOC]	$370
5600-0051	Warning light Federal Signal GL5 LED (PR) amber. Location: [#LOC]	$619
5600-0052	Federal Signal SPS4-NFPA (4) place 90 watt strobe power supply. Required when using Federal Signal strobes.	$536
5600-0053	Federal Signal SPS8-NFPA (8) place 192 watt strobe power supply. Required when using Federal Signal strobes.	$956
5600-0054	Warning light Federal Signal MOD2F LED (PR) clear. Surface mounted. Location: [#LOC]	$956
5600-0055	Warning light Federal Signal MOD1F LED (PR) clear. Surface mounted. Location: [#LOC]	$575
5600-0056	Warning light Federal Signal MOD1F LED (PR) red. Surface mounted. Location: [#LOC]	$504
5600-0057	Warning light Federal Signal MOD1X LED (PR) red. Recess mounted. Location: [#LOC]	$535
5600-0058	Warning light Federal Signal MOD2F LED (PR) red. Surface mounted. Location: [#LOC]	$838
5600-0059	Warning light Federal Signal MOD3F LED (PR) red. Surface mounted. Location: [#LOC]	$1,066
5600-0060	Warning light Federal Signal Meteor with clear lens (PR). Located on front of cab in quad bezels inboard of NFPA lower level warning light.	$561
5600-0061	Mars 888 pedestal mounted traffic clearing light on front of cab above grill.	$890
5600-0062	Warning light Roto Ray 200 with red lenses. N/A on commercial chassis. Locate on front of cab center above grille.	$1,537
5600-0063	Warning light Roto Ray 200 with (2) red and (1) clear lenses. N/A on commercial chassis. Locate on front of cab center above grille.	$1,537
5600-0067	Federal Signal Model #100 beacon (PR) with [#COL] domes. Location: [#LOC].	$463
5600-0068	Warning light Federal Signal Meteor with clear lens and S/S pedistal mounted enclosure. Located on front of cab over grill.	$509
5600-0069	Warning light Federal Signal MOD2X LED (PR) red. Recess mounted. Location: [#LOC]	$723
5600-0074	Opticom Emitter 3M #792H. Emitter and control only. Wire through parking brake. Location: [#LOC].	$2,847
5600-0075	Opticom Emitter 3M #592 Chrome. Emitter and dash control only. Wire through parking brake. Location: [#LOC].	$3,383
5600-0078	Whelen Super LED beacon (PR) Model L31H with [#COL] domes. Location [#LOC].	$1,758
5600-0079	Whelen beacon with halogen rotator and 700 series LED (PR) Model B6TM with red domes and [#COL] LEDs. Location [#LOC].	$1,331
5600-0080	Whelen beacon with LED upper beacon and 700 series Super LED (PR) Model B6LED with red domes and [#COL] LEDs. Location [#LOC].	$2,694
5600-0081	Code 3 / PSE Oscilaser warning light (PR). Lights are to be located on front of cab above quad bezels.	$591
5600-0083	Warning light Code3 LXEX1F-R LED (PR). Surfaced mounted with clear lens. Location: [#LOC]	$669

5600-0085	Tomar EMIT3 Preemption Emitter with chrome housing. Includes pedistal mount and switch on dash. Wire through parking brake. Location: [#LOC].	$1,389
5600-0086	Whelen beacon Model RB6T (PR) with [#COL] domes. Location: [#LOC]	$376
5600-0087	Warning light Code 3 65BZA LED (PR) amber. Surface mounted with bezel. Location: [#LOC]	$539
5600-0088	Warning light Code 3 65BZR LED (PR) Red. Surface mounted with bezel. Location: [#LOC]	$539
5600-0089	Warning Light Code3 model #65BZRW split red/clear LED with chrome bezel (PR). Location: [#LOC]	$708
5600-0090	Warning light Federal Signal QL64XF LED (PR) red. Surface mounted with bezel. Location: [#LOC]	$570
5600-0091	Warning light Federal Signal MOD2X LED (PR) amber. Recess mounted. Location: [#LOC]	$723
5600-0092	Opticom Emitter 3M #792HF. Emitter with filter and control only. Wire through parking brake. Location: [#LOC].	$2,847
5600-0093	Whelen beacon with halogen rotator and 700 series scene (PR) Model B6THAZ1P. Dome color: [#COL]. Location [#LOC].	$1,121
5600-0094	Warning light Federal Signal QL64XF LED (PR) amber. Surface mounted with bezel. Location: [#LOC]	$570
5600-0098	Warning light Whelen 600 series Super LED (PR) amber. Location: [#LOC]	$567
5600-0099	Warning light Whelen 600 series Super LED (PR) red. Location: [#LOC].	$567
5600-0100	Warning light Whelen 600 series Super LED (PR) blue with clear lens. Location: [#LOC]	$567
5600-0101	Whelen beacon with halogen rotator and 700 series LED (PR) Model B6TM with amber dome on driver side, red dome officer side and [#COL] LEDs. Location [#LOC].	$1,331
5600-0105	Hazard (door ajar) light 2" LED. Location: [#LOC]	$32
5600-0106	Warning light Roto Ray LED with (2) red and (1) clear lenses. Locate on front of cab center above grille.	$2,612
5600-0111	Warning light Whelen 600 series Super LED (PR) white with clear lens. Location: [#LOC]	$643
5600-0112	Warning light Whelen 600 series LED (PR) blue. Surface mounted. Location: [#LOC]	$843
5600-0116	Warning light Federal Signal MOD2X LED (PR) blue on driver's side, red on officer's. Recess mounted. Location: [#LOC].	$814
5600-0118	Warning light Whelen 500 series TIR6 Super LED (PR) red. Surface mounted 5TSMAC bezel with weatherproof connector. Location: [#LOC]	$479
5600-0124	Warning light Code 3 LXEX1F-R LED (PR) red. Surface mounted with bezel. Location: [#LOC]	$660
5600-0125	Code3 model 780 LED flasher. Flasher will control lower level warning lights ipo multiplexing	$1,549
5600-0128	Warning light Whelen 600 series split Super LED (PR) red/amber. Location: [#LOC]	$736
5600-0129	Warning light Whelen 600 series split Super LED (PR) red/clear. Location: [#LOC]	$792
5600-0130	Whelen model UFM8 LED flasher (PR). Flashers will control lower level warning lights ipo internal flashers. Locate (1) in cab and (1) in body.	$1,047
5600-0131	Light Whelen model PSR00FRR LED (PR) red. Location: [#LOC]	$360
5600-0132	Warning light Federal Signal QL64XF LED (PR). (1) red and (1) green. Location: Red driver and green officer in front quad inboard of NFPA warning light	$761
5600-0133	Warning light Whelen 900 series Super LED model 90RR5FRR (PR) red. Location: [#LOC]	$1,117
5600-0134	Warning light Whelen 600 series LED red/clear. Surface mounted with weatherproof connector(PR). Location: [#LOC]	$738
5600-0136	Federal MicroEscape LED beacon (PR) with [#COL] lenses. Location: [#LOC]. Requires additional upper level warning or Signal Master.	$1,909
5600-0137	Warning light Whelen 700 series Super LED (PR) red/clear. Surface mounted with weatherproof connector. Location: [#LOC]	$746
5600-0138	Warning light Whelen LIN3 series Super LED (PR) red with clear lens. Surface mounted RFLANGCD bezel with weatherproof connector. Location: [#LOC]	$356
5600-0139	Whelen beacon with LED upper beacon and 700 series Super LED (PR) Model B6LED with red LEDs/clear domes and [#COL] LEDs/clear lenses. Location: [#LOC]	$2,694
5600-0140	Warning light circuit wiring through chassis reverse. All warning lights.	$71
5600-0142	Warning light Whelen 900 series Super LED model 90RA5FCR (PR) split red / amber with clear lenses. Location: [#LOC]	$1,117
5600-0143	Warning light Whelen 600 series Super LED (PR) red w/clear lens. Location: [#LOC]	$567
5600-0144	Warning light Whelen 500 series TIR6 Super LED (PR) blue. Surface mounted 5TSMAC bezel with weatherproof connector. Location: [#LOC]	$479
5600-0146	Warning light Whelen 700 series strobe split lens(PR) Red/Amber. Requires power pack or option with spare power pack outlets. Includes weatherproof connectors. Requires engineering approval for NFPA applications. Location(s): [#LOC]	$608
5600-0147	Warning light Whelen 600 series LED (PR). Red driver, blue officer surface mounted with weatherproof connector. Location: [#LOC]	$789
5600-0148	Warning light Federal Signal MOD1F LED (PR) amber. Surface mounted. Location: [#LOC]	$504
5600-0152	Warning light Whelen 500 series LED (PR) green. Includes switch on pump panel labeled "Ready for Water" Location: (1) centered between grille and windshield on slope, (1) driver side inside of beavertail up high below hosebed opposite officer discharge.	$732
5600-0153	Warning light Whelen 600 series split Super LED (PR) red/blue driver, red/amber officer. Location: [#LOC].	$736
5600-0154	Warning light Whelen 600 series Super LED (PR). Red driver, blue officer surface mounted with weatherproof connector. Location: [#LOC].	$567
5600-0155	Warning light Federal Signal MOD1F LED (PR) (1) red driver, (1) blue officer. Surface mounted. Location: [#LOC].	$583
5600-0156	Warning light Federal Signal QL64XF LED (PR) green. Surface mounted with bezel. Location: [#LOC].	$628
5600-0157	Federal Model SY12FS Sentry with green dome. Includes switch on driver overhead. Location: pole mounted center rear cab roof.	$368
5600-0158	Warning light Federal Signal MOD2f LED (PR) amber. Surface mounted. Location: [#LOC]	$838
5600-0159	Warning light Federal Signal MOD3F LED (PR) red/blue/red. Surface mounted. Location: [#LOC]	$1,066
5600-0160	Warning light Federal Signal QL97XF LED (PR) red. Surface mounted with bezel (if applicable). Location: [#LOC]	$821
5600-0161	Warning light Federal Signal QL97XF LED (PR) amber. Surface mounted with bezel (if applicable). Location: [#LOC]	$821
5600-0162	Warning light Federal Signal QL64XF LED (PR) blue. Surface mounted with bezel. Location: [#LOC].	$570

5600-0163	Warning light Federal Signal Model 3300-03 LED w/ bezel (PR). Surfaced mounted with blue lens. Location: [#LOC].	$479
5600-0164	Warning light Federal Signal QL64XF LED (PR) white. Surface mounted with bezel. Location: [#LOC].	$659
5600-0165	Warning light Whelen 500 series Super Linear LED (PR) green. Location: [#LOC].	$505
5600-0166	Warning light Whelen 600 series Super LED (PR) green. Location: [#LOC].	$748
5600-0168	Fed QuadraFlare QL97SC-RA Red/Amber split color LED lights located on rear of body up high. Red on top on left side and bottom on right side to simulate "X" pattern. Includes external flasher.	$1,027
5600-0169	Warning light Whelen 900 series Super LED driver side amber / officer side red model 90AA5FAR / 90RR5FRR. Location: [#LOC]	$1,117
5600-0170	Warning light Federal Signal MOD3F LED (PR) amber. Surface mounted. Location: [#LOC]	$1,066
5600-0171	Warning light Whelen LIN3 series Super LED (PR) amber with clear lens. Surface mounted RFLANGCD bezel with weatherproof connector. Location: [#LOC]	$356
5600-0173	Federal MicroEscape NFPA compliant LED beacon (PR) clear lenses with [#COL] LED reflectors. Location: [#LOC].	$1,424
5600-0175	Warning light Whelen 700 series Super LED (PR) red. Location: [#LOC].	$567
5600-0176	Mars 888 pedistal mounted traffic clearing lights with clear lenses located one each side of cab above outer quad bezel.	$1,779
5600-0177	Whelen model UFM8 LED flasher (3). Flashers will control warning lights ipo internal flashers. Locate (1) in cab and (2) in body.	$1,570
5600-0180	Whelen beacon with LED upper beacon and 700 series Super LED (PR) Model B6LED with red domes and split red/amber LEDs. Location [#LOC].	$2,762
5600-0181	Warning light Federal Signal Model 360501 LED w/ bezel (PR). Surfaced mounted with blue driver and red officer lenses. Location: [#LOC].	$527
5600-0182	Whelen beacon with LED upper beacon and 700 series Super LED (PR) Model B6LED with amber domes and [#COL] LEDs. Location [#LOC]	$2,694
5600-0183	Warning light Whelen 600 series Super LED (PR). blue driver, green officer surface mounted with weatherproof connector. Location: [#LOC].	$658
5600-0184	Warning light Federal Signal QL64XF LED (PR). (1) red driver, (1) blue officer. Surface mounted with bezel. Location: [#LOC]	$570
5600-0185	Federal Model IVP100 Vector pod (PR) located at the rear cab corners. Driver side to be amber with switch on driver's switch panel and automatically turn off when warning lts are on. Officer side to be blue with switch on driver's switch panel.	$725
5600-0186	Warning light Federal Signal Meteor with red lens and S/S pedistal mounted enclosure. Located on front of cab over grill.	$509
5600-0187	Warning light Federal Signal QL97XF LED (PR). (1) red driver, (1) blue officer. Surface mounted with bezel (if applicable). Location: [#LOC].	$821
5600-0189	Federal Intelli model 650205 LED flasher (PR). Flashers will control lower level warning lights ipo internal flashers. Locate (1) in cab and (1) in body.	$830
5600-0190	Warning light Whelen 600 series Super LED (PR). Blue driver, amber officer surface mounted with weatherproof connector. Location: [#LOC].	$567
5600-0191	Whelen beacon with LED upper beacon and 700 series Super LED (PR) Model B6LED with amber driver and red officer domes and [#COL] LEDs. Location [#LOC].	$2,694
5600-0195	Code3 model XP9501NFPA1 (PR) red LED with clear domes. Location: [#LOC].	$1,934
5600-0196	Fed QuadraFlare QL64SC-RC Red/White split color LED lights in ptd smooth plt alum box above the grille. Red on top on left side and bottom on right side to simulate "X" pattern. Wired to lower zone lighting and switched off with parking brake. Includes ex	$1,520
5600-0197	Warning light Whelen 600 series Super LED (PR). red driver, green officer surface mounted with weatherproof connector. Location: [#LOC].	$658
5600-0198	Whelen PE215 emitter. Emitter and control only. Wire through parking brake. Location: [#LOC].	$817
5600-0199	Whelen beacon with LED upper beacon and 700 series Super LED (PR) Model B6LED with red driver and blue officer domes and [#COL] LEDs. Location [#LOC].	$2,694
5600-0200	Whelen beacon with LED upper beacon and 700 series Super LED (PR) Model B6LED with red driver and amber officer domes and [#COL] LEDs. Location [#LOC].	$2,694
5600-0201	Warning light Whelen 900 series Super LED model 90RB5FCR (PR) split red / blue with clear lense. Location: [#LOC].	$1,117
5600-0202	Warning light Weldon Diamonback V46W-C00R LED (PR) red w/ clear lenses. Includes diamond plate mounting box. Location: [#LOC].	$868
5600-0205	Warning light Federal Signal GL1F-B LED (PR) blue. Location: [#LOC].	$539
5600-0213	Whelen beacon with halogen rotator and 700 series LED (PR) Model B6TM with red dome on driver side, amber dome officer side and [#COL] LEDs. Location [#LOC].	$1,331
5600-0215	Power Arc (PR) Model LED210 yellow with clear lenses. Location: [#LOC].	$1,179
5600-0216	Warning light Whelen M9 series Linear Super LED (PR) red. Location: [#LOC].	$1,287
5600-0217	Power Arc (PR) Model LED210 red with clear lenses. Location: [#LOC].	$1,179
5600-0221	Warning light Whelen LIN3 series Super LED (4) red with clear lens. Surface mounted RFLANGCD bezel with weatherproof connector. Location: 2 each side of ford logo on the front grill above and below center brush gaurd bar.	$712
6000	**Aerial**	
6100-0005	Ladder HP75 with waterway. Includes left side console with cover, split steps at tip and jack leg flood lights.	$178,070
6100-0008	Platform HP95 Mid-Mount. Includes driver side roll top console, level assist and jack leg flood lights.	$367,691
6100-0016	Ladder HP100 tiller. Includes pinned waterway, console cover, split steps at tip and jack leg flood lights. Hydraulic reservoir on tractor chassis to have access panel on front of reservoir to service suction strainer.	$394,492
6100-0018	Platform HP100 with SideStacker T/T. Includes left side roll top console, turntable mansaver bars and jack leg flood lights.	$349,646
6100-0019	Platform HP100 with full turntable. Includes left side roll top console, turntable mansaver bars and jack leg flood lights.	$349,646

6100-0026	Raise aerial turntable pedestal and boom support 1" (Required on 260" wheelbase HP100 Platform and 250" wheel base long cab HP100 NPNT Platform).	$2,638
6100-0027	Ladder HP78 500 lb tip load with waterway. Includes left side console with cover, split steps at tip and jack leg flood lights.	$180,240
6100-0028	Ladder HP78 750 lb tip load with waterway. Includes left side console with cover, split steps at tip and jack leg flood lights.	$180,240
6150-0000	Cold weather package for aerial hydraulic system.	$2,481
6150-0001	Aerial hydraulic filter isolation kit.	$349
6150-0003	Gauge aerial hydraulic oil level. Electronic display to be located [#LOC].	$537
6150-0004	Extended length outrigger foot (PR). Required with 33k rear axle.	$328
6300-0001	Monitor Elkhart electric 1000GPM for ladder. Includes tip and base controls.	$10,689
6300-0002	Monitor Akron electric 1000GPM for ladder. Includes tip and base controls.	$10,591
6300-0004	Monitor Elkhart electric 1250GPM. Includes tip controls, base controls and a butterfly valve.	$10,591
6300-0007	Monitor Akron electric 1250GPM for platform. Includes tip controls, base controls and butterfly valve.	$10,739
6300-0009	Monitor Elkhart dual for platform. Rated at 1250 GPM on the 92 Pltfrm and 1500 GPM on the HP95MM and HP100 Pltfrm. Includes (1) electric and (1) manual monitor, (2) butterfly valves and tip/base controls for the electric monitor. Monitor sweep is 67.5 deg	$16,079
6300-0010	Monitor Akron dual for platform. Rated at 1250 GPM on the 92 Pltfrm and 1500 GPM on the HP95MM and HP100 Pltfrm. Includes (1) electric and (1) manual monitor, (2) butterfly valves and tip/base controls for the electric monitor. Monitor sweep is 67.5 degre	$16,444
6300-0011	1000 GPM Akron electric monitor for Tiller ladder. Includes auto-stow, tip and base controls.	$11,804
6300-0014	Monitor TFT electric 1250GPM with powder coated silver finish. Includes tip controls, base controls and a butterfly valve.	$12,837
6300-0015	Monitor TFT dual for platform with powder coated silver finish. Rated at 1250 GPM on the 92 Pltfrm and 1500 GPM on the HP95MM and HP100 Pltfrm. Includes (1) electric and (1) manual monitor, (2) butterfly valves and tip/base controls for the electric monit	$17,154
6300-0016	Monitor TFT electric 1000GPM for ladder with a powder coated silver finish. Includes tip and base controls.	$10,591
6300-0018	Monitor painted job color.	$385
6300-0020	Monitor Akron electric 1250GPM with SabreMaster nozzle. Includes tip controls, base controls and a butterfly valve.	$11,715
6300-0025	Monitor Elkhart Scorpion RF 1000GPM for ladder. Includes (1) handheld control, OEM transmitter with tip and base controls.	$13,542
6300-0029	Monitor painted two-tone job color.	$385
6300-0030	Monitor Akron dual for platform. Rated at 1250 GPM on the 92 Pltfrm and 1500 GPM on the HP95MM and HP100 Pltfrm. Includes (1) electric with SabreMaster nozzle and (1) manual monitor, (2) butterfly valves and tip/base controls for the electric monitor. Mon	$17,419
6300-0031	Monitor Akron 3578 electric 1000GPM for ladder. Includes 2499 stack tips, 3485 steam shaper and base controls.	$10,269
6300-0032	Monitor Akron electric 1000GPM with SabreMaster nozzle for ladder. Includes tip and base controls.	$11,686
6300-0033	Monitor Akron electric 1500GPM. Side sweep limited to 45 degrees. Up sweep limited to 30 degrees. Includes tip controls, base controls and a butterfly valve.	$11,296
6300-0034	Monitor Akron electric 1250GPM. Includes 3499 stack tips, 3485 steam shaper, tip controls, base controls and a butterfly valve.	$10,080
6350-0000	Pinned waterway - upgrade. Waterway pins to section 2 or 3 on HP75 / HP78 and pins to section 3 or 4 on HM100 and CR100.	$6,839
6350-0001	Nozzle Guard.	$712
6350-0002	Elkhart 2.5" valve for platform. Valve to be located at the [#LOC].	$1,388
6350-0005	Rear 4" NST waterway inlet for rear mounted aerials. Includes chrome cap.	$942
6350-0006	2.5" Waterway pressure gauge. Locate next to waterway inlet.	$181
6350-0007	3.5" Waterway pressure gauge. Locate next to waterway inlet.	$204
6350-0008	Waterway shut-off valve. Mounted to allow waterway inlet to be used as a discharge. (Available on 1000 GPM waterway only - N/A with Waterous pumps on 4-jack aerials)	$1,255
6350-0009	Right side 4" NST waterway inlet for Mid-Mount Boom or Platform. Includes chrome cap.	$1,374
6350-0010	Flowminder with single readout and totalizer for the aerial waterway to be located at the aerial control station.	$2,297
6350-0012	Akron 2.5" valve for platform. Valve to be located at the [#LOC].	$1,530
6350-0014	2.5" chrome elbow with 2.5" x 1.5" reducer and 1.5" cap for platform discharge valve.	$252
6350-0015	Dual 4" NST waterway inlets for Mid-Mount Platform. Includes chrome caps.	$2,485
6350-0016	Dual 4" NST waterway inlets located (1) each side on trailer gooseneck. Includes chrome 4" caps. Also includes (2) 1.5" drain valves. To be hard piped down low on front corners of trailer body and terminated with a 1.5" MNST adaptor and cap. Outlet to poi	$2,883
6350-0017	4" Waterway inlet valve (PR). Includes 4" Akron ball valves w/handwheel controls and 4" FNST x 5" Storz droop elbows. Locate (1) each side on waterway inlet. Handwheel to be positioned above valve facing forward.	$6,894
6350-0019	2.5" Waterway pressure gauge. Locate next to waterway inlet.	$181
6350-0020	Dual read 2.5" waterway pressure gauge (30-0-600 psi/100-0-4140 KPA). Locate next to waterway Inlet.	$181
6350-0021	Dual read 3.5" waterway pressure gauge (30-0-600 psi/100-0-4140 KPA). Locate next to waterway Inlet.	$243
6350-0024	3.5" Waterway pressure gauge. Locate next to waterway inlet.	$204
6350-0025	2.5" Noshok Waterway pressure gauge. Locate next to waterway inlet.	$193
6350-0026	2.5" Stainless steel RedHead 45 degree elbow with 2.5" x 1.5" chrome brass reducer and 1.5" chrome brass cap for platform discharge valve.	$413
6350-0027	Auxiliary waterway inlet isolation valve - 4" handwheel controlled Akron. Mounted to allow aux inlet to be connected while flowing waterway from on-board pump.Includes relief valve and bleeder outboard of 4" valve.	$3,602

6350-0028	4" Waterway inlet valve (PR). Includes 4" Akron ball valves w/handwheel controls and 4" FNST x 4" Storz droop elbows. Locate (1) each side on waterway inlet. Handwheel to be positioned above valve facing forward.	$6,750
6350-0029	Rear 4" NST waterway inlet (PR) for rear mounted aerials. Includes 4" Akron handwheel controled shut-off vlvs, relief vlvs and chrome caps. Available only on CR100/92RM and HP100 Platform WOP, inlet replaces small compts at lower rear of body.	$9,459
6350-0031	Auxiliary waterway inlet isolation valve - 4" electric controlled Akron. Mounted to allow aux inlet to be connected while flowing waterway from on-board pump. Includes relief valve and bleeder outboard of 4" valve.	$3,998
6350-0033	Waterway inlet shut-off valve - 4" electric controlled Akron. Mounted below ladder tunnel between torque box and rear of body. Includes relief valve and bleeder outboard of 4" valve. Note: Std aerial relief valve to be located ahead of 4" valve.	$3,998
6350-0034	3.5" Waterway pressure gauge 0 to 300. Locate next to waterway inlet.	$204
6350-0035	2.5" Pressure Gauge (30-0-400). Waterway, Color: [#COL]	$220
6350-0036	3.5" Waterway pressure gauge Ashcroft Gauge. Locate next to waterway inlet.	$204
6350-0037	2.5" Waterway pressure gauge 0 to 300. Locate next to waterway inlet.	$181
6400-0000	Breathing air platform with (2) 300CF cylinders. Includes low air alarm.	$8,190
6400-0001	Breathing air platform with (2) 444CF cylinders. Includes low air alarm.	$9,245
6400-0002	Breathing air platform with (2) 509CF cylinders. Includes low air alarm.	$11,539
6400-0003	Breathing air platform with (1) 444CF cylinder. Includes low air alarm.	$6,934
6400-0004	Breathing air ladder with (1) 300CF cylinder. Includes low air alarm.	$7,972
6400-0006	Breathing air ladder with (1) 444CF cylinder. Includes low air alarm.	$8,083
6400-0007	Fill hose 50' 2250 PSI for 300CF cylinders.	$790
6400-0008	Fill hose 50' 5000 PSI for 444CF cylinders.	$920
6400-0009	Fill hose 50' 10,000 PSI for 509CF cylinders.	$1,129
6400-0010	Additional breathing air outlet at turntable console. Includes filter.	$607
6400-0011	Breathing air outlets additional in platform (PR).	$225
6400-0013	Breathing air platform with (1) 509CF cylinder. Includes low air alarm.	$8,620
6500-0000	Hose box for 50' of 1.75" DJ hose located [#LOC].	$579
6500-0001	Hose box for 50' of 2.5" DJ hose [#LOC].	$584
6500-0011	Pike pole tube for 6' pole on ladder. Location: [#LOC].	$242
6500-0012	Pike pole tube for 8' pole on ladder. Location: [#LOC].	$242
6500-0013	Pike pole tube for 10' pole on ladder. Location: [#LOC].	$242
6500-0014	Pike pole tube for 12' pole on ladder. Location: [#LOC].	$242
6500-0015	Mansaver safety bars mounted at turntable (PR).	$1,626
6500-0016	Lifting eyes on platform (PR). Not available on Bronto.	$293
6500-0017	Lifting arm for Mid-Mount platform.	$545
6500-0018	Stokes basket receiver for use with Ferno Washington Model 71 Stokes on 95 RM platforms. Stokes not included.	$1,123
6500-0019	Axe bracket mounted on aerial. Location: [#LOC]	$405
6500-0020	Stokes basket receiver for use with Ferno Washington Model 71 Stokes on 95 MM platforms. Stokes not included.	$1,358
6500-0023	Dual rope roller for aerial.	$2,275
6500-0024	Lifting eye at tip of ladder.	$401
6500-0025	Rear handrail extension (PR) on turntable for center access step on rear of the body. HP75 / HP78 center hosebed only.	$279
6500-0026	Stokes basket receiver for use with Ferno Washington Model 71 Stokes on HP100 platform. Includes brackets to mount stokes to base section right side ahead of sign plate (if equipped). Stokes not included.	$1,954
6500-0027	Lifting eye / tie-off package for HP100 Platform. Includes lifting eyes each side at tip of base and a tie-off point on each turntable trunnion.	$1,837
6500-0028	Rappelling rope guides located each side on front handrail of platform. HP100 Platform only.	$229
6500-0030	Hard suction storage box (PR) with nylon straps. (1) each side of ladder base section. Outer wall to be used as sign plate. Color: [#COL]	$1,773
6500-0031	Hose box for 10' of 1.75" DJ hose located [#LOC].	$551
6500-0032	Vogel auto lube system for aerial device (up to 8 points). Includes Dia Plt cover w/slot to view grease level.	$2,492
6500-0033	Mansaver safety bars w/o padded cover mounted at turntable (PR).	$1,684
6500-0037	Storage box with hinged lid & butterfly latch for miscellaneous items, rated for 10lb. capacity. Approx size: 8W x 8L x 20D. Box location: [#LOC].	$405
6500-0038	Stokes basket mounting bracket outside base section. Location: left side ahead of sign plate.	$743
6500-0039	Equipment mounting plate 6" W x height of ladder section. Loc: Outboard on right side of fly approx 11" from tip. Permanent mounted equipment not to exceed 5 lbs.	$402
6500-0040	Hose box for 100' of 1.75" DJ hose located [#LOC].	$618
6500-0041	Diamond plate storage box with hinged lid for chain saw. Saw to store with blade extended thru dealer supplied slot in sub floor. Located on officer side of aerial turntable.	$674
6500-0042	Stokes basket mounting bracket outside base section. Location: right side rear of sign plate.	$743
6500-0043	Retaining pin for pike pole storage tube. Pin to prevent pike pole form vibrating out of stored position on ladder section.	$136
6500-0046	Mask box in platform for two masks. Box is in addition to box supplied with breathing air system.	$390
6500-0051	Stokes basket mounting bracket outside base section. Location: right side ahead of sign plate.	$743
6500-0052	Stokes basket mounting bracket outside base section. Location: left side rear of sign plate.	$743
6500-0053	Hose box for 25' of 1.75" DJ hose located [#LOC].	$557
6550-0001	Outrigger warning lights (PR) LED. Trucklite Model 91R	$304
6550-0003	Whelen 700 Series [#COL] strobe lights on platform (PR). The lights shall be switched with aerial master and located one each side on the [#LOC].	$968
6550-0004	Whelen strobe lights at ladder tip (PR) with [#COL] lenses. Switched with aerial master.	$976

6550-0008	Federal MOD1X [#COL] LED warning lights on platform (PR). The lights shall be switched with aerial master and located one each side on [#LOC].	$535
6550-0009	Whelen 700 Series [#COL] LED lights on platform (PR). The lights shall be switched with aerial master and located one each side on [#LOC].	$642
6550-0010	Outrigger warning lights (PR). Trucklite Model 60015R.	$103
6550-0011	Outrigger warning lights (PR). Weldon Model 1010.	$103
6550-0013	Federal QL64XF LED red warning lights (4). Located down low across front of platform wired to upper level warning lights.	$1,193
6550-0014	Whelen 600 Super LED red warning lights (4). Located down low across front of platform wired to upper level lights.	$1,296
6550-0015	Code3 65R LED red warning lights (4). Located down low across front of platform, wired to the upper level warning lights.	$1,302
6550-0016	Federal QL64XF [#COL] LED warning lights on platform (PR). The lights shall be switched with aerial master and located one each side on [#LOC].	$558
6550-0017	Whelen 600 Super LED [#COL] LED warning lights on platform (PR). The lights shall be switched with aerial master and located one each side on [#LOC].	$608
6550-0018	Code 3 65 [#COL] LED warning lights on platform (PR). The lights shall be switched with aerial master and located one each side on [#LOC].	$574
6550-0019	Outrigger warning lights (PR) LED. Whelen 600 Super LED.	$567
6550-0020	Whelen 500 Series TIR6 Super-LED lights at ladder tip (PR) with red lenses. Switched with aerial master.	$765
6550-0022	LED warning lights on the sides of the platform to be switched with either upper level warning or aerial master warning.	$202
6550-0023	Federal IMPAXX model IPX 302 [#COL] LED lights (4) with clear lenses at ladder tip. Lights located (2) each side, (1) side facing and (1) forward facing. Lights to be synchronized together and switched with aerial master.	$1,093
6550-0026	Whelen 600 Super LED red and blue warning lights (4). Located down low across front of platform alternating red/blue wired to upper level lights.	$1,296
6560-0001	Ladder climbing lights. Lens colors shall be [#COL].	$2,439
6560-0002	Spot light 12V located [#LOC].	$402
6560-0003	Flood light 12V located [#LOC].	$402
6560-0004	Collins light FX-12 located [#LOC].	$520
6560-0005	Flood lights Unity at base (PR).	$471
6560-0006	Collins light at base (PR).	$1,140
6560-0008	Quartz light 500W with pole platform. Hardwired. Requires 110V twist lock at tip option. The light shall be located [#LOC].	$621
6560-0009	Quartz light 500W at tip. Hardwired. Requires 110V twist lock at tip option. The light shall be located [#LOC].	$330
6560-0011	Quartz light 750W Magnafire with pole model KR236-S mounted at platform. Requires 110V twist lock receptacle at tip option. The light shall be located [#LOC].	$1,282
6560-0012	Quartz light 750W Magnafire model KR636-S. Requires 110-volt twist lock receptacle at tip option. The light shall be located [#LOC].	$1,028
6560-0013	Quartz light 750W Magnafire permanently mounted recessed in the center of the bottom heat shield on the platform. Requires 110 receptacle at tip option. Includes hardwired switch on platform console. Midmount only.	$841
6560-0014	Quartz light 750W Magnafire (PR) permanently mounted recessed in the front corners of the bottom heat shield on the platform. Requires 110 receptacle at tip option. Includes hardwired switch on platform console. Midmount only.	$1,683
6560-0016	Quartz light Fire Research Focus 750W/110V model FCA540-S75-CLP37-ON-SW with 37" pull up pole. The light shall be located [#LOC].	$1,475
6560-0017	Quartz light Fire Research Focus 750W/110V model FCA300-S75 with aerial mount. The light shall be located [#LOC].	$955
6560-0018	Quartz light Fire Research Focus 750W/110V model FCA570-S75-ON without pole. The light shall be located [#LOC].	$1,130
6560-0019	Quartz light Fire Research Optimum 750W/110V model OPA570-S75-ON without pole. The light shall be located [#LOC].	$1,196
6560-0026	Quartz light Fire Research Optimum 750W/110V model OPA540-S75-CLP37-ON-SW with 37" pull up pole. The light shall be located [#LOC].	$1,536
6560-0028	Grille guard for Magnafire light(s) on aerial.	$142
6560-0029	Ladder climbing lights TruckLite LED. Lens colors shall be [#COL].	$2,739
6560-0030	Grille guard for Optimum light(s) on aerial.	$138
6560-0031	Quartz light 750W Magnafire 5000 model KR656-S. Requires 110-volt twist lock receptacle at tip option. The light shall be located [#LOC].	$1,028
6560-0033	Quartz light Fire Research Focus 750W/110V model FCA200-S75 (PR) permanently mounted recessed in the front corners of the bottom heat shield on the platform. Requires 110 receptacle at tip option. Includes hardwired switch on platform console. Midmount on	$1,910
6560-0034	Three way switching for quartz light on front of platform to allow light to be controlled from platform console, turntable console or cab. Includes 12v/110v relay and switches at platform and base consoles. Requires add'l 12v switch option in cab.	$666
6560-0036	Quartz light MagnaFire 70W/12V model KR-1331-S low profile permanent mount with angle bracket. Includes switch on light. Location(s): [#LOC].	$1,395
6560-0037	Collins light FX-6 located [#LOC]. No switch at lighthead.	$520
6560-0038	Additional turntable lights (PR). Locate (1) each side ahead of aerial controls. HP100 platform only.	$98
6560-0039	Additional floor strip light in platform (EA). Location: [#LOC].	$102
6570-0003	110V/15A twist lock receptacle at tip.	$2,603
6570-0008	Intercom aerial 2-way. Atkinson Dynamics (Federal). Speaker to be located to rear of platform on Bronto units.	$1,453
6570-0009	Intercom aerial 3-way. Atkinson Dynamics (Federal). Speaker to be located to rear of platform on Bronto units.	$2,914
6570-0010	Aerial Information System (AIS) for ladder.	$7,110
6570-0011	Aerial Information System (AIS) for ladder. Includes engine information.	$7,910

6570-0012	Aerial Information System (AIS) for platform.	$9,288
6570-0013	Aerial Information System (AIS) for platform. Includes engine information.	$10,430
6570-0014	Class1 aerial information center.	$3,479
6570-0015	110V/20A twist lock receptacle at tip.	$2,603
6570-0017	Duplex receptacle at tip with (1) 3-prong NEMA 5-15 and (1) twist lock NEMA L5-15 receptacle.	$2,647
6570-0018	Extension alarm for aerial. Alarm to sound at turntable console when aerial is near full extension.	$520
6570-0019	Platform floor lights additional (4). Lights to match standard floor lights.	$221
6570-0021	Duplex receptacle at tip with 3-prong NEMA 5-15 outlets.	$2,647
6570-0022	Air horn switch at aerial turntable control console. Switch to be labeled "Air Horn".	$127
6570-0023	Firepower receptacle at tip.	$2,634
6570-0024	Laser jack pad spotting lights (4).	$4,289
6570-0026	Laser jack pad spotting lights (2).	$2,359
6570-0027	(Obsolete - N/A from supplier) Pinned waterway cable reel to be job color (Painting to be done by supplier).	$1,495
6570-0028	Air horn switch at aerial turntable control console. Switch to be a red button type and be labeled "Air Horn".	$127
6570-0030	110V/20A duplex household receptacle at tip.	$2,603
6600-0000	Folding ladder bracket. Locate inside the right side fly section for a FL-10.	$549
6600-0002	Roof ladder bracket J style mount. Locate outside base section for a [#LOC]. Available on HP75/78, HP100, and HP95.	$1,721
6600-0003	Roof ladder bracket lift out. Locate inside the left side fly section for a PRL-12. Avail on 95RM and 95MM.	$314
6600-0005	Roof ladder bracket lift out. Locate inside the left side fly section for a PRL-14. Avail on 95RM and 95MM.	$314
6600-0006	Roof ladder bracket lift out. Locate inside the left side fly section for a PRL-16. Avail on 95RM, HP95MM and HP100P.	$314
6600-0008	Roof ladder bracket lift out. Locate inside the left side fly section for a 775A-12. Avail on HP100P, 95RM and 95MM.	$314
6600-0009	Parapet roof ladder bracket for platform. For use with Alcolite and Duo Safety roof ladders (not included). Available on HP100 Pltfrm only.	$1,732
6750-0000	Aerial sign plates 10 x 144 (PR). Available on Booms, HP75 and HP100 only. Does not include lettering. Color: [#COL]	$1,414
6750-0001	Aerial sign plates 16 x 144 (PR). Available on HP95 only. Does not include lettering. Color: [#COL]	$1,336
6750-0004	Aerial sign plates 12 x 144 (PR). Available on HP78, HP100 and HP100 platform only. Does not include lettering. Color: [#COL]	$1,471
6750-0007	Sign plate for rear of aerial turntable handrails. To be two piece painted smooth aluminum plate split in the center and hinged on each side. Does not include lettering. Color: [#COL]	$744
6850-0002	Pump panel control station. HP75 / HP78 and 50' rear mount boom.	$3,343
6850-0003	Ladder tip controls.	$9,870
6850-0004	Short Jack System HP75 / HP78.	$7,833
6850-0005	Lock for ladder controls. 50/HP75/HM100/HP100/CR100/110 only.	$249
6850-0006	Additional handheld jack controller at rear of body. Locate in rear jack control box. Includes selector switch at aerial master panel.	$2,159
6850-0008	Platform leveling system to allow adjustment of platform pivot angle from cab. Includes light on back of platform visable by driver to indicate platform is in alignment with ladder.	$2,281
6850-0009	Hinged cover for platform control console. Diamond plate with rubber hood latch to hold closed.	$398
6850-0010	Connector for handheld jack control at rear of body. Loc: [#LOC]	$483
6850-0011	Gas spring for aerial ladder console cover. To hold cover open at 90 degrees to the side.	$157
6850-0012	Hinged cover for platform control console. Swirl finish smooth plate with gas spring hold-open.	$496
6850-0016	Doors for aerial switch panels at rear of body. Finish to match rear of body.	$438
6850-0017	Envelope controls HP100 Platform. Forward extention of aerial to be restricted due to 260" wheelbase.	$10,761
6900-0000	Aerial flow test - 3rd party.	$419
6900-0002	Aerial 2009 NFPA Certification.	$3,380
8000	**Paint & Lettering**	
8100-0001	Paint end of fly section high visibility orange. Includes nozzle guard (if equipped).	$428
8100-0065	Paint chassis frame rails, springs, crossmembers, water pump, driveline, fuel and air tanks, and axles shall be painted job color.	$1,757
8100-0070	Paint Valve Ends Job Color	$447
8100-0071	Undercoating E-One	$272
8100-0072	Touch up paint, (1) pint. Dupont paint job color.	$85
8100-0084	All applicable pump/pre-connect application modules are to have a job color finish. Includes upper and lower pump modules, crosswalk module and/or speedlay/pre-connect module (as applicable). Rear mounted body/pump module to be painted job color.	$570
8100-0085	Paint end of fly section job color.	$428
8100-0095	(Obsolete)Touch up paint, (1) quart for each color. Dupont paint job colors.	$331
8100-0097	Paint the pump job color	$545
8100-0100	Special paint break. See sketch / drawing / photo in sales file.	$179
8100-0108	Front wheels to be painted on the inboard side (same color as outboard side).	$294
8100-0109	Rear wheels (4) to be painted on the inboard side (same color as outboard side). Includes outboard side of the inboard wheels.	$586
8100-0115	Paint valve ends 767681EG Black.	$447
8100-0117	Paint cab/body with approved metallic flake paint color.	$2,585
8100-0165	Paint lift cylinders, extension cylinders and upper turntable two-tone (if applicable) job color.	$504
8100-0166	Painted stripe - 12" wide and straight on front, sides and rear of cab and body. Color: [#COL]. Location: [#LOC].	$4,209
8100-0169	Painted stripe - 4" wide hockey stripe, straight across front and may contour as it transitions from Cab to Body on each side. Color: [#COL]. Location: [#LOC].	$4,209
8100-0170	Painted Stripe - 6" wide with "Z". Stripe straight on front, sides and rear of cab and body. "Z" location to be specified by customer. Color: [#COL]. Location: [#LOC].	$4,209

8100-0172	Paint body two tone color. Paint break will be just above door drip rail. DuPont paint. Color: [#COL].	$1,813
8100-0174	Painted stripe - 12" wide hockey stripe, straight across front and may contour as it transitions from Cab to Body on each side. Color: [#COL]. Location: [#LOC].	$5,260
8100-0176	Paint E-One chassis cab - Sikkens paint. Color: [#COL].	$5,235
8100-0177	Cab paint Sikkens two-tone. Upper area of cab to be painted [#COL].	$1,178
8100-0181	Paint body two tone color - Sikkens paint: Color: [#COL].	$1,813
8100-0183	Paint Body - Large - For Aerials, T/A Tankers, Rear Mounts and Rescues. Sikkens paint. Color: [#COL].	$3,989
8100-0188	Durabak coating for all cab and body handrails.	$1,339
8100-0225	Paint the pump. Color: [#COL].	$545
8100-0226	Medical cabinet exterior roll-up door two-tone paint adjustment (EA). Includes dis-assembly/re-assembly of existing two-tone roll-up door to match cab paint break.	$434
8150-0008	Zolatone for Removable Toolboard.	$70
8200-0000	Scotchlite Letter (Each) - 3". Color [#COL].	$16
8200-0001	Scotchlite Letter (Each) - 6". Color [#COL].	$27
8200-0002	Scotchlite Letter (Each) - 9". Color [#COL].	$36
8200-0003	Scotchlite Letter (Each) - 12". Color [#COL].	$37
8200-0004	Scotchlite Letter (Each) - 15". Color [#COL].	$43
8200-0005	Scotchlite Letter (Each) - 18". Color [#COL].	$45
8200-0006	Maltese Cross 12" (Pair)	$1,055
8200-0007	Sign Gold Letter (Each) - 3"	$18
8200-0008	Sign Gold Letter (Each) - 6"	$29
8200-0009	Sign Gold Letter (Each) - 9"	$41
8200-0010	Sign Gold Letter (Each) - 12"	$51
8200-0011	Scotchlite Letters (60) - 3". Color [#COL].	$711
8200-0012	Sign Gold Letters (60) - 3"	$1,035
8200-0014	Sign "Stay Back 500FT" with black reflective lettering. Locate below rear of body.	$123
8200-0015	White Reflective Tape on 2 Outriggers	$202
8200-0018	Scotchlite Letters (90) - 3". Color [#COL].	$888
8200-0019	Scotchlite Letters (120) - 3". Color [#COL].	$1,064
8200-0020	Sign Gold Letters (90) - 3".	$1,377
8200-0021	Sign Gold Letters (120) - 3".	$1,717
8200-0022	Shade and outline for lettering.	$81
8200-0024	Reflexite Letter (Each) - 18". [#COL] Reflexite letter(s) stitched to vinyl hosebed cover end flap.	$60
8200-0026	Die cut letter in stripe (EA).	$22
8200-0027	Scotchlite Letter (Each) - 5". Color [#COL].	$24
8200-0028	Sign Gold Letter (Each) - 5"	$26
8200-0029	Scotchlite Letter (Each) - 10". Color [#COL].	$41
8200-0030	Sign Gold Letter (Each) - 10"	$44
8200-0031	Scotchlite Letter (Each) - 30". Color [#COL].	$85
8200-0036	Scotchlite Letter (Each) - 4". Color [#COL].	$19
8200-0038	Reflexite Letter (Each) - 12". [#COL] Reflexite letter(s) stitched to vinyl hosebed cover end flap.	$47
8200-0039	Maltese Cross SignGold up to 18'' dia (PR) with new layout.	$952
8200-0040	Gold leaf letters (90) - 3".	$3,441
8200-0041	O.W.L. lettering and striping tower package. See photos on file for custom package details.	$8,522
8200-0045	Gold leaf letters (120) - 3".	$4,004
8200-0046	Scotchlite Letter (Each) - 27". Color [#COL].	$71
8200-0047	Sign Gold Letter (Each) - 4"	$22
8300-0002	NFPA Scotchlite Stripe - 4" wide and straight on front, sides and rear of cab and body. Color: [#COL]. Location: [#LOC].	$856
8300-0003	NFPA Scotchlite Stripe - 6" wide and straight on front, sides and rear of cab and body. Color: [#COL]. Location: [#LOC].	$893
8300-0006	NFPA Scotchlite Stripe - 6" wide with "Z". Stripe straight on front, sides and rear of cab and body. "Z" location to be specified by customer. Color: [#COL]. Location: [#LOC].	$1,491
8300-0008	NFPA Scotchlite Stripe - 5" wide with "S". Stripe straight on front, sides and rear of cab and body. "S" location to be specified by customer. Color: [#COL]. Location: [#LOC].	$2,197
8300-0009	NFPA Scotchlite Stripe - 5" wide with double "S". Stripe straight on front, sides and rear of cab and body. Double "S" locations to be specified by customer. Color: [#COL]. Location: [#LOC].	$3,532
8300-0011	Scotchlite stripe (PR) 1/2" located 1/2" above and below existing stripe. Color: [#COL].	$505
8300-0012	Scotchlite stripes (4) 1/2" located (2) above and (2) below existing stripe. Stripes to be spaced 1/2" apart. Color: [#COL].	$1,005
8300-0013	NFPA Scotchlite Stripe - 2" and 4" wide with "Z". Stripe straight on front, sides and rear of cab and body. "Z" location to be specified by customer. 2" above 4" with 1" gap between stripes. Color: [#COL]. Location: [#LOC].	$2,207
8300-0016	Paint Break Sign Gold Chassis Stripe - 3/4" Wide - Black, Gold, Black. To be located above existing paint break.	$352
8300-0017	Paint Break Sign Gold Body Stripe - 3/4" Wide - Black, Gold, Black. To be located above existing paint break.	$552
8300-0018	Sign gold scroll for body door with shade (Ea). Location: [#LOC]	$165
8300-0019	Sign gold scroll for body door (Ea). Location: [#LOC]	$52
8300-0024	Red/White rubrail scotchlite insert.	$195
8300-0025	1/4" Pinstripe above and below existing Scotchlite stripe. Color: [#COL].	$810
8300-0026	Scotchlite stripe 1" located 1" above and below existing stripe. Color: [#COL].	$605
8300-0027	NFPA Scotchlite 4" wide hockey stripe, straight across front and may contour as it transitions from Cab to Body on each side. Color: [#COL]. Location: [#LOC].	$1,398

8300-0028	NFPA Scotchlite 6" wide hockey stripe, straight across front and may contour as it transitions from Cab to Body on each side. Color: [#COL]. Location: [#LOC].	$1,491
8300-0032	Chevron "A" style 4" Scotchlite striping on rear of body. Includes rear facing extrusions, panels and doors inboard/outboard of the beavertails(if applicable). Colors to be [#COL].	$3,213
8300-0033	NFPA Scotchlite Stripe - 8" wide and straight on front, sides and rear of cab and body. Color: [#COL]. Location: [#LOC].	$930
8300-0034	Scotchlite stripe 2" located 1" above existing stripe. Color: [#COL].	$756
8300-0037	Chevron "V" style 4" Scotchlite striping on rear of body. Includes rear facing extrusions, panels and doors inboard/outboard of the beavertails(if applicable). Colors to be [#COL].	$3,213
8300-0038	Scotchlite stripe 2" located 1" above and below existing stripe. Color: [#COL].	$705
8300-0039	Scotchlite stripe 1" located .5" above and below existing stripe. Color: [#COL].	$605
8300-0043	NFPA Scotchlite double 2" wide hockey with 1" between stripes, straight across front and may contour as it transitions from Cab to Body on each side. Color: [#COL]. Location: [#LOC].	$2,207
8300-0044	Scotchlite stripe 1" located 1" above existing stripe. Color: [#COL].	$303
8300-0045	1/4" pinstripe. Color: [#COL]. Location: At cab paint break	$177
8300-0046	Scotchlite stripe (PR) 1/2" located directly above and below existing stripe. Color: [#COL].	$505
8300-0048	Paint break scotchlite chassis stripe - 3/4" Wide - Black, [#COL], Black. To be located above existing paint break.	$617
8300-0050	Scotchlite stripe (PR) 1" located directly above and below existing stripe on satin roll-up doors only. Color: [#COL].	$505
8300-0052	Chevron "V" style Scotchlite striping on rear of body outboard of beavertails (if equipped). Colors to be [#COL].	$952
8300-0054	[#COL] 3/4" razor blade stripe for sign plates	$522
8300-0056	Chevron "A" style 4" individual Scotchlite striping on front bumper. Colors to be [#COL].	$1,327
8300-0057	Arched stripe 6"/2" on front cab door and blend into a straight body stripe. Includes stripe on front bumper. Color: [#COL]	$2,207
8300-0058	Chevron "V" style 4" Scotchlite striping on rear B1 compt door, (3) stripes. Colors to be red/white/black pinstripe.	$832
8300-0059	NFPA Scotchlite Stripe - 10" wide and straight on front, sides and rear of cab and body. Color: [#COL]. Location: [#LOC].	$1,611
8300-0060	Scotchlite Stripe - 5" wide straight on front front of cab below windshield end at radius corners. Color: [#COL].	$225
8300-0061	Chevron "A" style 6" individual Scotchlite striping on rear of body. Includes rear facing extrusions, panels and doors inboard/outboard of the beavertails(if applicable). Colors to be [#COL].	$3,213
8300-0062	Chevron "A" style Scotchlite striping on rear of body outboard of beavertails (if equipped). Colors to be [#COL].	$952
8300-0063	Scotchlite Stripe - Quest Demo. Includes large "Quest" letters that are arched to match cab window line with triple stripe along body. Includes straight stripe on front and rear of apparatus for NFPA compliance. Color: [#COL].	$2,304
8300-0065	Paint break scotchlite chassis stripe - 3/4" Wide - White, [#COL], White. To be located above existing paint break.	$617
8300-0066	NFPA Scotchlite Stripe - 4" wide with "Z". Stripe straight on front, sides and rear of cab and body. "Z" location to be specified by customer. Color: [#COL]. Location: [#LOC].	$1,398
8300-0067	Chevron "A" style 4" Scotchlite striping on rear of body outside of beavertails. Colors to be [#COL].	$1,327
8300-0069	6" [#COL] scotchlite stripe around perimeter of plaform. Includes 1/2" black trim on top and bottom of stripe.	$471
8300-0070	Chevron "A" style 4" Scotchlite striping on rear of body between beavertails. Colors to be [#COL].	$1,828
8300-0071	Paint break scotchlite chassis stripe - 3/4" Wide - [#COL]. To be located above existing paint break.	$617
8300-0072	NFPA Scotchlite Stripe - 10" wide with "Z". Stripe straight on front, sides and rear of cab and body. "Z" location to be specified by customer. Color: [#COL]. Location: [#LOC].	$1,858
8300-0076	Chevron "A" style 4" Scotchlite striping on rear of body between beavertails; body panels and extrusions only (No doors). Colors to be [#COL].	$1,022
8300-0078	Chevron "A" style 4" 3M "Diamond Grade" striping on rear of body. Includes rear facing extrusions, panels and doors inboard/outboard of the beavertails(if applicable). Colors to be [#COL].	$4,017
8300-0079	Chevron "A" style 4" 3M "Diamond Grade" striping on rear pump panel/bleeder panel(s). Colors to be [#COL].	$670
8300-0080	Chevron "A" style 4" 3M "Diamond Grade" striping on front bumper. Colors to be [#COL].	$1,658
8300-0081	Chevron "A" style 3M "Diamond Grade" striping on rear of body outboard of beavertails (if equipped). Colors to be [#COL].	$1,191
8300-0082	[#COL] Scotchlite on nozzle guard.	$339
8300-0083	[#COL] Scotchlite on end of fly section	$525
8300-0084	Chevron "A" style 6" printed sheet Scotchlite striping on rear of body. Includes rear facing extrusions, panels and doors inboard/outboard of the beavertails(if applicable). Colors to be [#COL].	$2,176
8300-0085	Scotchlite stripe 1" located directly above and below existing stripe. Color: [#COL].	$605
8300-0086	Scotchlite 6" wide cab hockey stripe. Hockey located on front cab doors up to top of cab. Color: White.	$494
8300-0088	NFPA Scotchlite Stripe - 4" wide and straight on sides and rear of body only. Color: [#COL]. Location: [#LOC].	$748
8300-0090	Scotchlite stripe 1.5" located directly above and below existing stripe. Color: [#COL].	$642
8300-0091	1/4" Scotchlite pinstripe above and below existing stripe. Color: [#COL].	$925
8300-0093	Chevron "A" style 6" printed sheet Scotchlite striping on front bumper. Colors to be [#COL].	$1,054
8300-0094	Chevron "A" style 4" Scotchlite striping on rear body panels only, no extrusions. Colors to be [#COL].	$2,410
8300-0096	Reflective tape on two outriggers. Striping to alternate in an "A" pattern when viewed from the front or rear of the truck. Colors to be: [#COL].	$554
8300-0097	NFPA Scotchlite custom hockey stripe. Include 6" red stripe centered at front headlights with 2" white stripe below (no gap), additional 2" red below (no gap); hockey up on L3/R3 compt doors. Additional 2" red stripe 2" above bottom of cab doors and strai	$3,753
8300-0099	Chevron "A" style 6" printed sheet Scotchlite striping on rear of body between beavertails. Colors to be [#COL].	$1,648
8300-0100	Chevron "V" style 4" Scotchlite striping on rear ladder tunnel door(s) only. Colors to be [#COL].	$823

8300-0104	Chevron "V" style 3" Scotchlite striping on rear of body. Colors to be Red/White/Blue.	$3,213
8300-0109	Chevron "A" style 6" 3M "Diamond Grade" striping on rear of body. Includes rear facing extrusions, panels and doors inboard/outboard of the beavertails(if applicable). Colors to be [#COL].	$4,017
8300-0111	Chevron "A" style 6" individual Scotchlite striping on rear of body except for the pump/ladder tunnel access door. Colors to be [#COL].	$3,213
8300-0112	Chevron "A" style 6" Scotchlite striping on rear facing side of the slide out room. Colors to be [#COL].	$1,607
8300-0120	Chevron "A" style 6" 3M "Diamond Grade" striping on front bumper. Colors to be [#COL].	$1,658
8400-0000	Vision flags on canopy windows (PR).	$510
8400-0008	Star of life logo 12". Location: [#LOC].	$92
8400-0009	American Flag (EA). Approx size: 7"H x 14"W. Location: [#LOC]	$105
8400-0010	Install customer logo from an existing E-ONE design (EA). Location: [#LOC]	$169
8400-0011	Vision flag on officer canopy window.	$256
8400-0012	Star of life logo 22.5". Location: [#LOC]	$184
9000	**SUPPORT, DELIVERY, INSPECTIONS AND MANUALS**	
9300-0002	Aerial training manual (EA).	$30
9300-0009	Manuals, Operator and Service CD-ROM.	$315
9300-0010	Approval Drawings	$912
9300-0012	Pump panel approval drawings	$366
9300-0013	Approval Drawings Revised	$182
9300-0017	Manuals Printed (Set)	$826
9300-0018	Manuals, Operator and Service CD-ROM (additional set)	$45
9300-0020	Translated Manuals CD-ROM to Arabic	$6,762
9300-0038	Manuals, operator, service and exploded view parts CD-ROM.	$315
9300-0039	Manuals printed (set) with exploded view parts.	$826
9300-0040	As built electrical drawings.	$2,218
9300-0041	As built plumbing drawings.	$2,772
9300-0044	Transmission programming print-out - provided at delivery.	$106
9300-0045	Manuals Printed (Set). Includes (1) service, (1) parts and (5) operation manuals.	$826

Notes:

1) Availability of options are limited by other options selected, and not all options are available in every chassis/apparatus configuration. Selection of an option may require several of the above parts/items to complete the option package.

2) Certain options, alone or in combination with other options, may require heavier axle/suspension packages, longer frames, or reinforced frames at additional cost per the above price list.

3) To configure options, the E-One State Term Schedule authorized dealer will use quote configuration software to select the components necessary to effect the option, feature, or configuration requested and quote the total option price.

Fire Apparatus Quotation for:
STATE OF OHIO TERM SCHEDULE

Quotation Number: 35915 Rev: 3

Unit Description: WMST-COMM

Quote Description: Water Master 2000 Tanker – International 4400 2dr

Salesperson:

Salescode	Extended Description	Qty	
Watermaster Tanker Base Model			
0502-0001	A Water Master apparatus being compliant to NFPA 2009 (plumbing as applicable) or ULC (as applicable) to be provided.	1	
CHASSIS MODEL			
1005-0156	International 4400 (2) door, 215" WB, front tow hooks, 14K & 26K axles with ESC, Officer side vertical exhaust with pipe guard, ABS brakes, 50 gal driver side fuel tank, (3) 2100 CCA batteries, 320 alternator, ember separator and AC.	1	
1005-0165	Chassis Prep International with Maxx Force engineand single rear axle. Includes rear bumper/tow eyes, high idle, master light switch and master battery switch.	1	
1200-0117	International Maxx Force 330 HP engine with EVS3000 transmission. Includes Diamond Logix Exhaust Brake.	1	
BUMPERS			
1160-0056	OEM chrome front bumper.	1	
WHEEL OPTIONS			
1050-0050	International chassis rims painted job color. For use with single rear axle.	1	
TIRE OPTIONS			
1060-0055	Tire pressure monitoring valve stem caps. For use with a chassis with 14K front and 26K rear axle.	1	
ENGINES & TRANSMISSIONS			
1200-0122	Electronically limited speed to 60 MPH.	1	
CHASSIS OPTIONS			
1680-0142	Two (2) hood-mounted air horns with driver and officer mounted foot switches. International.	1	
1680-0143	The commercial chassis to have seat belt and chassis pre-wiring for NFPA seating	1	

Salescode	Extended Description	Qty	
CHASSIS OPTIONS			
	indicator and vehicle data recorder.		
1680-0149	International 4400 Model Year and 2010 EPA Engine Surcharge.	1	
SEATS			
1510-0142	Seating Package Two (2) Door International. Includes One (1) Gra-Mag fixed driver seat and (1) Gra-Mag fixed officer seat.	1	
1510-0143	One (1) two person seating capacity tag- driver side area and two (2) seat belt warning tags- one (1) each cab door. For use with International chassis.	1	
MISC INTERIOR CAB OPTIONS			
1685-0142	Main control console. Locate in cab centered between driver and officer. Includes NFPA in-cab controls/switching.	1	
1685-0143	Cab gauge cluster with english dominant.	1	
CAB ELECTRICAL OPTIONS			
1750-0204	Battery charger with indicator, inlet receptacle and air inlet with mounting plate. Locate to driver side of cab below driver door opening.	1	
BODY MODEL			
3080-0082	Single axle body with 2000 gallon tank. Includes driver side forward body access to vacuum pump, compartments L1/R1 with satin roll-up doors with header, driver and officer side compartment top storage areas (driver side includes double hose restraints) and rear body/bumper trim.	1	
COVERS			
3305-0073	Vinyl double crosslay cover. Includes mechanical hold-downs on top outer corners and quick release side flap hold downs. Cover color: Red	1	
PUMP MODULE			
3130-0253	Side mount pump module. Includes upper area for double stacked double preconnects.	1	
LADDER STORAGE / RACKS			
3365-0150	Manually operated drop down rack on officer body. Secures portable folding tank with capacity of main tank on body.	1	
PUMPS			
4005-0064	PM80 Vacuum Pump. Includes primary and secondary shut offs, (4) water level gauges- (3) body and (1) cab and the (3) inlets/outlets with switching.	1	
4005-0072	PTO for use with PM80 vacuum pump and EVS3000 transmission.	1	

Salescode	Extended Description	Qty	
PUMPS			
4005-0075	PTO for use with AP50 pump and EVS3000 transmission.	1	
PLUMBING KITS			
4410-0016	Plumbing kit with Hale AP50 (with officer side steamer) pump. Includes (1) 2.5" Driver Side Discharge with droop and cap, (1) 2.5" Officer Side Discharge with droop and cap and (2) 1.5" Crosslay Discharges. The discharges are to be labeled and color coded in compliance with current NFPA.	1	
PUMP OPTIONS			
4015-0093	The optional pump to be NFPA or ULC (as applicable) compliant. Includes primer, pump shift and indicators, (1) 2.5" driver side aux. intake with swing handle and test ports.	1	
4015-0094	Engine cooler. For use with International 4400 chassis.	1	
PRESSURE GOVERNORS			
4465-0014	FRC In-Control pressure governor. Includes engine and master pump gauges. For use with International MaxxForce engines.	1	
GAUGES			
4435-0141	Pump module discharge gauges (4) to be english dominant. For use with AP/MBP pumps.	1	
ELECTRICAL SYSTEMS			
5010-0020	Body and cab electrical system.	1	
WARNING LIGHT PACKAGES			
5380-0104	Federal Signal LED lower level body warning light package. Includes (6) LED light heads with bezels located (1) each side forward of the rear wheel well, (1) each side rearward of the rear wheel well and (1) each side on rear of body down low below the taillights (offset outboard).	1	
5380-0105	Federal Signal LED lower level cab warning light package. Includes light heads with bezels located (1) each side of hood area and (1) each side forward facing mounted in grill area.	1	
WARNING LIGHTS			
5600-0203	Federal Model SY12FS Sentry (PR)- red driver/amber officer. Location: Upper rear tank.	1	
DOT LIGHTING			
5150-0088	DOT STT/BU lighting. Includes red LED stop/tail/turn and clear incandescent back-up lights. Lights mounted horizontally on the rear of the body	1	

Salescode	Extended Description	Qty	
DOT LIGHTING			
5150-0089	Vehicle data recorder - 2009 NFPA compliant. Includes occupant detection with display. Display location on cab dash near the transmission shifter.	1	
LIGHTS - COMPARTMENT, STEP & GROUND			
5380-0101	Cab (FS) LED ground lighting package with LED step lighting. Includes (1) Federal Signal light per side below the cab lower steps and (1) LED step light below the lower area of the cab for step lighting.	1	
5380-0103	Federal Signal JetSolaris model JLX6001C 60" LED with red Solaris reflectors with clear domes. Location: Centered on the front cab roof	1	
5380-0106	LED (FS) compartment light package. For use in L1 and R1 compartments.	1	
5380-0107	LED (FS) underbody ground lighting. Includes lighting below the forward body and below the rear body.	1	
LIGHTS - NON-WARNING			
5400-0094	(6) scene lighting package. Locate lights - (2) each side of tank and (2) at rear of tank/body.	1	
CAMERAS / INTERCOM			
5350-0106	Camera system. Includes in-cab mounted monitor and officer side and rear body mounted cameras.	1	
MISC ELECTRICAL			
5110-0047	NFPA cab siren and speaker (FS) package. Includes (1) PA300 siren with (1) ES100 speaker officer side behind bumper cut-out (includes mounting bracket).	1	
HOSE / NOZZLES			
7700-0093	Adaptor, hose and strainer package. For use with vacuum pump system. For use with 2000 gallon tank.	1	
EXTERIOR PAINT			
8100-0196	Cab paint FLNA 3225 Red. International NAV2810.	1	
LETTERING			
8200-0043	3" Scotchlite Letters (60). Includes shade and outline per letter.	1	
STRIPING			
8300-0106	Chevron "A" style 6" Scotchlite striping on rear of tank. Colors to be Yellow/Red.	1	
8300-0107	4" White/Red Scotchlite stripe. Locate white on cab with bottom of stripe even with bottom of cab. The red is to be straight on the body side storage trays.	1	

Salescode	Extended Description	Qty	
PRICE			$221,032

STATE OF OHIO TERM SCHEDULE

4200 SURFACE RD
COLUMBUS, OH 43228

Quote No: 35915

12/7/2009

Quote Rev:3 Drawing Rev:1

2000 GALLON TANK

500 GPM PUMP

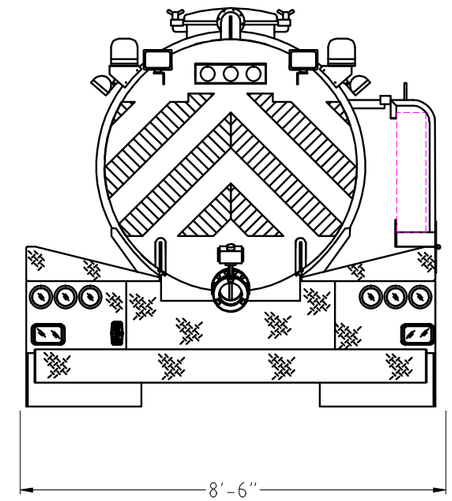

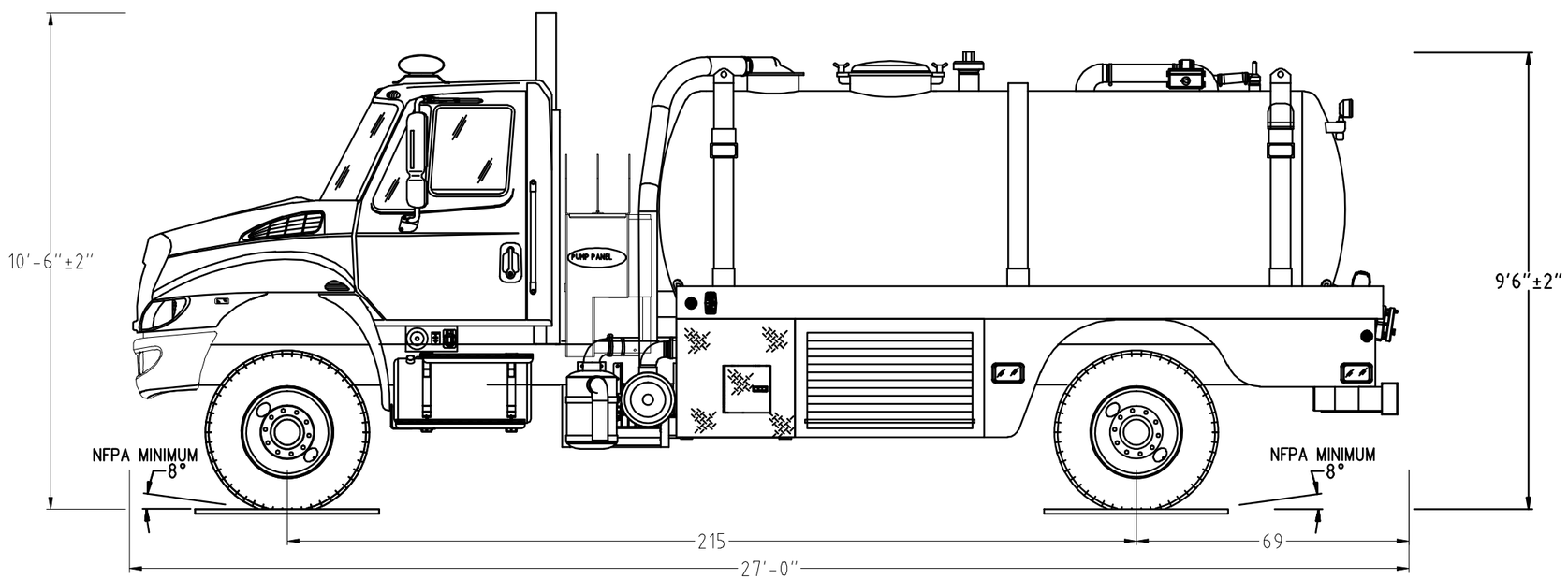

POWERED BY EZDRAW

Notice: This drawing provides a GENERAL REPRESENTATION of the vehicle configuration and should be used for evaluation purposes. The respective dimensions shown,including overall height and length, are estimates and may vary due to manufacturing processes. All other items such as lighting and fixtures, plumbing, compartmentation, and other generally assembled details are shown for REFERENCE ONLY and may not be a direct reflection of the final truck configuration. In ALL situations where this drawing may conflict with the specifications, THE SPECIFICATIONS, AS REFLECTED IN THE APPROVED SHOP ORDER, SHALL PREVAIL. Unless otherwise specified, the proposed apparatus will be manufactured to the latest NFPA recommendations as well as other applicable federally regulated safety regulations. E-One reserves the right to engineer and incorporate design improvements and changes without notice, while adhering to the intent of the specification.

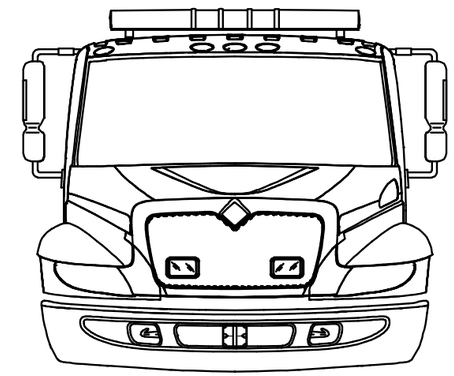

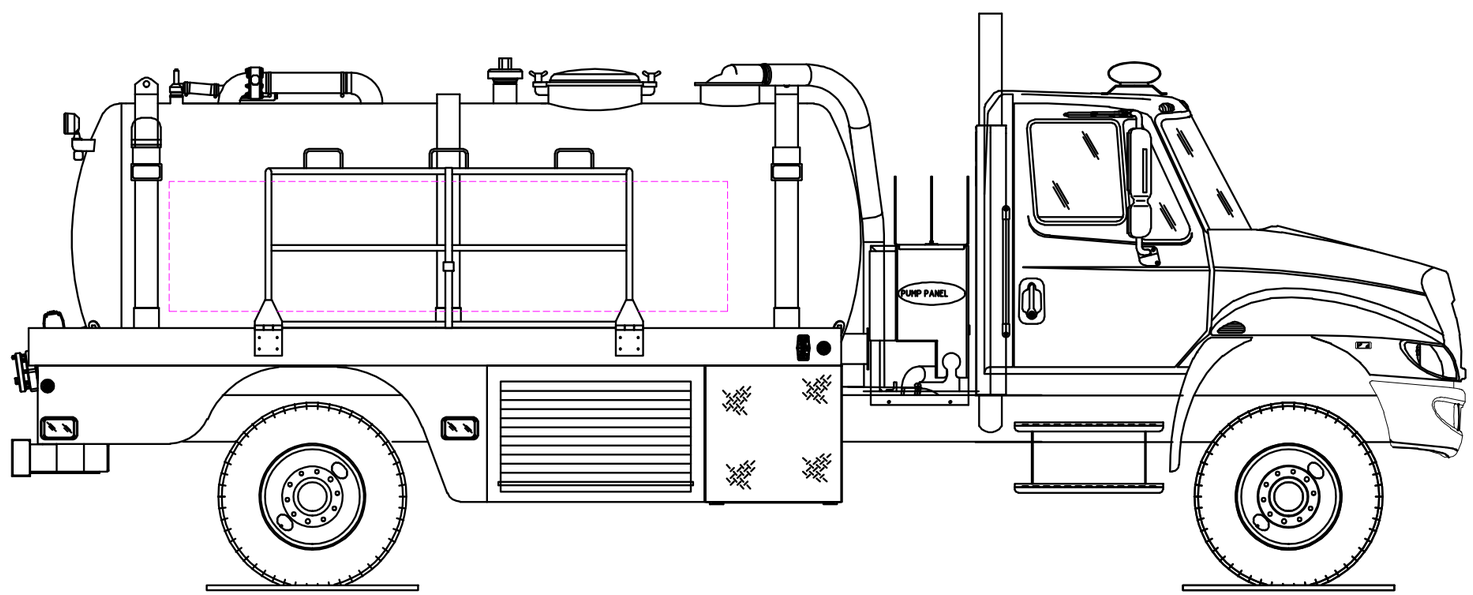

POWERED BY

EZDRAW

Fire Apparatus Quotation for:
STATE OF OHIO TERM SCHEDULE

Quotation Number: 35916 Rev: 3

Unit Description: WMST-COMM

Quote Description: Water Master 3000 Tanker – International 7400 2dr

Salesperson:

Salescode	Extended Description	Qty	
Watermaster Tanker Base Model			
0502-0001	A Water Master apparatus being compliant to NFPA 2009 (plumbing as applicable) or ULC (as applicable) to be provided.	1	
CHASSIS MODEL			
1005-0161	International 7400 (2) door, 242" WB, front tow hooks, 18K & 40K tandem axle with ESC, Officer side vertical exhaust with pipe guard, ABS brakes, 50 gal driver side fuel tank, (3) 2100 CCA batteries, 320 alternator, ember separator and AC.	1	
1005-0166	Chassis Prep International with Maxx Force engineand tandem rear axle. Includes rear bumper/tow eyes, high idle, master light switch and master battery switch.	1	
1200-0117	International Maxx Force 330 HP engine with EVS3000 transmission. Includes Diamond Logix Exhaust Brake.	1	
BUMPERS			
1160-0056	OEM chrome front bumper.	1	
WHEEL OPTIONS			
1050-0052	International chassis rims painted job color. For use with tandem rear axle.	1	
TIRE OPTIONS			
1060-0057	Tire pressure monitoring valve stem caps. For use with a chassis with 18K front and 40K tandem rear axle.	1	
ENGINES & TRANSMISSIONS			
1200-0122	Electronically limited speed to 60 MPH.	1	
CHASSIS OPTIONS			
1680-0142	Two (2) hood-mounted air horns with driver and officer mounted foot switches. International.	1	
1680-0143	The commercial chassis to have seat belt and chassis pre-wiring for NFPA seating	1	

Salescode	Extended Description	Qty	
CHASSIS OPTIONS			
	indicator and vehicle data recorder.		
1680-0150	International 7400 Model Year and 2010 EPA Engine Surcharge.	1	
SEATS			
1510-0142	Seating Package Two (2) Door International. Includes One (1) Gra-Mag fixed driver seat and (1) Gra-Mag fixed officer seat.	1	
1510-0143	One (1) two person seating capacity tag- driver side area and two (2) seat belt warning tags- one (1) each cab door. For use with International chassis.	1	
MISC INTERIOR CAB OPTIONS			
1685-0142	Main control console. Locate in cab centered between driver and officer. Includes NFPA in-cab controls/switching.	1	
1685-0143	Cab gauge cluster with english dominant.	1	
CAB ELECTRICAL OPTIONS			
1750-0204	Battery charger with indicator, inlet receptacle and air inlet with mounting plate. Locate to driver side of cab below driver door opening.	1	
BODY MODEL			
3080-0084	Tandem axle body with 3000 gallon tank. Includes driver side forward body access to vacuum pump, compartments L1/R1 with satin roll-up doors with header, driver and officer side compartment top storage areas (driver side includes double hose restraints) and rear body/bumper trim.	1	
COVERS			
3305-0073	Vinyl double crosslay cover. Includes mechanical hold-downs on top outer corners and quick release side flap hold downs. Cover color: Red	1	
PUMP MODULE			
3130-0253	Side mount pump module. Includes upper area for double stacked double preconnects.	1	
LADDER STORAGE / RACKS			
3365-0150	Manually operated drop down rack on officer body. Secures portable folding tank with capacity of main tank on body.	1	
PUMPS			
4005-0065	PM100 Vacuum Pump (for use with APH or MBP pumps only). Includes primary and secondary shut offs, (4) water level gauges- (3) body and (1) cab and the (3) inlets/outlets with switching.	1	
4005-0073	PTO for use with PM100 vacuum pump and EVS3000 transmission.	1	

Salescode	Extended Description	Qty	
PUMPS			
4005-0075	PTO for use with AP50 pump and EVS3000 transmission.	1	
PLUMBING KITS			
4410-0016	Plumbing kit with Hale AP50 (with officer side steamer) pump. Includes (1) 2.5" Driver Side Discharge with droop and cap, (1) 2.5" Officer Side Discharge with droop and cap and (2) 1.5" Crosslay Discharges. The discharges are to be labeled and color coded in compliance with current NFPA.	1	
PUMP OPTIONS			
4015-0093	The optional pump to be NFPA or ULC (as applicable) compliant. Includes primer, pump shift and indicators, (1) 2.5" driver side aux. intake with swing handle and test ports.	1	
4015-0095	Engine cooler. For use with International 7400 chassis.	1	
PRESSURE GOVERNORS			
4465-0014	FRC In-Control pressure governor. Includes engine and master pump gauges. For use with International MaxxForce engines.	1	
GAUGES			
4435-0141	Pump module discharge gauges (4) to be english dominant. For use with AP/MBP pumps.	1	
ELECTRICAL SYSTEMS			
5010-0020	Body and cab electrical system.	1	
WARNING LIGHT PACKAGES			
5380-0104	Federal Signal LED lower level body warning light package. Includes (6) LED light heads with bezels located (1) each side forward of the rear wheel well, (1) each side rearward of the rear wheel well and (1) each side on rear of body down low below the taillights (offset outboard).	1	
5380-0105	Federal Signal LED lower level cab warning light package. Includes light heads with bezels located (1) each side of hood area and (1) each side forward facing mounted in grill area.	1	
WARNING LIGHTS			
5600-0203	Federal Model SY12FS Sentry (PR)- red driver/amber officer. Location: Upper rear tank.	1	
DOT LIGHTING			
5150-0088	DOT STT/BU lighting. Includes red LED stop/tail/turn and clear incandescent back-up lights. Lights mounted horizontally on the rear of the body	1	

Salescode	Extended Description	Qty	
DOT LIGHTING			
5150-0089	Vehicle data recorder - 2009 NFPA compliant. Includes occupant detection with display. Display location on cab dash near the transmission shifter.	1	
LIGHTS - COMPARTMENT, STEP & GROUND			
5380-0101	Cab (FS) LED ground lighting package with LED step lighting. Includes (1) Federal Signal light per side below the cab lower steps and (1) LED step light below the lower area of the cab for step lighting.	1	
5380-0103	Federal Signal JetSolaris model JLX6001C 60" LED with red Solaris reflectors with clear domes. Location: Centered on the front cab roof	1	
5380-0106	LED (FS) compartment light package. For use in L1 and R1 compartments.	1	
5380-0107	LED (FS) underbody ground lighting. Includes lighting below the forward body and below the rear body.	1	
LIGHTS - NON-WARNING			
5400-0094	(6) scene lighting package. Locate lights - (2) each side of tank and (2) at rear of tank/body.	1	
CAMERAS / INTERCOM			
5350-0106	Camera system. Includes in-cab mounted monitor and officer side and rear body mounted cameras.	1	
MISC ELECTRICAL			
5110-0048	NFPA cab siren and speaker (FS) package. Includes (1) PA300 siren with (1) ES100 speaker located center in front bumper (includes mounting bracket).	1	
HOSE / NOZZLES			
7700-0090	Adaptor, hose and strainer package. For use with vacuum pump system. For use with 3000 to 4000 gallon tanks.	1	
EXTERIOR PAINT			
8100-0196	Cab paint FLNA 3225 Red. International NAV2810.	1	
LETTERING			
8200-0043	3" Scotchlite Letters (60). Includes shade and outline per letter.	1	
STRIPING			
8300-0106	Chevron "A" style 6" Scotchlite striping on rear of tank. Colors to be Yellow/Red.	1	
8300-0107	4" White/Red Scotchlite stripe. Locate white on cab with bottom of stripe even with bottom of cab. The red is to be straight on the body side storage trays.	1	

Salescode	Extended Description	Qty	
PRICE			$242,059.

STATE OF OHIO TERM SCHEDULE

4200 SURFACE RD
COLUMBUS, OH 43228

Quote No: 35916

12/7/2009

Quote Rev:3 Drawing Rev:1

3000 GALLON TANK

500 GPM PUMP

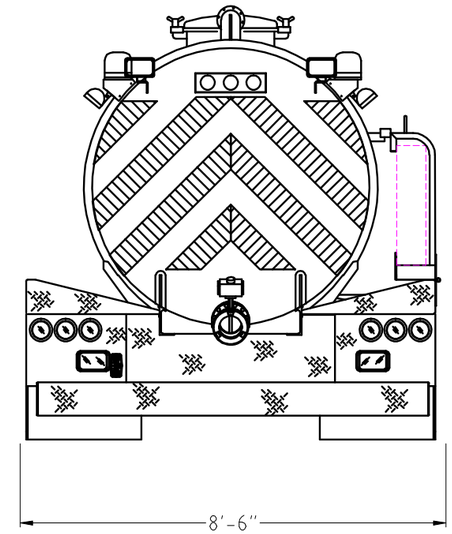

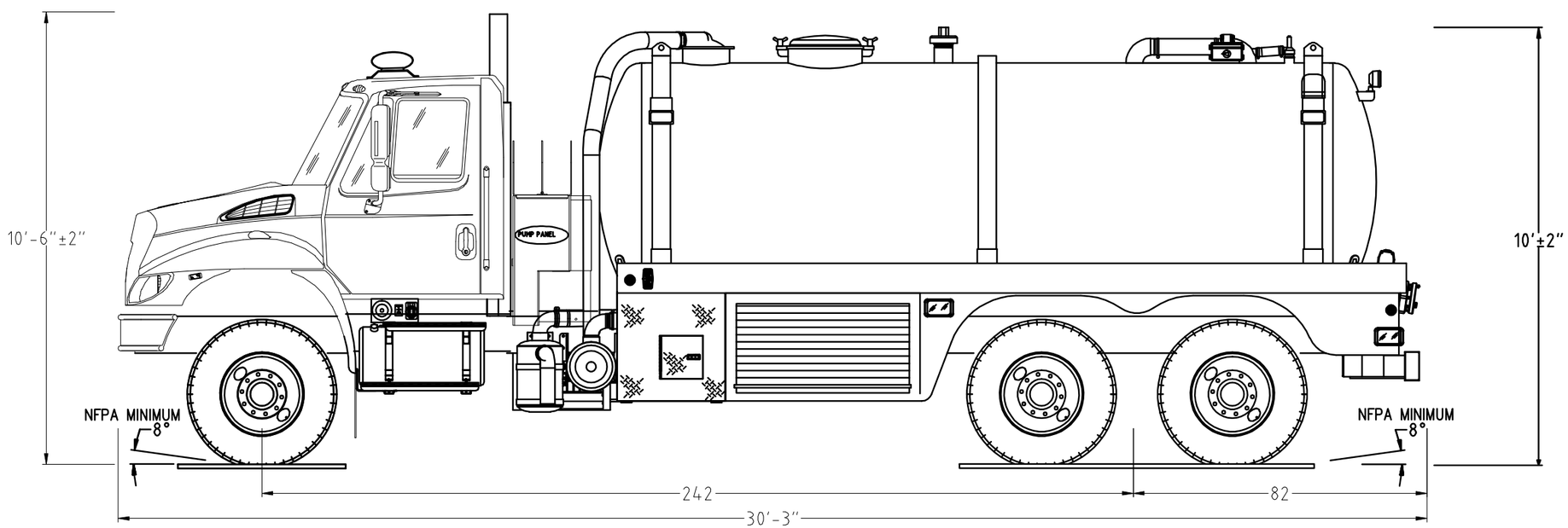

POWERED BY EZDRAW

Notice: This drawing provides a GENERAL REPRESENTATION of the vehicle configuration and should be used for evaluation purposes. The respective dimensions shown,including overall height and length, are estimates and may vary due to manufacturing processes. All other items such as lighting and fixtures, plumbing, compartmentation, and other generally assembled details are shown for REFERENCE ONLY and may not be a direct reflection of the final truck configuration. In ALL situations where this drawing may conflict with the specifications, THE SPECIFICATIONS, AS REFLECTED IN THE APPROVED SHOP ORDER, SHALL PREVAIL. Unless otherwise specified, the proposed apparatus will be manufactured to the latest NFPA recommendations as well as other applicable federally regulated safety regulations. E-One reserves the right to engineer and incorporate design improvements and changes without notice, while adhering to the intent of the specification.

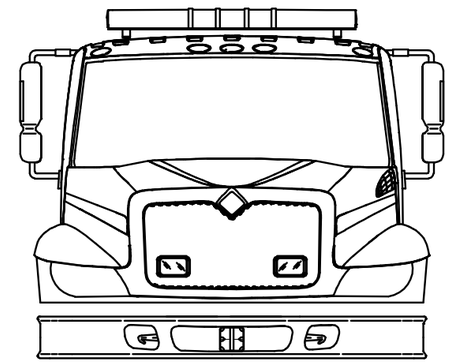

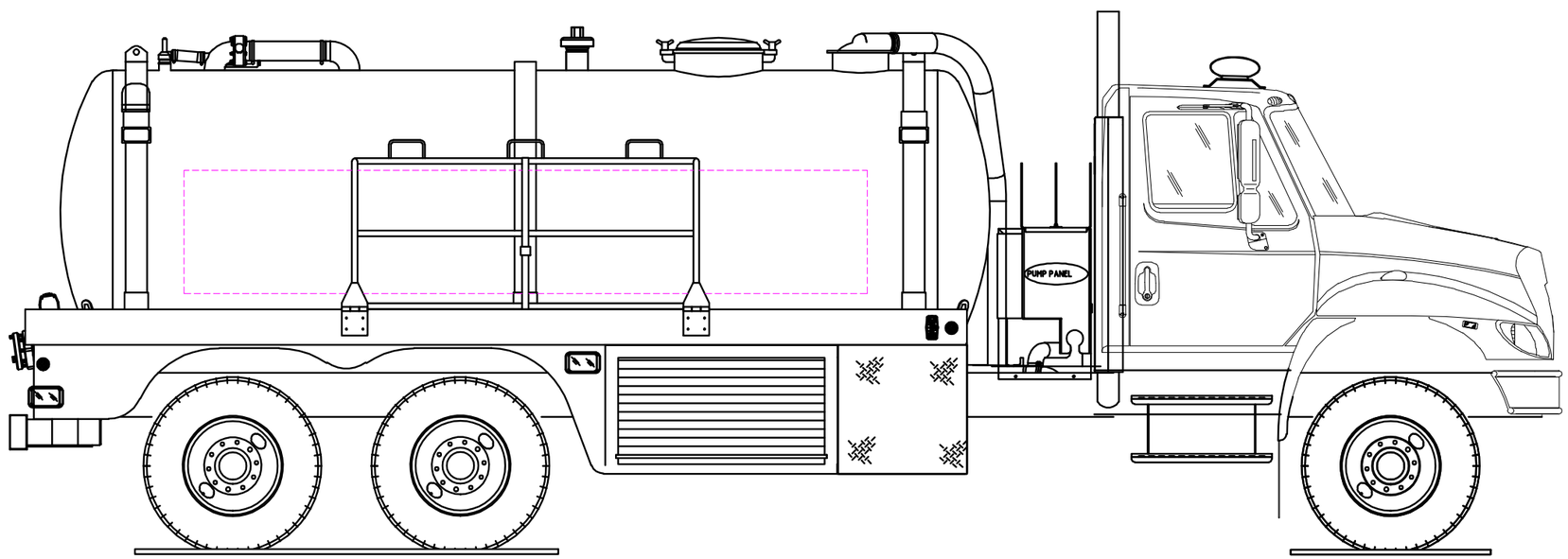

POWERED BY EZDRAW

1000	**Chassis**	
1005-0159	International 4400 (2) door, 221" WB, front tow hooks, 14K & 30K axles with ESC, Officer side vertical exhaust with pipe guard, ABS brakes, 50 gal driver side fuel tank, (3) 2100 CCA batteries, 320 alternator, ember separator and AC.	840.00
1005-0160	International 4400 (2) door, 238" WB, front tow hooks, 14K & 30K axles with ESC, Officer side vertical exhaust with pipe guard, ABS brakes, 50 gal driver side fuel tank, (3) 2100 CCA batteries, 320 alternator, ember separator and AC.	840.00
1005-0161	International 7400 (2) door, 242" WB, front tow hooks, 18K & 40K tandem axle with ESC, Officer side vertical exhaust with pipe guard, ABS brakes, 50 gal driver side fuel tank, (3) 2100 CCA batteries, 320 alternator, ember separator and AC.	11,956.00
1005-0162	International 7400 (2) door, 258" WB, front tow hooks, 18K & 40K tandem axle with ESC, Officer side vertical exhaust with pipe guard, ABS brakes, 50 gal driver side fuel tank, (3) 2100 CCA batteries, 320 alternator, ember separator and AC.	11,956.00
1005-0163	International 7600 (2) door, 242" WB, front tow hooks, 20K & 46K tandem axle with ESC, Officer side vertical exhaust with pipe guard, ABS brakes, 50 gal driver side fuel tank, (3) 2100 CCA batteries, 320 alternator, ember separator and AC.	33,545.00
1005-0164	International 7600 (2) door, 258" WB, front tow hooks, 20K & 46K tandem axle with ESC, Officer side vertical exhaust with pipe guard, ABS brakes, 50 gal driver side fuel tank, (3) 2100 CCA batteries, 320 alternator, ember separator and AC.	33,925.00
1005-0167	International 7400 (2) door, 242" WB, front tow hooks, 18K & 46K tandem axle with ESC, Officer side vertical exhaust with pipe guard, ABS brakes, 50 gal driver side fuel tank, (3) 2100 CCA batteries, 320 alternator, ember separator and AC.	14,405.00
1005-0168	International 7400 (2) door, 258" WB, front tow hooks, 18K & 46K tandem axle with ESC, Officer side vertical exhaust with pipe guard, ABS brakes, 50 gal driver side fuel tank, (3) 2100 CCA batteries, 320 alternator, ember separator and AC.	14,405.00
1005-0173	International 7600 (2) door, 242" WB, front tow hooks, 20K & 46K tandem axle with ESC and 4500 6 speed transmission, Officer side vertical exhaust with pipe guard, ABS brakes, 50 gal driver side fuel tank, (3) 2100 CCA batteries, 320 alternator, ember separator, AC, electric cab windows and door locks and hood mounted convex mirrors.	33,545.00
1025-0082	Driver Controlled Dif Lock. For use with International chassis with 26K rear axle.	790.00
1025-0083	Driver Controlled Dif Lock. For use with International chassis with 30K rear axle.	792.00
1025-0084	Driver Controlled Dif Lock (Forward axle). For use with International chassis with 40K tandem rear axle.	767.00
1025-0085	Driver Controlled Dif Lock (Forward axle). For use with International chassis with 46K tandem rear axle.	597.00
1050-0051	International chassis rims aluminum. For use with single rear axle.	1,340.00
1050-0053	International chassis rims aluminum. For use with tandem rear axle.	1,862.00
1060-0056	Tire pressure monitoring valve stem caps. For use with a chassis with 14K front and 30K rear axle.	45.00
1060-0057	Tire pressure monitoring valve stem caps. For use with a chassis with 18K front and 40K tandem rear axle.	62.00
1060-0058	Tire pressure monitoring valve stem caps. For use with a chassis with 18K front and 46K tandem rear axle.	62.00
1060-0059	Tire pressure monitoring valve stem caps. For use with a chassis with 20K front and 46K tandem rear axle.	62.00
1200-0123	Engine block heater. Locate receptacle below the driver side cab door.	193.00
1510-0141	Seating Package Two (2) Door International. Includes One (1) National Brand air suspended driver seat and (1) National Brand air suspended officer seat.	399.00
1680-0138	Cab step area trim plates provided on the driver and officer side.	193.00
1680-0139	Cab step area trim plates provided on the driver and officer side.	193.00
1680-0140	Cab step area trim plates provided on the driver and officer side.	193.00
1680-0142	Two (2) hood-mounted air horns with driver and officer mounted foot switches. International.	813.00
1680-0149	International 4400 Model Year and 2010 EPA Engine Surcharge.	7,590.00
1680-0150	International 7400 Model Year and 2010 EPA Engine Surcharge.	7,838.00
1680-0151	International 7600 Model Year and 2010 EPA Engine Surcharge.	10,038.00
1680-0152	Freightliner Model Year and 2010 EPA Engine Surcharge.	8,580.00
1680-0155	International 7400 Model Year Surcharge only	1,238.00
1680-0157	International 4400 2011 Model Year Surcharge Only	990.00
1685-0144	Cab gauge cluster with metric dominant.	293.00
1750-0202	Kussmaul battery charger with air compressor and air inlet. The battery charger receptacle and air inlet to include auto-eject. Locate to driver side below the driver door.	946.00
3000	**Body**	
3080-0084	Tandem axle body with 3000 gallon tank. Includes driver side forward body access to vacuum pump, compartments L1/R1 with satin roll-up doors with header, driver and officer side compartment top storage areas (driver side includes double hose restraints) and rear body/bumper trim.	5,662.00
3080-0085	Tandem axle body with 3500 gallon tank. Includes driver side forward body access to vacuum pump, compartments L1/R1 with satin roll-up doors with header, driver and officer side compartment top storage areas (driver side includes double hose restraints) and rear body/bumper trim.	8,161.00
3080-0086	Tandem axle body with 4000 gallon tank. Includes driver side forward body access to vacuum pump, compartments L1/R1 with satin roll-up doors with header, driver and officer side compartment top storage areas (driver side includes double hose restraints) and rear body/bumper trim.	10,661.00
3080-0092	Single axle body with 2500 gallon tank (with auxiliary rear tank fill). Includes driver side forward body access to vacuum pump, compartments L1/R1 with satin roll-up doors with header, driver and officer side compartment top storage areas (driver side includes double hose restraints) and rear body/bumper trim.	2,508.00
3080-0093	Tandem axle body with 3000 gallon tank (with auxiliary rear tank fill). Includes driver side forward body access to vacuum pump, compartments L1/R1 with satin roll-up doors with header, driver and officer side compartment top storage areas (driver side includes double hose restraints) and rear body/bumper trim.	5,662.00

3080-0094	Tandem axle body with 3500 gallon tank (with auxiliary rear tank fill). Includes driver side forward body access to vacuum pump, compartments L1/R1 with satin roll-up doors with header, driver and officer side compartment top storage areas (driver side includes double hose restraints) and rear body/bumper trim.	7,864.00
3080-0095	Tandem axle body with 4000 gallon tank (with auxiliary rear tank fill). Includes driver side forward body access to vacuum pump, compartments L1/R1 with satin roll-up doors with header, driver and officer side compartment top storage areas (driver side includes double hose restraints) and rear body/bumper trim.	10,661.00
3130-0263	Side mount pump module. Includes upper area for double stacked double preconnects with area for dead lay of hose. Side panels to be stainless steel and backside of module to have diamond plate trim. Includes red crosslay cover with mechanical hold downs and quick release side flaps.	990.00
3320-0026	(2) SCBA Storage. Located (1) each side and rearward of the rear axle.	598.00
3320-0035	SCBA Bottle storage - behind the cab qty of (4)	598.00
3320-0036	(4) SCBA Storage. Located (2) each side and rearward of the rear axle.	1,220.00
3340-0325	(PR) NFPA compliant wheel chocks. Locate (1) each side rearward fo the rear axle.	717.00
3340-0326	Storage compartment driver side compartment top. Locate to forward area. Includes roll-up door (wired to door ajar) with header and (1) interior strip light.	1,987.00
3365-0151	Zico electric drop down rack on officer body. Secures portable folding tank with capacity of main tank on body.	6,164.00
3365-0152	Diamond plate portable folding tank cover. For use with 2000 tank and Zico drop down rack.	715.00
3365-0153	Diamond plate portable folding tank cover. For use with 2500 tank and Zico drop down rack.	715.00
3365-0154	(2) Zico quic-mount brackets (1 brackets supports 2 poles) with rubber pull-over hold-downs. Locate in driver side compartment top storage outboard. Position for use with (2) 6' pike poles.	165.00
3365-0157	Diamond plate portable folding tank cover. For use with 3000 tank and Zico drop down rack.	715.00
3365-0158	Diamond plate portable folding tank cover. For use with 3500 tank and Zico drop down rack.	715.00
3365-0159	Diamond plate portable folding tank cover. For use with 4000 tank and Zico drop down rack.	715.00
3365-0160	Manually operated drop down rack on driver . Secures portable folding tank with capacity of main tank on body.	836.00
3365-0161	Zico electric drop down rack on driver body. Secures portable folding tank with capacity of main tank on body.	6,287.00
3365-0169	Triple hardsuction storage with NFPA compliant restraints. Locate driver side of tank with fixed mounted brackets. Trays to formed diamond plate (diamonds out) and sized to hold 6" x 15' hardsuction hose.	1,485.00
		0.00
4005-0065	PM100 Vacuum Pump (for use with APH or MBP pumps only). Includes primary and secondary shut offs, (4) water level gauges- (3) body and (1) cab and the (3) inlets/outlets with switching.	2,833.00
4005-0084	PM100 Vacuum Pump (for use with DSD pump only). Includes primary and secondary shut offs, (4) water level gauges- (3) body and (1) cab and the (3) inlets/outlets with switching.	2,833.00
4005-0088	Hydraulically driven PM 100 vacuum pump and APH50 water pump. Hydraulic motor driven by PTO on driver side of EVS 4000 series transmission. 40 gallon hydraulic reservoir. Vacuum pump system includes primary and secondary shut-offs, 4 water level gauges ? 3 body and 1 cab and the (3) inlets/outlets with switching.	2,833.00
4015-0096	Engine cooler. For use with International 7600 chassis.	2,669.00
4015-0097	Heated intake collars (4). Located (1) on each vacuum pump intakes, rear tank inlet and (1) rear tank fill.	1,720.00
4015-0099	Zinc Anodes for Hale Pump and tank - (Pair) (1) pump and (1) tank.	651.00
4405-0057	Booster Reel. Reel to have capacity of 200' of 1" (not included). Includes aluminum plate enclosure on lower frame mount and the upper diamond plate panel forward of R1 will be reduced in size for the reel to fit under that area, easily accessible rewind switch, rollers and air blow-out. Locate officer side lower forward body/pump area.	3,334.00
4410-0014	Plumbing kit with Hale AP50 (without officer side steamer) pump. Includes (1) 2.5" Driver Side Discharge with droop and cap, (1) 2.5" Officer Side Discharge with droop and cap and (2) 1.5" Crosslay Discharges.	23,187.00
4410-0015	Plumbing Kit with Hale DSD pump. Includes (1) 2.5" Driver Side Discharge with droop and cap, (2) 2.5" Officer Side Discharges with droops and caps and (2) 1.5" Crosslay Discharges.	21,581.00
4410-0016	Plumbing kit with Hale AP50 (with officer side steamer) pump. Includes (1) 2.5" Driver Side Discharge with droop and cap, (1) 2.5" Officer Side Discharge with droop and cap and (2) 1.5" Crosslay Discharges. The discharges are to be labeled and color coded in compliance with current NFPA.	24,837.00
4410-0017	Plumbing Kit for use with a Hale DSD NFPA pump. Includes (1) FRC In-Control display, (1) 2.5" Driver Side Discharge with droop and cap, (2) 2.5" Officer Side Discharges with droops and caps and (2) 2.5" Crosslay Discharges. The discharges are to be labeled and color coded in compliance with current NFPA.	36,772.00
4410-0018	Plumbing Kit with Hale MBP500 pump. Includes (1) 2.5" Driver Side Discharge with droop and cap, (1) 2.5" Officer Side Discharge with droop and cap and (2) 1.5" Crosslay Discharges.	29,153.00
4410-0019	Plumbing Kit with Hale MBP500 NFPA pump. Includes (1) 2.5" Driver Side Discharge with droop and cap, (1) 2.5" Officer Side Discharge with droop and cap and (2) 2.5" Crosslay Discharges. The discharges are to be labeled and color coded in compliance with current NFPA.	30,803.00
4410-0020	Plumbing Kit with Hale MBP1000 pump. Includes (1) 2.5" Driver Side Discharge with droop and cap, (1) 2.5" Officer Side Discharge with droop and cap and (2) 1.5" Crosslay Discharges.	29,153.00
4410-0021	Plumbing Kit with Hale MBP1000 NFPA pump. Includes (1) 2.5" Driver Side Discharge with droop and cap, (1) 2.5" Officer Side Discharge with droop and cap and (2) 1.5" Crosslay Discharges. The discharges are to be labeled and color coded in compliance with current NFPA.	30,803.00
4410-0022	Plumbing kit with Hale APH50 (with officer side steamer) hydraulically driven pump. Includes (1) 2.5" Driver Side Discharge with droop and cap, (1) 2.5" Officer Side Discharge with droop and cap and (2) 1.5" Crosslay Discharges. The discharges are to be labeled and color coded in compliance with current NFPA.	5,376.00
4410-0023	Plumbing kit with Hale AP (with officer side steamer) pump rated for 2000 LPM. Includes (1) 2.5" Driver Side Discharge with droop and cap, (1) 2.5" Officer Side Discharge with droop and cap and (2) 1.5" Crosslay Discharges. The discharges are to be labeled and color coded in compliance with current ULC.	24,837.00

4410-0024	Plumbing Kit with Hale MBP pump with rating of 2000 LPM. Includes (1) 2.5" Driver Side Discharge with droop and cap, (1) 2.5" Officer Side Discharge with droop and cap and (2) 2.5" Crosslay Discharges. The discharges are to be labeled and color coded in compliance with current ULC.	30,803.00
4410-0025	Plumbing Kit with Hale MBP pump rated at 3000 LPM. Includes (1) 2.5" Driver Side Discharge with droop and cap, (1) 2.5" Officer Side Discharge with droop and cap and (2) 1.5" Crosslay Discharges. The discharges are to be labeled and color coded in compliance with current ULC.	30,803.00
4410-0026	Plumbing Kit for use with a Hale DSD (5000LPM) ULC pump. Includes (1) FRC In-Control display, (1) 2.5" Driver Side Discharge with droop and cap, (2) 2.5" Officer Side Discharges with droops and caps and (2) 2.5" Crosslay Discharges. The discharges are to be labeled and color coded in compliance with current NFPA.	36,772.00
4415-0664	Front bumper 1.5" pre-connect with manual valve. Locate pre-connect in front bumper tray down low on rear wall. Includes air-blow out and bleeder valve.	4,402.00
4415-0717	1.5" front bumper discharge line. Includes air actuated Akron valve with switching located in cab on console. Discharge line to terminate just below driver side of bumper with male NPT threads (line is for use with dealer installed bumper turret. Dealer responsible for plumbing application and any additional length of line or connectors). Secure line as required and cap. Includes cab mounted pressure gauge and side panel bleeder and blow-out.	1,843.00
4417-0093	Akron FireFox remote control monitor. Located above pump area with joystick controller at cab console. For use with AP or MBP pumps.	9,680.00
4417-0094	Akron FireFox remote control monitor. Located above pump area with joystick controller at cab console. For use with DSD pump.	8,918.00
4417-0095	Monitor and Reel kit. Includes (1) Akron FireFox remote control monitor. Located above pump area with joystick controller at cab console and (1) Booster Reel with a capacity for 200' of 1" (not included). Includes aluminum plate enclosure with easily accessible rewind switch, rollers and air blow-out. Locate officer side lower pump area. For use with AP or MBP pumps.	12,179.00
4417-0096	Monitor and Reel kit. Includes (1) Akron FireFox remote control monitor. Located above pump area with joystick controller at cab console and (1) Booster Reel with a capacity for 200' of 1" (not included). Includes aluminum plate enclosure with easily accessible rewind switch, rollers and air blow-out. Locate officer side lower pump area. For use with DSD pump.	12,179.00
4435-0145	Additional discharge gauge(s). Includes english dominant reading.	140.00
4435-0146	Additional discharge gauge(s). Includes metric dominant reading.	143.00
5000	**Electrical**	
5100-0053	All cab console switches (as applicable) and the (4) body mount intake switches to be LED smart switches (IPOS).	1,540.00
5110-0062	(4) rocker switches with back lighing to be provided IPO the standard toggle switches on body for the (3) main vacuum pump intake/discharge.	440.00
5310-0032	Federal Signal Signal Master Light bar. Surface mounted at rear of tank. Includes (8) LED lights with controller located in cab.	785.00
5310-0033	Whelen traffic advisor light bar. Surface mounted at rear of tank. Includes (8) LED lights with controller located in cab.	987.00
5390-0061	Rear upper tank deck/scene lights wired through chassis reverse.	78.00
5390-0062	Sides and rear upper tank deck/scene lights wired through chassis reverse.	78.00
5390-0063	(8) LED scene lighting package. Locate (3) each side of tank and (2) at rear of body/tank. All (8) lights to be wired to operate with chassis transmisson in reverse.	465.00
5400-0095	(2) additional scene lighting package. Locate lights - (1) each side of tank centered. Wired with standard work light switching.	475.00
5400-0103	Fog Lights-Qtz Halogen (PR) Amber and located front of bumper.	283.00
7000	**Loose Equipment**	
7700-0090	Adaptor, hose and strainer package. For use with vacuum pump system. For use with 3000 to 4000 gallon tanks.	2,575.00
7700-0091	Floating strainer. For use with vacuum pump system.	718.00
7700-0093	Adaptor, hose and strainer package. For use with vacuum pump system. For use with 2000 gallon tank.	2,575.00
7700-0094	Adaptor, hose and strainer package. For use with vacuum pump system. For use with 2500 gallon tank.	2,575.00
7900-0137	2000 Gallon portable folding tank. Ship with unit stored in storage tank rack.	692.00
7900-0138	2500 Gallon portable folding tank. Ship with unit stored in storage tank rack.	842.00
7900-0139	3000 Gallon portable folding tank. Ship with unit stored in storage tank rack.	956.00
7900-0140	3500 Gallon portable folding tank. Ship with unit stored in storage tank rack.	1,008.00
7900-0141	4000 Gallon portable folding tank. Ship with unit stored in storage tank rack.	1,082.00
8000	**Painting, Striping, Lettering**	
8100-0195	International paint Break 24AGM. Required with all two-tone painted International cabs.	760.00
8100-0200	International paint Break 23FGA. Required with all two-tone painted International cabs.	760.00
8200-0043	3" Scotchlite Letters (60). Includes shade and outline per letter.	1,059.00
8300-0107	4" White/Red Scotchlite stripe. Locate white on cab with bottom of stripe even with bottom of cab. The red is to be straight on the body side storage trays.	850.00
8300-0108	4" Red Scotchlite stripe. Locate red on cab with bottom of stripe even with bottom of cab and straight on the body side storage trays.	850.00

Notes:

1) Availability of options are limited by other options selected, and not all options are available in every chassis/apparatus configuration. Selection of an option may require several of the above parts/items to complete the option package.

2) Certain options, alone or in combination with other options, may require heavier axle/suspension packages, longer frames, or reinforced frames at additional cost per the above price list.

3) To configure options, the E-One State Term Schedule authorized dealer will use quote configuration software to select the components necessary to effect the option, feature, or configuration requested and quote the total option price.