TRAIL KING INDUSTRIES, INC.
OHIO STS CONTRACT #7751501509
PRICES EFFECTIVE JANUARY 15, 2015

Table of Contents ..... Page 1

60-Ton Hydraulic Detachable Gooseneck Trailer ..... Page 2

Advantage Hydraulic Sliding Tail Trailer ..... Page 9

Advantage Hydraulic Tail Trailer ..... Page 13

Advantage Plus! Hydraulic Detachable Gooseneck Trailer ..... Page 17

Advantage Plus! Hydraulic Sliding Axle Trailer ..... Page 22

Flip Axle ..... Page 27

Rollback Trailer ..... Page 30

Tag Trailer ..... Page 33

Tilt Trailer ..... Page 37

Utility and Tilt Utility Trailers ..... Page 40

ALL RIGHTS RESERVED. ©TRAIL KING INDUSTRIES, INC., 2015

TRAIL KING HYDRAULIC DETACHABLE GOOSENECK TRAILER
TK120HDG

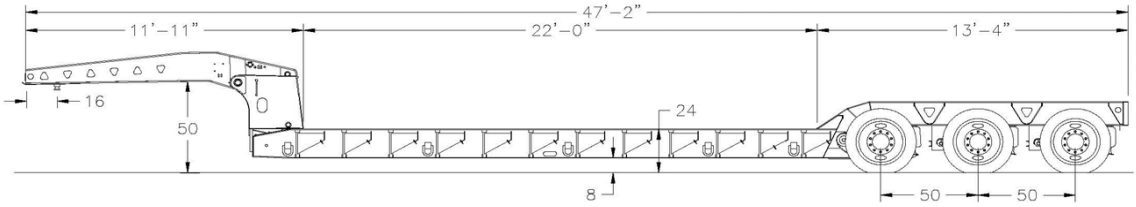

TK120HDG Hydraulic Detachable; 22' deck

STANDARD EQUIPMENT
3 - 27,000 lb. axles (3/4" wall)
16 1/2" x 7" air Brakes
8.25 x 22.5 disc wheels
Outboard 10-hole pilot mount
275/70R x 22.5 16PR radial tires (H)
Oil seals
16" kingpin setting
Hydraulic self-lifting detachable gooseneck
(can lift above or below transport positions)
Hydraulic gooseneck support arm
Air control panel - includes a liquid-filled air gauge
Air-activated, positive self-locking pin on gooseneck
Gooseneck does not require ground bearing pads for lifting
4-beam main frame construction
Automatic slack adjusters
I-beam crossmembers on 24" centers
50" loaded 5th wheel height
Mid-turn signal/clearance light
Rubber mounted sealed lights andharness system
Electrical system per DOT regulations
7-pole electrical connector
Mud flaps
Red & white conspicuity markings
Color: Trail King 2-part polyurethane

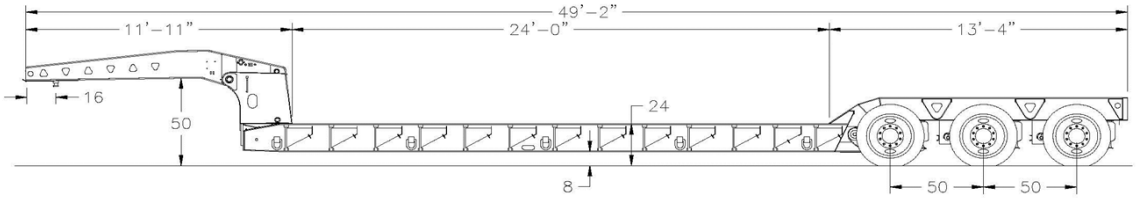

TK120HDG Hydraulic Detachable; 24' deck

STANDARD EQUIPMENT
3 - 27,000 lb. axles (3/4" wall)
16 1/2" x 7" air Brakes
8.25 x 22.5 disc wheels
Outboard 10-hole pilot mount
275/70R x 22.5 16PR radial tires (H)
Oil seals
16" kingpin setting
Hydraulic self-lifting detachable gooseneck
(can lift above or below transport positions)
Hydraulic gooseneck support arm
Air control panel - includes a liquid-filled air gauge
Air-activated, positive self-locking pin on gooseneck
Gooseneck does not require ground bearing pads for lifting
4-beam main frame construction
Automatic slack adjusters
I-beam crossmembers on 24" centers
50" loaded 5th wheel height
Mid-turn signal/clearance light
Rubber mounted sealed lights andharness system
Electrical system per DOT regulations
7-pole electrical connector
Mud flaps
Red & white conspicuity markings
Color: Trail King 2-part polyurethane

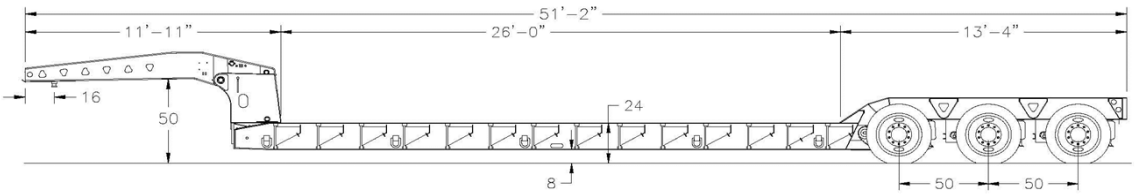

TK120HDG Hydraulic Detachable; 26' deck

STANDARD EQUIPMENT
3 - 27,000 lb. axles (3/4" wall)
16 1/2" x 7" air Brakes
8.25 x 22.5 disc wheels
Outboard 10-hole pilot mount
275/70R x 22.5 16PR radial tires (H)
Oil seals
16" kingpin setting
Hydraulic self-lifting detachable gooseneck
(can lift above or below transport positions)
Hydraulic gooseneck support arm
Air control panel - includes a liquid-filled air gauge
Air-activated, positive self-locking pin on gooseneck
Gooseneck does not require ground bearing pads for lifting
4-beam main frame construction
Automatic slack adjusters
I-beam crossmembers on 24" centers
50" loaded 5th wheel height
Mid-turn signal/clearance light
Rubber mounted sealed lights andharness system
Electrical system per DOT regulations
7-pole electrical connector
Mud flaps
Red & white conspicuity markings
Color: Trail King 2-part polyurethane

Item #	Description	Price TK120HDG
	BASE MODEL	
11522	TK120HDG Hydraulic Detachable; 22' deck, 2S1M	84,088
11523	TK120HDG Hydraulic Detachable; 22' deck, 4S2M	84,477
11524	TK120HDG Hydraulic Detachable; 24' deck, 2S1M	85,479
11525	TK120HDG Hydraulic Detachable; 24' deck, 4S2M	85,874
11526	TK120HDG Hydraulic Detachable; 22' deck, No ABS	82,259
11527	TK120HDG Hydraulic Detachable; 24' deck, No ABS	83,656
11528	TK120HDG Hydraulic Detachable; 26' deck, No ABS	85,452
11529	TK120HDG Hydraulic Detachable; 26' deck, 2S1M	87,281
11530	TK120HDG Hydraulic Detachable; 26' deck, 4S2M	87,670
	HYDRAULIC GOOSENECK	
Standard Option		
11531	12' hyd gooseneck w/ 98" swing clearance	0
Substitute Options		
11532	13' hyd gooseneck w/ 111" swing clearance (16" and 40" K.P.)	2,106
11533	18' hyd gooseneck w/ 168" swing clearance.	11,143
Additional Options		
11534	Flip option for 18' gooseneck (58" long)	2,799
11535	Additional transport doors (per pair) (specify deck height or capacity)	320
11536	Hydraulics assist for flip gooseneck	4,644

Item #	Description	Price
	5TH WHEEL HEIGHT	
Standard Option		
11537	50" 5th-wheel height	0
Substitute Options		
11538	52" 5th-wheel height	0
11539	54" 5th-wheel height	0
11540	48" 5th-wheel height	0
	KING PIN	
Additional Options		
11541	Additional kingpin settings (Ea.) (specify setting)	485
	HYDRAULICS	
Standard Option		
11542	PTO hydraulic tilt	0
Substitute Options		
11543	8 1/2 HP Kohler self-contained power unit	3,466
11544	13 HP Honda self-contained power unit (only available on trailers wider than 102")	3,482
11545	14 HP Kohler self-contained power unit	4,511
11546	16 HP Vanguard self contained unit	4,751
	DECK WIDTH	
Standard Option		
11547	102" deck width	0
Substitute Options		
11548	8’ deck width	-1,131
11549	9' deck width	1,061
	MAIN DECK	
Standard Option		
11550	24" loaded deck height; 8" ground clearance	0
Substitute Options		
11551	Drop side deck (24" center, 18" outside and 6" clearance)	1,775
Standard Option		
11552	Swing-out outriggers with planks	0
Substitute Options		
11553	Less STD 12" swingouts on 24’ load deck	-1,870
11554	Less STD 12" swingouts on 22’ load deck	-1,729
11555	Less std. 12" swing-outs on 26’ load deck	-2,015
Standard Option		
11556	Standard load deck	0
Substitute Options		
11557	Deduct for rail deck ILO Std deck TK120HDG-TK170HDG Retail Price Per Foot	-282
Standard Option		
11558	D-rings on load deck (5 pair std)	0
Substitute Options		
11559	Triangle cut-outs ILO d-rings	0
Additional Options		
11560	Additional D-rings (Ea.)	18
11561	Recessed D-rings (Ea.)	80
11562	Heavy duty swing-out outriggers (ea.) (Qty = deck length + 2)	165
11563	Double wide outriggers at front with dual outriggers in center (per pair)	491
11564	Swing-out brackets only (Ea.)	53
11565	Center loading wood ramp	832
11566	Angle style tie downs (pair)	69
11567	Knuckle trough in last 6' of load deck w/recessed header beam and MF-80 in bottom	837
11568	Keyslots (ea)	29
	DECKING	
Standard Option		
11569	1 1/2" Oak raised decking (net)	0
Substitute Options		
11570	1 3/4" Apitong raised decking (net)	1,275
	ADDITIONAL DECK LENGTHS	
Additional Options		
11571	TK120HDG per foot charge	912

Item #	Description	Price
	RAMPS	
Standard Option		
11572	No front ramp	0
Substitute Options		
11574	42" front loading ramps (steel with traction aids)	1,248
11575	31" high capacity front loading ramp	1,658
Standard Option		
11576	No rear ramp	0
Substitute Options		
11577	60" wood filled rear ramps (24" wide)	1,903
11578	72" wood filled rear loading ramps	2,703
Additional Options		
11579	Center loading steel ramp	725
	WHEEL AREA	
Standard Option		
11580	Bolster style wheel area	0
Substitute Options		
11581	Full width steel covered rear deck (does not include boom trough)	3,055
11582	Steel over wheels w/ 10 ga. bolted in bottom of boom trough	3,055
Standard Option		
11583	Formed bolster	0
Substitute Options		
11584	I-beam style bolsters (include full depth crossmembers in wheel area)	832
11585	Less bolsters between wheels	-1,072
Standard Option		
11586	Fixed wheel area with half front bolster	0
Substitute Options		
11587	Detachable wheel area with horizontal pins (adds 6" to oal) - no front bolster	6,910
11588	Detachable wheel area with horizontal pins (adds 6" to oal) - with bolt-on front bolster	9,155
11589	Detachable wheel area with vertical pins - no front bolster	5,284
11590	Detachable wheel area with vertical pins - with bolt-on front bolster	8,558
Standard Option		
11591	No beavertail	0
Substitute Options		
11592	30" beavertail (adds 13" to OAL)	1,029
Additional Options		
11593	Full height front bolster (approx. 40° angle)	720
11594	Removable tapered wheel covers (per complete axle)	1,785
11595	10 ga. floor plate bolted in bottom of boom	368
11596	Wood filled beavertail	331
11597	Lowered front crossmember in wheel area	379
11598	Removable squared wheel covers (per complete axle)	1,785
	FRAME REINFORCEMENT	
Additional Options		
11599	Frame reinforcing for flip axle	2,415
11600	Frame reinforcing for single axle booster	2,735
11601	Frame reinforcing for tandem axle booster	5,097
11602	Brackets, electrical, and air connections at rear for add'l axles	805
	HEAVY DUTY OPTION PACKAGE	
Standard Option		
11603	120,000 lbs. concentrated in 16'	0
Substitute Options		
11604	120,000 lbs. concentrated in 10' (inc. 1 3/4" apitong)	2,368
Additional Options		
11605	Top flange reinforcement	666
11606	4" stub crossmember in outer bays for crossmembers 12" O.C.	896
	SUSPENSIONS	
Standard Option		
11607	Air ride suspension	0
Additional Options		
11608	Air-ride raising and lowering valve	586

Item #	Description	Price
	AXLES	
Standard Option		
11609	No lift axle	0
Substitute Options		
11610	Air lift rear axle (w/ dual ride height-deletes spring brakes)	1,802
Additional Options		
11611	Deduct to make flip axle fixed	-1,312
11613	3rd flip axle in lieu of 3rd fixed axle (third must be on air)	2,255
11614	Deduct 3rd axle (Trailer must have air-ride)	-9,464
11618	T.P. axles (same inner & outer bearings)(avail. for 16 1/2" x 7" brakes only) (per complete axle)	304
	SUSPENSIONS/AXLES	
Additional Options		
11621	Dust Shields (per complete axle)	112
11622	Disc Brakes (inc. silent drive susp) ((per complete axle))	2,826
	AXLE SPACING	
Standard Option		
11623	50" axle spacing	0
Substitute Options		
11624	54" axle spacing (adds to OAL) Air-ride	1,162
11625	60" axle spacing (adds to OAL) Air-ride	2,309
11626	55" axle spacing (adds to OAL) Air-ride	1,162
	BRAKES / AIR	
Additional Options		
11627	Spring brakes ((per complete axle) - minimum: 2 axles)	208
	HUB / DRUM	
Standard Option		
11628	Steel hub-piloted - cast drum (per complete axle)	0
Substitute Options		
11629	Steel hub-piloted - Centrifuse drum ILO Std (per complete axle)	272
11630	Steel hub-piloted - X-30 drum ILO Std (per complete axle)	357
11631	Aluminum hub-piloted - Centrifuse drum ILO Std (per complete axle)	521
11632	Aluminum hub-piloted - X-30 drum ILO Std (per complete axle)	608
11633	Duralite hub-piloted - cast drum ILO Std (per complete axle)	128
11634	Duralite hub-piloted - Centrifuse drum ILO Std (per complete axle)	400
	WHEEL SIZE	
Standard Option		
08179	8.25 x 22.5 10-hole steel disc wheel	0
Substitute Options		
08302	8.25 x 24.5 10-hole steel disc wheel (per wheel) ILO Std 8.25 x 22.5 10-hole steel disc wheel	10
	WHEEL FINISH (INSIDE)	
Standard Option		
12849	8.25 x 22.5 10-hole steel disc wheel	0
Substitute Options		
12850	6.75 x 17.5 8-hole steel disc wheel (per wheel) ILO Std 8.25 x 22.5 10-hole steel disc wheel	29
12931	6.75 x 17.5 8-hole machined aluminum wheel (per wheel) ILO Std 8.25 x 22.5 10-hole steel disc wheel	198
12851	8.25 x 22.5 10-hole machined aluminum wheel (per wheel) Accuride ILO Std 8.25 x 22.5 10-hole steel disc	183
12852	8.25 x 24.5 10-hole steel disc wheel (per wheel) ILO Std 8.25 x 22.5 10-hole steel disc wheel	10
12853	8.25 x 24.5 10-hole machined aluminum wheel (per wheel) Accuride ILO Std 8.25 x 22.5 10-hole steel disc	209
	WHEEL FINISH (OUTSIDE)	
Standard Option		
12854	8.25 x 22.5 10-hole steel disc wheel	0
Substitute Options		
12855	6.75 x 17.5 8-hole steel disc wheel (per wheel) ILO Std 8.25 x 22.5 10-hole steel disc wheel	29
12932	6.75 x 17.5 8-hole machined aluminum wheel (per wheel) ILO Std 8.25 x 22.5 10-hole steel disc wheel	198
12933	6.75 x 17.5 8-hole polished aluminum wheel (per wheel) ILO Std 8.25 x 22.5 10-hole steel disc wheel	223
12856	8.25 x 22.5 10-hole machined aluminum wheel (per wheel) Accuride ILO Std 8.25 x 22.5 10-hole steel disc	183
12857	8.25 x 22.5 10-hole polished aluminum wheel (per wheel) Accuride ILO Std 8.25 x 22.5 10-hole steel disc	197
12858	8.25 x 24.5 10-hole steel disc wheel (per wheel) ILO Std 8.25 x 22.5 10-hole steel disc wheel	10
12859	8.25 x 24.5 10-hole machined aluminum wheel (per wheel) Accuride ILO Std 8.25 x 22.5 10-hole steel disc	209
12860	8.25 x 24.5 10-hole polished aluminum wheel (per wheel) Accuride ILO Std 8.25 x 22.5 10-hole steel disc	210
12861	8.25 x 22.5 Aluminum - Accu-Shield Polished (per wheel) ILO Std 8.25 x 22.5 10-hole steel disc wheel	302
12862	8.25 x 24.5 Aluminum - Accu-Shield -Polished (per wheel) ILO Std 8.25 x 22.5 10-hole steel disc wheel	315

Item #	Description	Price
	SPARE WHEEL	
Standard Option		
10058	No spare wheel	0
Substitute Options		
08205	6.75 x 17.5 8-hole steel disc wheel (per wheel)	158
08206	6.75 x 17.5 8-hole machined aluminum wheel (per wheel)	326
08207	6.75 x 17.5 8-hole polished aluminum wheel (per wheel)	352
08208	8.25 x 22.5 10-hole steel disc wheel (per wheel)	128
08209	8.25 x 22.5 10-hole machined aluminum wheel (per wheel) Accuride	311
08210	8.25 x 22.5 10-hole polished aluminum wheel (per wheel) Accuride	325
08211	8.25 x 24.5 10-hole steel disc wheel (per wheel)	138
08212	8.25 x 24.5 10-hole machined aluminum wheel (per wheel) Accuride	337
08213	8.25 x 24.5 10-hole polished aluminum wheel (per wheel) Accuride	338
12832	8.25 x 22.5 Aluminum - Accu-Shield Polished (per wheel)	430
12833	8.25 x 24.5 Aluminum - Accu-Shield -Polished (per wheel)	443
	TIRE SIZE	
Standard Option		
07913	275/70R22.5 - 16 ply (tire only) (per tire)	0
Substitute Options		
08135	235/75R17.5 - 18 ply HTL2 in lieu of STD 275/70R22.5 - 16 ply (per tire)	-162
08153	11R22.5 - 14 ply in lieu of STD 275/70R22.5 - 16 ply (per tire)	-68
	ALTERNATIVE TIRE BRAND	
Additional Options		
08036	Michelin 235/75R17.5 - 16 ply XTE2 in lieu of STD 275/70R22.5 - 16 ply (per tire)	-1
08049	Michelin 275/70R22.5 - 18 ply XTY-2 in lieu of STD 275/70R22.5 - 16 ply (per tire)	187
08064	Goodyear 275/70R22.5 - 16 ply G661 HSA in lieu of STD 275/70R22.5 - 16 ply (per tire)	34
08082	Bridgestone 275/70R22.5 - 18 ply R250ED in lieu of STD 275/70R22.5 - 16 ply (per tire)	155
08092	General 11R22.5 - GRABBER 16 ply in lieu of STD 275/70R22.5 - 16 ply (per tire)	114
08097	General 11R24.5 - GRABBER 16 ply in lieu of STD 275/70R22.5 - 16 ply (per tire)	109
08102	General 11R22.5 - 16 ply S371 in lieu of STD 275/70R22.5 - 16 ply (per tire)	1
08107	General 11R24.5 - 16 ply S371 in lieu of STD 275/70R22.5 - 16 ply (per tire)	-71
	SPARE TIRES	
Additional Options		
08112	255/70R22.5 - 16 ply (tire only) (per tire)	449
08113	275/70R22.5 - 16 ply (tire only) (per tire)	510
08114	11R22.5 - 14 ply (tire only) (per tire)	442
08117	Michelin 255/70R22.5 - 16 ply XZE (tire only) (per tire)	554
08118	Michelin 275/70R22.5 - 18 ply XTY-2 (tire only) (per tire)	696
08121	Goodyear 255/70R22.5 - 16 ply G661 HSA (tire only) (per tire)	444
08122	Goodyear 275/70R22.5 - 16 ply G661 HSA (tire only) (per tire)	544
08125	Bridgestone 255/70R22.5 - 16 ply R197 Ecopia (tire only) (per tire)	403
08126	Bridgestone 275/70R22.5 - 18 ply R250ED (tire only) (per tire)	665
08127	Yokohama 255/70R22.5 - 16 ply RY023 (tire only) (per tire)	448
08128	General 11R22.5 - GRABBER 16 ply (tire only) (per tire)	624
08129	General 11R24.5 - GRABBER 16 ply (tire only) (per tire)	619
08131	General 11R24.5 - 16 ply S371 (tire only) (per tire)	439
	ELECTRICAL	
Additional Options		
11635	4-pole electrical socket at rear wired to clearance light	69
12353	Wiring required for electric/hydraulic power unit on Hydraulic Booster	865

Item #	Description	Price
	LIGHTS	
Standard Option		
11636	Incandescent lights	0
Substitute Options		
11637	LED light package (5th-wheel trailers)	597
Additional Options		
11638	Side Clearance Lights / Pair	101
11639	Mid-turn signal (per pair)	128
11640	3rd Tail Light Package	128
11641	Remote flasher w/ battery back-up	331
11642	One pair of 4" round amber strobes at rear w/ on/ off switch wired to blue wire	453
11643	Strobe light mounted on pedestal	341
11644	Revolving lights ILO strobe	59
	FLAPS, MUD GUARDS & FENDERS	
Additional Options		
11645	Fenders for 12' or 13' gooseneck	1,456
	MISCELLANEOUS	
Additional Options		
11646	Flag holders (per pr.)	75
11647	Stainless steel insert in tail channel	65
11648	Brackets only for Removable oversized load sign	128
11649	Removable oversized load sign (includes. signage)	347
08569	DOT Inspection	147
	PAINT	
Standard Option		
06027	S7211 Maroon w/ white decals (43-7-009)	0
08024	Black S7203 with white decals (735-432-039)	0
08025	Hertz Yellow S7239 with black decals (735-434-016)	0
08026	New CAT Yellow S7225 with black decals (735-434-018)	0
08027	Off White S7222 with black decals (735-431-016)	0
08028	White S7235with black decals (735-431-012)	0
08029	Bright White with black decals (735-481-053)	0
08030	IH Red S7205 with white decals (735-437-010)	0
08031	Grey S7230 with black decals (735-489-029)	0
08032	Dark Grey S7265 with white decals (735-439-014)	0
Additional Options		
01080	Non-Metallic color match paint upcharge for 5th wheel trailers	997
01081	Metallic color match paint upcharge for 5th wheel trailers	1,605
06861	Code A - Optional Paint - 5th wheel rollbacks thru TK120HDG	336
06862	Code B - Optional Paint - 5th wheel rollbacks thru TK120HDG	453
06863	Code C - Optional Paint - 5th wheel rollbacks thru TK120HDG	581
06864	Code D - Optional Paint - 5th wheel rollbacks thru TK120HDG	704
06865	Code E - Optional Paint - 5th wheel rollbacks thru TK120HDG	816
06866	Code F - Optional Paint - 5th wheel rollbacks thru TK120HDG	938

CAPACITY RATINGS ARE FRAME CAPACITIES ONLY. ACTUAL LOAD CAPACITIES MAY BE RESTRICTED BY FACTORS SUCH AS GROSS AXLE WEIGHT RATINGS (GAWR) OR STATE AND FEDERAL REGULATIONS.
FEDERAL RETAIL EXCISE TAX MUST BE FIGURED ON THE SELLING PRICE WHEN SELLING TO A NON-EXEMPT END USER.

EFFECTIVE 1/15/15.

TRAIL KING CONSTRUCTION DIVISION

ALL RIGHTS RESERVED. TRAIL KING INDUSTRIES, INC., 2015

TRAIL KING HYDRAULIC SLIDING TAIL TRAILER
"ADVANTAGE" SERIES

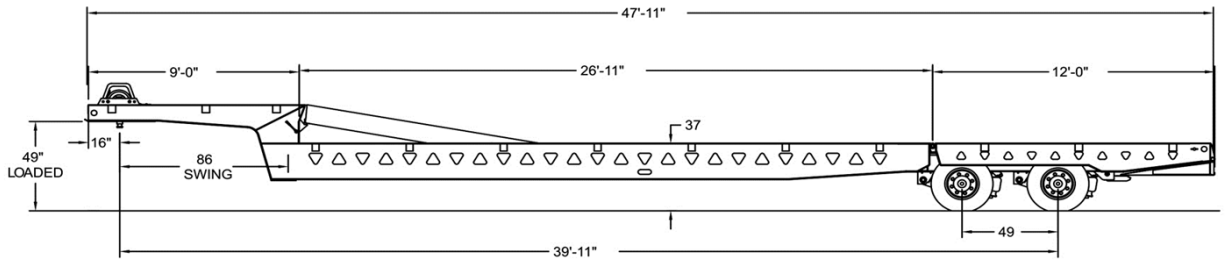

TK80HST 2-axle Advantage Hydraulic Sliding Tail

10943 - STANDARD EQUIPMENT
Capacity: 80,000 lbs uniform / 50,000 lbs in 10 ft.
47' 11" Overall Length
102" wide
49" loaded 5th wheel height
Single drop deck
10' Hydraulic recessed ramp to upper deck (10°)
15' 10" hydraulic tail with 48" fold-under,
10° load angle (with 235/75R 17.5 tires)
Heavy duty I-beam style tail hinge beam
Stainless steel hinge pins on main tail and fold-under
Tail raises to 58" dock height and lowers to ground
Hydraulic sliding axles
No traveling hydraulic lines for sliding axle operation
Air and electrical lines contained in protective track
6.75 X 17.5 8-hole hub piloted wheels
Air Ride suspension with raising and lowering
Raising and lowering switch on each side of upper deck
10 ga floor plate decking on upper deck
100,000/80,000 psi yield strength steel construction
49" axle spacing
25,000 lb axles (5/8" wall)
4S2M ABS Brakes
Automatic slack adjusters
One-piece oil seals
pro tork axle nuts
80' winch cable with locking safety hook
Dual Hydraulic controls (each side)
Ramp lock handles on each side of upper deck
2 tool boxes at front of upper deck
Five pair of Vertical supports inside fold under
LED lights, 50 state legal
Three tail lights per side (Amber in center)
Electrical system per DOT regulations
Midturn signal Clearance lights
Rubber mounted sealed lights with sealed harness system
Mud flaps
Red & white conspicuity markings
Paint: Trail King 2-part polyurethane

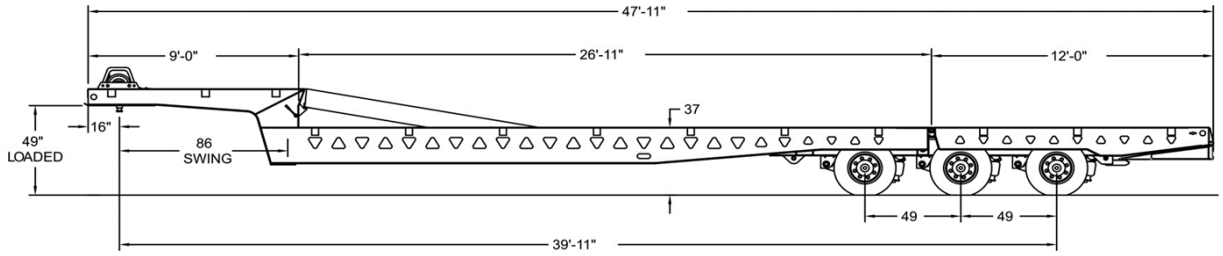

TK80HST 3-axle Advantage Hydraulic Sliding Tail

10944 - STANDARD EQUIPMENT
Capacity: 80,000 lbs uniform / 50,000 lbs in 10 ft.
47' 11" Overall Length
102" wide
49" loaded 5th wheel height
Single drop deck
10' Hydraulic recessed ramp to upper deck (10°)
15' 10" hydraulic tail with 48" fold-under,
10° load angle (with 235/75R 17.5 tires)
Heavy duty I-beam style tail hinge beam
Stainless steel hinge pins on main tail and fold-under
Tail raises to 58" dock height and lowers to ground
Hydraulic sliding axles
No traveling hydraulic lines for sliding axle operation
Air and electrical lines contained in protective track
6.75 X 17.5 8-hole hub piloted wheels
Air Ride suspension with raising and lowering
Raising and lowering switch on each side of upper deck
10 ga floor plate decking on upper deck
100,000/80,000 psi yield strength steel construction
49" axle spacing
25,000 lb axles (5/8" wall)
4S2M ABS Brakes
Automatic slack adjusters
One-piece oil seals
pro tork axle nuts
80' winch cable with locking safety hook
Dual Hydraulic controls (each side)
Ramp lock handles on each side of upper deck
2 tool boxes at front of upper deck
Five pair of Vertical supports inside fold under
LED lights, 50 state legal
Three tail lights per side (Amber in center)
Electrical system per DOT regulations
Midturn signal Clearance lights
Rubber mounted sealed lights with sealed harness system
Mud flaps
Red & white conspicuity markings
Paint: Trail King 2-part polyurethane

Item #	Description	Price	
		TK80HST 2-AXLE	TK80HST 3-AXLE
10943	TK80HST 2-axle Advantage Hydraulic Sliding Tail	84,815	
10944	TK80HST 3-axle Advantage Hydraulic Sliding Tail		92,219
	UPPER DECK		
Standard Option			
10945	9'0" Straight drop upper deck (16" kingpin setting with 86" swing clearance)	0	0
Substitute Options			
10946	10'0" straight drop upper deck (16" pin setting / 98" swing clearance) (47'11" OAL)	272	272
	WINCH		
Standard Option			
10947	20,000 lb. hydraulic winch with level wind (mounted above king pin)	0	0
Standard Option			
10950	Winch Guard	0	0
Substitute Options			
10951	Delete Winch guard	-338	-338
Additional Options			
10949	Winch roller (Recessed at rear of upper deck)	367	367
	HYDRAULICS & CONTROLS		
Standard Option			
10952	Wireless Remote for winch (1 functions, 2 buttons)	0	0
Substitute Options			
10953	Wireless remote, full (4 functions, 8 buttons)	2,456	2,456
	HYDRAULICS		
Standard Option			
10954	PTO hydraulic tilt	0	0
Substitute Options			
10955	24 HP Honda SCU with cover (mounted above winch)	5,575	5,575
	LANDING GEAR		
Standard Option			
10956	Pin-type park stands	0	0
Substitute Options			
10957	2-speed park stands ILO std (crank curb side)	162	162
	DECKING, MAIN DECK		
Standard Option			
10958	1 3/8" (NET) apitong deck raised (deck and upper deck ramp)	0	0
Substitute Options			
10959	1 1/8" (NET) apitong deck flush (deck and upper deck ramp)	-239	-239
	TIE DOWNS		
Standard Option			
10960	External stake pockets on 48" centers alternating with internal key slots for a tie down every 24"	0	0
Substitute Options			
10961	Delete stake pockets, internal keyslots will be 24" OC where possible	-192	-192
Standard Option			
10962	Triangle Cutouts	0	0
Substitute Options			
10963	Delete Triangle cutouts	-81	-81
Additional Options			
10964	Add exterior bent d-rings on 48" centers	517	517
10965	Add recessed d-rings on 48" centers	1,479	1,479
	DECKING, TAIL		
Standard Option			
10967	Star Traction over steel	0	0
Substitute Options			
10968	Flush 1 3/8" apitong decking	-1,415	-1,415
	DECKING, FOLD UNDER APPROACH		
Standard Option			
10970	Star Traction over steel	0	0
Substitute Options			
10971	3/16" floor plate	-105	-105
	BRAKES		
Standard Option			
10972	Drum style, 12.25 X 7.5 931-162 lining	0	0
Substitute Options			
10974	Disc Brakes (3 axles)		10,452

Item #	Description	Price	
		TK80HST 2-AXLE	TK80HST 3-AXLE
	WHEEL FINISH (INSIDE)		
Standard Option			
08182	6.75 x 17.5 8-hole steel disc wheel	0	0
Substitute Options			
08183	6.75 x 17.5 8-hole machined aluminum wheel (per wheel) ILO Std 6.75 x 17.5 8-hole steel disc wheel	168	168
	WHEEL FINISH (OUTSIDE)		
Standard Option			
08192	6.75 x 17.5 8-hole steel disc wheel	0	0
Substitute Options			
08193	6.75 x 17.5 8-hole machined aluminum wheel (per wheel) ILO Std 6.75 x 17.5 8-hole steel disc wheel	168	168
08194	6.75 x 17.5 8-hole polished aluminum wheel (per wheel) ILO Std 6.75 x 17.5 8-hole steel disc wheel	194	194
	SPARE WHEEL		
Standard Option			
10058	No spare wheel	0	0
Substitute Options			
08205	6.75 x 17.5 8-hole steel disc wheel (per wheel)	158	158
08206	6.75 x 17.5 8-hole machined aluminum wheel (per wheel)	326	326
08207	6.75 x 17.5 8-hole polished aluminum wheel (per wheel)	352	352
	TIRE SIZE		
Standard Option			
07907	235/75R17.5 - 18 ply HTL2 (tire only) (per tire)	0	0
Substitute Options			
13038	245/70R17.5 - 18 ply in lieu of STD 235/75R17.5 - 18 ply HTL2 (per tire)	5	5
	ALTERNATIVE TIRE BRAND		
Additional Options			
08033	Michelin 235/75R17.5 - 18 ply HTL2 XTE2 in lieu of STD 235/75R17.5 - 18 ply HTL2 (per tire)	125	125
08037	Michelin 245/70R17.5 - 16 ply XTA in lieu of STD 235/75R17.5 - 18 ply HTL2 (per tire)	111	111
08066	Goodyear 245/70R17.5 - 16 ply in lieu of STD 235/75R17.5 - 18 ply HTL2 (per tire)	135	135
08070	Bridgestone 245/70R17.5 - 16 ply R184 in lieu of STD 235/75R17.5 - 18 ply HTL2 (per tire)	157	157
13037	Continental 245/70R17.5 18 ply HTL2 in lieu of STD 235/75R17.5 - 18 ply HTL2 (per tire)	5	5
	SPARE TIRES		
Standard Option			
10059	No spare tire	0	0
Substitute Options			
08110	235/75R17.5 - 18 ply HTL2 (tire only) (per tire)	347	347
08115	Michelin 235/75R17.5 - 16 ply XTE2 (tire only) (per tire)	472	472
08116	Michelin 245/70R17.5 - 16 ply XTA (tire only) (per tire)	459	459
08123	Goodyear 245/70R17.5 - 16 ply (tire only) (per tire)	483	483
08124	Bridgestone 245/70R17.5 - 16 ply R184 (tire only) (per tire)	505	505
13036	Continental 245/70R17.5 18 ply HTL2 (tire only) (per tire)	353	353
	LIGHTS / ELECTRICAL		
Standard Option			
10975	3rd Tail Light Package	0	0
Substitute Options			
10976	One pair of 4" round amber strobes (with switch) at rear in lieu of 3rd tail light	309	309
Additional Options			
10977	4-pole female electrical socket in light channel wired to clearance light	49	49
10978	Recessed working LED lights in GN drop w/ switch (per pair)	524	524
	MISCELLANEOUS		
Additional Options			
10979	Flag holders (4)	131	131
10980	Hubodometer	172	172
10981	Air Weigh system (per Advantage HST axle group)	1,202	1,202
10982	PSI Tire Inflation System (2 axle)	1,245	
10983	Cat's Eye Tire Equalization System (2 axle)	468	
10984	Cross-Fire Tire Equalization System (2 axle)	441	
10985	PSI Tire Inflation System (3 axle)		1,583
10986	Cat's Eye Tire Equalization System (3 axle)		828
10987	Cross-Fire Tire Equalization System (3 axle)		661
08569	DOT Inspection	147	147

Item #	Description	Price	
		TK80HST 2-AXLE	TK80HST 3-AXLE
	PAINT		
Standard Option			
06027	S7211 Maroon w/ white decals (43-7-009)	0	0
08024	Black S7203 with white decals (735-432-039)	0	0
08025	Hertz Yellow S7239 with black decals (735-434-016)	0	0
08026	New CAT Yellow S7225 with black decals (735-434-018)	0	0
08027	Off White S7222 with black decals (735-431-016)	0	0
08028	White S7235with black decals (735-431-012)	0	0
08029	Bright White with black decals (735-481-053)	0	0
08030	IH Red S7205 with white decals (735-437-010)	0	0
08031	Grey S7230 with black decals (735-489-029)	0	0
08032	Dark Grey S7265 with white decals (735-439-014)	0	0
Additional Options			
01080	Non-Metallic color match paint upcharge for 5th wheel trailers	997	997
01081	Metallic color match paint upcharge for 5th wheel trailers	1,605	1,605
06861	Code A - Optional Paint - 5th wheel rollbacks thru TK120HDG	336	336
06862	Code B - Optional Paint - 5th wheel rollbacks thru TK120HDG	453	453
06863	Code C - Optional Paint - 5th wheel rollbacks thru TK120HDG	581	581
06864	Code D - Optional Paint - 5th wheel rollbacks thru TK120HDG	704	704
06865	Code E - Optional Paint - 5th wheel rollbacks thru TK120HDG	816	816
06866	Code F - Optional Paint - 5th wheel rollbacks thru TK120HDG	938	938

* To meet 1997 federal requirements, Trail King offers two variations of the anti-lock braking system.
The minimum 2S1M system is available, but Trail King recommends the 4S2M system.

CAPACITY RATINGS ARE FRAME CAPACITIES ONLY. ACTUAL LOAD CAPACITIES MAY BE RESTRICTED BY FACTORS SUCH AS GROSS AXLE WEIGHT RATINGS (GAWR) OR STATE AND FEDERAL REGULATIONS.
FEDERAL RETAIL EXCISE TAX MUST BE FIGURED ON THE SELLING PRICE WHEN SELLING TO A NON-EXEMPT END USER.

EFFECTIVE 1/15/15.

TRAIL KING CONSTRUCTION DIVISION

ALL RIGHTS RESERVED. TRAIL KING INDUSTRIES, INC., 2015

TRAIL KING HYDRAULIC TAIL TRAILER
"ADVANTAGE" SERIES

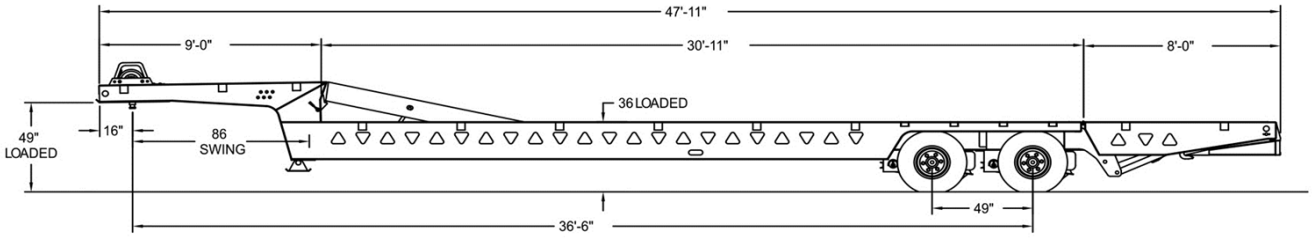

TK80HT Advantage Series Hydraulic Tail Trailer

10833 - STANDARD EQUIPMENT
Capacity: 80,000 lbs uniform / 50,000 lbs in 10 ft.
47'11" Overall Length
102" wide
36" loaded deck height (with 17.5 tires)
38½" loaded deck height (with 22.5 tires)
49" loaded 5th wheel height
11'10" hydraulic tail with 46" fold-under, 14° load angle
Stainless steel hinge pins on main tail and fold-under
Tail raises to 58" dock height and lowers to ground
Hydraulic actuated tail lock
Air Ride suspension
Air Ride lowering with switch on upper deck
10-ga. floor plate decking on upper deck
8" and 10" crossmembers on 12" centers
100,000/80,000 psi yield strength steel construction
Vertical supports inside fold under
49" axle spacing

4S2M ABS Brakes
(2) 25,000 lb axles (5/8" wall)
Automatic slack adjusters
Steel hub-piloted - cast drum
One-piece oil seals
pro tork axle nuts
80' winch cable with locking safety hook
Dual Hydraulic controls (each side)
2 tool boxes at front of upper deck
LED lights, 50 state legal
Three tail lights per side (Amber in center)
Electrical system per DOT regulations
Midturn signal Clearance lights
Rubber-mounted sealed lights with sealed harness system
Mud flaps
Red & white conspicuity markings
Paint: Trail King 2 part polyurethane

Item #	Description	Price
	BASE MODEL	
10833	TK80HT Advantage Series Hydraulic Tail Trailer	70,888
	UPPER DECK	
Standard Option		
10834	9'0" Straight drop upper deck (16" kingpin setting with 86" swing clearance)	0
Substitute Options		
10835	10'0" straight drop upper deck (16" pin setting / 98" swing clearance)	174
10836	8'0" with 45° slope, (16" pin setting / 86" swing clearance) requires"No Hydraulic Ramp"	-3,027
	UPPER DECK RAMP	
Standard Option		
10837	8' Hyd. recessed upper deck ramp (12" less than deck width)	0
Substitute Options		
10838	Delete hydraulic upper deck ramp (included with 45° slope)	0
	WINCH	
Standard Option		
10839	12,000 lb. hydraulic winch with level wind (mounted above king pin)	0
Substitute Options		
10840	20,000 lb. hydraulic winch ILO standard mounted above king pin	2,354
Standard Option		
10878	Winch guard	0
Substitute Options		
10841	Delete Winch guard	-364
Additional Options		
10842	Winch roller (Recessed at rear of upper deck)	371
	HYDRAULICS & CONTROLS	
Standard Option		
10868	Wireless Remote for winch (1 functions, 2 buttons)	0
Substitute Options		
10869	Wireless remote, full (6 functions, 12 buttons)	3,681

Item #	Description	Price
	HYDRAULICS	
Standard Option		
10843	PTO hydraulic tilt	0
Substitute Options		
10844	24 HP Honda SCU with cover (mounted above winch)	5,638
	LANDING GEAR	
Standard Option		
10845	Pin-type park stands	0
Substitute Options		
10846	2-speed park stands ILO std (crank curb side)	163
	MAIN DECK	
Standard Option		
10847	Single drop deck	0
Substitute Options		
10848	Double drop deck, 6" drop approx 10° angle	5,420
	DECKING, MAIN DECK	
Standard Option		
10849	1 3/8" (NET) apitong deck raised w/ 1/4" floor plate over wheels	0
	TIE DOWNS	
Standard Option		
10851	External stake pockets on 48" centers alternating with internal key slots for a tie down every 24"	0
Substitute Options		
10852	Delete stake pockets, internal keyslots will be 24" OC where possible	-199
Standard Option		
10941	Triangle cut-outs	0
Substitute Options		
10942	Delete triangle cut-outs	-82
Additional Options		
10854	Add exterior bent d-rings on 48" centers	493
10855	Add recessed d-rings on 48" centers	1,643
10856	Add chain stops (between stake pockets on 48" centers)	328
	DECKING, TAIL	
Standard Option		
10857	Star Traction over steel w/Star Traction over last 3' of wheel covers also	0
Substitute Options		
10858	Flush 1 3/8" apitong decking	-1,013
10859	Star Traction outside 28" over 10 ga MF80, flush apitong inner	-253
10860	Traction Aids outside 28" over 3/16" floor plate, flush apitong inner	-358
10861	Traction Aids outside 28" over full width 3/16" floor plate	-224
	DECKING, FOLD UNDER APPROACH	
Standard Option		
10862	Star Traction over steel	0
Substitute Options		
10863	1/4" floor plate	-251
	BRAKES	
Standard Option		
10870	Drum style, 12.25 X 7.5 931-162 lining	0
Substitute Options		
10871	Disc Brakes (22.5 wheels only)	6,017
12716	Drum style, 16.5 x 7 (included in Tire and Wheel Size option #10880)	0
	TIRE & WHEEL SIZE	
Standard Option		
10879	235/75R x 17.5 Tires with 6.75 x 17.5 8-hole disc wheels, 36" deck height (per trailer)	0
Substitute Options		
10880	255/70R x 22.5 Tires with 7.50 x 22.5 10-hole disc wheels, 38 1/2" deck height (per trailer)	732
	WHEEL FINISH (INSIDE)	
Standard Option		
08182	6.75 x 17.5 8-hole steel disc wheel	0
Substitute Options		
08183	6.75 x 17.5 8-hole machined aluminum wheel (per wheel) ILO Std 6.75 x 17.5 8-hole steel disc wheel	168
13220	7.50 x 22.5 10-hole steel disc wheel (per wheel) ILO Std 6.75 x 17.5 8-hole steel disc wheel	0
08842	7.50 x 22.5 machined aluminum (per wheel) ILO Std 6.75 x 17.5 8-hole steel disc wheel	208

Item #	Description	Price
	WHEEL FINISH (OUTSIDE)	
Standard Option		
08192	6.75 x 17.5 8-hole steel disc wheel	0
Substitute Options		
08193	6.75 x 17.5 8-hole machined aluminum wheel (per wheel) ILO Std 6.75 x 17.5 8-hole steel disc wheel	168
08194	6.75 x 17.5 8-hole polished aluminum wheel (per wheel) ILO Std 6.75 x 17.5 8-hole steel disc wheel	194
13221	7.50 x 22.5 10-hole steel disc wheel (per wheel) ILO Std 6.75 x 17.5 8-hole steel disc wheel	0
08843	7.50 x 22.5 machined aluminum (per wheel) ILO Std 6.75 x 17.5 8-hole steel disc wheel	208
08844	7.50 x 22.5 polished aluminum (per wheel) ILO Std 6.75 x 17.5 8-hole steel disc wheel	249
	SPARE WHEEL	
Standard Option		
10058	No spare wheel	0
Substitute Options		
08205	6.75 x 17.5 8-hole steel disc wheel (per wheel)	158
08206	6.75 x 17.5 8-hole machined aluminum wheel (per wheel)	326
08207	6.75 x 17.5 8-hole polished aluminum wheel (per wheel)	352
08845	7.50 x 22.5 10-hole steel disc wheel (per wheel)	199
08846	7.50 x 22.5 machined aluminum (per wheel)	366
08847	7.50 x 22.5 polished aluminum (per wheel)	407
	ALTERNATIVE TIRE BRAND	
Additional Options		
08033	Michelin 235/75R17.5 - 18 ply HTL2 XTE2 in lieu of STD 235/75R17.5 - 18 ply HTL2 (per tire)	125
08039	Michelin 245/70R17.5 - 16 ply XTA in lieu of STD 255/70R22.5 - 16 ply (per tire)	46
08041	Michelin 255/70R22.5 - 16 ply XZE in lieu of STD 235/75R17.5 - 18 ply HTL2 (per tire)	206
08052	Goodyear 215/75R17.5 - 16 ply G114 in lieu of STD 235/75R17.5 - 18 ply HTL2 (per tire)	11
08056	Goodyear 255/70R22.5 - 16 ply G661 HSA in lieu of STD 235/75R17.5 - 18 ply HTL2 (per tire)	97
08066	Goodyear 245/70R17.5 - 16 ply in lieu of STD 235/75R17.5 - 18 ply HTL2 (per tire)	135
08070	Bridgestone 245/70R17.5 - 16 ply R184 in lieu of STD 235/75R17.5 - 18 ply HTL2 (per tire)	157
08074	Bridgestone 255/70R22.5 - 16 ply R197 Ecopia in lieu of STD 235/75R17.5 - 18 ply HTL2 (per tire)	55
13037	Continental 245/70R17.5 18 ply HTL2 in lieu of STD 235/75R17.5 - 18 ply HTL2 (per tire)	5
08084	Yokohama 255/70R22.5 - 16 ply RY023 in lieu of STD 235/75R17.5 - 18 ply HTL2 (per tire)	101
	SPARE TIRES	
Standard Option		
10059	No spare tire	0
Substitute Options		
08110	235/75R17.5 - 18 ply HTL2 (tire only) (per tire)	347
08112	255/70R22.5 - 16 ply (tire only) (per tire)	449
08113	275/70R22.5 - 16 ply (tire only) (per tire)	510
08115	Michelin 235/75R17.5 - 16 ply XTE2 (tire only) (per tire)	472
08116	Michelin 245/70R17.5 - 16 ply XTA (tire only) (per tire)	459
08117	Michelin 255/70R22.5 - 16 ply XZE (tire only) (per tire)	554
08121	Goodyear 255/70R22.5 - 16 ply G661 HSA (tire only) (per tire)	444
08123	Goodyear 245/70R17.5 - 16 ply (tire only) (per tire)	483
08124	Bridgestone 245/70R17.5 - 16 ply R184 (tire only) (per tire)	505
08125	Bridgestone 255/70R22.5 - 16 ply R197 Ecopia (tire only) (per tire)	403
13036	Continental 245/70R17.5 18 ply HTL2 (tire only) (per tire)	353
08127	Yokohama 255/70R22.5 - 16 ply RY023 (tire only) (per tire)	448
	LIGHTS / ELECTRICAL	
Standard Option		
10864	3rd Tail Light Package	0
Substitute Options		
10865	One pair of 4" round amber strobes (with switch) at rear in lieu of 3rd tail light	312
Additional Options		
10866	4-pole female electrical at rear, road side, wired to clearance light	50
10867	Recessed working LED lights in GN drop w/ switch (per pair)	530
	MISCELLANEOUS	
Additional Options		
10872	Flag holders (4)	133
10873	Hubodometer	189
10874	Air Weigh system (per Advantage HT axle group)	1,011
10875	PSI Tire Inflation System (2 axle)	1,228
10876	Cat's Eye Tire Equalization System (2 axle)	473
10877	Cross-Fire Tire Equalization System (2 axle)	446
08569	DOT Inspection	147

Item #	Description	Price
	PAINT	
Standard Option		
06027	S7211 Maroon w/ white decals (43-7-009)	0
08024	Black S7203 with white decals (735-432-039)	0
08025	Hertz Yellow S7239 with black decals (735-434-016)	0
08026	New CAT Yellow S7225 with black decals (735-434-018)	0
08027	Off White S7222 with black decals (735-431-016)	0
08028	White S7235with black decals (735-431-012)	0
08029	Bright White with black decals (735-481-053)	0
08030	IH Red S7205 with white decals (735-437-010)	0
08031	Grey S7230 with black decals (735-489-029)	0
08032	Dark Grey S7265 with white decals (735-439-014)	0
Additional Options		
01080	Non-Metallic color match paint upcharge for 5th wheel trailers	997
01081	Metallic color match paint upcharge for 5th wheel trailers	1,605
06861	Code A - Optional Paint - 5th wheel rollbacks thru TK120HDG	336
06862	Code B - Optional Paint - 5th wheel rollbacks thru TK120HDG	453
06863	Code C - Optional Paint - 5th wheel rollbacks thru TK120HDG	581
06864	Code D - Optional Paint - 5th wheel rollbacks thru TK120HDG	704
06865	Code E - Optional Paint - 5th wheel rollbacks thru TK120HDG	816
06866	Code F - Optional Paint - 5th wheel rollbacks thru TK120HDG	938

* To meet 1997 federal requirements, Trail King offers two variations of the anti-lock braking system.
The minimum 2S1M system is available, but Trail King recommends the 4S2M system.

CAPACITY RATINGS ARE FRAME CAPACITIES ONLY. ACTUAL LOAD CAPACITIES MAY BE RESTRICTED BY FACTORS SUCH AS GROSS AXLE WEIGHT RATINGS (GAWR) OR STATE AND FEDERAL REGULATIONS.
FEDERAL RETAIL EXCISE TAX MUST BE FIGURED ON THE SELLING PRICE WHEN SELLING TO A NON-EXEMPT END USER.

EFFECTIVE 1/15/15.

TRAIL KING CONSTRUCTION DIVISION

ALL RIGHTS RESERVED. TRAIL KING INDUSTRIES, INC., 2015

TRAIL KING HYDRAULIC DETACHABLE GOOSENECK TRAILER
"ADVANTAGE PLUS" SERIES

TK70HDG Advantage Plus Hydraulic Detachable

10001 - STANDARD EQUIPMENT
70,000 lbs. concentrated in 12'
16" Kingpin setting / 50" loaded 5th wheel height
5-position gooseneck height adjustment +/- 3"
Gooseneck arched for increased truck fender clearance
Hydraulic self-lifting detachable gooseneck
(can lift above or below transport positions)
Hydraulic gooseneck support arm
Air-activated, positive self-locking pin
Gooseneck doesn't require ground bearing pads
14 bent-style D-rings on deck, 2 D-rings on wheel area
31" front loading ramps (1 pair)
4-beam main frame construction
10" I beam crossmembers on 24" centers
4" stub crossmembers for 12" centers in outer bays
Swing-out outriggers with planks
Pullout HD outrigger at front, double swing-outs at center
Lowered front cross members in wheel area
Full depth boom trough in wheel area
Boom trough covered with 10ga. steel
Triangle cut-outs on deck beams and bolster
Knuckle trough at rear of deck. 72" long, covered with 1/4" steelMud flaps
Flag holders, front of deck and rear of trailer
Wide load sign brackets
Rubber mounted sealed lights and harness system
LED Light package (50-state legal)
3 Tail lights per side (amber in center)
Electrical system per DOT regulations
Air, electrical, and hydraulics installed after paint
7-pole electrical connector
Air ride suspension
Raising/lowering air control panel
16 1/2" x 7" air brakes
4S2M Anti-lock brakes
8.25 x 22.5 10-hole disc wheel
Automatic slack adjusters
One-piece oil seals
Red & white conspicuity markings
Blasted prior to paint
Color: Trail King 2-part polyurethane

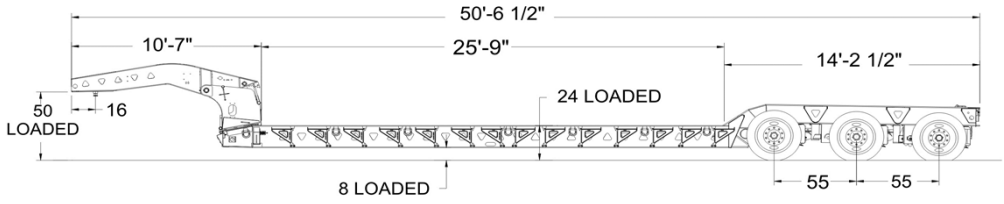

TK102HDG Advantage Plus Hydraulic Detachable

10002 - STANDARD EQUIPMENT
102,000 lbs. concentrated in 12'
16" Kingpin setting / 50" loaded 5th wheel height
5-position gooseneck height adjustment +/- 3"
Gooseneck arched for increased truck fender clearance
Hydraulic self-lifting detachable gooseneck
(can lift above or below transport positions)
Hydraulic gooseneck support arm
Air-activated, positive self-locking pin
Gooseneck doesn't require ground bearing pads
31" front loading ramps (1 pair)
4-beam main frame construction
1-3/4" Apitong decking (raised)
10" I beam crossmembers on 24" centers
4" stub crossmembers for 12" centers in outer bays
Swing-out outriggers with planks
Pullout HD outrigger at front, double swing-outs at center
Knuckle trough at rear of deck. 72" long, covered with 1/4" steel
3rd axle air lift
Lowered front cross members in wheel area
Full depth boom trough in wheel area
Boom trough covered with 10ga. steel
Mud flaps
Flag holders, front of deck and rear of trailer
Wide load sign brackets
Triangle cut-outs on deck beams and bolster
14 bent-style D-rings on deck, 2 D-rings on wheel area
Rubber mounted sealed lights and harness system
LED Light package (50-state legal)
3 Tail lights per side (amber in center)
Electrical system per DOT regulations
Air, electrical, and hydraulics installed after paint
7-pole electrical connector
Air ride suspension
Adjustable ride height
Raising/lowering air control panel
16 1/2" x 7" air brakes
8.25 x 22.5 10-hole disc wheel
Automatic slack adjusters
One-piece oil seals
Red & white conspicuity markings
Blasted prior to paint
Color: Trail King 2-part polyurethane

TK110HDG Advantage Plus Hydraulic Detachable

10003 - STANDARD EQUIPMENT
110,000 lbs. concentrated in 12'
Frame reinforced for single axle booster or flip axle
16" Kingpin setting / 50" loaded 5th wheel height
5-position gooseneck height adjustment +/- 4"
Gooseneck arched for increased truck fender clearance
Hydraulic self-lifting detachable gooseneck
(can lift above or below transport positions)
Hydraulic gooseneck support arm
Air-activated, positive self-locking pin
Gooseneck doesn't require ground bearing pads
31" front loading ramps (1 pair)
4-beam main frame construction
1-3/4" Apitong decking (raised)
10" I beam crossmembers on 24" centers
4" stub crossmembers for 12" centers in outer bays
Swing-out outriggers with planks
Pullout HD outrigger at front, double swing-outs at center
Knuckle trough at rear of deck. 72" long, covered with 1/4" steel
3rd axle air lift
Lowered front cross members in wheel area
Full depth boom trough in wheel area
Boom trough covered with 10ga. steel

Mud flaps
Flag holders, front of deck and rear of trailer
Wide load sign brackets
Triangle cut-outs on deck beams and bolster
14 bent-style D-rings on deck, 2 D-rings on wheel area
Brackets, air and electrical for single axle booster/flip
Rubber mounted sealed lights and harness system
LED Light package (50-state legal)
3 Tail lights per side (amber in center)
Electrical system per DOT regulations
Air, electrical, and hydraulics installed after paint
7-pole electrical connector
Air ride suspension
Adjustable ride height
Raising/lowering air control panel
16 1/2" x 7" air brakes
8.25 x 22.5 10-hole disc wheel
Automatic slack adjusters
One-piece oil seals
Red & white conspicuity markings
Blasted prior to paint
Color: Trail King 2-part polyurethane

Item #	Description	Price		
		TK70HDG	TK102HDG	TK110HDG
	BASE MODEL			
10001	TK70HDG Advantage Plus Hydraulic Detachable	58,702		
10002	TK102HDG Advantage Plus Hydraulic Detachable		74,220	
10003	TK110HDG Advantage Plus Hydraulic Detachable			78,073
	HYDRAULIC GOOSENECK			
Standard Option				
10005	10' 7" (82" swing) hydraulic detachable gooseneck	0		
Substitute Options				
10009	12' gooseneck length (98" and 86" swing)	1,228		
Standard Option				
10004	10' 7" (16" KP setting with 82" swing) hydraulic detachable gooseneck		0	
Substitute Options				
10010	12' gooseneck length (98" and 86" swing)		1,333	
10012	13' 0" (110" and 86" swing) hydraulic detachable gooseneck		1,507	
Standard Option				
10006	13' 0" (110" and 86" swing) hydraulic detachable gooseneck			0
Substitute Options				
10008	10' 7' gooseneck length (82" swing)			-1,205
10011	12' gooseneck length (98" and 86" swing)			-139
Standard Option				
10007	PTO Hydraulics	0	0	0
Substitute Options				
10013	13 HP Honda self-contained hydraulics	2,798	2,798	2,798
Additional Options				
10014	Dual hydraulics with diverter valve	617	617	617
10015	Gooseneck fenders (steel)	768	768	768
11371	Air, elect, and hyd. connections to be on 2nd cross member	14	14	14

Item #	Description	Price		
		TK70HDG	TK102HDG	TK110HDG
	MAIN DECK			
Standard Option				
10016	24' 0" deck length	0		
Substitute Options				
10021	25' 9" deck length	370		
10022	28' 0" deck length	929		
Standard Option				
10018	25' 9" deck length		0	0
Substitute Options				
10020	24' 0" deck length		-403	
10024	24' 0" deck length			-445
10023	28' 0" deck length		717	
10069	28' 0" deck length			2,048
Standard Option				
10017	24" loaded deck height, 8" ground clearance	0	0	0
Substitute Options				
10019	20" loaded deck height w/6" ground clearance	905		
10070	20" loaded deck height w/6" ground clearance		1,665	
10079	20" loaded deck height w/6" ground clearance			1,988
Additional Options				
11033	2 pr d-rings in knuckle trough and 2 pr d-rings in boom trough	227	227	227
11372	1 pr d-rings to be on flange of front slope of wheel area	38	38	38
11373	Top flange reinforcement	410	410	410
	DECKING			
Standard Option				
10025	1 1/2" Oak raised decking (net)	0		
Substitute Options				
10026	1 3/8 Apitong decking (raised)	617		
Additional Options				
11374	Decking in center with outrigger planks loose	1,013	1,013	1,013
11375	Delete outrigger planks	-231	-231	-231
	DECK WIDTH			
Standard Option				
10027	102" deck width	0	0	0
Substitute Options				
10029	10' wide deck and 9' wide wheel area	5,350	5,350	5,350
10030	9' wide deck and wheel area	1,512	1,512	1,512
Standard Option				
10028	Full-width deck	0	0	0
Substitute Options				
10031	Drop side deck (24" inner beam height, 15" outer beam height) 6" g.c. - Deletes 31" loading ramps, front pull-out outrigger, triangle cut-outs, 10" cross members, and adds double-wide flat back at front. Adds oval holes for tie downs on inner main beams. (Non-Flow Line option.)	5,606	5,606	5,606
10032	Rail deck (47" wide) - Deletes 31" front loading ramps, 4-beam main frame construction, 10" I-beam cross members, 4" stub cross members, swingout outriggers, pull-out front HD outrigger.	-5,254	-5,254	-5,254
10033	Tapered deck with high lift cylinders and 42" front ramps - Deletes pull-out outriggers at front and adds double-wide outriggers at front. (Non-Flow Line option.)	8,337	8,337	8,337
	WHEEL AREA			
Standard Option				
10036	Bolster style wheel area	0	0	0
Standard Option				
10037	Fixed wheel area	0	0	0
Substitute Options				
10040	Detachable wheel area with bolt-on front bolsters and horizontal pins (Non-Flow Line option.)	4,604	4,604	4,604
Standard Option				
10038	No wheel covers	0	0	0
Substitute Options				
10041	Load-bearing removable squared wheel covers (TK70HDG 2-axle)	3,131		
10072	Load-bearing removable squared wheel covers (TK102HDG and TK110HDG 3-axle)		4,458	4,458
10042	Load-bearing removable tapered wheel covers (TK70HDG 2-axle)	2,958		
10073	Load-bearing removable tapered wheel covers (TK102HDG and TK110HDG 3-axle)		4,177	4,177
10043	Aluminum non-load bearing wheel covers (TK70HDG 2-axle)	1,059		
10081	Aluminum non-load bearing wheel covers (TK102HDG and TK110HDG 3-axle)		1,525	1,525
Additional Options				
11197	Add upper brackets for hydraulic booster			251

Item #	Description	Price		
		TK70HDG	TK102HDG	TK110HDG
	AXLES			
Standard Option				
10044	25,000-lb. (5/8" wall) axles	0	0	0
Substitute Options				
10045	27,000-lb. (3/4" wall) axles (per trailer)	1,146		
10351	27,000-lb. (3/4" wall) axles (per trailer)		1,719	1,719
Additional Options				
10046	Adjustable ride height	173		
10048	Dust Shields	148		
10074	Dust Shields		222	222
	AXLE SPACING			
Standard Option				
10049	50" axle spacing	0		
Substitute Options				
10052	55" axle spacing Air-ride susp. (adds to OAL)	58		
10053	60" axle spacing Air-ride susp. (adds to OAL)	108		
Standard Option				
10050	55" axle spacing		0	0
Substitute Options				
10051	50" axle spacing Air-ride susp. (reduces OAL)		-143	
10075	50" axle spacing Air-ride susp. (reduces OAL)			-215
10054	60" axle spacing Air-ride susp. (adds to OAL)		158	
10076	60" axle spacing Air-ride susp. (adds to OAL)			249
	BRAKES			
Standard Option				
10055	No ABS	NA	0	0
Substitute Options				
10056	4S2M Anti-lock brakes	0		
10080	4S2M Anti-lock brakes		999	999
10057	Spring brakes (1st and 2nd axles)		288	288
	HUB/DRUM			
Standard Option				
08214	Steel hub-piloted - cast drum (per complete axle)	0	0	0
Substitute Options				
08220	Duralite hub-piloted - Centrifuse drum ILO Std (per complete axle)	400	400	400
	WHEEL FINISH (INSIDE)			
Standard Option				
12849	8.25 x 22.5 10-hole steel disc wheel	0	0	0
Substitute Options				
12851	8.25 x 22.5 10-hole machined aluminum wheel (per wheel) Accuride ILO Std 8.25 x 22.5 10-hole steel disc wheel	183	183	183
	WHEEL FINISH (OUTSIDE)			
Standard Option				
12854	8.25 x 22.5 10-hole steel disc wheel	0	0	0
Substitute Options				
12856	8.25 x 22.5 10-hole machined aluminum wheel (per wheel) Accuride ILO Std 8.25 x 22.5 10-hole steel disc wheel	183	183	183
12857	8.25 x 22.5 10-hole polished aluminum wheel (per wheel) Accuride ILO Std 8.25 x 22.5 10-hole steel disc wheel	197	197	197
12861	8.25 x 22.5 Aluminum - Accu-Shield Polished (per wheel) ILO Std 8.25 x 22.5 10-hole steel disc wheel	302	302	302
	SPARE WHEEL			
Standard Option				
10058	No spare wheel	0	0	0
Substitute Options				
08208	8.25 x 22.5 10-hole steel disc wheel (per wheel)	128	128	128
08029	8.25 x 22.5 10-hole machined aluminum wheel (per wheel) Accuride	311	311	311
08210	8.25 x 22.5 10-hole polished aluminum wheel (per wheel) Accuride	325	325	325
12832	8.25 x 22.5 Aluminum - Accu-Shield Polished (per wheel)	430	430	430
	WHEELS			
Additional Options				
06731	Cat's Eye Tire Equalization System (per complete axle)	235	235	235
06732	Cross-Fire Tire Equalization System (per complete axle)	235	235	235
10077	PSI Tire Inflation System	1,025		
10078	PSI Tire Inflation System		1,437	1,437
	TIRE SIZE			
Standard Option				
07911	255/70R22.5 - 16 ply (tire only) (per tire)	0	0	0
Substitute Options				
08148	275/70R22.5 - 16 ply in lieu of STD 255/70R22.5 - 16 ply (per tire)	60	60	60

Item #	Description	Price		
		TK70HDG	TK102HDG	TK110HDG
	ALTERNATIVE TIRE BRAND			
Additional Options				
08043	Michelin 255/70R22.5 - 16 ply XZE in lieu of STD 255/70R22.5 - 16 ply (per tire)	104	104	104
08048	Michelin 275/70R22.5 - 18 ply XTY-2 in lieu of STD 255/70R22.5 - 16 ply (per tire)	247	247	247
08058	Goodyear 255/70R22.5 - 16 ply G661 HSA in lieu of STD 255/70R22.5 - 16 ply (per tire)	-5	-5	-5
08063	Goodyear 275/70R22.5 - 16 ply G661 HSA in lieu of STD 255/70R22.5 - 16 ply (per tire)	94	94	94
08076	Bridgestone 255/70R22.5 - 16 ply R197 Ecopia in lieu of STD 255/70R22.5 - 16 ply (per tire)	-47	-47	-47
08081	Bridgestone 275/70R22.5 - 18 ply R250ED in lieu of STD 255/70R22.5 - 16 ply (per tire)	215	215	215
08086	Yokohama 255/70R22.5 - 16 ply RY023 in lieu of STD 255/70R22.5 - 16 ply (per tire)	-1	-1	-1
	SPARE TIRES			
Standard Option				
10059	No spare tire	0	0	0
Substitute Options				
08112	255/70R22.5 - 16 ply (tire only) (per tire)	449	449	449
08113	275/70R22.5 - 16 ply (tire only) (per tire)	510	510	510
	ELECTRICAL			
Additional Options				
12351	Wiring required for electric/hydraulic power unit on Hydraulic Booster	678	678	678
	LIGHTS			
Standard Option				
10060	3rd Tail Light Package	0	0	0
Substitute Options				
10061	One pair of 4" round amber strobes at rear ILO 3rd tail light w/switch	184	184	184
Additional Options				
10062	4-pole socket wired to clearance light	66	66	66
10063	Extra clearance light package cut into web O-X-O-X-O	319	319	319
10064	Remote flasher w/ battery back-up	365	365	365
10066	Stainless inserts around lights in tail channel	61	61	61
10067	Strobe light mounted on pedestal	442	442	442
	MISCELLANEOUS			
Additional Options				
10068	Removable oversize load sign (18" H x 84" L)	411	411	411
07714	Air Weigh System (per Advantage Plus! HDG axle group)	853	853	853
10881	Hubodometer	116	116	116
08569	DOT Inspection	147	147	147
	PAINT			
Standard Option				
06027	S7211 Maroon w/ white decals (43-7-009)	0	0	0
08024	Black S7203 with white decals (735-432-039)	0	0	0
08025	Hertz Yellow S7239 with black decals (735-434-016)	0	0	0
08026	New CAT Yellow S7225 with black decals (735-434-018)	0	0	0
08027	Off White S7222 with black decals (735-431-016)	0	0	0
08028	White S7235with black decals (735-431-012)	0	0	0
08029	Bright White with black decals (735-481-053)	0	0	0
08030	IH Red S7205 with white decals (735-437-010)	0	0	0
08031	Grey S7230 with black decals (735-489-029)	0	0	0
08032	Dark Grey S7265 with white decals (735-439-014)	0	0	0
Additional Options				
01080	Non-Metallic color match paint upcharge for 5th wheel trailers	997	997	997
01081	Metallic color match paint upcharge for 5th wheel trailers	1,605	1,605	1,605
06861	Code A - Optional Paint - 5th wheel rollbacks thru TK120HDG	336	336	336
06862	Code B - Optional Paint - 5th wheel rollbacks thru TK120HDG	453	453	453
06863	Code C - Optional Paint - 5th wheel rollbacks thru TK120HDG	581	581	581
06864	Code D - Optional Paint - 5th wheel rollbacks thru TK120HDG	704	704	704
06865	Code E - Optional Paint - 5th wheel rollbacks thru TK120HDG	816	816	816
06866	Code F - Optional Paint - 5th wheel rollbacks thru TK120HDG	938	938	938

* To meet 1997 federal requirements, Trail King offers two variations of the anti-lock braking system.
The minimum 2S1M system is available, but Trail King recommends the 4S2M system.

CAPACITY RATINGS ARE FRAME CAPACITIES ONLY. ACTUAL LOAD CAPACITIES MAY BE RESTRICTED BY FACTORS SUCH AS GROSS AXLE WEIGHT RATINGS (GAWR) OR STATE AND FEDERAL REGULATIONS.
FEDERAL RETAIL EXCISE TAX MUST BE FIGURED ON THE SELLING PRICE WHEN SELLING TO A NON-EXEMPT END USER.

EFFECTIVE 1/15/15.

TRAIL KING CONSTRUCTION DIVISION

ALL RIGHTS RESERVED. TRAIL KING INDUSTRIES, INC., 2015

TRAIL KING SLIDING AXLE TRAILER
"ADVANTAGE PLUS!" SERIES

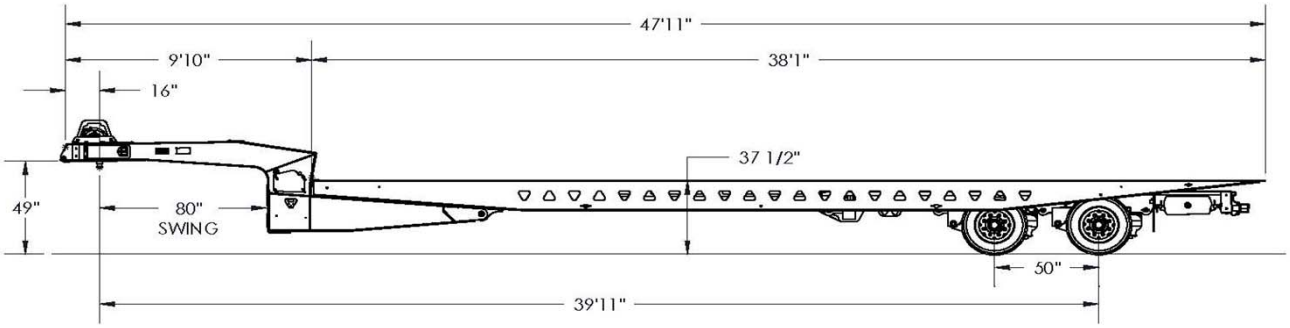

TK80SA Advantage Plus! Sliding Axle trailer

12815 - STANDARD EQUIPMENT
Perimeter Frame Gooseneck Design
Capacity: 80,000 lbs uniform / 50,000 lbs in 10 ft.
37½" loaded deck height with 17.5 tires
42" loaded deck height with 22.5 tires
49" loaded 5th wheel height
9' 10 upper deck
16" kingpin setting with 80" swing clearance
Hydraulic sliding axles
Tiltiing main deck - forms a ramp to upper deck
6½° loading angle, 15° dump angle
Air Ride suspension
Air Ride lowering control panel on upper deck
with liquid filled guage.
No traveling hydraulic lines for sliding axle operation
Side by side 2-stage cylinder, closed in travel position
Air and electrical lines contained in protective track
Single recessed winch roller at front of deck
Push button hydraulic valve controls (driver side only)
Full-function wireless remote

Central located lube system
4 beam main frame construction
3" I-beam crossmembers
Triangle cutouts
(2) 25,000 lb axles (5/8" wall)
4S2M ABS Brakes
Automatic slack adjusters
One-piece oil seals
Pro Tork axle nuts
80' winch cable with locking safety hook
Key hole slots on 24" centers in inner and outer beams
3/8" smooth approach plate
4-way slots on approach plate
2 side access tool boxes at front of upper deck
LED lights, 50 state legal
Electrical system per DOT regulations
Rubber mounted sealed lights with sealed harness system
Mud flaps
Red & white conspicuity markings
Paint- Trail King 2-part polyurethane

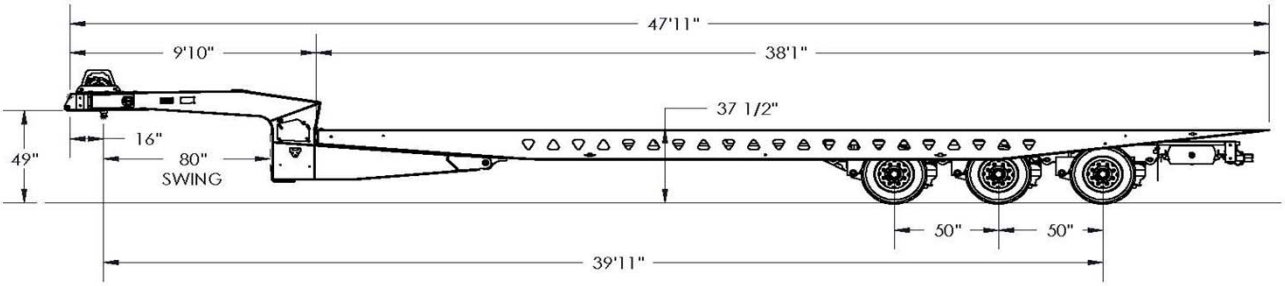

TK110SA Advantage Plus! Sliding Axle trailer

12816 - STANDARD EQUIPMENT
Perimeter Frame Gooseneck Design
Capacity: 110,000 lbs uniform / 70,000 lbs in 16 ft.
37½" loaded deck height with 17.5 tires
42" loaded deck height with 22.5 tires
49" loaded 5th wheel height
9' 10 upper deck
16" kingpin setting with 80" swing clearance
Hydraulic sliding axles
Tiltiing main deck - forms a ramp to upper deck
6½° loading angle, 15° dump angle
Air Ride suspension
Air Ride lowering control panel on upper deck
with liquid filled guage.
No traveling hydraulic lines for sliding axle operation
Side by side 2-stage cylinder, closed in travel position
Air and electrical lines contained in protective track
Single recessed winch roller at front of deck
Push button hydraulic valve controls (driver side only)
Full-function wireless remote
Central located lube system
4 beam main frame construction
3" I-beam crossmembers, 8" on center
Triangle cutouts
(3) 25,000 lb axles (5/8" wall)
4S2M ABS Brakes
Automatic slack adjusters
One-piece oil seals
Pro Tork axle nuts
80' winch cable with locking safety hook
Key hole slots on 24" centers in inner and outer beams
3/8" smooth approach plate
4-way slots on approach plate
2 side access tool boxes at front of upper deck
LED lights, 50 state legal
Electrical system per DOT regulations
Rubber mounted sealed lights with sealed harness system
Mud flaps
Red & white conspicuity markings
Paint- Trail King 2-part polyurethane

Item #	Description	Price	
		TK80SA	TK110SA
	BASE MODEL		
12815	TK80SA Advantage Plus! Sliding Axle trailer	87,735	
12816	TK110SA Advantage Plus! Sliding Axle trailer		95,682
	UPPER DECK		
Standard Option			
13124	No Headboard	0	0
Substitute Options			
13130	10" Headboard (removable)	378	378
13125	48" Headboard (removable)	1,271	1,271
13126	48" Headboard (removable) with Work Lights	2,009	2,009
	FIFTH WHEEL HEIGHT		
Standard Option			
10894	49" loaded fifth wheel height	0	0
Substitute Options			
10895	54" loaded fifth wheel height, (10' wide only)		836
	WINCH		
Standard Option			
10896	20,000 lb. hydraulic winch with level wind (mounted above king pin) Includes 9/16 x 80' cable	0	0
Substitute Options			
10897	12,000 lb. hydraulic winch ILO standard	-1,611	-1,611
13105	30,000 lb. hydraulic winch with level wind (mounted above king pin) Includes 5/8" x 80' cable	608	608
Standard Option			
10898	Winch guard	0	0
Substitute Options			
10899	Delete Winch guard	-338	-338
Standard Option			
13106	Winch Cable Skid Plate on Upper Deck	0	0
Substitute Options			
13107	Winch Deck Roller ILO of STD Skid Plate	553	553
Additional Options			
13108	Fair Lead Roller Installation	600	600
13109	20k Free Winch Air Spool	563	563
13110	30k Free Winch Air Spool	741	741

Item #	Description	Price	
		TK80SA	TK110SA
	HYDRAULICS		
Standard Option			
10900	PTO hydraulic tilt	0	0
Substitute Options			
12817	24 HP Honda SCU in drop	4,141	4,141
12819	24 HP Honda SCU (with cover) above winch	5,368	5,368
	LANDING GEAR		
Standard Option			
10906	2 Speed park stands (crank curb side)	0	0
Substitute Options			
10907	Pin-type park stands	-54	-54
	OVERALL LENGTH		
Standard Option			
10885	47'-11" overall length	0	0
Substitute Options			
10886	49'-11" overall length	731	731
13111	50'-11" overall length for TK80SA+	700	
10887	52'-11" overall length	1,600	1,600
	OVERALL WIDTH		
Standard Option			
10891	102" wide	0	0
Substitute Options			
10892	9' wide	461	461
12820	10' wide	1,549	1,549
	MAIN DECK		
Standard Option			
13112	TK80SA+ 12" Cross member spacing	0	
Substitute Options			
13113	TK80SA+ 8" Cross member spacing	650	
	DECKING, MAIN DECK		
Standard Option			
10908	1 3/8" (NET) apitong deck raised	0	0
Substitute Options			
10909	1½" Oak decking (raised)	-1,142	
10910	1 1/8" (NET) apitong deck flush	-308	
10911	1½" Oak decking (raised)		-1,348
10912	1 1/8" (NET) apitong deck flush		-402
	TIE DOWNS		
Additional Options			
10916	Add exterior bent d-rings on 48" centers	497	497
10917	Weld-on 3 bar strap winch (road side) with hook (curb side) quantity 14	797	797
12818	Add stake pockets on 48" centers to upper and lower deck	571	571
	DECKING, APPROACH PLATE		
Standard Option			
12821	3/8" smooth approach plate	0	0
Substitute Options			
12822	Star traction material on approach plate	485	485
12823	Traction grouser bars on approach plate	313	313
	AXLE SPACING		
Standard Option			
13127	50" Axle Spacing	0	0
Substitute Options			
13114	55" Axle Spacing	102	102
13115	60" Axle Spacing	147	147
13116	10'-1" Axle Spacing on TK80SA+	203	
Additional Options			
13117	Add 3rd axle to TK80SA+	6,873	
	HUB / DRUM		
Standard Option			
13128	Steel hub-piloted - cast drum (per complete axle)	0	0
Substitute Options			
13129	Duralite hub-piloted - Centrifuse drum ILO Std (per complete axle) (22.5 wheels only)		0
	WHEEL FINISH (INSIDE)		
Standard Option			
08182	6.75 x 17.5 8-hole steel disc wheel	0	0
Substitute Options			
08183	6.75 x 17.5 8-hole machined aluminum wheel (per wheel) ILO Std 6.75 x 17.5 8-hole steel disc wheel	168	168
10930	7.50 x 22.5 machined aluminum ILO Std steel wheels (not available for widths 8' 6" or narrower with aluminum outside wheels) (per wheel)		208

Item #	Description	Price	
		TK80SA	TK110SA
	WHEEL FINISH (OUTSIDE)		
Standard Option			
08192	6.75 x 17.5 8-hole steel disc wheel	0	0
Substitute Options			
08193	6.75 x 17.5 8-hole machined aluminum wheel (per wheel) ILO Std 6.75 x 17.5 8-hole steel disc wheel	168	168
08194	6.75 x 17.5 8-hole polished aluminum wheel (per wheel) ILO Std 6.75 x 17.5 8-hole steel disc wheel	194	194
10931	7.50 x 22.5 machined aluminum ILO Std steel wheels (per wheel)		208
10932	7.50 x 22.5 polished aluminum ILO Std steel wheels (per wheel)		249
	SPARE WHEEL		
Standard Option			
10058	No spare wheel	0	0
Substitute Options			
08205	6.75 x 17.5 8-hole steel disc wheel (per wheel)	158	158
08206	6.75 x 17.5 8-hole machined aluminum wheel (per wheel)	326	326
08207	6.75 x 17.5 8-hole polished aluminum wheel (per wheel)	352	352
10933	7.50 x 22.5 10-hole steel disc wheel (per wheel)		199
10934	7.50 x 22.5 machined aluminum ILO Std steel wheels (per wheel)		366
10935	7.50 x 22.5 polished aluminum ILO Std steel wheels (per wheel)		407
	TIRE SIZE		
Standard Option			
07907	235/75R17.5 - 18 ply HTL2 (tire only) (per tire)	0	0
Substitute Options			
13038	245/70R17.5 - 18 ply in lieu of STD 235/75R17.5 - 18 ply HTL2 (per tire)	5	5
08142	255/70R22.5 - 16 ply in lieu of STD 235/75R17.5 - 18 ply HTL2 (per tire)		102
	ALTERNATIVE TIRE BRAND		
Additional Options			
08033	Michelin 235/75R17.5 - 18 ply HTL2 XTE2 in lieu of STD 235/75R17.5 - 18 ply HTL2 (per tire)	125	125
08039	Michelin 245/70R17.5 - 16 ply XTA in lieu of STD 255/70R22.5 - 16 ply (per tire)	46	46
08066	Goodyear 245/70R17.5 - 16 ply in lieu of STD 235/75R17.5 - 18 ply HTL2 (per tire)	135	135
08070	Bridgestone 245/70R17.5 - 16 ply R184 in lieu of STD 235/75R17.5 - 18 ply HTL2 (per tire)	157	157
08041	Michelin 255/70R22.5 - 16 ply XZE in lieu of STD 235/75R17.5 - 18 ply HTL2 (per tire)		206
08056	Goodyear 255/70R22.5 - 16 ply G661 HSA in lieu of STD 235/75R17.5 - 18 ply HTL2 (per tire)		97
08074	Bridgestone 255/70R22.5 - 16 ply R197 Ecopia in lieu of STD 235/75R17.5 - 18 ply HTL2 (per tire)		55
08084	Yokohama 255/70R22.5 - 16 ply RY023 in lieu of STD 235/75R17.5 - 18 ply HTL2 (per tire)		101
	SPARE TIRES		
Standard Option			
10059	No spare tire	0	0
Substitute Options			
08110	235/75R17.5 - 18 ply HTL2 (tire only) (per tire)	347	347
08112	255/70R22.5 - 16 ply (tire only) (per tire)		449
08113	275/70R22.5 - 16 ply (tire only) (per tire)		510
08115	Michelin 235/75R17.5 - 16 ply XTE2 (tire only) (per tire)	472	472
08116	Michelin 245/70R17.5 - 16 ply XTA (tire only) (per tire)	459	459
08117	Michelin 255/70R22.5 - 16 ply XZE (tire only) (per tire)		554
08121	Goodyear 255/70R22.5 - 16 ply G661 HSA (tire only) (per tire)		444
08123	Goodyear 245/70R17.5 - 16 ply (tire only) (per tire)	483	483
08124	Bridgestone 245/70R17.5 - 16 ply R184 (tire only) (per tire)	505	505
08125	Bridgestone 255/70R22.5 - 16 ply R197 Ecopia (tire only) (per tire)		403
13036	Continental 245/70R17.5 18 ply HTL2 (tire only) (per tire)		353
08127	Yokohama 255/70R22.5 - 16 ply RY023 (tire only) (per tire)		448
	LIGHTS / ELECTRICAL		
Standard Option			
12878	Mid-turn signal clearance lights	0	0
Substitute Options			
12879	Clearance lights X-O-X-O-X	486	486
Standard Option			
12880	3rd tail light package	0	0
Substitute Options			
12881	One pair of amber strobes ILO 3rd tail light package	271	271
Additional Options			
10918	4 way socket at rear	116	116
10919	Canadian style swingout lights (per pair)		772

Item #	Description	Price	
		TK80SA	TK110SA
	MISCELLANEOUS		
	Additional Options		
10920	Dock levelers (1 pair)	6,258	6,258
10921	Flag holders at front	109	109
10922	Hubodometer	157	157
10923	Air Weigh system (per Advantage SA axle group)	1,098	1,098
10924	PSI Tire Inflation System (2 axle)	1,105	
10925	Cat's Eye Tire Equalization System (2 axle)	415	
10926	Cross-Fire Tire Equalization System (2 axle)	391	
10927	PSI Tire Inflation System (3 axle)		1,316
10928	Cat's Eye Tire Equalization System (3 axle)		731
10929	Cross-Fire Tire Equalization System (3 axle)		587
13118	Trackless Systems (Arctic Air/ELEC, Grote Only)	776	776
13119	Trackless Systems (Arctic Air/ELEC, Truck-Lite)	2,041	2,041
13120	Skid Plate for Containers flush with top flanges	817	817
13121	Container Guides (1" x 1") Includes Front Container Stops to protect Upper Deck	659	659
13122	9" swingouts (Includes stiffener on the inside of the main beam behind swingout)	2,545	2,545
13123	AUX Air Outlet	132	132
12875	Add curbside push button hydraulic control pad with LED indicators	714	714
12876	Add top access for toolboxes (2) with lockable covers with gas shocks	236	236
08569	DOT Inspection	147	147
	PAINT		
Standard Option			
06027	S7211 Maroon w/ white decals (43-7-009)	0	0
08024	Black S7203 with white decals (735-432-039)	0	0
08025	Hertz Yellow S7239 with black decals (735-434-016)	0	0
08026	New CAT Yellow S7225 with black decals (735-434-018)	0	0
08027	Off White S7222 with black decals (735-431-016)	0	0
08028	White S7235with black decals (735-431-012)	0	0
08029	Bright White with black decals (735-481-053)	0	0
08030	IH Red S7205 with white decals (735-437-010)	0	0
08031	Grey S7230 with black decals (735-489-029)	0	0
08032	Dark Grey S7265 with white decals (735-439-014)	0	0
	Additional Options		
01080	Non-Metallic color match paint upcharge for 5th wheel trailers	997	997
01081	Metallic color match paint upcharge for 5th wheel trailers	1,605	1,605
06861	Code A - Optional Paint - 5th wheel rollbacks thru TK120HDG	336	336
06862	Code B - Optional Paint - 5th wheel rollbacks thru TK120HDG	453	453
06863	Code C - Optional Paint - 5th wheel rollbacks thru TK120HDG	581	581
06864	Code D - Optional Paint - 5th wheel rollbacks thru TK120HDG	704	704
06865	Code E - Optional Paint - 5th wheel rollbacks thru TK120HDG	816	816
06866	Code F - Optional Paint - 5th wheel rollbacks thru TK120HDG	938	938

* To meet 1997 federal requirements, Trail King offers two variations of the anti-lock braking system.
The minimum 2S1M system is available, but Trail King recommends the 4S2M system.

CAPACITY RATINGS ARE FRAME CAPACITIES ONLY. ACTUAL LOAD CAPACITIES MAY BE RESTRICTED BY FACTORS SUCH AS GROSS AXLE WEIGHT RATINGS (GAWR) OR STATE AND FEDERAL REGULATIONS.
FEDERAL RETAIL EXCISE TAX MUST BE FIGURED ON THE SELLING PRICE WHEN SELLING TO A NON-EXEMPT END USER.

EFFECTIVE 1/15/15.

TRAIL KING CONSTRUCTION DIVISION

ALL RIGHTS RESERVED. TRAIL KING INDUSTRIES, INC., 2015

TRAIL KING FLIP AXLE

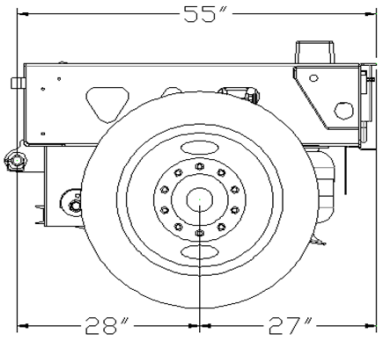

TKFA1 Flip Axle

10988 - STANDARD EQUIPMENT
Pan style design
Air ride suspension
Chain-ups on axle
Automatic slack adjusters
8.25 x 22.5 10-hole disc wheel
One-piece axle seals
Pro tork axle nuts
LED lights, 50 state legal
Electrical system per DOT regulations
Flagholders
Wide Load sign brackets
(2) D-rings on rear channel
Rubber mounted sealed lights with sealed harness system
Mudflaps
Red and white conspicuity markings
Paint: Trail King 2-part polyurethane

Item #	Description	Price
	BASE MODEL	
10988	TKFA1 Flip Axle	13,949
	AXLE SPACING	
Standard Option		
10989	55" axle spacing	0
Substitute Options		
10990	60" axle spacing	76
	OVERALL WIDTH	
Standard Option		
10991	102" overall width	0
Substitute Options		
10992	108" (9'0") overall width	265
	BEAM DEPTH	
Standard Option		
10993	For correct Flip Axle beam depth, specify the Serial # of the corresponding trailer.	0
	POSITION	
Standard Option		
10995	Rear flip axle	0
Substitute Options		
10996	Intermediate flip axle (for 2 flip axle setup)	2,267
	FLIP AXLE STYLES	
Standard Option		
10997	Open wheels with load bearing tail channel	0
Substitute Options		
10998	Load bearing wheel cover (square), center open	2,075
12670	Load bearing wheel cover (tapered), center open	2,075
10999	Lightweight aluminum wheel cover, center open	868
11000	Wood filled, full width 1-1/8" apitong (requires trailer with full width rear)	2,433
11376	Full width Aluminum/steel combo to match MG (1-1/8" apitong decking)	4,243
11001	No tail channel or lights, intermediate flip only	-477

Item #	Description	Price
	UPPER BRACKET STYLE	
Standard Option		
11002	Upper Links for HDG ADV Plus trailer	0
Substitute Options		
11003	Tension Upper Links for HDG ADV Plus trailer	305
11004	Upper Links for trailers other than HDG ADV Plus	16
11005	Tension Upper Links for trailers other than HDG ADV Plus	335
	AXLES	
Standard Option		
11006	25,000 lb. (5/8" wall) axle	0
Substitute Options		
11007	27,000 lb (3/4" wall) axle	632
	BRAKES	
Standard Option		
11010	16.5 x 7 drum style	0
Substitute Options		
11011	Disc brakes (includes Silent Drive suspension)	3,690
Additional Options		
11012	Dust shields	133
	HUB / DRUM	
Standard Option		
11008	Steel hub-piloted - Cast drum	0
Substitute Options		
11009	Duralite hub piloted - Centrifuse drum	293
	WHEEL FINISH (INSIDE)	
Standard Option		
12849	8.25 x 22.5 10-hole steel disc wheel	0
Substitute Options		
12850	6.75 x 17.5 8-hole steel disc wheel (per wheel) ILO Std 8.25 x 22.5 10-hole steel disc wheel	29
12931	6.75 x 17.5 8-hole machined aluminum wheel (per wheel) ILO Std 8.25 x 22.5 10-hole steel disc wheel	198
12851	8.25 x 22.5 10-hole machined aluminum wheel (per wheel) Accuride ILO Std 8.25 x 22.5 10-hole steel disc wheel	183
12852	8.25 x 24.5 10-hole steel disc wheel (per wheel) ILO Std 8.25 x 22.5 10-hole steel disc wheel	10
12853	8.25 x 24.5 10-hole machined aluminum wheel (per wheel) Accuride ILO Std 8.25 x 22.5 10-hole steel disc wheel	209
	WHEEL FINISH (OUTSIDE)	
Standard Option		
12854	8.25 x 22.5 10-hole steel disc wheel	0
Substitute Options		
12855	6.75 x 17.5 8-hole steel disc wheel (per wheel) ILO Std 8.25 x 22.5 10-hole steel disc wheel	29
12932	6.75 x 17.5 8-hole machined aluminum wheel (per wheel) ILO Std 8.25 x 22.5 10-hole steel disc wheel	198
12933	6.75 x 17.5 8-hole polished aluminum wheel (per wheel) ILO Std 8.25 x 22.5 10-hole steel disc wheel	223
12856	8.25 x 22.5 10-hole machined aluminum wheel (per wheel) Accuride ILO Std 8.25 x 22.5 10-hole steel disc wheel	183
12857	8.25 x 22.5 10-hole polished aluminum wheel (per wheel) Accuride ILO Std 8.25 x 22.5 10-hole steel disc wheel	197
12858	8.25 x 24.5 10-hole steel disc wheel (per wheel) ILO Std 8.25 x 22.5 10-hole steel disc wheel	10
12859	8.25 x 24.5 10-hole machined aluminum wheel (per wheel) Accuride ILO Std 8.25 x 22.5 10-hole steel disc wheel	209
12860	8.25 x 24.5 10-hole polished aluminum wheel (per wheel) Accuride ILO Std 8.25 x 22.5 10-hole steel disc wheel	210
12861	8.25 x 22.5 Aluminum - Accu-Shield Polished (per wheel) ILO Std 8.25 x 22.5 10-hole steel disc wheel	302
12862	8.25 x 24.5 Aluminum - Accu-Shield -Polished (per wheel) ILO Std 8.25 x 22.5 10-hole steel disc wheel	315
	TIRE SIZE	
Standard Option		
07911	255/70R22.5 - 16 ply (tire only) (per tire)	0
Substitute Options		
08148	275/70R22.5 - 16 ply in lieu of STD 255/70R22.5 - 16 ply (per tire)	60
	ALTERNATIVE TIRE BRAND	
Additional Options		
08043	Michelin 255/70R22.5 - 16 ply XZE in lieu of STD 255/70R22.5 - 16 ply (per tire)	104
08048	Michelin 275/70R22.5 - 18 ply XTY-2 in lieu of STD 255/70R22.5 - 16 ply (per tire)	247
08058	Goodyear 255/70R22.5 - 16 ply G661 HSA in lieu of STD 255/70R22.5 - 16 ply (per tire)	-5
08063	Goodyear 275/70R22.5 - 16 ply G661 HSA in lieu of STD 255/70R22.5 - 16 ply (per tire)	94
08076	Bridgestone 255/70R22.5 - 16 ply R197 Ecopia in lieu of STD 255/70R22.5 - 16 ply (per tire)	-47
08081	Bridgestone 275/70R22.5 - 18 ply R250ED in lieu of STD 255/70R22.5 - 16 ply (per tire)	215
08086	Yokohama 255/70R22.5 - 16 ply RY023 in lieu of STD 255/70R22.5 - 16 ply (per tire)	-1

Item #	Description	Price
	LIGHTS / ELECTRICAL	
Standard Option		
11013	3rd Tail Light Package	0
Substitute Options		
11014	One pair of 4" round amber strobes (with switch) at rear in lieu of 3rd tail light	203
Additional Options		
11015	4-pole female electrical socket wired to clearance light in light channel	73
11016	Revolving light mounted on a pedestal	258
11017	Strobe light mounted on a pedestal	332
	MISCELLANEOUS	
Additional Options		
11018	Air Lift (requires tension brackets)	1,190
11019	Hubodometer	128
11020	Air Weigh system (per Flip Axle axle group)	940
11021	PSI Tire Inflation System (1 axle)	1,061
11022	Cat's Eye Tire Equalization System (1 axle)	261
11023	Cross-Fire Tire Equalization System (1 axle)	200
11024	Stainless Inserts around lights in tail channel	68
11025	Removable Oversize Load sign (includes signage)	454
08569	DOT Inspection	147
	PAINT	
Standard Option		
06027	S7211 Maroon w/ white decals (43-7-009)	0
08024	Black S7203 with white decals (735-432-039)	0
08025	Hertz Yellow S7239 with black decals (735-434-016)	0
08026	New CAT Yellow S7225 with black decals (735-434-018)	0
08027	Off White S7222 with black decals (735-431-016)	0
08028	White S7235with black decals (735-431-012)	0
08029	Bright White with black decals (735-481-053)	0
08030	IH Red S7205 with white decals (735-437-010)	0
08031	Grey S7230 with black decals (735-489-029)	0
08032	Dark Grey S7265 with white decals (735-439-014)	0
Additional Options		
01069	Non-Metallic color match paint upcharge for flips axles	325
01070	Metallic color match paint upcharge for flips axles	453
01083	Code A - Optional Paint - Flip Axles	107
01085	Code B - Optional Paint - Flip Axles	128
01087	Code C - Optional Paint - Flip Axles	155
01089	Code D - Optional Paint - Flip Axles	192
01091	Code E - Optional Paint - Flip Axles	213
01093	Code F - Optional Paint - Flip Axles	251

* To meet 1997 federal requirements, Trail King offers two variations of the anti-lock braking system.
The minimum 2S1M system is available, but Trail King recommends the 4S2M system.

CAPACITY RATINGS ARE FRAME CAPACITIES ONLY. ACTUAL LOAD CAPACITIES MAY BE RESTRICTED BY FACTORS SUCH AS GROSS AXLE WEIGHT RATINGS (GAWR) OR STATE AND FEDERAL REGULATIONS.
FEDERAL RETAIL EXCISE TAX MUST BE FIGURED ON THE SELLING PRICE WHEN SELLING TO A NON-EXEMPT END USER.

EFFECTIVE 1/15/15.

TRAIL KING COMMERCIAL DIVISION

ALL RIGHTS RESERVED. TRAIL KING INDUSTRIES, INC., 2015

TRAIL KING INDUSTRIAL ROLLBACK TRAILER
RB SERIES

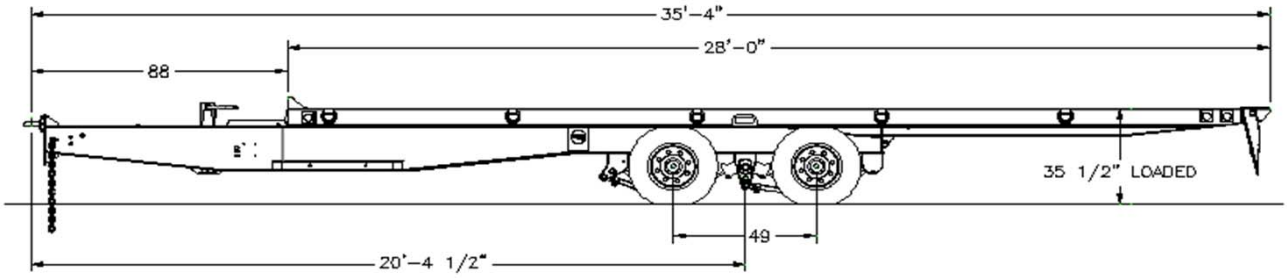

TK40RB Rollback Trailer

11357 - STANDARD EQUIPMENT
40,000 lbs capacity
7' 4" tongue
102" wide
Pintle eye w/adjustable height (18 3/4" to 29 3/4")
12K HD jack with spring foot
35 1/2" loaded deck height
(2) 20,000 lb. capacity axles
49" axle spacing
12 1/4" X 7 1/2" air brakes
4S2M ABS
Spring suspension
6.75 X 17.5 dual steel 8-stud hub-piloted wheels
(10) D-rings
Bed rolls back and tilts to achieve 7 degree load angle
Safety chains with grab hooks
Floor plate on approach plate and fold under
17" hydraulic fold-down approach plate and underride protection
Covered, lockable tool box
Headboard
I-beam and formed channel cross members
Registration holder
LED lights
Combination midturn signal/center marker light
Rubber mounted sealed lights with sealed harness system
Electrical system per DOT regulations
Mudflaps
Red and white conspicuity markings
Paint: Trail King 2-part polyurethane

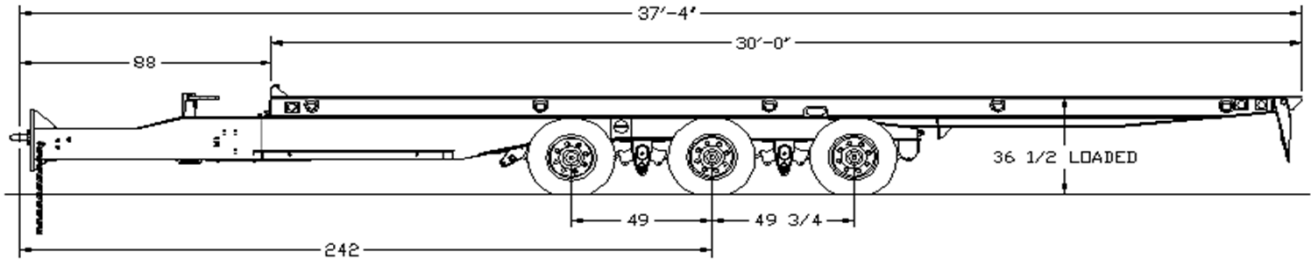

TK50RB Rollback Trailer

11358 - STANDARD EQUIPMENT
50,000 lbs capacity
7' 4" tongue
102" wide
Pintle eye (adjustable height (12 3/4" to 26 1/4")
12K HD jack with spring foot
36 1/2" loaded deck height
(3) 20,000 lb. capacity axles
49"/49 3/4" axle spacings
12 1/4' X 7 1/2" air brakes
4S2M ABS
Spring suspension
215/75R X 17.5 Tires
6.75 X 17.5 dual steel 8-stud hub-piloted wheels
(10) D-rings
Bed rolls back and tilts to achieve 7 degree load angle
Safety chains with grab hooks
Floor plate on approach plate and fold under
17" hydraulic fold-down approach plate and underride protection
Covered, lockable tool box
Headboard
I-beam and formed channel cross members
Registration holder
LED lights
Combination midturn signal/center marker light
Rubber mounted sealed lights with sealed harness system
Electrical system per DOT regulations
Mudflaps
Red and white conspicuity markings
Paint: Trail King 2-part polyurethane

Item #	Description	Price	
		TK40RB	TK50RB
	BASE MODEL		
11357	TK40RB Rollback Trailer	44,031	
11358	TK50RB Rollback Trailer		53,085
	DECK LENGTH		
Standard Option			
11359	28' Deck Length	0	
Substitute Options			
11360	30' Deck Length	677	
Standard Option			
11361	30' Deck Length		0
Substitute Options			
11362	34' Deck Length		2,017
	DECKING		
Standard Option			
11363	1 3/8" Apitong	0	0
Substitute Options			
11364	1 1/2" Oak	-1,188	
11365	1 1/2" Oak		-1,277
	HYDRAULIC SUPPLY		
Standard Option			
11366	PTO Hydraulics from truck	0	0
Substitute Options			
11367	13HP Honda SCU	4,710	
11368	13HP Honda SCU		4,720
	WHEEL FINISH (INSIDE)		
Standard Option			
08182	6.75 x 17.5 8-hole steel disc wheel	0	0
Substitute Options			
08183	6.75 x 17.5 8-hole machined aluminum wheel (per wheel) ILO Std 6.75 x 17.5 8-hole steel disc wheel	168	168
	WHEEL FINISH (OUTSIDE)		
Standard Option			
08192	6.75 x 17.5 8-hole steel disc wheel	0	0
Substitute Options			
08193	6.75 x 17.5 8-hole machined aluminum wheel (per wheel) ILO Std 6.75 x 17.5 8-hole steel disc wheel	168	168
08194	6.75 x 17.5 8-hole polished aluminum wheel (per wheel) ILO Std 6.75 x 17.5 8-hole steel disc wheel	194	194
	SPARE WHEEL		
Standard Option			
10058	No spare wheel	0	0
Substitute Options			
08205	6.75 x 17.5 8-hole steel disc wheel (per wheel)	158	158
08206	6.75 x 17.5 8-hole machined aluminum wheel (per wheel)	326	326
08207	6.75 x 17.5 8-hole polished aluminum wheel (per wheel)	352	352
	TIRE SIZE		
Standard Option			
07904	215/75R17.5 - 18 ply HTL2 (tire only) (per tire)	0	0
Substitute Options			
08133	235/75R17.5 - 18 ply HTL2 in lieu of STD 215/75R17.5 - 16 ply (per tire)	48	
	ALTERNATIVE TIRE BRAND		
Additional Options			
08034	Michelin 235/75R17.5 - 16 ply XTE2 in lieu of STD 215/75R17.5 - 16 ply (per tire)	173	
08053	Goodyear 215/75R17.5 - 16 ply G114 in lieu of STD 215/75R17.5 - 16 ply (per tire)	59	59
	SPARE TIRES		
Standard Option			
10059	No spare tire	0	0
Substitute Options			
08110	235/75R17.5 - 18 ply HTL2 (tire only) (per tire)	347	
08111	215/75R17.5 - 18 ply HTL2 (tire only) (per tire)	299	299
08115	Michelin 235/75R17.5 - 16 ply XTE2 (tire only) (per tire)	472	
08120	Goodyear 215/75R17.5 - 16 ply G114 (tire only) (per tire)	358	358
	MISCELLANEOUS		
Additional Options			
11370	12K Winch mounted above tongue with wireless remote and recessed roller	3,762	3,762
08569	DOT Inspection	147	147

Item #	Description	Price	
		TK40RB	TK50RB
	PAINT		
Standard Option			
06027	S7211 Maroon w/ white decals (43-7-009)	0	0
08024	Black S7203 with white decals (735-432-039)	0	0
08025	Hertz Yellow S7239 with black decals (735-434-016)	0	0
08026	New CAT Yellow S7225 with black decals (735-434-018)	0	0
08027	Off White S7222 with black decals (735-431-016)	0	0
08028	White S7235with black decals (735-431-012)	0	0
08029	Bright White with black decals (735-481-053)	0	0
08030	IH Red S7205 with white decals (735-437-010)	0	0
08031	Grey S7230 with black decals (735-489-029)	0	0
08032	Dark Grey S7265 with white decals (735-439-014)	0	0
Additional Options			
05004	Non-Metallic color match paint upcharge for rollbacks, and jeeps & boosters	592	592
01075	Metallic color match paint upcharge for rollbacks, and jeeps & boosters	837	837
01095	Code A - Optional Paint - rollbacks, and jeeps & boosters	139	139
01097	Code B - Optional Paint - rollbacks, and jeeps & boosters	171	171
01099	Code C - Optional Paint - rollbacks, and jeeps & boosters	208	208
01101	Code C - Optional Paint - rollbacks, and jeeps & boosters	208	208
01103	Code E - Optional Paint - rollbacks, and jeeps & boosters	293	293
01105	Code F - Optional Paint - rollbacks, and jeeps & boosters	331	331

* To meet 1997 federal requirements, Trail King offers two variations of the anti-lock braking system.
The minimum 2S1M system is available, but Trail King recommends the 4S2M system.

CAPACITY RATINGS ARE FRAME CAPACITIES ONLY. ACTUAL LOAD CAPACITIES MAY BE RESTRICTED BY FACTORS SUCH AS GROSS AXLE WEIGHT RATINGS (GAWR) OR STATE AND FEDERAL REGULATIONS.
FEDERAL RETAIL EXCISE TAX MUST BE FIGURED ON THE SELLING PRICE WHEN SELLING TO A NON-EXEMPT END USER.

EFFECTIVE 1/15/15.

TRAIL KING CONSTRUCTION DIVISION

ALL RIGHTS RESERVED. TRAIL KING INDUSTRIES, INC., 2015

TRAIL KING INDUSTRIAL TAG TRAILER

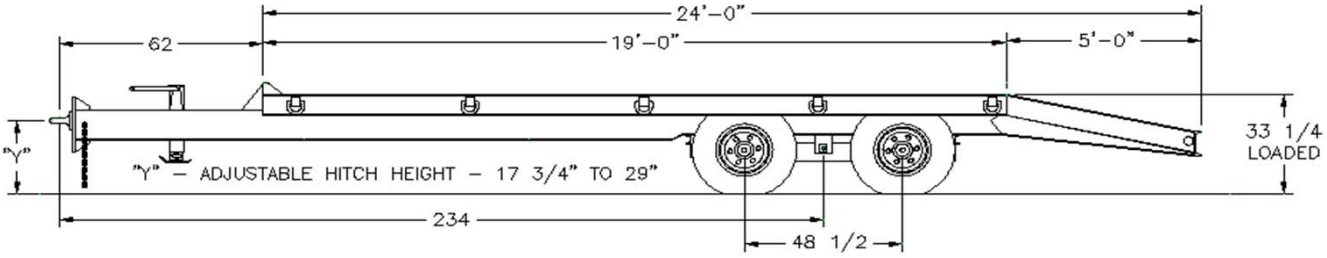

TK20LP TAG TRAILER

11200 - STANDARD EQUIPMENT
8'-6" wide deck
5' tongue
Pintle eye (adjustable height (17 3/4" to 29")
33 1/4" loaded deck height
(2) 10,000 lb. capacity GD axles
Electric brakes
Slipper spring suspension
48 1/2" axle spacing
Dual 6 x 16 8-hole steel disc wheels
ST235/80R16 - 10 ply tires
12K HD jack with spring foot
(10) D-rings
5' Ladder style ramps
Spring assist for ramps
Maximum adjustable ramps
Safety chains with grab hooks
Lockable tool box
Head board
I-beam cross members on 16" centers
Registration holder
LED lights
Rubber mounted sealed lights with sealed harness system
Electrical system per DOT regulations
Red and white conspicuity markings
Paint: Trail King 2-part polyurethane

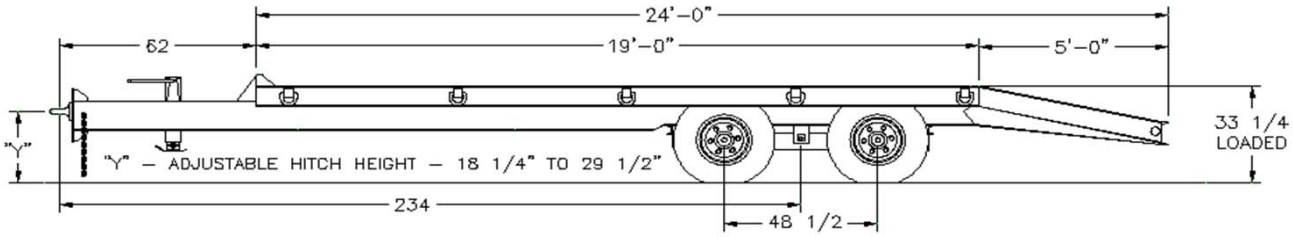

TK24LP TAG TRAILER

11201 - STANDARD EQUIPMENT
8'-6" wide deck
5' tongue
Pintle eye (adjustable height (18 1/4" to 29 1/2")
33 1/4' loaded deck height
(2) 12,000 lb. capacity axles
48 1/2" axle spacing
Dual 6 x 16 8-hole steel disc wheels
ST235/80R16 - 10 ply tires
(10) D-rings
5' Ladder style ramps
Spring assist for ramps
Maximum adjustable ramps
Safety chains with grab hooks
Lockable tool box
Head board
I-beam cross members on 16" centers
Registration holder
LED lights
Rubber mounted sealed lights with sealed harness system
Electrical system per DOT regulations
Red and white conspicuity markings
Paint: Trail King 2-part polyurethane

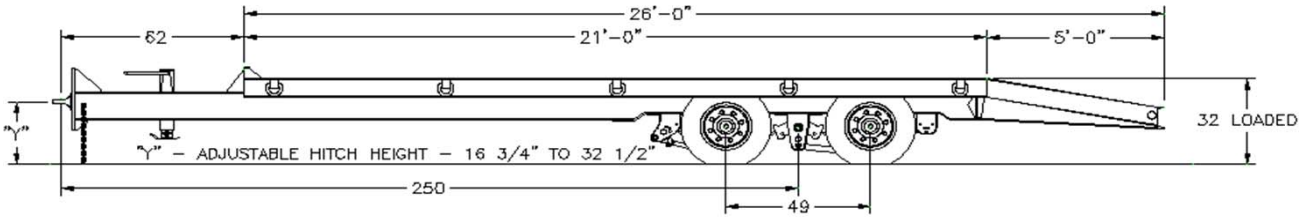

TK40LP TAG TRAILER

11202 - STANDARD EQUIPMENT
8'-6" wide deck
5' tongue
Pintle eye (adjustable height (16 3/4" to 32 1/2")
32" loaded deck height
(2) 22,500 lb. capacity axles
4-leaf spring supension
49" axle spacing
12 1/4" X 7 1/2" air brakes
4S2M ABS anti-lock brakes
Dual 6.75 x 17.5 8-hole disc wheels
(10) D-rings
5' Ramps with spring assist
Maximum adjustable ramps
Safety chains with grab hooks
Lockable tool box
Head board
I-beam cross members on 16" centers
Registration holder
LED lights
Rubber mounted sealed lights with sealed harness system
Electrical system per DOT regulations
Red and white conspicuity markings
Paint: Trail King 2-part polyurethane

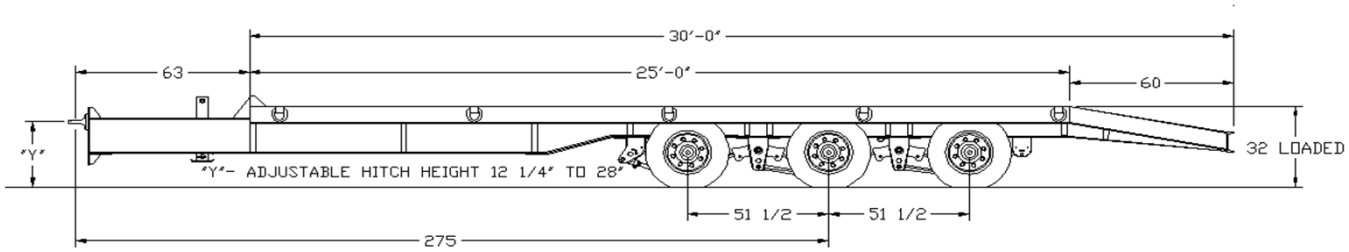

TK50LP TAG TRAILER

11203 - STANDARD EQUIPMENT
8'-6" wide deck
Pintle eye (adjustable height (12 1/4" to 28")
32" loaded deck height
(3) 22,500 lb. capacity axles
51.5" axle spacing
12 1/4" X 7 1/2" air brakes
4S2M ABS anti-lock brakes
Dual 6.75 x 17.5 8-hole disc wheels
(10) D-rings
5' ramps with spring assist
Maximum adjustable ramps
Safety chains with grab hooks
Lockable tool box
Head board
4" I-beam cross members on 12" centers
Registration holder
LED lights
Rubber mounted sealed lights with sealed harness system
Electrical system per DOT regulations
Red and white conspicuity markings
Paint: Trail King 2-part polyurethane

Item #	Description	20LP	24LP	40LP	50LP
	BASE MODEL				
11200	TK20LP TAG	13,420			
11201	TK24LP TAG		15,148		
11202	TK40LP TAG			20,829	
11203	TK50LP TAG				27,917

DECK LENGTH					
Standard Option					
11204	24' Deck (19' flat with 5' beavertail)	0	0		
Substitute Options					
11205	26' Deck (21' flat with 5' beavertail)	362			
11206	26' Deck (21' flat with 5' beavertail)		379		
Standard Option					
11207	26' Deck (21' flat with 5' beavertail, 5' ramps)			0	
Substitute Options					
11208	27' Deck (21' flat with 6' beavertail, 6' ramps)			278	
13086	27' Deck (22' flat with 5' beavertail, 5' ramps) (Pintle eye adjustable height approximately 16.75" to 25.75") Canadian RTAC compliant			730	
13087	28' Deck (22' flat with 6' beavertail, 6' ramps) (Pintle eye adjustable height (approximately 16.75" to 25.75") Canadian RTAC compliant			821	
Standard Option					
11209	30' Deck (25' flat with 5' beavertail), 5' tongue				0
Substitute Options					
13088	29' Deck (24' flat with 5' beavertail, 5' ramps) (Pintle eye adjustable height approximately 16.75" to 25.75") Canadian RTAC compliant				730
13089	30' Deck (24' flat with 6' beavertail, 6' ramps) (Pintle eye adjustable height approximately 16.75" to 25.75") Canadian RTAC compliant				775
LANDING GEAR					
Standard Option					
11334	12K HD jack with spring foot	0	0	0	0
Substitute Options					
11335	25k Single 2 speed	164	164	164	164
HITCH					
Standard Option					
13090	5' Tongue			0	0
Substitute Options					
13091	7' Tongue			164	164
TIE DOWNS					
Standard Option					
13092	5 Pair D-rings (main deck only)	0	0	0	0
Substitute Options					
13093	7 Pair D-rings (6 main deck, 1 beavertail)	82	82	82	82
DECKING					
Standard Option					
11215	1-1/2" Oak (raised)	0	0	0	0
Substitute Options					
11216	1-3/8" Apitong (raised)	1,112	1,112		
11217	1-3/8" Apitong (raised)			1,156	
11218	1-3/8" Apitong (raised)				1,310
BEAVERTAIL					
Standard Option					
11219	Self-cleaning beavertail (includes mudflaps)	0	0	0	0
Substitute Options					
11220	Wood-filled beavertail (no mudflaps)	-268	-268		
11221	Wood-filled beavertail (no mudflaps)			-258	
11222	Wood-filled beavertail (no mudflaps)				-234
RAMPS					
Standard Option					
11223	Ladder Style	0	0	0	0
Substitute Options					
11224	Wood Filled	311	311	311	311
SUSPENSIONS					
Standard Option					
11228	Dexter Slipper Spring		0		
Substitute Options					
11229	H9700 Spring Suspension		56		
Standard Option					
13131	H9700 Spring Suspension				0
Substitute Options					
12812	Air lift front axle (raises deck height 2")				2,424
BRAKES					
Standard Option					
11233	Electric brakes		0		
Substitute Options					
11234	Air Brakes with 4S2M ABS		2,324		

Item #	Description	20LP	24LP	40LP	50LP
	SPARE WHEEL				
Standard Option					
10058	No spare wheel	0	0	0	0
Substitute Options					
08204	6 x 16 steel disc wheel (per wheel)	60	60		
08205	6.75 x 17.5 8-hole steel disc wheel (per wheel)			158	158
	TIRE SIZE				
Standard Option					
07904	215/75R17.5 - 18 ply HTL2 (tire only) (per tire)			0	0
Substitute Options					
08133	235/75R17.5 - 18 ply HTL2 in lieu of STD 215/75R17.5 - 16 ply (per tire)			48	48
	SPARE TIRES				
Standard Option					
10059	No spare tire	0	0	0	0
Substitute Options					
08109	ST235/80R16 - 10 ply (tire only) (per tire)	132	132		
08110	235/75R17.5 - 18 ply HTL2 (tire only) (per tire)			347	347
08111	215/75R17.5 - 18 ply HTL2 (tire only) (per tire)			299	299
	MISCELLANEOUS				
Standard Option					
12809	Spare tire carrier on side of tongue	143	143	143	143
08569	DOT Inspection	147	147	147	147
13094	3/4" Traction aids on wheel covers	493	493	493	493
13095	3/4" Traction aids on beaver tail (bolt on over wood)	762	762	762	762
	PAINT				
Standard Option					
08024	Black S7203 with white decals (735-432-039)	0	0	0	0
08026	New CAT Yellow S7225 with black decals (735-434-018)	0	0	0	0
08029	Bright White with black decals (735-481-053)	0	0	0	0

CAPACITY RATINGS ARE FRAME CAPACITIES ONLY. ACTUAL LOAD CAPACITIES MAY BE RESTRICTED BY FACTORS SUCH AS GROSS AXLE WEIGHT RATINGS (GAWR) OR STATE AND FEDERAL REGULATIONS.
FEDERAL RETAIL EXCISE TAX MUST BE FIGURED ON THE SELLING PRICE WHEN SELLING TO A NON-EXEMPT END USER.

EFFECTIVE 1/15/15.

TRAIL KING CONSTRUCTION DIVISION

ALL RIGHTS RESERVED. TRAIL KING INDUSTRIES, INC., 2015

TRAIL KING INDUSTRIAL TILT TRAILER
TKT SERIES

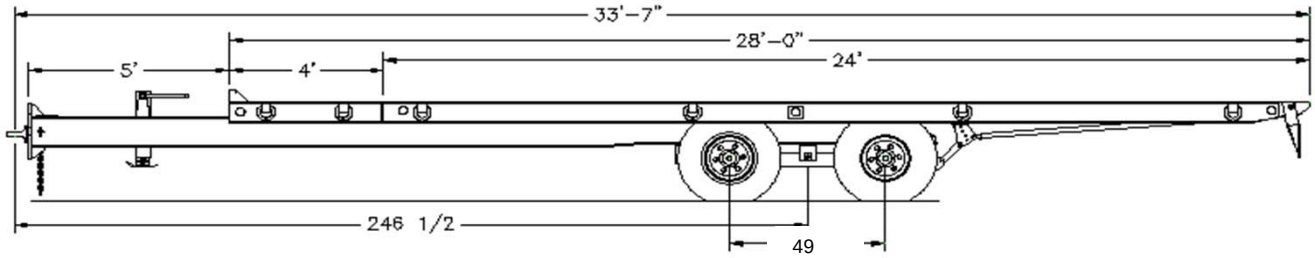

TKT24 Tilt Trailer

11329 - STANDARD EQUIPMENT
24,000 lbs. capacity
5' tongue
24' Tilt deck with 4' Stationary
102" wide
Pintle eye (adjustable height - 18 1/2 to 29 3/4")
33" loaded deck height
(2) 12,000 lb. capacity axles
Spring suspension
ST235/80R x 16 10-ply tires
Dual steel wheels
12,000 lb HD jack with spring foot
Tilted deck slope - 12 degree
3 1/2" X 16" platform cushioning cylinder

Safety chains with grab hooks
Floor plate on approach plate and fold under
11" fold-down approach plate and underride protection
Lockable tool box
Head board
I-beam cross members on 16" centers
Registration holder
LED lights
Rubber mounted sealed lights with sealed harness system
Electrical system per DOT regulations
3rd tail light package
Mudflaps
Red and white conspicuity markings
Paint: Trail King 2-part polyurethane

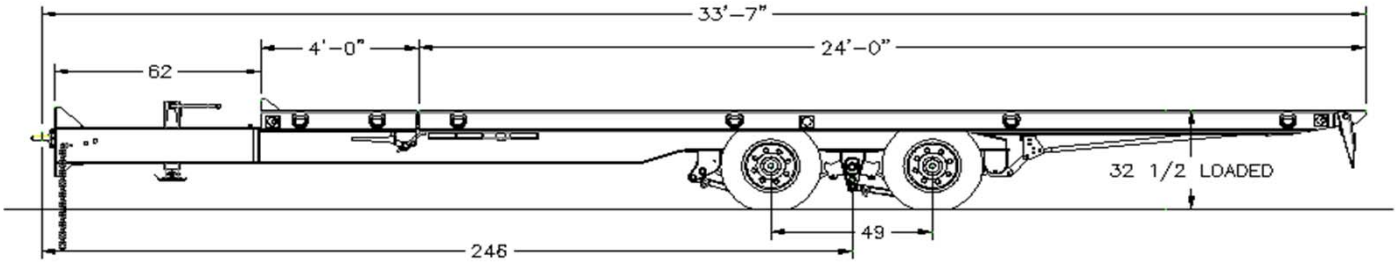

TKT40LP Tilt Trailer

11330 - STANDARD EQUIPMENT
40,000 lbs. capacity
5' tongue
24' Tilt deck with 4' Stationary
102" wide
Pintle eye (adjustable height - 15 to 30 3/4")
32 1/2" loaded deck height
(2) 22,500 lb. capacity axles
12 1/4' X 7 1/2" air brakes
4S2M ABS
Spring suspension
6.75 X 17.5 dual wheels
Tilted deck slope - 12 degree
(2) 3 1/2" X 16" platform cushioning cylinders

Safety chains with grab hooks
Floor plate on approach plate and fold under
11" fold-down approach plate and underride protection
Lockable tool box
Head board
I-beam cross members on 12" centers
Registration holder
LED lights
Rubber mounted sealed lights with sealed harness system
Electrical system per DOT regulations
3rd tail light package
Mudflaps
Red and white conspicuity markings
Paint: Trail King 2-part polyurethane

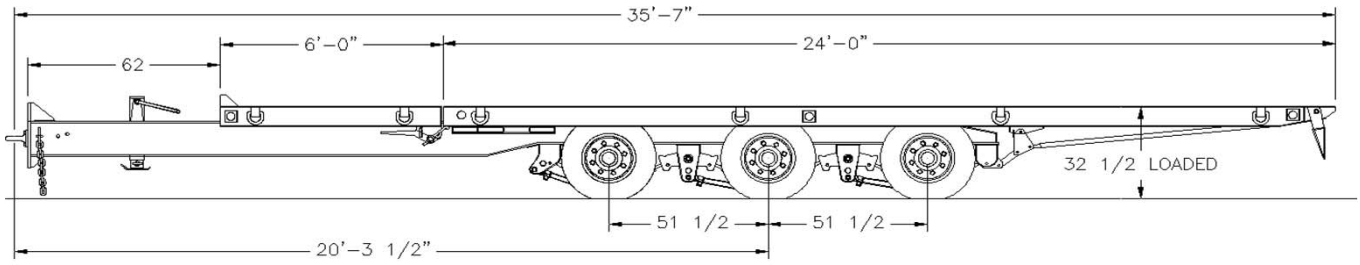

TKT50 Tilt Trailer

11331 - STANDARD EQUIPMENT
50,000 lbs. capacity
Pintle eye (adjustable height - 15 to 30 3/4")
4 bolt pintle eye with 20,000 lb vertical capacity and 100,000 lb. pull capacity
24' Tilt deck with 6' Stationary
102" wide
32 1/2" loaded deck height
(3) 22,500 lb. capacity axles
12 1/4' X 7 1/2" air brakes
4S2M ABS
Spring suspension, 51.5" axle spacing
6.75 X 17.5 dual wheels
Tilted deck slope - 12 degree
(2) 3 1/2" X 16" platform cushioning cylinders
Safety chains with grab hooks
Floor plate on approach plate and fold under
11" fold-down approach plate and underride protection
Lockable tool box
Head board
I-beam cross members on 12" centers
Registration holder
LED lights
Rubber mounted sealed lights with sealed harness system
Electrical system per DOT regulations
3rd tail light package
Mudflaps
Red and white conspicuity markings
Paint: Trail King 2-part polyurethane

Item #	Description	Price		
		TKT24	TKT40LP	TKT50
	BASE MODEL			
11329	TKT24 Tilt Trailer	20,836		
11330	TKT40LP Tilt Trailer		27,083	
11331	TKT50 Tilt Trailer			34,140
	HITCH			
Standard Option				
11332	5' tongue			0
Substitute Options				
11333	7' tongue			88
	LANDING GEAR			
Standard Option				
13103	12K HD jack with spring foot	0	0	0
Substitute Options				
13104	25k Single 2 speed		166	166
	TIE DOWNS			
Standard Option				
13096	6 Pair D-rings (2 stationary deck, 4 tilt deck)	0	0	0
Substitute Options				
13097	9 Pair D-rings (2 stationary deck, 7 tilt deck)	125	125	125
	DECK LENGTH			
Standard Option				
13098	28' Overall deck (4' stationary and 24' tilt deck)	0	0	
Substitute Options				
13099	28' Overall deck (4' stationary and 24' tilt deck) (Pintle eye adjustable height appoximately 17.5" to 26.5") Canadian RTAC compliant	970	970	
Standard Option				
13100	30' Overall Deck (6' stationary and 24' tilt deck)			0
Substitute Options				
13101	30' Overall Deck (6' stationary and 24' tilt deck) (Pintle eye adjustable height appoximately 17.5" to 26.5") Canadian RTAC compliant			970
13102	27'-6" Overall Deck (6' stationary and 21'-6" tilt deck) (Pintle eye adjustable height appoximately 17.5" to 26.5") Canadian RTAC compliant			923

Item #	Description	Price		
		TKT24	TKT40LP	TKT50
	DECK LOCK			
Standard Option				
11343	Manual lock	0	0	0
Substitute Options				
11344	Dual air locks operated with one switch (requires air brakes)	839	839	839
	DECKING			
Standard Option				
11345	1-1/2" Oak (raised)	0	0	0
Substitute Options				
11347	1-3/8" Apitong (raised)	1,132	1,132	
11348	1-3/8" Apitong (raised)			1,238
	BRAKES			
Standard Option				
11351	Air Brakes with 4S2M ABS	0	0	0
Substitute Options				
11352	Electric brakes	-674		
	SPARE WHEEL			
Standard Option				
10058	No spare wheel	60	60	60
Substitute Options				
08204	6 x 16 steel disc wheel (per wheel)	60		
08205	6.75 x 17.5 8-hole steel disc wheel (per wheel)		158	158
	TIRE SIZE			
07904	215/75R17.5 - 18 ply HTL2 (tire only) (per tire)		0	0
Substitute Options				
08133	235/75R17.5 - 18 ply HTL2 in lieu of STD 215/75R17.5 - 16 ply (per tire)		48	48
	SPARE TIRES			
Standard Option				
10059	No spare tire	132	132	132
Substitute Options				
08109	ST235/80R16 - 10 ply (tire only) (per tire)	132		
08110	235/75R17.5 - 18 ply HTL2 (tire only) (per tire)		347	347
08111	215/75R17.5 - 18 ply HTL2 (tire only) (per tire)		299	299
	MISCELLANEOUS			
Additional Options				
11353	Air operated approach plates (requires air brakes)	377	377	377
11356	(2) Oval strobe lights in tail channel with switch	232	232	232
12810	Spare tire carrier on side of tongue	144	144	144
12811	Air lift front axle (raises deck height 2")			2,454
08569	DOT Inspection	147	147	147
	PAINT			
Standard Option				
08024	Black S7203 with white decals (735-432-039)	0	0	0
08026	New CAT Yellow S7225 with black decals (735-434-018)	0	0	0
08029	Bright White with black decals (735-481-053)	0	0	0

* To meet 1997 federal requirements, Trail King offers two variations of the anti-lock braking system. The minimum 2S1M system is available, but Trail King recommends the 4S2M system.

CAPACITY RATINGS ARE FRAME CAPACITIES ONLY. ACTUAL LOAD CAPACITIES MAY BE RESTRICTED BY FACTORS SUCH AS GROSS AXLE WEIGHT RATINGS (GAWR) OR STATE AND FEDERAL REGULATIONS.
FEDERAL RETAIL EXCISE TAX MUST BE FIGURED ON THE SELLING PRICE WHEN SELLING TO A NON-EXEMPT END USER.

EFFECTIVE 1/15/15.

TRAIL KING CONSTRUCTION DIVISION

ALL RIGHTS RESERVED. TRAIL KING INDUSTRIES, INC., 2015

TRAIL KING UTILITY AND TILT UTILITY TRAILERS
TKU AND TKTU SERIES

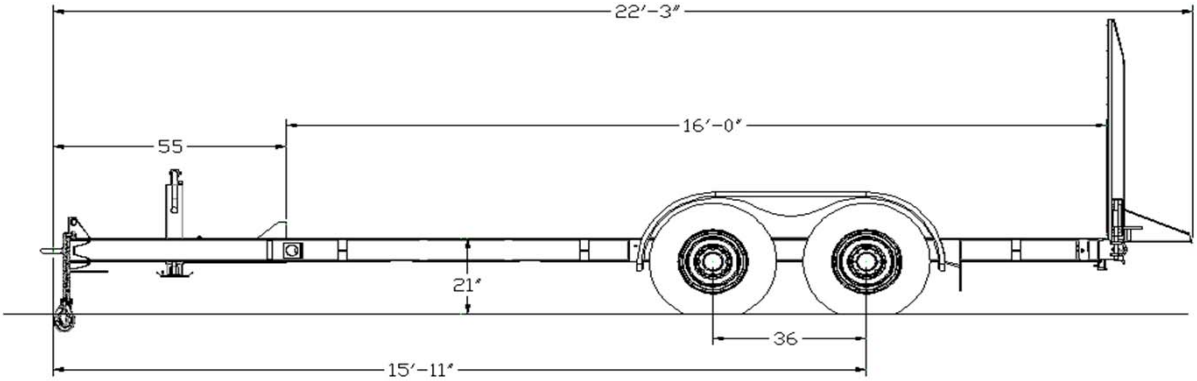

TK12U UTILITY TRAILER

11293 - STANDARD EQUIPMENT
12,000 lb. capacity
Single disc wheels (8 hole)
Adjustable coupler height (18 1/2 to 23")
ST235/80R X 16 10-ply tires
12" X 2" electric brakes on both axles
(2) 7000 lb capacity axles
36" axle spacing
12,000 lb HD jack with spring foot
102" overall width
82" width between fenders
Maximum adjustable spring assist ramps
6 tie down bars
Head board
Structural steel main frame
LED lights
Electrical system per DOT regulations
Breakaway switch (with battery)
Safety chains with hooks
Red and white conspicuity markings
Paint: Trail King 2-part polyurethane

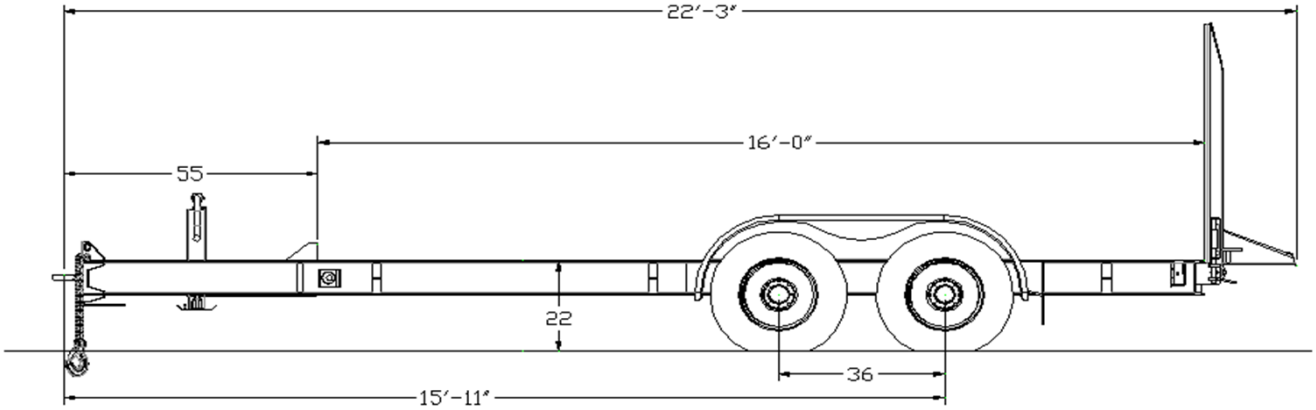

TK14U UTILITY TRAILER

11294 - STANDARD EQUIPMENT
14,000 lb. capacity
Single disc wheels (8 hole)
Adjustable coupler height (18 1/2 to 23")
215/75R X 17.5 18-ply tires
12" X 2" electric brakes on both axles
(2) 7000 lb capacity axles
36" axle spacing
12,000 lb HD jack with spring foot
102" overall width
82" width between fenders
Maximum adjustable spring assist ramps
6 tie down bars
Head board
Structural steel main frame
LED lights
Electrical system per DOT regulations
Breakaway switch (with battery)
Safety chains with hooks
Red and white conspicuity markings
Paint: Trail King 2-part polyurethane

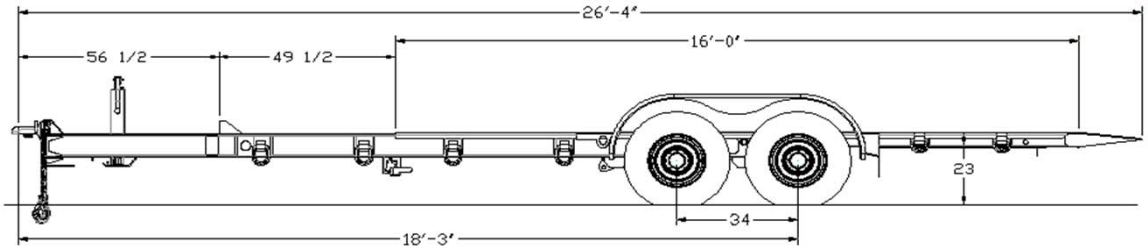

TKT12U TILT-UTILITY TRAILER

11295 - STANDARD EQUIPMENT
12,000 lb capacity
20' overall deck length
102" overall width, 82" wide deck between fenders
16' tilt deck with 4' stationary deck
(2) 7000 lb capacity axles
34" axle spacing
Single disc wheels (8 hole)
Adjustable coupler height (19 to 23-1/2")
ST235/80R X 16 10-ply tires
12" X 2" electric brakes on both axles
12,000 lb HD jack with spring foot
Structural steel main frame
Cushioning cylinders
11 degree load angle
Head board
Steel crossmembers
Star traction covered approach
6 pair D-rings, 2-stationary & 4-tilt deck
LED lights
Electrical system per DOT regulations
Breakaway switch (with battery)
Safety chains with hooks
Red and white conspicuity markings
Paint: Trail King 2-part polyurethane

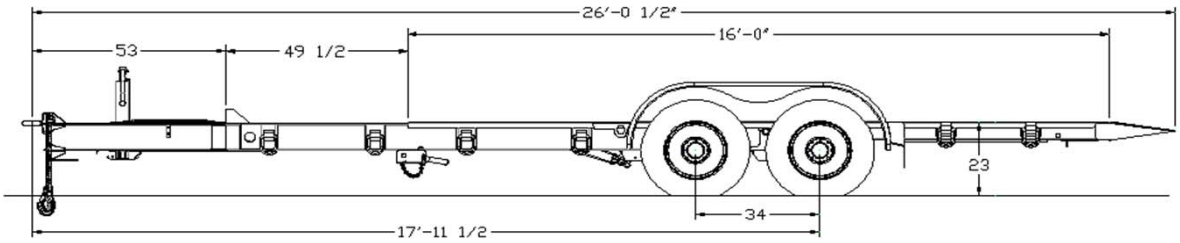

TKT14U TILT-UTILITY TRAILER

11296 - STANDARD EQUIPMENT
14,000 lb capacity
20' overall deck length
102" overall width, 82" wide deck between fenders
16' tilt deck with 4' stationary deck
(2) 7000 lb capacity axles
34" axle spacing
215/75R X 17.5 18-ply tires
Single disc wheels (8 hole)
Adjustable coupler height (16 to 22-3/4")
12" X 2" electric brakes on both axles
12,000 lb HD jack with spring foot
Structural steel main frame
Cushioning cylinders
11 degree load angle
Head board
Steel crossmembers
Star traction covered approach
LED lights
Electrical system per DOT regulations
Breakaway switch (with battery)
6 pair D-rings, 2-stationary & 4- tilt deck
Safety chains with hooks
Red and white conspicuity markings
Paint: Trail King 2-part polyurethane

Item #	Description	Price			
		Utilities		Tilt Utilities	
		TK12U	TK14U	TKT12U	TKT14U
BASE MODEL					
11293	TK12U Utility Trailer	7,063			
11294	TK14U Utility Trailer		8,774		
11295	TKT12U Tilt-Utility Trailer			9,548	
11296	TKT14U Tilt-Utility Trailer				11,131
HITCH					
Standard Option					
11297	2-5/16" ball coupler	0	0	0	0
Substitute Options					
11298	Pintle Eye	0	0	0	0
MAIN DECK					
Standard Option					
11300	16' Deck length (straight, no beavertail)	0	0		
Substitute Options					
11303	18' Deck length (straight, no beavertail)	148			
11304	20' Deck length (straight, no beavertail)		278		
DECKING					
Standard Option					
11307	1-1/2" Oak (raised)	0	0	0	0
Substitute Options					
11308	1-3/8" Apitong (raised)	703	703		
11309	1-3/8" Apitong (raised)			766	766
FLAPS, MUD GUARDS & FENDERS					
Standard Option					
11310	14 ga steel enclosed fenders	0	0	0	0
Substitute Options					
11311	3/16" Bolt-on Heavy Duty enclosed fenders	424	424		
11313	3/16" Bolt-on Heavy Duty enclosed fenders			423	423
RAMPS					
Standard Option					
11314	5' Ladder style (18" wide)	0	0		
Substitute Options					
11315	6' Ladder style with knife edge	63	63		
SPARE WHEEL					
Standard Option					
10058	No spare wheel	0	0	0	0
Substitute Options					
08204	6 x 16 steel disc wheel (per wheel)	60		60	
08205	6.75 x 17.5 8-hole steel disc wheel (per wheel)		158		158
SPARE TIRES					
Standard Option					
10059	No spare tire	0	0	0	0
Substitute Options					
08109	ST235/80R16 - 10 ply (tire only) (per tire)	132		132	
08111	215/75R17.5 - 18 ply HTL2 (tire only) (per tire)		299		299
ELECTRICAL					
Standard Option					
11318	7 Pole RV style electrical plug	0	0	0	0
MISCELLANEOUS					
Additional Options					
11320	Bolt-on lockable tool box lid	311	311	311	311
11323	Bolt-on fork holders (under deck, includes 2 pair of tie downs)	375	375	375	375
11327	Bolt-on spare tire carrier (on side of deck)	310	310	310	310

Item #	Description	Price			
		Utilities		Tilt Utilities	
		TK12U	TK14U	TKT12U	TKT14U
	PAINT				
Standard Option					
08024	Black S7203 with white decals (735-432-039)	0	0	0	0
08026	New CAT Yellow S7225 with black decals (735-434-018)	0	0	0	0
08029	Bright White with black decals (735-481-053)	0	0	0	0

* To meet 1997 federal requirements, Trail King offers two variations of the anti-lock braking system.
The minimum 2S1M system is available, but Trail King recommends the 4S2M system.

CAPACITY RATINGS ARE FRAME CAPACITIES ONLY. ACTUAL LOAD CAPACITIES MAY BE RESTRICTED BY FACTORS SUCH AS GROSS AXLE WEIGHT RATINGS (GAWR) OR STATE AND FEDERAL REGULATIONS.
FEDERAL RETAIL EXCISE TAX MUST BE FIGURED ON THE SELLING PRICE WHEN SELLING TO A NON-EXEMPT END USER.

EFFECTIVE 1/15/15.

TRAIL KING CONSTRUCTION DIVISION

ALL RIGHTS RESERVED. TRAIL KING INDUSTRIES, INC., 2015