C-105-12
Supersedes C-105-11R
and C-105-11

CONFIDENTIAL

E. D. ETNYRE & CO.

ETNYRE PRICE LIST

Effective October 1, 2011

SALES OFFICE:
E. D. ETNYRE & CO.
1333 So. Daysville Road
Oregon, IL 61061-9778
Phone: 815/732-2116
1-800-995-2116
Fax: 815-732-7400
Web Site: www.etnyre.com
E Mail: sales@etnyre.com

INDEX

Model	Price Sheet No.	Page No.
Distributors		
Black-Topper® Centennial	C-101-12	7
Maintenance Distributors	C-401-12	13
Chipspreaders		
Hydrostatic Drive	C-202-12	15
Flusher	C-801-12	17
Sprinkler	C-901-12	19
Pumping Unit	C-601-12	21
Vertical Asphalt Emulsions Storage Tank	C-501-12	23

General Truck Requirements 10
Truck Information 11
Etnyre Warranty 27

E. D. ETNYRE & CO., Oregon, Illinois 61061-9778
1333 South Daysville Road • Phone: 815/732-2116 • Fax: 815/732-7400

PRICE SHEET NO. C-101-12 Effective October 1, 2011
Supersedes C-101-11R and C-10111

All Prices F.O.B. Destination
U.S. Dollars

BITUMINOUS DISTRIBUTOR
Black-Topper®
CENTENNIAL

STANDARD EQUIPMENT

A. TANK & ACCESSORIES
- TANK: Meets Department of Transportation regulations 49 CFR 173.247. Oval cross section. Full dished surge plates with staggered openings to reduce surging. Heads deep dished and flanged, welded inside and out. 2" fiberglass insulation and aluminum jacketing with aluminum dished heads.
- MANHOLE: Meets Department of Transportation regulations. 20" diameter manhole with internal overflow, manhole platform and ladder, spill collar with external drain and rollover protection.
- TANK GAUGE: Ball float type with dial. Calibration in 50 gallon increments. Low level indicator in cab.
- THERMOMETER WELL.
- LIQUID SAMPLING VALVE. In hot well.
- PENCIL THERMOMETER.
- ALUMINIUM FENDERS.

B. CIRCULATING SYSTEM
- FILL LINE with quick connecting coupler.
- REAR SUCTION VALVE: Air opened, air/spring closed.
- ASPHALT PUMP: 400 G.P.M.
- 4 WAY ASPHALT VALVE: Auto control.
- DISTRIBUTING LINES: Steel pipe with ball joints and 'O" ring seals, from circulating system to spray bar.
- "VACU-FLO" SUCKBACK SYSTEM: suck back of entire system.
- SUCTION STRAINER: for asphalt pump.
- SELF FLUSHING LINE: from fuel tank to fill line, to clean asphalt pump, valve and circulating system.
- HANDSPRAY SYSTEM: 25' x 3/4" flexible hose and lightweight gun with cold handle.

C. SPRAYBAR
- 12' SPRAY BAR (8' center section with two 1' non-removable folding wings and two 1' removable sections).
- CONTROLS: Electric-air on-off in 1' increments.
- ELECTRIC-HYDRAULIC POWER LIFT, SHIFT AND WING FOLDING, switches front and rear.
- SPRAY VALVES: valves on 4" centers with quick release flip levers.
- NOZZLES: V-slot brass nozzles. Choice of size.
- SAFETY BREAKAWAY wing sections.
- BAR LATCHES for travel, manual.

D. POWER SYSTEM
- CRANKSHAFT DRIVEN HYDROSTATIC PUMP driving piston motor with gearbox, direct coupled to 400 G.P.M. asphalt pump.

E. CONTROLS/INSTRUMENTATION
- In cab computer control with digital readout.
- In cab circulate/spray control.
- Powered controls for main tank valve.
- Rear suction valve and master power controls.
- Radar ground speed measurement.
- Tank "Low Level" indicator light in control panel.

F. HEATING SYSTEM
- One flue with LPG burner. Includes 52 gallon L.P. tank, frame mounted.

G. MISCELLANEOUS ACCESSORIES
- STORAGE HOOKS for Hand Spray hose.
- TOOL BOX: Side opening with flush type lock.
- SPECIAL TOOLS.
- MEASURING STICK. Aluminum, 50 gallon increments.
- LIGHTS: Federal Standard 108, wiring in loom.
- PAINT: Black enamel all steel parts.
- HOSE TROUGH for 12' loading hose.

Rated Capacity U.S. Gallons	List Price	U.S. Fed Excise Tax
1,000	$73,600.00	$ -----
1,250	74,850.00	-----
1,500	75,550.00	-----
1,750	75,950.00	-----
2,000	76,550.00	-----
2,250	77,300.00	1,992.00
2,500	78,350.00	2,116.00
3,000	81,200.00	2,462.00
3,500	84,975.00	2,913.00
4,000	92,750.00	3,846.00
4,500	94,750.00	4,087.00

For larger capacities apply to factory for price.
For special sizes use price of next larger standard size.

OPTIONAL EQUIPMENT

	List Price	U.S. Fed. Excise Tax
A. TANK & ACCESSORIES		
1. Manhole Strainer, 6"	$ 130.00	$16.00
2. Manhole Strainer, 20"	240.00	29.00
3. Dial Thermometer, 2"	90.00	
4. Dial Thermometer, 4"	150.00	
5. Dual scale stick and dial (metric and English)	300.00	
6. Cone Type Strainer in Fill Line	110.00	
B. CIRCULATING SYSTEM		
1. Front Tank Suction (in addition to rear)	2,100.00	
2. Power wash down system	495.00	
3. Hose reel for power wash down hose (spring rewind)	600.00	
C. SPRAY BAR		
1. Standard 12' spray bar with 1' electric/air on-off controls	STD	
a. Bar extensions with 1' electric/air on-off (24' maximum bar width), per foot	500.00	
b. 12' gang bar (in lieu of electric/air on-off in 1' increments).	**DEDUCT (1,800.00)**	
c. Bar extensions for bar with gang on-off, per foot	315.00	
d. Extra pair of folding bar joints, requires minimum 16' bar	4,625.00	
e. Power bar latch with cab and rear control	550.00	
2. Variable width spraybar, 18'. Width hydraulically adjustable with (2) 8' center sections and (2) 1' folding wing sections (includes air bar latch)	13,200.00	
a. Bar extensions for variable width bar (24' max. bar width), per foot	1,280.00	
3. "Big bar" 12' spray bar with 1' electric/air on-off controls. Larger cross section (recommended for use with hotter or hard to handle products)	1,000.00	
a. Bar extensions for big bar with 1' electric/air on-off (24' max bar width), per foot	525.00	
b. Heavy duty air lines, braided (LPG style) from MAC valves to bar cylinders with JIC reuseable fittings	1,500.00	
c. Extra pair of folding bar joints, requires minimum 16' bar	4,625.00	
d. Power bar latch with cab and rear control	550.00	
4. Miscellaneous Spray Bar Options		
a. Provisions for later addition of bar extensions with 1' controls, per foot	170.00	
b. Nozzles, extra, per foot (state size)	15.00	
c. Bar end markers (C1 & C3 bars only)	800.00	
D. SEVERE SERVICE OPTIONS		
1. H.D. Hydraulic Pump (4.57 CID)	1,925.00	
2. H.D. Hydraulic Pump (6.1 CID)	2,800.00	
3. Hydraulic Oil Cooler.	850.00	
4. Manifold Style 1' Control valves.	1,800.00	
5. Heated pump (from truck cooling system).	1,800.00	
6. Heated pump, sump and drop tubes (from truck cooling system).	2,675.00	
E. POWER SYSTEM		
1. PTO off transmission in lieu of crankshaft drive (Price includes PTO)	560.00	
2. Flywheel PTO (chassis must be set-up with provisions)	560.00	
F. CONTROLS/INSTRUMENTATION		
1. Electric analog gauges in lieu of computer control with digital readout	**DEDUCT [2,100.00]**	
2. Liquid asphalt temperature digital readout in computer display window	395.00	
3. USB port for customer's lap top computer (for printing)	500.00	
4. Additional display in rear control box	500.00	
G. HEATING SYSTEM		
1. No flue or burner in lieu of one flue with LPG burner and 52 gallon L.P. tank.	**DEDUCT [1,800.00]**	
2. Two flues with LPG burners. Includes 52 gallon L.P. tank, frame mounted.	880.00	
3. One flue with high pressure fuel oil burner (includes auto ignition and outfire) in lieu of standard	425.00	
4. Two flues with high pressure fuel oil burner (includes auto ignition and outfire) in lieu of standard	1,325.00	
6. Outfire protection for LPG burners	1,390.00	
7. Automatic Controls: Thermostatic shutdown control, out-fire protection and pushbutton ignition. For Propane Burners	2,460.00	
8. Auto controls for fuel oil burners, thermostatic controlled shut down, brake interlock	635.00	

OPTIONAL EQUIPMENT

	List Price	U.S. Fed. Excise Tax
9. Portable burner, kerosene or LPG (Specify)	480.00	
G. HEATING SYSTEM continued		
10. Electric Belly Heat - 220V or 440V, 3 phase, with thermostat to maintain heat	6,000.00	
11. Chassis Driven Hydraulic/Electric Generator for electric belly heat (above)	6,000.00	
H. MISCELLANEOUS ACCESSORIES		
1. 12' x 3" steel fill hose (450º)	400.00	48.00
1a.12' x 3" rubber fill hose (350º)	400.00	48.00
2. Power right side 4-way mirror (when truck design permits)	475.00	
3. L.E.D. Lights, sealed system	500.00	60.00
4. Special paint - P.O.R. (Price On Request. Contact factory.)	P.O.R.	
5. Skid mounting (Domestic)	1,000.00	
6. Handspray hose reel	1,000.00	
7. Aluminum handspray gun with swivels (in lieu of standard)	240.00	
8. 3" Cam Lock Fittings	225.00	
9. Export processing:		
Skid mounted (includes Export Skid)	1,800.00	
Truck mounted	700.00	
10. Back up alarm.	125.00	15.00
11. Wet storage box with drain plug and hinged lid	300.00	
12. Strobe Light mounted on top front of tank	500.00	

Spray Bar Nozzle Chart

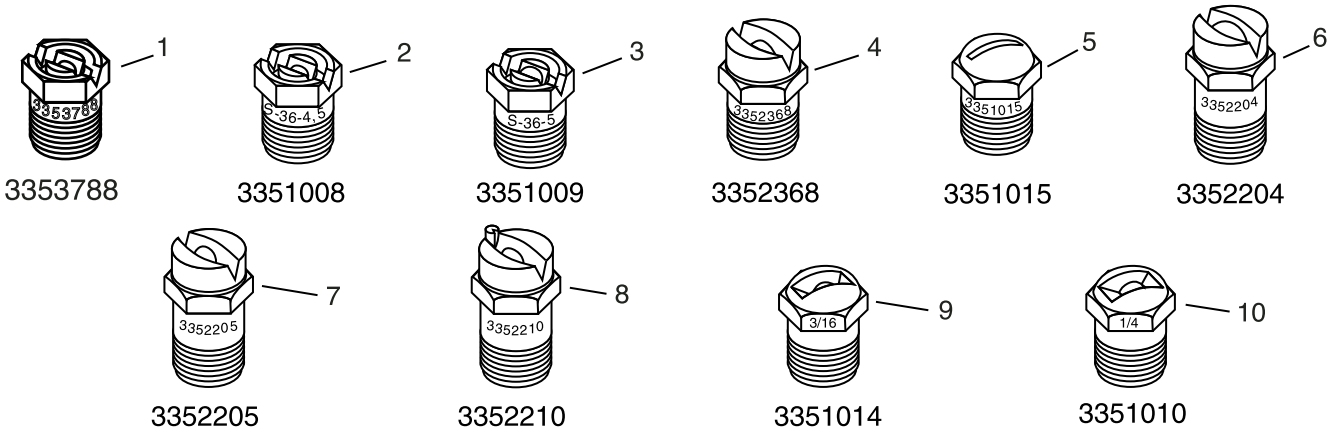

Ref.	Part No.	Description	Application Per Square Yard	Application (Metric) Liters Per Square Meter	Flow Gallons Per Minute Per Foot
1	3353788	V Slot Tack Nozzle	.05 – .20	.19 – .75	3.0 to 4.5
2	3351008	S36-4 V Slot	.10 – .35	.45 – 1.60	4.0 to 7.5
3	3351009	S36-5 V Slot	.18 – .45	.82 – 2.00	7.0 to 10.0
4	3352368	Multi-Material V Slot	.15 – .40	.68 – 1.80	6.0 to 9.0
5	3351015	3/32” Coin Slot	.15 – .40	.68 – 1.80	6.0 to 9.0
6	3352204	Multi-Material V Slot	.35 – .95	1.60 – 4.30	12.0 to 21.0
7	3352205	Multi-Material V Slot	.20 – .55	.90 – 2.50	7.5 to 12.0
8	3352210	End Nozzle (3352205)	.20 – .55	.90 – 2.50	7.5 to 12.0
9	3351014	3/16” Coin Slot	.35 – .95	1.60 – 4.30	12.0 to 21.0
10	3351010	1/4” Coin Slot	.40 – 1.10	1.80 – 5.00	15.0 to 24.0

GENERAL TRUCK REQUIREMENTS BY TANK SIZE

Nominal Gallonage	Tank Oval Size	Useable c.a./c.b.	Front G.A.W.R.	Rear G.A.W.R.	Total G.V.W.R.
1000	47x78x104	84"	8,100	17,500	25,600
1250	47X78X122	102"	9,000	17,500	26,500
	47X78X128	108"			
1500	53X88X122	102"	9,000	19,000	28,000
	50X83X134	108"			
	47X78X146	120"			
	47X78X152	126"			
1750	59X89X122	102"	10,000	21,000	31,000
	53X88X137	108"			
	53X88X140	120"			
	50X83X152	126"			
2000	53X88X146	120"-126"	12,000	21,000	33,000
	59X89X140	120"	12,000	21,000	33,000
2250	59X89X158	102-108"c.b. (tandem)	14,600	23,000	37,600
2500	59X89X176	120-126"c.b. (tandem)	12-14,000	34,000	46,000
3000	65X90X186	132-138"c.b. (tandem)	16,000	34,000	50,000
3500	70X92X182	132-138"c.b. (tandem)	16,000	40,000	56,000
4000	70X92X212	152" c.b. (tandem)	18,000	44,000	62,000

Truck Information*

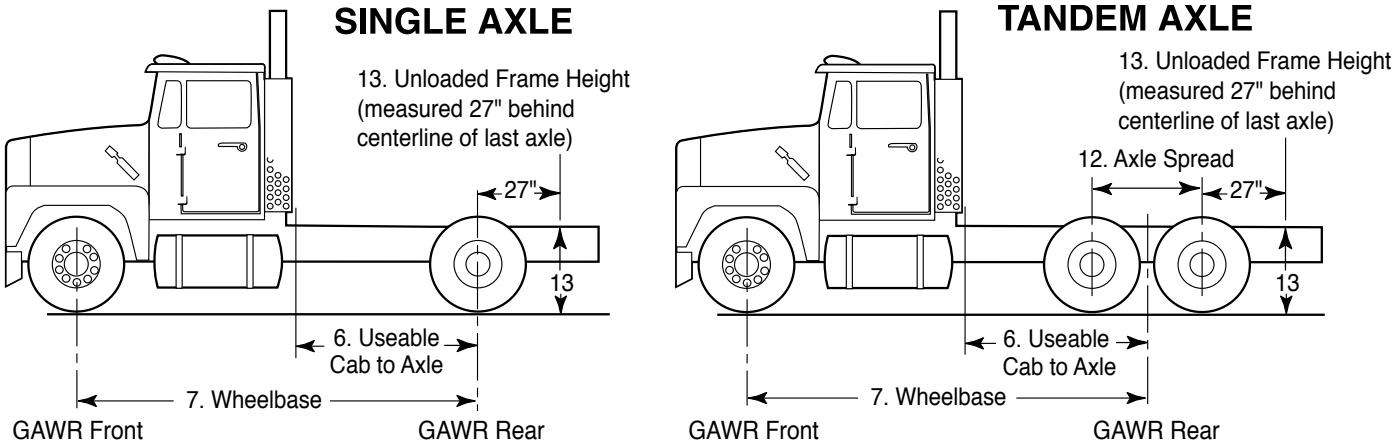

The following information is vital and necessary in the design of a new distributor. The correct weight factors will enable us to prepare a weight analysis prior to the actual assembly of this unit. Please return this form with all pertinent blanks properly completed.

1. Truck Make: _____ Model _____ Year: _____
2. Engine: Make _____ Model _____
3. Transmission: Make _____ Model _____
4. Rear Axle Ratio(s) _____ / _____
5. Brakes: Air _____ or Hydraulic _____
6. Cab to Axle: Single rear axle _____ " Useable
   Tandem rear axle _____ " Useable
   (Measured from back of cab or stack to centerline of bogie)
7. Wheelbase _____ "
7a. Frame Width _____ "
7b. Unloaded Frame Height _____ " (Measured 27" behind centerline of last axle)
8. Axle Spread _____ "
9. Tire Size: Front _____ x _____ , _____ Ply Rating
   Rear _____ x _____ , _____ Ply Rating
10. **Gross Axle Weight Rating (GAWR) Front _____ Lbs.
    **Gross Axle Weight Rating (GAWR) Rear _____ Lbs.
    Gross Axle Weight Rating (GAWR) Lift Axle _____ Lbs (if applicable)
11. **Gross Vehicle Weight Rating (GVWR) _____ Lbs.
12. Actual Scale Weight: Front _____ Lbs. Rear _____ Lbs.
13. Is truck set up with front P.T.O. provisions, including stationary grille and adapter plate? _____
13a. PTO Rotation _____ PTO Speed _____ PTO Location _____
14. Estimated truck delivery to Etnyre factory _____
15. Name and phone number of truck dealer _____
    _____

* Required for all used trucks. For new trucks, please provide manufacturer's order detail.
** Obtain from Incomplete Vehicle Document in new truck or from chassis manufacturer.

E. D. ETNYRE & CO., Oregon, Illinois 61061-9778
1333 South Daysville Road • Phone: 815/732-2116 • Fax: 815/732-7400

Price Sheet No. C-401-12 Supersedes C-401-11	**Effective October 1, 2011**	**Maintenance Distributor** TRAILER OR SKID MOUNTED
All Prices F.O.B. Destination U.S. Dollars		

STANDARD EQUIPMENT

TRAILER MOUNTED UNIT:

- Trailer consists of structural channel frame, adjustable 2 1/2" pintle eye, tandem axles on spring suspension, four LT235/85 R16 (E) tires on disc wheels, crank type jack, electric brakes with breakaway feature and safety chains with hooks, steel fenders, 7 pin electrical connector.

Tank:

- Tank construction is a steel shell and full section surge plates, 2" fiberglass insulation covered with aluminum jacketing.
- Manhole: Meets HM-198A/HM 183 DOT hot asphalt requirements. 20" diameter manhole with spill collar and rollover protection.
- Tank thermometer 50° - 400° F. pencil type.
- Dipstick, indicates flue coverage.

Circulating System:

- Circulating system includes manual suction valve, removable strainer in pump suction line, and a 20 gallon flushing oil tank with line to asphalt pump. System includes all valves for loading, circulating in the tank, handspraying and unloading, and suck back system for entire circulating system including spray bar when so equipped..

Heating System:

- Heating flue(s) equipped with LPG burner(s). Includes a bottle rack for two 100# bottles.

Power Unit:

- Power unit is a Briggs and Stratton 18 H.P. air cooled gas engine with electric starter, alternator, battery and 10 gallon fuel tank. Includes hydraulic pump, motor and valves for asphalt pump drive. Standard engine will deliver 80 GPM, optional engine required to achieve 200 gallon per minute.

Spray Bar:

- 8' Full circulating spray bar. Fixed height, non shifting, non folding, electric-hydraulic gang on/off with manual flip valve nozzle every 4". Includes spray bar on/off switch in control panel on a 20' electrical cord to reach the chassis cab for trailers, mounted in cab for truck mounts.

Asphalt Pump:

- Asphalt pump is 200 GPM, hydraulic motor driven. Asphalt pumping system has a built-in relief valve for safety.
- Electric analog G.P.M. asphalt pump tachometer.

Miscellaneous:

- Miscellaneous items include 25' rubber hand spray hose and gun, flanged steel fenders, FMVSS-108 lights and wiring, electrical connection for towing vehicle and steel parts painted black.

Capacity	Shell Gauge	Axle Rating	Heating Flue and Burner	Trailer	Skid For Truck Mounting	Truck Mounting at Factory
600	12g	5000#	1	$34,070.00	$30,800.00	$32,100.00
1000	10g	6000#	1	$39,425.00	$35,880.00	$37,180.00
1500	10g	—	2	Not Available	$41,850.00	$43,125.00
2000	10g	—	2	Not Available	$44,600.00	$45,925.00

OPTIONAL EQUIPMENT

	List Price
Tank:	
B1. - Tank gauge float type with indicator in 50 gallon increments	750.00
B2. - Sample Valve/Gravity Drawoff, 3/4".	180.00
B4. - Thermometer 2" dial type in addition to standard pencil type	90.00
B6. - Manhole strainer, 20".	240.00
B7. - Manhole strainer, 6".	130.00
Heating System:	
C3. - (1) Fuel oil burner, electric driven fuel pump and blower, auto ignition, 500,000 BTUs in lieu of LPG (Includes 8" flues)	425.00
C4. - (2) Fuel oil burners, electric driven fuel pump and blower, auto ignition, 500,000 BTUs in lieu of LPG (Includes 8" flues) (Available on 1500 & 2000 gallon tanks only)	650.00
C11. - 52 gallon frame mounted LPG tank in lieu of bottle racks (Available on truck mounted - skid units only)	400.00
C12. - 100# LPG bottle - two required -- price each.	300.00
Power Unit:	
D1. - Wisconsin model VH-4D four cylinder air-cooled gasoline engine, electric starter, alternator and battery, 30 H.P. (in lieu of standard engine)	6,000.00
D2. - Hatz 2G40 two cylinder air-cooled diesel engine, electric starter, alternator and battery, 22 H.P. (in lieu of standard engine)	6,000.00
D4. - Radar ground speed indicator with readout in cab control panel	1,850.00
Spray Bar:	
E1. - 10' Full circulating spray bar consisting of 8' center section with (2) 1' folding non removable sections with breakaway feature. Height adjustable non shifting with manual wing fold. Electric-hydraulic gang on/off with manual flip valve nozzle control every 4".Includes spray bar on/off switch in control panel on a 20' electrical cord to reach the chassis cab for trailer units, mounted in cab for truck mounts.	2,400.00
E2. - 10' full circulating spray bar consisting of 8' center section with (2) 1' folding non removable sections with breakaway feature. Hydraulic power lift and shift with manual wing fold. Electric-hydraulic gang on/off with manual flip valve nozzle control every 4". Includes spray bar on/off and lift/shift switches in control panel on a 20' electrical cord to reach the chassis cabfor trailer units and mounted in cab for truck mounts.	4,500.00
E3. - Spray bar extensions (each 1') (maximum 16')	340.00
E4. - Spray bar delete - no spray bar provided.	(2,650.00)
Miscellaneous	
H1. - Tool box steel (6" x 10" x 30") with hasp for padlock	260.00
H2. - Measuring stick, aluminum 50 gallon increments	175.00
H3. - Loading hose, 12' x 3" flexible steel including male fitting each end	400.00
H6. - 3" Cam lock fittings	225.00
H8. - Export processing.	
Truck or trailer mounted	620.00
Skid mounted.	1,700.00
H9. - Back up alarm (truck mounted units only).	125.00
H10. - Ladder to manhole.	170.00

E. D. ETNYRE & CO., Oregon, Illinois 61061-9778
1333 South Daysville Road • Phone: 815/732-2116 • Fax: 815/732-7400

Price Sheet No. C-202-12 Effective October 1, 2011
Supersedes C-202-11

All Prices F.O.B. Destination
U.S. Dollars

SELF-PROPELLED CHIPSPREADER
FRONT WHEEL HYDROSTATIC DRIVE

STANDARD EQUIPMENT

Etnyre front wheel Hydrostatic Drive, Self-Propelled Chipspreader with computer control application rate and speed control, dual control station with manual sliding console/seat assembly, and including:

POWER TRAIN:
Cummins model QSB turbocharged diesel engine (240 H.P.), single speed hydrostatic 25000# front axle, drive system, 25000# rear axle,
all wheel power brakes,
385/65R22.5-J tubeless, radial tires, wide base

AGGREGATE HANDLING SYSTEM:
(2) 24" hydraulically driven conveyors,
10' front spread hopper with hydrostatic driven spread roll,
automatic conveyor control, including conveyor belt speed control,
electric-hydraulic truck hitch control
folding wings @ recieving hopper

MISCELLANEOUS:
L.E.D. light package, electric horn,
electric back up alarm bell,
electric tachometer, hourmeter,
engine warning system (low oil, water),
12 volt power plug (cigar lighter style),
vandalism protection package,
front fenders and all other standard equipment per current brochure . . .

	List Price
Etnyre self-propelled hydrostatic drive ChipSpreader including all standard equipment	$153,100.00

OPTIONAL EQUIPMENT

AGGREGATE HANDLING SYSTEM.

A. FIXED HOPPER. Standard fixed hoppers include individual gates. Hydrostatic drive spread roll and agitator.
To replace 10' spread hopper with larger spread hopper add:

	Width	Shipping Weight	
A1.	11' (3.36 m)	(2,380 pounds)	$ 750.00
A2.	12' (3.66 m)	(2,530 pounds)	1,250.00
A3.	13' (3.96 m)	(2,670 pounds)	1,750.00
A4.	14' (4.27 m)	(2,820 pounds)	2,250.00
A6.	Second Agitator		1,850.00

B. VARIABLE HOPPER

Variable width two section hopper system. Including driven dual augers and spread rolls. Independent conveyor feed to each hopper. Hydraulic system with all pumps, hoses, valves and control system necessary for operation. Operating controls at both driver and right front operator stations. Expanded metal in top of hopper with replaceable grates under conveyor hoods. Installed on Hydrostatic Drive Chipspreader at time of new order production. Price in lieu of standard 10' spread hopper.

B2. HOPPER: 9'/18' Variable width from 9' to 18' includes air gates	$66,100.00
B3. HOPPER: 10'/20' Variable width from 10' to 20' includes air gates	$67,700.00
B4. HOPPER: 11'/22' Variable width from 11' to 22' includes air gates	$69,300.00
B5. HOPPER: 12'/24' Variable width from 12' to 24' includes air gates	$70,900.00
B6. Electric vibrators: for variable hopper (includes (1) for each side)	$3,000.00
B7. Electric vibrators: for fixed hopper, single vibrator	$2,100.00

List Price

C. DRIVE SYSTEM

C1. 4-WHEEL HYDROSTATIC DRIVE PACKAGE: Mechanical front wheel drive steer axle, full oscillating, 75" wheel track, 20.37:1 gear ratio, 25,000# rated, single speed. Mechanical drive rear axle, 95" wheel track, 20.37:1 gear ratio, 25,000# rated, single speed. Differential. Both axles driven by 125 cc variable displacement hydrostatic pump and variable displacement hydrostatic motors. Infinitely variable speed 0 to 19.5 M.P.H.. ..... $34,300.00

C2. "Big" Chipspreader package - includes 280 HP Cummins QSL engine, 30" conveyor belts, extra capacity front and rear hoppers, 425/65R22.5-L tires, increased spread hopper gate opening, 14" diameter hopper auger, hydraulically adjustable height spread hopper. (Available on 4-wheel drive only). 30,000.00

D. CONTROLS / INSTRUMENTATION

D1. POWER SEAT PEDESTAL: Power controls to move operator's station right or left side of unit 2,450.00

D2. Operator's Cab - fully enclosed with A/C and heat (includes power seat pedestal) 20,000.00

D3. Umbrella 400.00

D4. Awning 870.00

D3. Shade Canopy 2,800.00

D3. Hydraulic Canopy 8,900.00

D7. Strobe light mounted on telescopic stand 500.00

D8. Corner LED Strobe Lights (at all 4 corners) 500.00

D9. 2 Wire Radio Plug at operator's station 100.00

E. MISCELLANEOUS

E1. PAINTING: Special colors (Paint specifications must accompany order) ..... P.O.R.

E2. EXPORT PROCESSING 1,000.00

E3. Transport Dolly - single axle, self loading (front wheel)..... ..... 15,000.00

E4. Full length Conveyor Flashing. 750.00

Fixed Hopper:

- All gates powered; controlled at operator's station.
- Hoppers include (8) 6" gates; (4) each side.

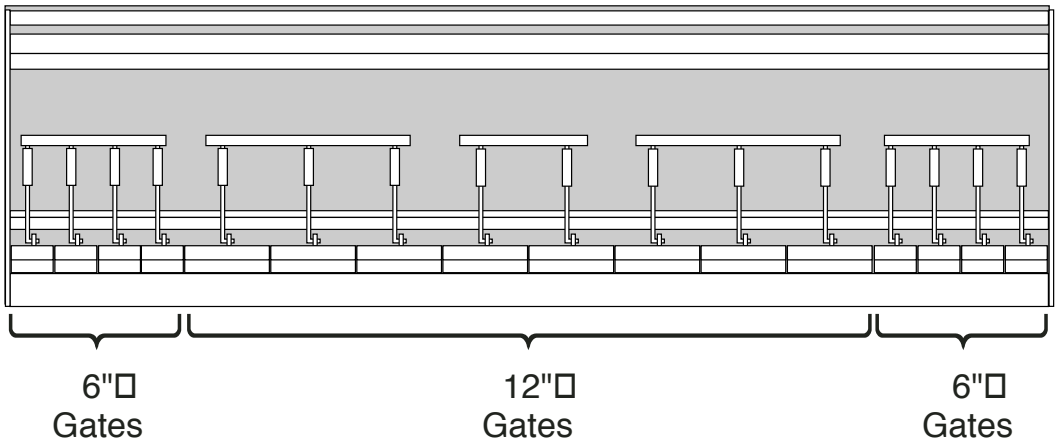

C-202

E. D. ETNYRE & CO., Oregon, Illinois 61061-9778
1333 South Daysville Road • Phone: 815/732-2116 • Fax: 815/732-7400

Price Sheet No. C-801-12 **Effective October1, 2011**
Supersedes C-801-11

All Prices F.O.B. Destination
U.S. Dollars

STREET FLUSHER
WITH HYDROSTATIC DRIVEN WATER PUMP

STANDARD EQUIPMENT

TANK:
10. ga. steel tank (non-skirted) with full section 10 ga. surge plates,
20" manhole with quick release cover,
4" overflow,
2 1/2" filling intake with strainer and anti-siphon dome,
full level indicator light,
5" sump with 3" non-corroding drain plug,

PUMPING SYSTEM:
750 G.P.M. centrifugal water pump,
crankshaft driven hydrostatic pump drive system,
three high-velocity brass spray nozzles,
automatic water system control,
indicator light,
pressure gauges,
and controls in cab

MISCELLANEOUS:
low water level indicator light,
2 1/2" x 16' fill hose,
FMVSS-108 lights and wiring,
full width rear channel bumper,
full width rear fenders,
drain cocks for complete drainage,
interior coating - epoxy,
outside paint--primer and 2 coats white

and all other standard equipment per current brochure . . .

(No Skirting Included)

Capacity U.S. Gallons	Truck Chassis	List Price	U.S. Fed. Excise Tax
1900	120" — 126" C.A.	44,200.00	--
2200	120" — 126" C.A.	44,700.00	--
2500	120" — 126" C.A.	45,275.00	1,610.00
2700	120" — 126" C.B. (tandem)	45,850.00	1,685.00
3000	120" — 126" C.B. (tandem)	47,300.00	1,855.00
3500	120" — 126" C.B. (tandem)	48,175.00	1,960.00

C.A. = Cab to rear axle center line
C.B. = Cab to center of tandem axle
Note: Truck Mounting included in all List Prices

OPTIONAL EQUIPMENT

	List Price	U.S. Fed. Excise Tax
1A. ENGINE DRIVEN WATER PUMP: John Deere 4045D, 80 hp diesel engine	$10,000.00	--
1B. ENGINE DRIVEN WATER PUMP: Kubota V3600-T-83B, 84 hp diesel engine	$8,000.00	--
2A. STREAMLINE SKIRTING: Continuous sheet metal enclosure provided on sides and at rear covering most working components. Access doors provided on left side, and/or right side when required for access to chassis components.)	6,000.00	720.00
10A. FIRE FIGHTING VALVE: 2 1/2" Underwriters approved valve with N.S.T. threads. Connected to pump discharge header	575.00	--
11A. HYDROSTATIC PUMP DRIVE off truck transmission	575.00	--
14A. FOURTH FLUSHING NOZZLE: Additional flushing nozzle with required valve and control. Fourth nozzle to be mounted on right front of unit	1,150.00	--
22A. SPRINKLER ATTACHMENT: One flushing type nozzle with valve at rear, adjustable horizontally and vertically to sprinkle up to 50' width. Includes on/off control switch in cab.	1,150.00	--
22B. SELF-FILLING ATTACHMENT: Includes means to prime pump with water reserved in tank, two 10' lengths of 3" suction hose, strainer and foot valve	2,600.00	--
22C. 10" DUMP VALVE: Located on bottom of tank near rear. Remotely controlled from cab.	2,600.00	310.00
23A. SPRAY BAR: 8' spray bar with 1/8" nozzles, mounted at rear. Includes on/off controls in cab	1,280.00	--
24A. HOSE REEL, MANUAL: Hose reel mounted at rear with manual rewind. Includes 1 1/2" x 100'		

	List Price	U.S. Fed. Excise Tax
hose and adjustable spray nozzle.	2,475.00	--
24B. HOSE REEL, MANUAL: Hose reel mounted at rear with manual rewind. Includes 1" x 150' hose and adjustable spray nozzle	2,475.00	--
25A. HOSE REEL, ELECTRIC DRIVE: With 1 1/2" x 100' hose and electric motor driven reel rewind	3,090.00	--
25B. HOSE REEL, ELECTRIC DRIVE: With 1" x 150' hose and electric motor driven reel rewind	3,090.00	--
26A. WARNING LAMP: A single 360 degree rotating amber lamp with Two sealed beam lights. Mounted on top of tank at rear	500.00	--
26B. STROBE LIGHT: Mounted on top of tank at rear	500.00	--
27B. LETTERING: Two lines of 6" and 4" lettering on each side of unit, customer specification	700.00	78.00
27D. EXTERIOR PAINT: Special: (Paint specifications must accompany order)	P.O.R.	--
27E. INTERIOR COATING: Special	P.O.R.	--
27F. BACK UP ALARM.	125.00	--
28A. SKID MOUNTING: For domestic delivery	750.00	--

EXPORT PROCESSING

29A. EXPORT PROCESSING: Skid mounted	1,650.00	--
30A. EXPORT PROCESSING: Truck mounted	700.00	--

P.O.R. = Price On Request --Consult Factory

E. D. ETNYRE & CO., Oregon, Illinois 61061-9778
1333 South Daysville Road • Phone: 815/732-2116 • Fax: 815/732-7400

Price Sheet No. C-901-12 Effective October 1, 2011
Supersedes C-901-11

All Prices F.O.B. Destination
U.S. Dollars

PRESSURE SPRINKLER
PTO-DRIVEN WATER DISTRIBUTOR

STANDARD EQUIPMENT

TANK:
10. ga. steel tank, heads and surge plates,
2 1/2" fill line,
20" hinged manhole,
4" overflow pipe

PUMPING UNIT:
185 G.P.M. self-priming centrifugal water pump,
P.T.O. and driveline for water pump drive,
valving in pump suction and discharge line

MISCELLANEOUS:
clearance and identification lights for tank,
remount chassis lights,
single or tandem axle mounting,
access ladder to manhole from side,
hose carrying tray,
paint--prime coat and finish coat one color,
interior coating - epoxy,
and all other standard equipment per current brochure . . .

(No Skirting Included)

Capacity U.S. Gallons	Recommended Truck Chassis	List Price	U.S. Fed. Excise Tax
1500	84"C.A.	22,700.00	
1900	102" — 108" C.A.	24,300.00	
2500	102" — 108" C.B.	26,000.00	1,495.00
3000	120" C.B.	27,600.00	1,685.00
3500	120" C.B.	29,150.00	1,876.00

C.A. = Cab to rear axle center line
C.B. = Cab to center of tandem axle
Note: Truck Mounting included in all List Prices
Note: If truck has automatic transmission, please consult factory

OPTIONAL EQUIPMENT

	List Price	U.S. Fed. Excise Tax
3B. WATER PUMP: 400 G.P.M. water pump in lieu of standard 185 G.P.M. (PTO driven)	450.00	--
4A. FIRE FIGHTING VALVE: 2 1/2" underwriters approved valve with N.S.T. Threads mounted on pump pressure header	575.00	--
4B. SPRAY NOZZLES: 1-4 customers choice. Two piece horizontally split, slot type, adjustable in three planes, hand lockable. Cab controlled electric/air, 2" diaphragm actuated globe type valve. Customer to specify location. (Per nozzle)	1,150.00	--
4C. SPRAY BAR: 8' spray bar controlled from cab with nozzles on 4" centers	1,280.00	--
4D. FILL HOSE: 16' x 2 1/2" hose for hydrant filling	440.00	--
8B. LETTERING: Two lines of 6" and 4" lettering on each side of unit, customer specification	700.00	--
8D. EXTERIOR PAINT: Special: (Paint specifications must accompany order)	P.O.R.	
10. WARNING LAMP: A single 360 degree rotating amber lamp with two sealed beam lights. Mounted on top of tank at rear.	500.00	--
10A. STROBE LIGHT: Mounted on top of tank at rear	500.00	--
11. SKID MOUNTING: For domestic delivery	700.00	--
12. BACK UP ALARM.	125.00	--

EXPORT PROCESSING

12A. EXPORT PROCESSING: Skid mounted	1,200.00
12B. EXPORT PROCESSING: Truck mounted	600.00

P.O.R. = Price On Request —Consult Factory

E. D. ETNYRE & CO., Oregon, Illinois 61061-9778
1333 South Daysville Road • Phone: 815/732-2116 • Fax: 815/732-7400

Price Sheet No. C-601-12 Effective October 1, 2011 Supersedes C-601-11	**BITUMINOUS PUMP** **Model P-200**
All Prices F.O.B. Destination U.S. Dollars	

STANDARD EQUIPMENT

	List Price	U.S. Fed. Excise Tax
1. **PUMPING UNIT: WITH GASOLINE ENGINE DRIVE**		
TRAILER MOUNTED: with exhaust heated Etnyre P-200 bituminous material pump with relief valve, VH-4D Wisconsin engine complete with starter, alternator, and battery, three inch piping with two Etnyre quick couplers, towing tongue, 1500 pound axle on springs, 4 50-12, load range B tires	$12,350.00	
2. SKID MOUNTED: with exhaust heated Etnyre P-200 bituminous pump with relief valve, VH-4D Wisconsin engine complete with starter, alternator and battery, three inch piping with two Etnyre quick couplers, mounted on a heavy duty frame	10,750.00	
2A. **PUMPING UNIT WITH ELECTRIC MOTOR DRIVE**		
SKID MOUNTED: with P-200 Etnyre steam/hot oil jacketed asphalt pump with relief valve, 15 H.P. 1200 R.P.M. 230 or 460 volt 3 phase 60 cycle electric motor, four V-belt drive, heavy duty steel frame, three inch piping with two Etnyre quick couplers	5,925.00	
3. **PUMPING KIT FOR TRACTOR MOUNTING**		
PUMP KIT FOR TRACTOR MOUNTING: With exhaust heated Etnyre P-200 pump with relief valve, three inch piping, two Etnyre quick couplers, and drive line. Does not include installation or tractor power take-off	4,125.00	495.00

EXPORT PROCESSING

BOXING	400.00

E. D. ETNYRE & CO., Oregon, Illinois 61061-9778

1333 S. Daysville Rd. • Phone: 815/732-2116 • Fax: 815/732-7400

Price Sheet No. C-501-12 Effective October 1, 2011 Supersedes C-501-11	VERTICAL ASPHALT EMULSIONS STORAGE TANK
All Prices F.O.B. Destination U.S. Dollars	

SPECIFICATIONS

7OOO Gallon Tank (gravity flow)

STANDARD EQUIPMENT

1. 7000 gallon tank 8'-O" diameter by approximately 19' high.
2. Made from 1/4" carbon steel.
3. Tank insulated with 3" thick fiberglass and covered with aluminum jacketing for all weather protection, including bottom and top.
4. Tank erected on and attached to steel stand to place bottom of tank 7'-O" above ground.
5. Equipped with ladder and safety rail to provide access to door on top of tank. Ladder is enclosed to meet OSHA specifications.
6. Equipped with a minimum of twelve (12) 800 watt electric heat strips (7,200 watt total), (220 volts), attached to the outside bottom of tank. Thermostat control 240 volt 3 phase. All tanks must have the ability to maintain a temperature of 160º F. when the outside temperature is a negative 10º F.
7. Equipped with one (1) 3" steer lever control ball valve for loading and one (1) 3" check valve on inlet and drain line. All are to be thermo taped and insulated.
8. Loading hose 3" diameter and 15' long flexible steel with quick coupler at tank end.
9. Built-in float gauge for measuring liquid, reading both English and Metric.
10. Equipped with electric driven motor 1 HP 3 phase 220 volt, two (2) propeller agitator, RPM designed for agitation of emulsions, with automatic timer capable of agitating from 5 to 30 minutes, in one minute increments, at set times on any given day of the week.
11. One (1) temperature gauge, 4" dial type 50º F. to 350º minimum.
12. Concrete pad and steel support plates to be constructed by customer as per attached plans. Customer will be responsible for required welding to foundation pads.
13. Wiring from storage tank control boxes to power supply to be done by customer.
14. One (1) 110 volt G.F.I. plug.
15. Vendor will construct sufficient hooks on the tank for unloading and lifting onto pad. Cranes for doing this will be provided by customer.
16. Customer will provide welder to weld legs to lag plates on pads as directed by contractor.
17. Tanks and structures must meet all applicable Federal And State codes including electrical components and wind velocity requirements. Successful bidder shall certify that tanks and structures meet such laws & codes.
18. Tank and all attachments to have a one (1) year warranty from date of operation.

Capacity U.S. Gallons	List Price
7000	$55,625.00

OPTIONAL EQUIPMENT

	List Price
A. Equipped with an electric 220 volt three phase motor 10 H.P. and 3" reversible 200 gallon per minute pump system designed to pump emulsion, mounted on stand with a 3" lever ball valve between pump and tank. For loading and unloading the storage tank. **Not Required for circulating emulsions.**.	$5,750.00
B. Special lo-density tube type heaters (in lieu of standard heat strips) for hot 350ºF/400ºF asphalt. 26 KW "Unitized Heater Kit" The heater tubes will be made of 3" Sch 40 black iron pipe. The tubes will be mounted through the side of the tank and include a heavy duty terminal box. The open coil elements will be designed to operate on 240/480 volt. 3 or 1 phase power (specify when ordering). The elements will be removable from the tank without draining (dry well type). This heater kit is sized for heating a 7,000 gallon asphalt storage tank. Will maintain a temperature of 400ºF when the outside temperature is a negative 10ºF. (For use with AC type hot asphalt).	$22,650.00
2,000 gallon tank	DEDUCT [2,250.00]
5,000 gallon tank	DEDUCT [1,120.00]

WARRANTY

E.D. Etnyre & Co. warrants to the original Purchaser, it's new product to be free from defects in material and workmanship for a period of twelve (12) months after date of delivery to original Purchaser. The obligation of the Company is limited to repairing or replacing any defective part returned to the Company and will not be responsible for consequential damages or any further loss by reason of such defect.

The company excludes all implied warranties of merchantability and fitness for a particular purpose. There are no warranties, express or implied, which extend beyond the description of the goods contained in this contract.

This warranty does not obligate the Company to bear the cost of machine transportation in connection with the replacement or repair of defective parts, nor does it guarantee repair or replacement of any parts on which unauthorized repairs or alterations have been made or for components not manufactured by the Company except to the extent of the warranty given by the original Manufacturer.

This warranty does not apply to:

(1) Normal start-up services, normal maintenance services or adjustments usually performed by the selling dealer, factory service representative or customer personnel.

(2) Any product manufactured by E.D. Etnyre & Co. purchased or subjected to rental use.

(3) Any product or part thereof which shows improper operation, improper maintenance, abuse, neglect, damage or modification after shipment from factory.

(4) Any product or part thereof damaged or lost in shipment. Inspection for damage should be made before acceptance or signing any delivery documents releasing responsibility of the delivering carrier.

This warranty and foregoing obligations are in lieu of all other obligations and liabilities including negligence and all warranties of merchantability or otherwise, express or implied in fact or by law.

E. D. ETNYRE & CO., Oregon, Illinois 61061-9778

1333 South Daysville Road Phone: 815/732-2116 Fax: 815-732-7400

Web Site: www.etnyre.com E Mail: sales@etnyre.com

C-751-12
Supersedes C-751-11

CONFIDENTIAL

Effective October 1, 2011

Price List

Falcon Live Bottom Trailers

Falcon Live Bottom Truck Bodies

Sales Office:
E. D. ETNYRE & CO.
1333 So. Daysville Road
Oregon, Ill. 61061-9778
Phone: 815/732-2116
1-800-995-2116
Fax: 815-732-7400
Web Site: www.etnyre.com
E Mail: sales@etnyre.com

E. D. ETNYRE & CO., Oregon, Illinois 61061-9778
1333 South Daysville Road • Phone: 815/732-2116 • Fax: 815/732-7400

Price Sheet No. C-751-12 **Effective October 1, 2011** Supersedes C-751-11	**Falcon Live Bottom Trailer**
All Prices F.O.B. Destination U.S. Dollars	

FALCON LIVE BOTTOM TRAILER

STANDARD EQUIPMENT

HYDRAULICS AND PRODUCT BELT

- 42" Chemical and heat resistant belt
- Independent belt adjustment and tensioning mechanism
- "V" style belt centering for positive alignment
- Double reduction 30:1 planetary gear
- 11.9 cubic inch displacement hydraulic motor
- Steel pintle chain (8) 12,500 rating
- Independent chain adjustment and tensioning mechanism
- Ultra-high molecular polyethylene chain guidance system to reduce friction and wear
- Hydraulic jumper hoses (trailer to tractor)

BODY CONSTRUCTION

- Over the 5th wheel design
- AR steel side walls
- Individual Thurmax insulation panels
- Steel "J" channel side stiffeners
- Steel cross members on 24" centers
- Twin full opening product doors

CHASSIS

- Tandem Reyco Transpro model 88, no hop, 3 leaf spring suspension
- (2) Rockwell TN 4670 axles, 22,500# beam rating
- Air actuated 16 1/2" X 7" brakes, with spring brakes
- Stemco oil seals
- Rockwell automatic slack adjusters
- 10 stud hub piloted steel hubs
- Cast brake drums
- 10 hole hub piloted steel disc wheels
- Telescopic pin style land legs
- Anti-sail Etnyre mud flaps at rear
- Aluminum diamond plate rear fenders

MISCELLANOUS

- L.E.D. sealed lighting system, meets FMVSS-108, 7-way ATA receptacle, low mount, 2 work lights at rear, 2 strobe lights at rear
- Paint black enamel
- Manual front to rear tarp

MODEL	CAPACITY*	OAL		LIST PRICE
Capacity without Bin Extension (with 1' aluminum Bin Extensions Add .3 cubic yards X each foot of length)				
LB-231	22.5 CY	31'	(Tires Not Included)	$63,230.00
LB-232	23.5 CY	32'	(Tires Not Included)	63,575.00
LB-233	24.0 CY	33'	(Tires Not Included)	64,025.00
LB-234	25.0 CY	34'	(Tires Not Included)	64,350.00
LB-235	25.5 CY	35'	(Tires Not Included)	64,775.00
LB-236	26.5 CY	36'	(Tires Not Included)	65,150.00
LB-237	27.5 CY	37'	(Tires Not Included)	65,450.00
LB-238	28.0 CY	38'	(Tires Not Included)	65,850.00
LB-239	29.0 CY	39'	(Tires Not Included)	66,075.00
LB-240	30.0 CY	40'	(Tires Not Included)	66,200.00
LB-241	30.5 CY	41'	(Tires Not Included)	66,350.00

*Capacities based on water level

OPTIONAL EQUIPMENT

		LIST PRICE
A1.	Front fenders, aluminum diamond plate	$700.00
A2.	Two speed landing gear	635.00
A8.	Flow control valve at rear	750.00
A9.	LED lights	Standard
A10.	Work lights, set of two	Standard
A11.	Strobe lights, set of two	Standard
A12.	Backup alarm	200.00
A16.	Special paint, enamel	900.00
A17.	Special paint, metal flake	1,600.00
A18.	Electric front to rear tarp	575.00
A19.	Manual side to side tarp	N/C
A20.	Hubodometer	105.00
A21.	Hydraulic jumper hoses	Standard
A22.	Concrete package	3,100.00
A23.	Deduct for no insulation	Per Foot (45.00)
A24.	Paint insulation panels.	500.00
A25.	12" bin extensions.	1,275.00

UNDERCARRIAGE

DT08.	Aluminum hubs in lieu of steel hubs	per axle	320.00	**(-25#)**
	Aluminum hubs conmet preset TP bearings	per axle	600.00	**(-25#)**
DT09.	HP bearings (same size inner & outer)	per axle	225.00	+20#
DT18.	Brakes - 23,000# rating.	per axle	75.00	+0#
	Brakes - 25,000# rating.	per axle	200.00	+0#
	Disc brakes (Knorr)	per axle	1,225.00	+0#
	Disc brakes (Halodex)	per axle	1,540.00	+0#
	Disc brakes (Meritor)	per axle	1,200.00	+0#
DT23.	Centrifuse drums	per axle	250.00	**(-45#)**
DT21.	12,500 lb. springs in lieu of standard 11,000 lb.	per axle	75.00	+25#
DT24.	8 Leaf springs	per tandem	50.00	**(+170#)**
DT22.	Composite springs	per tandem	825.00	**(-285#)**
DT12.	Reyco 21 1/2B Tandem		695.00	(-45#)
DT13.	Reyco 21B Triaxle		6,695.00	+2,500#
DT14.	Reyco Widespread: 6'—9'—10' spread		4,790.00	+450#
DT15.	Intraax Air Tandem—Widespread		4,700.00	+550#
DT16A.	Intraax Air add-on axle (fixed - no lift), 23,000#		7,360.00	+2,300#
DT16C.	23,000# Intraax Air add-on axle - steerable and liftable (manual controls)		9,950.00	+2,750#
A5.	Intraax 23,000# Additional axle, air ride, air lift, (for dual tires).		8,750.00	
A6.	13,000# Additional axle, air ride, air lift, (for single tires).		5,900.00	
LB.	Intraax Air add-on axle - steerable and liftable (RM 60 controls)		12,000.00	+2,750#
LB.	Composolite 8600# - steerable and liftable axle (manual controls)		5,900.00	+2,750#
	Auto lift axle (Requires 230 or 250 Intraxx option)		1,575.00	
DT17A.	Henderickson Intraax model 230 air ride (includes manual exhaust valve).		3,500.00	**(-70#)**
DT17B.	Henderickson Intraax model 250 air ride (includes manual exhaust valve).		3,975.00	**(-140#)**
DT10.	Rockwell TQ (25,000 lb. rating—5" round)	per axle	75.00	+35#
DT20.	Hubodometer	each	100.00	+0#
DT28.	P.S.I. (automatic tire inflation)	per tandem	850.00	**+10#**
	Anti-Lock 2S/2M (2 sensors - 2 modulators)		Standard	
DT25.	Anti-Lock 4S/2M (4 sensors - 2 modulators)		400.00	
	Anti-Lock 6S/3M (6 sensors - 3 modulators)		940.00	

Hauling Tank Only

DT29. Stainless steel bogie, bumper and landing leg mounts ..... 2,215.00 ..... **+120#**
Aluminum bogie with Huck Bolts ..... 2,000.00 ..... **(-240#)**

TIRES--All prices are List Per Axle

DT03. Steel disc wheels: 10-hole, hub piloted ..... STANDARD
DT06. Aluminum disc wheels: 10-hole, hub-piloted, machine finished ..... per axle 1,150.00 ..... **(-130#)**
Aluminum disc wheels: 10-hole, hub-piloted, polished outers..... per axle 1,250.00 ..... **(-130#)**
Aluminum disc wheels: 10-hole, hub-piloted, Dura-Brite outers..... per axle 1,610.00 ..... **(-130#)**

Yokohama RY587 or Equivalent

Conventional Size

(4) 11R22.5-G ..... $2,600.00 Per Axle
(4) 11R24.5-G 2,700.00

Low Profile

(4) 295/75R22.5-G 2,500.00
(4) 285/75R24.5-G 2,600.00
(2) 385/65R22.5-J Super Single..... 1,925.00

Above tire prices include hub piloted steel disc wheels.

Note: 24.5 steel disc vs. 22.5 steel disc .....+20# per axle
24.5 aluminum disc vs. 22.5 aluminum disc .....+30# per axle
11R24.5 Tire vs. 11R22.5 Tire ..... +30# per axle (approx.)

Wide Base Tires: List Price Est. Weight #

(2) 445/50R22.5-L Michelin X ONE XTE tires on 14” X 22.5” aluminum wheels (machine finish), includes TP type axles, 92” out-to-out, per axle. ..... $4,250.00 ..... (320#)
(2) 455/55R22.5-L Michelin X ONE XTE tires on 14” X 22.5” aluminum wheels (machine finish), includes TP type axles, 92” out-to-out, per axle. ..... $4,560.00 ..... (295#)

Above tire prices include hub piloted steel disc wheels.

E. D. ETNYRE & CO., Oregon, Illinois 61061-9778
1333 South Daysville Road • Phone: 815/732-2116 • Fax: 815/732-7400

Price Sheet No. C-752-12 **Effective October 1, 2011** Supersedes C-751-11	**Falcon Live Bottom Truck Bodies**
All Prices F.O.B. Destination U.S. Dollars	

FALCON LIVE BOTTOM TRUCK BODIES

STANDARD EQUIPMENT

HYDRAULICS AND PRODUCT BELT

- 36" Chemical and heat resistant belt
- Independent belt adjustment and tensioning mechanism
- "V" style belt centering for positive alignment
- Double reduction 30:1 planetary gear
- 11.9 cubic inch displacement hydraulic motor
- Steel pintle chain (8) 12,500 rating
- Independent chain adjustment and tensioning mechanism
- Ultra-high molecular polyethylene chain guidance system to reduce friction and wear

BODY CONSTRUCTION

- AR steel side walls
- Conveyor frame 16" deep
- Steel "J" channel side stiffeners
- Steel cross members on 24" centers
- Twin full opening, air operated product doors
- Individual Thurmax insulation panels
- 1' aluminum diamond plate bin extensions

MISCELLANOUS

- L.E.D. sealed lighting system, meets FMVSS-108, 7-way ATA receptacle, low mount, 2 work lights at rear, 2 strobe lights at rear
- Paint black enamel
- Manual front to rear tarp
- Tandem fenders aluminum diamond plate
- Anti-sail Etnyre mud flaps at rear

MODEL with 1' Bin Extensions	CAPACITY	OAL	LIST PRICE
TMLB-17	15.5 CY	17'	$47,275.00
TMLB-18	16.5 CY	18'	47,625.00
TMLB-19	17.5 CY	19'	47,950.00
TMLB-20	18.5 CY	20'	48,250.00
TMLB-21	19.5 CY	21'	48,600.00
TMLB-22	20.5 CY	22'	48,975.00
TMLB-23	21.5 CY	23'	49,350.00
TMLB-24	22.5 CY	24'	49,750.00
TMLB-25	23.5 CY	25'	51,400.00

FALCON LIVE BOTTOM TRUCK BODIES

OPTIONAL EQUIPMENT

		LIST PRICE
A1.	Fenders, aluminum diamond plate per axle other than tandem	$75.00
A8.	Flow control valve @ rear	750.00
A9.	LED lights	Standard
A10.	Work lights, set of two	Standard
A11.	Strobe lights, set of two	Standard
A12.	Backup alarm	200.00
A16.	Special paint, enamel	900.00
A17.	Special paint, metal flake	1,600.00
A18.	Electric front to rear tarp	575.00
A19.	Manual side to side tarp	N/C
A22.	Concrete package	3,100
A23.	Wet Kit, pump, PTO, tank, and fittings	3,200.00
A24.	Highlift bi-fold door	550.00
A25.	Paint insulation panels.	500.00

FEDERAL EXCISE TAX IS APPLICABLE TO ALL TRUCK MOUNTED UNITS

APPROXIMATE CAB TO BOGIE REQUIREMENTS

with 1' Bin Extensions

MODEL	CAPACITY	OAL	CAB TO BOGIE*
TMLB-17	15.5 CY	17'	134"
TMLB-18	16.5 CY	18'	146"
TMLB-19	17.5 CY	19'	158"
TMLB-20	18.5 CY	20'	170"
TMLB-21	19.5 CY	21'	182"
TMLB-22	20.5 CY	22'	194"
TMLB-23	21.5 CY	23'	206"
TMLB-24	22.5 CY	24'	218"
TMLB-25	23.5 CY	25'	230"

*Useable space (must add for any obstruction), based on 50" axle spacing and 24" overhang at rear.

E. D. ETNYRE & CO.
1333 So. Daysville Road
Oregon, Ill. 61061-9778
email: sales@etnyre.com
www.etnyre.com

E. D. ETNYRE & CO.

CONFIDENTIAL

TRAILER PRICE LIST

Effective January 15, 2012

1333 So. Daysville Road, Oregon, IL 61061-9778
Phone: 815/732-2116 OR 1-800-995-2116
Fax: 815/732-7400 • Telex: MCI 650510432
Web Site: www.etnyre.com

INDEX

MODEL	Price Sheet No.	Page No.
General Information		3
Removable Gooseneck		
Blackhawk Limited 35 ton	C-RTN35-LTD-12R1	5
Blackhawk 3500P 35 Ton	C-3500-12R1	9
Custom RTN 35 Ton	C-RTN35-1R21	13
Paver Special PS3500 Blackhawk	C-3500-PS-12R1	17
Blackhawk Limited PRTN	C-RTN-LTD-12R1	21
Blackhawk PRTN 5055P 55 ton	C-5055-12R1	25
Custom RTN 55 Ton	C-RTN5055-12R1	29
Paver Special PS5055 Blackhawk 55 ton	C-5055-PS-12R1	33
Blackhawk 55 ton PRTN	C-5500-12R1	37
Custom RTN 55 ton	C-RTN55-12R1	41
Blackhawk PRTN 6000P 60 ton	C-6000-12R1	45
Custom RTN 60 ton	C-RTN60-1R3	49
Rear Loaders		
Paver Special 25 & 35 ton	C-RPS-12R1	53
R Series 25 & 35 ton	C-RTL-12R1	57
R Series 40 & 50 ton	C-RTL3-1R3	61
SR Series Tandem 35 ton	C-SR35-12R1	65
Mechanical Removable Gooseneck		
MRG Series Mechanical Removable 30 and 35 ton	C-MRG30/35/40-12R1	69
Folding Gooseneck		
HFR Series Hydraulic Folding Gooseneck 35 ton	C-HFR-TL-12R1	73
HFR Series Hydraulic Folding Gooseneck 35 ton	C-HFR-TD-12R1	75
HFR Series Hydraulic Folding Gooseneck 40 & 50 ton	C-HFR-TL3-12R1	79
HFR Series Hydraulic Folding Gooseneck 40 & 50 ton	C-HFR-TD3-12R1	83
Jeeps		
Jeep Dollies Tandem Axle 60 Ton	C-DOL2-12R1	87
Jeep Dollies Tandem Axle 75 Ton	C-DOL3-12R1	89
Truck Tractor Data		
Truck Tractor Dimensions Tandem Axle		91
Truck Tractor Dimensions Tri Axle		92
Quotation Work Sheet		93

All Prices F.O.B. Destination U.S. Dollars	**PRICE LIST** **GENERAL INFORMATION**

THE FOLLOWING INFORMATION SHOULD BE SUPPLIED WHEN ORDERING AN ETNYRE TRAILER

Model
Capacity
Gooseneck radius
Fifth wheel height (standard or special)
Platform length
Platform height (level or drop platform)
Tire size
Type of Brakes (air, electric, etc.)
Type of wheels (disc or cast spoke)
Include truck dimension sheet
Customer's name, address and telephone number
Manner of payments - (export dealers only)
Import license - (export dealers only)

Domestic sales are subject to Federal Excise Tax. This tax must be paid on all sales to the Federal Government. State and political sub-divisions not subject to tax must supply tax exemption certificates. **There are *no* Federal Excise Taxes included in this price list (see information below).**

Orders accepted by Etnyre are accepted with the understanding that the order is not subject to cancellation unless Etnyre is reimbursed for material and labor which have been applied against it. A revision or order once accepted by Etnyre will not be recognized unless such revision is submitted in writing and agreed to by Etnyre.

Other sizes and types of trailers are available upon special order. Prices upon request.

All price list dimensions, tires sizes, standard and optional equipment are correct in the price list and take precedence over the catalog specification sheet. All specifications are subject to change without notice.

All platform heights and clearances shown on price list sheets are approximate loaded heights and clearances have taken into consideration tire and frame deflection of the trailer under fully rated load.

Trailer weights on price list sheets are approximate and subject to tolerance of plus or minus 5%.

EXCISE TAX INFORMATION

Effective April 1, 1983, you as a trailer dealer were made responsible for the collection and remittance of Federal Excise Tax. All trailers with a Gross Vehicle Weight Rating (GVWR) over 26,000# (ie. 10 ton ramp type tag-a-longs are not subject to excise tax) are subject to this tax unless sold to a tax exempt customer.

- Federal Excise Tax is 12% of the fair market value of the trailer sold.
- The fair market price is your selling price to the customer including your preparation charges.
- You may deduct the Federal Excise Tax paid on the tires from the 12% tax. The Federal Excise Tax paid on standard size tires are shown on price list C-TRE-01. This rule is due to the trailer manufacturer already having paid the tax on the tires.
- The tax is not based on the trade difference if a trade is involved but on the full delivered fair market value of the new trailer.
- Any local or state sales tax must be shown as a separate item or they will be subject to Federal Excise Tax.

E. D. ETNYRE & CO., Oregon, Illinois 61061-9778
1333 South Daysville Road • Phone: 800/995-2116 or 815/732-2116 • Fax: 815/732-7400

Price Sheet No. C-RTN35-LTD-12R1 Effective Januarry 15, 2012 Supersedes C-RTN35-LTD-12R	**PRODUCTION PRTN SERIES BLACKHAWK "LIMITED"** HYDRAULIC REMOVABLE GOOSENECK FRONT AND REAR LOADING TRAILERS **35 Ton** (In any 16' of deck)
All prices exclusive of Federal Excise Tax, FOB Destination and subject to any other applicable taxes. All weights subject to a plus or minus of 5%..	Options on this model limited to only those shown below.

STANDARD FEATURES AND EQUIPMENT

Load capacity - 35 tons in any 16'-0" of deck
Hydraulic Removable Gooseneck
High lift gooseneck
Hydraulically operated by PTO/wet line
Pin and stirrup design
Pin setting - 16"
Swing clearance - 84" maximum
Fifth wheel height - 50" loaded (adjustable 3 position - no blocks)
Gooseneck support arm
Vertical gooseneck locking pin (air operated)
Main frame - 4 beam - 16" fully cambered
Deck height - 22"
Ground clearance - 6"
Deck width - 8'-6" (102")
Crossmember spacing - 24"
Decking - 1 1/2" Apitong (open center)
Decking securement - deck screws
Outriggers - 12" swinging type
Load bearing bolsters between axles
Load bearing half bolsters at rear

Boom well
Ridewell air suspension
Tires - (8)255/70R 22.5 (H) 16 PR tubeless radials
Wheels - 8.25 x 22.5 steel disc (white)
Hubs - Hub piloted with outboard drums
Axles - 22,500# (5/8" wall thickness) with oil bearings
Axle spacing - 55"
Anti-lock brakes - 2S/1M
Brakes - 16 1/2" x 7" full air
Spring Brakes on 2nd axle
Automatic slack adjusters
Lighting - sealed beam - rubber mounted - mid turn signal
Finish - shot blast/epoxy primer/2-part urethane finish
Air lines - glad hands
Electrical - 7 way receptacle
Lash rings - 8 total (4 each side)
Mud Flaps
Red and white conspicuity markings
Paint – Black

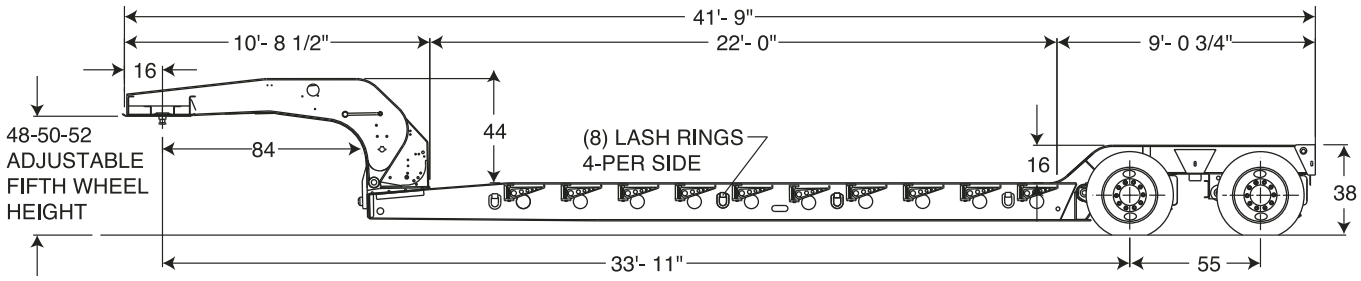

Air Ride Suspension

Model	Capacity	Deck	Axles	Tire Size	List Price	Wt. (Lbs.)
PRTN35LTD	35 tons in 16'	22' Level	2	255/70R22.5 (H)	**$47,450.00**	12,000

OPTIONAL FEATURES AND EQUIPMENT

Options on this model limited to only those shown below.

	PRTN35LTD Price	Wt. (Lbs)
Gooseneck		
50" Loaded 5th wheel height (adjustable ±2")	Std.	Std.
11'-0" Gooseneck (84" swing clearance) (maximum)	Std.	Std.
10 Gauge gooseneck fenders (8'-0" wide/bolt-on)	**1,360.00**	370
Gooseneck support arm	Std.	Std.
Wet line/P.T.O. set-up	Std.	Std.
13 H.P. Honda engine power package mounted in gooseneck base including half cover and controls remoted to side of gooseneck	**3,420.00**	470
1/8" aluminium floor plate for top of gooseneck (bolt-on)	**385.00**	60
Gravel guard on front side of gooseneck (Required with power pack)	**220.00**	50
Jumper hoses (gooseneck to tractor) (12' long other lengths available by request)	**495.00**	
Platform (Deck)		
Four (4) beam drop deck design	Std.	Std.
24" Crossmember spacing	Std.	Std.
22'-0" Deck length	Std.	Std.
8'-6" (102") Deck width	Std.	Std.
12" Swinging outriggers without planks	Std.	Std.
Heavy duty 12" outriggers	**220.00**	
12" Double hook-on outriggers at front of deck	**275.00**	40
1-1/2" Apitong flooring (outside of mainbeams only)	Std.	Std.
1 1/2" Apitong flooring (between mainbeams)	**550.00**	400
Flooring secured with self tapping screws	Std.	Std.
Omit outriggers	**(850 .00)**	(270)
Eight (8) Lash rings (bent style)	Std.	Std.
Front folding ramps (steel with traction bars)	**950.00**	470
Front folding ramps (wood filled)	**950.00**	470
Rear Section and Suspension		
Front transition ramp - steel with traction bars	**495.00**	120
Suspension - Ridewell air ride	Std.	Std.
Suspension - Multi-leaf springs (adds 14" to rear section and O.A.L.)	**(1,600.00)**	(160)
Manual exhaust valve (on air suspension) - knob style	**300.00**	0
Anti-lock brakes - 2S/1M	Std.	Std.
Spring brakes - per axle	**235.00**	30
22,500# Capacity axles (5/8" wall)	Std.	Std.
Axle spacing - 49" springs / 55" air ride	Std.	Std.
Disc wheels, 10 stud, 22.5 x 8.25	Std.	Std.
Oil wheel seals	Std.	Std.
255/70R22.5(H) 16 PR tubeless radial tires	Std.	Std.
22.5 x 8.25 Aluminum wheels outside polished, inside machine finished, outboard mount, hub piloted, 2 axles	**2,500.00**	(220)
Spare tire and wheel (standard tire / shipped loose)	**800.00**	210
Boom well (open bottom)	Std.	Std.
1/4" steel floor plate over boom well (bolt-in)	**275.00**	100
Load bearing bolsters between tires	Std.	Std.
Load bearing bolsters rear of 3rd axle	Std.	Std.
Wheel well covers (over tires only/ bolt-on one piece/ 2 axles / 1/4" floor plate)*	**1,540.00**	850
Automatic slack adjusters	Std.	Std.
DURA BRITE aluminum wheels (per wheel) with aluminum wheel option	**200.00**	(28)
PRO STEEL wheels in lieu of steel (per wheel)	**110.00**	-

OPTIONAL FEATURES AND EQUIPMENT

Options on this model limited to only those shown below.

	PRTN35LTD Price	PRTN35LTD Wt. (Lbs)
Miscellaneous		
Black enamel finish	Std.	Std.
Red enamel finish	N/C	0
Yellow enamel finish	N/C	0
LED (Light Emitting Diodes) lights, standard trailer	**300.00**	0

* Increases height by 4" (wheel covers raised 4" above tires).

E. D. ETNYRE & CO., Oregon, Illinois 61061-9778
1333 South Daysville Road • Phone: 800/995-2116 or 815/732-2116 • Fax: 815/732-7400

Price Sheet No. C-3500-12R1 Effective January 15, 2012
Supersedes C-3500-12R

All prices exclusive of Federal Excise Tax, FOB Destination and subject to any other applicable taxes. All weights subject to a plus or minus of 5%.

PRODUCTION PRTN SERIES
3500P "BLACKHAWK"
HYDRAULIC REMOVABLE GOOSENECK
FRONT AND REAR LOADING TRAILERS
35 Ton
(in any 16'-0" of deck)
Options on this model limited to only those shown below.

STANDARD FEATURES AND EQUIPMENT

Load capacity - 35 tons in any 16'-0" of deck
Hydraulic Removable Gooseneck
High lift gooseneck (35" travel)
Hydraulically operated by PTO/wet line
Pin and stirrup design
Pin setting - 16"
Swing clearance - 84"
Fifth wheel height - 50" loaded (adjustable 3 position- no blocks)
Gooseneck support arm
Vertical gooseneck locking pin (air operated)
Concentrated load in 16'-0"
Main frame - 4 beam - 16" fully cambered
Deck height - 22" (adjustable - no blocks)
Ground clearance - 6" (adjustable - no blocks)
Deck width - 8'-6" (102")
Crossmember spacing - 20"
Decking - 1 1/2" Apitong (open center)
Decking securement - deck screws
Front folding ramps - steel w/traction bars
Outriggers - 12" swinging/removable w/double hook-on at front
Half front bolsters with traction bars
Load bearing bolsters between axles (drop style)
Load bearing half bolsters at rear (drop style)
Boom well (full length including rear half bolster)
Chain slots and flag holders in bolsters
Ridewell air suspension
± 3" adjustable ride height
Manual exhaust valve
Tires - 255/70R 22.5 (H) 16 PR tubeless radials
Wheels - 8.25 x 22.5 steel disc (white)
Hubs - Hub piloted with outboard drums
Axles - 22,500# (5/8" wall thickness) with oil bearings
Axle spacing - 55"
Over-ride chains on all axles
Anti-lock brakes (2S/2M)
Brakes - 16 1/2" x 7" air
Spring brakes - one (1) axle (rear axle)
Automatic slack adjusters
Lighting - L.E.D. type - rubber mounted - mid turn signal
Finish - shot blast / epoxy primer / urethane finish
Air lines - glad hands
Electrical - 7 way receptacle
Lash rings - 8 total (4 each side, bent style)
Mud Flaps
Red and white conspicuity markings

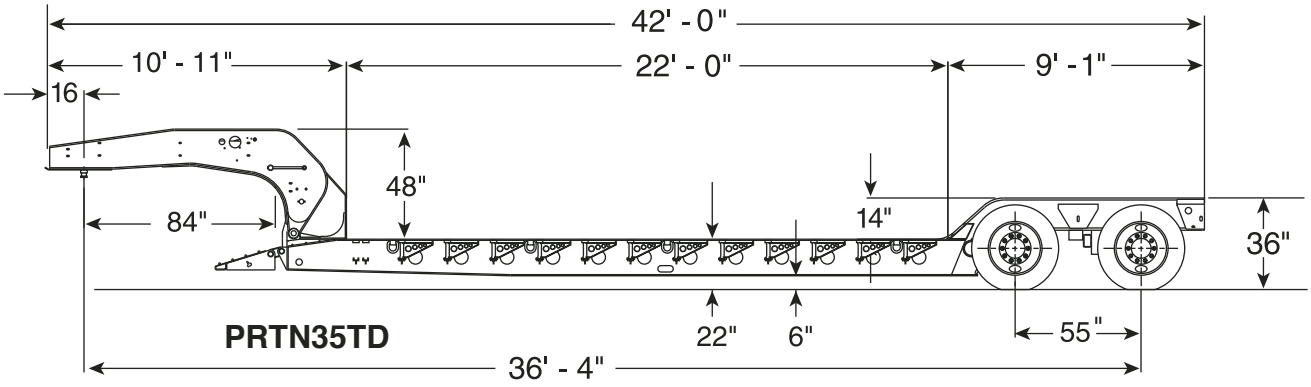

Model	Capacity	Deck	Axles	Tire Size	List Price	Wt. (Lbs.)
PRTN35TD	35	22' Level	2	255/70R22.5 (H)	**$52,815.00**	13,540#

OPTIONAL FEATURES AND EQUIPMENT

Options on this model limited to only those shown below.

	PRTN35TD	
Gooseneck	**Price**	**Wt. (Lbs)**
50" Loaded 5th wheel height (adjustable ±2")	Std.	Std.
11'-0" Gooseneck (84" swing clearance)	Std.	Std.
12'-0" Gooseneck (96" swing clearance)	**275.00**	150
13'-0" Gooseneck (108" swing clearance) (maximum)	**385.00**	400
13'-0" Gooseneck (with removable kingpin at 108" and 84")	**750.00**	550
10 Gauge gooseneck fenders (8'-0" wide / bolt-on) includes clearance lights	**1,360.00**	370
Gooseneck support arm	Std.	Std.
Wet line/P.T.O. set-up	Std.	Std.
Piped for power package & wet line operation	**495.00**	160
13 H.P. Honda engine power package mounted in gooseneck base including half cover and controls remoted to side of gooseneck	**3,420.00**	470
1/8" aluminium floor plate cover for top of gooseneck (bolt-on)	Std.	Std.
Hinged and lockable cover for rear of gooseneck	**210.00**	70
Chain and binder rack in back of gooseneck (not available with power package)	**175.00**	75
Jumper hoses (gooseneck to tractor) (12' long other lengths available by request)	**495.00**	
Platform (Deck)		
Four (4) beam drop deck design	Std.	Std.
Top flange reinforcement (full length…outside flanges only)	**680.00**	235
20" Crossmember spacing	Std.	Std.
22'-0" Deck length (22'-0" clear deck length)	Std.	Std.
24'-0" Deck length (24'-0" clear deck length)	**1,200.00**	590
8'-6" (102") Deck width	Std.	Std.
12" Swinging/removable outriggers without planks	Std.	Std.
12" Double hook-on outriggers at front of deck	Std.	Std.
1-1/2" Apitong flooring (outside of mainbeams only)	Std.	Std.
1-1/2" Apitong flooring (between mainbeams)	**650.00**	500
Flooring secured with self tapping screws	Std.	Std.
Flooring secured with carriage bolts & floor clips	**360.00**	60
Omit outriggers	**(850.00)**	(220)
Outrigger plank spring hold downs (no planks)	**130.00**	20
10" Outrigger planks (2" x 10" Oak) with spring loaded hold downs	**420.00**	470
10" Outrigger planks (2" x 10" Apitong) with spring loaded hold downs	**925.00**	500
Slope front of deck top down (with traction bars)	Std.	Std.
Eight (8) Lash rings (bent style)	Std.	Std.
Front folding ramps (steel with traction bars)	Std.	Std.
Front folding ramps (wood filled, must be specified)	N/C	N/C
Storage baskets (Expanded metal one section between mainbeams)	**120.00**	20#
Rear Section and Suspension		
Front transition ramp (41 ° slope/angle with traction bars)	Std.	Std.
Ridewell air suspension (55" axle spacing) Includes Etnyre manual raising and lowering of air suspension (short moves only, manual pin relocation required)	Std.	Std.
Manual exhaust valve (on air suspension)	Std.	Std.
Over-ride chains on all axles	Std.	Std.
Anti-lock brakes (2S/2M system)	Std.	Std.
Spring brakes - one (1) axle standard, per additional axle	**235.00**	30
22,500# Capacity axles (5/8" wall)	Std.	Std.
Disc wheels, 10 stud, 22.5 x 8.25	Std.	Std.
Oil wheel seals	Std.	Std.
255/70R22.5(H) 16 PR tubeless radial tires	Std.	Std.
Alternate brands of tires	**consult factory**	
22.5 x 8.25 Aluminum wheels outside polished, inside machine finished, outboard mount, hub piloted, 2 axles	**2,500.00**	(220)
Spare tire and wheel (standard tire/loose)	**800.00**	210
Boom well (full length of rear section)	Std.	Std.
1/4" steel floor plate over boom well (bolt-in)	**275.00**	50

OPTIONAL FEATURES AND EQUIPMENT

Options on this model limited to only those shown below.

Rear Section and Suspension (Cont'd)	PRTN35TD Price	PRTN35TD Wt. (Lbs)
DURA BRITE aluminum wheels (per wheel) with aluminum wheel option	**200.00**	(28)
PRO STEEL wheels in lieu of steel (per wheel)	**110.00**	-
Load bearing bolsters between tires (drop style)	Std.	Std.
Load bearing bolsters rear of 2nd axle (drop style)	Std.	Std.
Flag holder slots in ends of bolsters and half bolsters	Std.	Std.
Chain hook slots on bottom of bolsters	Std.	Std.
Wheel well covers (over tires only, bolt-on one piece/ 2 axles / 1/4" floor plate)*	**1,700.00**	850
Automatic slack adjusters	Std.	Std.
Hubometer	**105.00**	10
Miscellaneous		
Black finish	Std.	Std.
Red finish	N/C	0
Yellow finish	N/C	0
Additional side clearance lights (1 pair only)	**110.00**	5
Additional lash rings, each	**45.00**	5
LED (Light Emitting Diodes) lights	Std.	0

* Increases height by 4" (wheel covers raised 4" above tires).

E. D. ETNYRE & CO., Oregon, Illinois 61061-9778
1333 South Daysville Road • Phone: 800/995-2116 or 815/732-2116 • Fax: 815/732-7400

Price Sheet No. C-RTN35-12R1 Effective January 15, 2012
Supersedes C-RTN35-12R

All prices exclusive of Federal Excise Tax, FOB Destination and subject to any other applicable taxes. All weights subject to a plus or minus of 5%.

CUSTOM RTN SERIES
HYDRAULIC REMOVABLE GOOSENECK
FRONT AND REAR LOADING TRAILERS
35 Ton
(in any 16'-0" of deck)

STANDARD FEATURES AND EQUIPMENT

Load capacity - 35 tons in any 16'-0" of deck
Hydraulic Removable Gooseneck
High lift gooseneck (35" travel)
Hydraulically operated by PTO/wet line
Pin and stirrup design
Pin setting - 16"
Swing clearance - 84"
Fifth wheel height - 50" loaded (adjustable 3 position - no blocks)
Gooseneck support arm
Vertical gooseneck locking pin (air operated)
Concentrated load in 16'-0"
Main frame - 4 beam - 16" fully cambered
Deck height - 22" (adjustable - no blocks)
Ground clearance - 6" (adjustable - no blocks)
Deck width - 8'-6" (102")
Crossmember spacing - 20"
Decking - 1 1/2" Apitong (open center)
Decking securement - deck screws
Front folding ramps - steel w/traction bars
Outriggers - 12" swinging/removable w/double hook-on at front
Half front bolsters with traction bars
Load bearing bolsters between axles (drop style)
Load bearing half bolsters at rear (drop style)
Boom well (full length including rear half bolster)
Chain slots and flag holders in bolsters
Ridewell air suspension
± 3" adjustable ride height
Manual exhaust valve
Tires - 255/70R 22.5 (H) 16 PR tubeless radials
Wheels - 8.25 x 22.5 steel disc (white)
Hubs - Hub piloted with outboard drums
Axles - 22,500# (5/8" wall thickness) with oil bearings
Axle spacing - 55"
Over-ride chains on all axles
Anti-lock brakes (2S/2M)
Brakes - 16 1/2" x 7" air
Spring brakes - one (1) axle (rear axle)
Automatic slack adjusters
Lighting - L.E.D. type - rubber mounted - mid turn signal
Finish - shot blast / epoxy primer / urethane finish
Air lines - glad hands
Electrical - 7 way receptacle
Lash rings - 8 total (4 each side, bent style)
Mud Flaps
Red and white conspicuity markings

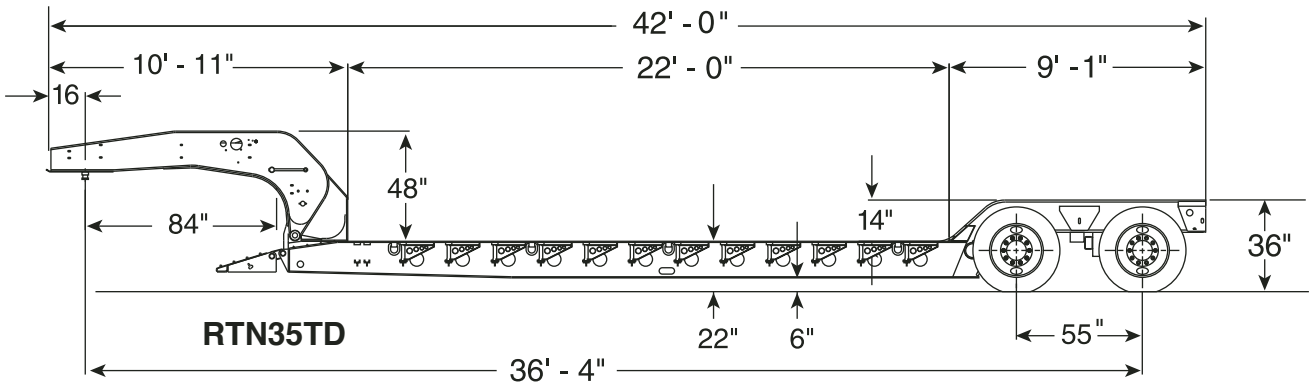

Model	Capacity	Deck	Axles	Tire Size	List Price	Wt. (Lbs.)
RTN35TD	35	22' Level	2	255/70R22.5 (H)	**$55,650.00**	13,940#

OPTIONAL FEATURES AND EQUIPMENT

	RTN35TD Price	Wt. (Lbs)
Gooseneck		
50" Loaded 5th wheel height (adjustable ±2")	Std.	Std.
11'-0" Gooseneck (84" swing clearance)	Std.	Std.
12'-0" Gooseneck (96" swing clearance)	**$350.00**	150
13'-0" Gooseneck (108" swing clearance)	**550.00**	400
13'-0" Gooseneck (with removable kingpin at 108" abd 84" swing clearance)	**750.00**	550
10 Gauge gooseneck fenders (8'-0" wide/bolt-on) includes clearance lights	**1,360.00**	370
Gooseneck support arm	Std.	Std.
Wet line/P.T.O. set-up	Std.	Std.
Piped for power package & wet line operation	**495.00**	160
13 H.P. Honda engine power package mounted in gooseneck base including half cover and controls remoted to side of gooseneck	**3,420.00**	470
1/8" aluminium floor plate cover for top of gooseneck/bolt-on.	Std.	Std.
Hinged and lockable cover for rear of gooseneck/bolt-on	**210.00**	70
Spare tire carrier (on top of gooseneck)	**410.00**	125
Chain and binder rack in back of gooseneck (not available with power package)	**175.00**	75
Air actuated gooseneck to deck locking pin	Std.	Std.
Jumper hoses (gooseneck to tractor) (12' long other lengths available by request)	**495.00**	
Platform (Deck)		
Frame reinforcing for future 3rd axle (air suspension only)	**600.00**	500
Concentrated load in 10'-0".	**600.00**	500
Four (4) beam drop deck design	Std.	Std.
20" Crossmember spacing	Std.	Std.
21'-0" Deck length **	**0**	(290)
22'-0" Deck length	Std.	Std.
23'-0" Deck length **	**950.00**	290
24'-0" Deck length **	**1,900.00**	590
8'-6" (102") Deck width	Std.	Std.
9'-0" (108") Deck width	**1,400.00**	590
10'-0" (120") Deck width	**2,500.00**	1,090
12" Swinging/removable outriggers without planks	Std.	Std.
12" Double hook-on outriggers at front of deck	Std.	40
1-1/2" Apitong flooring (outside of mainbeams only)	Std.	Std.
1-1/2" Apitong flooring (between mainbeams)	**650.00**	500
Flooring secured with self tapping screws	Std.	Std.
Flooring secured with carriage bolts & floor clips	**360.00**	60
Omit outriggers	**(850.00)**	(220)
Outrigger plank spring hold downs (no planks)	**130.00**	20
10" Outrigger planks (2" x 10" Oak) with spring loaded hold downs	**460.00**	470
10" Outrigger planks (2" x 10" Apitong) with spring loaded hold downs	**925.00**	500
Slope front of deck top down (with traction bars)	Std.	Std.
Eight (8) Lash rings (bent style)	Std.	Std.
Expanded metal between mainbeams (per section)	**120.00**	20
Reinforced top flange/side members	**680.00**	235
Front folding ramps (steel with traction bars)	Std.	Std.
Front folding ramps (wood filled. Must be specified)	N/C	N/C
Front folding ramps (double fold over/wood)	**1,300.00**	550
Center hook-on ramp (31" long) wood filled/aluminium	**1,025.00**	170
Auxiliary crossmembers (outside of mainbeams between crossmembers, on 10" centers)	**1,050.00**	300
Auxiliary crossmembers (full width between crossmembers, on 10" centers)	**1,450.00**	440
Delete traction bars at front of deck	**0**	(40)
Bucket trough in rear of deck (rear three crossmembers covered with 1/4" steel plate. Includes stubbed shock mount tube in rear section.	**730.00**	325
Anti-lock brakes (2S/2M system)	Std.	Std.
Paver Beams - Double Taper w 41" (wood filled ramps)	**2,000.00**	0
Rear Section and Suspension		
Front transition ramp (41° slope/angle with traction bars)	Std.	Std.
Delete transition ramp (air suspension only)	**(290.00)**	(270)
Delete bolsters between tires (air suspension only)	**(210.00)**	(195)

OPTIONAL FEATURES AND EQUIPMENT

Rear Section and Suspension (Cont'd)	RTN35TD Price	Wt. (Lbs)
Single point spring suspension	**500.00**	(180)
Hutch four (4) spring suspension (49" axle spacing)	**1,600.00**	(220)
Ridewell Air suspension (54" axle spacing)** includes Etnyre manual raising and lowering of air suspension (short moves only, manual pin relation required)	Std.	Std.
Air raise and lower valve (hand control valve/air suspension only/recommended on 3rd axle)	**300.00**	10
Manual exhaust valve (on air suspension)	Std.	Std.
22,500# Capacity axles (5/8" wall)	Std.	Std.
25,000# Capacity axles (3/4" wall), **per axle**	**235.00**	35
55" Axle spacing	Std.	Std.
Dust covers (2 axles)	**150.00**	20
Scale-O-Matic (with one access station plumbed to driver's side of trailer at rear of deck. Air suspension only)	**350.00**	30
Disc wheels, 10 stud, 22.5 x 8.25	Std.	Std.
Oil wheel seals	Std.	Std.
255/70R22.5(H) 16 PR tubeless radial tires	Std.	Std.
Alternate brands of tires	**consult factory**	
22.5 x 8.25 Aluminum wheels, outside polished, inside machine finished, outboard mount, hub piloted, 2 axles	**2,500.00**	(220)
22.5 x 8.25 Aluminum wheels, outside polished, inside machine finished, outboard mount, hub piloted, 3 axles	**3,750.00**	(330)
Spare tire and wheel (standard tire)	**800.00**	210
DURA BRITE aluminum wheels (per wheel) with aluminum wheel option	**200.00**	(28)
PRO STEEL wheels (in lieu of std steel)- (per wheel)	**110.00**	-
Boom well (full length of rear section) open bottom	Std.	Std.
Load bearing bolsters between tires	Std.	Std.
Load bearing bolsters rear of 2nd axle	Std.	Std.
Flag holder slots in ends of bolsters and half bolsters	Std.	Std.
Chain hook slots on bottom of bolsters	Std.	Std.
36" Rear beavertail (afterdeck/wood filled)	**1,950.00**	950
60" Rear folding ramps (spring assisted/wood filled)	**2,200.00**	450
Wheel well covers (over tires only, bolt-on/ 2 axles/1/4" floor plate *	**1,700.00**	490
Spring brakes, one (1) axle standard, per additional axle	**235.00**	30
Automatic slack adjusters	Std.	Std.
Hubometer	**105.00**	10
Connections for future removable 3rd axle (includes air and electrical connections plumbed to rear of trailer) **	**1,500.00**	160
3rd Axle flip up and removable with Ridewell air suspension, standard axles and tires, 8'-6" wide (for use with air suspension only)** (must add frame reinforcement)	**12,250.00**	2,820
9'-0" wide (for use with Air Suspension Only).	**12,600.00**	2,920
10'-0" wide (For use with Air Suspension Only).	**12,850.00**	3,195
Miscellaneous		
Black finish	Std.	Std.
Yellow finish	N/C	0
Red finish	N/C	0
Paint, other than standard color enamel, color matched (does not include polyurethene, metallics or Imron finishes)	**990.00**	0
Lash rings, each	**45.00**	10
Strobe light for rear (amber LED / built into rear light bar)	**275.00**	20
Strobe lights for rear (2 yellow lights/magnetically attached)	**460.00**	40
Flasher kit for rear lights, including wet cell battery and recharging feature.	**385.00**	50
New York amber lights (3rd amber tail light)	**140.00**	15
3rd tail light package (red / tail light circuit)	**95.00**	10
Additional side clearance lights (1 pair only)	**110.00**	5

* Increases height by 4" (wheel covers raised 4" above tires). ** Special build - verify availability prior to quoting. 3rd axle is available only for use on trailers with air suspensions and trailers reinforced for additional axles(s).

E. D. ETNYRE & CO., Oregon, Illinois 61061-9778
1333 South Daysville Road • Phone: 800/995-2116 or 815/732-2116 • Fax: 815/732-7400

Price Sheet No. C-3500-PS-12R1 Effective January 15, 2012 Supersedes C-3500-PS-12R	**PRODUCTION** **PAVER SPECIAL SERIES** **PS3500 "BLACKHAWK"** HYDRAULIC REMOVABLE GOOSENECK FRONT LOADING TRAILERS **35 Ton** (in any 16'-0" of deck) Options on this model limited to only those shown below.
All prices exclusive of Federal Excise Tax, FOB Destination and subject to any other applicable taxes. All weights subject to a plus or minus of 5%.	

STANDARD FEATURES AND EQUIPMENT

Load capacity - 35 tons in any 16'-0" of deck
Hydraulic Removable Gooseneck
High lift gooseneck (35" travel)
Hydraulically operated by PTO/wet line
Pin and stirrup design
Pin setting - 16"
Swing clearance - 84"
Fifth wheel height - 50" loaded (adjustable 3 position - no blocks)
Gooseneck support arm
Vertical gooseneck locking pin (air operated)
Main frame - 4 beam - 16" fully cambered
Deck height - 22" (adjustable - no blocks)
Ground clearance - 6" (adjustable - no blocks)
8'-6" (102") Deck width
Crossmember spacing - 20"
Decking - 1 1/2" Apitong (full width)
Decking securement - deck screws
Front Folding Ramps - 41" adjustable width (wood filled)
Outriggers - none (weldments included for later installation of outriggers)
Tapered front beams (8 3/8" deep)
3:1 sloped deck (18º) covered with 1 1/2"Apitong
Full width rear deck covered with 1 1/2"Apitong
Top flange reinforcement (outside main beams only)
Flag holders in bolsters
Ridewell air suspension
± 3" Adjustable ride height
Manual exhaust valve
Tires - 255/70R 22.5 (H) 16 PR tubeless radials
Wheels - 8.25 x 22.5 steel disc (white)
Hubs - Hub piloted with outboard drums
Axles - 22,500# (5/8" wall thickness) with oil bearings
Axle spacing - 55"
Over-ride chains on all axles
Anti-lock brakes (2S/2M)
Brakes - 16 1/2" x 7" air
Spring Brakes - one (1) axle (rear axle)
Automatic slack adjusters
Lighting - L.E.D. type - rubber mounted - mid turn signal
Amber LED strobes in 3rd tail light, with battery and rechargeable feature
Finish - shot blast / epoxy primer / urethane finish
Air lines - glad hands
Electrical - 7 way receptacle
Lash rings - 10 total (5 each side/ 4 each side of deck, bent style / 1 each side rear flat style)
Mud Flaps
Red and white conspicuity markings

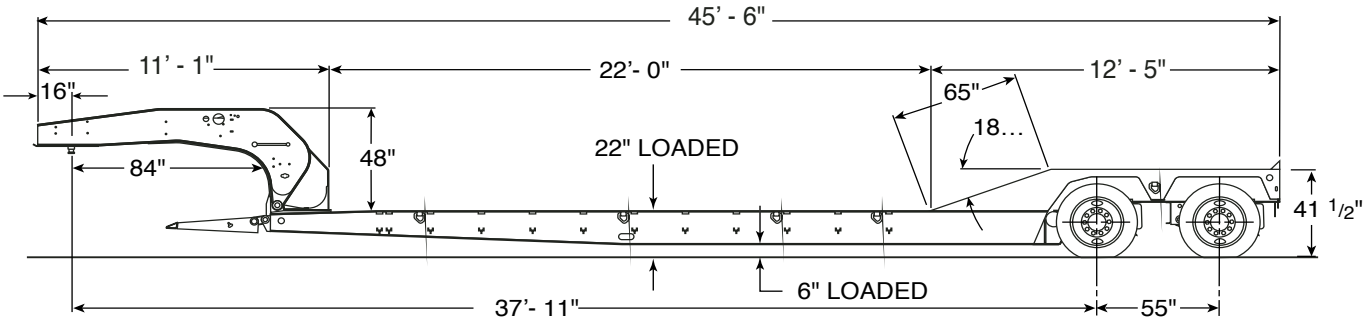

PRTN35TD-PS

Model	Capacity	Deck	Axles	Tire Size	List Price	Wt. (Lbs.)
PRTN35TD-PS	35	22' Level	2	255/70R22.5 (H)	**$57,665.00**	14,980#

OPTIONAL FEATURES AND EQUIPMENT

Options on this model limited to only those shown below.

	PRTN35TD-PS Price	Wt. (Lbs)
Gooseneck		
50" Loaded 5th wheel height (adjustable ±2")	Std.	Std.
11'-0" Gooseneck (84" swing clearance)	Std.	Std.
12'-0" Gooseneck (96" swing clearance)	**275.00**	150
13'-0" Gooseneck (108" swing clearance)	**385.00**	700
13'-0" Gooseneck (with removable kingpin at 108" and 84")	**750.00**	860
10 Gauge gooseneck fenders (8'-0" wide/bolt-on) includes clearance lights	**1,360.00**	370
Gooseneck support arm	Std.	Std.
Wet line/P.T.O. set-up	Std.	Std.
Piped for power package & wet line operation	**495.00**	160
13 H.P. Honda engine power package mounted in gooseneck base including half cover and controls remoted to side of gooseneck	**3,420.00**	470
1/8" aluminium floor plate cover for top of gooseneck (bolt-on)	Std.	Std.
Hinged and lockable cover for rear of gooseneck	**210.00**	70
Chain and binder rack in back of gooseneck (not available with power package)	**175.00**	75
Jumper hoses (gooseneck to tractor) (12' long other lengths available by request)	**495.00**	
Platform (Deck)		
Frame reinforcing for future 3rd axle (not available)	**N/A**	N/A
Concentrated load in 10'-0" (not available)	**N/A**	N/A
Four (4) beam drop deck design	Std.	Std.
Top flange reinforcement (full length…outside flange only)	Std.	235
20" Crossmember spacing	Std.	Std.
22'-0" Deck length (22'-0" clear deck length)	Std.	Std.
24'-0" Deck length (24'-0" clear deck length)	**1,200.00**	590
8'-6" (102") Deck width	Std.	Std.
12" Swinging/removable outriggers without planks; includes 12" Double hook-on outriggers at front of deck	**960.00**	270
1-1/2" Apitong flooring (full width)	Std.	Std.
Flooring secured with self tapping screws	Std.	Std.
Flooring secured with carriage bolts & floor clips (deck and rear section)	**880.00**	60
10" Outrigger planks (2" x 10" Oak) (Loose)	**460.00**	470
10" Outrigger planks (2" x 10" Apitong) (Loose)	**925.00**	500
Slope front of deck top down (no traction bars)	Std.	Std.
Ten (10) Lash rings (4 each side of deck, bent style. 1 each side rear, flat style)	Std.	Std.
Front folding ramps (wood filled/ 41" long, adjustable width)	Std.	Std.
Center hook-on ramp (41" long) wood filled aluminum - one piece	**1,025.00**	170
Center hook-on ramp (41" long) wood filled aluminum - two piece, stored on gooseneck	**1,540.00**	200
Rear Section and Suspension		
Front transition ramp (18 ° slope/angle full width 1 1/2" Apitong flooring)	Std.	Std.
Boomwell w/extra low cross member	**1,600.00**	0
Ridewell Air suspension (55" axle spacing) includes Etnyre manual raising and lowering of air suspension (short moves only, manual pin relation required)	Std.	Std.
Manual exhaust valve (on air suspension)	Std.	Std.
Over-ride chains on all axles	Std.	Std.
Anti-Lock brakes (2S/2M system).	Std.	Std.
Spring brakes - one (1) axle standard, per additional axle	**235.00**	30
22,500# Capacity axles (5/8" wall)	Std.	Std.
55" Axle spacing	Std.	Std.
Disc wheels, 10 stud, 22.5 x 8.25	Std.	Std.
Oil wheel seals	Std.	Std.
255/70R22.5(H) 16 PR tubeless radial tires	Std.	Std.
Alternate brands of tires	**consult factory**	

OPTIONAL FEATURES AND EQUIPMENT

Options on this model limited to only those shown below.

Rear Section and Suspension (Cont'd)	PRTN35TD-PS Price	Wt. (Lbs)
22.5 x 8.25 Aluminum wheels, outside polished, inside machine finished, outboard mount, hub piloted, 2 axles	**2,500.00**	(220)
Spare tire and wheel (standard tire/loose)	**800.00**	210
Full width rear (covered with 1 1/2" apitong)	Std.	Std.
DURA BRITE aluminum wheels (per wheel) with aluminum wheel option	**200.00**	(28)
PRO STEEL wheels (in lieu of std steel)- (per wheel)	**110.00**	**-**
Flag holder slots in ends of bolsters and half bolsters	Std.	Std.
Automatic slack adjusters	Std.	Std.
Hubometer	**105.00**	10
Miscellaneous		
Black finish	Std.	Std.
Red finish	N/C	0
Yellow finish	N/C	0
Additional side clearance lights (1 pair only)	**110.00**	5
Additional lash rings, each	**45.00**	5
LED (Light Emitting Diodes) lights	Std.	0

Note: For custom options contact factory.

E. D. ETNYRE & CO., Oregon, Illinois 61061-9778
1333 South Daysville Road • Phone: 800/995-2116 or 815/732-2116 • Fax: 815/732-7400

Price Sheet No. C-RTN-LTD-12R1 Effective January 15, 2012 Supercedes C-RTN-LTD-12R	**PRODUCTION PRTN SERIES BLACKHAWK "LIMITED"** HYDRAULIC REMOVABLE GOOSENECK FRONT AND REAR LOADING TRAILERS **55 Ton** Evenly distributed over entire deck length
All prices exclusive of Federal Excise Tax, FOB Destination and subject to any other applicable taxes. All weights subject to a plus or minus of 5%.	Options on this model limited to only those shown below.

STANDARD FEATURES AND EQUIPMENT

Load capacity - 55 tons evenly distributed over entire deck length
- 50 tons in any 16'-0" of deck
Hydraulic Removable Gooseneck
High lift gooseneck
Hydraulically operated by PTO/wet line
Pin and stirrup design
Pin setting - 16"
Swing clearance - 84" maximum
Fifth wheel height - 50" (adjustable ±2" - no blocks)
Gooseneck support arm
Vertical gooseneck locking pin (air operated)
Main frame - 4 beam - 16" fully cambered
Deck height - 22"
Ground clearance - 6"
Deck width - 8'-6" (102")
Crossmember spacing - 24"
Decking - 1 1/2" Apitong (open center)
Decking securement - deck screws
Outriggers - 12" heavy duty swinging/removable
Load bearing bolsters between axles
Load bearing half bolsters at rear
Boom well
Ridewell air suspension
Tires - (12)255/70R 22.5 (H) 16 PR tubeless radials
Wheels - 8.25 x 22.5 steel disc (white)
Hubs - Hub piloted with outboard drums
Axles - 22,500# (5/8" wall thickness) with oil bearings
Axle spacing - 55"
Anti-lock brakes - none (trailer exceeds 120,000# GVWR)
Brakes - 16 1/2" x 7" full air
Spring brakes on 2nd axle
Automatic slack adjusters
Lighting - sealed beam - rubber mounted - mid turn signal
Finish - shot blast/epoxy primer/2-part urethane finish
Air lines - glad hands
Electrical - 7 way receptacle
Lash rings - 12 total (6 each side)
Mud Flaps
Red and white conspicuity markings
Paint – Black

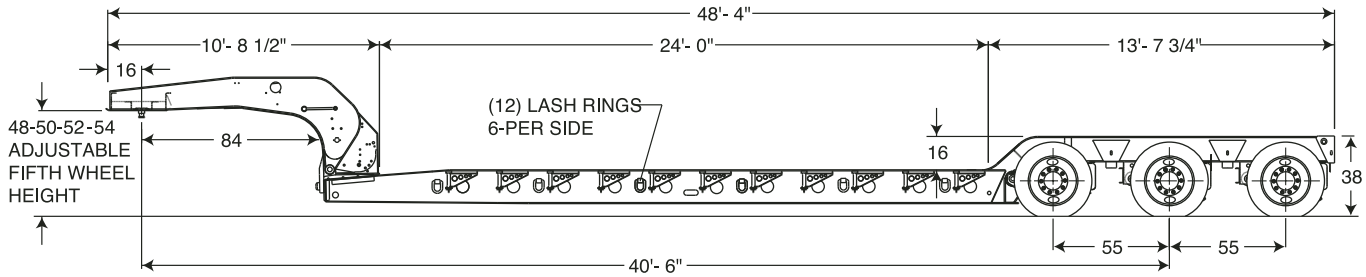

Air Ride Suspension

Model	Capacity	Deck	Axles	Tire Size	List Price	Wt. (Lbs.)
PRTN55LTD3	55 tons evenly distributed (50 tons in 16')	24' Level	3	255/70R22.5 (H)	**$53,795.00**	16,500

OPTIONAL FEATURES AND EQUIPMENT

Options on this model limited to only those shown below.

	PRTN55LTD3 Price	Wt. (Lbs)
Gooseneck		
50" Loaded 5th wheel height (adjustable ±2")	Std.	Std.
11'-0" Gooseneck (84" swing clearance) (maximum)	Std.	Std.
10 Gauge gooseneck fenders (8'-0" wide/bolt-on)	**1,360.00**	370
Gooseneck support arm	Std.	Std.
Wet line/P.T.O. set-up	Std.	Std.
13 H.P. Honda engine power package mounted in gooseneck base including half cover and controls remoted to side of gooseneck	**3,420.00**	470
1/8" aluminium floor plate for top of gooseneck (bolt-on)	**385.00**	60
Gravel guard on front side of gooseneck (Required with power pack)	**220.00**	50
Jumper hoses (gooseneck to tractor) (12' long other lengths available by request)	**495.00**	
Platform (Deck)		
Four (4) beam drop deck design	Std.	Std.
24" Crossmember spacing	Std.	Std.
24'-0" Deck length	Std.	Std.
8'-6" (102") Deck width	Std.	Std.
12" heavy duty swinging/removable outriggers without planks	Std.	Std.
12" Double hook-on outriggers at front of deck	**275.00**	40
1-1/2" Apitong flooring (outside of mainbeams only)	Std.	Std.
1 1/2" Apitong flooring (between mainbeams)	**800.00**	500
Flooring secured with self tapping screws	Std.	Std.
Omit outriggers	**(875.00)**	(270)
10" Outrigger planks (2" x 10" Oak) with spring loaded hold downs	**460.00**	470
Twelve (12) Lash rings (bent style)	Std.	Std.
Front folding ramps (steel with traction bars)	**950.00**	470
Front folding ramps (wood filled)	**950.00**	470
Rear Section and Suspension		
Front transition ramp - steel with traction bars	**495.00**	120
Suspension - Ridewell air ride	Std.	Std.
Suspension - Multi-leaf springs (adds 14" to rear section and O.A.L.)	**(2,500.00)**	(250)
Manual exhaust valve (on air suspension) - knob style	**300.00**	0
Anti-lock brakes - none (exceeds 120,000# GVWR)	N/A	N/A
Spring brakes - per axle	**235.00**	30
22,500# Capacity axles (5/8" wall)	Std.	Std.
Air lift (requires adjustment of leveling valve, 3rd axle only)	**1,100.00**	300
Axle spacing - 49" springs / 55" air ride	Std.	Std.
Disc wheels, 10 stud, 22.5 x 8.25	Std.	Std.
Oil wheel seals	Std.	Std.
255/70R22.5(H) 16 PR tubeless radial tires	Std.	Std.
22.5 x 8.25 Aluminum wheels outside polished, inside machine finished, outboard mount, hub piloted, 3 axles	**3,750.00**	(330)
Spare tire and wheel (standard tire / shipped loose)	**800.00**	210
Boom well (open bottom)	Std.	Std.
10 ga. floor plate over boom well (bolt-in)	**385.00**	100
Load bearing bolsters between tires	Std.	Std.
Load bearing bolsters rear of 3rd axle	Std.	Std.
Wheel well covers (over tires only/ bolt-on one piece/ 3 axles / 1/4" floor plate)*	**2,975.00**	1,280
Wheel well covers (over tires only/ bolt-on one piece/ 3 axles / 1/2" floor plate)* For use with scrapers.	**4,000.00**	1,710
Automatic slack adjusters	Std.	Std.
DURA BRITE aluminum wheels (per wheel) with aluminum wheel option	**200.00**	(28)
PRO STEEL wheels (in lieu of std steel)- (per wheel).	**110.00**	-

OPTIONAL FEATURES AND EQUIPMENT

Options on this model limited to only those shown below.

	PRTN55LTD3 Price	PRTN55LTD3 Wt. (Lbs)
Miscellaneous		
Black enamel finish	Std.	Std.
Red enamel finish	N/C	0
Yellow enamel finish	N/C	0
LED (Light Emitting Diodes) lights, standard trailer	**300.00**	0
Gooseneck Swing Out Pull Out Wide Load Lite, 4" amber LED strobe (1 pair)	**750.00**	0
Pull Out Under Bolster Between Axles 1 & 2, 4" amber LED strobe (1) pair	**650.00**	0

* Increases height by 4" (wheel covers raised 4" above tires).

E. D. ETNYRE & CO., Oregon, Illinois 61061-9778
1333 South Daysville Road • Phone: 800/995-2116 or 815/732-2116 • Fax: 815/732-7400

Price Sheet No. C-5055-12R1 Effective January 15, 2012
Supersedes C-5055-12R

All prices exclusive of Federal Excise Tax, FOB Destination and subject to any other applicable taxes. All weights subject to a plus or minus of 5%.

PRODUCTION PRTN SERIES
5055P "BLACKHAWK"
HYDRAULIC REMOVABLE GOOSENECK
FRONT AND REAR LOADING TRAILERS
55 Ton
Evenly distributed over entire deck length

Options on this model limited to only those shown below.

STANDARD FEATURES AND EQUIPMENT

Load capacity - 55 tons evenly distributed over entire deck length
- 50 tons in any 16'-0" of deck with close coupled 4th axle

Hydraulic Removable Gooseneck
High lift gooseneck (35" travel)
Hydraulically operated by PTO/wet line
Pin and stirrup design
Pin setting - 16"
Swing clearance - 84"
Fifth wheel height - 50" loaded (adjustable 4 position - no blocks)
Gooseneck support arm
Vertical gooseneck locking pin (air operated)
Frame reinforced - For 4th axle.
Main frame - 4 beam - 16" fully cambered
Top flange reinforcement (full length ... outside flanges only)
Deck height - 22" (adjustable - no blocks)
Ground clearance - 6" (adjustable - no blocks)
Deck width - 8'-6" (102")
Crossmember spacing - 20"
Decking - 1 1/2" Apitong (open center)
Decking securement - deck screws
Front folding ramps - steel w/traction bars
Outriggers - 12" swinging/removable w/double hook-on at front
Bucket trough at rear of deck (covered with steel plate)
Extra low 1st crossmember in rear bridge
Half front bolsters with traction bars
Load bearing bolsters between axles (drop style)
Load bearing half bolsters at rear (drop style)
Boom well (full length including rear half bolster) (fully open / no cover)
Chain slots and flag holders in bolsters
Ridewell air suspension
±3" Adjustable ride height
Manual exhaust valve
Tires - (12)255/70R 22.5 (H) 16 PR tubeless radials
Wheels - 8.25 x 22.5 steel disc (white)
Hubs - Hub piloted with outboard drums
Axles - 22,500# (5/8" wall thickness) with oil bearings
Axle spacing - 55"
Over-ride chains on all axles
Anti-lock brakes - none (trailer exceeds 120,000# GVWR)
Brakes - 16 1/2" x 7" full air
Spring Brakes - one (1) axle (center axle)
Automatic slack adjusters
Lighting - L.E.D. type - rubber mounted - mid turn signal
Finish - shot blast / epoxy primer / urethane finish
Air lines - glad hands
Electrical - 7 way receptacle
Lash rings - 12 total (6 each side) bent style
Mud Flaps
Red and white conspicuity markings

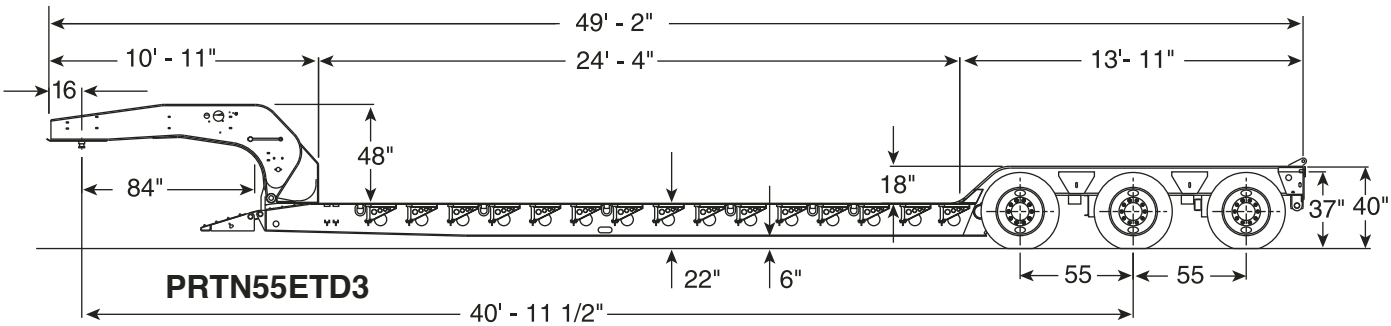

Model	Capacity	Deck	Axles	Tire Size	List Price	Wt. (Lbs.)
PRTN55ETD3	55 tons evenly distributed 50 tons in 16'	24' Level	3	255/70R22.5 (H)	**$69,950.00**	19,500

OPTIONAL FEATURES AND EQUIPMENT

Options on this model limited to only those shown below.

	PRTN55ETD3 Price	Wt. (Lbs)
Gooseneck		
50" Loaded 5th wheel height (adjustable ±2")	Std.	Std.
11'-0" Gooseneck (84" swing clearance)	Std.	Std.
12'-0" Gooseneck (96" swing clearance)	**480.00**	150
13'-0" Gooseneck (108" swing clearance) (maximum)	**650.00**	400
13'-0" Gooseneck (with removable kingpin at 108" and 84")	**1,000.00**	550
10 Gauge gooseneck fenders (8'-0" wide/bolt-on) includes clearance lights	**1,360.00**	370
Gooseneck support arm	Std.	Std.
Wet line/P.T.O. set-up	Std.	Std.
Piped for power package & wet line operation	**495.00**	160
13 H.P. Honda engine power package mounted in gooseneck base including half cover and controls remoted to side of gooseneck	**3,420.00**	470
1/8" aluminium floor plate for top of gooseneck (bolt-on)	Std.	Std.
Hinged and lockable cover for rear of gooseneck (bolt-on)	**210.00**	70
Chain and binder rack in back of gooseneck (not available with power package)	**175.00**	75
Jumper hoses (gooseneck to tractor) (12' long other lengths available by request)	**495.00**	
Platform (Deck)		
Frame reinforcing for future 4th axle	Std.	Std.
Four (4) beam drop deck design	Std.	Std.
Top flange reinforcement (full length …outside flanges only)	Std.	Std.
20" Crossmember spacing	Std.	Std.
24'-0" Deck length (24'-4" clear deck length)	Std.	Std.
26'-0" Deck length (26'-0" clear deck length)	**1,350.00**	430
8'-6" (102") Deck width	Std.	Std.
12" Swinging/removable outriggers without planks	Std.	Std.
12" Double hook-on outriggers at front of deck	Std.	Std.
1-1/2" Apitong flooring (outside of mainbeams only)	Std.	Std.
1 1/2" Apitong flooring (between mainbeams)	**660.00**	500
1 1/2" Oak flooring outside of mainbeams. Oak flooring is not warranted.	**(400.00)**	(130)
Flooring secured with self tapping screws	Std.	Std.
Flooring secured with carriage bolts & floor clips	**360.00**	60
Omit outriggers	**(875.00)**	(270)
Outrigger plank spring hold-downs (no planks)	**130.00**	20
10" Outrigger planks (2" x 10" Oak) with spring loaded hold downs	**530.00**	470
10" Outrigger planks (2" x 10" Apitong) with spring loaded hold downs	**925.00**	500
Slope front of deck top down (with traction bars)	Std.	Std.
Twelve (12) Lash rings (bent style)	Std.	Std.
Expanded metal between mainbeams, each	**120.00**	20
Front folding ramps (steel with traction bars)	Std.	Std.
Front folding ramps (wood filled…must be specified)	N/C	N/C
Bucket trough at rear of deck (covered with steel plate)	Std.	Std.
Rear Section and Suspension		
Front transition ramp (41° slope/angle)	Std.	Std.
Ridewell air suspension (55" axle spacing) Includes Etnyre manual raising and lowering of air suspension (short moves only, manual pin relocation required)	Std.	Std.
Manual exhaust valve (on air suspension)	Std.	Std.
Over-ride chains on all axles	Std.	Std.
Anti-lock brakes - none (exceeds 120,000# GVWR)	N/A	N/A
Spring brakes - one axle standard, per additional axle	**235.00**	30
22,500# Capacity axles (5/8" wall)	Std.	Std.
Air lift (3rd axle only)	**1,100.00**	300
55" Axle spacing	Std.	Std.
Disc wheels, 10 stud, 22.5 x 8.25	Std.	Std.
Oil wheel seals	Std.	Std.
255/70R22.5(H) 16 PR tubeless radial tires	Std.	Std.
275/70R22.5(H) tires (increases rear deck height and rear section height/3 axles)	**990.00**	270
Alternate brands of tires	**consult factory**	

OPTIONAL FEATURES AND EQUIPMENT

Options on this model limited to only those shown below.

	PRTN55ETD3 Price	Wt. (Lbs)
Brackets for removable 4th axle	Std.	Std.
Air and electrical connections plumbed to rear of trailer (for future 4th axle)	**575.00**	30
4th Axle flip up and removable with Ridewell air suspension, standard axles and tires, 8'-6" wide. (If purchased with trailer includes air and electrical connections plumbed to rear of trailer)	**12,800.00**	2,820
22.5 x 8.25 Aluminum wheels outside polished, inside machine finished, outboard mount, hub piloted, 3 axles	**3,750.00**	(330)
22.5 x 8.25 Aluminum wheels, outside polished, inside machine finished, outboard mount, hub piloted, 4 axles	**5,000.00**	(440)
Spare tire and wheel (standard tire / shipped loose)	**800.00**	210
Boom well (full length of rear section, open bottom)	Std.	Std.
Boomwell cover plate (bolt-in 2-piece)	**385.00**	50
Load bearing bolsters between tires (drop style)	Std.	Std.
Load bearing bolsters rear of 3rd axle (drop style)	Std.	Std.
Flag holder slots in ends of bolsters and half bolster	Std.	Std.
Chain hook slots on bottom of bolsters	Std.	Std.
Wheel well covers (over tires only/ bolt-on one piece/ 3 axles / 1/4" floor plate)*	**2,975.00**	1,280
Wheel well covers (over tires only/ bolt-on one piece/ 3 axles / 1/2" floor plate)* For use with scrapers.	**4,000.00**	2,000
Automatic slack adjusters	Std.	Std.
Hubometer	**105.00**	10

Miscellaneous

Black finish	Std.	Std.
Red finish	N/C	0
Yellow finish	N/C	0
Additional side clearance lights (1 pair only)	**110.00**	5
Additional lash rings, each	**45.00**	5
LED (Light Emitting Diodes) lights, standard trailer	Std.	0
DURA BRITE aluminum wheels (per wheel) with aluminum wheel option	**200.00**	(28)
PRO STEEL wheels (in lieu of std steel)- (per wheel)	**110.00**	-

* Increases height by 4" (wheel covers raised 4" above tires).

E. D. ETNYRE & CO., Oregon, Illinois 61061-9778
1333 South Daysville Road • Phone 800/995-2116 or 815/732-2116 • Fax: 815/732-7400

Price Sheet No. C-RTN5055-12R1 Effective January 15, 2012
Supersedes C-RTN40/50-12R

All prices exclusive of Federal Excise Tax, FOB Destination and subject to any other applicable taxes. All weights subject to a plus or minus of 5%.

CUSTOM RTN SERIES
HYDRAULIC REMOVABLE GOOSENECK
FRONT AND REAR LOADING TRAILERS
55 Ton
Evenly distributed over entire deck length

STANDARD FEATURES AND EQUIPMENT

Load capacity - 55 tons evenly distributed over entire deck length
- 50 tons in any 16'-0" of deck with close coupled 4th axle

Hydraulic Removable Gooseneck
High lift gooseneck (35" travel)
Hydraulically operated by PTO/wet line
Pin and stirrup design
Pin setting - 16"
Swing clearance - 84"
Fifth wheel height - 50" loaded (adjustable 4 position - no blocks)
Gooseneck support arm
Vertical gooseneck locking pin (air operated)
Frame reinforced - For 4th axle.
Main frame - 4 beam - 16" fully cambered
Top flange reinforcement (full length ... outside flanges only)
Deck height - 22" (adjustable - no blocks)
Ground clearance - 6" (adjustable - no blocks)
Deck width - 8'-6" (102")
Crossmember spacing - 20"
Decking - 1 1/2" Apitong (open center)
Decking securement - deck screws
Front folding ramps - steel w/traction bars
Outriggers - 12" swinging/removable w/double hook-on at front
Bucket trough at rear of deck (covered with steel plate)
Extra low 1st crossmember in rear bridge
Half front bolsters with traction bars
Load bearing bolsters between axles (drop style)
Load bearing half bolsters at rear (drop style)
Boom well (full length including rear half bolster) (fully open / no cover)
Chain slots and flag holders in bolsters
Ridewell air suspension
±3" Adjustable ride height
Manual exhaust valve
Tires - (12)255/70R 22.5 (H) 16 PR tubeless radials
Wheels - 8.25 x 22.5 steel disc (white)
Hubs - Hub piloted with outboard drums
Axles - 22,500# (5/8" wall thickness) with oil bearings
Axle spacing - 55"
Over-ride chains on all axles
Anti-lock brakes - none (trailer exceeds 120,000# GVWR)
Brakes - 16 1/2" x 7" full air
Spring Brakes - one (1) axle (center axle)
Automatic slack adjusters
Lighting - L.E.D. type - rubber mounted - mid turn signal
Finish - shot blast / epoxy primer / urethane finish
Air lines - glad hands
Electrical - 7 way receptacle
Lash rings - 12 total (6 each side) bent style
Mud Flaps
Red and white conspicuity markings

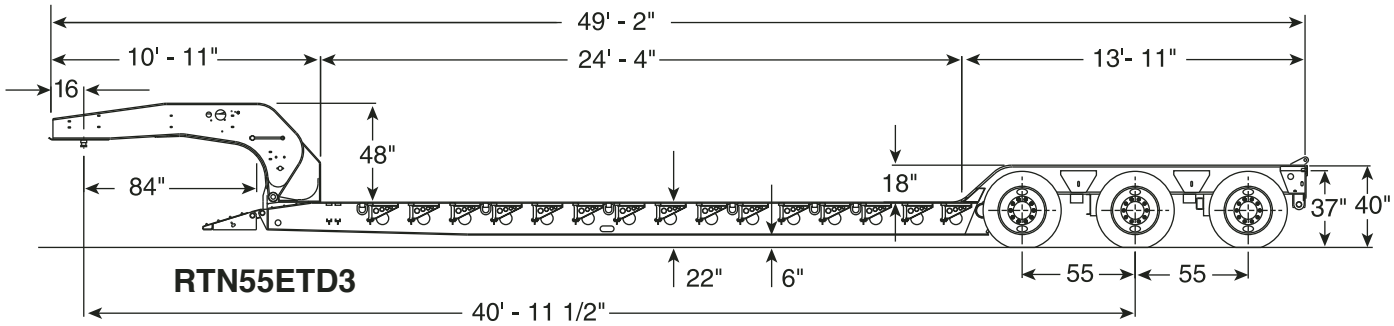

Model	Capacity	Deck	Axles	Tire Size	List Price	Wt. (Lbs.)
RTN55ETD3	55 tons evenly distributed 50 tons in 16'	24' Level	3	255/70R22.5 (H)	**$73,450.00**	19,900

OPTIONAL FEATURES AND EQUIPMENT

	RTN55ETD3 Price	Wt. (Lbs.)
Gooseneck		
11'-0" Gooseneck (84" swing clearance . . . adds 1'-0" to OAL)	Std.	Std.
12'-0" Gooseneck (96" swing clearance . . . adds 2'-0" to OAL)	**480.00**	150
13'-0" Gooseneck (108" swing clearance . . . adds 2'-0" to OAL)	**650.00**	400
13'-0" Gooseneck (with removable kingpin at 108" and 84")	**1,000.00**	550
13'-6" Gooseneck (114" swing clearance . . . adds 2'-6" to OAL)	**1,200.00**	460
14'-0" Gooseneck (120" swing clearance). . . adds 3'-0" to OAL)	**1,550.00**	700
18'-6" Gooseneck with flip (174" swing clearance . . adds to OAL) includes 60" flip extension	**11,500.00**	2,445
Additional kingpin setting, each	**400.00**	160
Optional fifth wheel heights	Consult Factory	
13 HP Honda engine package, self contained	**3,420.00**	470
18 HP Engine package self contained	**4,000.00**	585
Electric/hydraulic self contained system(maximum gooseneck radius of 108")	**2,000.00**	160
Piped for power pack and wet line operation	**495.00**	160
Cover for gooseneck load base (lockable)	**210.00**	70
10 gauge gooseneck fenders (8'-0" wide / bolt-on) includes clearance lights.	**1,360.00**	430
Chain and binder rack in back of gooseneck (not available w/power pkg)	**175.00**	75
Spare tire carrier (on top of gooseneck)	**220.00**	25
1/8" aluminium floor plate cover (on top of gooseneck/bolt-on)	Std.	Std.
Tool box with lid (over kingpin area)	**235.00**	90
Air actuated gooseneck to deck locking pin	Std.	Std.
Jumper hoses (gooseneck to tractor) (12' long other lengths available by request)	**495.00**	
Platform (Deck)		
Additional length		
2'-0" (26'-0" deck length . . . adds 2'-0" to OAL)	**1,400.00**	490
4'-0" (28'-0" deck length . . . adds 4'-0" to OAL)	**2,800.00**	980
8'-0" (96") deck width	**N/C**	(320)
8'-6" (102") deck width	Std.	Std.
9'-0" (108") deck width	**1,780.00**	680
10'-0" (120") deck width	**2,875.00**	1,180
Drop side deck (16-3/4" side height) no transition ramp	**2,795.00**	1,500
Drop side deck (14-1/4" side height/1/4" floor plate) no transition ramp	**6,050.00**	2,995
12" deep beams list	**3,300.00**	1500
14" deep beams	**2,255.00**	700
Beam deck (in lieu of standard deck)(detacable rear section recommended)	**(4,100.00)**	(1,900)
10' Beam deck extension (requires detachable rear section)	**16,060.00**	2,425
10' Standard deck extension (requires detachable rear section)	**21,560.00**	3,885
24' beam deck (to be used in lieu of standard deck) requires detachable rear section.	**22,550.00**	5,600
3 to 1 slope at rear of deck (increases length)	**1,595.00**	660
4 to 1 slope at rear of deck (increase length)	**1,870.00**	770
Sloping platform in lieu of double drop	**1,200.00**	450
Top flange reinforcement (full length . . . outside flanges only)	Std.	Std.
1 1/2" Apitong flooring (outside of main beams)	**Std.**	Std.
2" Apitong flooring (full 2" thick . . . in lieu of standard)	**440.00**	250
Center filled wood deck Apitong (thickness to match outside flooring)	**800.00**	800
Decking secured with carriage bolts and clips (in lieu of screws)	**360.00**	60
Outrigger planks - Oak 2" x 10" with spring loaded hold downs	**530.00**	460
Outrigger planks - Apitong 2" x 10" with spring loaded hold downs	**925.00**	500
Omit standard 12" outriggers	**(875.00)**	(270)
Double hook on outriggers, per pair	Std.	Std.
Front folding ramps (steel with traction bars)	Std.	Std.
Front folding ramps (wood filled ... must be specified)	**N/C**	N/C
Front folding wood double fold ramps for pavers, 60" long	**1,300.00**	550
Center hook on ramp - 31" long/wood filled/aluminium	**1,025.00**	170
Auxiliary crossmembers (outside of mainbeams between crossmembers)	**1,265.00**	330

OPTIONAL FEATURES AND EQUIPMENT

RTN55ETD3

Platform (Deck) - Cont'd	**Price**	**Wt. (Lbs.)**
Auxiliary crossmembers (full width between crossmembers)	**1,750.00**	450
Bucket trough in rear of deck (rear 3 crossmembers recessed/covered with 3/8" steelplate).	Std.	Std.
Expanded metal between mainbeams, per section	**120.00**	20
Storage area between mainbeams (steel plate with drain holes, per section)	**145.00**	30
Hinged/lockable cover for storage areas, each	**210.00**	40
Additional lash rings, each (bent style)	**45.00**	5
Recessed lash rings (in deck), each	**90.00**	10
Stake pockets	**90.00**	5
Frame Reinforcement		
Frame reinforcement for flip axle O O O^O	Std.	Std.
Trailer capacity concentrated in 10'	**1,225.00**	500
Frame reinforcement for single axle booster OO--O	**1,795.00**	650
Frame reinforcement for single axle booster OOO--O	**1,950.00**	750
Frame reinforcement for tandem axle booster OO--OO	**2,950.00**	1,100
Maximum number of axles in any configuration	4	
Axle extension (stinger bar) for 14'-1" spread (OO-O or OOO-O)	**10,890.00**	1,700
Axle extension (stinger bar) for 14'-1" spread (OO-OO)	**11,950.00**	2,200
Crank type support jack for stinger bar	**440.00**	120

Rear frame (rear section) heights increase when axle extension (stinger bars) feature is incorporated. Consult factory for actual dimensions.
Detachable rear section is recommended when axle extension (stinger bar) is utilized.

Wheel Area (Rear Section)		
Detachable rear section. Recommended with axle extensions (stinger bars)	**4,950.00**	560
Half front bolsters (transition ramp)	Std.	Std.
Wheel well covers, bolt-on, over tires only (3 axles/1/4" floor plate)	**2,975.00**	1,280
Wheel well covers, bolt-on, over tires only (3 axles/1/2" floor plate). For use with scrapers.	**4,000.00**	2,000
Steel covered (1/4" floor plate) full width rear deck (includes front transition ramp. Deletes boom well. Increases rear section height by 4 1/2"	**3,850.00**	1,500
Wood filled full width rear deck (includes front transition ramp, deletes boomwell, increases rear section height by 6")	**4,000.00**	1,900
Center filled rear section with wood between main beams (deletes boom well).	**575.00**	350
1/4" Floor plate between center beams (bolt-in)	Std.	Std.
Omit bolsters (front half bolster, bolsters between wheels and rear half bolster); light bar only at rear	**(710.00)**	(690)
Boom well (between axles and thru rear half bolster)	Std.	Std.
Boomwell cover plate (bolt-in 2-piece)	**385.00**	50
55" Axle spacing (air suspension)	Std.	Std.
60 1/2" Axle spacing (air suspension)	**880.00**	450
72" Axle spacing (air suspension) between axles 3 and 4.	**850.00**	250
36" Beavertail (requires blocking)	**1,975.00**	1,010
60" Rear folding ramps (spring assist, manual) wood filled (requires beavertail)	**1,325.00**	510
60" Rear folding ramps (spring assist, manual) steel with self cleaning traction bars (requires beavertail)	**1,450.00**	525
Hydraulic folding rear loading ramps 8' x 36" wide bi-fold with electric-hydraulic power (requires 12 v. jumper from tractor). Requires beavertail.	**5,885.00**	2,060
Wide load sign (removable)	**325.00**	120
Suspensions		
Ridewell air suspension includes Etnyre manual raising and lowering of air suspension (short moves only, manual pin relocation required . . . ±3")	Std.	Std
Hendrickson/Turner air suspension	**395.00**	165.
Neway air suspension	**1,400.00**	195
Multi-leaf spring suspension (changes length)	**(2,350.00)**	(300)
Neway TR series spring suspension or equivalent (changes length)	**3,000.00**	(250)
Manual exhaust valve	Std.	Std.
Air raise and lower valve (hand control valve/recommended on 4th axle)	**300.00**	10
Air lift rear axle (requires adjustment of leveling valve), 3rd axle only	**1,100.00**	300

OPTIONAL FEATURES AND EQUIPMENT

Suspensions (continued)	RTN55ETD3 Price	Wt. (Lbs.)
Scale-O-Matic (with one access station plumbed to drivers side of trailer at rear of deck)	**350.00**	30
Whittle Arm, lever for +3/-3 height control	**350.00**	5
Axles and Brakes		
Anti-lock brakes (2S/2M system)	**710.00**	50
Flip axle with air suspension, standard tires, axles and all connections (must add needed frame reinforcement). (Adds to overall length.)		
96" width	**12,700.00**	2,720
102" width	**12,750.00**	2,820
108" width	**13,100.00**	2,920
114" width	**13,250.00**	3,070
120" width	**13,350.00**	3,195
Deduct to make flip axle fixed	**(960.00)**	(490)
Half bolster on rear of flip axle	Std.	Std.
Light panel only (in lieu of half bolster on flip axle)	**(410.00)**	(160)
Connections for future removable 4th axle.	Std.	Std.
Air and electrical connections plumbed to rear of trailer.	**575.00**	30
3rd Flip axle in lieu of 3rd fixed (includes half bolster rear of 2nd and 3rd axle - trailer must be on air)	**1,650.00**	260
Spring brakes, per axle (one axle standard)	**235.00**	30
Dust shields (3 axles)	**210.00**	60
Cam savers tubes, per axle	**200.00**	
Hubometer	**105.00**	10
22,500# Capacity axles (5/8" wall)	Std.	Std.
25,000# Capacity axles (3/4" wall) per axle	**235.00**	35
Over-ride chains on all axles.	Std.	Std.
Rear lugs and ears for multiple flip axles	**2,000.00**	200
Tires and Wheels		
255/70 R. 22.5 (H) 16 PR tubeless radial tires	Std.	Std.
275R/70R22.5 (H) radial tires (3 axles)	**1,150.00**	270
11R22.5 (G) radial tires (3 axles)	**960.00**	500
11R22.5 (H) radial tires (3 axles)	**1,650.00**	600
22.5 x 8.25 steel disc wheels (hub piloted)	Std.	Std.
Cast spoke wheels with 22.5 x 8.25 rims, 3 axles, 5 spoke	**175.00**	45
Cast spoke wheels with 22.5 x 8.25 rims, 4 axles, 5 spoke	**260.00**	60
22.5 x 8.25 Aluminum wheels, outside polished, inside machine finished, outboard mount, hub piloted, 3 axles	**3,750.00**	(330)
22.5 x 8.25 Aluminum wheels, outside polished, inside machine finished, outboard mount, hub piloted, 4 axles	**5,000.00**	(440)
DURA BRITE aluminum wheels (per wheel) with aluminum wheel option	**200.00**	(28)
PRO STEEL wheels (in lieu of std steel)- (per wheel)	**110.00**	**-**
Electrical		
Additional side clearance lights (per pair)	**110.00**	5
Additional mid turn signals (per pair)	**95.00**	10
3rd Tail light package (red/tail light circuit)	**95.00**	10
Strobe lights for rear - (yellow / built into rear light bar)	**275.00**	10
Strobe lights for rear - (2 yellow lights magnetically attached)	**460.00**	10
Flasher kit for rear lights including wet cell battery, recharging feature)	**385.00**	50
New York amber lights (3rd amber tail light)	**140.00**	15
LED (Light Emitting Diodes) lights	Std	0
Light bar (2-clear work lights, 2- red tailights) in back of gooseneck	**550.00**	
Paint		
Black finish	Std.	Std.
Yellow finish	N/C	0
Red finish	N/C	0
Paint, other than standard color enamel, color matched (does not include polyurethene, metallics and Imron finishes)	**990.00**	0

E. D. ETNYRE & CO., Oregon, Illinois 61061-9778
1333 South Daysville Road • Phone: 800/995-2116 or 815/732-2116 • Fax: 815/732-7400

Price Sheet No. C-5055-PS-12R1 Effective January 15, 2012
Supersedes C-5055-PS-12R

All prices exclusive of Federal Excise Tax, FOB Destination and subject to any other applicable taxes. All weights subject to a plus or minus of 5%.

PRODUCTION
PAVER SPECIAL SERIES
PS5055 "BLACKHAWK"
HYDRAULIC REMOVABLE GOOSENECK
FRONT LOADING TRAILERS
55 Ton
Evenly distributed over entire deck length
Options on this model limited to only those shown below.

STANDARD FEATURES AND EQUIPMENT

Load capacity - 55 tons evenly distributed over entire deck length
- 50 tons in any 16'-0" of deck

Hydraulic Removable Gooseneck
High lift gooseneck (35" travel)
Hydraulically operated by PTO/wet line
Pin and stirrup design
Pin setting - 16"
Swing clearance - 84"
Fifth wheel height - 50" loaded (adjustable 4 position - no blocks)
Gooseneck support arm
Vertical gooseneck locking pin (air operated)
Main frame - 4 beam - 16" fully cambered
Deck height - 22" (adjustable - no blocks)
Ground clearance - 6" (adjustable - no blocks)
Deck width - 8'-6" (102")
Crossmember spacing - 20"
Decking - 1 1/2" Apitong (full width)
Decking securement - deck screws
Front folding ramps - 41" adjustable width (wood filled)
Outriggers - none (weldments included for later installation of outriggers)
Tapered front beams (8 3/8" deep)
3:1 sloped deck (18º) Covered with 1 1/2" Apitong
Full width rear deck Covered with 1 1/2" Apitong
Top flange reinforcement (full length - outside flanges only)
Flag holders in bolsters
Ridewell air suspension
Manual exhaust valve
±3" Adjustable ride height
Tires - 255/70R 22.5 (H) 16 PR tubeless radials
Wheels - 8.25 x 22.5 steel disc (white)
Hubs - Hub piloted with outboard drums
Axles - 22,500# (5/8" wall thickness) with oil bearings
Axle spacing - 55"
Over-ride chains on all axles
Anti-lock brakes - none (trailer exceeds 120,000# GVWR)
Brakes - 16 1/2" x 7" full air
Spring brakes - one (1) axle (center axle)
Automatic slack adjusters
Lighting - L.E.D. type - rubber mounted - mid turn signal
Amber LED strobes in 3rd tail light position, with battery and rechargeable feature
Finish - shot blast / epoxy primer / urethane finish
Air lines - glad hands
Electrical - 7 way receptacle
Lash rings - 16 total (6 each side of deck, bent style/ 2 each side rear, flat style)
Mud Flaps
Red and white conspicuity markings

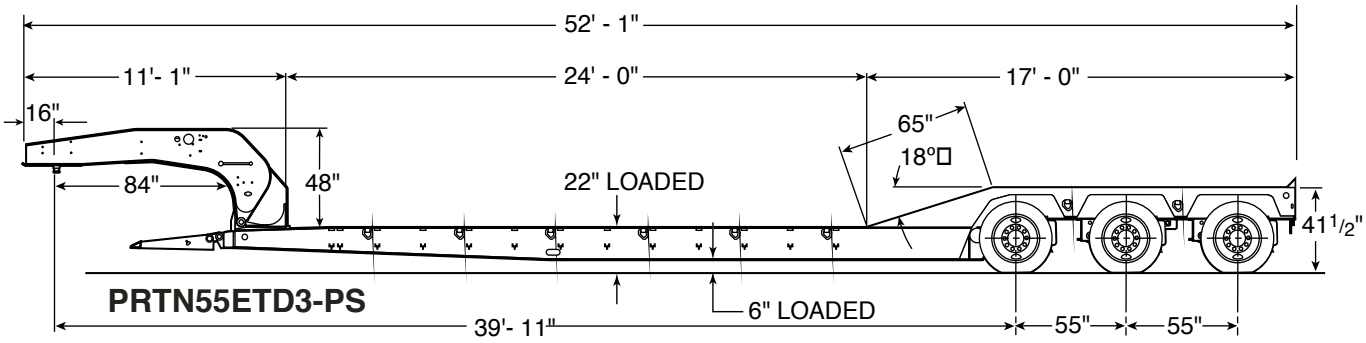

Model	Capacity	Deck	Axles	Tire Size	List Price	Wt. (Lbs.)
PRTN55ETD3-PS	55 tons evenly distributed	24' Level	3	255/70R22.5 (H)	**$77,275.00**	21,820#

OPTIONAL FEATURES AND EQUIPMENT

Options on this model limited to only those shown below.

	PRTN55ETD3-PS Price	Wt. (Lbs)
Gooseneck		
50" Loaded 5th wheel height (adjustable ±2")	Std.	Std.
11'-0" Gooseneck (84" swing clearance)	Std.	Std.
12'-0" Gooseneck (96" swing clearance)	**480.00**	150
13'-0" Gooseneck (108" swing clearance) (maximum)	**650.00**	400
13'-0" Gooseneck (with removable kingpin at 108" and 84")	**1,000.00**	550
10 Gauge gooseneck fenders (8'-0" wide/bolt-on) includes clearance lights	**1,360.00**	370
Gooseneck support arm	Std.	Std.
Wet line/P.T.O. set-up	Std.	Std.
Piped for power package & wet line operation	**495.00**	160
13 H.P. Honda engine power package mounted in gooseneck base including half cover and controls remoted to side of gooseneck	**3,420.00**	470
1/8" aluminium floor plate for top of gooseneck (bolt-on)	Std.	Std.
Hinged and lockable cover for rear of gooseneck	**210.00**	70
Chain and binder rack in back of gooseneck (not available with power package)	**175.00**	75
Jumper hoses (gooseneck to tractor) (12' long other lengths available by request)	**495.00**	
Platform (Deck)		
Frame reinforcing for future 4th axle (not available)	**N/A**	N/A
Concentrated load in 10'-0" (not available)	**N/A**	N/A
Four (4) beam drop deck design	Std.	Std.
20" Crossmember spacing	Std.	Std.
24'-0" Deck length (24'-4" clear deck length)	Std.	Std.
26'-0" Deck length (26'-0" clear deck length)	**1,420.00**	430
8'-6" (102") Deck width	Std.	Std.
12" Swinging/removable outriggers without planks; includes 12" Double hook-on outriggers at front of deck	**960.00**	270
1-1/2" Apitong flooring (full width)	Std.	Std.
1 1/2" Oak flooring (Oak flooring is not warranted)	**(600.00)**	(230)
Flooring secured with self tapping screws	Std.	Std.
Flooring secured with carriage bolts & floor clips (deck and rear section)	**880.00**	90
10" Outrigger planks (2" x 10" Oak) (Loose)	**530.00**	470
10" Outrigger planks (2" x 10" Apitong) (Loose)	**925.00**	500
Slope front of deck top down (no traction bars)	Std.	Std.
Sixteen (16) Lash rings (6 each side of deck, bent style / 2 each side rear, flat style)	Std.	Std.
Front folding ramps (wood filled/ 41" long/ adjustable width)	Std.	Std.
Center hook-on ramp (41" long) wood filled, aluminium- one piece	**1,025.00**	170
Center hook-on ramp (41" long) wood filled, aluminium- two piece, stored on gooseneck	**1,540.00**	200
Rear Section and Suspension		
Open Boomwell, 2 extra low cross members (no cover)	**2,500.00**	0
Front transition ramp (18° slope/angle/ full width 1 1/2" Apitong flooring)	Std.	Std.
Ridewell air suspension (55" axle spacing) Includes Etnyre manual raising and lowering of air suspension (short moves only, manual pin relocation required)	Std.	Std.
Manual exhaust valve (on air suspension)	Std.	Std.
Over-ride chains on all axles	Std.	Std.
Anti-lock brakes - none (exceeds 120,000# GVWR)	N/A	N/A
Spring brakes - one (1) axle standard, per additional axle	**235.00**	30
22,500# Capacity axles (5/8" wall)	Std.	Std.
Air lift (3rd axle only)	**1,100.00**	300
55" Axle spacing	Std.	Std.
Disc wheels, 10 stud, 22.5 x 8.25	Std.	Std.
Oil wheel seals	Std.	Std.
255/70R22.5(H) 16 PR tubeless radial tires	Std.	Std.
Alternate brands of tires	**consult factory**	
22.5 x 8.25 Aluminum wheels, outside polished, inside machine finished, outboard mount, hub piloted, 3 axles	**3,750.00**	(330)

OPTIONAL FEATURES AND EQUIPMENT

Options on this model limited to only those shown below.

	PRTN55ETD3-PS Price	Wt. (Lbs)
DURA BRITE aluminum wheels (per wheel)	**200.00**	(28)
PRO STEEL wheels (in lieu of std steel)- (per wheel)	**110.00**	-
275/70R Tires. Yokohama RY103	**1,150.00**	270
25,000# axles	**705.00**	105
Spare tire and wheel (standard tire/loose)	**880.00**	210
Flag holder slots in ends of bolsters and half bolster	Std.	Std.
Automatic slack adjusters	Std.	Std.
Hubometer	**105.00**	10
Miscellaneous		
Black finish	Std.	Std.
Red finish	N/C	0
Yellow finish	N/C	0
Additional side clearance lights (1 pair only)	**110.00**	5
Additional lash rings, each	**45.00**	5
LED (Light Emitting Diodes) lights	Std.	0

Note: For custom options contact factory

E. D. ETNYRE & CO., Oregon, Illinois 61061-9778
1333 South Daysville Road • Phone: 800/995-2116 or 815/732-2116 • Fax: 815/732-7400

Price Sheet No. C-5500-12R1 Effective January 15, 2012
Supersedes C-5500-12R

All prices exclusive of Federal Excise Tax, FOB Destination and subject to any other applicable taxes. All weights subject to a plus or minus of 5%.

PRODUCTION PRTN SERIES
5500P "BLACKHAWK"
HYDRAULIC REMOVABLE GOOSENECK
FRONT AND REAR LOADING TRAILERS
55 Ton
(in any 12'-0" of deck)
Options on this model limited to only those shown below.

STANDARD FEATURES AND EQUIPMENT

Load capacity - 55 tons in any 12'-0" of deck in 3+1 (14'-1" spread) axle configuration
Hydraulic Removable Gooseneck
High lift gooseneck (42" travel)
Hydraulically operated by PTO/wet line
Pin and stirrup design
Pin setting - 16"
Swing clearance - 108"
Fifth wheel height - 50" loaded (adjustable 4 position - no blocks)
Gooseneck support arm
Vertical gooseneck locking pin (air operated)
Frame reinforced-For 3+1 (14'-1" spacing) or close coupled 4th axle.
Main frame - 4 beam - 16" fully cambered
Top flange reinforcement (full length ... outside flanges only)
Deck height - 22" (adjustable - no blocks)
Ground clearance - 6" (adjustable - no blocks)
Deck width - 8'-6" (102")
Crossmember spacing - 20"
Decking - 1 1/2" Apitong (open center)
Decking securement - deck screws
Front folding ramps - steel w/traction bars
Outriggers - 12" swinging/removable w/double hook-on at front
Bucket trough at rear of deck (covered with steel plate)
Half front bolsters with traction bars
Extra low 1st crossmember in rear bridge
Load bearing bolsters between axles (drop style)
Load bearing half bolsters at rear (drop style)
Boom well (full length including rear half bolster)
Chain slots and flag holders in bolsters
Ridewell air suspension
±3" Adjustable ride height
Manual exhaust valve
Tires - (12)275/70R 22.5 (H) 16 PR tubeless radials
Wheels - 8.25 x 22.5 steel disc (white)
Hubs - Hub piloted with outboard drums
Axles - 25,000# (3/4" wall thickness) with oil bearings
Axle spacing - 55"
Over-ride chains on all axles
Anti-lock brakes - none (trailer exceeds 120,000# GVWR)
Brakes - 16 1/2" x 7" full air
Spring Brakes - one (1) axle (center axle)
Automatic slack adjusters
Lighting - L.E.D. type - rubber mounted - mid turn signal
Finish - shot blast / epoxy primer / urethane finish
Air lines - glad hands
Electrical - 7 way receptacle
Lash rings - 12 total (6 each side) bent style
Mud Flaps
Red and white conspicuity markings

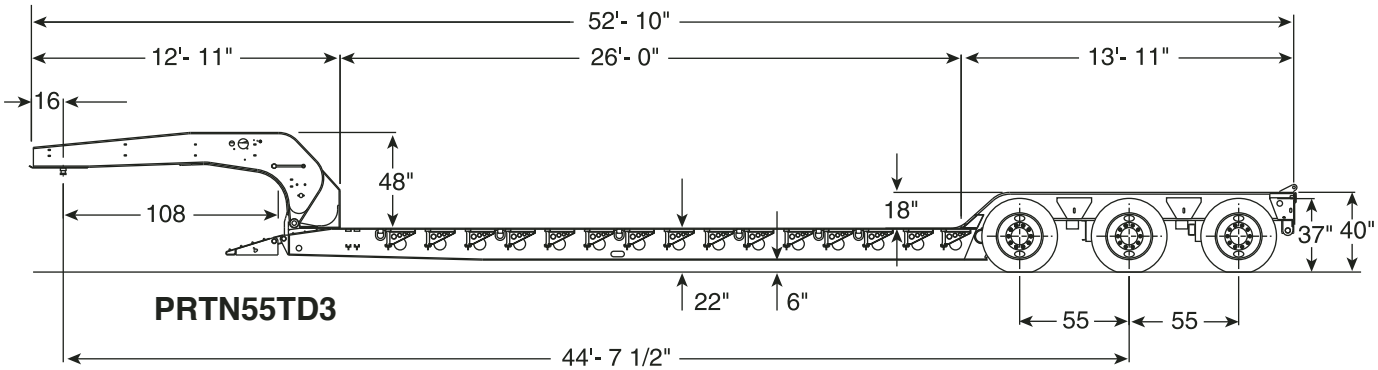

Model	Capacity	Deck	Axles	Tire Size	List Price	Wt. (Lbs.)
PRTN55TD3	55	26' Level	3	275/70R22.5 (H)	**$74,785.00**	21,760#

OPTIONAL FEATURES AND EQUIPMENT

Options on this model limited to only those shown below.

	PRTN55TD3 Price	Wt. (Lbs)
Gooseneck		
50" Loaded 5th wheel height (adjustable ±2")	Std.	Std.
11'-0" Gooseneck (84" swing clearance)	**(400)**	(400)
12'-0" Gooseneck (96" swing clearance)	**(250.00)**	(150)
13'-0" Gooseneck (108" swing clearance)(maximum)	Std.	Std.
13'-0" Gooseneck (with removable kingpin at 108" and 84")	**330.00**	150
10 Gauge gooseneck fenders (8'-0" wide/bolt-on) includes clearance lights.	**1,360.00**	370
Gooseneck support arm	Std.	Std.
Wet line/P.T.O. set-up	Std.	Std.
Piped for power package & wet line operation	**495.00**	160
13 H.P. Honda engine power package mounted in gooseneck base including half cover and controls remoted to side of gooseneck	**3,420.00**	470
1/8" aluminium floor plate for top of gooseneck (bolt-on)	Std.	Std.
Hinged and lockable cover for rear of gooseneck (bolt-on)	**210.00**	70
Chain and binder rack in back of gooseneck (not available with power package)	**175.00**	75
Jumper hoses (gooseneck to tractor) (12' long other lengths available by request)	**495.00**	
Platform (Deck)		
Frame reinforcing for future 3+1 14'-1" spreader bar or close coupled 4th axle	Std.	Std.
Four (4) beam drop deck design	Std.	Std.
Top flange reinforcement (full length…outside flanges only)	Std.	Std.
20" Crossmember spacing	Std.	Std.
26'-0" Deck length (26'-0" clear deck length)	Std.	Std.
24'-0" Deck length (24'-4" clear deck length)	**(820.00)**	(430)
8'-6" (102") Deck width	Std.	Std.
12" Swinging/removable outriggers without planks	Std.	Std.
12" Double hook-on outriggers at front of deck	Std.	Std.
1-1/2" Apitong flooring (outside of mainbeams only)	Std.	Std.
1 1/2" Apitong flooring (between mainbeams)	**660.00**	500
1 1/2" Oak flooring outside of mainbeams. Oak flooring is not warranted.	**(400.00)**	(130)
Flooring secured with self tapping screws	Std.	Std.
Flooring secured with carriage bolts & floor clips	**360.00**	60
Omit outriggers	**(875.00)**	(270)
Outrigger plank spring hold-downs (no planks)	**130.00**	20
10" Outrigger planks (2" x 10" Oak) with spring loaded hold downs	**530.00**	470
10" Outrigger planks (2" x 10" Apitong) with spring loaded hold downs	**925.00**	500
Slope front of deck top down (with traction bars)	Std.	Std.
Twelve (12) Lash rings(bent style)	Std.	Std.
Expanded metal between mainbeams, each	**120.00**	20
Front folding ramps (steel with traction bars)	Std.	Std.
Front folding ramps (wood filled…must be specified)	N/C	N/C
Bucket trough at rear of deck (covered with steel plate)	Std.	Std.
Rear Section and Suspension		
Front transition ramp (41° slope/angle)	Std.	Std.
Ridewell air suspension (55" axle spacing) Includes Etnyre manual raising and lowering of air suspension (short moves only, manual pin relocation required)	Std.	Std.
Manual exhaust valve (on air suspension)	Std.	Std.
Over-ride chains on all axles	Std.	Std.
Anti-lock brakes - none (exceeds 120,000# GVWR)	N/A	N/A
Spring brakes - one axle standard, per additional axle	**235.00**	30
25,000# Capacity axles (3/4" wall)	Std.	Std.
Air lift (3rd axle only)	**1,100.00**	300
55" Axle spacing	Std.	Std.
Disc wheels, 10 stud, 22.5 x 8.25	Std.	Std.
Oil wheel seals	Std.	Std.
275/70R22.5(H) 16 PR tubeless radial tires	Std.	Std.
Alternate brands of tires	**consult factory**	

OPTIONAL FEATURES AND EQUIPMENT

Options on this model limited to only those shown below.

	PRTN55TD3 Price	Wt. (Lbs)
Rear Section and Suspension (continued)		
Connections for removable 4th axle and 14'-1" spreader bar	Std.	Std.
Air and electrical connections plumbed to rear of trailer (for future spreader bar and/or 4th axle)	**575.00**	30
4th Axle flip up and removable with Ridewell air suspension, standard axles and tires, 8'-6" wide. (If purchased with trailer includes air and electrical connections plumbed to rear of trailer)	**13,300.00**	2,910
Spreader bar (stinger) for 14'-1" spread	**10,900.00**	1,700
22.5 x 8.25 Aluminum wheels outside polished, inside machine finished, outboard mount, hub piloted, 3 axles	**3,750.00**	(330)
22.5 x 8.25 Aluminum wheels, outside polished, inside machine finished, outboard mount, hub piloted, 4 axles	**5,000.00**	(440)
DURA BRITE aluminum wheels (per wheel) with aluminum wheel option	**200.00**	(28)
PRO STEEL wheels (in lieu of std steel)- (per wheel)	**110.00**	**-**
Spare tire and wheel (standard tire / shipped loose)	**900.00**	230
Boom well (full length of rear section, open bottom)	Std.	Std.
Boomwell cover plate (bolt-in 2-piece)	**385.00**	50
Load bearing bolsters between tires (drop style)	Std.	Std.
Load bearing bolsters rear of 3rd axle (drop style)	Std.	Std.
Flag holder slots in ends of bolsters and half bolster	Std.	Std.
Chain hook slots on bottom of bolsters	Std.	Std.
Wheel well covers (over tires only/ bolt-on one piece/ 3 axles / 1/4" floor plate)*	**2,975.00**	1,280
Wheel well covers (over tires only/ bolt-on one piece/ 3 axles / 1/2" floor plate)* For use with scrapers.	**4,000.00**	2,000
Automatic slack adjusters	Std.	Std.
Hubometer	**105.00**	10
Miscellaneous		
Black finish	Std.	Std.
Red finish	N/C	0
Yellow finish	N/C	0
Additional side clearance lights (1 pair only)	**110.00**	5
Additional lash rings, each	**45.00**	5
LED (Light Emitting Diodes) lights	Std.	0

* Increases height by 4" (wheel covers raised 4" above tires).

E. D. ETNYRE & CO., Oregon, Illinois 61061-9778
1333 South Daysville Road • Phone: 800/995-2116 or 815/732-2116 • Fax: 815/732-7400

Price Sheet No. C-RTN55-12R1 Effective January 15, 2012
Supercedes C-RTN55-12R

All prices exclusive of Federal Excise Tax, FOB Destination and subject to any other applicable taxes. All weights subject to a plus or minus of 5%.

CUSTOM RTN SERIES
HYDRAULIC REMOVABLE GOOSENECK
FRONT AND REAR LOADING TRAILERS
55 Ton
(in any 12'-0" of deck)

STANDARD FEATURES AND EQUIPMENT

Load capacity - 55 tons in any 12'-0" of deck in 3+1 (14'-1" spread) axle configuration
Hydraulic Removable Gooseneck
High lift gooseneck (42" travel)
Hydraulically operated by PTO/wet line
Pin and stirrup design
Pin setting - 16"
Swing clearance - 108"
Fifth wheel height - 50" loaded (adjustable 4 position - no blocks)
Gooseneck support arm
Vertical gooseneck locking pin (air operated)
Frame reinforced-For 3+1 (14'-1" spacing) or close coupled 4th axle.
Main frame - 4 beam - 16" fully cambered
Top flange reinforcement (full length ... outside flanges only)
Deck height - 22" (adjustable - no blocks)
Ground clearance - 6" (adjustable - no blocks)
Deck width - 8'-6" (102")
Crossmember spacing - 20"
Decking - 1 1/2" Apitong (open center)
Decking securement - deck screws
Front folding ramps - steel w/traction bars
Outriggers - 12" swinging/removable w/double hook-on at front
Bucket trough at rear of deck (covered with steel plate)
Half front bolsters with traction bars
Extra low 1st crossmember in rear bridge
Load bearing bolsters between axles (drop style)
Load bearing half bolsters at rear (drop style)
Boom well (full length including rear half bolster)
Chain slots and flag holders in bolsters
Ridewell air suspension
±3" Adjustable ride height
Manual exhaust valve
Tires - (12)275/70R 22.5 (H) 16 PR tubeless radials
Wheels - 8.25 x 22.5 steel disc (white)
Hubs - Hub piloted with outboard drums
Axles - 25,000# (3/4" wall thickness) with oil bearings
Axle spacing - 55"
Over-ride chains on all axles
Anti-lock brakes - none (trailer exceeds 120,000# GVWR)
Brakes - 16 1/2" x 7" full air
Spring Brakes - one (1) axle (center axle)
Automatic slack adjusters
Lighting - L.E.D. type - rubber mounted - mid turn signal
Finish - shot blast / epoxy primer / urethane finish
Air lines - glad hands
Electrical - 7 way receptacle
Lash rings - 12 total (6 each side) bent style
Mud Flaps
Red and white conspicuity markings

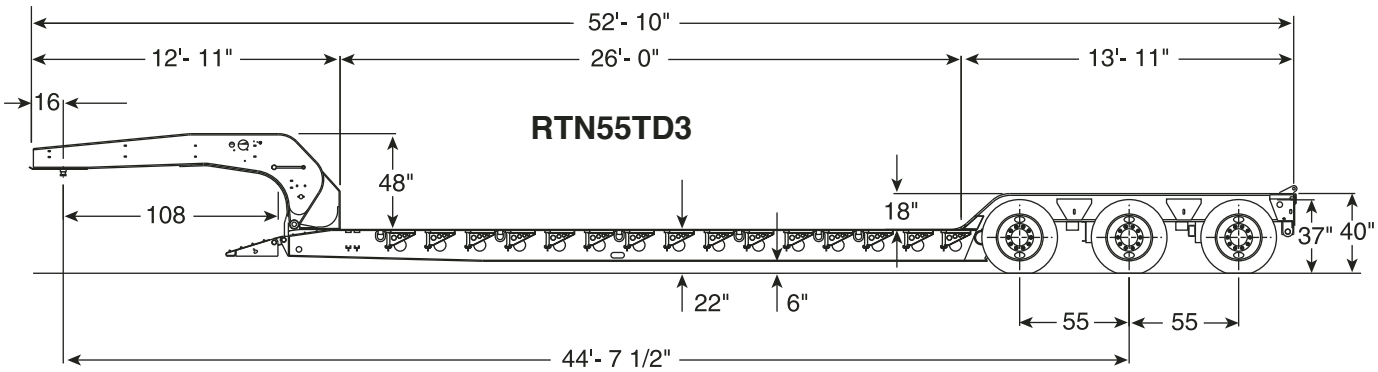

Model	Capacity	Deck	Axles	Tire Size	List Price	Wt. (Lbs.)
RTN55TD3	55	26' Level	3	275/70R22.5 (H)	**$78,550.00**	22,160#

OPTIONAL FEATURES AND EQUIPMENT

	RTN55TD3 Price	Wt. (Lbs.)
Gooseneck		
12'-0" Gooseneck (96" swing clearance deletes 1'-0" from OAL)	**$(250.00)**	(150)
13'-0" Gooseneck (108" swing clearance)	Std.	Std.
13'-0" Gooseneck (with removable kingpin at 108" and 84")	**330.00**	150
13'-6" Gooseneck (114" swing clearance . . . adds 6" to OAL)	**600.00**	60
14'-0" Gooseneck (120" swing clearance). . . adds 0" to OAL)	**1,200.00**	300
18'-6" Gooseneck with flip (174" swing clearance . . adds to OAL) includes 60" flip extension	**10,500.00**	2,145
Additional kingpin setting, each	**400.00**	160
Optional fifth wheel heights	Consult Factory	
13 HP Honda engine package, self contained	**3,420.00**	470
Electric/hydraulic self contained system(maximum gooseneck radius of 108")	**2,000.00**	160
Piped for power pack and wet line operation	**400.00**	160
Cover for gooseneck load base (lockable)	**210.00**	70
10 gauge gooseneck fenders (8'-0" wide / bolt-on) includes clearance lights.	**1,360.00**	430
Chain and binder rack in back of gooseneck (not available w/power pkg)	**175.00**	75
Spare tire carrier (on top of gooseneck)	**220.00**	25
1/8" aluminium floor plate cover (on top of gooseneck/bolt-on)	Std.	Std.
Tool box with lid (over kingpin area)	**235.00**	90
Air actuated gooseneck to deck locking pin	Std.	Std.
Jumper hoses (gooseneck to tractor) (12' long other lengths available by request)	**495.00**	
Platform (Deck)		
Additional length		
24'-0" deck length (less 2'-0")	N/C	(490)
25'-0" deck length (less 1'-0")	N/C	(245)
27'-0" deck length (plus 1'-0")	**800.00**	270
28'-0" deck length (plus 2'-0")	**1,600.00**	540
8'-0" (96") deck width	**N/C**	(320)
8'-6" (102") deck width	Std.	Std.
9'-0" (108") deck width	**1,800.00**	680
10'-0" (120") deck width	**2,875.00**	1,180
Drop side deck (16-3/4" side height) no transition ramp	**2,795.00**	1,500
Drop side deck (14-1/4" side height/1/4" floor plate) no transition ramp	**6,050.00**	2,995
Beam deck (in lieu of standard deck) (detachable rear section recommended)	**(4,100.00)**	(1,900)
10' Beam deck extension (requires detachable rear section)	**16,060.00**	2,425
10' Standard deck extension (requires detachable rear section)	**21,560.00**	3,885
24' beam deck (to be used in lieu of standard deck) requires detachable rear section.	**22,550.00**	5,600
3 to 1 slope at rear of deck (increases length)	**1,600.00**	660
4 to 1 slope at rear of deck (increase length)	**1,875.00**	770
Sloping platform in lieu of double drop	**1,150.00**	450
Top flange reinforcement (full length . . . outside flanges only)	Std.	Std.
1 1/2" Apitong flooring (outside of main beams)	**Std.**	Std.
2" Apitong flooring (full 2" thick . . . in lieu of standard)	**440.00**	250
Center filled wood deck Apitong (thickness to match outside flooring)	**800.00**	800
Decking secured with carriage bolts and clips (in lieu of screws)	**360.00**	60
Outrigger planks - Oak 2" x 10" with spring loaded hold downs	**530.00**	460
Outrigger planks - Apitong 2" x 10" with spring loaded hold downs	**925.00**	500
Omit standard 12" outriggers	**(875.00)**	(270)
Double hook on outriggers, per pair	Std.	Std.
Front folding ramps (steel with traction bars)	Std.	Std.
Front folding ramps (wood filled ... must be specified)	**N/C**	N/C
Front folding wood double fold ramps for pavers, 60" long	**1,300.00**	550
Center hook on ramp - 31" long/wood filled/aluminium	**1,025.00**	170
Auxiliary crossmembers (outside of mainbeams between crossmembers)	**1,265.00**	330
Auxiliary crossmembers (full width between crossmembers)	**1,750.00**	450

OPTIONAL FEATURES AND EQUIPMENT

RTN55TD3

Platform (Deck) - Cont'd	**Price**	**Wt. (Lbs.)**
Bucket trough in rear of deck (rear 3 crossmembers recessed/covered with 3/8" steelplate.)	Std.	Std.
Expanded metal between mainbeams, per section	**120.00**	20
Storage area between mainbeams (steel plate with drain holes, per section)	**145.00**	30
Hinged/lockable cover for storage areas, each	**210.00**	40
Additional lash rings, each (bent style)	**45.00**	5
Recessed lash rings (in deck), each	**90.00**	10
Stake pockets	Consult Factory	

Frame Reinforcement

Frame reinforcement for flip axle O O O^O	Std.	Std.
Trailer capacity concentrated in 12'	Std.	Std.
Frame reinforcement for single axle booster OOO--O	Std.	Std.
Frame reinforcement for tandem axle booster OO--OO	**1,100.00**	390
Maximum number of axles in any configuration	4	
Axle extension (stinger bar) for 14'-1" spread (OO-O or OOO-O)	**11,000.00**	1,700
Axle extension (stinger bar) for 14'-1" spread (OO-OO)	**11,850.00**	2,200
Crank type support jack for stinger bar	**440.00**	120

Rear frame (rear section) heights increase when axle extension (stinger bars) feature is incorporated. Consult factory for actual dimensions.
Detachable rear section is recommended when axle extension (stinger bar) is utilized.

Wheel Area (Rear Section)

Detachable rear section. Recommended with axle extensions (stinger bars)	**4,950.00**	560
Half front bolsters (transition ramp)	Std.	Std.
Wheel well covers, bolt-on, over tires only (3 axles/1/4" floor plate)	**2,975.00**	1,280
Wheel well covers, bolt-on, over tires only (3 axles/1/2" floor plate) For use with scrapers	**4,000.00**	2,000
Steel covered (1/4" floor plate) full width rear deck (includes front transition ramp. Deletes boom well. Increases rear section height by 4 1/2"	**3,850.00**	1,500
Wood filled full width rear deck (includes front transition ramp, deletes boomwell,increases rear section height by 6")	**4,000.00**	1,900
Center filled rear section with wood between main beams (deletes boom well).	**575.00**	350
1/4" Floor plate between center beams (bolt-in)	Std.	Std.
Omit bolsters (front half bolster, bolsters between wheels and rear half bolster); light bar only at rear	**(710.00)**	(690)
Boom well (between axles and thru rear half bolster)	Std.	Std.
Boomwell cover plate (bolt-in 2-piece)	**385.00**	50
55" Axle spacing (air suspension)	Std.	Std.
60 1/2" Axle spacing (air suspension)	**880.00**	450
72" Axle spacing (air suspension) between axles 3 and 4.	**850.00**	250
36" Beavertail (requires blocking)	**1,975.00**	1,010
60" Rear folding ramps (spring assist, manual) wood filled (requires beavertail)	**1,325.00**	510
60" Rear folding ramps (spring assist, manual) steel with self cleaning traction bars (requires beavertail)	**1,450.00**	525
Hydraulic folding rear loading ramps 8' x 36" wide bi-fold with electric-hydraulic power (requires 12 v. jumper from tractor). Requires beavertail.	**5,885.00**	2,060
Wide load sign (removable)	**325.00**	120

Suspensions

Ridewell air suspension includes Etnyre manual raising and lowering of air suspension (short moves only, manual pin relocation required . . . ±3")	Std.	Std
Hendrickson/Turner air suspension	**395.00**	165.
Neway air suspension	**1,400.00**	195
Multi-leaf spring suspension (changes length)	**(2,350.00)**	(300)
Neway TR series spring suspension or equivalent (changes length)	**3,000.00**	(250)
Manual exhaust valve	Std.	Std.

OPTIONAL FEATURES AND EQUIPMENT

	RTN55TD3 Price	Wt. (Lbs.)
Suspensions (continued)		
Air raise and lower valve (hand control valve/recommended on 4th axle)	**300.00**	10
Air lift rear axle (requires adjustment of leveling valve), 3rd axle only	**1,100.00**	300
Scale-O-Matic (with one access station plumbed to drivers side of trailer at rear of deck)	**350.00**	30
Axles and Brakes		
Anti-lock brakes (2S/2M system)	**710.00**	50
Flip axle with air suspension, standard tires, axles and all connections (must add needed frame reinforcement). (Adds to overall length.)		
96" width	**13,250.00**	2,815
102" width	**13,300.00**	3,020
108" width	**13,525.00**	3,150
114" width	**13,900.00**	3,270
120" width	**14,150.00**	3,395
Deduct to make flip axle fixed	**(1,060.00)**	(500)
Half bolster on rear of flip axle	Std.	Std.
Light panel only (in lieu of half bolster on flip axle)	**(410.00)**	(160)
Connections for future removable 4th axle.	Std.	Std.
Air and electrical connections plumbed to rear of trailer.	**575.00**	30
3rd Flip axle in lieu of 3rd fixed (includes half bolster rear of 2nd and 3rd axle - trailer must be on air)	**1,650.00**	290
Spring brakes, per axle (one axle standard)	**235.00**	30
Dust shields (3 axles)	**210.00**	60
Hubometer	**105.00**	10
25,000# Capacity axles (3/4" wall)	Std.	Std.
Over-ride chains on all axles.	Std.	Std.
Rear lugs and ears for multiple flip axles	**2,000.00**	200
Tires and Wheels		
275/70 R. 22.5 (H) 16 PR tubeless radial tires	Std.	Std.
255/70 R. 22.5 (H) 16 PR tubeless radial tires (3 axles)	**(1,500.00)**	(270)
11R22.5 (H) radial tires (3 axles)	**(0)**	(640)
11R24.5 (H) radial tires (3 axles)	**275.00**	780
22.5 x 8.25 steel disc wheels (hub piloted)	Std.	Std.
Cast spoke wheels with 22.5 x 8.25 rims, 3 axles, 5 spoke	**175.00**	45
Cast spoke wheels with 22.5 x 8.25 rims, 4 axles, 5 spoke	**265.00**	60
22.5 x 8.25 Aluminum wheels, outside polished, inside machine finished, outboard mount, hub piloted, 3 axles	**3,750.00**	(330)
22.5 x 8.25 Aluminum wheels, outside polished, inside machine finished, outboard mount, hub piloted, 4 axles	**5,000.00**	(440)
DURA BRITE aluminum wheels (per wheel) with aluminum wheel option	**200.00**	(28)
PRO STEEL wheels (in lieu of std steel)- (per wheel)	**110.00**	-
Electrical		
Additional side clearance lights (per pair)	**110.00**	5
Additional mid turn signals (per pair)	**95.00**	10
3rd Tail light package (red/tail light circuit)	**95.00**	10
Strobe lights for rear - (yellow / built into rear light bar)	**275.00**	10
Strobe lights for rear - (2 yellow lights magnetically attached)	**460.00**	10
Flasher kit for rear lights including wet cell battery, recharging feature)	**385.00**	50
New York amber lights (3rd amber tail light)	**140.00**	15
LED (Light Emitting Diodes) lights	Std	0
Light bar (2-clear work lights, 2- red tailights) in back of gooseneck	**550.00**	
Paint		
Black finish	Std.	Std.
Yellow finish	N/C	0
Red finish	N/C	0
Paint, other than standard color enamel, color matched (does not include polyurethene, metallics and Imron finishes)	**990.00**	0

E. D. ETNYRE & CO., Oregon, Illinois 61061-9778
1333 South Daysville Road • Phone: 800/995-2116 or 815/732-2116 • Fax: 815/732-7400

Price Sheet No. C-6000-12R1 Effective January 15, 2012
Supersedes C-6000-12R

All prices exclusive of Federal Excise Tax, FOB Destination and subject to any other applicable taxes. All weights subject to a plus or minus of 5%.

PRODUCTION PRTN SERIES
6000P "BLACKHAWK"
HYDRAULIC REMOVABLE GOOSENECK
FRONT AND REAR LOADING TRAILERS
60 Ton
(in any 12'-0" of deck)
Options on this model limited to only those shown below.

STANDARD FEATURES AND EQUIPMENT

Load capacity - 60 tons in any 12'-0" of deck in 3+1 (14'-1" spread) axle configuration
Hydraulic Removable Gooseneck
High lift gooseneck (42" travel)
Hydraulically operated by PTO/wet line
Pin and stirrup design
Pin setting - 16"
Swing clearance - 108"
Fifth wheel height - 50" loaded (adjustable 4 position - no blocks)
Gooseneck support arm
Vertical gooseneck locking pin (air operated)
Frame reinforced-For 3+1 (14'-1" spacing) or close coupled 4th axle.
Main frame - 4 beam - 16" fully cambered
Top flange reinforcement (full length ... outside flanges only)
Deck height - 22" (adjustable - no blocks)
Ground clearance - 6" (adjustable - no blocks)
Deck width - 8'-6" (102")
Crossmember spacing - 20"
Decking - 2" Apitong (open center)
Decking securement - deck screws
Front folding ramps - steel w/traction bars
Outriggers - 12" swinging/removable w/double hook-on at front
Bucket trough at rear of deck (covered with steel plate)
Half front bolsters with traction bars
Load bearing bolsters between axles (drop style)
Load bearing half bolsters at rear (drop style)
Extra low 1st crossmember in rear bridge
Boom well (full length including rear half bolster)
Chain slots and flag holders in bolsters
Ridewell air suspension
±3" Adjustable ride height
Manual exhaust valve
Tires - (16) 275/70R 22.5 (H) 16 PR tubeless radials
Wheels - 8.25 x 22.5 steel disc (white)
Hubs - Hub piloted with outboard drums
Axles - 25,000# (3/4" wall thickness) with oil bearings
4th axle - flip/removable type
Axle spacing - 55"
Over-ride chains on all axles
Anti-lock brakes - none (trailer exceeds 120,000# GVWR)
Brakes - 16 1/2" x 7" full air
Spring Brakes - one (1) axle (center axle)
Automatic slack adjusters
Lighting - L.E.D. type - rubber mounted - mid turn signal
Finish - shot blast / epoxy primer / urethane finish
Air lines - glad hands
Electrical - 7 way receptacle
Lash rings - 12 total (6 each side) bent style
Mud Flaps
Red and white conspicuity markings

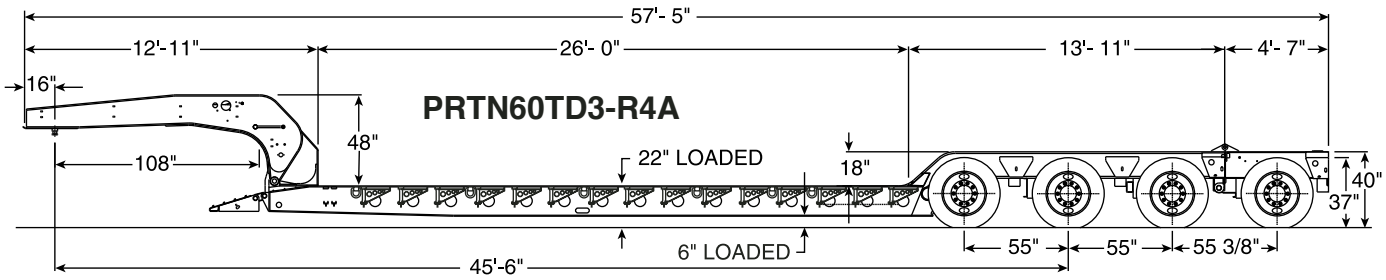

Model	Capacity	Deck	Axles	Tire Size	List Price	Wt. (Lbs.)
PRTN60TD3-R4A	60	26' Level	4	275/70R22.5 (H)	**$101,750.00**	27,050#

OPTIONAL FEATURES AND EQUIPMENT

Options on this model limited to only those shown below.

	PRTN60TD3-R4A Price	Wt. (Lbs)
Gooseneck		
50" Loaded 5th wheel height (adjustable ±2")	Std.	Std.
13'-0" Gooseneck (108" swing clearance)	Std.	Std.
14'-0" Gooseneck (120" swing clearance)	**$1,350.00**	500
14'-0" Gooseneck (with removable kingpin at 120" and 108" swing clearance)	**1,695.00**	660
10 Gauge gooseneck fenders (8'-0" wide/bolt-on) includes clearance lights	**1,360.00**	410
Gooseneck support arm	Std.	Std.
Wet line/P.T.O. set-up	Std.	Std.
Piped for power package & wet line operation	**495.00**	160
13 H.P. Honda engine power package mounted in gooseneck base including half cover and controls remoted to side of gooseneck.	**3,420.00**	470
1/8" aluminium floor plate for top of gooseneck (bolt-on)	Std.	Std.
Hinged and lockable cover for rear of gooseneck(bolt-on)	**210.00**	70
Chain and binder rack in back of gooseneck (not available with power package)	**175.00**	75
Air actuated gooseneck to deck locking pin (vertical).	Std.	Std.
Jumper hoses (gooseneck to tractor) (12' long other lengths available by request)	**495.00**	
Platform (Deck)		
Frame reinforcing for future 4th axle	Std.	Std.
Concentrated load in 16'-0"	Std.	Std.
Four (4) beam drop deck design	Std.	Std.
20" Crossmember spacing	Std.	Std.
26'-0" deck length	Std.	Std.
8'-6" (102") Deck width	Std.	Std.
12" Swinging/removable outriggers without planks	Std.	Std.
12" Double hook-on outriggers at front of deck	Std.	Std.
2" Apitong flooring (full 2" thick/outside of mainbeams only)	Std.	Std.
2" Apitong flooring (between mainbeams)	**800.00**	800
2" Oak flooring (outside of mainbeams.) (Oak flooring is not warranted.)	**(400.00)**	(130)
Flooring secured with self tapping screws	Std.	Std.
Flooring secured with carriage bolts & floor clips	**360.00**	60
Omit outriggers	**(875.00)**	(250)
Outrigger plank spring hold-downs (no planks)	**130.00**	20
10" Outrigger planks (2" x 10" Oak) with spring loaded hold downs	**530.00**	550
10" Outrigger planks (2" x 10" Apitong) with spring loaded hold downs	**925.00**	600
Slope front of deck top down (with traction bars)	Std.	Std.
Twelve (12) Lash rings (bent style).	Std.	Std.
Expanded metal between mainbeams (per section)	**120.00**	20
Reinforced top flange/side members	Std.	Std.
Front folding ramps (steel with traction bars)	Std.	Std.
Front folding ramps (wood filled ... must be specified)	**N/C**	N/C
Bucket trough in rear of deck (rear three crossmembers covered with 3/8" steel plate.	Std.	Std.
Rear Section and Suspension		
Front transition ramp (41° slope/angle)	Std.	Std.
Ridewell air suspension (55" axle spacing) Includes Etnyre manual raising and lowering of air suspension (short moves only, manual pin relocation required)	Std.	Std.
Anti-lock brakes (None) Exceeds 120,000# GVWR.	None	None
Anti-lock brakes (2S/2M system)	**710.00**	50
Spring brakes - one axle standard, per additional axle.	**235.00**	30
Manual exhaust valve (on air suspension)	Std.	Std.
Over-ride chains on all axles	Std.	Std.
25,000# Capacity axles (3/4" wall).	Std.	Std.
Air lift (requires adjustment of leveling valve, 3rd axle only)	**1,100.00**	300
55" Axle spacing	Std.	Std.
Disc wheels, 10 stud, 22.5 x 8.25	Std.	Std.
Oil wheel seals	Std.	Std.

OPTIONAL FEATURES AND EQUIPMENT

Options on this model limited to only those shown below.

	PRTN60TD3-R4A Price	Wt. (Lbs)
Rear Section and Suspension (continued)		
275/70R22.5(H) tires	Std.	Std.
Alternate brands of tires	**consult factory**	
22.5 x 8.25 Aluminum wheels, outside polished, inside machine finished, outboard mount, hub piloted, 4 axles	**5,000.00**	(440)
DURA BRITE aluminum wheels (per wheel) with aluminum wheel option	**200.00**	(28)
PRO STEEL wheels (in lieu of std steel)- (per wheel)	**110.00**	**-**
Spare tire and wheel (standard tire)	**900.00**	230
Boom well (full length of rear section, open bottom)	Std.	Std.
Boomwell cover plate (bolt-in 2-piece)	**385.00**	50
Load bearing bolsters between tires (drop style)	Std.	Std.
Load bearing bolsters rear of 3rd axle (drop style)	Std.	Std.
Flag holder slots in ends of bolsters and half bolster	Std.	Std.
Chain hook slots on bottom of bolsters	Std.	Std.
Wheel well covers (over tires only/ bolt-on/ 3 axles/ 1/4" floor plate)*	**2,975.00**	1,280
Wheel well covers (over tires only/bolt-on) 3 axles 1/2" floor plate. For use with scrapers.	**4,000.00**	2,000
Automatic slack adjusters	Std.	Std.
Hubometer	**105.00**	10
4th Axle flip up and removable with Ridewell air suspension, standard axles and tires, 8'-6" wide (shimmable flip and removable)	Std.	Std.
Miscellaneous		
Black finish	Std.	Std.
Red finish	N/C	0
Yellow finish	N/C	0
Additional side clearance lights (1 pair only)	**110.00**	5
Additional lash rings, each	**45.00**	5
LED (Light Emitting Diodes) lights	Std.	0

* Increases height by 4" (wheel covers raised 4" above tires).

E. D. ETNYRE & CO., Oregon, Illinois 61061-9778
1333 South Daysville Road • Phone 800/995-2116 or815/732-2116 • Fax: 815/732-7400

Price Sheet No. C-RTN60-12R1 Effective January 15, 2012
Supersedes C-RTN60-12R

All prices exclusive of Federal Excise Tax, FOB Destination and subject to any other applicable taxes. All weights subject to a plus or minus of 5%.

CUSTOM RTN SERIES
HYDRAULIC REMOVABLE GOOSENECK
FRONT AND REAR LOADING TRAILERS
60 Ton
(in any 12'-0" of deck)

STANDARD FEATURES AND EQUIPMENT

Load capacity - 60 tons in any 12'-0" of deck in 3+1 (14'-1" spread) axle configuration
Hydraulic Removable Gooseneck
High lift gooseneck (42" travel)
Hydraulically operated by PTO/wet line
Pin and stirrup design
Pin setting - 16"
Swing clearance - 108"
Fifth wheel height - 50" loaded (adjustable 4 position - no blocks)
Gooseneck support arm
Vertical gooseneck locking pin (air operated)
Frame reinforced-For 3+1 (14'-1" spacing) or close coupled 4th axle.
Main frame - 4 beam - 16" fully cambered
Top flange reinforcement (full length ... outside flanges only)
Deck height - 22" (adjustable - no blocks)
Ground clearance - 6" (adjustable - no blocks)
Deck width - 8'-6" (102")
Crossmember spacing - 20"
Decking - 2" Apitong (open center)
Decking securement - deck screws
Front folding ramps - steel w/traction bars
Outriggers - 12" swinging/removable w/double hook-on at front
Bucket trough at rear of deck (covered with steel plate)
Extra low 1st crossmember in rear bridge
Half front bolsters with traction bars
Load bearing bolsters between axles (drop style)
Load bearing half bolsters at rear (drop style)
Boom well (full length including rear half bolster)
Chain slots and flag holders in bolsters
Ridewell air suspension
±3" Adjustable ride height
Manual exhaust valve
Tires - (16) 275/70R 22.5 (H) 16 PR tubeless radials
Wheels - 8.25 x 22.5 steel disc (white)
Hubs - Hub piloted with outboard drums
Axles - 25,000# (3/4" wall thickness) with oil bearings
4th axle - flip/removable type
Axle spacing - 55"
Over-ride chains on all axles
Anti-lock brakes - none (trailer exceeds 120,000# GVWR)
Brakes - 16 1/2" x 7" full air
Spring Brakes - one (1) axle (center axle)
Automatic slack adjusters
Lighting - L.E.D. type - rubber mounted - mid turn signal
Finish - shot blast / epoxy primer / urethane finish
Air lines - glad hands
Electrical - 7 way receptacle
Lash rings - 12 total (6 each side) bent style
Mud Flaps
Red and white conspicuity markings

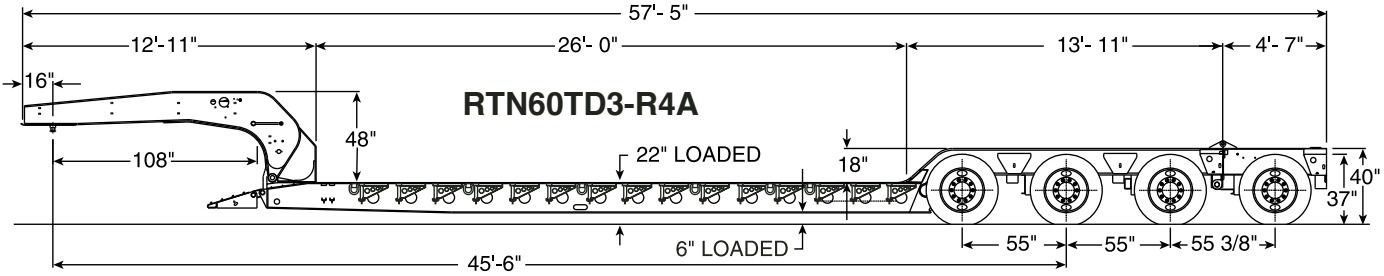

Model	Capacity	Deck	Axles	Tire Size	Price	Wt. (Lbs.)
RTN60TD3-R4A	60	26' level	4	275/70R 22.5 (H)	**$110,200.00**	27,900#

OPTIONAL FEATURES AND EQUIPMENT

	RTN60TD3-R4 Price	Wt. (Lbs.)
Gooseneck		
12'-0" Gooseneck (96" swing clearance . . reduces OAL by 1'-0")	0	120
13'-0" Gooseneck (108" swing clearance)	Std.	Std.
13'-0" Gooseneck (with removable kingpin at 108" and 84" swing clearance)	**$330.00**	160
13'-6" Gooseneck (114" swing clearance . . adds to OAL))	**1,090.00**	120
14'-0" Gooseneck (120" swing clearance . . adds to OAL))	**1,330.00**	290
18'-6" Gooseneck (174" swing clearance . . adds to OAL) Includes 60" flip extension	**10,500.00**	3,090
Additional kingpin setting, each	**495.00**	160
Optional fifth wheel heights	Consult Factory	
13 HP Honda engine package self contained	**3,420.00**	520
18 HP Engine package self contained	**4,100.00**	585
Dual hydraulic operational system	**495.00**	160
Hinged and lockable cover for rear of gooseneck.	**210.00**	70
Fenders for 12'-6" gooseneck (8' wide/bolt-on) includes clearance lights	**1,360.00**	430
Chain and binder rack in back of gooseneck (not available with power package)	**175.00**	75
Spare tire carrier (on top of gooseneck)	**220.00**	25
1/8" aluminium floor plate cover (on top of gooseneck/bolt-on)	Std.	Std.
Tool box with lid (over kingpin area)	**235.00**	90
Air actuated gooseneck to deck locking pin (vertical)	Std.	Std.
Jumper hoses (gooseneck to tractor) (12' long other lengths available by request)	**495.00**	
8' Gooseneck extension	**6,500.00**	1,500
Base Plate in rear of gooseneck	**120.00**	20
Platform (Deck)		
Additional length		
2'-0" (28'-0" deck length . . . adds 2'-0" to OAL)	**1,575.00**	540
4'-0" (30'-0" deck length . . . adds 4'-0" to OAL)	**3,150.00**	1,080
8'-0" (96") deck width	**N/C**	(520)
8'-6" (102") deck width	Std.	Std.
9'-0" (108") deck width	**2,200.00**	620
10'-0" (120") deck width	**3,375.00**	1,390
Drop side deck (16-3/4" side height)	**3,575.00**	1,700
Drop side deck (14-1/4" side height/1/4" floor plate)	**7,150.00**	3,400
Beam deck (in lieu of standard deck) (detacable rear section recommended)	**(4,500.00)**	(2,050)
10' Beam deck extension (requires detachable rear section)	**16,860.00**	4,000
10' Standard deck extension (requires detachable rear section)	**23,675.00**	5,125
24' beam deck (to be used in lieu of standard deck). Requires detachable rear section.	**23,675.00**	7,100
3 to 1 slope at rear of deck (increases length)	**1,750.00**	775
4 to 1 slope at rear of deck (increase length)	**1,995.00**	895
Top flange reinforcement (full length . . . outside flanges only)	Std.	Std.
2" Apitong flooring (full 2" thick . . . in lieu of standard)	Std.	Std.
Center filled wood deck (2" Apitong)	**800.00**	800
Decking secured with carriage bolts and clips (in lieu of screws)	**595.00**	75
Outrigger planks - Oak 2" x 10" with spring loaded hold downs	**530.00**	460
Outrigger planks - Apitong 2" x 10" with spring loaded hold downs	**925.00**	500
Omit standard 12" outriggers	**(875.00)**	(230)
Double hook on outriggers, per pair	**275.00**	40
Front folding ramps (steel with traction bars)	Std.	Std.
Front folding ramps (wood filled ... must be specified)	**N/C**	N/C
Front folding wood double fold ramps for pavers, 60" long	**1,475.00**	600
Center hook on ramp - 31" long/wood filled/aluminium	**1,025.00**	170
Auxiliary crossmembers (outside of mainbeams between crossmembers)	**1,500.00**	390
Auxiliary crossmembers (full width between crossmembers)	**2,100.00**	570
Bucket trough in rear of deck (rear 3 crossmembers recessed. Covered with 3/8"		

Platform Deck - Cont'd	RTN60TD3-R4A Price	Wt. (Lbs.)
steel plate.)	Std.	Std.
Expanded metal between mainbeams, per section	**120.00**	20
Storage area between mainbeams (steel plate with drain holes, per section)	**145.00**	30
Hinged/lockable cover for storage areas, each	**155.00**	40
Additional lash rings, each (bent style)	**45.00**	5
Recessed lash rings (in deck), each	**90.00**	10
Stake pockets	Consult Factory	

Frame Reinforcement

Frame reinforcement for flip axle O O O^O	Std.	Std.
Trailer capacity concentrated in 12'	Std.	Std.
Frame reinforcement for single axle booster OOO--O	Std.	Std.
Frame reinforcement for tandem axle booster OO--OO	**2,425.00**	700
Frame reinforcement for tandem axle booster OOO--OO	**3,750.00**	800
Maximum number of axles in any configuration	5	
Axle extension (stinger bar) for 14'-1" spread (OO-O or OOO-O)	**11,835.00**	1,700
Axle extension (stinger bar) for 14'-1" spread (OO-OO or OOO-OO)	**12,450.00**	2,200
Axle extension (stinger bar) for 16'-1" spread (OO-OO or OOO-OO)	**14,100.00**	3,900
Crank type support jack for stinger bar	**440.00**	120.00
Delete stinger reinforcement	**(250.00)**	(360)

Rear frame (rear section) heights increase when axle extension (stinger bars) feature is incorporated. Consult factory for actual dimensions. Detachable rear is recommended when axle extension (stinger bar) is utilized.

Wheel Area (Rear Section)

Detachable rear section recommended with axle extensions (stinger bars)	**5,225.00**	690
Half front bolsters (transition ramp)	Std.	Std.
Wheel well covers, bolt-on, over tires only/ 3 axles/ 1/4" floor plate.	**2,975.00**	1,280
Wheel well covers, bolt-on, over tires only/ 3 axles/ 1/2" floor plate. For use with scrapers.	**4,000.00**	2,000
Steel covered (1/4" floor plate) full width rear deck (includes front transition ramp. Deletes boom well. Increases rear section height by 4 1/2".	**3,850.00**	1,500
Wood filled full width rear deck (includes front transition ramp, deletes boomwell, increases rear section height by 6")	**4,000.00**	1,900
Center filled rear section with wood between mainbeams (deletes boom well)	**575.00**	350
1/4" Floor plate between center beams (bolt-in)	Std.	Std.
Omit bolsters (front half bolster, bolsters between wheels and rear half bolster); light bar only at rear	**(710.00)**	(690)
Boom well (between axles and thru rear half bolster)	Std.	Std.
Boomwell cover (bolt-in 2-piece)	**385.00**	50
55" Axle spacing (air suspension)	Std.	Std.
60 1/2" Axle spacing (air suspension)	**880.00**	550
Wide load sign (removable)	**325.00**	120

Suspensions

Ridewell air suspension includes:		
Etnyre manual raising and lowering of air suspension (short moves only, manual pin relocation required . . . ±3")	Std.	Std.
Hendrickson/Turner air suspension	**525.00**	220
Neway air suspension	**1,850.00**	260
Manual exhaust valve	Std.	Std.
Air raise and lower valve (hand control valve/recommended on 4th axle).	**300.00**	10
Air lift rear axle (3rd axle only)	**1,100.00**	300
Scale-O-Matic (with one access station plumbed to drivers side of trailer at rear of deck)	**350.00**	30
30,000# Ridewell suspension (per axle)	**330.00**	10

OPTIONAL FEATURES AND EQUIPMENT

	RTN60TD3-R4A Price	Wt. (Lbs.)
Axles and Brakes		
Anti-lock brakes (2S/2M system)	**710.00**	50
Flip axle with air suspension, standard tires, axles and all connections (must add needed frame reinforcement). (Adds to overall length.)		
96" width	**13,250.00**	2,815
102" width	**13,300.00**	3,020
108" width	**13,525.00**	3,150
114" width	**13,900.00**	3,270
120" width	**14,150.00**	3,395
Deduct to make flip axle fixed	**(1,060.00)**	(500)
Half bolster on rear of flip axle	Std.	Std.
3rd Flip axle in lieu of 3rd fixed (includes half bolster rear of 2nd and 3rd axle - trailer must be on air)	**1,650.00**	290
Spring brakes, per axle (one axle standard)	**235.00**	30
Dust shields (3 axles)	**210.00**	60
Hubometer	**105.00**	10
25,000# Capacity axles (3/4" wall) per axle	Std.	Std.
Over-ride chains on all axles.	Std.	Std.
30,000# capacity axles (per axle)	**1,000.00**	35
Tires and Wheels		
275/70R22.5 (H) radial tires. (3 axles)	Std.	Std.
11R 22.5 (H) PR radials tubeless tires	**(0)**	(640)
11R24.5 (H) radial tires. (3 axles)	**275.00**	780
22.5 x 8.25 steel disc wheels (hub piloted)	Std.	Std.
Cast spoke wheels with 22.5 x 8.25 rims, 4 axles, 5 spoke	**350.00**	60
22.5 x 8.25 Aluminum wheels, outside polished, inside machine finished, outboard mount, hub piloted, 4 axles	**5,000.00**	(440)
DURA BRITE aluminum wheels (per wheel) with aluminum wheel option	**200.00**	(28)
PRO STEEL wheels (in lieu of std steel)- (per wheel)	**110.00**	**-**
Electrical		
Additional side clearance lights (per pair)	**110.00**	5
Additional mid turn signals (per pair)	**95.00**	10
3rd Tail light package	**95.00**	10
Strobe lights for rear - (yellow / built into rear light bar)	**275.00**	10
Strobe lights for rear - (2 yellow lights magnetically attached)	**460.00**	10
Flasher kit for rear lights including wet cell battery, recharging feature)	**385.00**	50
New York amber lights (3rd amber tail light)	**140.00**	15
LED (Light Emitting Diodes) lights	Std.	0
Light bar (2-clear work lights, 2- red tailights) in back of gooseneck	**550.00**	
Paint		
Black finish	Std.	Std.
Yellow finish	N/C	0
Red finish	N/C	0
Paint, other than standard enamel, color matched (Does not include polyurethene, metallics and Imron finishes)	**990.00**	0

E. D. ETNYRE & CO., Oregon, Illinois 61061-9778
1333 South Daysville Road • Phone 800/995-2116 or 815/732-2116 • Fax: 815/732-7400

Price Sheet No. C-RPS-12R1 Effective January 15, 2012
Supersedes C-RPS-12R

All prices exclusive of Federal Excise Tax, FOB Destination and subject to any other applicable taxes. All weights subject to a plus or minus of 5%.

PS SERIES
PAVER SPECIAL
FIXED GOOSENECK
TANDEM AXLE TRAILERS
25 AND 35 Ton
(in any 16'-0" of deck)

STANDARD FEATURES AND EQUIPMENT

48'-0" Overall length
Fixed (rigid) gooseneck
Full width gooseneck
Pin setting - 16"
Swing clearance - 80"
3:1 Gooseneck slope (18°)
Level platform (deck)
Fifth wheel height - 50" loaded
Telescopic drop legs
Concentrated load in 16'-0"
Main frame - Two (2) beam design
100,000 P.S.I. steel mainbeams
One (1) piece crossmembers on 24" centers
Deck height - 33" loaded
Deck width - 8'-6" (102")
Decking - 1 1/2" Apitong, full width
Deck securement - deck screws
Hydraulic bi-fold ramps (8'-0" x 36")
12 Volt electric-hydraulic power package
Covered wheel wells - 1/4" steel floor plate
4'-4" (52") sloping afterdeck/wood covered
Air ride suspension
Manual air exhaust
Tires - 215/75R 17.5 (H) 16 PR tubeless radials
Hubs - hub piloted
Wheels - 6.75 x 17.5 steel disc (white)
Brakes - 12 1/4" x 7 1/2" full air
Spring brakes - one (1) axle (rear axle)
Anti-Lock brakes (2S/2M System)
Automatic slack adjusters
Axles - 22,500 pounds with oil bearings
Lighting - L.E.D. type - rubber mounted - mid turn signal
Finish - shot blast / epoxy primer / urethane finish
Air lines - glad hands
Electrical - 7 way receptacle
Lashing rings - 14 (7 each side/bent style)
Mud flaps
Red and white conspicuity markings

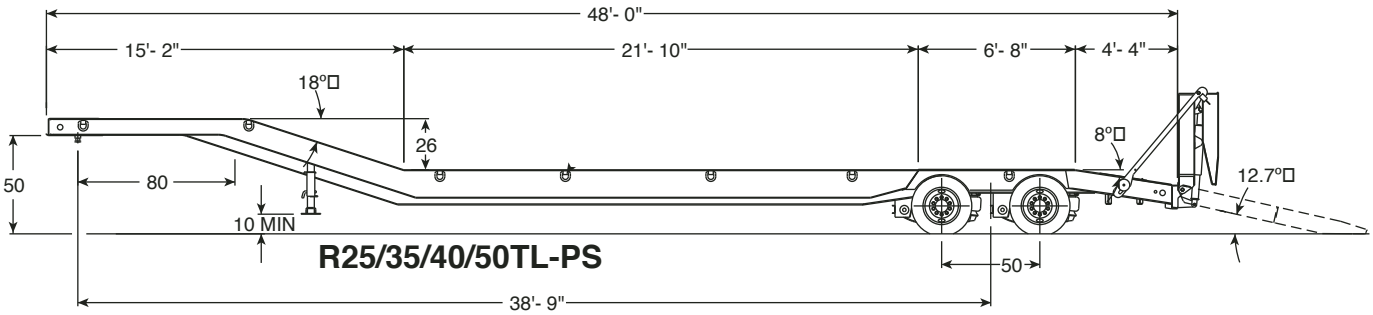

Model	Capacity	Length	Axles	Tire Size	List Price	Wt. (Lbs.)
R25TL-PS	25	48' - 0" OAL	2	215/75R 17.5 (H)	**$64,000.00**	15,900#
R35TL-PS	35	48' - 0" OAL	2	215/75R 17.5 (H)	**$67,375.00**	16,500#
R40TL3-PS*	40	48' - 0" OAL	3	215/75R 17.5(H)	**$80,250.00**	18,000#
R50TL3-PS*	50	48' - 0" OAL	3	235/75R 17.5(H)	**$83,425.00**	19,500#

*Contact factory for detailed specifications

OPTIONAL FEATURES AND EQUIPMENT

	Price	Wt. (Lbs.)
Gooseneck		
Extra length		
96" Clearance radius	**$770.00**	300
108" Clearance radius	**1,320.00**	600
120" Clearance radius	**1,870.00**	900
Additional king pin settings, each	**400.00**	160
Alternate fifth wheel heights (50" standard)		
48"	**130.00**	(60)
52"	**200.00**	60
54"	**250.00**	110
Telescopic drop legs	Std.	Std.
2 Speed landing gear	**550.00**	130
Tool box with lid (over kingpin area)	**250.00**	90
Spare tire carrier	**200.00**	25
Platform (Deck)		
8'-6" (102") deck width	Std.	Std.
9'-0" (108") deck width	**1,550.00**	640
9'-6" (114") deck width	**2,860.00**	1,380
10'-0" (120") deck width	**4,200.00**	2,020
Extra deck length		
2'-0" (50'-0" OAL)	**1,325.00**	500
4'-0" (52'-0" OAL)	**2,650.00**	1,000
6'-0" (54'-0" OAL)	**3,975.00**	1,500
Apitong flooring	**Std.**	Std.
50,000 P.S.I. Steel mainbeams (in lieu of 100,000 P.S.I.)	N/C	1000
Additional lashing rings, each	**45.00**	5
Recessed lash rings (in deck), each	**90.00**	10
Stake pockets	Consult Factory	
Wheel Well Area (Rear Section)		
Load ramps operated from truck wet line/PTO in lieu of electric power pack	**(600.00)**	(100)
8' x 36" Bi-fold ramps (11.5º load angle)	Std.	Std.
12' x 36" Bi-fold ramps (7.7º load angle)	**1,875.00**	250
Suspension		
Air ride suspension (50" axle spacing)	Std.	Std.
Air exhaust valve	Std.	Std.
Multi-leaf spring suspension (ILO Air Ride)	**(2,750.00)**	(250.00)
Axles and Brakes		
Spring brakes - one (1) axle standard, per additional axle	**235.00**	30
FMVSS 121 brake system	**800.00**	150
Hubometer	**90.00**	10
Anti-Lock brakes (2S/2M System)	Std.	Std.
22,500# Capacity axles (5/8" wall)	Std.	Std.
25,000# Capacity axles (3/4" wall) (per axle)	**235.00**	35
Tires and Wheels		
215/75R 17.5 (H) 16 PR tubeless radial tires	Std.	Std.
235/75R17.5 (H) tires (per axle)	**250.00**	30
255/70R22.5 (H) tires (requires 121 brake system) 38" deck height	**990.00**	270
6.75 x 17.5 Steel disc wheels	Std.	Std.

OPTIONAL FEATURES AND EQUIPMENT

	R25TLPS		R35TLPS	
	Price	**Wt. (Lbs.)**	**Price**	**Wt. (Lbs.)**
Electrical				
Additional side clearance lights (per pair)	**110.00**	5		
Additional mid turn signals (per pair)	**95.00**	10		
3rd Tail light package	**95.00**	10		
LED (Light Emitting Diodes) lights	Std.	0		
Paint				
Black finish	Std.	Std.		
Yellow finish	N/C	0		
Red finish	N/C	0		
Paint, other than standard color enamel, color matched (Does not include polyurethene, metallics and Imron finishes)	**99z0.00**	0		

E. D. ETNYRE & CO., Oregon, Illinois 61061-9778
1333 South Daysville Road • Phone 800/995-2116 or 815/732-2116 • Fax: 815/732-7400

Price Sheet No. C-RTL-12R1 Effective January 15, 2012
Supersedes C-RTL-12R

All prices exclusive of Federal Excise Tax, FOB Destination and subject to any other applicable taxes. All weights subject to a plus or minus of 5%.

R SERIES
REAR LOADING TRAILERS
TANDEM AXLE/LEVEL PLATFORM
25 AND 35 Ton
(in any 16'-0" of deck)

STANDARD FEATURES AND EQUIPMENT

Fixed (rigid) gooseneck
Narrow gooseneck
Pin setting - 16"
Fifth wheel height - 50" loaded
Swing clearance - 84"
Telescopic drop legs
Concentrated load in 16'
Main frame - Four beam type
One piece crossmembers on 24" centers
Deck height - 32" loaded
Deck width - 8'-6" (102")
Deck length - 23'-0"
Decking - 1 1/2" Apitong, full width
Deck securement - deck screws
Load bearing bolsters between axles
Rear loading ledges
30" Beavertail steel with traction aids

Multi-leaf spring suspension with adjustable torque rods
Tires - 215/75R 17.5 (H) 16 PR tubeless radials
Hubs - hub piloted
Wheels - 6.75 x 17.5 steel disc (white)
Brakes - 12 1/4" x 7 1/2" full air
Spring brakes - one (1) axle (rear axle)
Anti-Lock brakes (2S/2M)
Automatic slack adjusters
Axles - 22,500 pounds with oil bearings
Lighting - L.E.D. type - rubber mounted - mid turn signal
Finish - shot blast / epoxy primer / urethane finish
Air lines - glad hands
Electrical - 7 way receptacle
Lashing rings -
25 ton - 6 (3 each side / bent style)
35 ton - 8 (4 each side / bent style)
Mud flaps
Red and white conspicuity markings

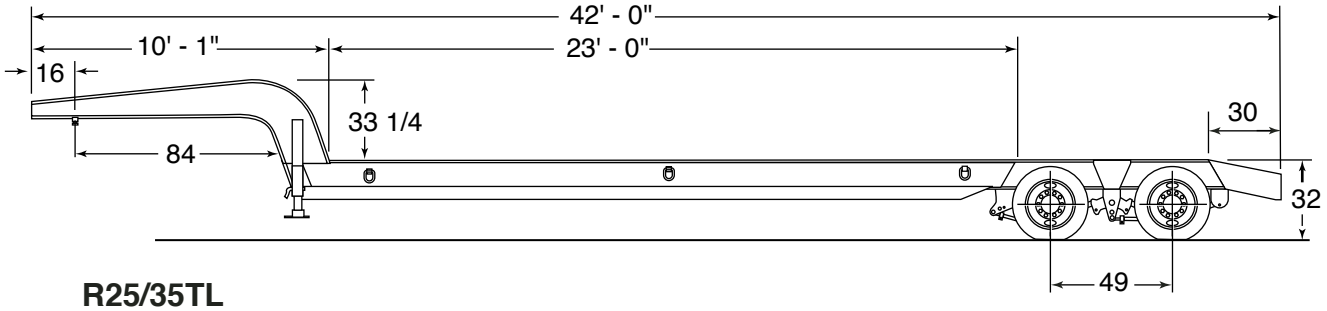

R25/35TL

Model	Capacity	Deck	Axles	Tire Size	List Price	Wt. (Lbs.)
R25TL	25	23' level	2	215/75R 17.5 (H)	**$37,975.00**	11,240#
R35TL	35	23' level	2	215/75R 17.5 (H)	**$45,250.00**	11,550#

OPTIONAL FEATURES AND EQUIPMENT

	R25TL Price	R25TL Wt. (Lbs.)	R35TL Price	R35TL Wt. (Lbs.)
Gooseneck				
Extra length				
96" Clearance radius	**$500.00**	190	**$530.00**	210
108" Clearance radius	**1,000.00**	380	**1,050.00**	420
120" Clearance radius	**1,500.00**	570	**1,585.00**	630
Additional king pin settings, each	**400.00**	160	**400.00**	160
Full width gooseneck (Apitong flooring) Includes vertical drop with splash plates	**2,100.00**	800	**2,100.00**	800
Gooseneck fenders (8'-6" wide/non load bearing)	**1,000.00**	370	**1,000.00**	370
Motor grader ramps	**1,700.00**	820	**1,700.00**	820
Telescopic drop legs	Std.	Std.	Std.	Std.
2 Speed landing gear	**550.00**	130	**550.00**	130
Tool box with lid (over king pin area)	**250.00**	90	**250.00**	90
Spare tire carrier (over king pin area/not available with tool box)	**200.00**	25	**200.00**	25
Platform (Deck)				
8'-6" (102") deck width	Std.	Std.	Std.	Std.
9'-0" (108") deck width	**880.00**	400	**950.00**	440
10'-0" (120") deck width	**1,775.00**	800	**1,875.00**	880
Extra deck length				
2'-0" (25'-0" deck/44'-0" OAL)	**540.00**	380	**600.00**	410
4'-0" (27'-0" deck/46'-0" OAL)	**1,075.00**	760	**1,200.00**	820
6'-0" (29'-0" deck/48'-0" OAL)	**1,615.00**	1,140	**1,800.00**	1,230
Apitong flooring	**Std.**	250	**Std.**	250
Double drop deck (24" loaded deck height) (includes front half bolster/increases length)	**1,750.00**	760	**1,750.00**	760
Outriggers (swing out brackets) set for 2" planks				
Platform length - 23'-0" (42'-0" OAL)	**1,885.00**	260	**1,885.00**	260
Platform length - 25'-0" (44'-0" OAL)	**1,985.00**	280	**1,985.00**	280
Platform length - 27'-0" (46'-0" OAL)	**2,085.00**	300	**2,085.00**	300
Platform length - 29'-0" (48'-0" OAL)	**2,185.00**	320	**2,185.00**	320
Additional lashing rings, each (bent style)	**45.00**	5	**45.00**	5
Recessed lash rings (in deck), each	**90.00**	10	**90.00**	10
Stake pockets (standard configuration), each	**90.00**	10	**90.00**	10
Wheel Well Area (Rear Section)				
Wheel well covers, per axle (over tires only/raises height 4")	**1,400.00**	300	**1,400.00**	300
48" Rear sloping afterdeck (beavertail), in lieu of std. 30"	**530.00**	250	**530.00**	300
Wood filled beavertail (Oak or Apitong to match deck)	**250.00**	50	**250.00**	50
Omit beavertail.	**(1,070.00)**	(750)	**(1,070.00)**	(750)
*Rear folding ramps (19" wide x 54" long), includes spring assist	**1,200.00**	735	**1,200.00**	735
*8' x 36" Wide Bi-fold hydraulic ramps with electric-hydraulic power (requires 12 v. jumper from tractor)	**5,150.00**	2,060	**5,150.00**	2,060
*12' x 36" Wide bi-fold hydraulic ramps with electric-hydraulic power (requires 12 v. jumper from tractor)	**6,725.00**	2,480	**6,725.00**	2,480
Outriggers (swing out brackets) removable type (for rear section)				
Tandem axle, level deck (single drop)	**530.00**	100	**530.00**	100
Tandem axle, drop deck (double drop)	**785.00**	150	**785.00**	100
Suspension				
Single point spring suspension	**1,500.00**	180	**1,500.00**	180
Air ride suspension (54" axle spacing) includes	**3,830.00**	250	**3,830.00**	250
Etnyre manual raising and lowering of air suspension (short ..... moves only, manual pin relocation required)				
Air exhaust valve	**300.00**	10	**300.00**	10

C-RTL

OPTIONAL FEATURES AND EQUIPMENT

	R25TL		R35TL	
	Price	**Wt. (Lbs.)**	**Price**	**Wt. (Lbs.)**
Axles and Brakes				
Spring brakes (one axle standard), per axle	**235.00**	30	**235.00**	30
FMVSS 121 brake system	**800.00**	150	**800.00**	150
Hubometer	**105.00**	10	**105.00**	10
Anti-Lock brakes (2S/2M System)	Std.	Std.	Std.	Std.
22,500# Capacity axles (5/8" wall)	Std.	Std.	Std.	Std.
25,000# Capacity axles (3/4" wall) Per Axle	**235.00**	35	**235.00**	35
Tires and Wheels				
215/75 R. 17.5 (H) 16 PR radials	Std.	Std.	Std.	Std.
235/75R17.5 (G) tires	**500.00**	60	**500.00**	60
255/70R22.5 (H) tires (increases loaded deck height to 36"). Spring brakes may be required. Contact factory.	**990.00**	400	**990.00**	400
6.75 x 17.5 Steel disc wheels (with 215/75R 17.5 tires)	Std.	Std.	Std.	Std.
Electrical				
Additional side clearance lights (per pair)	**110.00**	5	**110.00**	5
Additional mid turn signals (per pair)	**95.00**	10	**95.00**	10
3rd Tail light package	**95.00**	10	**95.00**	10
LED (Light Emitting Diodes) lights	Std.	0	Std.	0
Paint				
Black finish	Std.	Std.	Std.	Std.
Yellow finish	N/C	0	N/C	0
Red finish	N/C	0	N/C	0
Paint, other than standard color enamel, color matched (Does not include polyurethene, metallics and Imron finishes)	**990.00**	0	**990.00**	0

* Ramp prices cover new ramps supplied with trailer. If ordered at a later date, please contact our Parts Department for quote.

E. D. ETNYRE & CO., Oregon, Illinois 61061-9778
1333 South Daysville Road • Phone 800/995-2116 or 815/732-2116 • Fax: 815/732-7400

Price Sheet No. C-RTL3-12R1 Effective January 15, 2012
Supersedes C-RTL3-12R

All prices exclusive of Federal Excise Tax, FOB Destination and subject to any other applicable taxes. All weights subject to a plus or minus of 5%.

R SERIES
REAR LOADING TRAILERS
TRIPLE AXLE/LEVEL PLATFORM
40 AND 50 Ton
(in any 16'-0" of deck)

STANDARD FEATURES AND EQUIPMENT

Fixed (rigid) gooseneck
Narrow gooseneck
Pin setting - 16"
Fifth wheel height - 50" loaded
Swing clearance - 84"
Telescopic drop legs
Concentrated load in 16'
Main frame - Four beam type
One piece crossmembers on 24" centers
Deck height - 36" loaded
Deck width - 8'-6" (102")
Deck length - 19'-0"
Decking - 1 1/2" Apitong, full width
Deck securement - deck screws
Load bearing bolsters between axles
Load bearing rear half bolster
Rear loading ledges

30" Beavertail steel with traction aids
Multi-leaf spring suspension with adjustable torque rods
Tires - 255/70R 22.5 (H) 16 PR tubeless radials
Hubs - hub piloted with outboard drums
Wheels - 8.25 x 22.5 steel disc (white)
Brakes - 16 1/2" x 7" full air
Spring brakes - one (1) axle (center axle)
Anti-Lock brakes (2S/2M)
Automatic slack adjusters
Axles - 22,500 pounds with oil bearings
Lighting - L.E.D. type - rubber mounted - mid turn signal
Finish - shot blast / epoxy primer / urethane finish
Air lines - glad hands
Electrical - 7 way receptacle
Lashing rings -
  40 ton - 8 (4 each side)
  50 ton - 10 (5 each side)
Mud flaps
Red and white conspicuity markings

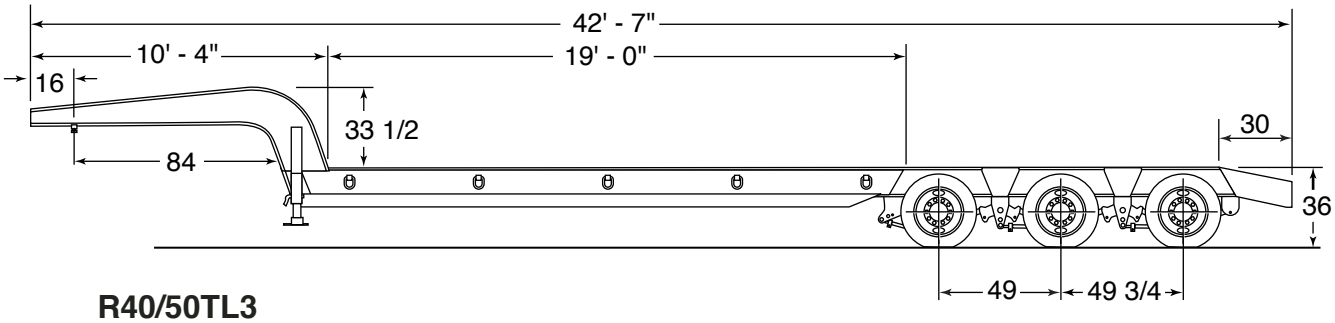

R40/50TL3

Model	Capacity	Deck	Axles	Tire Size	List Price	Wt. (Lbs.)
R40TL3	40	19' level	3	255/70R 22.5 (H)	**$54,550.00**	14,000#
R50TL3	50	19' level	3	255/70R 22.5 (H)	**$61,950.00**	15,300#

C-RTL3

OPTIONAL FEATURES AND EQUIPMENT

	R40TL3		R50TL3	
	Price	**Wt. (Lbs.)**	**Price**	**Wt. (Lbs.)**
Gooseneck				
Extra length				
96" Clearance radius	**$540.00**	230	**$550.00**	250
108" Clearance radius	**1,075.00**	460	**1,100.00**	500
120" Clearance radius	**1,640.00**	690	**1,660.00**	750
Additional king pin settings, each	**400.00**	70	**400.00**	70
Alternate fifth wheel heights (50" standard)				
48"	**150.00**	0	**185.00**	0
52"	**150.00**	0	**185.00**	0
54"	**260.00**	110	**275.00**	120
Full width gooseneck (Apitong flooring) Includes vertical drop with splash plates	**2,100.00**	950	**2,100.00**	950
Gooseneck fenders (8'-6" wide/non load bearing)	**1,000.00**	370	**1,000.00**	370
Motor grader ramps	**1,700.00**	820	**1,700.00**	820
Telescopic drop legs	Std.	Std.	Std.	Std.
2 Speed landing gear	**550.00**	130	**550.00**	130
Tool box with lid (over king pin area)	**250.00**	90	**250.00**	90
Spare tire carrier (over king pin area/not available with tool box)	**200.00**	25	**200.00**	25
Platform (Deck)				
8'-6" (102") deck width	Std.	Std.	Std.	Std.
9'-0" (108") deck width	**530.00**	300	**575.00**	350
9'-6" (114") deck width	**1,065.00**	600	**1,150.00**	700
10'-0" (120") deck width	**1,585.00**	900	**1,725.00**	1,050
Extra deck length				
2'-0" (21'-0" deck/44'-0" OAL)	**640.00**	460	**660.00**	500
4'-0" (23'-0" deck/46'-0" OAL)	**1,275.00**	920	**1,325.00**	1,000
6'-0" (25'-0" deck/48'-0" OAL)	**1,920.00**	1,380	**2,000.00**	1,500
Apitong flooring in lieu of standard	**Std.**	100	**Std.**	100
Double drop deck (24" loaded deck height) (includes front half bolster/increases length)	**1,750.00**	760	**1,925.00**	850
Outriggers (swing out brackets) set for 2" planks				
Platform length - 19'-0" (42'-0" OAL)	**1,530.00**	220	**1,530.00**	220
Platform length - 21'-0" (44'-0" OAL)	**1,620.00**	240	**1,620.00**	240
Platform length - 23'-0" (46'-0" OAL)	**1,885.00**	260	**1,885.00**	260
Platform length - 25'-0" (48'-0" OAL)	**1,985.00**	280	**1,985.00**	280
Additional lashing rings, each	**45.00**	5	**45.00**	5
Recessed lash rings (in deck), each	**90.00**	10	**90.00**	10
Stake pockets (standard configuration), each	**90.00**	10	**90.00**	10
Wheel Well Area (Rear Section)				
Wheel well covers, (over tires only/raises height 4")	**2,695.00**	300	**2,695.00**	300
48" Rear sloping afterdeck (beavertail), in lieu of std. 30"	**575.00**	300	**575.00**	350
Wood filled beavertail (Oak or Apitong to match deck)	**250.00**	50	**250.00**	50
Omit beavertail.	**(1,070.00)**	(750)	**(1,070.00)**	(750)
Rear folding ramps (19" wide x 54" long), includes spring assist	**1,200.00**	510	**1,200.00**	510
* 8' x 36" Wide Bi-fold hydraulic ramps with electric-hydraulic power	**5,150.00**	2,060	**5,150.00**	2,060
*12' x 36" Wide bi-fold hydraulic ramps with electric-hydraulic power	**6,725.00**	2,480	**6,725.00**	2,480
Outriggers (swing out brackets) removable type (for rear section)				
Triple axle, level deck (single drop)	**785.00**	150	**785.00**	150
Triple axle, drop deck (double drop)	**1,050.00**	200	**1,050.00**	200

OPTIONAL FEATURES AND EQUIPMENT

	R40TL3		R50TL3	
	Price	**Wt. (Lbs.)**	**Price**	**Wt. (Lbs.)**
Suspension				
Spring/beam TR8600 (or equivalent)	**2,925.00**	350	N/A	N/A
Spring/beam TR8750 (or equivalent)	**3,675.00**	390	**3,675.00**	390
Air ride suspension (54" axle spacing) includes Etnyre manual raising and lowering of air suspension (short moves only, manual pin relocation required)	**5,410.00**	320	**5,410.00**	320
Air exhaust valve	**300.00**	10	**300.00**	10
Axles and Brakes				
Spring brakes - one (1) axle standard, per additional axle	**235.00**	30	**235.00**	30
Hubometer	**105.00**	10	**105.00**	10
Anti-Lock brakes (2S/2M System)	Std.	Std.	Std.	Std.
22,500# Capacity axles (5/8" wall)	Std.	Std.	Std.	Std.
25,000# Capacity axles (3/4" wall) **per axle**	**235.00**	35	**235.00**	35
Tires and Wheels				
255/70R 22.5 (H) 16 PR radials	Std.	Std.	Std.	Std.
8.25 x 22.5 Steel disc wheels (with 255/70R 22.5 tires)	Std.	Std.	Std.	Std.
Hub piloted disc wheels (8 - hole)	Std.	0	Std.	0
Electrical				
Additional side clearance lights (per pair)	**110.00**	5	**110.00**	5
Additional mid turn signals (per pair)	**95.00**	10	**95.00**	10
3rd Tail light package	**95.00**	10	**95.00**	10
LED (Light Emitting Diodes) lights	Std.	0	Std.	0
Paint				
Black finish	Std.	Std.	Std.	Std.
Yellow finish	N/C	0	N/C	0
Red finish	N/C	0	N/C	0
Paint, other than standard color enamel, color matched *(Does not include polyurethene, metallics and Imron finishes)*	**990.00**	0	**990.00**	0

* Ramp prices cover new ramps supplied with trailer. If ordered at a later date, please contact our Parts Department for quote.

E. D. ETNYRE & CO., Oregon, Illinois 61061-9778
1333 South Daysville Road • Phone 800/995-2116 or 815/732-2116 • Fax: 815/732-7400

Price Sheet No. C-SR35-12R1 Effective January 15, 2012
Supersedes C-SR35-12R

All prices exclusive of Federal Excise Tax, FOB Destination and subject to any other applicable taxes. All weights subject to a plus or minus of 5%.

SR SERIES
REAR LOADING TANDEM AXLE
HYDRAULIC RAMP TRAILER
35 Ton

STANDARD FEATURES AND EQUIPMENT

48'-0" Overall length
Fixed (rigid) gooseneck
Full width gooseneck
Pin setting - 16"
Swing clearance - 80"
2:1 Gooseneck slope (26 1/2°)
Telescopic drop legs
Level platform (deck)
Fifth wheel height - 50" loaded
Capacity - 35 ton distributed
30 ton in 10'-0"
Main frame - Four beam type
100,000 P.S.I. steel mainbeams
One (1) piece crossmembers on 24" centers
Deck height - 33" loaded
Deck width - 8'-6" (102")
Decking - 1 1/2"Apitong, full width
Deck securement - deck screws
Tool box in gooseneck
Covered wheel wells - 1/4 steel floor plate

Load carrying hydraulic rear ramp
(50% of payload in center of ramp)
Load ramp - 8'-6" wide x 11'-0" long
Main ramp 8'-6" wide x 8'-0" long (wood deck, 13.5º load angle)
Approach ramp 8'-6" wide x 3'-0" long
(1/4" steel floor plate)
Ramp lock - compression blocks
Air ride suspension with hand control raise/lower valve
Tires - 235/75R 17.5 (H) 16 PR tubeless radials
Hubs - hub piloted
Wheels - 6.75 x 17.5 steel disc (white)
Brakes - 12 1/4" x 7 1/2" air
Spring brakes - one (1) axle (rear axle)
Anti-Lock brakes (2S/2M System)
Automatic slack adjusters
Axles - 22,500 pounds with oil bearings
Lighting - L.E.D. type - rubber mounted - mid turn signal
Finish - shot blast / epoxy primer / urethane finish
Air lines - glad hands
Electrical - 7 way receptacle
Lashing rings - 14 (7 each side/"bent" style)
Mud flaps
Red and white conspicuity markings

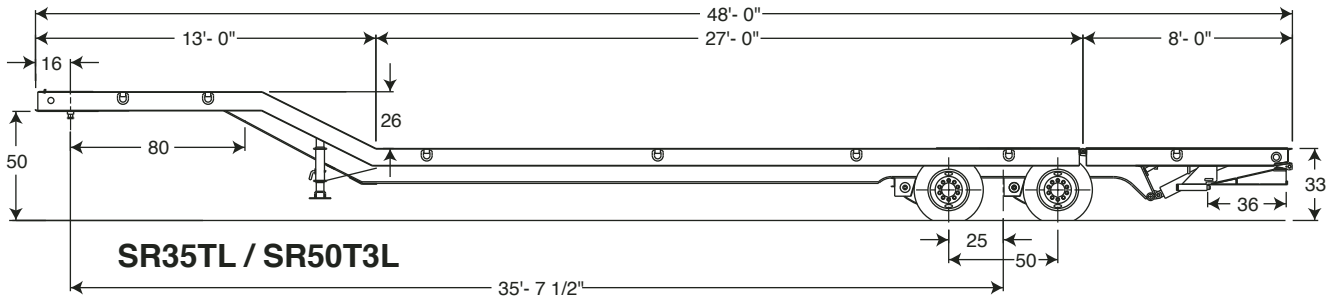

Model	Capacity	Deck	Axles	Tire Size	List Price	Wt. (Lbs.)
SR35TL	35	27'-0" (48' OAL)	2	235/75R 17.5 (H)	**$66,275.00**	16,330#
SR50T3L *	50	27'-0" (48' OAL)	3	235/75R17.5 (H)	**$80,500.00**	20,030#

**Contact factory for detailed specifications*

OPTIONAL FEATURES AND EQUIPMENT

	All Models Price	Wt. (Lbs.)
Gooseneck		
Extra length		
96" Clearance radius	**$575.00**	300
108" Clearance radius	**1,200.00**	600
120" Clearance radius	**1,675.00**	900
Alternate fifth wheel heights (50" standard)		
48"	**125.00**	(60)
52"	**125.00**	60
54"	**230.00**	110
Two (2) gooseneck ramps, 1' x 6', wood	**545.00**	160
Two (2) gooseneck ramps, 1' x 6', steel with traction bars	**935.00**	280
Telescopic drop legs	Std.	Std.
2 Speed landing gear	**550.00**	130
12,000# Hydraulic winch with 100 ft. of 7/16" cable and hook	**4,400.00**	450
20,000# Hydraulic winch with 100 ft. of 9/16" cable and hook	**5,550.00**	550
Remote control for winch (100' cable)	**1,265.00**	80
Remote control for winch (wireless)	**1,375.00**	20
Spare tire carrier (over kingpin area)	**200.00**	25
13 HP Honda engine power pack, self contained. Mounted in box on gooseneck	**5,650.00**	420
Platform (Deck)		
8'-6" (102") deck width	Std.	Std.
9'-0" (108") deck width	**1,350.00**	640
9'-6" (114") deck width	**2,695.00**	1,380
10'-0" (120") deck width	**4,000.00**	2,020
Extra deck length		
2'-0" (50'-0" OAL)	**1,200.00**	300
4'-0" (52'-0" OAL)	**2,400.00**	600
6'-0" (54'-0" OAL)	**3,600.00**	900
14 ° Hydraulic ramp (platform to gooseneck) 8'-6" wide	**4,175.00**	1000
Apitong flooring	Std.	Std.
Auxiliary crossmembers (full width between crossmembers, 12" centers, ***Lower Deck Only***)	**1,500.00**	390
Auxiliary crossmembers (full width between crossmembers, 8" centers, ***Lower Deck Only***)	**1,925.00**	650
Auxiliary crossmembers (full width between crossmembers, 12" centers, ***Full Length of Trailer*** including gooseneck and deck)	**2,100.00**	700
Auxiliary crossmembers (full width between crossmembers, 8" centers, ***Full Length of Trailer*** including gooseneck and deck)	**2,600.00**	850
Outriggers, swing out brackets, set for 2' plank, (cast)		
48'-0" Overall length (17 brackets per side)	**2,175.00**	310
50'-0" Overall length (18 brackets per side)	**3,290.00**	330
52'-0" Overall length (19 brackets per side)	**3,510.00**	350
54'-0" Overall length (20 brackets per side)	**3,625.00**	370
Additional lashing rings, each	**45.00**	5
Recessed lash rings (in deck), each	**90.00**	10
Stake pockets	Consult Factory	
Wheel Well Area (Rear Section)		
14'-0" Long x 8'-6" wide 10.5° load ramp (maintains same overall length)	**2,900.00**	580
Floor plate on ramps (steel)	**275.00**	160
Traction bars on ramps	**750.00**	150

C-SR

OPTIONAL FEATURES AND EQUIPMENT

	All Models	
	Price	**Wt. (Lbs.**
Suspension		
Single point spring suspension	**500.00**	(180)
Air ride suspension	Std.	Std.
Manual exhaust valve	**300.00**	10
Axles and Brakes		
Spring brakes - one (1) axle standard, per additional axle	**235.00**	30
Hubometer	**105.00**	10
Anti-Lock brakes (2S/2M System)	Std.	Std.
22,500# Capacity axles (5/8" wall)	Std.	Std.
25,000# Capacity axles (3/4" wall) Per Axle	**235.00**	35
Tires and Wheels		
235/75R 17.5 (H) 16 PR tubeless radials	Std.	Std.
6.75 x 17.5 Steel disc wheels (white)	Std.	Std.
*255/70R22.5 (H) tubeless radial tires. (Requires spring brakes on all axles. Increases loaded deck height to 38"/Requires 14' - 0" long ramp).	**990.00**	400
Electrical		
Additional side clearance lights (per pair)	**110.00**	5
Additional mid turn signals (per pair)	**95.00**	10
3rd Tail light package	**95.00**	10
LED (Light Emitting Diodes) lights	Std.	0
Paint		
Black finish	Std.	Std.
Yellow finish	N/C	0
Red finish	N/C	0
Paint, other than standard color enamel, color matched (Does not include polyurethene, metallics and Imron finishes)	**990.00**	0

* Requires 14' - 0" long ramp with 255/70R 22.5 tires

E. D. ETNYRE & CO., Oregon, Illinois 61061-9778
1333 South Daysville Road • Phone 800/995-2116 or 815/732-2116 • Fax: 815/732-7400

Price Sheet No. C-MRG30/35/40-12R1 Effective January 15, 2012
Supesedes C-MRG30/35/40-12R

All prices exclusive of Federal Excise Tax, FOB Destination and subject to any other applicable taxes. All weights subject to a plus or minus of 5%.

MRG SERIES
MECHANICAL
REMOVABLE GOOSENECK
FRONT LOADING TRAILERS
30 and 35 Ton
(in any 16'-0" of deck)

STANDARD FEATURES AND EQUIPMENT

Mechanical removable gooseneck
Full width gooseneck platform with 1 1/2" Apitong
Six (6) slot type tie downs on gooseneck platform
Swing-A-Way stirrups (tear drops)
Pin setting - 16"
Swing clearance - 84"
Fifth wheel height - 50" loaded
Concentrated load in 16'-0"
Main frame - 4 beam design - 12" fully cambered
100,000 PSI yield strength steel construction
8" I Beam crossmembers on 24" centers
Positive gooseneck locking pin (viewable from tractor)
Deck height - 18" loaded
Ground clearance - 6" loaded
Deck width - 8'-6" (102")
Top flange reinforcement - front slope
Decking - 1 1/2" Apitong (butt joint)
Deck securement - deck screws
Outriggers - None

Full width rear load deck (platform), traction bars on slope. 1 1/2" Apitong full width
Six (6) slot type tie downs on rear platform
Ridewell air suspension
Manual exhaust valve
Tires - (8) 255/70R 22.5 (H), 16 PR tubeless radials
Hubs - Hub piloted with outboard drums
Wheels - (8) 8.25 x 22.5 steel disc (white)
Axles - 22,500 pounds with oil bearings
Axle spacing - 50"
Anti-Lock brakes (2S/2M System) .
Brakes - 16 1/2" x 7" air
Spring brakes - one (1) axle (rear axle)
Automatic slack adjusters
Lighting - L.E.D. type - rubber mounted - mid turn signal
Finish - shot blast / epoxy primer / urethane finish
Air lines - glad hands
Electrical - 7 way receptacle
Lashing rings - 10 (5 each side)
Mud flaps
Red and white conspicuity markings

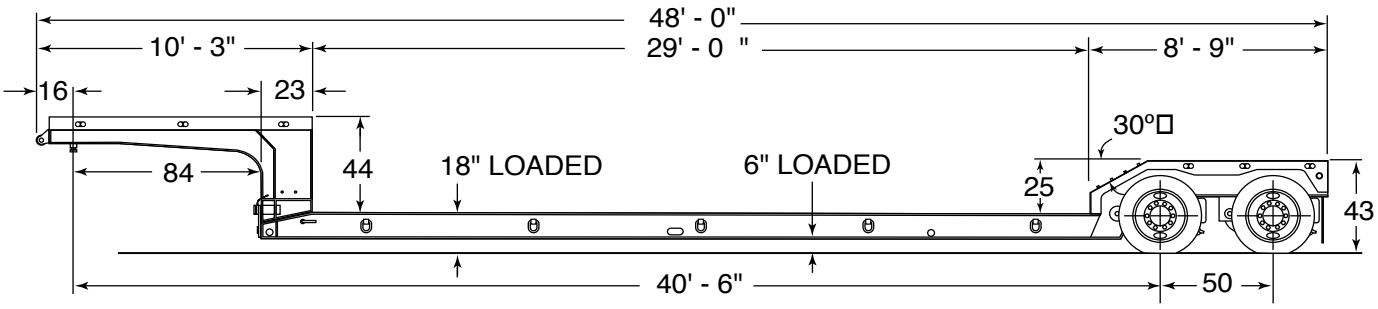

MRG30/35TD

Model	Capacity	Deck	Axles	Tire Size	List Price	Weight (Lbs.)
MRG30TD	30	29'-0"	2	255/70R 22.5 (H)	**$54,550.00**	15,100
MRG35TD	35	29'-0"	2	255/70R 22.5 (H)	**$56,500.00**	16,730

C-MRG

	Price	Wt. (Lbs.)
Mechanical Gooseneck		
12'-3" Mechanical gooseneck with 108" swing clearance (increases length by 24")	**$450.00**	250
Additional kingpin setting, each	**$450.00**	160
Optional fifth wheel heights	Consult Factory	
Tool box in gooseneck (in drop/between mainbeams)	**350.00**	120
Narrow gooseneck (in lieu of standard)	**(950.00)**	320
Fixed gooseneck	**(2,150.00)**	(320)
Air actuated gooseneck to deck locking pin	**400.00**	125
Platform (Deck)		
Additional length		
2'-0" (31'-0" deck length . . . adds 2'-0" to OAL)	**1,100.00**	700
4'-0" (33'-0" deck length . . . adds 4'-0" to OAL)	**2,200.00**	1,400
8'-0" (96") deck width	**(300.00)**	(250)
9'-0" (108") deck width	**900.00**	300
Apitong flooring - 1 1/2" net (butt joint)	Std.	Std.
Delete center flooring	**(730.00)**	(500)
Outrigger planks - 2" X 10" oak	**1,125.00**	520
12" Cast removable/swinging outriggers	**1,175.00**	280
Additional lash rings, each	**45.00**	5
Recessed lash rings (in deck), each	**90.00**	10
Stake pockets, Each	**90.00**	5
Frame Reinforcement		
Frame reinforcement for flip axle OO^O	**1,750.00**	700
Brackets, electrical and air connections for future flip (must order frame reinforcement. Frame reinforcement does not include brackets, electrical or air connections.) This additive is not required if flip axle is ordered with trailer.	**575.00**	160
Maximum number of axles in any configuration	3	3
Trailer capacity concentrated in 10'-0"	**825.00**	400
40 ton capacity	**2,500.00**	1,200
Wheel Area (Rear Section)		
55" Axle spacing (increases length)	**325.00**	120
60 1/2" Axle spacing (increases length)	**880.00**	300
Boom trough in center	**1,100.00**	(300)
Suspensions		
Ridewell air suspension	Std.	Std.
Manual exhaust valve	Std.	Std.
Hendrickson/Turner air suspension	**275.00**	120
Neway air suspension	**1,585.00**	120
Multi-leaf spring suspension (increase length)	**(2,350.00)**	(300)
Single point spring suspension	**(1,400.00)**	(100)
Scale-O-Matic (with one access station plumbed to driver's side of trailer at rear of deck)	**350.00**	3

	Price	Wt. (Lbs.)
Axles and Brakes		
Flip axle with air suspension, standard tires, axles and all connections (must add needed frame reinforcement). Adds to overall length		
96" width	**12,700.00**	2,720
102" width	**12,750.00**	2,820
108" width	**13,100.00**	2,920
Non-load bearing cover for flip axle (outsides only . . . steel or wood)	**$440.00**	220
Load bearing cover for flip axle (steel or wood)	**965.00**	350
3rd axle fixed on air ride suspension	**6,100.00**	2,510
Hubometer	**105.00**	10
Anti-Lock brakes (2S/2M System)	Std.	Std.
Spring brakes - one axle standard, per additional axle	**235.00**	30
22,500# capacity axles (5/8" wall)	Std.	Std.
25,000# capacity axles (3/4" wall), per axle	**235.00**	35
Tires and Wheels		
255/70R 22.5 (H) 16 PR Tubeless radial tires	Std.	Std.
22.5 x 8.25 steel disc wheels (hub piloted)	Std.	Std.
22.5 x 8.25 Aluminum wheels, outside polished, inside machine finished, outboard mount, hub piloted, 2 axles	**2,500.00**	(220)
22.5 x 8.25 Aluminum wheels, outside polished, inside machine finished, outboard mount, hub piloted, 3 axles	**3,750.00**	(330)
Electrical		
Additional side clearance lights (per pair) (5 pairs maximum)	**110.00**	5
Additional mid turn signals (per pair)	**95.00**	10
3rd Tail light package	**95.00**	10
LED (Light Emitting Diodes) lights	Std.	0
Swing out light/brackets, 2 @ gooseneck, 2 @ rear	**1,500.00**	40
Paint		
Black finish	Std.	Std.
Yellow finish	N/C	0
Red finish	N/C	0
Paint, other than standard color enamel, color matched (does not include polyurethene, metallics or Imron finishes)	**990.00**	0

C-MRG

E. D. ETNYRE & CO., Oregon, Illinois 61061-9778
1333 South Daysville Road • Phone 800/995-2116 or 815/732-2116 • Fax: 815/732-7400

Price Sheet No. C-HFR-TL-12R1 Effective January 15, 2012 Supersedes C-HFR-TL-12R	**HFR SERIES** HYDRAULIC FOLDING GOOSENECK FRONT and REAR LOADING TRAILERS TANDEM AXLE/LEVEL PLATFORM **35 Ton** (in any 16'-0" of deck)
All prices exclusive of Federal Excise Tax, FOB Destination and subject to any other applicable taxes. All weights subject to a plus or minus of 5%.	

STANDARD FEATURES AND EQUIPMENT

Hydraulic folding gooseneck
Self lifting gooseneck
Non ground engaging gooseneck
Full width gooseneck
Wet line/P.T.O. operation
Floating kingpin
Pin setting - 16"
Fifth wheel height - 50" loaded
Concentrated load in 16'-0"
Main frame - 4 beam design
100,000 P.S.I. steel mainbeams
One (1) piece crossmembers on 24" centers
Deck height - 36" loaded
Deck width - 8'-6" (102")
Decking - 1 1/2" Apitong, full width
Deck securement - deck screws
Multi-leaf spring suspension with adjustable torque rods
Tires - 255/70R 22.5 (H) 16 PR tubeless radials
Hubs - Hub piloted with outboard drums
Wheels - 8.25 x 22.5 steel disc (white)
Brakes - 16 1/2" x 7" air
Spring brakes - one (1) axle (rear axle)
Anti-Lock brakes (2S/2M System)
Automatic slack adjusters
Axles - 22,500 pounds with oil bearings
Lighting - L.E.D. type - rubber mounted - mid turn signal
Finish - shot blast / epoxy primer / urethane finish
Air lines - glad hands
Electrical - 7 way receptacle
Lashing rings - 8 (4 each side)
Mud flaps
Red and white conspicuity markings

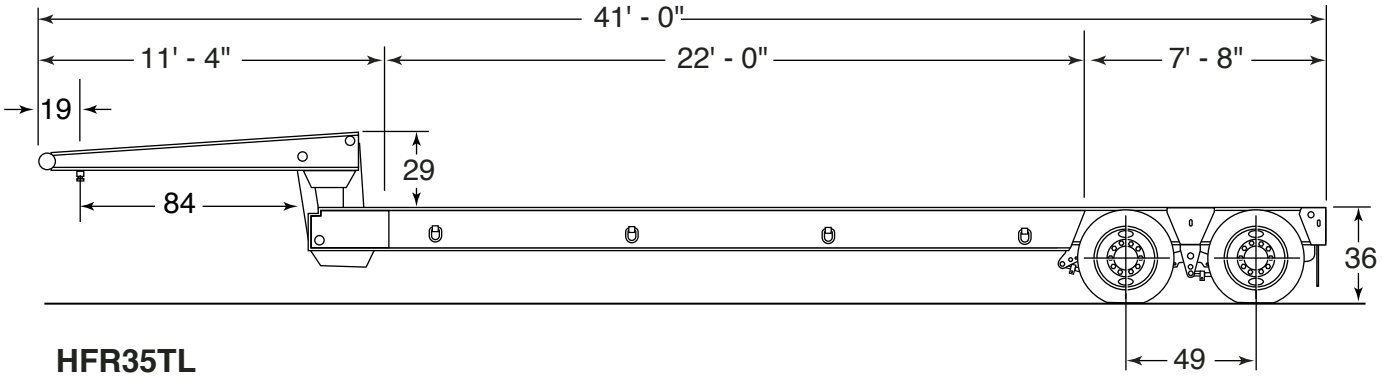

HFR35TL

Model	Capacity	Deck	Axles	Tire Size	List Price	Wt. (Lbs.)
HFR35TL	35	22' level	2	255/70R 22.5 (H)	**$66,000.00**	17,270#

E. D. ETNYRE & CO., Oregon, Illinois 61061-9778
1333 South Daysville Road • Phone 800/995-2116 or 815/732-2116 • Fax: 815/732-7400

Price Sheet No. C-HFR-TD-12R 1 Effective January 15, 2012 Supersedes C-HFR-TD-12R	**HFR SERIES** HYDRAULIC FOLDING GOOSENECK FRONT and REAR LOADING TRAILERS TANDEM AXLE/DROP PLATFORM **35 Ton** (in any 16'-0" of deck)
All prices exclusive of Federal Excise Tax, FOB Destination and subject to any other applicable taxes. All weights subject to a plus or minus of 5%.	

STANDARD FEATURES AND EQUIPMENT

Hydraulic folding gooseneck
Self lifting gooseneck
Non ground engaging gooseneck
Full width gooseneck
Wet line/P.T.O. operation
Floating kingpin
Pin setting - 16"
Fifth wheel height - 50" loaded
Concentrated load in 16'-0"
Main frame - 4 beam design
100,000 P.S.I. steel mainbeams
One (1) piece crossmembers on 24" centers
Deck height - 24" loaded
Deck width - 8'-6" (102")
Decking - 1 1/2" Apitong, full width
Deck securement - deck screws

Multi-leaf spring suspension with adjustable torque rods
Tires - 255/70R 22.5 (H) 16 PR tubeless radials
Hubs - Hub piloted with outboard drums
Wheels - 8.25 x 22.5 steel disc (white)
Brakes - 16 1/2" x 7" air
Spring brakes - one (1) axle (rear axle)
Anti-Lock brakes (2S/2M System)
Automatic slack adjusters
Axles - 22,500 pounds with oil bearings
Lighting - L.E.D. type - rubber mounted - mid turn signal
Finish - shot blast / epoxy primer / urethane finish
Air lines - glad hands
Electrical - 7 way receptacle
Lashing rings - 8 (4 each side)
Mud flaps
Red and white conspicuity markings

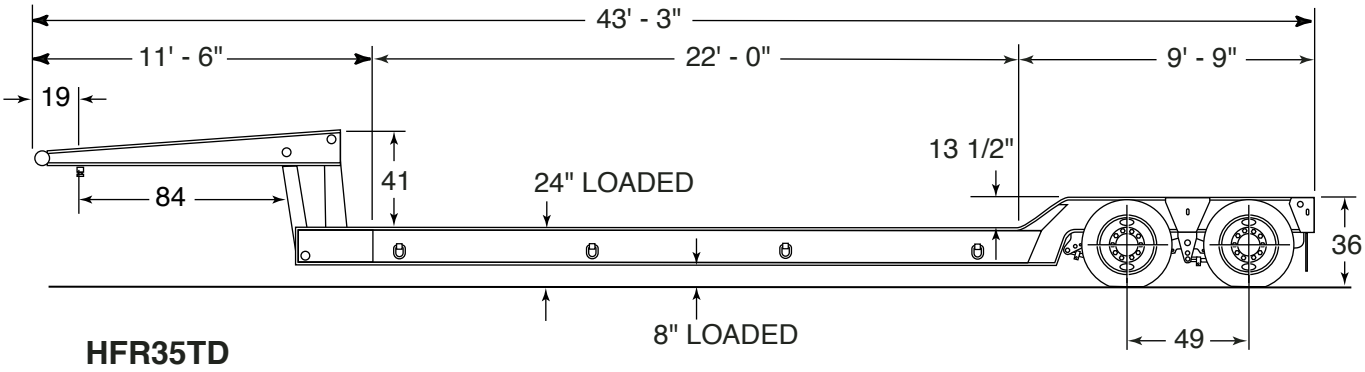

HFR35TD

Model	Capacity	Deck	Axles	Tire Size	List Price	Wt. (Lbs.)
HFR35TD	35	22' level	2	255/70R 22.5 (H)	**$68,395.00**	17,670#

OPTIONAL FEATURES AND EQUIPMENT

	HFR35TL Level Platform		HFR35TD Drop Platform	
	Price	**Wt. (Lbs.)**	**Price**	**Wt. (Lbs.)**
Gooseneck				
Extra length				
96" Clearance radius	**$575.00**	290	**$575.00**	290
108" Clearance radius	**1,200.00**	580	**1,200.00**	580
120" Clearance radius	**1,700.00**	870	**1,700.00**	870
Alternate fifth wheel height	Consult Factory		Consult Factory	
Additional kingpin settings, each	**450.00**	160	**450.00**	160
Tapered nose.	**440.00**	100	**440.00**	100
Dummy links (Filler/Spacers between gooseneck and deck when gooseneck is lowered to ground.)	**1,000.00**	250	**1,000.00**	250
13 HP Honda engine package, self contained	**3,420.00**	420	**3,420.00**	420
Mechanical folding gooseneck (requires tractor winch) in lieu of hydraulic folding (lengthens trailer 4 1/2")	**(3,600.00)**	(750)	**(3,600.00)**	(750)
Platform (Deck)				
8'-6" (102") deck width	Std.	Std.	Std.	Std.
9'-0" (108") deck width	**1,400.00**	500	**1,400.00**	600
10'-0" (120") deck width	**4,325.00**	2,000	**4,325.00**	2,000
Extra deck length				
2'-0" (24' deck length)	**1,275.00**	580	**1,275.00**	580
4'-0" (26' deck length)	**2,550.00**	1,160	**2,550.00**	1,160
Apitong flooring	Std.	Std.	Std.	Std.
Outriggers, swing out brackets, set for 2" planks				
Platform length 22'	**1,890.00**	260	**1,890.00**	260
Platform length 24'	**1,985.00**	280	**1,985.00**	280
Platform length 26'	**2,085.00**	300	**2,085.00**	300
Additional lashing rings, each	**45.00**	5	**45.00**	5
Recessed lash rings (in deck), each	**90.00**	10	**90.00**	10
Wheel Well Area				
Wheel well covers (over tires only/raises height 4")	**1,695.00**	600	**1,695.00**	600
1/8" Floor plate between mainbeams	**300.00**	80	**300.00**	80
1/4" Floor plate between mainbeams	**400.00**	260	**400.00**	26
36" Rear sloping afterdeck (beavertail)	**1,485.00**	910	**1,485.00**	910
48" Rear sloping afterdeck (beavertail)	**2,100.00**	1,070	**2,100.00**	1,070
Suspension				
Multi-leaf spring suspension	Std.	Std.	Std.	Std.
Single point spring suspension	**1,500.00**	180	**1,500.00**	180
Air ride suspension (55" axle spacing) includes Etnyre manual raising and lowering of air suspension (short moves only, manual pin relocation required)	**3,480.00**	100	**3,480.00**	100
Air exhaust valve	**300.00**	0	**300.00**	10
Axles and Brakes				
Spring brakes - one (1) axle standard, per additional axle	**235.00**	30	**235.00**	30
Hubometer	**105.00**	10	**105.00**	10
Anti-Lock brakes (2S/2M System)	Std.	Std.	Std.	Std.
22,500# Capacity axles (5/8" wall)	Std.	Std.	Std.	Std.
25,000# Capacity axles (3/4" wall) Each	**235.00**	35	**235.00**	35
Tires and Wheels				
255/70 R. 22.5 (H) 16 PR Radials	Std.	Std.	Std.	Std.
8.25 x 22.5 Steel disc wheels	Std.	Std.	Std.	Std.

OPTIONAL FEATURES AND EQUIPMENT

	HFR35TL Level Platform		HFR35TD Drop Platform	
	Price	**Wt. (Lbs.)**	**Price**	**Wt. (Lbs.)**
Electrical				
Additional side clearance lights (per pair)	**110.00**	5	**110.00**	5
Additional mid turn signals (per pair)	**95.00**	10	**95.00**	10
3rd Tail light package	**95.00**	10	**95.00**	10
LED (Light Emitting Diodes) lights	Std.	0	Std.	0
Paint				
Black finish	Std.	Std.	Std.	Std.
Yellow finish	N/C	0	N/C	0
Red finish	N/C	0	N/C	0
Paint, other than standard color enamel, color matched (Does not include polyurethene, metallics and Imron finishes)	**990.00**	0	**990.00**	0

E. D. ETNYRE & CO., Oregon, Illinois 61061-9778
1333 South Daysville Road • Phone 800/995-2116 or 815/732-2116 • Fax: 815/732-7400

Price Sheet No. C-HFR-TL3-12R1 Effective January 15, 2012 Supersedes C-HFR-TL3-12R	**HFR SERIES** HYDRAULIC FOLDING GOOSENECK FRONT and REAR LOADING TRAILERS TRIPLE AXLE/LEVEL PLATFORM **40 and 50 Ton** (in any 16'-0" of deck)
All prices exclusive of Federal Excise Tax, FOB Destination and subject to any other applicable taxes. All weights subject to a plus or minus of 5%.	

STANDARD FEATURES AND EQUIPMENT

Hydraulic folding gooseneck
Self lifting gooseneck
Non ground engaging gooseneck
Full width gooseneck
Wet line/P.T.O. operation
Floating kingpin
Pin setting - 16"
Fifth wheel height - 50" loaded
Concentrated load in 16'-0"
Main frame - 4 beam design
100,000 P.S.I. steel mainbeams
One (1) piece crossmembers on 24" centers
Deck height - 36" loaded
Deck width - 8'-6" (102")
Decking - 1 1/2" Apitong, full width
Deck securement - deck screws
Multi-leaf spring suspension with adjustable torque rods

Tires - 255/70R 22.5 (H) 16 PR tubeless radials
Hubs - Hub piloted with outboard drums
Wheels - 8.25 x 22.5 steel disc (white)
Brakes - 16 1/2" x 7" air
Spring brakes - one (1) axle (center axle)
Anti-Lock brakes (2S/2M System)
Automatic slack adjusters
Axles - 22,500 pounds with oil bearings
Lighting - L.E.D. type - rubber mounted - mid turn signal
Finish - shot blast / epoxy primer / urethane finish
Air lines - glad hands
Electrical - 7 way receptacle
Lashing rings -
40 ton - 8 (4 each side)
50 ton - 10 (5 each side)
Mud flaps
Red and white conspicuity markings

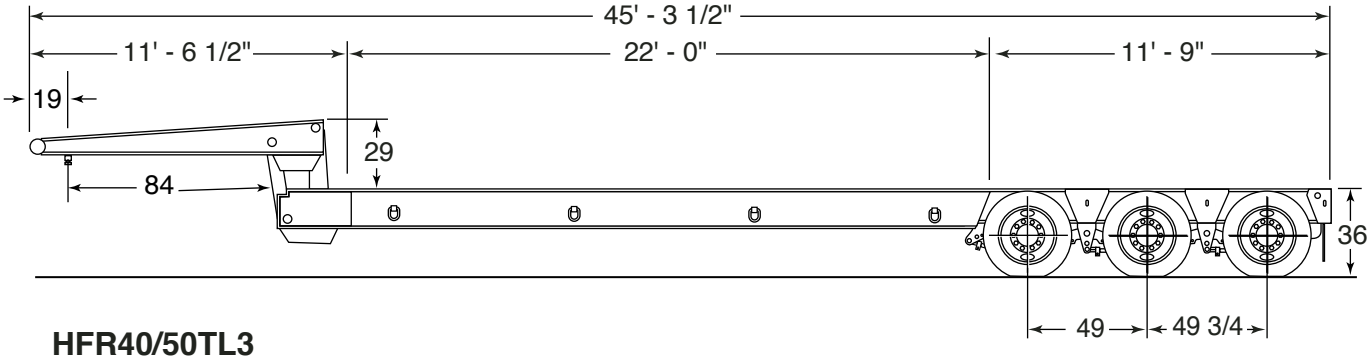

HFR40/50TL3

Model	Capacity	Deck	Axles	Tire Size	Lis t Price	Wt. (Lbs.)
HFR40TL3	40	22' level	3	255/70R 22.5 (H)	**$77,850.00**	21,150#
HFR50TL3	50	22' level	3	255/70R 22.5 (H)	**$80,500.00**	22,250#

C-HFR-TL3

OPTIONAL FEATURES AND EQUIPMENT

	HFR40TL3 Level Platform		HFR50TL3 Level Platform	
	Price	**Wt. (Lbs.)**	**Price**	**Wt. (Lbs.)**
Gooseneck				
Extra length				
96" Clearance radius	**$775.00**	330	**$890.00**	350
108" Clearance radius	**1,550.00**	660	**1,795.00**	700
120" Clearance radius	**2,285.00**	990	**2,675.00**	1,050
Alternate fifth wheel height	Consult Factory		Consult Factory	
Additional kingpin settings, each	**450.00**	160	**450.00**	160
Tapered nose	**440.00**	100	**440.00**	100
Dummy links (Filler/spacers between goosneck and deck when gooseneck is lowered to ground.)	1,00**0.00**	250	**1,000.00**	250
13 HP Honda engine package, self contained	**3,420.00**	420	**3,420.00**	420
Mechanical folding gooseneck (requires tractor winch) in lieu of hydraulic folding (lengthens trailer 4 1/2")	**(3,600.00)**	(750)	**(3,600.00)**	(750)
Platform (Deck)				
8'-6" (102") deck width	Std.	Std.	Std.	Std.
9'-0" (108") deck width	**2,585.00**	700	**2,775.00**	850
10'-0" (120") deck width	**4,325.00**	2,000	**4,325.00**	2,000
Extra deck length				
2'-0" (24'-0" deck length)	**1,450.00**	600	**1,595.00**	660
4'-0" (26'-0" deck length)	**2,900.00**	1,200	**3,190.00**	1,320
Apitong flooring	Std.	Std.	Std.	Std.
Outriggers, swing out brackets, set for 2" planks				
Platform length 22'	**1,890.00**	260	**1,890.00**	260
Platform length 24'	**1,985.00**	280	**1,985.00**	280
Platform length 26'	**2,085.00**	300	**2,085.00**	300
Additional lashing rings, each	**45.00**	5	**45.00**	5
Recessed lash rings , each	**90.00**	10	**90.00**	10
Wheel Well Area				
Wheel well covers, (over tires only/raises height 4")	**2,975.00**	900	**2,975.00**	900
1/8" Floor plate between mainbeams	**425.00**	150	**425.00**	150
1/4" Floor plate between mainbeams	**650.00**	390	**650.00**	390
36" Rear sloping afterdeck (beavertail)	**1,485.00**	910	**1,600.00**	1,010
48" Rear sloping afterdeck (beavertail)	**2,100.00**	1,070	**2,100.00**	1,170
Suspension				
Multi-leaf spring suspension	Std.	Std.	Std.	Std.
Spring/beam TR8600 (or equivalent)	**2,910.00**	350	N/A	N/A
Spring/beam TR8750 (or equivalent)	**3,675.00**	390	**3,675.00**	390
Air ride suspension (55" axle spacing) includes Etnyre manual raising and lowering of air suspension (short moves only, manual pin relocation required)	**5,400.00**	320	**5,400.00**	320
Air exhaust valve	**300.00**	10	**300.00**	10
Axles and Brakes				
Spring brakes - one (1) axle standard, per additional axle	**235.00**	30	**235.00**	30
Hubometer	**105.00**	10	**105.00**	10
Anti-Lock brakes (2S/2M System)	Std.	Std.	Std.	Std.
22,500# Capacity axles (5/8" wall)	Std.	Std.	Std.	Std.
25,000# Capacity axles (3/4" wall)	**235.00**	35	**235.00**	35
Tires and Wheels				
255/70 R. 22.5 (H) 16 PR Radials	Std.	Std.	Std.	Std.
8.25 x 22.5 Steel disc wheels	Std.	Std.	Std.	Std.

OPTIONAL FEATURES AND EQUIPMENT

	HFR40TL3 Level Platform		HFR50TL3 Level Platform	
	Price	**Wt. (Lbs.)**	**Price**	**Wt. (Lbs.)**
Electrical				
Additional side clearance lights (per pair)	**110.00**	5	**110.00**	5
Additional mid turn signals (per pair)	**95.00**	10	**95.00**	10
3rd Tail light package	**95.00**	10	**95.00**	10
LED (Light Emitting Diodes) lights	Std.	0	Std.	0
Paint				
Black paint	Std.	Std.	Std.	Std.
Yellow paint	N/C	0	N/C	0
Red finish	N/C	0	N/C	0
Paint, other than standard color enamel, color matched (Does not include polyurethene, metallics and Imron finishes)	**990.00**	0	**990.00**	0

C-HFR-TL3

E. D. ETNYRE & CO., Oregon, Illinois 61061-9778
1333 South Daysville Road • Phone 800/995-2116 or 815/732-2116 • Fax: 815/732-7400

Price Sheet No. C-HFR-TD3-12R1 Effective January 15, 2012 Supersedes C-HFR-TD3-12R	**HFR SERIES** HYDRAULIC FOLDING GOOSENECK FRONT and REAR LOADING TRAILERS TRIPLE AXLE/DROP PLATFORM **40 and 50 Ton** (in any 16'-0" of deck)
All prices exclusive of Federal Excise Tax, FOB Destination and subject to any other applicable taxes. All weights subject to a plus or minus of 5%.	

STANDARD FEATURES AND EQUIPMENT

Hydraulic folding gooseneck
Self lifting gooseneck
Non ground engaging gooseneck
Full width gooseneck
Wet line/P.T.O. operation
Floating kingpin
Pin setting - 16"
Fifth wheel height - 50" loaded
Concentrated load in 16'-0"
Main frame - 4 beam design
100,000 P.S.I. steel mainbeams
One (1) piece crossmembers on 24" centers
Deck height - 24" loaded
Deck width - 8'-6" (102")
Decking - 1 1/2" Apitong, full width
Deck securement - deck screws
Multi-leaf spring suspension with adjustable torque rods

Tires - 255/70R 22.5 (H) 16 PR tubeless radials
Hubs - Hub piloted with outboard drums
Wheels - 8.25 x 22.5 steel disc (white)
Brakes - 16 1/2" x 7" air
Spring brakes - one (1) axle (center axle)
Anti-Lock brakes (2S/2M System)
Automatic slack adjusters
Axles - 22,500 pounds with oil bearings
Lighting - L.E.D. type - rubber mounted - mid turn signal
Finish - shot blast / epoxy primer / urethane finish
Air lines - glad hands
Electrical - 7 way receptacle
Lashing rings -
  40 ton - 8 (4 each side)
  50 ton - 10 (5 each side)
Mud flaps
Red and white conspicuity markings

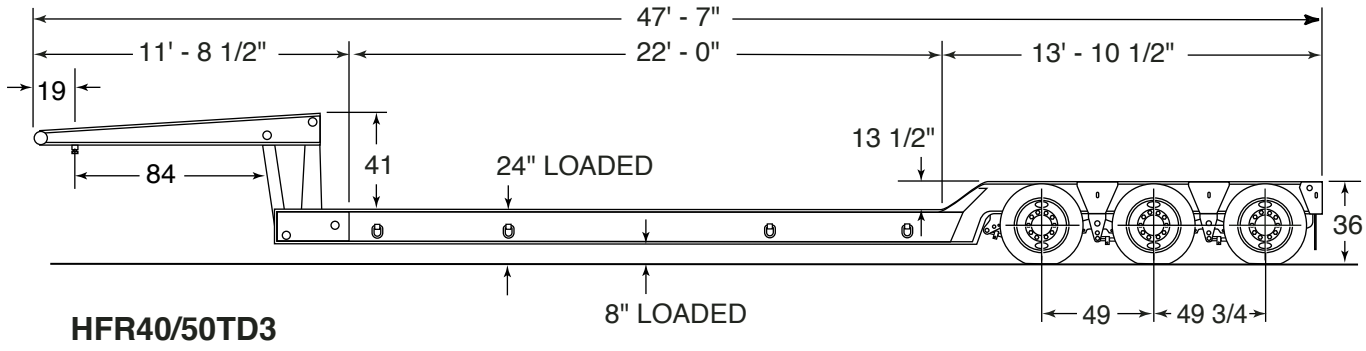

HFR40/50TD3

Model	Capacity	Deck	Axles	Tire Size	List Price	Wt. (Lbs.)
HFR40TD3	40	22' level	3	255/70R 22.5 (H)	**$79,500.00**	21,500#
HFR50TD3	50	22' level	3	255/70R 22.5 (H)	**$83,200.00**	22,750#

OPTIONAL FEATURES AND EQUIPMENT

	HFR40TD3 Drop Platform		HFR50TD3 Drop Platform	
	Price	**Wt. (Lbs.)**	**Price**	**Wt. (Lbs.)**
Gooseneck				
Extra length				
96" Clearance radius	**$775.00**	330	**$890.00**	350
108" Clearance radius	**1,550.00**	660	**1,795.00**	700
120" Clearance radius	**2,285.00**	990	**2,675.00**	1,050
Alternate fifth wheel height	Consult Factory		Consult Factory	
Additional kingpin settings, each	**450.00**	160	**450.00**	160
Tapered nose	**440.00**	100	**440.00**	100
Dummy links (Filler/spacers between goosneck and deck when gooseneck is lowered to ground.)	**1,000.00**	250	**1,000.00**	250
13 HP Honda engine package, self contained	**3,420.00**	420	**3,420.00**	420
Mechanical folding gooseneck (requires tractor winch) in lieu of hydraulic folding (lengthens trailer 4 1/2")	**(3,600.00)**	(750)	**(3,600.00)**	(750)
Platform (Deck)				
8'-6" (102") deck width	Std.	Std.	Std.	Std.
9'-0" (108") deck width	**2,585.00**	700	**2,775.00**	850
10'-0" (120") deck width	**4,325.00**	2,000	**4,325.00**	2,000
Extra deck length				
2'-0" (24'-0" deck length)	**1,450.00**	600	**1,595.00**	660
4'-0" (26'-0" deck length)	**2,900.00**	1,200	**3,190.00**	1,320
Apitong flooring	Std.	Std.	Std.	Std.
Outriggers, swing out brackets, set for 2" planks				
Platform length 22'	**1,890.00**	260	**1,890.00**	260
Platform length 24'	**1,985.00**	280	**1,985.00**	280
Platform length 26'	**2,085.00**	300	**2,085.00**	300
Additional lashing rings, each	**45.00**	5	**45.00**	5
Recessed lash rings , each	**90.00**	10	**90.00**	10
Wheel Well Area				
Wheel well covers, (over tires only/raises height 4")	**2,975.00**	900	**2,975.00**	900
1/8" Floor plate between mainbeams	**425.00**	150	**425.00**	150
1/4" Floor plate between mainbeams	**650.00**	390	**650.00**	390
36" Rear sloping afterdeck (beavertail)	**1,600.00**	910	**1,600.00**	1,010
48" Rear sloping afterdeck (beavertail)	**2,100.00**	1,070	**2,100.00**	1,170
Suspension				
Multi-leaf spring suspension	Std.	Std.	Std.	Std.
Spring/beam TR8600 (or equivalent)	**2,910.00**	350	N/A	N/A
Spring/beam TR8750 (or equivalent)	**3,675.00**	390	**3,675.00**	390
Air ride suspension (55" axle spacing) includes Etnyre manual raising and lowering of air suspension (short moves only, manual pin relocation required)	**5,400.00**	320	**5,400.00**	320
Air exhaust valve	**300.00**	10	**300.00**	10
Axles and Brakes				
Spring brakes - one (1) axle standard, per additional axle	**235.00**	30	**235.00**	30
Hubometer	**105.00**	10	**105.00**	10
Anti-Lock brakes (2S/2M System)	Std.	Std.	Std.	Std.
22,500# Capacity axles (5/8" wall)	Std.	Std.	Std.	Std.
25,000# Capacity axles (3/4" wall)	**235.00**	35	**235.00**	35
Tires and Wheels				
255/70 R. 22.5 (H) 16 PR Radials	Std.	Std.	Std.	Std.
8.25 x 22.5 Steel disc wheels	Std.	Std.	Std.	Std.

OPTIONAL FEATURES AND EQUIPMENT

	HFR40TD3 Drop Platform		HFR50TD3 Drop Platform	
	Price	**Wt. (Lbs.)**	**Price**	**Wt. (Lbs.)**
Electrical				
Additional side clearance lights (per pair)	**110.00**	5	**110.00**	5
Additional mid turn signals (per pair)	**95.00**	10	**95.00**	10
3rd Tail light package	**95.00**	10	**95.00**	10
LED (Light Emitting Diodes) lights	Std.	0	Std.	0
Paint				
Black paint	Std.	Std.	Std.	Std.
Yellow paint	N/C	0	N/C	0
Red finish	N/C	0	N/C	0
Paint, other than standard color enamel, color matched	**990.00**	0	**990.00**	0
(Does not include polyurethene, metallics and Imron finishes)				

E. D. ETNYRE & CO., Oregon, Illinois 61061-9778
1333 South Daysville Road • Phone 800/995-2116 or 815/732-2116 • Fax: 815/732-7400

Price Sheet No. C-DOL2-12R1 Effective January 15, 2012
Supersedes C-DOL2-12R

All prices exclusive of Federal Excise Tax, FOB Destination and subject to any other applicable taxes. All weights subject to a plus or minus of 5%.

JEEP DOLLIES
TANDEM AXLE
60 Ton

STANDARD FEATURES AND EQUIPMENT

Capacity: Proportionate share of up to 60 tons
Minimum trailer gooseneck clearance radius - 168"
50" Tractor loaded 5th wheel height
80" Gooseneck clearance radius
Telescopic drop legs
50" Sliding 5th wheel height (loaded)
66" Sliding 5th wheel
Ridewell air suspension
Over-ride chains on both axles
Manual exhaust valve for air suspension
8'-0" (96") wide
Tires - 255/70R 22.5 (H) 16 PR tubeless radials
Wheels - 8.25 x 22.5 single piece steel disc (white)

Hubs - Hub piloted with outboard drums
Axles - 22,500 # (5/8" wall thickness) with oil bearings
Brakes - 16 1/2" x 7" full air
Spring brakes - one (1) axle (rear axle)
Anti-Lock brakes - None
Automatic slack adjusters
Mast for cable and hoses
Jumper cable and hoses
Lighting - L.E.D. type - rubber mounted - mid turn signal
Finish - shot blast / epoxy primer / urethane finish
Air lines - glad hands
Electrical - 7 way receptacle and plug
Lash rings - 4 at balance point
Mud flaps
Red and white conspicuity markings

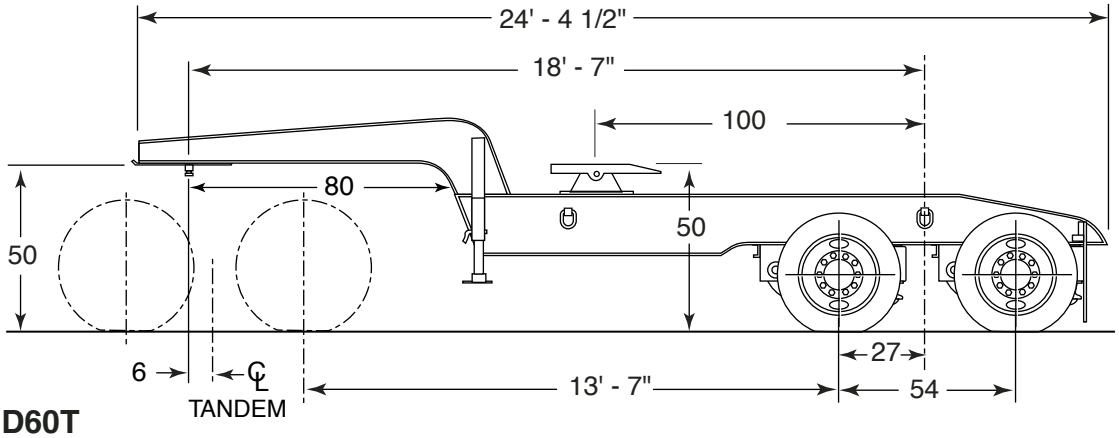

GHD60T

Model	Capacity	Inner Bridge	Axles	Tire Size	List Price	Wt. (Lbs.)
GHD60T	60 Tons (proportionate share)	13'-7"	2	255/70R 22.5 (H)	**$35,950.00**	7,680#

C-DOL

E. D. ETNYRE & CO., Oregon, Illinois 61061-9778
1333 South Daysville Road • Phone/732-2116 • Fax: 815/732-7400 •Telex: MCI 6505104321

Price Sheet No. C-DOL3-12R1 Effective January 15, 2012
Supersedes C-DOL3-12R

All prices exclusive of Federal Excise Tax, FOB Destination and subject to any other applicable taxes. All weights subject to a plus or minus of 5%.

JEEP DOLLIES
TRIPLE AXLE
75 Ton

STANDARD FEATURES AND EQUIPMENT

Capacity: Proportionate share of up to 75 tons
Minimum trailer gooseneck clearance radius - 216"
50" Tractor loaded 5th wheel height
80" Gooseneck clearance radius
Telescopic drop legs
50" Sliding 5th wheel height (loaded)
66" Sliding 5th wheel
Ridewell air suspension
Over-ride chains on three (3) axles
Manual exhaust valve for air suspension
8'-0" (96") wide
Tires - 255/70R 22.5 (H) 16 PR tubeless radials
Wheels - 8.25 x 22.5 single piece steel disc (white)

Hubs - Hub piloted with outboard drums
Axles - 22,500# (5/8" wall thickness) with oil bearings
Brakes - 16 1/2" x 7" full air
Spring brakes - one (1) axle (center axle)
Anti-Lock brakes - None
Automatic slack adjusters
Mast for cable and hoses
Jumper cable and hoses
Lighting - L.E.D. type - rubber mounted - mid turn signal
Finish - shot blast / epoxy primer / urethane finish
Air lines - glad hands
Electrical - 7 way receptacle and plug
Lash rings - 4 at balance point
Mud flaps
Red and white conspicuity markings

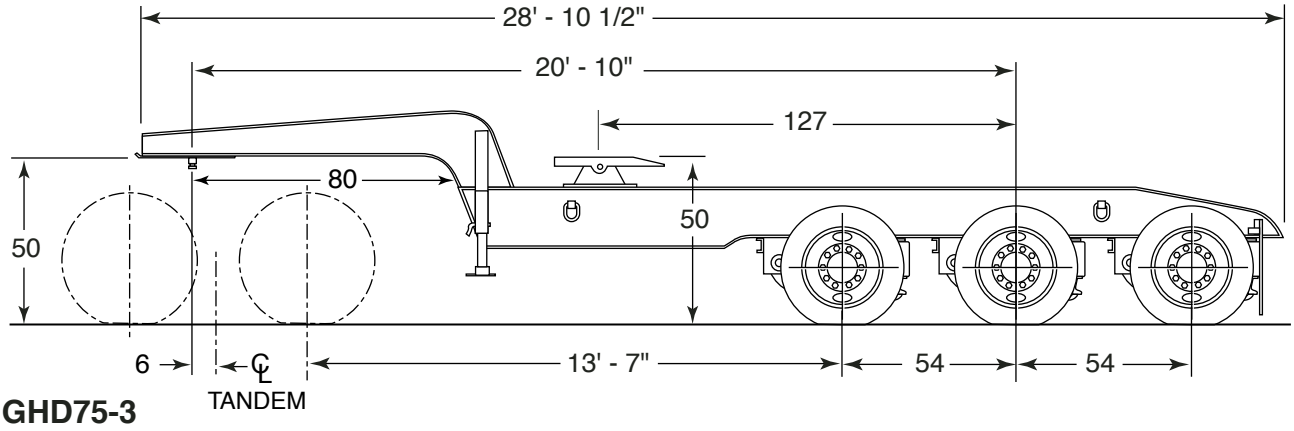

Model	Capacity	Inner Bridge	Axles	Tire Size	List Price	Wt. (Lbs.)
GHD75-3	75 Tons (proportionate share)	13'-7"	3	255/70R 22.5 (H)	**$48,800.00**	11,800#

OPTIONAL FEATURES AND EQUIPMENT

	GHD60T		GHD75T3	
	Price	**Wt. (Lbs.)**	**Price**	**Wt. (Lbs.)**
84" Gooseneck clearance radius	**$430.00**	150	**$540.00**	165
96" Gooseneck clearance radius	**530.00**	170	**660.00**	185
108" Gooseneck clearance radius	**690.00**	220	**800.00**	235
Additional king pin setting (removable)	**495.00**	160	**495.00**	160
Telescopic drop legs	Std.	Std.	Std.	Std.
Omit telescopic drop legs	**(300.00)**	(200)	**(300.00)**	(200)
2 Speed landing gear	**550.00**	130	**550.00**	130
Additional length (increase inner bridge) - requires longer trailer swing clearance				
0" to 6"	**430.00**	150	**540.00**	165
7" to 12"	**530.00**	170	**660.00**	185
13" to 18"	**690.00**	220	**810.00**	235
19" to 24"	**810.00**	270	**875.00**	295
25" to 30"	**1,150.00**	450	**1,310.00**	550
Air lift axle (first axle only)	N/A	N/A	**1,100.00**	300
Manual exhaust valve	std.	std.	std.	std.
8'-6" wide (102") (requires longer radius)	Consult Factory		Consult Factory	
Anti-Lock brakes (2S/2M system)	**710.00**	50	**710.00**	50
Anti-Lock brakes (2S/1M system)	**635.00**	45	**635.00**	45
Spring brakes - one (1) axle standard, per additional axle	**235.00**	30	**235.00**	30
Hubometer	**105.00**	10	**105.00**	10
Cast spoke wheels with 22.5 x 8.25 rims	**265.00**	30	**395.00**	45
Miscellaneous				
Black finish	Std.	Std.	Std.	Std.
Yellow finish	N/C	0	N/C	0
Red finish	N/C	0	N/C	0
Paint, other than standard color, color matched (does not include polyurethene, metallics or Imron finishes)	**990.00**	0	**990.00**	0
Lash rings, each	**45.00**	10	**45.00**	10
Electrical				
LED (Light Emitting Diodes) lights.	Std.	0	Std.	0

Truck Tractor Dimensions

Tandem Axle

Make _____

Model _____ **Tire Size** _____

NOTE: "L" is farthest point from center of fifth wheel (edge of tire, fender, corner of frame, etc.)

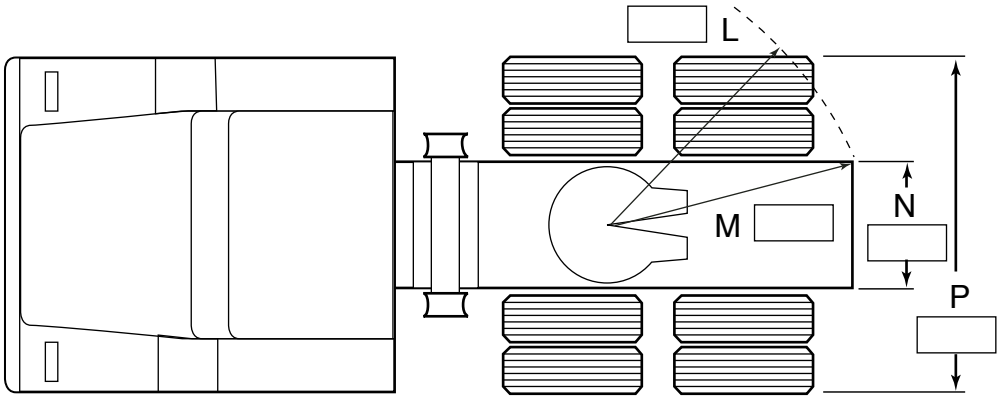

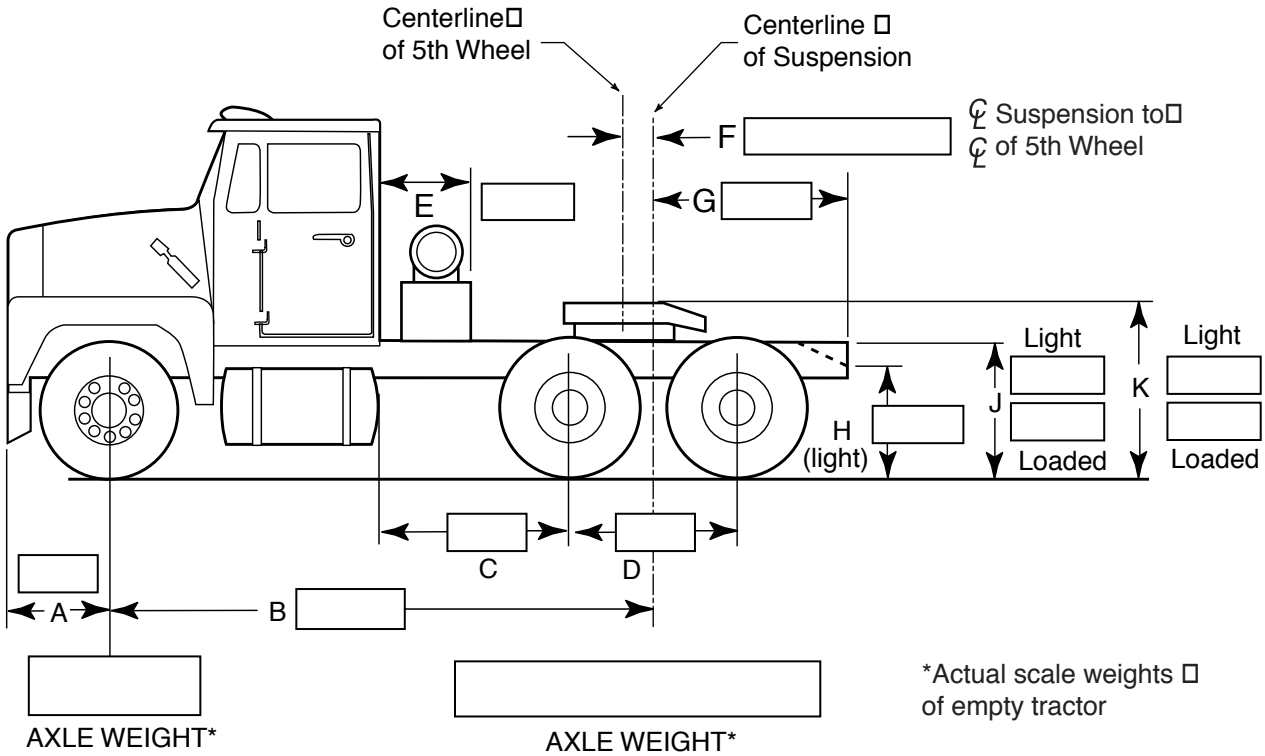

All dimension boxes must be filled in.
For weight distribution drawings, axle weights must be filled in.

E. D. ETNYRE & CO.
1333 South Daysville Road Oregon, Illinois 61061
Phone: 1-815/732-2116 Fax: 1-815-732-7400

Truck Tractor Dimensions

Tri Axle

Make _____

Model _____ **Tire Size** _____

NOTE: "L" is farthest point from center of fifth wheel (edge of tire, fender, corner of frame, etc.)

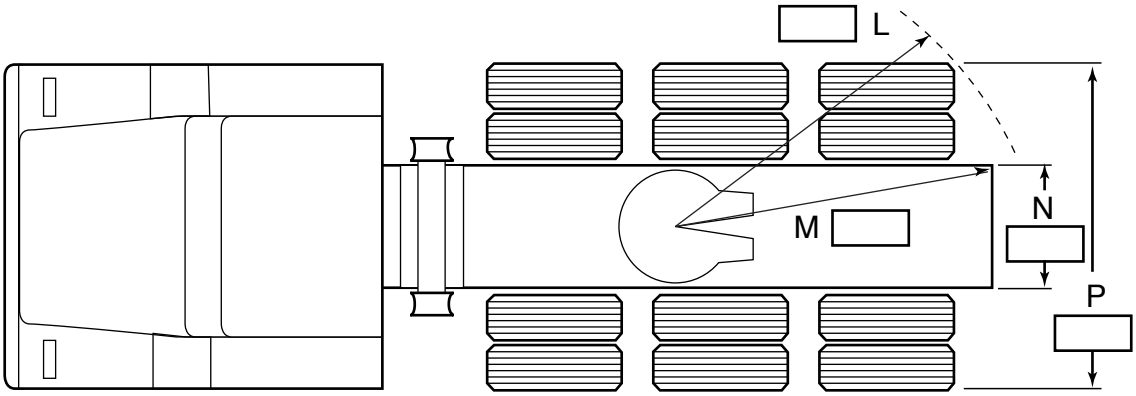

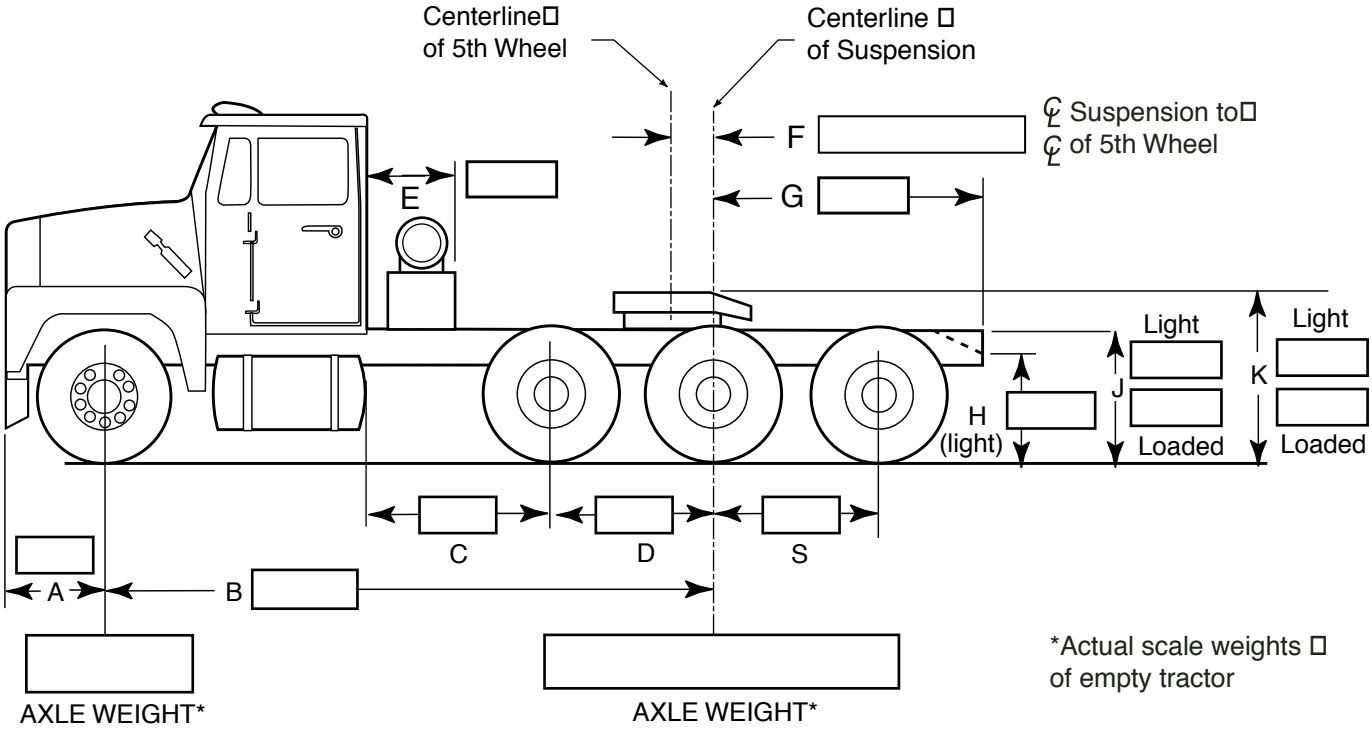

*Actual scale weights of empty tractor

All dimension boxes must be filled in.
For weight distribution drawings, axle weights must be filled in.

E. D. ETNYRE & CO.
1333 South Daysville Road Oregon, Illinois 61061
Phone: 1-815/732-2116 Fax: 1-815-732-7400

E. D. ETNYRE & CO.
1333 South Daysville Road
Oregon, Illinois 61061
Phone: 1-815/732-2116
Fax: 1-815-732-7400
Email: sales@etnyre.com
Web Site: www.etnyre.com

E. D. ETNYRE & CO., Oregon, Illinois 61061-9778
1333 South Daysville Road • Phone 815-732-2116
Fax: Main Office 815-732-4277, Sales & Service 815-732-7400
Web Site: www.etnyre.com • Email: sales@etnyre.com

ESTABLISHED 1898
INCORPORATED 1917

October 1, 2012

Mr. Stephen A. Hunter, Administrator
DAS – Office of State Purchasing
4200 Surface Road
Columbus, OH 43228

SUB: STS Contract

Dear Mr. Hunter:

E.D. Etnyre & Co. extends the following discount schedule from our published suggested list prices, for purposes of a state term schedule. These discount levels are adjustments from the previous levels submitted in 2003. Actual manufacturing costs, market conditions and price/cost structure adjustments make these changes necessary.

PRODUCT	DISCOUNT FROM LIST
DISTRIBUTORS	
Blacktopper – Centennial	9%
Etnyre Maintenance Distributor	9%
ASPHALT STORAGE TANKS	5%
CHIPSPREADERS	
Etnyre (2 Wheel Drive)	12%
Etnyre (4 Wheel Drive)	7%
STREET FLUSHERS / WATER SPRINKLERS	
Etnyre Street Flusher	8%
Etnyre Water Sprinkler	8%
REMOVABLE GOOSENECK LOWBED TRAILERS	
Etnyre Blackhawk Series	7%
REAR LOADING LOWBED TRAILERS	
Etnyre "R" Series	9%
Etnyre "SR" Series	9%
Etnyre "RPS" Series	9%
FALCON LIVE BOTTOM TRAILERS	5%

All prices include freight to customer.

Sincerely,

Donald R. Etnyre
V.P. Sales

Model Year:	2012		
Truck Make:	FREIGHTLINER	**Cab Style:**	CONVENTIONAL
Model:	M2 106V	**GVWR:**	33,000 LBS
WB:	189"	**CA:**	120"
Color:	WHITE ELITE	**Trim:**	GRAY
VIN:			

Alternator:	160 Amp
Axle-Front:	12,000 lbs.
Axle-Ratio:	3.90
Axle-Rear:	21,000 lbs.
Batteries:	Two 12-volt, 1850 CCA total
Brakes:	Air
Engine:	Cummins ISC diesel
Engine Rating:	260 H.P.
Engine Tach:	Electronic
Frame:	9/32"X3-7/16"X10-1/16"
Fuel Tank:	50 Gallon LH
Horn:	Single electric
Seat-Driver:	High back non suspension
Seat-Passenger:	High back, non-suspension, fixed
Shock Absorbers:	Front
Springs-Front:	12,000 lbs.
Springs-Rear:	21,000 lbs.
Springs-Rear Aux	Leaf spring helper
Steering:	Power
Tire Rim-Front:	8.25
Tire Rim-Rear:	8.25
Tires-Front:	11R22.5 14 ply GY G662 RSA
Tires-Rear:	11R22.5 14 ply GY G662 RSA
Trans-Main:	Eaton Fuller FR-9210B 10-speed manual
Wheels:	10-Hub pilot steel disc

Options Included Other than Summarized Above:

- 14" Two-plate dampened ceramic clutch
- Front P.T.O. adapter flange
- Front and rear brake dust shields
- 24" Integral front frame extension
- stationary bright finish grille
- Dual heated four-way adjustable mirrors
- LH & RH 8" bright finish convex mirrors
- Tinted glass
- Two cup holders LH & RH dash
- 2-1/2 Lb. fire extinguisher
- Air conditioning
- Heated air dryer
- AM/FM/WB radio
- Electronic cruise control
- Extended towing/roadside service warranty

OH STS Pricing per Specifications $64,696.00

Model Year:	2013		
Truck Make:	IHC	**Cab Style:**	CONVENTIONAL
Model:	7300	**GVWR:**	33,000 LBS
WB:	187"	**CA:**	120"
Color:	WINTER WHITE	**Trim:**	
VIN:			

Alternator:	120 Amp
Axle-Front:	12,000 lbs.
Axle-Ratio:	3.90
Axle-Rear:	21,000 lbs.
Batteries:	Two 12-volt, 1300 CCA total
Brakes:	Air
Engine:	IHC MaxxForce DT diesel
Engine Rating:	230 H.P.
Engine Tach:	Electronic
Frame:	10.125"X3.580"X0.312"
Fuel Tank:	50 Gallon RH
Horn:	Single electric/single air
Seat-Driver:	Gra-Mag non suspension high back
Seat-Passenger:	Gra-Mag non suspension high back
Shock Absorbers:	Front
Springs-Front:	12,000 lbs.
Springs-Rear:	23,500 lbs.
Springs-Rear Aux	4,500 lbs.
Steering:	Power
Tire Rim-Front:	8.25
Tire Rim-Rear:	8.25
Tires-Front:	11R22.5 14 ply
Tires-Rear:	11R22.5 14 ply
Trans-Main:	Fuller FR-9210B 10-speed manual
Wheels:	10-stud hub piloted steel disc

Options Included Other than Summarized Above:

- 14" single plate ceramic clutch
- Two front tow hooks
- Swept back steel front bumper
- 20" Integral front frame extension
- Front and rear brake dust shields
- Automatic drain valve w/heater
- Cigar lighter and ashtray
- AM/FM stereo radio
- Manual reset circuit breakers
- Stationary chrome grille
- Front P.T.O. effects
- Electronic cruise control
- Electronic throttle control
- Tinted glass
- Dual heated four-way adjustable mirrors
- Air conditioning
- Interior deluxe trim

OH STS Pricing per Speciications $66,185.00

E. D. ETNYRE & CO., Oregon, Illinois 61061-9783
1333 South Daysville Road • Phone 815/732-2116
Fax: Main Office 815-732-4277 • Sales & Service 815-732-7400
Web Site: www.etnyre.com • Email: sales@etnyre.com

ESTABLISHED 1898
INCORPORATED 1917

January 17, 2012

Terri Villavicencio
DAS-Office of Procurement Services
4200 Surface Road
Columbus, OH 43228

Subject: Addendum to Contract 7751500809

Terri:

E.D. Etnyre & Co. would like to add the following Trucks to the Contract 7751500809 for the sole purpose of mounting Centennial Model Distributors. Attached you will find all available Trucks along with Make, Model and Year of the trucks.

2013 International 7300	$66,185.00
2012 Freightliner M2106V	$64,696.00

This is a model update and these trucks replace the previous 2011 International 7300 and the 2011 Freightliner M2106V. These prices are in effect until further notice or depletion of the fleet.

The increase is 4.1% on the International and 0.96% on the Freightliner. The increase is the new model year increase. These increases come directly from our truck dealer and we have no control over the costs.

If you have any questions please feel free to contact me by phone at (815) 732-2116, Ext. 5127 or by e-mail at jwalls@etnyre.com.

Sincerely,

Donald R. Etnyre
E.D. Etnyre & Co.