Universal Wholegoods Pricing

Effective February 15, 2011

STATE OF OHIO
STATE TERM SCHEDULE
SCHEDULE NUMBER: 7751500508

© 2011 Alamo Group, Inc.

MEMBER OF THE ALAMO GROUP
ALWAYS ON THE CUTTING EDGE℠

Ohio State Contract # STS515-7751500508

Effective Dates: 08/01/2007-08/31/2012

Renewal Term: 09/01/2012 – 08/31/2013

2012- Contract Discount Structure

All Mowing Products	19%
Flex Rotary Mowers	29%
Versa Pro Mowers	22.6%
Special Purpose- Grass King Mowers	22.6%
TRAXX RF Remote-Control Mower	0%
(Price sheet at Net Cost)	
Parts	19%

Alamo Industrial
1-800-882-5762

SWITCHBLADE

Sickle Bar Mower

STANDARD SPECIFICATIONS

- Full Hydraulic Drive of Cutter Knife
- Hydraulically Actuated Breakaway
- Hydraulic Lift and Tilt
- Knife Speed Governor
- 3" Heavy Duty Industrial Rock Guards
- Reversible Hydraulic Motor
- Safety Transport Locks
- Self-Contained Hydraulics
- Cutting Capacity: 1/2" diameter material
- Tractor Req: Min. 3,000 lbs. and a 25 HP rating

PRODUCT ORDER CODE	DESCRIPTION	APPRX. WEIGHT		LIST PRICE
	SWITCHBLADE BASE UNIT *(One Choice Required)*			
04116007	5' Switchblade Single RH w/Serrated Knives	709		11,474
04117207	6' Switchblade Single RH w/Serrated Knives	723		11,710
	MOUNT KIT *(One Choice Required)* *See Mount Kit Page for Descriptions and Part Numbers*			
	OPTIONS			
02974374	Additional Operators and Parts Manuals (Hard Copy)			45
02986457	Additional Operators, Parts & Service Manuals (CD Format)			45
0800000	Factory Mount			1,888
0487100	Knife Holder Brackets (Order Quantity 2 per Unit)	9		116
02977682	Case-IH JX-C Series Pump Guard Kit			285
02982781	Case-IH JX-U Series Pump Guard Kit			285
02983392	John Deere 5105/5205 Pump Guard Kit			285
02985461	John Deere 5220/5320 Pump Guard Kit			285
02983480	John Deere 5225/5325 Pump Guard Kit			285
02977682	New Holland TN-A Series (3 Cyld Only) Pump Guard Kit			285
02982781	New Holland TL-A Series Pump Guard Kit			285
0800700	Special Mower Paint			195
00889899	Additional 12 Month Warranty			2,038

SWITCHBLADE
MOUNT KIT OPTIONS

SUBFRAME KIT	HYDRAULIC KIT	DESCRIPTION	MAX. TIRE SIZE FRONT	MAX. TIRE SIZE REAR	LIST PRICE
		SWITCHBLADE SINGLE WING MOUNT			
02980118	02980119	Case-IH JX1060C/1070C/1075C Cab/2&4wd	11.2-24	16.9-30	3,672
02982965	02982966	Case-IH JX55/65 Rops 2wd	10.00-16	16.9-30	3,672
02982821	02982819	Case-IH JX1080U/1090U/1100U ROPS/2&4wd	11.2-24	16.9-30	3,672
02982774	02982768	Case-IH JX1080U/1090U/1100U Cab/2&4wd	11.2-24	16.9-30	3,672
02983241	02983239	John Deere 5105/5205 ROPS/2&4wd	9.5-24	14.9-28	3,672
02975240	02979841	John Deere 5220/5320 ROPS/2wd (Straddle Platform)	7.50-16	16.9-30	3,672
02977928	02982282	John Deere 5220/5320 Cab/2wd	7.50-16	16.9-30	3,672
02983098	02983099	John Deere 5225/5325 ROPS/2&4wd	9.5-24	16.9-30	3,672
02983098	02983101	John Deere 5225/5325 Cab/2&4wd	9.5-24	16.9-30	3,672
02982523	02982524	John Deere 5425/5525 ROPS/2&4wd (IOOS Platform)	11.2-24	16.9-30	3,672
02982523	02983229	John Deere 5425/5525 Cab/2&4wd	11.2-24	16.9-30	3,672
02983935	02983936	John Deere 5425/5525 Cab/2&4wd w/JD Loader	11.2-24	16.9-30	3,672
02977320	02977321	New Holland TN60A/70A/75A ROPS/2&4wd	11.2-24	16.9-28	3,672
02980118	02980119	New Holland TN60DA/70DA/75DA Cab/2&4wd	11.2-24	16.9-30	3,672
02984694	02984695	New Holland TN85A/95A ROPS/2&4wd	11.2-24	16.9-30	3,672
02982821	02982819	New Holland TL80A/90A/100A ROPS/2&4wd	11.2-24	16.9-30	3,672
02982774	02982768	New Holland TL80A/90A/100A Cab/2&4wd	11.2-24	16.9-30	3,672

OTHER SPECIFICATIONS

1) Tractors should not be ordered with mid-mount loader valves as they may interfere with the subframe structure.
2) New Holland TL-A models require a smaller replacement battery. We recommend Exide #34R-84N (Alamo #02982767).
3) The John Deere 5105/5205 will require a modification to the front bolster for proper driveline clearance.

74" SUPER HEAVY DUTY

Flail Mower

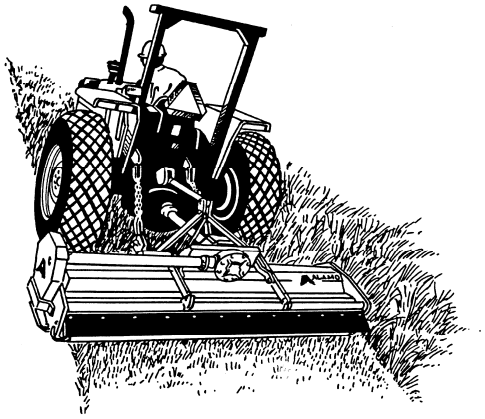

STANDARD SPECIFICATIONS

- 74" Cutting Width
- 5/16" Side Plates
- CAT I or CAT II Three-Point Hitch
- 4-1/2" x 5/16" Wall Cuttershaft
- 1-15/16" Bore Greaseable, Self Aligning Cuttershaft Bearings
- 60 HP Gearbox
- CAT 4 Driveline
- Belt Drive from Gearbox to Cuttershaft with Automatic Spring Tension
- 6" Adjustable Rear Roller
- 1/2" - 6" Cutting Height
- Available in Fine or Coarse-Cut
- Front & Rear Deflectors
- Factory Set-Up
- Cutting Capacity: 1" diameter material
- Tractor Req: Min 35 HP

PRODUCT ORDER CODE	DESCRIPTION	APPRX. WEIGHT		LIST PRICE
	74" SHD FLAIL BASE UNIT *(One Choice Required)*			
SH741	74" SHD, Center Mount	930		6,408
SH742	74" SHD, Offset (8" Right)	930		6,408
SH743	74" SHD, Offset (14" Right)	930		6,408
SH744	74" SHD, Center Mount with Caster Brackets	974		6,918
SH745	74" SHD, Offset (8" Right) w/ Caster Brackets	974		6,918
SH746	74" SHD, Offset (14" Right) w/Caster Brackets	974		6,918
	KNIVES *(One Choice Required)*			
01	Coarse-Cut (3 oz.)			N/C
02	Coarse-Cut (4 oz.)			187
03	Fine-Cut			N/C
	CASTERS *(One Choice Required)*			
01	Roller Only			N/C
702193	360° Laminated Caster Wheel w/ Roller	154		1,495
702192	360° Pneumatic Caster Wheel w/ Roller	86		1,241
	OPTIONS			
00889899	Additional 12 Month Warranty			1,794
803211	Additional Operators and Parts Manual			45
801002	Special Mower Paint			252
701150	Lift Chain	7		92
00888990	Set-up fee			600

88" SUPER HEAVY DUTY

Flail Mower

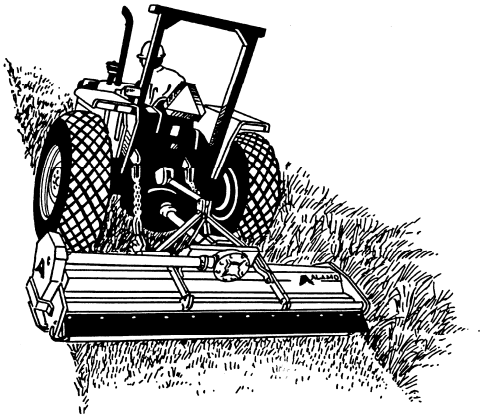

STANDARD SPECIFICATIONS

- 88" Cutting Width
- 10-Gauge Unitized Cutter Housing
- 5/16" Side Plates
- CAT I or CAT II Three-Point Hitch
- 4-1/2" x 5/16" Wall Cuttershaft
- 1-15/16" Bore Greaseable, Self Aligning Cuttershaft Bearings
- 60 HP Gearbox
- CAT 4 Driveline
- Belt Drive from Gearbox to Cuttershaft with Automatic Spring Tension
- 6" Adjustable Rear Roller
- 1/2" - 6" Cutting Height
- Available in Fine or Coarse-Cut
- Torque Limiter Clutch
- Front & Rear Deflectors
- Factory Set-Up
- Cutting Capacity: 1" diameter material
- Tractor Req: Min 40 HP

PRODUCT ORDER CODE	DESCRIPTION	APPRX. WEIGHT		LIST PRICE
	88" SHD FLAIL BASE UNIT *(One Choice Required)*			
SH881	88" SHD, Center Mount	1035		6,499
SH882	88" SHD, Offset (8.5" Right)	1035		6,499
SH883	88" SHD, Offset (14.5" Right)	1035		6,499
SH884	88" SHD, Offset (20.5" Right)	1035		6,499
SH885	88" SHD, Offset (26.5" Right)	1035		6,499
SH886	88" SHD, Center Mount with Caster Brackets	1069		7,234
SH887	88" SHD, Offset (8.5" Right) w/ Caster Brackets	1069		7,234
SH888	88" SHD, Offset (14.5" Right) w/Caster Brackets	1069		7,234
SH889	88" SHD, Offset (20.5" Right) w/ Caster Brackets	1069		7,234
SH880	88" SHD, Offset (26.5" Right) w/ Caster Brackets	1069		7,234
	KNIVES *(One Choice Required)*			
01	Coarse-Cut (3 oz.)			N/C
02	Coarse-Cut (4 oz.)			223
03	Fine-Cut			N/C
	CASTERS *(One Choice Required)*			
01	Roller Only			N/C
702193	360° Laminated Caster Wheel w/ Roller	154		1,495
702192	360° Pneumatic Caster Wheel w/ Roller	86		1,241
	OPTIONS			
00889899	Additional 12 Month Warranty			1,794
803211	Additional Operators and Parts Manual			45
801002	Special Mower Paint			562
701150	Lift Chain	7		92
00888990	Set-up fee			600

ALAMO INDUSTRIAL
Wholegoods Department
(800) 882-5762

96" SUPER HEAVY DUTY

Flail Mower

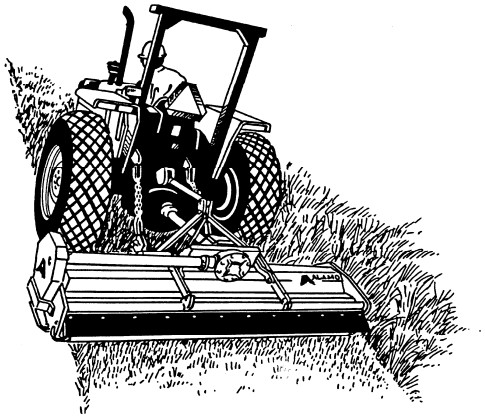

STANDARD SPECIFICATIONS

- 96" Cutting Width
- 10-Gauge Unitized Cutter Housing
- 5/16" Side Plates
- CAT I or CAT II Three-Point Hitch
- 4-1/2" x 5/16" Wall Cuttershaft
- 1-15/16" Bore Greaseable, Self Aligning Cuttershaft Bearings
- 60 HP Gearbox
- CAT 4 Driveline
- Belt Drive from Gearbox to Cuttershaft with Automatic Spring Tension
- 6" Adjustable Rear Roller
- 1/2" - 6" Cutting Height
- Available in Fine or Coarse-Cut
- Torque Limiter Clutch
- Front & Rear Deflectors
- Factory Set-Up
- Cutting Capacity: 1" diameter material
- Tractor Req: Min 50 HP

PRODUCT ORDER CODE	DESCRIPTION	APPRX. WEIGHT		LIST PRICE
	96" SHD FLAIL BASE UNIT *(One Choice Required)*			
SH961	96" SHD, Center Mount	1170		7,237
SH962	96" SHD, Offset (12.5" Right)	1170		7,237
SH963	96" SHD, Offset (18.5" Right)	1170		7,237
SH964	96" SHD, Offset (24.5" Right)	1170		7,237
SH965	96" SHD, Offset (30.5" Right)	1170		7,237
SH966	96" SHD, Center Mount with Caster Brackets	1249		7,726
SH967	96" SHD, Offset (12.5" Right) w/ Caster Brackets	1249		7,726
SH968	96" SHD, Offset (18.5" Right) w/Caster Brackets	1249		7,726
SH969	96" SHD, Offset (24.5" Right) w/ Caster Brackets	1249		7,726
SH960	96" SHD, Offset (30.5" Right) w/ Caster Brackets	1249		7,726
	KNIVES *(One Choice Required)*			
01	Coarse-Cut (3 oz.)			N/C
02	Coarse-Cut (4 oz.)			244
03	Fine-Cut			N/C
	CASTERS *(One Choice Required)*			
01	Roller Only			N/C
702193	360° Laminated Caster Wheel w/ Roller	154		1,495
702192	360° Pneumatic Caster Wheel w/ Roller	86		1,241
	OPTIONS			
00889899	Additional 12 Month Warranty			1,794
803211	Additional Operators and Parts Manual			45
801002	Special Mower Paint			613
701150	Lift Chain	7		92
00888990	Set-up fee			600

ALAMO INDUSTRIAL
Wholegoods Department
(800) 882-5762

RX60

Rotary Mower

STANDARD SPECIFICATIONS

- 60" Cutting Width
- 540 PTO
- CAT I Three-Point Hitch
- Pan Blade Carrier
- Slip Clutch Protection
- 10-Gauge Rolled Top Deck
- 1/4" x 9" Side Skirts
- Continuous Weld Deck to Skirt Seam
- 110 HP Gearbox
- CAT 4 Shielded Drivelines
- Updraft Blades
- 360° Swivel Tailwheel
- Rated For 2" Brush
- Front & Rear Double Chainguards

PRODUCT ORDER CODE	DESCRIPTION	APPRX. WEIGHT		LIST PRICE
	SOME ASSEMBLY IS REQUIRED			
	RX60 BASE UNIT			
RX020160	RX60 (Round Pan w/Double Chain Guards)	1069		4,213
	OPTIONS			
8B208	Additional Operators Manual			46
00889899	Additional 12 Month Warranty			1,683
3570	Check Chains (CAT I)	8		196
02791800	RX60 Special Paint			427
00888990	Set-up fee			600

Wholegoods Department
(800) 882-5762

RX72

Rotary Mower

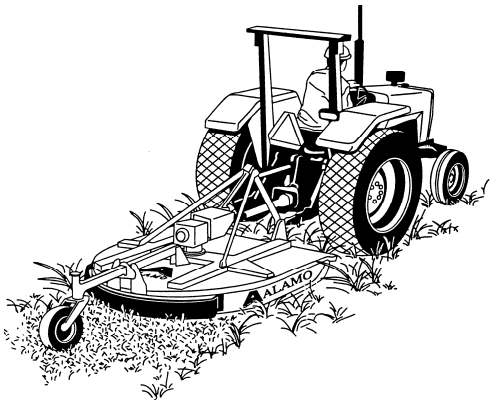

STANDARD SPECIFICATIONS

- 72" Cutting Width
- 540 PTO
- CAT II Three-Point Hitch
- Pan Blade Carrier
- Slip Clutch Protection
- 10-Gauge Rolled Top Deck
- 1/4" x 9" Side Skirts
- Continuous Weld Deck to Skirt Seam
- 110 HP Gearbox
- CAT 4 Shielded Drivelines
- Updraft Blades
- 360° Swivel Tailwheel
- Rated For 2" Brush
- Front & Rear Double Chainguards

PRODUCT ORDER CODE	DESCRIPTION	APPRX. WEIGHT		LIST PRICE
	SOME ASSEMBLY IS REQUIRED			
	RX72 BASE UNIT			
RX020172	RX72 (Round Pan w/Double Chain Guards)	1252		4,638
	OPTIONS			
8B208	Additional Operators Manual			46
00889899	Additional 12 Month Warranty			1,683
3570	Check Chains (CAT I)	8		196
02791800	RX72 Special Paint			512
00888990	Set-up fee			600

Wholegoods Department
(800) 882-5762

RX72HD

Heavy Duty Rotary Mower

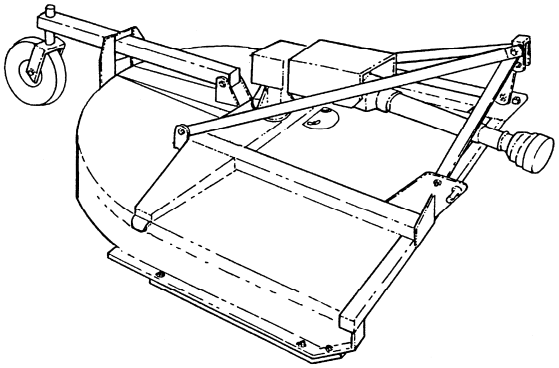

STANDARD SPECIFICATIONS

- 72" Cutting Width
- 540 PTO
- CAT I or II Three-Point Hitch
- Pan Blade Carrier
- Slip Clutch Protection
- 7-gauge top deck
- Continuous Weld Deck to Skirt Seam
- 130 HP Gearbox
- CAT 5 Shielded Drivelines
- 360° Swivel Tailwheel
- Rated For 4" Brush
- Front & Rear Double Chainguards
- Tractor PTO HP Required - 40

PRODUCT ORDER CODE	DESCRIPTION	APPRX. WEIGHT		LIST PRICE
	SOME ASSEMBLY IS REQUIRED			
	RX72HD BASE UNIT			
RXHD1072	RX72HD 540 Lift-Type w/Double Chain Gds	1275		5,870
	OPTIONS			
8B209	Additional Operators Manual			45
00889899	Additional 12 Month Warranty			1,683
TBA	Check Chains	TBA		TBA
02791800	Special Paint			513
00888990	Set-up fee			600

Wholegoods Department
(800) 882-5762

RX84

Lift-Type Rotary Mower

STANDARD SPECIFICATIONS

- 84" Cutting Width
- 540 PTO
- CAT II/CAT III Quick Hitch
- Pan Blade Carriers
- Slip Clutch Protection
- 10-Gauge Top Deck
- 1/4" x 11" Side Skirts
- Updraft Blades
- Cuts up to 2 1/2" Brush
- CAT 4 Shielded Driveline
- Replaceable Skid Shoes
- Front & Rear Double Chainguards
- 130 HP Gearbox

PRODUCT ORDER CODE	DESCRIPTION	APPRX. WEIGHT		LIST PRICE
	RX84 LIFT-TYPE BASE UNIT			
RX000184	RX84 540 PTO Lift-Type, Single Tailwheels & Double Chain Guards	1,381		5,064
RX000284	RX84 540 PTO Lift-Type, Dual Tailwheels & Double Chain Guards	1,479		5,451
	OPTIONS			
8B208	RX84 Additional Operators Manual			45
00889899	Additional 12 Month Warranty			1,683
3571M	Check Chains (CAT II)	8		421
02791800	RX84 Special Paint			583
00888990	Set-up fee			600

RX84

Pull-Type Rotary Mower

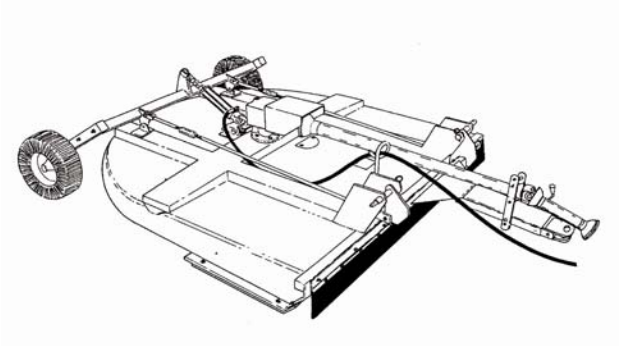

STANDARD SPECIFICATIONS

- 84" Cutting Width
- 540 PTO
- Pull-Type
- Pan Blade Carriers
- 10-Gauge Top Deck
- 1/4" x 11" Side Skirts
- Updraft Blades
- CAT 4 Shielded Driveline
- Slip Clutch Protection
- Replaceable Skid Shoes
- Front & Rear Double Chainguards
- Parking Jack
- Safety Tow Chain
- 130 HP Gearbox

PRODUCT ORDER CODE	DESCRIPTION	APPRX. WEIGHT		LIST PRICE
	RX84 PULL-TYPE BASE UNIT *(Less Wheels)*			
RX011184	RX84 540 PTO Pull-Type w/Dbl Chain Guards, Hyd Cyld & Hose Kit	1238		6,787
	WHEEL & TIRE OPTIONS *(One Choice Required)*			
00770519	Two Laminated Tires & Wheels	150		418
00770544	Two Used Airplane Tires & Wheels	156		496
00770524	Two 15" Wheels (Wheels Only)	36		108
00770529	Two Implement Tires & Wheels	80		418
	OPTIONS			
8B208	RX84 Additional Operators Manual			45
00889899	Additional 12 Month Warranty			1,683
00778158	Spring Shock Absorber	25		712
00755234	Stroke Control	1		40
02791800	RX84 Special Paint	0		583
00888990	Set-up fee			600

RX96

Lift-Type Rotary Mower

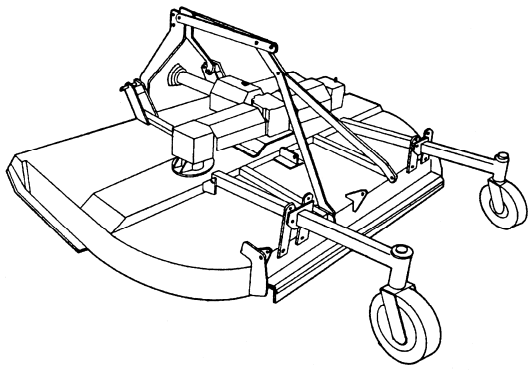

STANDARD SPECIFICATIONS

- 96" Cutting Width
- 540 or 1000 PTO
- CAT II Three-Point Hitch
- Pan Blade Carriers
- Slip Clutch Protection
- 10-Gauge Top Deck
- 1/4" x 9" Side Skirts
- Updraft Blades
- 4" Blade Overlap
- CAT 4 Shielded Driveline
- Front & Rear Double Chainguards
- Replaceable Skid Shoes
- 120 HP Center Power Divider - 110 HP Gearboxes

PRODUCT ORDER CODE	DESCRIPTION	APPRX. WEIGHT		LIST PRICE
	RX96 LIFT-TYPE BASE UNIT			
04200096	RX96 540 PTO Lift-Type, Dual Tailwheel & Double Chain Guards	2024		7,866
	OPTIONS			
8B184	RX96 Additional Operators Manual			45
00889899	Additional 12 Month Warranty			1,683
00763420	Offset Adapter Kit (15 3/4 in Offset)	240		2,727
3571M	Check Chains (CAT II)	8		421
02791800	RX96 Special Paint			683
00888990	Set-up fee			600

RX96

Pull-Type Rotary Mower

STANDARD SPECIFICATIONS

- 96" Cutting Width
- 540 or 1000 PTO
- Pull-Type
- Pan Blade Carriers
- 10-Gauge Top Deck
- 1/4" x 9" Side Skirts
- Updraft Blades
- 4" Blade Overlap
- CAT 4 Shielded Driveline
- Slip Clutch Protection
- Replaceable Skid Shoes
- Front & Rear Double Chainguards
- Parking Jack
- Safety Tow Chain
- 120 HP Center Power Divider - 110HP Gearboxes

PRODUCT ORDER CODE	DESCRIPTION	APPRX. WEIGHT		LIST PRICE
	RX96 PULL-TYPE BASE UNIT *(Less Wheels)*			
04300096	RX96 540 PTO Pull-Type w/Double Chain Guards	2439		8,994
	LIFTING OPTIONS *(One Choice Required)*			
00554600	Ratchet Lift Screw	15		112
3615	Hydraulic Cylinder & Hose Kit	36		314
	WHEEL & TIRE OPTIONS *(One Choice Required)*			
00770519	Two Laminated Tires & Wheels	150		418
00770544	Two Used Airplane Tires & Wheels	156		496
00770524	Two 15" Wheels (Wheels Only)	36		108
00770529	Two Implement Tires & Wheels	80		418
	OPTIONS			
8B184	RX96 Additional Operators Manual			45
00889899	Additional 12 Month Warranty			1,683
00778158	Spring Shock Absorber	25		712
00755234	Stroke Control	1		40
02791800	RX96 Special Paint			683
00888990	Set-up fee			600

10' EAGLE

Flex-Wing Rotary Mower

Standard Specifications

- Cutting Width: 126"
- Overall Width: 133"
- Overall Length: 183"
- Transport Width: 88"
- Cutting Height Range: 1-1/2" Min. to 14-1/2" Max
- Self-Leveling Height Adjustment: Hydraulic Cylinder
- Jack Stand: Standard
- Hitch: 3-pt. Hitch, pull
- Blade Carrier: Reinforced Pan

Blades: 1/2" x 4" or 5/8" x 4"; Updraft

Blade Overlap: 6"

- Required Horsepower: 50
- Gearbox Rating: * *(Ratings based on actual field performance)*

Power Divider - 235 HP

Center & Wing - 205 HP

- Wing Flex Degrees: 90 up, 22 down
- Safety Tow Chain: Standard
- Weight: Approximately 3,850 lbs.
- Output Shaft Diameter: 2-3/8"
- Blade Tip Speed:

Center 540 RPM 16,286 FPM

Wing 540 RPM 16,415 FPM

- Cutting Capacity: 3-1/2"
- Driveline Size: Main - Cat 5

Constant Velocity

Wing - Cat 4 or 5

- Driveline Protection: Slip Clutch
- Deck Thickness: 7 gauge
- Side Skirt: 1/4" x 10-1/2"
- Tires & Wheel: Foam-filled used airplane
- Wing Lift Hydraulics: Standard
- Double Chainguards
- Mower Warranty: One year limited
- Gearbox Warranty: 5 year limited

PRODUCT ORDER CODE	RPM	Main Driveline	Wing Driveline	Safety Guards	Tires	Deck Rings	Appx Wt.	LIST PRICE
04052010	540	Cat 5-Constant Velocity	Cat 5	Double Chainguards	5 Foam Filled Airplane	No	3,850	19,342
04052110	540	Cat 5-Constant Velocity	Cat 5	Double Chainguards	5 Foam Filled Airplane	Yes	3,850	19,592
	OPTIONS							
00380200	Open Center Three-Spool Valve						40	619
00759833	Closed Center Three Spool Valve						40	604
00759684	Valve Mtg. Kit (Hoses, Shields, Ftgs.)						20	455
00780570	Winch & Stand						34	765
00769178	Ball Hitch (2-5/16" Ball)						50	504
00773869	Pintle Hitch Kit (Requires Tractor Drawbar Modification)						50	944
00774802	Auxiliary Spindle Kit for Dual Wheels On Wing (Requires 1 Additional Tire and Wheel)						24	433
00779389	Heavy Duty Updraft Blades (10' Eagle Only)						100	299
02791800	Special Paint (Call before quoting)							959
00889899	Additional 12 Month Warranty							2880
00780567C	Additional Operators Manual							45
00780567P	Additional Parts Manual							n/c
00888190	Set-up Fee							750

PRICING CONTINUED ON NEXT PAGE

10' EAGLE

Flex-Wing Rotary Mower -*Pricing Continued*

WHEEL & TIRE OPTIONS (SELECT FROM ONE GROUP OF TIRES) (5 OR 6 REQUIRED		Appx Wt.	LIST PRICE EACH
00008700	15" Wheel	18 each	54
00025200	Laminated Tire & Wheel	75 each	209
00749698	Implement Tire & Wheel	40 each	209
00771461	Used Airplane Tire & Wheel	78 each	248
00766911	Foam-Filled Used Airplane Tire & Wheel - Standard	75 each	278
	SHIPPING CONFIGURATION		
00888802	Fully Assembled		N/C
00888703	Unassembled, Shipped in Bundles		N/C

15' EAGLE

Flex-Wing Rotary Mower

Standard Specifications

- Cutting Width: 180"
- Overall Width: 186"
- Overall Length: 183"
- Transport Width: 96"
- Cutting Height Range: 1-1/2" Min. to 14-1/2" Max
- Self-Leveling Height Adjustment: Hydraulic Cylinder
- Jack Stand: Standard
- Hitch: 3-pt. Hitch, pull
- Blade Carrier: Reinforced Pan
- Blades: 1/2" x 4" or 5/8" x 4"; Updraft
- Blade Overlap: 6"
- Required Horsepower: 50
- Gearbox Rating: * *(Ratings based on actual field performance)*

  Power Divider - 235 HP

  Center & Wing - 205 HP
- Wing Flex Degrees: 90 up, 22 down
- Safety Tow Chain: Standard
- Weight: Approximately 5,435 lbs.
- Output Shaft Diameter: 2-3/8"
- Blade Tip Speed:

  Center 540 RPM 16,286 FPM

  1000 RPM 16,380 FPM

  Wing 540 RPM 16,415 FPM

  1000 RPM 17,137 FPM
- Cutting Capacity: 3-1/2"
- Driveline Size: Main - Cat 5

  Constant Velocity

  Wing - Cat 5
- Driveline Protection: Slip Clutch
- Deck Thickness: 7 gauge
- Side Skirt: 1/4" x 10-1/2"
- Tires & Wheel: Foam-filled used airplane
- Wing Lift Hydraulics: Standard
- Double Chainguards
- Mower Warranty: One year limited
- Gearbox Warranty: 5 year limited

PRODUCT ORDER CODE	RPM	Main Driveline	Wing Driveline	Safety Guards	Tires	Deck Rings	Appx Wt.	LIST PRICE
04052015	540	Cat 5-Constant Velocity	Cat 5	Double Chainguards	6 Foam Filled Airplane	No	5,435	22295
04052115	540	Cat 5-Constant Velocity	Cat 5	Double Chainguards	6 Foam Filled Airplane	Yes	5,435	22614
	OPTIONS							
00380200	Open Center Three-Spool Valve						40	619
00759833	Closed Center Three Spool Valve						40	604
00759684	Valve Mtg. Kit (Hoses, Shields, Ftgs.)						20	455
00780570	Winch & Stand						34	765
00769178	Ball Hitch (2-5/16" Ball)						50	504
00773869	Pintle Hitch Kit (Requires Tractor Drawbar Modification)						50	944
00774803	Auxiliary Spindle Kit for Dual Wheels On Wing (Requires 2 Additional Tires and Wheels)						45	433
00779383	Heavy Duty Updraft Blades (15' Eagle Only)						100	386
02791800	Special Paint (Call before quoting)							959
00889899	Additional 12 Month Warranty							2880
00780567C	Additional Operators Manual							45
00780567P	Additional Parts Manual							n/c
00888190	Set-up Fee							750

PRICING CONTINUED ON NEXT PAGE

15' EAGLE

Flex-Wing Rotary Mower - *Pricing Continued*

WHEEL & TIRE OPTIONS (SELECT FROM ONE GROUP OF TIRES) (6 OR 8 REQUIRED)		Appx Wt.	LIST PRICE EACH
00008700	15" Wheel	18 each	54
00025200	Laminated Tire & Wheel	75 each	209
00749698	Implement Tire & Wheel	40 each	209
00771461	Used Airplane Tire & Wheel	78 each	248
00766911	Foam-Filled Used Airplane Tire & Wheel - Standard	75 each	278
	SHIPPING CONFIGURATION		
00888802	Fully Assembled		N/C
00888703	Unassembled, Shipped in Bundles		N/C

EXTEN-A-KUT II

Rear-Mount Offset Rotary Mower

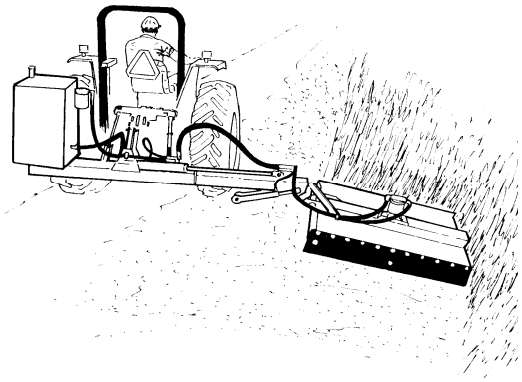

STANDARD SPECIFICATIONS

- 60" Cutting Width
- CAT II Three-Point Hitch
- 60-Gallon Hydraulic Reservoir
- 12'6" Maximum Reach from Right Side of Tractor
- 180° Head Tilt
- 79 HP Hydraulic Pump Attached to a Speed Increaser
- 10-Gauge Deck with Boxed Channel Frame
- 81 HP Hydraulic Motor Directly Splined to Spindle
- 2" Spindle in a Unibody Cast Housing
- Bar Blade Carrier
- 1/2" x 4" Updraft Blades
- Front & Rear Double Chainguards

PRODUCT ORDER CODE	DESCRIPTION	APPRX. WEIGHT		LIST PRICE
	EXTEN-A-KUT II BASE UNIT *(One Choice Required)*			
04700014	Exten-A-Kut II, 540 PTO, Bar Blade Carrier	1620		12,767
04700011	Exten-A-Kut II, 540 PTO, Pan Blade Carrier	1650		12,958
	FRONT GUARD *(One Choice Required)*			
00775779	Front Double Chain Guard	58		718
	REAR GUARD *(One Choice Required)*			
00775779	Rear Double Chain Guard	58		718
	OPTIONS			
00889899	Additional 12 Month Warranty			1,683
02969111	Additional Operators and Parts Manual			45
02281000	Valve Kit (Open Center)	40		730
02281001	Valve Kit (Closed Center)	40		827
02958990	Valve Mount Kit (Fender Mounted)	6		77
00777523	Tail Wheel Kit (Ser.#011804 & Up)	72		754
02964902	Cable & Clamp Kit	12		21
02791800	Special Paint			387
00888990	Set-up fee			600

GRASS KING

62" & 74" Offset Flail Mowers

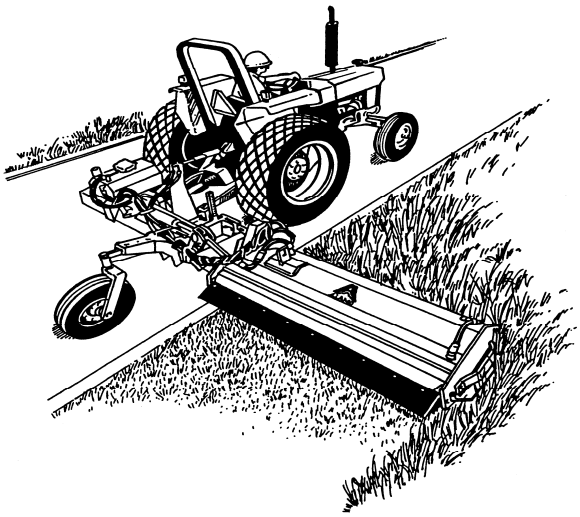

STANDARD SPECIFICATIONS

- 6"x8"x3/16" Welded Rectangular Tube Frame
- 360 degree Rotating Rear Caster Wheel
- CAT I or CAT II Three-Point Hitch
- 50 to 90 Horsepower Tractor Required
- Hydraulic Piston Pump Rated @ 4000 PSI
- CAT 4 Driveline
- 1 to 4 Speed Increaser
- 14 Gallon Hydraulic Reservoir
- 12 Micron Filtration System
- 10 Gauge Unitized Cutter Housing
- 62" or 74" Cutting Widths
- 1/2" Inboard & 5/16" Outboard End Plates
- Replaceable Skid Shoes
  - 4-1/2"x5/16" Bore, Greasable, Self-Aligning Cuttershaft Bearings
- 74 HP Motor
  - Belt Drive from Motor to Cuttershaft with Automatic Spring Tension
- 6" Adjustable Rear Roller
- 1/2" - 6" Cutting Height
- Available in Fine or Coarse-Cut
- Front & Rear Deflectors
- Cutting Capacity: 1" diameter material
- Tractor Req: Min 50-90 HP range

PRODUCT ORDER CODE	DESCRIPTION	APPRX. WEIGHT		LIST PRICE
	GRASS KING FLAIL BASE UNIT *(One Choice Required)*			
04006200	Grass King 62" Flail Mower	2038		16,478
04006202	Grass King 62" Flail Mower w/ Extreme Service Knives	2032		16,983
04007400	Grass King 74" Flail Mower	2080		17,077
04007410	Grass King 74" Flail Mower w/ Extreme Service Knives	2074		17,277
	LIFT PIN OPTIONS *(One Choice Required)*			
02965040	Lift Pin CAT I	8		N/C
02965050	Lift Pin CAT II	8		N/C
	OPTIONS			
00889899	Additional 12 Month Warranty			880
02965180	Additional Operators and Parts Manual			45
3570	Check Chains (CAT I)	8		196
3571M	Check Chains (CAT II)	15		421
00756655	Jack Assembly	11		83
02791800	Special Mower Paint			405
00888990	Set-up fee			600

ALAMO INDUSTRIAL
Wholegoods Department
(800) 882-5762

SWINGTRIM

Articulated Rear-Mount Boom Mower

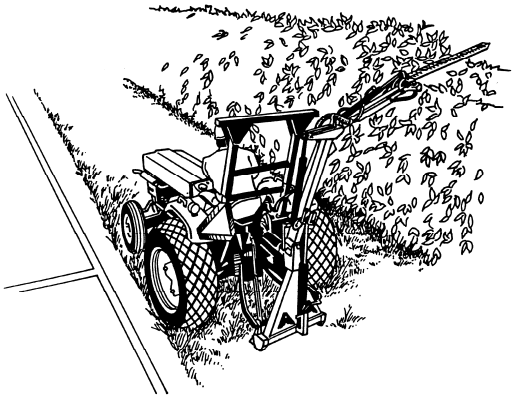

STANDARD SPECIFICATIONS

- CAT I Three-Point Hitch
- Boom Reach: 11' Up, 14' Out, 6' Down
- Double Swing
- Main Boom Arm is 2-3/4" Tubing
- Secondary Boom Arm is 2-1/4" Tubing
- Mechanical Breakaway
- Tractor-Supplied Hydraulics or Optional Tank Kit
- 5' Sickle Bar Head

PRODUCT ORDER CODE	DESCRIPTION	APPRX. WEIGHT		LIST PRICE
	SWINGTRIM BASE UNIT *(One Choice Required)*			
04090334	5' Swingtrim (Low-Flow, Requires 5 GPM)	460		10,240
04090337	5' Swingtrim (Hi-Flow, Requires 8 GPM)	460		10,240
	MOUNT KIT			
	Any tractor with CAT I, Three-Point Hitch, 540 PTO Shaft, 15 HP Minimum, 1210 Pound Minimum Tractor Weight. Tractor must have open center hydraulic system with maximum pressure relief setting of 3000 PSI. Front counterweight may be required.			
	OPTIONS			
00889899	Additional 12 Month Warranty			841
00763548CA	Additional Operators and Parts Manual			45
1090347	540 PTO Pump & Tank Hydraulic Kit (High Flow Only)			2,170
00888990	Set-up fee			750

Wholegoods Department
(800) 882-5762

PA41

Rear-Mount Boom Mower

STANDARD SPECIFICATIONS

- Welded Tubular Frame
- CAT I or CAT II Three-Point Hitch
- 17 Gallon Reservoir
- Self-Contained Hydraulics
- Output Horsepower: 25 hp
- Boom Reach: Up-16'8", Out-13'8"
- 1" Cutting Capacity
- Tractor Horsepower: 45 PTO hp Minimum
- Tractor Weight: 4,010 lbs Minimum*
- Machine Weight With Flail & Oil: 1,409 lbs

PRODUCT ORDER CODE	DESCRIPTION	APPRX. WEIGHT		LIST PRICE
	PA41 BASE UNIT			
04090258	PA41 RH Rear-Mount Boom Mower w/Lift Float & Cable Control	1360		12,883
	MOWER HEAD			
02987797	39" Sliding Pivot Universal Flail	418		6,661
	SAFETY KITS *(One Choice Required)*			
02964407	Cab Screen Kit			n/c
00765754	Rops Cage Kit			n/c
	MOUNT KITS			
Any tractor with CAT I or CAT II, three-point hitch, 540 PTO shaft, 45 PTO hp minimum. Front counterweight may be required.				
	OPTIONS			
00889899	Additional 12 Month Warranty			1,262
TBA	Additional Operators and Parts Manual			45
00888990	Set-up fee			1,500

*** This product line is not recommended for Kubota tractors.**

ALAMO INDUSTRIAL

Wholegoods Department
(800) 882-5762

MCCONNEL REAR-MOUNT BOOMS

PA47 & PA48M

STANDARD SPECIFICATIONS

- Welded Tubular Frame
- CAT II Three-Point Hitch
- Reservoir Capacity:
  PA47: 39 gal / PA48M: 47 gal
- Self-Contained Hydraulics
- Output Horsepower:
  PA47: 45 hp / PA48M: 54 hp
- Boom Reach:
  PA47: Up-16'0", Out-14'0"
  PA48M: Up-16'5", Out-15'0"
- 2" Cutting Capacity
- Minimum Tractor Horsepower:
  PA47: 50 PTO hp / PA48M: 60 PTO hp
- Minimum Tractor Weight:*
  PA47: 5,512 lbs / PA48M: 6,614 lbs
- Machine Weight With Flail & Oil:
  PA47: 2,151 lbs / PA48M: 2,750 lbs

PRODUCT ORDER CODE	DESCRIPTION	APPRX. WEIGHT		LIST PRICE
	PA47 & PA48M BASE UNITS *(One Choice Required)*			
04090260	PA47 Rear -Mount Boom	1951		16,474
04090262	PA48M Rear-Mount, Mid-Cut Boom	1985		19,102
	MOWER HEAD *(One Choice Required)* *See Options to Order Extra Mower Heads*			
02987798	PA47 - 47" Supercut Flail w/F91 Competition Knives	660		7,438
02987799	PA48M - 47" Multicut Flail w/Competition Knives	665		7,960
02988618	PA47/48M - 48" Rotary w/Flaps	600		7,210
	SAFETY KITS *(One Choice Required)*			
02964407	Cab Screen Kit			n/c
00765754	Rops Cage Kit			n/c
	MOUNT KIT *Any tractor with CAT II, three-point hitch, 540 PTO shaft, 60 Eng HP minimum. Front counterweight may be required.*			
	OPTIONS			
00889899	Additional 12 Month Warranty			1,262
TBA	PA47 Additional Operators & Parts Manual			45
TBA	PA48M Additional Operators & Parts Manual			45
00888990	Set-up fee			1,500

*** This product line is not recommended for Kubota tractors.**

ALAMO INDUSTRIAL
Wholegoods Department
(800) 882-5762

HydroSelect Wholegoods Pricing

Effective February 15, 2011

STATE OF OHIO
STATE TERM SCHEDULE
SCHEDULE NUMBER: 7751500508

© 2011 Alamo Group, Inc.

MEMBER OF THE ALAMO GROUP
ALWAYS ON THE CUTTING EDGE℠

Hydro Select Master Price Book

PRICES EFFECTIVE FEBRUARY 11, 2011

Table of Contents

Section	Page
Table of Contents	1
18' Axtreme Boom	2
22' Axtreme Boom	4
25' Axtreme Boom	6
28' Axtreme Boom	8
Axtreme Mount Kits	10
18' Machete Boom	13
22' Machete Boom	14
25' Machete Boom	15
Machete Mount Kits	16
Machete Front Mount Booms	17
24' Maverick Boom	18
30' Maverick Boom	19
Maverick Mount Kits	20
Rear Mount Booms	22
18' Samurai Boom	24
22' Samurai Boom	26
25' Samurai Boom	28
Samurai Mount Kits	30
17' Versa Boom	32
17' Versa Boom Mount Kits	34
20' Versa Boom	36
20' Versa Boom Mount Kits	38
23' Versa Boom	40
23' Versa Boom Mount Kits	42
10' Falcon	44
15' Falcon	45
Versa Flails	46
Versa Flail Mount Kits	47
5' Versa Rotary	50
5' Versa Rotary Mount Kits	52
6' Versa Rotary	56
6' Versa Rotary Mount Kits	57
Versa Pro Flail	60
74" & 88" Right Hand Interstater	61
74" & 88" Right Hand Interstater Mount Kits	62
Dual Wing Interstater	65
Dual Wing Interstater Mount Kits	66
88" Rear Interstater	68
96" Rear Interstater	69
John Deere Tractor 6430	71
John Deere Tractor 7130	72

ALAMO INDUSTRIAL

(800) 882-5762

18' AXTREME BOOM

18' Articulated Model

STANDARD SPECIFICATIONS

- Bolt-On Undermount with Front and Rear Attached Rails
- Exclusive Slewing Ring Bearing is Featured for Boom Maneuverability
- Standard Boom Structure Made from Alloy Steel
- Main Pivot Features 2' Chrome Pins with Greaseable, Hardened Steel Bushings
- Self Contained Front Mounted Hydraulic System
- Oil-to-Air Cooler with Electric Fan
- Ability to Mow Horizontally within 6" of Rear Tire with Swivel Heads
- Boom Features Dipper and Lift
- Boom Reach: Up 17'-1", Out-18', Down 9'-8"
- 180° Horizontal Boom Swing
- Axle-Mounted Boom Rest
- Mount Kit, all Wheel Weight, and Polycarbonate Window Included in Base Price
- Tractor Req: Min of 8,500 lbs and 90 HP. Min 90" Wheelbase and 18" Ground Clearance

HEAD SPECIFICATIONS

- 58" Cutting Diameter
- Alloy Deck Material with Double Wall Side Skirt
- 4-1/2"x9" Heat-Treated Alloy Spindle
- 152 HP Motor Direct-Coupled
- 2-1/2" x 5" Stacked Three-Leaf Blade Bar, Alloy Steel
- 5/8" x 5" High-Carbon Alloy Steel Blade, 360° Swing
- Standard (1) year limited parts and labor warranty.

PRODUCT ORDER CODE	DESCRIPTION	APPRX. WEIGHT		LIST PRICE
	18' Base Unit *(One Choice Required)*			
04831821	18' Axtreme II Boom w/Cable	4,800		34,308
04831820	18' Axtreme II Boom w/Joystick	5,000		40,913
	MOWER HEAD *(One Choice Required)*			
02986190AJ	60" Rotary w/Ctr Hyd Door, Blade Bar & Head Swivel (Joystick Remote) Includes 02986190 & 02986331	1115		13,582
02986190AC	60" Rotary w/Ctr Hyd Door, Blade Bar & Head Swivel (Cable) Includes 02986190 & 02986792	1115		13,582
02986203	60" Rotary w/Ctr Hyd Door, Blade Bar (No Head Swivel)	1061		11,708
02986213AJ	50" Rotary w/Ctr Hyd Door, Blade Bar & Head Swivel (Joystick Remote) Includes 02986213 & 02986331			12,937
02986213AC	50" Rotary w/Ctr Hyd Door, Blade Bar & Head Swivel (Cable) Includes 02986213 & 02986792			12,937
02986211	50" Rotary w/Ctr Hyd Door, Blade Bar (No Head Swivel)			11,063
02986212AJ	50" Rotary w/Ctr Hyd Door, Blade Pan & Head Swivel (Joystick Remote) Includes 02986212 & 02986331			12,176
02986212AC	50" Rotary w/Ctr Hyd Door, Blade Pan & Head Swivel (Cable) Includes 02986212 & 02986792			12,176
02986210	50" Rotary w/Ctr Hyd Door, Blade Pan (No Head Swivel)			10,302
02986251AJ	48" Flail-Axe w/Head Swivel (Joystick Remote) Includes 02986251 & 02986331			13,444
02986251AC	48" Flail-Axe w/Head Swivel (Cable) Includes 02986251 & 02986792			13,444
02986253	48" Flail-Axe (No Head Swivel)	777		11,571
02986252AJ	48" Flail-Axe, SHD Cuttershaft (3 oz Knives) w/Head Swivel (Joystick Remote) Includes 02986252 & 02986331			14,544
02986252AC	48" Flail-Axe, SHD Cuttershaft (3 oz Knives) w/Head Swivel (Cable) Includes 02986252 & 02986792			14,544
02988228	48" Grass Flail, SHD Cuttershaft			12,670
02988229	60" Grass Flail, SHD Cuttershaft	800		12,771
02988255	5' Timber Cat Sickle Bar	682		12,136
02988256	7' Timber Cat Sickle Bar	770		12,892
02986235	90" Buzzbar (4 Blade)	1098		14,422
02986229	69" Buzzbar (3 Blade)	705		12,800
02986219	48" Buzzbar (2 Blade)	550		10,262

18' AXTREME BOOM

18' Articulated Model

PRODUCT ORDER CODE	DESCRIPTION	APPRX. WEIGHT		LIST PRICE
	OPTIONS			
02988075A	Additional Operators and Parts Manuals			45
02989326	Quick Hitch Kit*			3,650
02989327	Hydraulic Kit for Quick Hitch Head**			484
02975647	Flail-Axe Jack Stand Kit***			299
02984479	Flail-Axe Swivel Hitch Post Conversion Kit			4,725
02984049	JD 6215/6415/6020/6030 Frt Axle Stabilizer Kit (4wd Only)			1,043
02984226	JD 6615/6715 Frt Axle Stabilizer Kit (4wd Only)			1,043
02985058	MF 5460 Frt Axle Stabilizer Kit (4wd Only)			1,043
02984671	MF 5465 Frt Axle Stabilizer Kit (4wd Only)			1,043
02984048	NH TS-A Frt Axle Stabilizer Kit (4wd Only)			1,043
02984877	NH TS-A Joystick Mount for Deluxe Seat			90
02985484	NH T6000 Series Frt Axle Stabilizer Kit (4wd Only)			1,043
02985029	Mounting Labor & Oil			6,560
02791800	Special Mower Paint			1,302
02968967	Special Tractor Paint			5,802
00889899A	Additional 12 Month Warranty (00889899)			3,702

** Includes all components to convert boom and (1) head to Quick Hitch*
*** Required to convert additional heads to Quick Hitch*
**** Required to level Flail-Axe for Quick Hitch*

22' AXTREME BOOM

22' Articulated Model

STANDARD SPECIFICATIONS

- Bolt-On Undermount with Front and Rear Attached Rails
- Exclusive Slewing Ring Bearing is Featured for Boom Maneuverability
- Standard Boom Structure Made from Alloy Steel
- Main Pivot Features 2' Chrome Pins with Greaseable, Hardened Steel Bushings
- Self Contained Front Mounted Hydraulic System
- Oil-to-Air Cooler with Electric Fan
- Ability to Mow Horizontally within 6" of Rear Tire with Swivel Heads
- Boom Features Dipper and Lift
- Boom Reach: Up-19' 7", Out-22', Down-12' 1"
- 180° Horizontal Boom Swing
- Axle-Mounted Boom Rest
- Mount Kit, all Wheel Weight, and Polycarbonate Window Included in Base Price
- Tractor Req: Min of 8,500 lbs and 90 HP. Min 90" Wheelbase and 18" Ground Clearance

HEAD SPECIFICATIONS

- 58" Cutting Diameter
- Alloy Deck Material with Double Wall Side Skirt
- 4-1/2"x9" Heat-Treated Alloy Spindle
- 152 HP Motor Direct-Coupled
- 2-1/2" x 5" Stacked Three-Leaf Blade Bar, Alloy Steel
- 5/8" x 5" High-Carbon Alloy Steel Blade, 360° Swing
- Standard (1) year limited parts and labor warranty.

PRODUCT ORDER CODE	DESCRIPTION	APPRX. WEIGHT		LIST PRICE
	22' Base Unit *(One Choice Required)*			
04832221	22' Axtreme II Boom w/Cable	5,000		36,022
04832220	22' Axtreme II Boom w/Joystick	5,200		42,076
	MOWER HEAD *(One Choice Required)*			
02986190AJ	60" Rotary w/Ctr Hyd Door, Blade Bar & Head Swivel (Joystick Remote) Includes 02986190 & 02986331	1115		13,582
02986190AC	60" Rotary w/Ctr Hyd Door, Blade Bar & Head Swivel (Cable) Includes 02986190 & 02986792	1115		13,582
02986203	60" Rotary w/Ctr Hyd Door, Blade Bar (No Head Swivel)	1061		11,708
02986213AJ	50" Rotary w/Ctr Hyd Door, Blade Bar & Head Swivel (Joystick Remote) Includes 02986213 & 02986331			12,937
02986213AC	50" Rotary w/Ctr Hyd Door, Blade Bar & Head Swivel (Cable) Includes 02986213 & 02986792			12,937
02986211	50" Rotary w/Ctr Hyd Door, Blade Bar (No Head Swivel)			11,063
02986212AJ	50" Rotary w/Ctr Hyd Door, Blade Pan & Head Swivel (Joystick Remote) Includes 02986212 & 02986331			12,176
02986212AC	50" Rotary w/Ctr Hyd Door, Blade Pan & Head Swivel (Cable) Includes 02986212 & 02986792			12,176
02986210	50" Rotary w/Ctr Hyd Door, Blade Pan (No Head Swivel)			10,302
02986251AJ	48" Flail-Axe w/Head Swivel (Joystick Remote) Includes 02986251 & 02986331			13,444
02986251AC	48" Flail-Axe w/Head Swivel (Cable) Includes 02986251 & 02986792			13,444
02986253	48" Flail-Axe (No Head Swivel)	777		11,571
02986252AJ	48" Flail-Axe, SHD Cuttershaft (3 oz Knives) w/Head Swivel (Joystick Remote) Includes 02986252 & 02986331			14,544
02986252AC	48" Flail-Axe, SHD Cuttershaft (3 oz Knives) w/Head Swivel (Cable) Includes 02986252 & 02986792			14,544
02988228	48" Grass Flail, SHD Cuttershaft			12,670
02988229	60" Grass Flail, SHD Cuttershaft	800		12,771
02988255	5' Timber Cat Sickle Bar	682		12,136
02988256	7' Timber Cat Sickle Bar	770		12,892
02986235	90" Buzzbar (4 Blade)	1098		14,422
02986229	69" Buzzbar (3 Blade)	705		12,800
02986219	48" Buzzbar (2 Blade)	550		10,262

22' AXTREME BOOM

22' Articulated Model

PRODUCT ORDER CODE	DESCRIPTION	APPRX. WEIGHT		LIST PRICE
	OPTIONS			
02988075A	Additional Operators and Parts Manuals			45
02989326	Quick Hitch Kit*			3,650
02989327	Hydraulic Kit for Quick Hitch Head**			484
02975647	Flail-Axe Jack Stand Kit***			299
02984479	Flail-Axe Swivel Hitch Post Conversion Kit			4,725
02984049	JD 6215/6415/6020/6030 Frt Axle Stabilizer Kit (4wd Only)			1,043
02984226	JD 6615/6715 Frt Axle Stabilizer Kit (4wd Only)			1,043
02985058	MF 5460 Frt Axle Stabilizer Kit (4wd Only)			1,043
02984671	MF 5465 Frt Axle Stabilizer Kit (4wd Only)			1,043
02984048	NH TS-A Frt Axle Stabilizer Kit (4wd Only)			1,043
02984877	NH TS-A Joystick Mount for Deluxe Seat			90
02985484	NH T6000 Series Frt Axle Stabilizer Kit (4wd Only)			1,043
02985029	Mounting Labor & Oil			6,560
02791800	Special Mower Paint			1,302
02968967	Special Tractor Paint			5,802
00889899A	Additional 12 Month Warranty (00889899)			3,702

** Includes all components to convert boom and (1) head to Quick Hitch*
*** Required to convert additional heads to Quick Hitch*
**** Required to level Flail-Axe for Quick Hitch*

25' AXTREME BOOM

25' Articulated Model

STANDARD SPECIFICATIONS

- Bolt-On Undermount with Front and Rear Attached Rails
- Exclusive Slewing Ring Bearing is Featured for Boom Maneuverability
- Standard Boom Structure Made from Alloy Steel
- Main Pivot Features 2' Chrome Pins with Greaseable, Hardened Steel Bushings
- Self Contained Front Mounted Hydraulic System
- Oil-to-Air Cooler with Electric Fan
- Ability to Mow Horizontally within 6" of Rear Tire with Swivel Heads
- Boom Features Dipper and Lift
- Boom Reach: Up-22' 2", Out-25', Down-15' 6"
- 180° Horizontal Boom Swing
- Axle-Mounted Boom Rest
- Mount Kit, all Wheel Weight, and Polycarbonate Window Included in Base Price
- Tractor Req: Min of 8,500 lbs and 90 HP. Min 90" Wheelbase and 18" Ground Clearance

HEAD SPECIFICATIONS

- 58" Cutting Diameter
- Alloy Deck Material with Double Wall Side Skirt
- 4-1/2"x9" Heat-Treated Alloy Spindle
- 152 HP Motor Direct-Coupled
- 2-1/2" x 5" Stacked Three-Leaf Blade Bar, Alloy Steel
- 5/8" x 5" High-Carbon Alloy Steel Blade, 360° Swing
- Standard (1) year limited parts and labor warranty.

PRODUCT ORDER CODE	DESCRIPTION	APPRX. WEIGHT		LIST PRICE
	25' Base Unit *(One Choice Required)*			
04832521	25' Axtreme II Boom w/Cable	5,500		38,085
04832520	25' Axtreme II Boom w/Joystick	5,700		44,138
	MOWER HEAD *(One Choice Required)*			
02986190AJ	60" Rotary w/Ctr Hyd Door, Blade Bar & Head Swivel (Joystick Remote) Includes 02986190 & 02986331	1115		13,582
02986190AC	60" Rotary w/Ctr Hyd Door, Blade Bar & Head Swivel (Cable) Includes 02986190 & 02986792	1115		13,582
02986203	60" Rotary w/Ctr Hyd Door, Blade Bar (No Head Swivel)	1061		11,708
02986213AJ	50" Rotary w/Ctr Hyd Door, Blade Bar & Head Swivel (Joystick Remote) Includes 02986213 & 02986331			12,937
02986213AC	50" Rotary w/Ctr Hyd Door, Blade Bar & Head Swivel (Cable) Includes 02986213 & 02986792			12,937
02986211	50" Rotary w/Ctr Hyd Door, Blade Bar (No Head Swivel)			11,063
02986212AJ	50" Rotary w/Ctr Hyd Door, Blade Pan & Head Swivel (Joystick Remote) Includes 02986212 & 02986331			12,176
02986212AC	50" Rotary w/Ctr Hyd Door, Blade Pan & Head Swivel (Cable) Includes 02986212 & 02986792			12,176
02986210	50" Rotary w/Ctr Hyd Door, Blade Pan (No Head Swivel)			10,302
02986251AJ	48" Flail-Axe w/Head Swivel (Joystick Remote) Includes 02986251 & 02986331			13,444
02986251AC	48" Flail-Axe w/Head Swivel (Cable) Includes 02986251 & 02986792			13,444
02986253	48" Flail-Axe (No Head Swivel)	777		11,571
02986252AJ	48" Flail-Axe, SHD Cuttershaft (3 oz Knives) w/Head Swivel (Joystick Remote) Includes 02986252 & 02986331			14,544
02986252AC	48" Flail-Axe, SHD Cuttershaft (3 oz Knives) w/Head Swivel (Cable) Includes 02986252 & 02986792			14,544
02988228	48" Grass Flail, SHD Cuttershaft			12,670
02988229	60" Grass Flail, SHD Cuttershaft	800		12,771
02988255	5' Timber Cat Sickle Bar	682		12,136
02988256	7' Timber Cat Sickle Bar	770		12,892
02986235	90" Buzzbar (4 Blade)	1098		14,422
02986229	69" Buzzbar (3 Blade)	705		12,800
02986219	48" Buzzbar (2 Blade)	550		10,262

25' AXTREME BOOM

25' Articulated Model

PRODUCT ORDER CODE	DESCRIPTION	APPRX. WEIGHT		LIST PRICE
	OPTIONS			
02988075A	Additional Operators and Parts Manuals			45
02989326	Quick Hitch Kit*			3,650
02989327	Hydraulic Kit for Quick Hitch Head**			484
02975647	Flail-Axe Jack Stand Kit***			299
02984479	Flail-Axe Swivel Hitch Post Conversion Kit			4,725
02984049	JD 6215/6415/6020/6030 Frt Axle Stabilizer Kit (4wd Only)			1,043
02984226	JD 6615/6715 Frt Axle Stabilizer Kit (4wd Only)			1,043
02985058	MF 5460 Frt Axle Stabilizer Kit (4wd Only)			1,043
02984671	MF 5465 Frt Axle Stabilizer Kit (4wd Only)			1,043
02984048	NH TS-A Frt Axle Stabilizer Kit (4wd Only)			1,043
02984877	NH TS-A Joystick Mount for Deluxe Seat			90
02985484	NH T6000 Series Frt Axle Stabilizer Kit (4wd Only)			1,043
02985029	Mounting Labor & Oil			6,560
02791800	Special Mower Paint			1,302
02968967	Special Tractor Paint			5,802
00889899A	Additional 12 Month Warranty (00889899)			3,702

** Includes all components to convert boom and (1) head to Quick Hitch*
*** Required to convert additional heads to Quick Hitch*
**** Required to level Flail-Axe for Quick Hitch*

28' AXTREME BOOM

28' Articulated Model

STANDARD SPECIFICATIONS

- Bolt-On Undermount with Front and Rear Attached Rails
- Exclusive Slewing Ring Bearing is Featured for Boom Maneuverability
- Standard Boom Structure Made from Alloy Steel
- Main Pivot Features 2' Chrome Pins with Greaseable, Hardened Steel Bushings
- Self Contained Front Mounted Hydraulic System
- Oil-to-Air Cooler with Electric Fan
- Ability to Mow Horizontally within 6" of Rear Tire with Swivel Heads
- Boom Features Dipper and Lift
- Boom Reach: Up-24' 2", Out-27', Down-17' 6"
- 180° Horizontal Boom Swing
- Axle-Mounted Boom Rest
- Mount Kit, all Wheel Weight, and Polycarbonate Window Included in Base Price
- Tractor Req: Min of 8,500 lbs and 90 HP. Min 90" Wheelbase and 18" Ground Clearance

HEAD SPECIFICATIONS

- 58" Cutting Diameter
- Alloy Deck Material with Double Wall Side Skirt
- 4-1/2"x9" Heat-Treated Alloy Spindle
- 152 HP Motor Direct-Coupled
- 2-1/2" x 5" Stacked Three-Leaf Blade Bar, Alloy Steel
- 5/8" x 5" High-Carbon Alloy Steel Blade, 360° Swing
- Standard (1) year limited parts and labor warranty.

PRODUCT ORDER CODE	DESCRIPTION	APPRX. WEIGHT		LIST PRICE
	28' Base Unit *(One Choice Required)*			
04832528	28' Axtreme II Boom w/Cable			42,257
04832628	28' Axtreme II Boom w/Joystick			48,483
	MOWER HEAD *(One Choice Required)*			
02986190AJ	60" Rotary w/Ctr Hyd Door, Blade Bar & Head Swivel (Joystick Remote) Includes 02986190 & 02986331	1115		13,582
02986190AC	60" Rotary w/Ctr Hyd Door, Blade Bar & Head Swivel (Cable) Includes 02986190 & 02986792	1115		13,582
02986203	60" Rotary w/Ctr Hyd Door, Blade Bar (No Head Swivel)	1061		11,708
02986213AJ	50" Rotary w/Ctr Hyd Door, Blade Bar & Head Swivel (Joystick Remote) Includes 02986213 & 02986331			12,937
02986213AC	50" Rotary w/Ctr Hyd Door, Blade Bar & Head Swivel (Cable) Includes 02986213 & 02986792			12,937
02986211	50" Rotary w/Ctr Hyd Door, Blade Bar (No Head Swivel)			11,063
02986212AJ	50" Rotary w/Ctr Hyd Door, Blade Pan & Head Swivel (Joystick Remote) Includes 02986212 & 02986331			12,176
02986212AC	50" Rotary w/Ctr Hyd Door, Blade Pan & Head Swivel (Cable) Includes 02986212 & 02986792			12,176
02986210	50" Rotary w/Ctr Hyd Door, Blade Pan (No Head Swivel)			10,302
02986251AJ	48" Flail-Axe w/Head Swivel (Joystick Remote) Includes 02986251 & 02986331			13,444
02986251AC	48" Flail-Axe w/Head Swivel (Cable) Includes 02986251 & 02986792			13,444
02986253	48" Flail-Axe (No Head Swivel)	777		11,571
02986252AJ	48" Flail-Axe, SHD Cuttershaft (3 oz Knives) w/Head Swivel (Joystick Remote) Includes 02986252 & 02986331			14,544
02986252AC	48" Flail-Axe, SHD Cuttershaft (3 oz Knives) w/Head Swivel (Cable) Includes 02986252 & 02986792			14,544
02988228	48" Grass Flail, SHD Cuttershaft			12,670
02988229	60" Grass Flail, SHD Cuttershaft	800		12,771
02988255	5' Timber Cat Sickle Bar	682		12,136
02988256	7' Timber Cat Sickle Bar	770		12,892
02986235	90" Buzzbar (4 Blade)	1098		14,422
02986229	69" Buzzbar (3 Blade)	705		12,800
02986219	48" Buzzbar (2 Blade)	550		10,262

28' AXTREME BOOM

28' Articulated Model

PRODUCT ORDER CODE	DESCRIPTION	APPRX. WEIGHT		LIST PRICE
	OPTIONS			
02988075A	Additional Operators and Parts Manuals			45
02989326	Quick Hitch Kit*			3,650
02989327	Hydraulic Kit for Quick Hitch Head**			484
02975647	Flail-Axe Jack Stand Kit***			299
02985029	Mounting Labor & Oil			6,560
02791800	Special Mower Paint			1,302
02968967	Special Tractor Paint			5,802
00889899A	Additional 12 Month Warranty (00889899)			3,702

** Includes all components to convert boom and (1) head to Quick Hitch*
*** Required to convert additional heads to Quick Hitch*
**** Required to level Flail-Axe for Quick Hitch*

18' AXTREME

MOUNT KIT OPTIONS

TRACTOR DESCRIPTION	MOUNT KIT	MAXIMUM TIRE SIZE		
		2WD Front	4WD Front	Rear
Case IH				
Case-IH MXU100/110 Cab/2&4wd (Joystick)	02987221	11.00-16	14.9-24	18.4-34
Case-IH MXU100/110 Cab/2&4wd (Cable)	02987224	11.00-16	14.9-24	18.4-34
Case-IH Maxxum 115/125/125 Pro/140 Pro Cab/2&4wd (Joystick)	02987104	11.00-16	14.9-24	18.4-34
Case-IH Maxxum 115/125/125 Pro/140 Pro Cab/2&4wd (Cable)	02987100	11.00-16	14.9-24	18.4-34
John Deere				
JD 6215/6415 Cab/2&4wd (Joystick)	02990347	10.00-16	13.6-24	18.4-34
JD 6120/6220/6320/6420 Cab/2&4wd (Joystick)	02990347	10.00-16	13.6-24	18.4-34
JD 6230/6330/6430 "Mid-Spec" Cab/2&4wd (Joystick)	02991525	10.00-16	13.6-24	18.4-34
JD 6230/6330/6430 "Mid-Spec" Cab/2&4wd (Cable)	02987062	10.00-16	13.6-24	18.4-34
JD 6230/6330/6430 "Premium" Cab/2&4wd (Joystick)	02987066	10.00-16	13.6-24	18.4-34
JD 6230/6330/6430 "Premium" Cab/2&4wd (Cable)	02987062	10.00-16	13.6-24	18.4-34
JD 7220/7320 Cab/2&4wd (Joystick/34" Flanged Rear Whl)	02987200	11.00-16	13.6-28	18.4-34
JD 7220/7320 Cab/2&4wd (Joystick/38" Flanged Rear Whl)	02987202	11.00-16	14.9-28	18.4-38
JD 7130/7230 "Mid-Spec" Cab/2&4wd (4 or 6 Cyld / 55 gal. Fuel Tank / Joystick)	02990424	11.00-16	13.6-28	18.4-38
Massey Ferguson				
MF 5460 Cab/2&4wd (Joystick)	02987204	11.00-16	14.9-24	18.4-34
MF 5460 Cab/2&4wd (Cable)	02987207	11.00-16	14.9-24	18.4-34
MF 5465 Cab/2&4wd (Tier II Engine Only / Joystick)	02987213	11.00-16	14.9-24	18.4-34
New Holland				
NH TS100A/110A Cab/2&4wd (Joystick)	02987221	11.00-16	14.9-24	18.4-34
NH TS100A/110A Cab/2&4wd (Cable)	02987224	11.00-16	14.9-24	18.4-34
NH T6030/6050/6070 Cab/4wd (Built Before May 2010 / Joystick)	02987104	11.00-16	14.9-24	18.4-34
NH T6030/6050/6070 Cab/4wd (Built Before May 2010 / Cable)	02987100	11.00-16	14.9-24	18.4-34
NH T6030/6050/6070 Cab/4wd (Built After May 2010 / Joystick)	02991283	11.00-16	14.9-24	18.4-34
NH T6030/6050/6070 Cab/4wd (Built After May 2010 / Cable)	02991282	11.00-16	14.9-24	18.4-34

OTHER SPECIFICATIONS

(1) Always use the maximum tire size for favorable ground clearance.
(2) Tractors should not be ordered with armrest-integrated controls.
(3) Tractors must be equipped with flanged rear rims unless otherwise noted.
(4) Right handrail removal may be necessary for boom transport clearance.
(5) John Deere tractors must include a standard through-hood exhaust.
(6) Case-New Holland mount kits include an exhaust relocation feature.

22' & 25' AXTREME

MOUNT KIT OPTIONS

TRACTOR DESCRIPTION	MOUNT KIT	MAXIMUM TIRE SIZE		
		2WD Front	4WD Front	Rear
Case IH				
Case-IH MXU100/110 Cab/2&4wd (Joystick)	02987226	11.00-16	14.9-24	18.4-34
Case-IH MXU100/110 Cab/2&4wd (Cable)	02987227	11.00-16	14.9-24	18.4-34
Case-IH MXU115/125/130/135 Cab/2&4wd (Joystick)	02987232	11.00-16	14.9-24	18.4-34
Case-IH MXU115/125/130/135 Cab/2&4wd (Cable)	02987235	11.00-16	14.9-24	18.4-34
Case-IH Maxxum 110/110 Pro/120 Pro/130 Pro Cab/2&4wd (Joystick)	02987094	11.00-16	14.9-24	18.4-34
Case-IH Maxxum 110/110 Pro/120 Pro/130 Pro Cab/2&4wd (Cable)	02987098	11.00-16	14.9-24	18.4-34
Case-IH Maxxum 115/125/125 Pro/140 Pro Cab/2&4wd (Joystick)	02987107	11.00-16	14.9-24	18.4-34
Case-IH Maxxum 115/125/125 Pro/140 Pro Cab/4wd w/Repl. Fuel Tank (Joystick)	02990277	N/A	14.9-28	18.4-38
Case-IH Maxxum 115/125/125 Pro/140 Pro Cab/2&4wd (Cable)	02987106	11.00-16	14.9-24	18.4-34
Challenger				
Challenger MT445B/455B/465B Cab/2&4wd (Tier III Engine Only)	02990890	11.00-16	14.9-24	18.4-34
John Deere				
JD 6230/6330/6430 "Mid-Spec" Cab/2&4wd (Joystick)	02987070	10.00-16	13.6-24	18.4-34
JD 6230/6330/6430 "Mid-Spec" Cab/2&4wd (Cable)	02987069	10.00-16	13.6-24	18.4-34
JD 6230/6330/6430 "Premium" Cab/2&4wd (Joystick)	02987068	10.00-16	13.6-24	18.4-34
JD 6230/6330/6430 "Premium" Cab/2&4wd (Cable)	02987069	10.00-16	13.6-24	18.4-34
JD 6615/6715 Cab/2&4wd (Joystick)	02987195	11.00-16	13.6-24	18.4-34
JD 6615/6715 Cab/2&4wd (Cable)	02987198	11.00-16	13.6-24	18.4-34
JD 7220/7320 Cab/2&4wd (Joystick/38" Rack & Pinion Axle)	02991349	11.00-16	13.6-28	18.4-34
JD 7220/7320 Cab/2&4wd (Cable/38" Rack & Pinion Axle)	02990131	11.00-16	13.6-28	18.4-34
JD 7130/7230 "Mid-Spec" Cab/2&4wd (4 or 6 Cyld / 55 gal. Fuel Tank / Joystick)	02987072	11.00-16	13.6-28	18.4-38
JD 7130/7230 "Premium" Cab/2&4wd (6 Cyld / 55 gal. Fuel Tank / Flanged Rear Whl / Built Before Nov. 1, 2010 / Joystick)	02987076	11.00-16	14.9-28	18.4-38
Massey Ferguson				
MF 5460 Cab/2&4wd (Joystick)	02987211	11.00-16	14.9-24	18.4-34
MF 5460 Cab/2&4wd (Cable)	02987210	11.00-16	14.9-24	18.4-34
MF 5465 Cab/2&4wd (Tier II Engine Only / Joystick)	02987215	11.00-16	14.9-24	18.4-34
New Holland				
NH 5610S/6610S ROPS/2&4wd (Cable)	02989073	10.00-16	14.9-24	18.4-34
NH TS100A/110A Cab/2&4wd (Joystick)	02987226	11.00-16	14.9-24	18.4-34
NH TS100A/110A Cab/2&4wd (Cable)	02987227	11.00-16	14.9-24	18.4-34
NH TS115A/125A/130A/135A Cab/2&4wd (Joystick)	02987232	11.00-16	14.9-24	18.4-34
NH TS115A/125A/130A/135A Cab/2&4wd (Cable)	02987235	11.00-16	14.9-24	18.4-34
NH T6010/6020/6040/6060 Cab/2&4wd (Built Before May 2010 / Joystick)	02987094	11.00-16	14.9-24	18.4-34
NH T6010/6020/6040/6060 Cab/2&4wd (Built Before May 2010 / Cable)	02987098	11.00-16	14.9-24	18.4-34
NH T6010/6020/6040/6060 Cab/2&4wd (Built After May 2010 / Joystick)	02991281	11.00-16	14.9-24	18.4-34
NH T6010/6020/6040/6060 Cab/2&4wd (Built After May 2010 / Cable)	02991280	11.00-16	14.9-24	18.4-34
NH T6030/6050/6070 Cab/2&4wd (Built Before May 2010 / Joystick)	02987107	11.00-16	14.9-24	18.4-34
NH T6030/6050/6070 Cab/2&4wd (Built Before May 2010 / Cable)	02987106	11.00-16	14.9-24	18.4-34
NH T6030/6050/6070 Cab/4wd w/Repl. Fuel Tank (Built Before May 2010 / Joystick)	02990277	N/A	14.9-28	18.4-38
NH T6030/6050/6070 Cab/2&4wd (Built After May 2010 / Joystick)	02991285	11.00-16	14.9-24	18.4-34
NH T6030/6050/6070 Cab/2&4wd (Built After May 2010 / Cable)	02991284	11.00-16	14.9-24	18.4-34
NH T6030/6050/6070 Cab/4wd w/Repl. Fuel Tank (Built After May 2010 / Joystick)	02991286	N/A	14.9-28	18.4-38
NH TS6020/6030 ROPS/2&4wd (Joystick)	02990973	10.00-16	14.9-24	18.4-34

OTHER SPECIFICATIONS

(1) Always use the maximum tire size for favorable ground clearance.
(2) Tractors should not be ordered with armrest-integrated controls.
(3) Tractors must be equipped with flanged rear rims unless otherwise noted.
(4) Right handrail removal may be necessary for boom transport clearance.
(5) John Deere tractors must include a standard through-hood exhaust.
(6) Case-New Holland mount kits include an exhaust relocation feature.

28' AXTREME

MOUNT KIT OPTIONS

TRACTOR DESCRIPTION	MOUNT KIT	MAXIMUM TIRE SIZE		
		2WD Front	4WD Front	Rear
Case IH				
Case-IH MXU100/110 Cab/4wd (Joystick)	02986063	N/A	14.9-24	18.4-34
Case-IH MXU100/110 Cab/4wd (Cable)	02986072	N/A	14.9-24	18.4-34
Case-IH MXU115/125/130/135 Cab/4wd (Joystick)	02986317	N/A	14.9-24	18.4-34
Case-IH MXU115/125/130/135 Cab/4wd (Cable)	02989085	N/A	14.9-24	18.4-34
Case-IH Maxxum 110/110 Pro/120 Pro/130 Pro ROPS/4wd (Cable)	02990450	N/A	14.9-24	18.4-34
Case-IH Maxxum 115/125/125 Pro/140 Pro Cab/4wd (Cable)	02990392	N/A	14.9-24	18.4-34
Case-IH Maxxum 115/125/125 Pro/140 Pro Cab/4wd w/Repl. Fuel Tank (Cable)	02990473	N/A	14.9-28	18.4-38
Case-IH Maxxum 115/125/125 Pro/140 Pro ROPS/4wd (Cable)	02989480	N/A	14.9-24	18.4-34
John Deere				
JD 6230/6330/6430 "Mid-Spec" Cab/2&4wd (Joystick)	02989733	N/A	13.6-24	18.4-34
JD 6230/6330/6430 "Mid-Spec" Cab/2&4wd (Cable)	02990112	N/A	13.6-24	18.4-34
JD 7220/7320 Cab/2&4 (Joystick/34" Flanged Rear Whl)	02989265	N/A	13.6-28	18.4-34
JD 7220/7320 Cab/2&4 (Cable w/34" Flanged Rear Whl)	02989263	N/A	13.6-28	18.4-34
JD 7130/7230 "Mid-Spec" Cab/4wd (6 Cyld / 55 gal. Fuel Tank / Joystick)	02988263	N/A	13.6-28	18.4-38
JD 7130/7230 "Prem" Cab/4wd (6 Cyld / 55 gal. Fuel Tank / Flanged Rear Whl / Built Before Nov. 1, 2010 / Joystick)	02986776	N/A	14.9-28	18.4-38
JD 7130/7230 "Prem" Cab/4wd (6 Cyld / 55 gal. Fuel Tank / Flanged Rear Whl / Built Before Nov. 1, 2010 / Cable)	02986773	N/A	14.9-28	18.4-38
Massey Ferguson				
MF 5465/5475 Cab/4wd (Tier III Perkins Engine Only / Cable)	02990214	N/A	14.9-28	18.4-38
New Holland				
NH TS100A/110A Cab/4wd (Joystick)	02986063	N/A	14.9-24	18.4-34
NH TS100A/110A Cab/4wd (Cable)	02986072	N/A	14.9-24	18.4-34
NH TS115A/125A/130A/135A Cab/4wd (Joystick)	02986317	N/A	14.9-24	18.4-34
NH TS115A/125A/130A/135A Cab/4wd (Cable)	02989085	N/A	14.9-24	18.4-34
NH T6010/6020 "Delta" ROPS/4wd (Cable)	02990450	N/A	14.9-24	18.4-34
NH T6030/6050/6070 Cab/4wd (Built Before May 2010 / Cable)	02990392	N/A	14.9-24	18.4-34
NH T6030/6050/6070 Cab/4wd w/Repl. Fuel Tank (Built Before May 2010 / Cable)	02990473	N/A	14.9-28	18.4-38
NH T6030/6050/6070 Cab/4wd w/Repl. Fuel Tank (Built After May 2010 / Joystick)	02991351	N/A	14.9-28	18.4-38
NH T6030/6050/6070 Cab/4wd w/Repl. Fuel Tank (Built After May 2010 / Cable)	02991287	N/A	14.9-28	18.4-38
NH T6030/6050 ROPS/4wd (Cable)	02989480	N/A	14.9-24	18.4-34
NH TS6020/6030 ROPS/4wd (Cable)	02990478	N/A	14.9-24	18.4-34

OTHER SPECIFICATIONS

(1) Always use the maximum tire size for favorable ground clearance.
(2) Tractors should not be ordered with armrest-integrated controls.
(3) Tractors must be equipped with flanged rear rims unless otherwise noted.
(4) Right handrail removal may be necessary for boom transport clearance.
(5) John Deere tractors must include a standard through-hood exhaust.
(6) Case-New Holland mount kits include an exhaust relocation feature.

18' MACHETE BOOM

18' Articulated Model

STANDARD SPECIFICATIONS

- 4" X 4" Square Tubular Frame
- Features a 2 1/2" greaseable "king post" style turning arm.
- Main pivots points utilize 2' pins with greaseable, hardened steel bushings.
- Self contained hydraulic system.
- 20 gal Front-Mounted Reservoir/35 gal Total System Volume
- Motor Circuit: Piston Pump Rated @ 25 gpm (43.8 hp) & 3,000 psi @ 2,200 rpm.
  Charge Pump Rated @ 8 gpm (1.4 hp) & 300 psi @ 2,200 rpm.
- Control Circuit: Piston Pump Rated @ 18 gpm (31.5 hp) & 3,000 psi @ 2,200 rpm.
- Inner Boom Arm 6"x6"x1/4" Alloy Steel Tubing
- Outer Boom Arm 5"x5"x1/4" Alloy Steel Tubing
- 120° Horizontal Boom Swing
- Boom Reach: Up-18' 7", Out-18', Down-5' 1".
- Mount Kit, Wheel Weight, and Polycarbonate Window Included in Base Price
- Tractor Req: Min of 8,500 lbs and 90 eng. hp. Min 90" Wheelbase and 18" Ground Clearance

HEAD SPECIFICATIONS

- 58" Cutting Diameter
- Alloy Deck Material with Double Wall Side Skirt
- 4-1/2"x9" Heat-Treated Alloy Spindle
- 205 HP Direct-Coupled Piston Motor
- Stacked Three-Leaf, Alloy Steel Blade Bar
- 5/8" x 5" Double -Edged, Tempered Steel Blades, 360° Swing
- Standard (1) year limited parts and labor warranty.

PRODUCT ORDER CODE	DESCRIPTION	APPRX. WEIGHT		LIST PRICE
	18' Base Unit *(One Choice Required)*			
04861800	18' Machete II Boom - 2wd			36,822
04861801	18' Machete II Boom - 4wd			36,822
	MOWER HEAD *(One Choice Required)*			
02986191	60" Rotary w/Ctr Hyd Door, Blade Bar & Head Swivel	1,080		15,221
02986205	60" Rotary w/Ctr Hyd Door, Blade Bar (No Head Swivel)	1,026		13,977
02986197	50" Rotary w/Ctr Hyd Door, Blade Bar & Head Swivel			14,901
02986704	50" Rotary w/Ctr Hyd Door, Blade Bar (No Head Swivel)			13,214
02986198	50" Rotary w/Ctr Hyd Door, Blade Pan & Head Swivel			14,141
02986703	50" Rotary w/Ctr Hyd Door, Blade Pan (No Head Swivel)			12,454
02986262	48" Flail-Axe w/Head Swivel			14,367
02986254	48" Flail-Axe (No Head Swivel)			12,680
02989697	48" Flail-Axe, SHD Cuttershaft (4 oz Knives, No Head Swivel)			13,948
02986263	60" HD Grass Flail w/Head Swivel			14,995
02988186	60" HD Grass Flail (No Head Swivel)	870		13,308
02988159	5' Timber Cat Sickle Bar	682		10,807
02988158	7' Timber Cat Sickle Bar	770		11,737
02986245	90" Buzzbar (4 Blade)	1098		13,486
02986237	69" Buzzbar (3 Blade)	705		12,737
02986236	48" Buzzbar (2 Blade)	550		10,213
02988100	Ditcher Head (Hitch Post Mounted)			11,841
	OPTIONS			
02986941A	Additional Operators and Parts Manuals			45
02989463	Quick Hitch Kit*			3,285
02989464	Hydraulic Kit for Quick Hitch Head**			435
02975647M	Flail-Axe Jack Stand Kit*** (02975647)			269
02984400	HD Grass Flail Jack Stand Kit***			278
02982002	Mounting Labor & Oil			6,919
02791800	Special Mower Paint			1,302
02968967	Special Tractor Paint			5,802
00889899MC	Additional 12 Month Warranty (00889899)			3,365

** Includes all components to convert boom and (1) head to Quick Hitch*
*** Required to convert additional heads to Quick Hitch*
**** Required to level Flail Heads for Quick Hitch*

ALAMO INDUSTRIAL
(800) 882-5762

Prices Effective February 11, 2011

22' MACHETE BOOM

22' Articulated Model

STANDARD SPECIFICATIONS

- 4" X 4" Square Tubular Frame
- Features a 2 1/2" greaseable "king post" style turning arm.
- Main pivots points utilize 2' pins with greaseable, hardened steel bushings.
- Self contained hydraulic system.
- 20 gal Front-Mounted Reservoir/35 gal Total System Volume
- Motor Circuit: Piston Pump Rated @ 25 gpm (43.8 hp) & 3,000 psi @ 2,200 rpm.
  Charge Pump Rated @ 8 gpm (1.4 hp) & 300 psi @ 2,200 rpm.
- Control Circuit: Piston Pump Rated @ 18 gpm (31.5 hp) & 3,000 psi @ 2,200 rpm.
- Inner Boom Arm 6"x6"x1/4" Alloy Steel Tubing
- Outer Boom Arm 5"x5"x1/4" Alloy Steel Tubing
- 120° Horizontal Boom Swing
- Boom Reach: Up-22' 7", Out-22', Down-9' 1".
- Mount Kit, Wheel Weight, and Polycarbonate Window Included in Base Price
- Tractor Req: Min of 8,500 lbs and 90 eng. hp. Min 90" Wheelbase and 18" Ground Clearance

HEAD SPECIFICATIONS

- 58" Cutting Diameter
- Alloy Deck Material with Double Wall Side Skirt
- 4-1/2"x9" Heat-Treated Alloy Spindle
- 205 HP Direct-Coupled Piston Motor
- Stacked Three-Leaf, Alloy Steel Blade Bar
- 5/8" x 5" Double -Edged, Tempered Steel Blades, 360° Swing
- Standard (1) year limited parts and labor warranty.

PRODUCT ORDER CODE	DESCRIPTION	APPRX. WEIGHT		LIST PRICE
	22' Base Unit *(One Choice Required)*			
04862200	22' Machete II Boom - 2wd			37,868
04862201	22' Machete II Boom - 4wd			37,868
	MOWER HEAD *(One Choice Required)*			
02986191	60" Rotary w/Ctr Hyd Door, Blade Bar & Head Swivel	1,080		15,221
02986205	60" Rotary w/Ctr Hyd Door, Blade Bar (No Head Swivel)	1,026		13,977
02986197	50" Rotary w/Ctr Hyd Door, Blade Bar & Head Swivel			14,901
02986704	50" Rotary w/Ctr Hyd Door, Blade Bar (No Head Swivel)			13,214
02986198	50" Rotary w/Ctr Hyd Door, Blade Pan & Head Swivel			14,141
02986703	50" Rotary w/Ctr Hyd Door, Blade Pan (No Head Swivel)			12,454
02986262	48" Flail-Axe w/Head Swivel			14,367
02986254	48" Flail-Axe (No Head Swivel)			12,680
02989697	48" Flail-Axe, SHD Cuttershaft (4 oz Knives, No Head Swivel)			13,948
02986263	60" HD Grass Flail w/Head Swivel			14,995
02988186	60" HD Grass Flail (No Head Swivel)	870		13,308
02988159	5' Timber Cat Sickle Bar	682		10,807
02988158	7' Timber Cat Sickle Bar	770		11,737
02986245	90" Buzzbar (4 Blade)	1098		13,486
02986237	69" Buzzbar (3 Blade)	705		12,737
02986236	48" Buzzbar (2 Blade)	550		10,213
02988100	Ditcher Head (Hitch Post Mounted)			11,841
	OPTIONS			
02986941A	Additional Operators and Parts Manuals			45
02989463	Quick Hitch Kit*			3,285
02989464	Hydraulic Kit for Quick Hitch Head**			435
02975647M	Flail-Axe Jack Stand Kit*** (02975647)			269
02984400	HD Grass Flail Jack Stand Kit***			278
02982002	Mounting Labor & Oil			6,919
02791800	Special Mower Paint			1,302
02968967	Special Tractor Paint			5,802
00889899MC	Additional 12 Month Warranty (00889899)			3,365

** Includes all components to convert boom and (1) head to Quick Hitch*

*** Required to convert additional heads to Quick Hitch*

**** Required to level Flail Heads for Quick Hitch*

ALAMO INDUSTRIAL
(800) 882-5762

Prices Effective February 11, 2011

25' MACHETE BOOM

25' Articulated Model

STANDARD SPECIFICATIONS

- 4" X 4" Square Tubular Frame
- Features a 2 1/2" greaseable "king post" style turning arm.
- Main pivots points utilize 2' pins with greaseable, hardened steel bushings.
- Self contained hydraulic system.
- 20 gal Front-Mounted Reservoir/35 gal Total System Volume
- Motor Circuit: Piston Pump Rated @ 25 gpm (43.8 hp) & 3,000 psi @ 2,200 rpm.
  Charge Pump Rated @ 8 gpm (1.4 hp) & 300 psi @ 2,200 rpm.
- Control Circuit: Piston Pump Rated @ 18 gpm (31.5 hp) & 3,000 psi @ 2,200 rpm.
- Inner Boom Arm 6"x6"x1/4" Alloy Steel Tubing
- Outer Boom Arm 5"x5"x1/4" Alloy Steel Tubing
- 120° Horizontal Boom Swing
- Boom Reach: Up-25' 7", Out-25', Down-12' 1".
- Mount Kit, Wheel Weight, and Polycarbonate Window Included in Base Price
- Tractor Req: Min of 8,500 lbs and 90 eng. hp. Min 90" Wheelbase and 18" Ground Clearance

HEAD SPECIFICATIONS

- 58" Cutting Diameter
- Alloy Deck Material with Double Wall Side Skirt
- 4-1/2"x9" Heat-Treated Alloy Spindle
- 205 HP Direct-Coupled Piston Motor
- Stacked Three-Leaf, Alloy Steel Blade Bar
- 5/8" x 5" Double -Edged, Tempered Steel Blades, 360° Swing
- Standard (1) year limited parts and labor warranty.

PRODUCT ORDER CODE	DESCRIPTION	APPRX. WEIGHT		LIST PRICE
	18' Base Unit *(One Choice Required)*			
04862500	25' Machete II Boom - 2wd			39,724
04862501	25' Machete II Boom - 4wd			39,724
	MOWER HEAD *(One Choice Required)*			
02986191	60" Rotary w/Ctr Hyd Door, Blade Bar & Head Swivel	1,080		15,221
02986205	60" Rotary w/Ctr Hyd Door, Blade Bar (No Head Swivel)	1,026		13,977
02986197	50" Rotary w/Ctr Hyd Door, Blade Bar & Head Swivel			14,901
02986704	50" Rotary w/Ctr Hyd Door, Blade Bar (No Head Swivel)			13,214
02986198	50" Rotary w/Ctr Hyd Door, Blade Pan & Head Swivel			14,141
02986703	50" Rotary w/Ctr Hyd Door, Blade Pan (No Head Swivel)			12,454
02986262	48" Flail-Axe w/Head Swivel			14,367
02986254	48" Flail-Axe (No Head Swivel)			12,680
02989697	48" Flail-Axe, SHD Cuttershaft (4 oz Knives, No Head Swivel)			13,948
02986263	60" HD Grass Flail w/Head Swivel			14,995
02988186	60" HD Grass Flail (No Head Swivel)	870		13,308
02988159	5' Timber Cat Sickle Bar	682		10,807
02988158	7' Timber Cat Sickle Bar	770		11,737
02986245	90" Buzzbar (4 Blade)	1098		13,486
02986237	69" Buzzbar (3 Blade)	705		12,737
02986236	48" Buzzbar (2 Blade)	550		10,213
02988100	Ditcher Head (Hitch Post Mounted)			11,841
	OPTIONS			
02986941A	Additional Operators and Parts Manuals			45
02989463	Quick Hitch Kit*			3,285
02989464	Hydraulic Kit for Quick Hitch Head**			435
02975647M	Flail-Axe Jack Stand Kit*** (02975647)			269
02984400	HD Grass Flail Jack Stand Kit***			278
02982002	Mounting Labor & Oil			6,919
02791800	Special Mower Paint			1,302
02968967	Special Tractor Paint			5,802
00889899MC	Additional 12 Month Warranty (00889899)			3,365

** Includes all components to convert boom and (1) head to Quick Hitch*
*** Required to convert additional heads to Quick Hitch*
**** Required to level Flail Heads for Quick Hitch*

ALAMO INDUSTRIAL
(800) 882-5762

Prices Effective February 11, 2011

18', 22' & 25' MACHETE 2

MOUNT KIT OPTIONS

TRACTOR DESCRIPTION	MOUNT KIT	MAXIMUM TIRE SIZE		
		2WD Front	4WD Front	Rear
Case IH				
Case-IH Maxxum 110/110 Pro/120 Pro/130 Pro Cab/4wd	02987861		14.9-24	18.4-34
Case-IH Maxxum 115/125/125 Pro/140 Pro Cab/2wd	02988161	11.00-16		18.4-34
Case-IH Maxxum 115/125/125 Pro/140 Pro Cab/4wd	02988204		14.9-24	18.4-34
Case-IH Puma 165/180/195/210 Cab/4wd (Frt Axle Stabilizer Not Incl.)	02990699		16.9R30	20.8R42
Challenger				
Challenger MT445B/455B/465B Cab/4wd (Tier III Engine Only)	02989771		14.9-24	18.4-34
Challenger MT475B Cab/4wd (Tier III)	02989824		14.9-28	18.4-38
John Deere				
JD 6110/6210/6310/6405/6410 ROPS/4wd	02989188		12.4-24	18.4-30
JD 6110/6210/6310/6405/6410 Cab/2&4wd (Frt Axle Stabilizer Not Incl.)	02990683	10.00-16	12.4-24	18.4-30
JD 6215/6415 Cab/2wd	02990190	10.00-16		18.4-30
JD 6220/6320/6420 (Tier II) Cab/2wd	02990190	10.00-16		18.4-30
JD 6230/6330/6430 "Mid-Spec" Cab/2wd	02988521	10.00-16		18.4-34
JD 6230/6330/6430 "Mid-Spec" Cab/4wd	02987774		13.6-24	18.4-34
JD 6230/6330/6430 "Premium" Cab/4wd	02987901		13.6-24	18.4-34
JD 7130/7230 "Mid-Spec" Cab/2wd (Frt Axle Stabilizer Not Incl.)	02989869	11.00-16		18.4-38
JD 7130/7230 "Mid-Spec" Cab/4wd	02987751		13.6-28	18.4-38
JD 7130/7230 "Prem" Cab/4wd (6 cyld / 55 gal. fuel tank / Flanged Rear Whl / Built Before Nov. 1, 2010)	02989132		14.9-28	18.4-38
JD 7130/7230/7330 "Prem" Cab/4wd (4 & 6 cyld / 66 gal. fuel tank / Rack & Pinion Rear	02991260		14.9-28	18.4-38
Massey Ferguson				
MF 5465/5475 Cab/4wd (Tier III Perkins Engine Only)	02988043		14.9-24	18.4-34
New Holland				
NH TS90/100/110 Cab/2wd (Frt Axle Stabilizer Not Incl.)	02988372	10.00-16		18.4-30
NH T6020/6040/6060 Cab/4wd (Built Before May 2010)	02987861		14.9-24	18.4-34
NH T6020/6040/6060 Cab/4wd (Built After May 2010)	02991288		14.9-24	18.4-34
NH T6030/6050/6070/6080 Cab/2wd (Built Before May 2010)	02988161	11.00-16		18.4-34
NH T6030/6050/6070/6080 Cab/2wd (Built After May 2010)	02991289	11.00-16		18.4-34
NH T6030/6050/6070/6080 Cab/4wd (Built Before May 2010)	02988204		14.9-24	18.4-34
NH T6030/6050/6070/6080 Cab/4wd (Built After May 2010)	02991290		14.9-24	18.4-34

OTHER SPECIFICATIONS

(1) Always use the maximum tire size for favorable ground clearance.
(2) Tractors should not be ordered with armrest-integrated controls.
(3) Tractors must be equipped with flanged rear rims unless otherwise noted.
(4) Right handrail removal may be necessary for boom transport clearance.
(5) John Deere tractors must include a standard through-hood exhaust.
(6) John Deere 7030 series fuel tanks must not exceed 66 gal.
(7) Case-New Holland mount kits include an exhaust relocation feature.

MACHETE FRONT-MOUNT

21' & 24' Models

STANDARD SPECIFICATIONS

- Mounting Rail Frame is Full-Length, 4"x 4"x 5/16" Steel Tubing
- 4"x 4"x 5/16" Steel Tube Mainframe with 4"x 6" x 3/16" Main Structure
- 22-Gallon Hydraulic Reservoir Tank is Mounted Within the Interior of the Frame
- Hydraulic Oil Filter is a 10 Micron Fulter with an ISO Cleanliness Code of 18/13 and a Full Flow of 35 GMP
- Inner Boom Arm 6"x 6" x 1/4" Steel Tubing
- Outer Boom Arm 5"x 5"x 1/4" Steel Tubing
- 125° Boom Swing
- Boom Reach- 21' Machete With 60" Rotary Up-21'7", Out-21'3", Down-12'10"
- Boom Reach- 24' Machete With 60" Rotary Up-24'4", Out-24', Down-15'7"
- Complete Construction of T1 Steel Available
- Piston Pump Rated @ 46 GPM @ 3600 RPM and 5000 PSI
- Front Pump is Idle During Transportation
- The Pump Assembly is Driven by the PTO Shaft
- Single Electronic Controls Five Functions
- Low Shock Start Up and Six Second Shutdown
- Boom Rest is Mounted to the Mower Frame
- Standard (1) year limited parts and labor warranty.

PRODUCT ORDER CODE	DESCRIPTION	APPRX. WEIGHT		LIST PRICE
21' & 24' MACHETE BOOM FRONT-MOUNT FOR TV140 BASE UNITS *(One Choice Required)*				
04210010	21' Machete Boom Front-Mount for NH TV140	6,200		36,729
04240010	24' Machete Boom Front-Mount for NH TV140	6,300		39,012
04210011	21' Machete Boom Front-Mount, T1 Steel, for NH TV140	6,300		38,507
04240011	24' Machete Boom Front-Mount, T1 Steel, for NH TV140	6,400		40,949
MOWER HEAD *(One Choice Required)*				
02968858	Rotary, 60" Machete (Blade Bar)	919		13,978
02970300	Flail, 48" Flail-Axe Piston Brush Cutter	770		12,680
02972460	Flail, 60" Grass Cutter	870		13,308
02972149	5' Timber Cat Sickle Bar	440		10,807
02972150	7' Timber Cat Sickle Bar	520		11,737
02973313	Ditcher-Forward Rotation Only	600		11,841
02974203	90" (4 Blade) BuzzBar Tree Cutter	1,098		15,151
02979249	69" (3 Blade) BuzzBar Tree Cutter	705		12,737
02979265	48" (2 Blade) Buzzbar Tree Cutter	550		10,212
OPTIONS				
02968915	Additional Operators and Parts Manuals			45
02975614	Quick Hitch Kit*			3,561
02975615	Hydraulic Kit for Quick Hitch Head**			473
02975647M	Flail-Axe Jack Stand Kit*** (02975647)			269
02973181	Accumulator Kit - Machete	10		1,462
02979478	Mounting Labor & Oil			6,647
02791800	Special Mower Paint			1,302
00889899MF	Additional 12 Month Warranty (00889899)			2,908

Note: Tractor must include factory installed loader mounting brackets.

** Includes all components to convert boom and (1) head to Quick Hitch*
*** Required to convert additional heads to Quick Hitch*
**** Required to level Flail-Axe for Quick Hitch*

24' MAVERICK BOOM

24' Telescoping Model

STANDARD SPECIFICATIONS

- Bolt-On Undermount with Front and Rear Attached Rails
- Exclusive Slewing Ring Bearing is Featured for Boom Maneuverability
- Standard Boom Structure Made from Alloy Steel, Designed Box Section
- Main Pivot Features 2' Chrome Pins with Greaseable, Hardened Steel Bushings
- Hydraulic Pivot is Featured on Head for Maneuverability.
- Front Axle Mounted Cylinder for Automatic Self-stabilization of Unit
- Self Contained Front Mounted Hydraulic System with CAN Based Data Acquisition
- Self-Cleaning, Thermostatically Controlled Oil-to-Air Cooler
- Ability to Mow Horizontally Within 6" of Rear Tire
- Boom Features Dipper, Lift, and Telescopic Sections
- Boom Reach: Up-21'10", Out-24', Down-14'8"
- 180° Horizontal Boom Swing
- Axle-Mounted Boom Rest
- Joystick, Mount Kit, All Wheel Weight, Polycarbonate Window Included in Base Price
- Tractor Req: Min of 8,500 lbs and 90 HP. Min 90" Wheelbase and 18" Ground Clearance

HEAD SPECIFICATIONS

- 58" Cutting Diameter
- Alloy Deck Material with Double Wall Side Skirt
- 4-1/2"x9" Heat-Treated Alloy Spindle
- 199 HP Motor Direct-Coupled
- 2-1/2" x 5" Stacked Three-Leaf Blade Bar, T1 Steel
- 5/8" x 5" High-Carbon Alloy Steel Blade, 360° Swing
- Standard (1) year limited parts and labor warranty.

PRODUCT ORDER CODE	DESCRIPTION	APPRX. WEIGHT		LIST PRICE
	24' MAVERICK Base Unit *(One Choice Required)*			
04802424	24' Maverick Telescoping Boom	6000		49,974
	MOWER HEAD *(One Choice Required)*			
02981782	60" Rotary w/Ctr Hyd Door, Blade Bar & Head Swivel	919		15,664
02983590	60" Rotary w/Ctr Hyd Door, Blade Bar (No Head Swivel)			13,978
02981783	50" Rotary w/Ctr Hyd Door, Blade Bar & Head Swivel			14,901
02984823	50" Rotary w/Ctr Hyd Door, Blade Pan & Head Swivel			14,141
02983554	48" Flail-Axe (No Head Swivel)	770		12,680
02984371	48" Flail-Axe w/Head Swivel			14,367
02983586	48" Flail-Axe, SHD Cuttershaft (3 oz Knives)			13,948
02983560	60" HD Grass Flail (No Head Swivel)	870		13,308
02985449	60" HD Grass Flail w/Head Swivel			14,995
02983548	5' Timber Cat Sickle Bar	440		10,807
02983549	7' Timber Cat Sickle Bar	520		11,737
02983555	90" (4 Blade) Buzzbar Tree Cutter	1098		12,352
02983556	69" (3 Blade) BuzzBar Tree Cutter	705		12,737
02983557	48" (2 Blade) Buzzbar Tree Cutter	550		10,212
02982531	Ditcher Head (Hitch Post Mounted)			11,841
	OPTIONS			
02981992A	Additional Operators and Parts Manuals			45
02989463	Quick Hitch Kit*			3,285
02989464	Hydraulic Kit for Quick Hitch Head**			435
02975647M	Flail-Axe Jack Stand Kit*** (02975647)			269
02984400	HD Grass Flail Jack Stand Kit***			278
02984407	JD6615/6715/7220/7320/7130/7230 Oil Cooler Brush Grd			557
02982002	Mounting Labor & Oil			6,919
02791800MV	Special Mower Paint (02791800)			1,335
02968967	Special Tractor Paint			5,802
00889899MV	Additional 12 Month Warranty (00889899)			4,207

** Includes all components to convert boom and (1) head to Quick Hitch*
*** Required to convert additional heads to Quick Hitch*
**** Required to level flail head for Quick Hitch*

ALAMO INDUSTRIAL
(800) 882-5762

Prices Effective February 11, 2011

30' MAVERICK BOOM

30' Telescoping Model

STANDARD SPECIFICATIONS

- Bolt-On Undermount with Front and Rear Attached Rails
- Exclusive Slewing Ring Bearing is Featured for Boom Maneuverability
- Standard Boom Structure Made from Alloy Steel, Designed Box Section
- Main Pivot Features 2' Chrome Pins with Greaseable, Hardened Steel Bushings
- Hydraulic Pivot is Featured on Head for Maneuverability.
- Front Axle Mounted Cylinder for Automatic Self-stabilization of Unit
- Self Contained Front Mounted Hydraulic System with CAN Based Data Acquisition
- Self-Cleaning, Thermostatically Controlled Oil-to-Air Cooler
- Ability to Mow Horizontally within 6" of Rear Tire
- Boom Features Dipper, Lift, and Telescopic Sections
- Boom Reach: Up-27'10", Out-30', Down-19'3"
- 180° Horizontal Boom Swing
- Axle-Mounted Boom Rest
- Joystick, Mount Kit, All Wheel Weight, Polycarbonate Window Included in Base Price
- Tractor Req: Min of 8,500 lbs and 90 HP. Min 90" Wheelbase and 18" Ground Clearance

HEAD SPECIFICATIONS

- 58" Cutting Diameter
- Alloy Deck Material with Double Wall Side Skirt
- 4-1/2"x9" Heat-Treated Alloy Spindle
- 199 HP Motor Direct-Coupled
- 2-1/2" x 5" Stacked Three-Leaf Blade Bar, T1 Steel
- 5/8" x 5" High-Carbon Alloy Steel Blade, 360° Swing
- Standard (1) year limited parts and labor warranty.

PRODUCT ORDER CODE	DESCRIPTION	APPRX. WEIGHT		LIST PRICE
	30' MAVERICK Base Unit *(One Choice Required)*			
04803024	30' Maverick Telescoping Boom	7500		54,392
	MOWER HEAD *(One Choice Required)*			
02981782	60" Rotary w/Ctr Hyd Door, Blade Bar & Head Swivel	919		15,664
02983590	60" Rotary w/Ctr Hyd Door, Blade Bar (No Head Swivel)			13,978
02981783	50" Rotary w/Ctr Hyd Door, Blade Bar & Head Swivel			14,901
02984823	50" Rotary w/Ctr Hyd Door, Blade Pan & Head Swivel			14,141
02983554	48" Flail-Axe (No Head Swivel)	770		12,680
02984371	48" Flail-Axe w/Head Swivel			14,367
02983586	48" Flail-Axe, SHD Cuttershaft (3 oz Knives)			13,948
02983560	60" HD Grass Flail (No Head Swivel)	870		13,308
02985449	60" HD Grass Flail w/Head Swivel			14,995
02983548	5' Timber Cat Sickle Bar	440		10,807
02983549	7' Timber Cat Sickle Bar	520		11,737
02983556	69" (3 Blade) BuzzBar Tree Cutter	705		12,737
02983557	48" (2 Blade) Buzzbar Tree Cutter	550		10,212
	OPTIONS			
02981992A	Additional Operators and Parts Manuals			45
02989463	Quick Hitch Kit*			3,285
02989464	Hydraulic Kit for Quick Hitch Head**			435
02975647M	Flail-Axe Jack Stand Kit*** (02975647)			269
02984400	HD Grass Flail Jack Stand Kit***			278
02984407	JD6615/6715/7220/7320/7130/7230 Oil Cooler Brush Grd			557
02982002	Mounting Labor & Oil			6,919
02791800MV	Special Mower Paint (02791800)			1,335
02968967	Special Tractor Paint			5,802
00889899MV	Additional 12 Month Warranty (00889899)			4,207

** Includes all components to convert boom and (1) head to Quick Hitch*
*** Required to convert additional heads to Quick Hitch*
**** Required to level flail head for Quick Hitch*

24' MAVERICK

MOUNT KIT OPTIONS

TRACTOR DESCRIPTION	MOUNT KIT	MAXIMUM TIRE SIZE	
		FRONT	REAR
Case IH			
Case-IH MXU100/110 Cab/4wd	02982358	14.9-24	18.4-34
Case-IH MXU115/125/130/135 Cab/4wd	02982341	14.9-24	18.4-34
Case-IH Maxxum 110/110 Pro/120 Pro/130 Pro	02986046	14.9-24	18.4-34
Case-IH Maxxum 115/125/125 Pro/140 Pro	02986049	14.9-24	18.4-34
Challenger			
Challenger MT445B/455B/465B Cab/4wd (Tier III Engine Only)	02990779	14.9-24	18.4-34
John Deere			
JD 6215/6415 Cab/4wd	02982548	13.6-24	18.4-34
JD 6220/6320/6420 (Tier II) Cab/4wd	02982577	13.6-24	18.4-34
JD 6230/6330/6430 "Mid Spec" Cab/4wd	02986011	13.6-24	18.4-34
JD 6615/6715 Cab/4wd	02982450	13.6-24	18.4-34
JD 7210/7410/7510 Cab/4wd	02985971	13.6-28	18.4-34
JD 7220/7320 Cab/4wd (34" Flanged Rear Whl)	02983364	13.6-28	18.4-34
JD 7220/7320 Cab/4wd (38" Flanged Rear Whl)	02985173	14.9-28	18.4-38
JD 7220/7320 Cab/4wd (38" Rack & Pinion Whl)	02983920	14.9-28	18.4-38
JD 7130/7230 "Mid" Cab/4wd (4 or 6 cyld / 55 gal. fuel tank)	02987697	13.6-28	18.4-38
JD 7130/7230 "Prem" Cab/4wd (6 cyld / 55 gal. fuel tank / Flanged Rear Whl / Built Before Nov. 1, 2010)	02986620	14.9-28	18.4-38
JD 7130/7230 "Prem" Cab/4wd (6 cyld / 55 gal. fuel tank / Rack & Pinion Rear Whl / Built Before Nov. 1, 2010)	02990148	14.9-28	18.4-38
JD 7130/7230 "Prem" Cab/4wd (6 cyld IVT / 55 gal. fuel tank / Flanged Rear Whl / Built Before Nov. 1, 2010)	02986829	14.9-28	18.4-38
Massey Ferguson			
MF 5460 Cab/4wd (Tier II Engine Only)	02988138	14.9-24	18.4-34
MF 5465 Cab/4wd (Tier II Engine Only)	02983605	14.9-24	18.4-34
MF 5465/5475 Cab/4wd (Tier III Perkins Engine Only)	02991112	14.9-28	18.4-38
MF 5465/5475 Cab/4wd (Tier III Sisu Engine Only)	02991353	14.9-28	18.4-38
New Holland			
NH TS100A/110A Cab/4wd	02982358	14.9-24	18.4-34
NH TS115A/125A/130A/135A Cab/4wd	02982341	14.9-24	18.4-34
NH T6010/6020/6040/6060 Cab/4wd (Built Before May 2010)	02986046	14.9-24	18.4-34
NH T6010/6020/6040/6060 Cab/4wd (Built After May 2010)	02991292	14.9-24	18.4-34
NH T6030/6050/6070 Cab/4wd (Built Before May 2010)	02986049	14.9-24	18.4-34
NH T6030/6050/6070 Cab/4wd (Built After May 2010)	02991293	14.9-24	18.4-34

OTHER SPECIFICATIONS

(1) Always use the maximum tire size for favorable ground clearance.
(2) Mount kits are designed for use with 4wd tractors only.
(3) Tractors should not be ordered with armrest-integrated controls.
(4) Tractors must be equipped with flanged rear rims unless otherwise noted.
(5) The right handrail must be removed for boom transport clearance.
(6) John Deere tractors must include a standard through-hood exhaust.
(7) Case-New Holland mount kits include an exhaust relocation feature.

30' MAVERICK

MOUNT KIT OPTIONS

TRACTOR DESCRIPTION	MOUNT KIT	MAXIMUM TIRE SIZE	
		FRONT	REAR
Case IH			
Case-IH MXU115/125/130/135 Cab/4wd	02981892	14.9-24	18.4-34
Case-IH Maxxum 115/125/125 Pro/140 Pro	02986052	14.9-24	18.4-34
Challenger			
Challenger MT475B Cab/4wd (Tier III)	02989840	14.9-28	18.4-38
John Deere			
JD 6615/6715 Cab/4wd	02982395	13.6-24	18.4-34
JD 7210/7410/7510 Cab/4wd (34" Flanged Rear Rim)	02984191	13.6-28	18.4-34
JD 7220/7320 Cab/4wd (34" Flanged Rear Whl)	02983096	13.6-28	18.4-34
JD 7220/7320 Cab/4wd (38" Flanged Rear Whl)	02984772	14.9-28	18.4-38
JD 7220/7320 Cab/4wd (38" Rack & Pinion Whl)	02984684	14.9-28	18.4-38
JD 7130 "Mid" Cab/4wd (4 cyld / 55 gal. fuel tank)	02989932	13.6-28	18.4-38
JD 7130/7230 "Mid" Cab/4wd (6 cyld / 55 gal. fuel tank)	02986363	13.6-28	18.4-38
JD 7130/7230 "Prem" Cab/4wd (6 cyld / 55 gal. fuel tank / Flanged Rear Whl / Built Before Nov. 1, 2010)	02986617	14.9-28	18.4-38
Massey Ferguson			
MF 5465 Cab/4wd (Tier II Engine Only)	02984419	14.9-24	18.4-34
MF 5465/5475 Cab/4wd (Tier III Perkins Engine Only)	02988639	14.9-28	18.4-38
MF 5465/5475 Cab/4wd (Tier III Sisu Engine Only)	02991559	14.9-28	18.4-38
New Holland			
NH TS115A/125A/130A/135A Cab/4wd	02981892	14.9-24	18.4-34
NH T6030/6050/6070 Cab/4wd (Built Before May 2010)	02986052	14.9-24	18.4-34
NH T6030/6050/6070 Cab/4wd (Built After May 2010)	02991294	14.9-24	18.4-34

OTHER SPECIFICATIONS

(1) Always use the maximum tire size for favorable ground clearance.
(2) Mount kits are designed for use with 4wd tractors only.
(3) Tractors should not be ordered with armrest-integrated controls.
(4) Tractors must be equipped with flanged rear rims unless otherwise noted.
(5) The right handrail must be removed for boom transport clearance.
(6) John Deere tractors must include a standard through-hood exhaust.
(7) Case-New Holland mount kits include an exhaust relocation feature.

REAR MOUNT BOOMS

17', 20', & 23' Articulated Boom Mowers

STANDARD SPECIFICATIONS

- Welded Steel Plate Frame Mounted to the Rear Axle and Three-Point Hitch
- 60-Gallon Hydraulic Reservoir with 12 Micron Filtration
- 4" King Post with 3" Tapered Roller Bearings
- Inner Boom Arm 6"x 6" x 1/4" Steel Tubing
- Outer Boom Arm 5"x 5" x 1/4" Steel Tubing
- 120° Horizontal Boom Swing
- Boom Reaches:
  - 17: Up-19'6", Out- 18'9", Down- 8'9"
  - 20: Up-20'3", Out- 21', Down- 12'11"
  - 23: Up-22'10", Out- 22'4", Down- 15'6"
- Stacked Hydraulic Pump @ 51 GPM @ 2500 PSI
- 4-Spool, Open Center, Tapered Positive Metering Valve
- Safety Cage (ROPS Units ONLY)
- Tractor Req: Min. 5,000 lbs. with 65 HP rating
- Mount Kit & Polycarbonate Window Included in Base Price
- Front End Weight to be Supplied by the End User.

HEAD SPECIFICATIONS

- 60" Boom-Axe Head
- 10-Gauge Top Deck with 1/4" Side Skirts
- Full Length Replaceable Skid Shoes
- 4-1/2"x 9" Heat-Treated Alloy Spindle
- 101 HP Motor Direct-Coupled
- 2-1/2"x 5" Stacked Three-Leaf Blade Bar, T1 Steel
- 5/8"x 5" High-Alloy Steel Blade, 360° Swing
- Front & Rear Safety Deflectors & Gate
- Standard (1) year limited parts and labor warranty.

PRODUCT ORDER CODE	DESCRIPTION	APPRX. WEIGHT		LIST PRICE
	REAR MOUNT BASE UNIT *(One Choice Required)*			
04912217	17' Rear-Mount Boom Assembly	6000		28,673
04912218	20' Rear-Mount Boom Assembly	6100		30,563
04912219	23' Rear-Mount Boom Assembly	6200		31,926
	MOWER HEAD *(One Choice Required)*			
02974676	60" Boom-Axe with Bar	820		9,883
02974680	50" Boom-Axe with Pan	810		10,136
02974681	50" Boom-Axe with Bar	750		9,649
02970299	48" Flail Axe	700		11,571
02963870	60" SHD Flail	760		10,732
02974204	90" Buzzbar Head	1098		15,225
02979250	69" Buzzbar Head	705		12,799
02979266	48" Buzzbar Head	550		10,262
02972145	5' Timbercat	440		11,354
02972146	7' Timbercat	520		12,090
	MOUNT KIT *(One Choice Required)*			
RM-01	NH 5610,6610,7610,5640,6640,7740 (Includes 02963021, 00751562, 02963819, 02963501)			N/C
RM-02	NH 5640,6640,7740 with CAB (Includes 02965837, 00751562, 02963501)			N/C
RM-03	NH 5610, 6610, 7610 Series II with CAB (Includes 02962115, 00751562, 02963501)			N/C
RM-04	John Deere 6020/6030/7020/7030 Series Cab (Includes 02975041, 00765452, 02963501)			N/C
RM-05	Universal (Dealer Must Modify) (Includes 02964379, 00751565, 02963819, 02963501)			N/C
RM-06	Universal (Dealer Must Modify) (Includes 02964379, 00751565, 02963501, 02964333)			N/C

REAR MOUNT BOOMS

17', 20', & 23' Articulated Boom Mowers

PRODUCT ORDER CODE	DESCRIPTION	APPRX. WEIGHT		LIST PRICE
	OPTIONS			
02924700	Additional Operators and Parts Manuals			45
02976534	Quick Hitch Kit*			2,635
02976535	Hydraulic Kit for Quick Hitch Head**			450
02975647M	Flail-Axe Jack Stand Kit*** (02975647)			269
02959639	Caster Wheel Kit, Super Heavy Duty Flail	24		1,401
02975805R	Retro Kit for Joystick (02975805) - Field Install			9,955
02972609	Wheel Weight Kit-500 lbs.	500		1,170
02971789	Wheel Weight Kit-1300 lbs.	1300		2,505
02976671	Additional 408 lbs. Kit for 1300 lbs. Wheel Weight	408		1,326
02976670	Additional 680 lbs. Kit for 1300 lbs. Wheel Weight	680		1,966
02963038	Mounting Labor & Oil			7,542
02791800	Special Mower Paint			1,302
02968967	Special Tractor Paint			5,802
00889899RW	Additional 12 Month Warranty (00889899)			2,524

** Includes all components to convert boom and (1) head to Quick Hitch*
****Required to level Flail-Axe for Quick Hitch*
**** Required to level Flail-Axe for Quick Hitch*

18' SAMURAI BOOM

18' Articulated Model

STANDARD SPECIFICATIONS

- 4" X 4" Square Tubular Frame
- Features a 2 1/2" greaseable "king post" style turning arm.
- Main pivots points utilize 2' pins with greaseable, hardened steel bushings.
- Self contained hydraulic system w/integrated oil cooler.
- 20 gal Front-Mounted Reservoir/35 gal Total System Volume
- Motor Circuit: Gear Pump Rated @ 30 gpm (66.5 hp) & 3,800 psi @ 2,200 rpm.
- Control Circuit: Gear Pump Rated @ 12 gpm (21 hp) & 3,000 psi @ 2,200 rpm.
- Inner Boom Arm 6"x6"x1/4" Alloy Steel Tubing
- Outer Boom Arm 5"x5"x1/4" Alloy Steel Tubing
- 120° Horizontal Boom Swing
- Boom Reach: Up-18' 7", Out-18', Down-5' 1".
- Mount Kit, Wheel Weight, and Polycarbonate Window Included in Base Price
- Tractor Req: Min of 8,500 lbs and 90 eng. hp. Min 90" Wheelbase and 18" Ground Clearance

HEAD SPECIFICATIONS

- 58" Cutting Diameter
- Alloy Deck Material with Double Wall Side Skirt
- 4-1/2"x9" Heat-Treated Alloy Spindle
- 152 HP Direct-Coupled Gear Motor
- Stacked Three-Leaf, Alloy Steel Blade Bar
- 5/8" x 5" Double -Edged, Tempered Steel Blades, 360° Swing
- Standard (1) year limited parts and labor warranty.

PRODUCT ORDER CODE	DESCRIPTION	APPRX. WEIGHT		LIST PRICE
	18' Base Unit *(One Choice Required)*			
04851801	18' Samurai Boom - 2wd w/Cable			31,915
04851803	18' Samurai Boom - 4wd w/Cable			31,915
04851800	18' Samurai Boom - 2wd w/Joystick			37,969
04851802	18' Samurai Boom - 4wd w/Joystick			37,969
	MOWER HEAD *(One Choice Required)*			
02986190SJ	60" Rotary w/Ctr Hyd Door, Blade Bar & Head Swivel (Joystick Remote) Includes 02986190 & 02987811	1115		13,582
02986190SC	60" Rotary w/Ctr Hyd Door, Blade Bar & Head Swivel (Cable) Includes 02986190 & 02987832	1115		13,582
02986203	60" Rotary w/Ctr Hyd Door, Blade Bar (No Head Swivel)	1061		11,708
02986213SJ	50" Rotary w/Ctr Hyd Door, Blade Bar & Head Swivel (Joystick Remote) Includes 02986213 & 02987811			12,937
02986213SC	50" Rotary w/Ctr Hyd Door, Blade Bar & Head Swivel (Cable) Includes 02986213 & 02987832			12,937
02986211	50" Rotary w/Ctr Hyd Door, Blade Bar (No Head Swivel)			11,063
02986212SJ	50" Rotary w/Ctr Hyd Door, Blade Pan & Head Swivel (Joystick Remote) Includes 02986212 & 02987811			12,176
02986212SC	50" Rotary w/Ctr Hyd Door, Blade Pan & Head Swivel (Cable) Includes 02986212 & 02987832			12,176
02986210	50" Rotary w/Ctr Hyd Door, Blade Pan (No Head Swivel)			10,302
02986251SJ	48" Flail-Axe w/Head Swivel (Joystick Remote) Includes 02986251 & 02987811			13,444
02986251SC	48" Flail-Axe w/Head Swivel (Cable) Includes 02986251 & 02987832			13,444
02986253	48" Flail-Axe (No Head Swivel)	777		11,571
02986252SJ	48" Flail-Axe, SHD Cuttershaft (3 oz Knives) w/Head Swivel (Joystick Remote) Includes 02986252 & 02987811			14,544
02986252SC	48" Flail-Axe, SHD Cuttershaft (3 oz Knives) w/Head Swivel (Cable) Includes 02986252 & 02987832			14,544

18' SAMURAI BOOM

18' Articulated Model

PRODUCT ORDER CODE	DESCRIPTION	APPRX. WEIGHT		LIST PRICE
MOWER HEAD (Continued) *(One Choice Required)*				
02988228	48" Grass Flail, SHD Cuttershaft			12,670
02988229	60" Grass Flail, SHD Cuttershaft	800		12,771
02988255	5' Timber Cat Sickle Bar	682		12,136
02988256	7' Timber Cat Sickle Bar	770		12,892
02986235	90" Buzzbar (4 Blade)	1098		14,422
02986229	69" Buzzbar (3 Blade)	705		12,800
02986219	48" Buzzbar (2 Blade)	550		10,262
02988854	Ditcher Head (Hitch Post Mounted)			11,898
OPTIONS				
02986950A	Additional Operators and Parts Manuals			45
02989326	Quick Hitch Kit*			3,650
02989327	Hydraulic Kit for Quick Hitch Head**			484
02975647	Flail-Axe Jack Stand Kit***			299
02985029	Mounting Labor & Oil			6,560
02791800	Special Mower Paint			1,302
02968967	Special Tractor Paint			5,802
00889899S	Additional 12 Month Warranty (00889899)			2,944

** Includes all components to convert boom and (1) head to Quick Hitch*
*** Required to convert additional heads to Quick Hitch*
**** Required to level Flail-Axe for Quick Hitch*

22' SAMURAI BOOM

22' Articulated Model

STANDARD SPECIFICATIONS

- 4" X 4" Square Tubular Frame
- Features a 2 1/2" greaseable "king post" style turning arm.
- Main pivots points utilize 2' pins with greaseable, hardened steel bushings.
- Self contained hydraulic system w/integrated oil cooler.
- 20 gal Front-Mounted Reservoir/35 gal Total System Volume
- Motor Circuit: Gear Pump Rated @ 30 gpm (66.5 hp) & 3,800 psi @ 2,200 rpm.
- Control Circuit: Gear Pump Rated @ 12 gpm (21 hp) & 3,000 psi @ 2,200 rpm.
- Inner Boom Arm 6"x6"x1/4" Alloy Steel Tubing
- Outer Boom Arm 5"x5"x1/4" Alloy Steel Tubing
- 120° Horizontal Boom Swing
- Boom Reach: Up-22' 7", Out-22', Down-9' 1".
- Mount Kit, Wheel Weight, and Polycarbonate Window Included in Base Price
- Tractor Req: Min of 8,500 lbs and 90 eng. hp. Min 90" Wheelbase and 18" Ground Clearance

HEAD SPECIFICATIONS

- 58" Cutting Diameter
- Alloy Deck Material with Double Wall Side Skirt
- 4-1/2"x9" Heat-Treated Alloy Spindle
- 152 HP Direct-Coupled Gear Motor
- Stacked Three-Leaf, Alloy Steel Blade Bar
- 5/8" x 5" Double -Edged, Tempered Steel Blades, 360° Swing
- Standard (1) year limited parts and labor warranty.

PRODUCT ORDER CODE	DESCRIPTION	APPRX. WEIGHT		LIST PRICE
	22' Base Unit *(One Choice Required)*			
04852201	22' Samurai Boom - 2wd w/Cable			33,078
04852203	22' Samurai Boom - 4wd w/Cable			33,078
04852200	22' Samurai Boom - 2wd w/Joystick			39,131
04852202	22' Samurai Boom - 4wd w/Joystick			39,131
	MOWER HEAD *(One Choice Required)*			
02986190SJ	60" Rotary w/Ctr Hyd Door, Blade Bar & Head Swivel (Joystick Remote) Includes 02986190 & 02987811	1,115		13,582
02986190SC	60" Rotary w/Ctr Hyd Door, Blade Bar & Head Swivel (Cable) Includes 02986190 & 02987832	1,115		13,582
02986203	60" Rotary w/Ctr Hyd Door, Blade Bar (No Head Swivel)	1,061		11,708
02986213SJ	50" Rotary w/Ctr Hyd Door, Blade Bar & Head Swivel (Joystick Remote) Includes 02986213 & 02987811			12,937
02986213SC	50" Rotary w/Ctr Hyd Door, Blade Bar & Head Swivel (Cable) Includes 02986213 & 02987832			12,937
02986211	50" Rotary w/Ctr Hyd Door, Blade Bar (No Head Swivel)			11,063
02986212SJ	50" Rotary w/Ctr Hyd Door, Blade Pan & Head Swivel (Joystick Remote) Includes 02986212 & 02987811			12,176
02986212SC	50" Rotary w/Ctr Hyd Door, Blade Pan & Head Swivel (Cable) Includes 02986212 & 02987832			12,176
02986210	50" Rotary w/Ctr Hyd Door, Blade Pan (No Head Swivel)			10,302
02986251SJ	48" Flail-Axe w/Head Swivel (Joystick Remote) Includes 02986251 & 02987811			13,444
02986251SC	48" Flail-Axe w/Head Swivel (Cable) Includes 02986251 & 02987832			13,444
02986253	48" Flail-Axe (No Head Swivel)	777		11,571
02986252SJ	48" Flail-Axe, SHD Cuttershaft (3 oz Knives) w/Head Swivel (Joystick Remote) Includes 02986252 & 02987811			14,544
02986252SC	48" Flail-Axe, SHD Cuttershaft (3 oz Knives) w/Head Swivel (Cable) Includes 02986252 & 02987832			14,544

22' SAMURAI BOOM

22' Articulated Model

PRODUCT ORDER CODE	DESCRIPTION	APPRX. WEIGHT		LIST PRICE
MOWER HEAD (Continued) *(One Choice Required)*				
02988228	48" Grass Flail, SHD Cuttershaft			12,670
02988229	60" Grass Flail, SHD Cuttershaft	800		12,771
02988255	5' Timber Cat Sickle Bar	682		12,136
02988256	7' Timber Cat Sickle Bar	770		12,892
02986235	90" Buzzbar (4 Blade)	1,098		14,422
02986229	69" Buzzbar (3 Blade)	705		12,800
02986219	48" Buzzbar (2 Blade)	550		10,262
02988854	Ditcher Head (Hitch Post Mounted)			11,898
OPTIONS				
02986950A	Additional Operators and Parts Manuals			45
02989326	Quick Hitch Kit*			3,650
02989327	Hydraulic Kit for Quick Hitch Head**			484
02975647	Flail-Axe Jack Stand Kit***			299
02985029	Mounting Labor & Oil			6,560
02791800	Special Mower Paint			1,302
02968967	Special Tractor Paint			5,802
00889899S	Additional 12 Month Warranty (00889899)			2,944

** Includes all components to convert boom and (1) head to Quick Hitch*
*** Required to convert additional heads to Quick Hitch*
**** Required to level Flail-Axe for Quick Hitch*

25' SAMURAI BOOM

25' Articulated Model

STANDARD SPECIFICATIONS

- 4" X 4" Square Tubular Frame
- Features a 2 1/2" greaseable "king post" style turning arm.
- Main pivots points utilize 2' pins with greaseable, hardened steel bushings.
- Self contained hydraulic system w/integrated oil cooler.
- 20 gal Front-Mounted Reservoir/35 gal Total System Volume
- Motor Circuit: Gear Pump Rated @ 30 gpm (66.5 hp) & 3,800 psi @ 2,200 rpm.
- Control Circuit: Gear Pump Rated @ 12 gpm (21 hp) & 3,000 psi @ 2,200 rpm.
- Inner Boom Arm 6"x6"x1/4" Alloy Steel Tubing
- Outer Boom Arm 5"x5"x1/4" Alloy Steel Tubing
- 120° Horizontal Boom Swing
- Boom Reach: Up-25' 7", Out-25', Down-12' 1".
- Mount Kit, Wheel Weight, and Polycarbonate Window Included in Base Price
- Tractor Req: Min of 8,500 lbs and 90 eng. hp. Min 90" Wheelbase and 18" Ground Clearance

HEAD SPECIFICATIONS

- 58" Cutting Diameter
- Alloy Deck Material with Double Wall Side Skirt
- 4-1/2"x9" Heat-Treated Alloy Spindle
- 152 HP Direct-Coupled Gear Motor
- Stacked Three-Leaf, Alloy Steel Blade Bar
- 5/8" x 5" Double -Edged, Tempered Steel Blades, 360° Swing
- Standard (1) year limited parts and labor warranty.

PRODUCT ORDER CODE	DESCRIPTION	APPRX. WEIGHT		LIST PRICE
	25' Base Unit *(One Choice Required)*			
04852501	25' Samurai Boom - 2wd w/Cable			35,140
04852503	25' Samurai Boom - 4wd w/Cable			35,140
04852500	25' Samurai Boom - 2wd w/Joystick			41,194
04852502	25' Samurai Boom - 4wd w/Joystick			41,194
	MOWER HEAD *(One Choice Required)*			
02986190SJ	60" Rotary w/Ctr Hyd Door, Blade Bar & Head Swivel (Joystick Remote) Includes 02986190 & 02987811	1,115		13,582
02986190SC	60" Rotary w/Ctr Hyd Door, Blade Bar & Head Swivel (Cable) Includes 02986190 & 02987832	1,115		13,582
02986203	60" Rotary w/Ctr Hyd Door, Blade Bar (No Head Swivel)	1,061		11,708
02986213SJ	50" Rotary w/Ctr Hyd Door, Blade Bar & Head Swivel (Joystick Remote) Includes 02986213 & 02987811			12,937
02986213SC	50" Rotary w/Ctr Hyd Door, Blade Bar & Head Swivel (Cable) Includes 02986213 & 02987832			12,937
02986211	50" Rotary w/Ctr Hyd Door, Blade Bar (No Head Swivel)			11,063
02986212SJ	50" Rotary w/Ctr Hyd Door, Blade Pan & Head Swivel (Joystick Remote) Includes 02986212 & 02987811			12,176
02986212SC	50" Rotary w/Ctr Hyd Door, Blade Pan & Head Swivel (Cable) Includes 02986212 & 02987832			12,176
02986210	50" Rotary w/Ctr Hyd Door, Blade Pan (No Head Swivel)			10,302
02986251SJ	48" Flail-Axe w/Head Swivel (Joystick Remote) Includes 02986251 & 02987811			13,444
02986251SC	48" Flail-Axe w/Head Swivel (Cable) Includes 02986251 & 02987832			13,444
02986253	48" Flail-Axe (No Head Swivel)	777		11,571
02986252SJ	48" Flail-Axe, SHD Cuttershaft (3 oz Knives) w/Head Swivel (Joystick Remote) Includes 02986252 & 02987811			14,544
02986252SC	48" Flail-Axe, SHD Cuttershaft (3 oz Knives) w/Head Swivel (Cable) Includes 02986252 & 02987832			14,544

25' SAMURAI BOOM

25' Articulated Model

PRODUCT ORDER CODE	DESCRIPTION	APPRX. WEIGHT		LIST PRICE
MOWER HEAD (Continued) *(One Choice Required)*				
02988228	48" Grass Flail, SHD Cuttershaft			12,670
02988229	60" Grass Flail, SHD Cuttershaft	800		12,771
02988255	5' Timber Cat Sickle Bar	682		12,136
02988256	7' Timber Cat Sickle Bar	770		12,892
02986235	90" Buzzbar (4 Blade)	1,098		14,422
02986229	69" Buzzbar (3 Blade)	705		12,800
02986219	48" Buzzbar (2 Blade)	550		10,262
02988854	Ditcher Head (Hitch Post Mounted)			11,898
OPTIONS				
02986950A	Additional Operators and Parts Manuals			45
02989326	Quick Hitch Kit*			3,650
02989327	Hydraulic Kit for Quick Hitch Head**			484
02975647	Flail-Axe Jack Stand Kit***			299
02985029	Mounting Labor & Oil			6,560
02791800	Special Mower Paint			1,302
02968967	Special Tractor Paint			5,802
00889899S	Additional 12 Month Warranty (00889899)			2,944

** Includes all components to convert boom and (1) head to Quick Hitch*
*** Required to convert additional heads to Quick Hitch*
**** Required to level Flail-Axe for Quick Hitch*

18', 22' & 25' SAMURAI

MOUNT KIT OPTIONS

TRACTOR DESCRIPTION	MOUNT KIT	MAXIMUM TIRE SIZE		
		2WD Front	4WD Front	Rear
Case IH				
Case-IH Maxxum 110/110 Pro/120 Pro/130 Pro ROPS/2wd (Cable)	02988516	10.00-16		18.4-34
Case-IH Maxxum 110/110 Pro/120 Pro/130 Pro Canopy/2wd (Cable)	02988512	10.00-16		18.4-34
Case-IH Maxxum 110/110 Pro/120 Pro/130 Pro Cab/2wd (Cable)	02988517	10.00-16		18.4-34
Case-IH Maxxum 110/110 Pro/120 Pro/130 Pro Cab/4wd (Cable)	02987836		14.9-24	18.4-34
Case-IH Maxxum 110/110 Pro/120 Pro/130 Pro Cab/2wd (Joystick)	02988519	10.00-16		18.4-34
Case-IH Maxxum 110/110 Pro/120 Pro/130 Pro Cab/4wd (Joystick)	02987863		14.9-24	18.4-34
Case-IH Maxxum 115/125/125 Pro/140 Pro Cab/4wd (Cable)	02988242		14.9-24	18.4-34
Case-IH Maxxum 115/125/125 Pro/140 Pro Cab/4wd (Joystick)	02988241		14.9-24	18.4-34
Case-IH Maxxum 115/125/125 Pro/140 Pro ROPS/2wd (Cable)	02989875	10.00-16		18.4-34
Challenger				
Challenger MT445B/455B/465B Cab/2wd (Tier III Engine Only / Frt Axle Stabilizer Not Incl. /Cable)	02990186	10.00-16		18.4-34
Challenger MT445B/455B/465B Cab/4wd (Tier III Engine Only / Cable)	02989997		14.9-24	18.4-34
Challenger MT445B/455B/465B Cab/2wd (Tier III Engine Only / Frt Axle Stabilizer Not Incl. / Joystick)	02990188	10.00-16		18.4-34
Challenger MT445B/455B/465B Cab/4wd (Tier III Engine Only / Joystick)	02990793		14.9-24	18.4-34
John Deere				
JD 6110/6210/6310/6405/6410 Cab/2wd (Frt Axle Stabilizer Not Incl. / Joystick)	02988769	10.00-16		18.4-34
JD 6110/6210/6310/6405/6410 Cab/4wd (Frt Axle Stabilizer Not Incl. / Joystick)	02988769		12.4-24	18.4-34
JD 6120/6215/6220/6320/6415/6420 Cab/4wd (Joystick)	02988766		12.4-24	18.4-34
JD 6120/6215/6220/6320/6415/6420 ROPS/2wd (Cable)	02989021	10.00-16		18.4-34
JD 6230/6330/6430 "Mid-Spec" Cab/2wd (Cable)	02988392	10.00-16		18.4-34
JD 6230/6330/6430 "Mid-Spec" Cab/4wd (Cable)	02987668		13.6-24	18.4-34
JD 6230/6330/6430 "Mid-Spec" Cab/2wd (Joystick)	02987787	10.00-16		18.4-34
JD 6230/6330/6430 "Mid-Spec" Cab/4wd (Joystick)	02987809		13.6-24	18.4-34
JD 6230/6330/6430 "Mid-Spec" ROPS/2wd (Cable)	02989255	10.00-16		18.4-34
JD 6230/6330/6430 "Mid-Spec" ROPS/4wd (Cable)	02988182		13.6-24	18.4-34
JD 6230/6330/6430 "Mid-Spec" Canopy/4wd (Cable)	02988506		13.6-24	18.4-34
JD 6230/6330/6430 "Mid-Spec" ROPS/4wd (Joystick)	02988180		13.6-24	18.4-34
JD 7210/7410/7510 Cab/2wd (Cable)	02987707	11.00-16		18.4-34
JD 7130/7230 "Mid-Spec" Cab/2wd (Frt Axle Stabilizer Not Incl. / Joystick)	02991302	11.00-16		18.4-38
JD 7130/7230 "Mid-Spec" Cab/4wd (Cable)	02987845		13.6-28	18.4-38
JD 7130/7230 "Mid-Spec" Cab/4wd (Joystick)	02990032		13.6-28	18.4-38
Massey Ferguson				
MF 5465/5475 Cab/4wd (Tier III Engine Only - Cable)	02988061		14.9-24	18.4-34
MF 5465/5475 Cab/4wd (Tier III Engine Only - Joystick)	02988004		14.9-24	18.4-34

18', 22' & 25' SAMURAI

MOUNT KIT OPTIONS

TRACTOR DESCRIPTION	MOUNT KIT	MAXIMUM TIRE SIZE		
		2WD Front	4WD Front	Rear
New Holland				
NH 5640/6640/7740 Cab/2wd (Cable)	02989656	10.00-16		18.4-34
NH T6020/6040/6060 ROPS/2wd (Cable)	02988516	10.00-16		18.4-34
NH T6020/6040/6060 Canopy/2wd (Cable)	02988512	10.00-16		18.4-34
NH T6020/6040/6060 Cab/2wd (Built Before May 2010 / Cable)	02988517	10.00-16		18.4-34
NH T6020/6040/6060 Cab/2wd (Built After May 2010 / Cable)	02991296	10.00-16		18.4-34
NH T6020/6040/6060 Cab/4wd (Built Before May 2010 / Cable)	02987836		14.9-24	18.4-34
NH T6020/6040/6060 Cab/4wd (Built After May 2010 / Cable)	02991298		14.9-24	18.4-34
NH T6020/6040/6060 Cab/2wd (Built Before May 2010 / Joystick)	02988519	10.00-16		18.4-34
NH T6020/6040/6060 Cab/2wd (Built After May 2010 / Joystick)	02991297	10.00-16		18.4-34
NH T6020/6040/6060 Cab/4wd (Built Before May 2010 / Joystick)	02987863		14.9-24	18.4-34
NH T6020/6040/6060 Cab/4wd (Built After May 2010 / Joystick)	02991299		14.9-24	18.4-34
NH T6030/6050 ROPS/2wd (Cable)	02989875	10.00-16		18.4-34
NH T6030/6050/6070/6080 Cab/4wd (Built Before May 2010 / Cable)	02988242		14.9-24	18.4-34
NH T6030/6050/6070/6080 Cab/4wd (Built After May 2010 / Cable)	02991300		14.9-24	18.4-34
NH T6030/6050/6070/6080 Cab/4wd (Built Before May 2010 / Joystick)	02988241		14.9-24	18.4-34
NH T6030/6050/6070/6080 Cab/4wd (Built After May 2010 / Joystick)	02991301		14.9-24	18.4-34

OTHER SPECIFICATIONS

(1) Always use the maximum tire size for favorable ground clearance.
(2) Tractors should not be ordered with armrest-integrated controls.
(3) Tractors must be equipped with flanged rear rims unless otherwise noted.
(4) Right handrail removal may be necessary for boom transport clearance.
(5) John Deere tractors must include a standard through-hood exhaust.
(6) John Deere 7030 series fuel tanks must not exceed 66 gal.
(7) Case-New Holland mount kits include an exhaust relocation feature.

17' VERSA BOOM
Articulated Boom Mower

STANDARD SPECIFICATIONS

- Welded Steel Plate Frame Braced to the Front Bolster & Rear Axle
- 60-Gallon Hydraulic Reservoir with 12-Micron Filtration
- 1300 lbs. Counterwight Tank Mounted
- 4" King Post with 3" Tapered Roller Bearings
- Inner Boom Arm 6"x6"x1/4" Steel Tubing
- Exterior Boom Arm 5"x5"x1/4" Steel Tubing
- 120° Horizontal Boom Swing
- Boom Reach: Up-19'6", Out-18'9", Down-8'9"
- Stacked Hydraulic Pump Rated @ 51 GPM @ 2500 PSI
- 4-Spool, Open Center, Tapered Positive Metering Valve
- Safety Cage (ROPS Unit Only)
- Axle-Mounted Boom Rest
- Mount Kit, 500# Wheel Weight & Polycarbonate Window Included in Base Price

HEAD SPECIFICATIONS

- 60" Boom-Axe Head
- 10-Gauge Deck with 1/4" Side Skirts
- Full-Length Replaceable Skid Shoes
- 4-1/2" Hardened Spindle
- 90 HP Motor Directly Splined to the Spindle
- 2-1/2"x5" Stacked Three-Leaf Blade Bar
- 5/8"x5" Blades, 360° Swing
- Front/Rear Deflectors
- Standard (1) year limited parts and labor warranty.

PRODUCT ORDER CODE	DESCRIPTION	APPRX. WEIGHT		LIST PRICE
	17' VERSA BOOM BASE UNIT *(One Choice Required)*			
04951001	17' Versa-Boom w/Cable	3800		31,327
04953001	17' Versa-Boom w/Joystick	3850		39,290
	MOWER HEAD *(One Choice Required)* ***See Options Below for Extra Mower Head Options***			
02974676	60" Boom-Axe with Bar	820		9,883
02974680	50" Boom-Axe with Pan	810		10,136
02974681	50" Boom-Axe with Bar	750		9,649
02970299	48" Flail Axe	700		11,571
02963870	60" SHD Flail	760		10,732
02974204	90" Buzzbar Head	1098		15,225
02979250	69" Buzzbar Head	705		12,799
02979266	48" Buzzbar Head	550		10,262
02972145	5' Timbercat	440		11,354
02972146	7' Timbercat	520		12,090
02985350	Ditcher Head (Hitch-Post Mounted)			11,898
	OPTIONS *(Continued Next Page)*			
02897300	Additional Operators and Parts Manuals			45
02976534	Quick Hitch Kit*			2,635
02976535	Hydraulic Kit for Quick Hitch Head**			450
02964297	Extreme Service Ext. Arm for Versa Mower/Flail Interchange	280		3,306
02975647	Flail-Axe Jack Stand Kit***			299
02977500	60" SHD Flail Jack Stand Kit****			245
02990399	Ditcher Stand*****			773
02990405	Hose Kit, Tractor Aux to Chute			805
02959639	Caster Wheel Kit, Super Heavy Duty Flail	24		1,401
02966905	Accumulator Kit Option	25		1,264

** Includes all components to convert boom and (1) head to Quick Hitch*

*** Required to convert additional heads to Quick Hitch*

**** Required to level Flail-Axe for Quick Hitch*

***** Required to level SHD Flail for Quick Hitch*

****** Required to operate Ditcher Heaed Discharge Chute*

17' VERSA BOOM

Articulated Boom Mower

PRODUCT ORDER CODE	DESCRIPTION	APPRX. WEIGHT		LIST PRICE
	OPTIONS - *Continued*			
02982874	Case-IH JXU Pump Guard Kit NH TL-A Pump Guard Kit			396
02982767	Case-IH JXU Replacement Battery (Factory Mount Only) NH TL-A Replacement Battery (Factory Mount Only)			177
02981109	Case-IH MXU & Maxxum Rear ROPS Screen Kit NH TS-A & T6000 Rear ROPS Screen Kit			393
02980652	Case-IH MXU & Maxxum Pump Guard Kit NH TS-A & T6000 Pump Guard Kit			396
02980929	Case-IH MXU & Maxxum Aluminum ROPS Canopy NH TS-A & T6000 Aluminum ROPS Canopy			962
02981353	NH TL Pump Guard Kit			396
02977499	JD 6015, 6020 & 6030 Rear Cab Screen Kit JD 7020 & 7030 "Prem/Mid-Spec" Rear Cab Screen Kit			692
02979486	JD 6015 & 6020 Rear ROPS Screen Kit			393
02979080	JD 6015, 6020 & 6030 Pump Guard Kit JD 7020 & 7030 "Prem/Mid-Spec" Pump Guard Kit			396
02976333	JD 6015 & 6020 Aluminum ROPS Canopy			962
02976500	JD 7020 Wheel Weight Adapter Kit (34" Flanged Axle)			408
02978473	JD 7020 & 7030 "Prem" Whl Wt Adapter Kit (38" Flanged Axle)			408
02978103	JD 7020 & 7030 "Prem" Whl Wt Adapter (38" Rack & Pinion)			408
02975805	Kit, Joystick Retro-Fit/Field Installed			11,062
02976671	Additional 408 lbs. Kit for 1300 lbs. Wheel Weight	408		1,326
02976670	Additional 680 lbs. Kit for 1300 lbs. Wheel Weight	680		1,966
02963038	Mounting Labor & Oil			7,542
02791800	Special Mower Paint			1,302
02968967	Special Tractor Paint			5,802
00889899VB	Additional 12 Month Warranty (00889899)			2,945

17' VERSA BOOM

MOUNT KIT OPTIONS

TRACTOR DESCRIPTION	MOUNT KIT	MAXIMUM TIRE SIZE		
		2WD Front	4WD Front	Rear
Case IH				
Case-IH Farmall 85U/95U/105U Cab/2&4wd (Cable/Fender Tank)	02986803	10.00-16	12.4-24	18.4-30
Case-IH Farmall 85U/95U/105U Cab/2&4wd (Joystick/Fender Tank)	02987108	10.00-16	12.4-24	18.4-30
Case-IH Farmall 85U/95U/105U ROPS/2&4wd (Fender Tank)	02989928	10.00-16	12.4-24	18.4-30
Case-IH JX1080U/1090U/1100U Cab/2&4wd (Cable/Fender Tank)	02982098	10.00-16	12.4-24	18.4-30
Case-IH JX1080U/1090U/1100U Cab/2&4wd (Joystick/Fender Tank)	02984094	10.00-16	12.4-24	18.4-30
Case-IH JX1080U/1090U/1100U ROPS/2&4wd (Fender Tank)	02985822	10.00-16	12.4-24	18.4-30
Case-IH Maxxum 115/125/125 Pro/140 Pro Cab/2&4wd (Cable/Fender Tank)	02981137	10.00-16	12.4-24	18.4-30
Case-IH Maxxum 115/125/125 Pro/140 Pro Cab/2&4wd (Joystick/Fender Tank)	02982226	10.00-16	12.4-24	18.4-30
Case-IH Maxxum 115/125/125 Pro/140 Pro Cab/2&4wd (540 PTO Pump/Joystick/Fender Tank)	02989499	10.00-16	12.4-24	18.4-30
Case-IH Maxxum 115/125/125 Pro/140 Pro ROPS/2&4wd (Fender Tank)	02984650	10.00-16	12.4-24	18.4-30
Case-IH MXU100/110 Cab/2wd (Cable/Fender Tank)	02982228	10.00-16	N/A	18.4-34
Case-IH MXU100/110 Cab/2wd (Joystick/Fender Tank)	02981898	10.00-16	N/A	18.4-34
Case-IH MXU100/110 Cab/4wd (Cable/Fender Tank)	02982809	N/A	12.4-24	18.4-30
Case-IH MXU115/125/130/135 Cab/2&4wd (Cable/Fender Tank)	02981137	10.00-16	12.4-24	18.4-34
Case-IH MXU115/125/130/135 Cab/2&4wd (Joystick/Fender Tank)	02982226	10.00-16	12.4-24	18.4-34
Case-IH MXU115/125/130/135 ROPS/2&4wd (Cable/Fender Tank)	02984650	10.00-16	12.4-24	18.4-34
John Deere				
JD 5083E/5093E/5101E Limited Cab/4wd (Tapped Axles-Built Before 2011/Cable/Fender Tank)	02986167	N/A	12.4-24	18.4-30
JD 5083E/5093E/5101E Limited Cab/4wd (Tapped Axles-Built Before 2011/Joystick/Fender Tank)	02986509	N/A	12.4-24	18.4-30
JD 5083E/5093E/5101E Limited Cab/4wd (Ribbed Axles-Built Before 2011/Cable/Fender Tank)	02990218	N/A	12.4-24	18.4-30
JD 5083E/5093E/5101E Limited Cab/4wd (Ribbed Axles-Built Before 2011/Joystick/Fender Tank)	02990090	N/A	12.4-24	18.4-30
JD 5083E/5093E/5101E Limited Cab/4wd (MY2011/Cable/Fender Tank)	02990896	N/A	12.4-24	18.4-30
JD 5083E/5093E/5101E Limited Cab/4wd (MY2011/Joystick/Fender Tank)	02990894	N/A	12.4-24	18.4-30
JD 5085M/5095M/5105M Cab/2&4wd (Built Before 2012/Cable/Fender Tank)	02988664	7.50-16	11.2-24	16.9-30
JD 5085M/5095M/5105M Cab/2&4wd (Built Before 2012/Joystick/Fender Tank)	02988995	7.50-16	11.2-24	16.9-30
JD 5085M/5095M/5105M ROPS/2&4wd (Built Before 2012/Fender Tank)	02990224	7.50-16	11.2-24	16.9-30
JD 5425/5525/5625 Cab/2&4wd (Cable/Fender Tank)	02983913	7.50-16	11.2-24	16.9-30
JD 5425/5525/5625 Cab/2&4wd (Joystick/Fender Tank)	02983243	7.50-16	11.2-24	16.9-30
JD 5603 Cab/4wd (Cable/Fender Tank)	02986167	N/A	12.4-24	18.4-30
JD 5603 Cab/4wd (Joystick/Fender Tank)	02986509	N/A	12.4-24	18.4-30
JD 6215/6415 Cab/2&4wd (Cable/Mid-Mt Tank)	02979218	10.00-16	12.4-24	18.4-34
JD 6215/6415 Cab/2&4wd (Cable/Fender Tank)	02981500	10.00-16	12.4-24	18.4-34
JD 6215/6415 Cab/2&4wd (Joystick/Mid-Mt Tank)	02981036	10.00-16	12.4-24	18.4-34
JD 6215/6415 ROPS/2&4wd (Mid-Mt Tank)	02980731	10.00-16	12.4-24	18.4-34
JD 6120/6220/6320/6420 (Tier II) Cab/2&4wd (Cable/Mid-Mt Tank)	02979218	10.00-16	12.4-24	18.4-34
JD 6120/6220/6320/6420 (Tier II) Cab/2&4wd (Cable/Fender Tank)	02981500	10.00-16	12.4-24	18.4-34
JD 6120/6220/6320/6420 (Tier II) Cab/2&4wd (Joystick/Mid-Mt Tank)	02979290	10.00-16	12.4-24	18.4-34
JD 6120/6220/6320/6420 (Tier II) Cab/2&4wd (Joystick/Fender Tank)	02986353	10.00-16	12.4-24	18.4-34
JD 6120/6220/6320/6420 (Tier II) ROPS/2&4wd (Cable/Mid-Mt Tank)	02980731	10.00-16	12.4-24	18.4-34
JD 6230/6330/6430 "Mid-Spec" Cab/2&4wd (Cable/Fender Tank)	02986747	10.00-16	12.4-24	18.4-34
JD 6230/6330/6430 "Mid-Spec" Cab/2&4wd (Joystick/Fender Tank)	02986711	10.00-16	12.4-24	18.4-34
JD 6230/6330/6430 "Mid-Spec" ROPS/2&4wd (Fender Tank)	02990042	10.00-16	12.4-24	18.4-34
JD 6230/6330/6430 "Premium" Cab/2&4wd (Cable/Fender Tank)	02986184	10.00-16	12.4-24	18.4-34
JD 6230/6330/6430 "Premium" Cab/2&4wd (Joystick/Fender Tank)	02985260	10.00-16	12.4-24	18.4-34
JD 6615/6715 Cab/2&4wd (Cable/Mid-Mt Tank)	02979858	11.00-16	13.6-24	18.4-34
JD 6615/6715 Cab/2&4wd (Joystick/Mid-Mt Tank)	02979925	11.00-16	13.6-24	18.4-34
JD 7220/7320/7420/7520 Cab/2&4wd (Cable/Mid-Mt Tank)	02979858	11.00-16	13.6-28	18.4-38
JD 7220/7320/7420/7520 Cab/2&4wd (Joystick/Mid-Mt Tank)	02979925	11.00-16	13.6-28	18.4-38
JD 7130/7230 "Mid" Cab/2&4wd (4 or 6 cyld/55 gal. fuel tank/Cable/Fender Tank)	02987878	11.00-16	13.6-28	18.4-38
JD 7130/7230 "Mid" Cab/2&4wd (4 or 6 cyld/55 gal. fuel tank/Joystick/Fender Tank)	02987277	11.00-16	13.6-28	18.4-38
JD 7130/7230 "Mid" Cab/2&4wd w/JD673 Loader (4 or 6 cyld/55 gal. fuel tank/Joystick/Fender Tank)	02991416	11.00-16	13.6-28	18.4-38
JD 7130/7230 "Mid" ROPS/2&4wd (4 or 6 cyld/55 gal. fuel tank/Joystick/Fender Tank)	02987526	11.00-16	13.6-28	18.4-38

17' VERSA BOOM

MOUNT KIT OPTIONS

TRACTOR DESCRIPTION	MOUNT KIT	MAXIMUM TIRE SIZE		
		2WD Front	4WD Front	Rear
New Holland				
NH T5040/5050/5060/5070 Cab/2&4wd (Cable/Fender Tank)	02986803	10.00-16	12.4-24	18.4-30
NH T5040/5050/5060/5070 Cab/2&4wd (Joystick/Fender Tank)	02987108	10.00-16	12.4-24	18.4-30
NH T5040/5050/5060/5070 ROPS/2&4wd (Fender Tank)	02989928	10.00-16	12.4-24	18.4-30
NH T6010/6020/6040/6060 Cab/2wd (Cable/Fender Tank)	02985514	10.00-16	N/A	18.4-34
NH T6010/6020/6040/6060 Cab/2wd (Joystick/Fender Tank)	02988197	10.00-16	N/A	18.4-34
NH T6010/6020/6040/6060 Cab/4wd (Joystick/Fender Tank)	02987018	N/A	12.4-24	18.4-30
NH T6010/6020 "Delta" ROPS/2wd (Fender Tank)	02986206	10.00-16	N/A	18.4-34
NH T6030/6050/6070 Cab/2&4wd (Flanged Wheel Axle/Cable/Fender Tank)	02981137	10.00-16	12.4-24	18.4-34
NH T6030/6050/6070 Cab/2&4wd (Rack & Pinion Axle/Cable/Fender Tank)	02991003	10.00-16	12.4-24	18.4-34
NH T6030/6050/6070 Cab/2&4wd (Joystick/Fender Tank)	02982226	10.00-16	12.4-24	18.4-34
NH T6030/6050/6070 Cab/2&4wd (540 PTO Pump/Joystick/Fender Tank)	02989499	10.00-16	12.4-24	18.4-34
NH T6030/6050 ROPS/2&4wd (Fender Tank)	02984650	10.00-16	12.4-24	18.4-34
NH TL80/90/100 Cab/2&4wd (Cable/Fender Tank)	02980259	10.00-16	12.4-24	18.4-30
NH TL80A/90A/100A Cab/2&4wd (Cable/Fender Tank)	02982098	10.00-16	12.4-24	18.4-30
NH TL80A/90A/100A Cab/2&4wd (Joystick/Fender Tank)	02984094	10.00-16	12.4-24	18.4-30
NH TL80A/90A/100A ROPS/2&4wd (Fender Tank)	02985822	10.00-16	12.4-24	18.4-30
NH TS100A/110A Cab/2wd (Cable/Fender Tank)	02982228	10.00-16	N/A	18.4-34
NH TS100A/110A Cab/2wd (Joystick/Fender Tank)	02981898	10.00-16	N/A	18.4-34
NH TS100A/110A Cab/4wd (Cable/Fender Tank)	02982809	N/A	12.4-24	18.4-30
NH TS115A/125A/130A/135A Cab/2&4wd (Cable/Fender Tank)	02981137	10.00-16	12.4-24	18.4-30
NH TS115A/125A/130A/135A Cab/2&4wd (Joystick/Fender Tank)	02982226	10.00-16	12.4-24	18.4-30
NH TS115A/125A/130A/135A Cab/2&4wd (540 PTO Pump/Joystick/Fender Tank)	02989499	10.00-16	12.4-24	18.4-34
NH TS115A/125A/130A/135A ROPS/2&4wd (Fender Tank)	02984650	10.00-16	12.4-24	18.4-34
NH TS6020/6030 Cab/2wd (Cable/Fender Tank)	02991179	10.00-16	N/A	18.4-34
NH TS6020/6030 ROPS/2wd (Fender Tank)	02989952	10.00-16	N/A	18.4-34

OTHER SPECIFICATIONS

(1) Always use the maximum tire size for favorable ground clearance.
(2) Tractors should not be ordered with armrest-integrated controls.
(3) Tractors must be equipped with flanged rear rims unless otherwise noted.
(4) Right handrail removal may be necessary for boom transport clearance.
(5) John Deere tractors must include a standard through-hood exhaust.
(6) Case-New Holland mount kits include an exhaust relocation feature.
(7) Case-IH JX-U & Farmall U and New Holland TL-A & T5000 series tractors require a smaller replacement battery which is not included. We recommend using Exide® #34R-84N.

20' VERSA BOOM
Articulated Boom Mower

STANDARD SPECIFICATIONS

- Welded Steel Plate Frame Braced to the Front Bolster & Rear Axle
- 60-Gallon Hydraulic Reservoir with 12-Micron Filtration
- 1300 lbs. Counterwight Tank Mounted
- 4" King Post with 3" Tapered Roller Bearings
- Inner Boom Arm 6"x6"x1/4" Steel Tubing
- Exterior Boom Arm 5"x5"x1/4" Steel Tubing
- 120° Horizontal Boom Swing
- Boom Reach: Up-20'3", Out-20'7", Down-12'3"
- Stacked Hydraulic Pump Rated @ 51 GPM @ 2500 PSI
- 4-Spool, Open Center, Tapered Positive Metering Valve
- Safety Cage (ROPS Unit Only)
- Axle-Mounted Boom Rest
- Mount Kit, 1,300# Wheel Weight & Polycarbonate Window Included in Base Price

HEAD SPECIFICATIONS

- 60" Boom-Axe Head
- 10-Gauge Deck with 1/4" Side Skirts
- Full-Length Replaceable Skid Shoes
- 4-1/2" Hardened Spindle
- 90 HP Motor Directly Splined to the Spindle
- 2-1/2"x5" Stacked Three-Leaf Blade Bar
- 5/8"x5" Blades, 360° Swing
- Front/Rear Deflectors
- Standard (1) year limited parts and labor warranty.

PRODUCT ORDER CODE	DESCRIPTION	APPRX. WEIGHT		LIST PRICE
	20' VERSA BOOM BASE UNIT *(One Choice Required)*			
04951005	20' Versa-Boom with Cable	4000		33,351
04953005	20' Versa-Boom with Joystick	4050		40,798
	MOWER HEAD *(One Choice Required)* ***See Options Below for Extra Mower Head Options***			
02974676	60" Boom-Axe with Bar	820		9,883
02974680	50" Boom-Axe with Pan	810		10,136
02974681	50" Boom-Axe with Bar	750		9,649
02970299	48" Flail Axe	700		11,571
02963870	60" SHD Flail	760		10,732
02974204	90" Buzzbar Head	1098		15,225
02979250	69" Buzzbar Head	705		12,799
02979266	48" Buzzbar Head	550		10,262
02972145	5' Timbercat	440		11,354
02972146	7' Timbercat	520		12,090
02215421	Ditcher Head (Mounted to Lift Section)	600		11,898
02215422	Ditcher Head - Reverse Rotation (Mounted to Lift Section)	600		11,898
02985350	Ditcher Head (Hitch-Post Mounted)			11,898
	OPTIONS *(Continued Next Page)*			
02897300	Additional Operators and Parts Manuals			45
02976534	Quick Hitch Kit*			2,635
02976535	Hydraulic Kit for Quick Hitch Head**			450
02964297	Extreme Service Ext. Arm for Versa Mower/Flail Interchange	280		3,306
02975647	Flail-Axe Jack Stand Kit***			299
02977500	60" SHD Flail Jack Stand Kit****			245
02990399	Ditcher Stand*****			773
02990405	Hose Kit, Tractor Aux to Chute			805
02959639	Caster Wheel Kit, Super Heavy Duty Flail	24		1,401
02966905	Accumulator Kit Option	25		1,264

** Includes all components to convert boom and (1) head to Quick Hitch*
*** Required to convert additional heads to Quick Hitch*
**** Required to level Flail-Axe for Quick Hitch*
***** Required to level SHD Flail for Quick Hitch*
****** Required to operate Ditcher Heaed Discharge Chute*

ALAMO INDUSTRIAL
(800) 882-5762

Prices Effective February 11, 2011

20' VERSA BOOM

Articulated Boom Mower

PRODUCT ORDER CODE	DESCRIPTION	APPRX. WEIGHT		LIST PRICE
	OPTIONS - *Continued*			
02982874	Case-IH JXU Pump Guard Kit NH TL-A Pump Guard Kit			396
02982767	Case-IH JXU Replacement Battery (Factory Mount Only) NH TL-A Replacement Battery (Factory Mount Only)			177
02981109	Case-IH MXU & Maxxum Rear ROPS Screen Kit NH TS-A & T6000 Rear ROPS Screen Kit			393
02980652	Case-IH MXU & Maxxum Pump Guard Kit NH TS-A & T6000 Pump Guard Kit			396
02980929	Case-IH MXU & Maxxum Aluminum ROPS Canopy NH TS-A & T6000 Aluminum ROPS Canopy			962
02981353	NH TL Pump Guard Kit			396
02977499	JD 6015, 6020 & 6030 Rear Cab Screen Kit JD 7020 & 7030 "Prem/Mid-Spec" Rear Cab Screen Kit			692
02979486	JD 6015 & 6020 Rear ROPS Screen Kit			393
02979080	JD 6015, 6020 & 6030 Pump Guard Kit JD 7020 & 7030 "Prem/Mid-Spec" Pump Guard Kit			396
02976333	JD 6015 & 6020 Aluminum ROPS Canopy			962
02976500	JD 7020 Wheel Weight Adapter Kit (34" Flanged Axle)			408
02978473	JD 7020 & 7030 "Prem" Whl Wt Adapter Kit (38" Flanged Axle)			408
02978103	JD 7020 & 7030 "Prem" Whl Wt Adapter (38" Rack & Pinion)			408
02975805	Kit, Joystick Retro-Fit/Field Installed			11,062
02976671	Additional 408 lbs. Kit for 1300 lbs. Wheel Weight	408		1,326
02976670	Additional 680 lbs. Kit for 1300 lbs. Wheel Weight	680		1,966
02963038	Mounting Labor & Oil			7,542
02791800	Special Mower Paint			1,302
02968967	Special Tractor Paint			5,802
00889899VB	Additional 12 Month Warranty (00889899)			2,945

20' VERSA BOOM

MOUNT KIT OPTIONS

TRACTOR DESCRIPTION	MOUNT KIT	MAXIMUM TIRE SIZE		
		2WD Front	4WD Front	Rear
Case IH				
Case-IH Farmall 85U/95U/105U Cab/2&4wd (Cable/Fender Tank)	02986803	10.00-16	12.4-24	18.4-30
Case-IH Farmall 85U/95U/105U Cab/2&4wd (Joystick/Fender Tank)	02987108	10.00-16	12.4-24	18.4-30
Case-IH Farmall 85U/95U/105U ROPS/2&4wd (Fender Tank)	02989928	10.00-16	12.4-24	18.4-30
Case-IH JX1080U/1090U/1100U Cab/2&4wd (Cable/Fender Tank)	02982098	10.00-16	12.4-24	18.4-30
Case-IH JX1080U/1090U/1100U Cab/2&4wd (Joystick/Fender Tank)	02984094	10.00-16	12.4-24	18.4-30
Case-IH JX1080U/1090U/1100U ROPS/2&4wd (Fender Tank)	02985822	10.00-16	12.4-24	18.4-30
Case-IH Maxxum 115/125/125 Pro/140 Pro Cab/2&4wd (Cable/Fender Tank)	02981137	10.00-16	12.4-24	18.4-30
Case-IH Maxxum 115/125/125 Pro/140 Pro Cab/2&4wd (Joystick/Fender Tank)	02982226	10.00-16	12.4-24	18.4-30
Case-IH Maxxum 115/125/125 Pro/140 Pro Cab/2&4wd (540 PTO Pump/Joystick/Fender Tar	02989499	10.00-16	12.4-24	18.4-30
Case-IH Maxxum 115/125/125 Pro/140 Pro ROPS/2&4wd (Fender Tank)	02984650	10.00-16	12.4-24	18.4-30
Case-IH MXU100/110 Cab/2wd (Cable/Fender Tank)	02982228	10.00-16	N/A	18.4-34
Case-IH MXU100/110 Cab/2wd (Joystick/Fender Tank)	02981898	10.00-16	N/A	18.4-34
Case-IH MXU100/110 Cab/4wd (Cable/Fender Tank)	02982809	N/A	12.4-24	18.4-30
Case-IH MXU115/125/130/135 Cab/2&4wd (Cable/Fender Tank)	02981137	10.00-16	12.4-24	18.4-34
Case-IH MXU115/125/130/135 Cab/2&4wd (Joystick/Fender Tank)	02982226	10.00-16	12.4-24	18.4-34
Case-IH MXU115/125/130/135 ROPS/2&4wd (Cable/Fender Tank)	02984650	10.00-16	12.4-24	18.4-34
John Deere				
JD 5083E/5093E/5101E Limited Cab/4wd (Tapped Axles-Built Before 2011/Cable/Fender Ta	02986167	N/A	12.4-24	18.4-30
JD 5083E/5093E/5101E Limited Cab/4wd (Tapped Axles-Built Before 2011/Joystick/Fender T	02986509	N/A	12.4-24	18.4-30
JD 5083E/5093E/5101E Limited Cab/4wd (Ribbed Axles-Built Before 2011/Cable/Fender Tar	02990218	N/A	12.4-24	18.4-30
JD 5083E/5093E/5101E Limited Cab/4wd (Ribbed Axles-Built Before 2011/Joystick/Fender T	02990090	N/A	12.4-24	18.4-30
JD 5083E/5093E/5101E Limited Cab/4wd (MY2011/Cable/Fender Tank)	02990896	N/A	12.4-24	18.4-30
JD 5083E/5093E/5101E Limited Cab/4wd (MY2011/Joystick/Fender Tank)	02990894	N/A	12.4-24	18.4-30
JD 5085M/5095M/5105M Cab/2&4wd (Built Before 2012/Cable/Fender Tank)	02988664	7.50-16	11.2-24	16.9-30
JD 5085M/5095M/5105M Cab/2&4wd (Built Before 2012/Joystick/Fender Tank)	02988995	7.50-16	11.2-24	16.9-30
JD 5085M/5095M/5105M ROPS/2&4wd (Built Before 2012/Fender Tank)	02990224	7.50-16	11.2-24	16.9-30
JD 5425/5525/5625 Cab/2&4wd (Cable/Fender Tank)	02983913	7.50-16	11.2-24	16.9-30
JD 5425/5525/5625 Cab/2&4wd (Joystick/Fender Tank)	02983243	7.50-16	11.2-24	16.9-30
JD 5603 Cab/4wd (Cable/Fender Tank)	02986167	N/A	12.4-24	18.4-30
JD 5603 Cab/4wd (Joystick/Fender Tank)	02986509	N/A	12.4-24	18.4-30
JD 6215/6415 Cab/2&4wd (Cable/Mid-Mt Tank)	02979218	10.00-16	12.4-24	18.4-34
JD 6215/6415 Cab/2&4wd (Cable/Fender Tank)	02981500	10.00-16	12.4-24	18.4-34
JD 6215/6415 Cab/2&4wd (Joystick/Mid-Mt Tank)	02981036	10.00-16	12.4-24	18.4-34
JD 6215/6415 ROPS/2&4wd (Mid-Mt Tank)	02980731	10.00-16	12.4-24	18.4-34
JD 6120/6220/6320/6420 (Tier II) Cab/2&4wd (Cable/Mid-Mt Tank)	02979218	10.00-16	12.4-24	18.4-34
JD 6120/6220/6320/6420 (Tier II) Cab/2&4wd (Cable/Fender Tank)	02981500	10.00-16	12.4-24	18.4-34
JD 6120/6220/6320/6420 (Tier II) Cab/2&4wd (Joystick/Mid-Mt Tank)	02979290	10.00-16	12.4-24	18.4-34
JD 6120/6220/6320/6420 (Tier II) Cab/2&4wd (Joystick/Fender Tank)	02986353	10.00-16	12.4-24	18.4-34
JD 6120/6220/6320/6420 (Tier II) ROPS/2&4wd (Cable/Mid-Mt Tank)	02980731	10.00-16	12.4-24	18.4-34
JD 6230/6330/6430 "Mid-Spec" Cab/2&4wd (Cable/Fender Tank)	02986747	10.00-16	12.4-24	18.4-34
JD 6230/6330/6430 "Mid-Spec" Cab/2&4wd (Joystick/Fender Tank)	02986711	10.00-16	12.4-24	18.4-34
JD 6230/6330/6430 "Mid-Spec" ROPS/2&4wd (Fender Tank)	02990042	10.00-16	12.4-24	18.4-34
JD 6230/6330/6430 "Premium" Cab/2&4wd (Cable/Fender Tank)	02986184	10.00-16	12.4-24	18.4-34
JD 6230/6330/6430 "Premium" Cab/2&4wd (Joystick/Fender Tank)	02985260	10.00-16	12.4-24	18.4-34
JD 6615/6715 Cab/2&4wd (Cable/Mid-Mt Tank)	02979858	11.00-16	13.6-24	18.4-34
JD 6615/6715 Cab/2&4wd (Joystick/Mid-Mt Tank)	02979925	11.00-16	13.6-24	18.4-34
JD 7220/7320/7420/7520 Cab/2&4wd (Cable/Mid-Mt Tank)	02979858	11.00-16	13.6-28	18.4-38
JD 7220/7320/7420/7520 Cab/2&4wd (Joystick/Mid-Mt Tank)	02979925	11.00-16	13.6-28	18.4-38
JD 7130/7230 "Mid" Cab/2&4wd (4 or 6 cyld/55 gal. fuel tank/Cable/Fender Tank)	02987878	11.00-16	13.6-28	18.4-38
JD 7130/7230 "Mid" Cab/2&4wd (4 or 6 cyld/55 gal. fuel tank/Joystick/Fender Tank)	02987277	11.00-16	13.6-28	18.4-38
JD 7130/7230 "Mid" Cab/2&4wd w/JD673 Loader (4 or 6 cyld/55 gal. fuel tank/Joystick/Fend	02991416	11.00-16	13.6-28	18.4-38
JD 7130/7230 "Mid" ROPS/2&4wd (4 or 6 cyld/55 gal. fuel tank/Joystick/Fender Tank)	02987526	11.00-16	13.6-28	18.4-38

20' VERSA BOOM

MOUNT KIT OPTIONS

TRACTOR DESCRIPTION	MOUNT KIT	MAXIMUM TIRE SIZE		
		2WD Front	4WD Front	Rear
New Holland				
NH T5040/5050/5060/5070 Cab/2&4wd (Cable/Fender Tank)	02986803	10.00-16	12.4-24	18.4-30
NH T5040/5050/5060/5070 Cab/2&4wd (Joystick/Fender Tank)	02987108	10.00-16	12.4-24	18.4-30
NH T5040/5050/5060/5070 ROPS/2&4wd (Fender Tank)	02989928	10.00-16	12.4-24	18.4-30
NH T6010/6020/6040/6060 Cab/2wd (Cable/Fender Tank)	02985514	10.00-16	N/A	18.4-34
NH T6010/6020/6040/6060 Cab/2wd (Joystick/Fender Tank)	02988197	10.00-16	N/A	18.4-34
NH T6010/6020/6040/6060 Cab/4wd (Joystick/Fender Tank)	02987018	N/A	12.4-24	18.4-30
NH T6010/6020 "Delta" ROPS/2wd (Fender Tank)	02986206	10.00-16	N/A	18.4-34
NH T6030/6050/6070 Cab/2&4wd (Flanged Wheel Axle/Cable/Fender Tank)	02981137	10.00-16	12.4-24	18.4-34
NH T6030/6050/6070 Cab/2&4wd (Rack & Pinion Axle/Cable/Fender Tank)	02991003	10.00-16	12.4-24	18.4-34
NH T6030/6050/6070 Cab/2&4wd (Joystick/Fender Tank)	02982226	10.00-16	12.4-24	18.4-34
NH T6030/6050/6070 Cab/2&4wd (540 PTO Pump/Joystick/Fender Tank)	02989499	10.00-16	12.4-24	18.4-34
NH T6030/6050 ROPS/2&4wd (Fender Tank)	02984650	10.00-16	12.4-24	18.4-34
NH TL80/90/100 Cab/2&4wd (Cable/Fender Tank)	02980259	10.00-16	12.4-24	18.4-30
NH TL80A/90A/100A Cab/2&4wd (Cable/Fender Tank)	02982098	10.00-16	12.4-24	18.4-30
NH TL80A/90A/100A Cab/2&4wd (Joystick/Fender Tank)	02984094	10.00-16	12.4-24	18.4-30
NH TL80A/90A/100A ROPS/2&4wd (Fender Tank)	02985822	10.00-16	12.4-24	18.4-30
NH TS100A/110A Cab/2wd (Cable/Fender Tank)	02982228	10.00-16	N/A	18.4-34
NH TS100A/110A Cab/2wd (Joystick/Fender Tank)	02981898	10.00-16	N/A	18.4-34
NH TS100A/110A Cab/4wd (Cable/Fender Tank)	02982809	N/A	12.4-24	18.4-30
NH TS115A/125A/130A/135A Cab/2&4wd (Cable/Fender Tank)	02981137	10.00-16	12.4-24	18.4-30
NH TS115A/125A/130A/135A Cab/2&4wd (Joystick/Fender Tank)	02982226	10.00-16	12.4-24	18.4-30
NH TS115A/125A/130A/135A Cab/2&4wd (540 PTO Pump/Joystick/Fender Tank)	02989499	10.00-16	12.4-24	18.4-34
NH TS115A/125A/130A/135A ROPS/2&4wd (Fender Tank)	02984650	10.00-16	12.4-24	18.4-34
NH TS6020/6030 Cab/2wd (Cable/Fender Tank)	02991179	10.00-16	N/A	18.4-34
NH TS6020/6030 ROPS/2wd (Fender Tank)	02989952	10.00-16	N/A	18.4-34

OTHER SPECIFICATIONS

(1) Always use the maximum tire size for favorable ground clearance.
(2) Tractors should not be ordered with armrest-integrated controls.
(3) Tractors must be equipped with flanged rear rims unless otherwise noted.
(4) Right handrail removal may be necessary for boom transport clearance.
(5) John Deere tractors must include a standard through-hood exhaust.
(6) Case-New Holland mount kits include an exhaust relocation feature.
(7) Case-IH JX-U & Farmall U and New Holland TL-A & T5000 series tractors require a smaller replacement battery which is not included. We recommend using Exide® #34R-84N.

23' VERSA BOOM
Articulated Boom Mower

STANDARD SPECIFICATIONS

- Welded Steel Plate Frame Braced to the Front Bolster & Rear Axle
- 60-Gallon Hydraulic Reservoir with 12-Micron Filtration
- 1300 lbs. Counterwight Tank Mounted
- 4" King Post with 3" Tapered Roller Bearings
- Inner Boom Arm 6"x6"x1/4" Steel Tubing
- Exterior Boom Arm 5"x5"x1/4" Steel Tubing
- 120° Horizontal Boom Swing
- Boom Reach: Up-22'10", Out-23'10", Down-15'6"
- Stacked Hydraulic Pump Rated @ 51 GPM @ 2500 PSI
- 4-Spool, Open Center, Tapered Positive Metering Valve
- Safety Cage (ROPS Unit Only)
- Axle-Mounted Boom Rest
- Mount Kit, 1,300# Wheel Weight & Polycarbonate Window Included in Base Price

HEAD SPECIFICATIONS

- 60" Boom-Axe Head
- 10-Gauge Deck with 1/4" Side Skirts
- Full-Length Replaceable Skid Shoes
- 4-1/2" Hardened Spindle
- 90 HP Motor Directly Splined to the Spindle
- 2-1/2"x5" Stacked Three-Leaf Blade Bar
- 5/8"x5" Blades, 360° Swing
- Front/Rear Deflectors
- Standard (1) year limited parts and labor warranty.

PRODUCT ORDER CODE	DESCRIPTION	APPRX. WEIGHT		LIST PRICE
	23' VERSA BOOM BASE UNIT *(One Choice Required)*			
04951009	23' Versa-Boom w/Cable	4100		34,728
04953009	23' Versa-Boom w/Joystick	4150		42,134
	MOWER HEAD *(One Choice Required)* ***See Options Below for Extra Mower Head Options***			
02974676	60" Boom-Axe with Bar	820		9,883
02974680	50" Boom-Axe with Pan	810		10,136
02974681	50" Boom-Axe with Bar	750		9,649
02970299	48" Flail Axe	700		11,571
02963870	60" SHD Flail	760		10,732
02974204	90" Buzzbar Head	1098		15,225
02979250	69" Buzzbar Head	705		12,799
02979266	48" Buzzbar Head	550		10,262
02972145	5' Timbercat	440		11,354
02972146	7' Timbercat	520		12,090
02215421	Ditcher Head (Mounted to Lift Section)	600		11,898
02215422	Ditcher Head - Reverse Rotation (Mounted to Lift Section)	600		11,898
02985350	Ditcher Head (Hitch-Post Mounted)			11,898
	OPTIONS *(Continued Next Page)*			
02897300	Additional Operators and Parts Manuals			45
02976534	Quick Hitch Kit*			2,635
02976535	Hydraulic Kit for Quick Hitch Head**			450
02964297	Extreme Service Ext. Arm for Versa Mower/Flail Interchange	280		3,306
02975647	Flail-Axe Jack Stand Kit***			299
02977500	60" SHD Flail Jack Stand Kit****			245
02990399	Ditcher Stand*****			773
02990405	Hose Kit, Tractor Aux to Chute			805
02959639	Caster Wheel Kit, Super Heavy Duty Flail	24		1,401
02966905	Accumulator Kit Option	25		1,264

** Includes all components to convert boom and (1) head to Quick Hitch*
*** Required to convert additional heads to Quick Hitch*
**** Required to level Flail-Axe for Quick Hitch*
***** Required to level SHD Flail for Quick Hitch*
****** Required to operate Ditcher Heaed Discharge Chute*

ALAMO INDUSTRIAL
(800) 882-5762

Prices Effective February 11, 2011

23' VERSA BOOM
Articulated Boom Mower

PRODUCT ORDER CODE	DESCRIPTION	APPRX. WEIGHT		LIST PRICE
	OPTIONS - *Continued*			
02981109	Case-IH MXU & Maxxum Rear ROPS Screen Kit NH TS-A & T6000 Rear ROPS Screen Kit			393
02980652	Case-IH MXU & Maxxum Pump Guard Kit NH TS-A & T6000 Pump Guard Kit			396
02980929	Case-IH MXU & Maxxum Aluminum ROPS Canopy NH TS-A & T6000 Aluminum ROPS Canopy			962
02977499	JD 6015, 6020 & 6030 Rear Cab Screen Kit JD 7020 & 7030 "Prem/Mid-Spec" Rear Cab Screen Kit			692
02979486	JD 6015 & 6020 Rear ROPS Screen Kit			393
02979080	JD 6015, 6020 & 6030 Pump Guard Kit JD 7020 & 7030 "Prem/Mid-Spec" Pump Guard Kit			396
02976333	JD 6015 & 6020 Aluminum ROPS Canopy			962
02976500	JD 7020 Wheel Weight Adapter Kit (34" Flanged Axle)			408
02978473	JD 7020 & 7030 "Prem" Whl Wt Adapter Kit (38" Flanged Axle)			408
02978103	JD 7020 & 7030 "Prem" Whl Wt Adapter (38" Rack & Pinion)			408
02975805	Kit, Joystick Retro-Fit/Field Installed			11,062
02976671	Additional 408 lbs. Kit for 1300 lbs. Wheel Weight	408		1,326
02976670	Additional 680 lbs. Kit for 1300 lbs. Wheel Weight	680		1,966
02963038	Mounting Labor & Oil			7,542
02791800	Special Mower Paint			1,302
02968967	Special Tractor Paint			5,802
00889899VB	Additional 12 Month Warranty (00889899)			2,945

23' VERSA BOOM

MOUNT KIT OPTIONS

TRACTOR DESCRIPTION	MOUNT KIT	MAXIMUM TIRE SIZE		
		2WD Front	4WD Front	Rear
Case IH				
Case-IH Maxxum 115/125/125 Pro/140 Pro Cab/2&4wd (Cable/Fender Tank)	02981137	10.00-16	12.4-24	18.4-30
Case-IH Maxxum 115/125/125 Pro/140 Pro Cab/2&4wd (Joystick/Fender Tank)	02982226	10.00-16	12.4-24	18.4-30
Case-IH Maxxum 115/125/125 Pro/140 Pro Cab/2&4wd (540 PTO Pump/Joystick/Fender Tank)	02989499	10.00-16	12.4-24	18.4-30
Case-IH Maxxum 115/125/125 Pro/140 Pro ROPS/2&4wd (Fender Tank)	02984650	10.00-16	12.4-24	18.4-30
Case-IH MXU100/110 Cab/2wd (Cable/Fender Tank)	02982228	10.00-16	N/A	18.4-34
Case-IH MXU100/110 Cab/2wd (Joystick/Fender Tank)	02981898	10.00-16	N/A	18.4-34
Case-IH MXU100/110 Cab/4wd (Cable/Fender Tank)	02982809	N/A	12.4-24	18.4-30
Case-IH MXU115/125/130/135 Cab/2&4wd (Cable/Fender Tank)	02981137	10.00-16	12.4-24	18.4-34
Case-IH MXU115/125/130/135 Cab/2&4wd (Joystick/Fender Tank)	02982226	10.00-16	12.4-24	18.4-34
Case-IH MXU115/125/130/135 ROPS/2&4wd (Cable/Fender Tank)	02984650	10.00-16	12.4-24	18.4-34
John Deere				
JD 6215/6415 Cab/2&4wd (Cable/Mid-Mt Tank)	02979218	10.00-16	12.4-24	18.4-34
JD 6215/6415 Cab/2&4wd (Cable/Fender Tank)	02981500	10.00-16	12.4-24	18.4-34
JD 6215/6415 Cab/2&4wd (Joystick/Mid-Mt Tank)	02981036	10.00-16	12.4-24	18.4-34
JD 6215/6415 ROPS/2&4wd (Mid-Mt Tank)	02980731	10.00-16	12.4-24	18.4-34
JD 6120/6220/6320/6420 (Tier II) Cab/2&4wd (Cable/Mid-Mt Tank)	02979218	10.00-16	12.4-24	18.4-34
JD 6120/6220/6320/6420 (Tier II) Cab/2&4wd (Cable/Fender Tank)	02981500	10.00-16	12.4-24	18.4-34
JD 6120/6220/6320/6420 (Tier II) Cab/2&4wd (Joystick/Mid-Mt Tank)	02979290	10.00-16	12.4-24	18.4-34
JD 6120/6220/6320/6420 (Tier II) Cab/2&4wd (Joystick/Fender Tank)	02986353	10.00-16	12.4-24	18.4-34
JD 6120/6220/6320/6420 (Tier II) ROPS/2&4wd (Cable/Mid-Mt Tank)	02980731	10.00-16	12.4-24	18.4-34
JD 6230/6330/6430 "Mid-Spec" Cab/2&4wd (Cable/Fender Tank)	02986747	10.00-16	12.4-24	18.4-34
JD 6230/6330/6430 "Mid-Spec" Cab/2&4wd (Joystick/Fender Tank)	02986711	10.00-16	12.4-24	18.4-34
JD 6230/6330/6430 "Mid-Spec" ROPS/2&4wd (Fender Tank)	02990042	10.00-16	12.4-24	18.4-34
JD 6230/6330/6430 "Premium" Cab/2&4wd (Cable/Fender Tank)	02986184	10.00-16	12.4-24	18.4-34
JD 6230/6330/6430 "Premium" Cab/2&4wd (Joystick/Fender Tank)	02985260	10.00-16	12.4-24	18.4-34
JD 6615/6715 Cab/2&4wd (Cable/Mid-Mt Tank)	02979858	11.00-16	13.6-24	18.4-34
JD 6615/6715 Cab/2&4wd (Joystick/Mid-Mt Tank)	02979925	11.00-16	13.6-24	18.4-34
JD 7220/7320/7420/7520 Cab/2&4wd (Cable/Mid-Mt Tank)	02979858	11.00-16	13.6-28	18.4-38
JD 7220/7320/7420/7520 Cab/2&4wd (Joystick/Mid-Mt Tank)	02979925	11.00-16	13.6-28	18.4-38
JD 7130/7230 "Mid" Cab/2&4wd (4 or 6 cyld/55 gal. fuel tank/Cable/Fender Tank)	02987878	11.00-16	13.6-28	18.4-38
JD 7130/7230 "Mid" Cab/2&4wd (4 or 6 cyld/55 gal. fuel tank/Joystick/Fender Tank)	02987277	11.00-16	13.6-28	18.4-38
JD 7130/7230 "Mid" Cab/2&4wd w/JD673 Loader (4 or 6 cyld/55 gal. fuel tank/Joystick/Fender Tank)	02991416	11.00-16	13.6-28	18.4-38
JD 7130/7230 "Mid" ROPS/2&4wd (4 or 6 cyld/55 gal. fuel tank/Joystick/Fender Tank)	02987526	11.00-16	13.6-28	18.4-38

23' VERSA BOOM

MOUNT KIT OPTIONS

TRACTOR DESCRIPTION	MOUNT KIT	MAXIMUM TIRE SIZE		
		2WD Front	4WD Front	Rear
New Holland				
NH T6010/6020/6040/6060 Cab/2wd (Cable/Fender Tank)	02985514	10.00-16	N/A	18.4-34
NH T6010/6020/6040/6060 Cab/2wd (Joystick/Fender Tank)	02988197	10.00-16	N/A	18.4-34
NH T6010/6020/6040/6060 Cab/4wd (Joystick/Fender Tank)	02987018	N/A	12.4-24	18.4-30
NH T6010/6020 "Delta" ROPS/2wd (Fender Tank)	02986206	10.00-16	N/A	18.4-34
NH T6030/6050/6070 Cab/2&4wd (Flanged Wheel Axle/Cable/Fender Tank)	02981137	10.00-16	12.4-24	18.4-34
NH T6030/6050/6070 Cab/2&4wd (Rack & Pinion Axle/Cable/Fender Tank)	02991003	10.00-16	12.4-24	18.4-34
NH T6030/6050/6070 Cab/2&4wd (Joystick/Fender Tank)	02982226	10.00-16	12.4-24	18.4-34
NH T6030/6050/6070 Cab/2&4wd (540 PTO Pump/Joystick/Fender Tank)	02989499	10.00-16	12.4-24	18.4-34
NH T6030/6050 ROPS/2&4wd (Fender Tank)	02984650	10.00-16	12.4-24	18.4-34
NH TS100A/110A Cab/2wd (Cable/Fender Tank)	02982228	10.00-16	N/A	18.4-34
NH TS100A/110A Cab/2wd (Joystick/Fender Tank)	02981898	10.00-16	N/A	18.4-34
NH TS100A/110A Cab/4wd (Cable/Fender Tank)	02982809	N/A	12.4-24	18.4-30
NH TS115A/125A/130A/135A Cab/2&4wd (Cable/Fender Tank)	02981137	10.00-16	12.4-24	18.4-30
NH TS115A/125A/130A/135A Cab/2&4wd (Joystick/Fender Tank)	02982226	10.00-16	12.4-24	18.4-30
NH TS115A/125A/130A/135A Cab/2&4wd (540 PTO Pump/Joystick/Fender Tank)	02989499	10.00-16	12.4-24	18.4-34
NH TS115A/125A/130A/135A ROPS/2&4wd (Fender Tank)	02984650	10.00-16	12.4-24	18.4-34
NH TS6020/6030 Cab/2wd (Cable/Fender Tank)	02991179	10.00-16	N/A	18.4-34
NH TS6020/6030 ROPS/2wd (Fender Tank)	02989952	10.00-16	N/A	18.4-34

OTHER SPECIFICATIONS

(1) Always use the maximum tire size for favorable ground clearance.
(2) Tractors should not be ordered with armrest-integrated controls.
(3) Tractors must be equipped with flanged rear rims unless otherwise noted.
(4) Right handrail removal may be necessary for boom transport clearance.
(5) John Deere tractors must include a standard through-hood exhaust.
(6) Case-New Holland mount kits include an exhaust relocation feature.

10' FALCON

Hydraulic Rotary Mower

STANDARD SPECIFICATIONS

- 540 PTO
- 10' Cutting Width
- Easy Clean Top Deck
- 1/4" x 10-1/2" Bolt-On Side Skirts
- Dual Level Lift Rods
- 35-Gallon Reservoir with Dual Filtration
- Wing Motor Cutoff - standard
- 63-HP Center Motor, 58-HP wing motor
- Deck Rings - standard
- Clevis Hitch
- Double Row Chainguards
- Hydraulically Folding Wings
- Pan Assembly
- Updraft Blades
- Replaceable Skid Shoes
- Safety Tow Chain
- Parking Jack
- Tractor Requirement: 75 PTO hp
- Standard (1) year limited parts and labor warranty.

PRODUCT ORDER CODE	DESCRIPTION	APPRX. WEIGHT		LIST PRICE
	10' FALCON Base Unit *(One Choice Required)*			
04352110	Falcon 10, 540 rpm, Pan w/Deck Rings			23,853
	WHEEL & TIRE OPTIONS *(One Choice Required)*			
00770532	(Five) Implement Tires & Wheels (6.70-15 / 6 ply)	200		854
00770542	(Five) Recapped Airplane Tires (22 ply)	390		1,577
00770527	(Five) 15" Wheels (Wheels Only)	90		222
00770522	(Five) Laminated Tires & Wheels	375		853
02986580	(Five) Foam Filled Used Airplane Tire & Wheel	375		1,137
	Mount Kits *(One Choice Required)*			
02985210	Case-IH JX-U Series			N/C
02981883	Case-IH MXU & Maxxum Series			N/C
02983169	John Deere 5425/5525/5603/5625			N/C
02991047	John Deere 6000/6010 Series			N/C
00765452	John Deere 6020/6030/7020/7030 Series			N/C
02991275	Kubota M8540/M9540			N/C
02985210	New Holland TL-A Series			N/C
02991409	New Holland T5000 Series			N/C
00751562	New Holland TS90/100/110			N/C
02981883	New Holland TS-A & T6000 Series			N/C
00751565	Universal (Modification/Fabrication Req'd at the Dealer/Customer's Expense)			N/C
	OPTIONS			
02985378	Additional Operators and Parts Manuals			45
02991066	Asy, Winch & Stand - Falcon 10/15	34		612
00769178	Captive Ball Hitch (2 5/16" Ball)	50		383
00773869	Pintle Hitch Kit (Requires Tractor Drawbar Modification)	50		776
00756846	Falcon 10: Concrete Filler for Weight Box (706 lbs.)	706		374
00755234	Stroke Control Segments	3		32
TBA	Fan Reverser Kit			526
02791800F1	Special Mower Paint (02791800)			882
00889899F3	Additional 12 Month Warranty (00889899)			3360

15' FALCON

Hydraulic Rotary Mower

STANDARD SPECIFICATIONS

- 540 PTO
- 15' Cutting Width
- Easy Clean Top Deck
- 1/4" x 10-1/2" Bolt-On Side Skirts
- Dual Level Lift Rods
- 35-Gallon Reservoir with Dual Filtration
- Wing Motor Cutoff - standard
- 63-HP Center Motor, 58-HP wing motor
- Deck Rings - standard
- Clevis Hitch
- Double Row Chainguards
- Hydraulically Folding Wings
- Pan Assembly
- Updraft Blades
- Replaceable Skid Shoes
- Safety Tow Chain
- Parking Jack
- Tractor Requirement: 75 PTO hp
- Standard (1) year limited parts and labor warranty.

PRODUCT ORDER CODE	DESCRIPTION	APPRX. WEIGHT		LIST PRICE
	15' FALCON Base Unit *(One Choice Required)*			
04522715	Falcon 15, 540 rpm, Pan w/Deck Rings	6,400		29,089
	WHEEL & TIRE OPTIONS *(One Choice Required)*			
00770533	(Six) Implement Tires & Wheels (6.70-15 / 6 ply)	240		1,025
00770543	(Six) Recapped Airplane Tires (22 ply)	468		1,893
00770528	(Six) 15" Wheels (Wheels Only)	108		265
00770523	(Six) Laminated Tires & Wheels	450		1,022
02986581	(Six) Foam Filled Used Airplane Tire & Wheel	450		1,363
	Mount Kits *(One Choice Required)*			
02985210	Case-IH JX-U Series			N/C
02981883	Case-IH MXU & Maxxum Series			N/C
02983169	John Deere 5425/5525/5603/5625			N/C
02991047	John Deere 6000/6010 Series			N/C
00765452	John Deere 6020/6030/7020/7030 Series			N/C
02991275	Kubota M8540/M9540			N/C
02985210	New Holland TL-A Series			N/C
02991409	New Holland T5000 Series			N/C
00751562	New Holland TS90/100/110			N/C
02981883	New Holland TS-A & T6000 Series			N/C
00751565	Universal (Modification/Fabrication Req'd at the Dealer/Customer's Expense)			N/C
	OPTIONS			
02985378	Additional Operators and Parts Manuals			45
02991066	Asy, Winch & Stand - Falcon 10/15	34		612
00769178	Captive Ball Hitch (2 5/16" Ball)	50		383
00773869	Pintle Hitch Kit (Requires Tractor Drawbar Modification)	50		776
00755234	Stroke Control Segments	3		32
TBA	Fan Reverser Kit			526
02791800F2	Special Mower Paint (02791800)			1105
00889899F3	Additional 12 Month Warranty (00889899)			3360

60" & 74" VERSA FLAILS

60" & 74" Mid-Mount Flail Mowers

STANDARD SPECIFICATIONS

- Welded Steel Plate Frame Braced to the Front Bolster & Rear Axle
- 60-Gallon Hydraulic Reservoir with 12-Micron Filtration
- Lift Frame Capable of Tilting the Head 180°
- Lift Frame is Capable of Lifting the Head 17" Above & 6" Below Grade Level
- Tandem Hydraulic Pump Rated @ 51 GPM @ 2500 PSI
- 2-Spool, Open Center, Tapered Positive Metering Valve

HEAD SPECIFICATIONS

- 60", 74", & 88" Flail Head
- 10-Gauge Unitized Cutter Housing
- Replaceable Skid Shoes
- 4-1/2" x 5/16" Wall Cuttershaft
- 1-5/16" Bore Greaseable, Selfaligning Cuttershaft Bearings
- 62 HP Gear Motor
- Belt Drive From Gearbox To Cuttershaft with Automatic Spring Tension
- 6" Adjustable Rear Roller
- 1/2" to 6" Cutting Height
- Available in Fine or Coarse-Cut
- Front and Rear Safety Deflectors
- Standard (1) year limited parts and labor warranty.

PRODUCT ORDER CODE	DESCRIPTION	APPRX. WEIGHT		LIST PRICE
VERSA FLAIL BASE UNIT *(One Choice Required)*				
04950004	VERSA Rotary Extreme Service Extension Arm-Rops	2300		5,740
04950005	VERSA Rotary Extreme Service Extension Arm-Cab	2300		5,740
04950008	VERSA Rotary Breakaway Extension Arm-Rops	2370		7,599
04950009	VERSA Rotary Breakaway Extension Arm-Cab	2370		7,599
04950010	VERSA Rotary Extreme Service Extension Arm-Cab-Tractor Hydraulics - Requires 2 open sets of Hydraulic Remotes	2300		4,889
04952004	VERSA Ditcher Extreme Service Extension Arm-Rops	2300		7,111
04952005	VERSA Ditcher Extreme Service Extension Arm-Cab	2300		7,111
MOWER HEAD *(One Choice Required)*				
02963836	60" Versa Flail, Belt Drive	740		12,963
02968968	60" Versa Flail, Belt Drive, Extreme-Duty Knife	734		12,761
02963837	74" Versa Flail, Belt Drive	840		13,280
02967639	74" Versa Flail, Belt Drive, Extreme-Duty Knife	834		13,281
02957866	Ditcher Head	600		12,711
OPTIONS				
02897300	Additional Operators and Parts Manuals			45
02963045	Mounting Labor & Oil			6,110
02791800VF	Special Mower Paint (02791800)			856
02968967	Special Tractor Paint			5,802
00889899VF	Additional 12 Month Warranty (00889899)			3,267

VERSA FLAIL

MOUNT KIT OPTIONS

TRACTOR DESCRIPTION	MOUNT KIT	MAXIMUM TIRE SIZE			LIST PRICE
		2WD Front	4WD Front	Rear	
Case IH					
Case-IH Farmall 85U/95U/105U Cab/2&4wd (Fender Tank)	02986594	10.00-16	12.4-24	18.4-34	6,274
Case-IH Farmall 85U/95U/105U Cab/2&4wd (Tractor Hyd/Fender Tank)	02991132	10.00-16	12.4-24	18.4-34	5,783
Case-IH Farmall 85U/95U/105U ROPS/2&4wd (Fender Tank)	02986665	10.00-16	12.4-24	18.4-34	6,274
Case-IH JX1060C/1070C/1075C Cab/2&4wd (Fender Tank)	02983986	7.50-16	11.2-24	16.9-30	4,637
Case-IH JX1060C/1070C/1075C Cab/2&4wd (Tractor Hyd/Fender Tank)	02987283	7.50-16	11.2-24	16.9-30	5,783
Case-IH JX1060C/1070C/1075C ROPS/2wd (Mid-Mt Tank)	02977579	7.50-16	N/A	16.9-30	4,637
Case-IH JX1060C/1070C/1075C ROPS/4wd (Fender Tank)	02981057	N/A	11.2-24	16.9-30	4,637
Case-IH JX1080U/1090U/1100U Cab/2&4wd (Fender Tank)	02982265	10.00-16	12.4-24	18.4-30	4,637
Case-IH JX1080U/1090U/1100U Cab/2&4wd (Tractor Hyd/Fender Tank)	02985908	10.00-16	12.4-24	18.4-30	5,783
Case-IH JX1080U/1090U/1100U ROPS/2wd (Fender Tank)	02982253	10.00-16	N/A	18.4-30	4,637
Case-IH JX1080U/1090U/1100U ROPS/4wd (Fender Tank)	02982879	N/A	12.4-24	18.4-30	4,637
Case-IH Maxxum 110/110 Pro/120 Pro/130 Pro Cab/2wd (Fender Tank)	02989121	10.00-16	N/A	18.4-34	6,274
Case-IH Maxxum 110/110 Pro/120 Pro/130 Pro Cab/2wd (Tractor Hyd/Fender Tank)	02985615	10.00-16	N/A	18.4-34	5,783
Case-IH Maxxum 110/110 Pro/120 Pro/130 Pro Cab/4wd (Fender Tank)	02985927	N/A	12.4-24	18.4-30	5,783
Case-IH Maxxum 115/125/125 Pro/140 Pro Cab/2&4wd (Fender Tank)	02984316	10.00-16	12.4-24	18.4-34	6,274
Case-IH Maxxum 115/125/125 Pro/140 Pro Cab/2&4wd (Tractor Hyd/Fender Tank)	02990039	10.00-16	12.4-24	18.4-34	5,783
Case-IH Maxxum 115/125/125 Pro/140 Pro ROPS/2&4wd (Fender Tank)	02984870	10.00-16	12.4-24	18.4-34	6,274
Case-IH MXU100/110 Cab/2wd (Mid-Mt Tank)	02980734	10.00-16	N/A	18.4-34	6,274
Case-IH MXU100/110 Cab/2wd (Tractor Hyd/Mid-Mt Tank)	02980831	10.00-16	N/A	18.4-34	5,689
Case-IH MXU100/110 Cab/4wd (Fender Tank)	02981497	N/A	13.6-24	18.4-34	5,264
Case-IH MXU100/110 ROPS/2wd (Mid-Mt Tank)	02982461	10.00-16	N/A	18.4-34	5,264
Case-IH MXU115/125/130/135 Cab/2&4wd (Fender Tank)	02984316	10.00-16	12.4-24	18.4-34	5,264
Case-IH MXU115/125/130/135 Cab/2&4wd (Tractor Hyd/Fender Tank)	02990039	10.00-16	12.4-24	18.4-34	5,783
Case-IH MXU115/125/130/135 ROPS/2&4wd (Fender Tank)	02984870	10.00-16	12.4-24	18.4-34	6,274
Challenger					
Challenger MT445B/455B/465B Cab/2&4wd (Tier III Engine Only/Fender Tank)	02989829	10.00-16	14.9-24	18.4-34	6,274
John Deere					
JD 5065M/5075M Cab/2&4wd (Fender Tank)	02988300	7.50-16	11.2-24	16.9-30	6,274
JD 5065M/5075M Cab/2&4wd (Tractor Hyd/Fender Tank)	02988303	7.50-16	11.2-24	16.9-30	5,783
JD 5065M/5075M ROPS/2&4wd (DOOS & FOOS Platform/Fender Tank)	02990178	7.50-16	11.2-24	16.9-30	6,274
JD 5083E/5093E/5101E Limited Cab/4wd (Tapped Axles-Built Before 2011/Fender Tank)	02986435	N/A	12.4-24	18.4-30	6,274
JD 5083E/5093E/5101E Limited Cab/4wd (Tapped Axles-Built Before 2011/Loader Hyd/Fender Tank)	02986717	N/A	12.4-24	18.4-30	5,783
JD 5083E/5093E/5101E Limited Cab/4wd (Ribbed Axles-Built Before 2011/Fender Tank)	02990023	N/A	12.4-24	18.4-30	6,274
JD 5083E/5093E/5101E Limited Cab/4wd (Ribbed Axles-Built Before 2011/Tractor Hyd/Fender Tank)	02990098	N/A	12.4-24	18.4-30	5,783
JD 5083E/5093E/5101E Limited Cab/4wd (MY2011/Fender Tank)	02990965	N/A	12.4-24	18.4-30	6,274
JD 5083E/5093E/5101E Limited Cab/4wd (MY2011/Tractor Hyd/Fender Tank)	02991451	N/A	12.4-24	18.4-30	5,783
JD 5083E/5093E/5101E Limited Cab/4wd (MY2011/Loader Hyd/Fender Tank)	02991449	N/A	12.4-24	18.4-30	5,783
JD 5085M/5095M/5105M Cab/2&4wd (MY2008-2011/Fender Tank)	02990965	11L-15	11.2-24	16.9-30	6,274
JD 5085M/5095M/5105M Cab/2&4wd (MY2008-2011/Tractor Hyd/Fender Tank)	02988681	11L-15	11.2-24	16.9-30	5,783
JD 5085M/5095M/5105M ROPS/2&4wd (DOOS & FOOS Platform/Fender Tank)	02988686	11L-15	11.2-24	16.9-30	6,274
JD 5225/5325 Cab/2&4wd (Fender Tank)	02984121	7.50-16	11.2-24	16.9-30	4,637
JD 5225/5325 ROPS/2wd (Fender Tank)	02988266	7.50-16	11.2-24	16.9-30	6,274
JD 5425/5525 Cab/2&4wd (Fender Tank)	02982838	7.50-16	11.2-24	16.9-30	4,637
JD 5425/5525/5625 Cab/2&4wd (Tractor Loader Valve Hyd/Fender Tank)	02982855	7.50-16	11.2-24	16.9-30	4,146
JD 5425/5525/5625 ROPS/2&4wd (Flat "IOOS" Platform/Fender Tank)	02982719	7.50-16	11.2-24	16.9-30	4,637
JD 5425/5525/5625 ROPS/2&4wd (Straddle Platform/Fender Tank)	02983600	7.50-16	11.2-24	16.9-30	4,637

OTHER SPECIFICATIONS

(1) Case-IH JX-U & Farmall U and New Holland TL-A, T4000 & T5000 series tractors require a smaller replacement battery which is not included. We recommend using Exide® #34R-84N.

VERSA FLAIL

MOUNT KIT OPTIONS

TRACTOR DESCRIPTION	MOUNT KIT	MAXIMUM TIRE SIZE			LIST PRICE
		2WD Front	4WD Front	Rear	
John Deere *(Continued)*					
JD 5603 Cab/4wd (Fender Tank)	02986435	N/A	12.4-24	18.4-30	6,274
JD 5603 Cab/4wd (Loader Hyd/Fender Tank)	02986717	N/A	12.4-24	18.4-30	5,783
JD 6100D/6115D/6130D/6140D Cab/2&4wd (540 PTO Pump/Fender Tank)	02988491	10.00-16	13.6-24	18.4-34	6,929
JD 6215/6415 Cab/2&4wd (Fender Tank)	02985096	10.00-16	12.4-24	18.4-30	6,274
JD 6215/6415 Cab/2wd (Tractor Hyd-2nd Remote Req'd/Mid-Mt Tank)	02980756	10.00-16	N/A	18.4-34	4,773
JD 6215/6415 Cab/4wd (Tractor Hyd-2nd Remote Req'd/Mid-Mt Tank)	02980768	N/A	12.4-24	18.4-34	4,773
JD 6215/6415 ROPS/2&4wd (Fender Tank)	02988644	10.00-16	12.4-24	18.4-30	6,274
JD 6120/6220/6320/6420 (Tier II) CAB/2&4wd (Fender Tank)	02985096	10.00-16	12.4-24	18.4-30	6,274
JD 6120/6220/6320/6420 (Tier II) CAB/2wd (Tractor Hyd/Mid-Mt Tank)	02980756	10.00-16	N/A	18.4-34	4,773
JD 6120/6220/6320/6420 (Tier II) CAB/4wd (Tractor Hyd/Mid-Mt Tank)	02980768	N/A	12.4-24	18.4-34	4,773
JD 6120/6220/6320/6420 (Tier II) ROPS/2&4wd (Fender Tank)	02988531	10.00-16	12.4-24	18.4-30	6,274
JD 6230/6330/6430 "Mid-Spec" Cab/2&4wd (Fender Tank)	02985543	10.00-16	12.4-24	18.4-34	6,274
JD 6230/6330/6430 "Mid-Spec" Cab/2&4wd (Tractor Hyd/Fender Tank)	02990853	10.00-16	12.4-24	18.4-34	5,783
JD 6230/6330/6430 "Mid-Spec" ROPS/2&4wd (Fender Tank)	02987161	10.00-16	12.4-24	18.4-34	6,274
JD 6230/6330/6430 "Premium" Cab/2&4wd (Fender Tank)	02985543	10.00-16	12.4-24	18.4-34	6,274
JD 6230/6330/6430 "Premium" Cab/2&4wd (540 PTO Pump/Fender Tank)	02986699	10.00-16	12.4-24	18.4-34	6,929
JD 6615/6715 Cab/2wd (Mid-Mt Tank)	02982138	11.00-16	N/A	18.4-34	5,264
JD 6615/6715 Cab/4wd (Mid-Mt Tank)	02985103	N/A	13.6-28	18.4-38	6,274
JD 7220/7320/7420/7520 Cab/2wd (Mid-Mt Tank)	02982138	11.00-16	N/A	18.4-38	5,264
JD 7220/7320/7420/7520 Cab/4wd (Mid-Mt Tank)	02985103	N/A	13.6-28	18.4-38	6,274
JD 7130/7230 "Mid" Cab/2&4wd (4 or 6 cyld/55 gal. fuel tank/Fender Tank)	02988406	11.00-16	13.6-28	18.4-38	6,274
JD 7130/7230 "Mid" Cab/2&4wd w/JD673 Loader (4 or 6 cyld/55 gal. fuel tank/Fender Tank)	02991326	11.00-16	13.6-28	18.4-38	6,274
Kubota					
Kubota M96S/M108S Cab/2&4wd (Fender Tank)	02989855	10.00-16	13.6-24	18.4-34	6,274
Kubota M96S/M108S ROPS/2wd (Fender Tank)	02987422	10.00-16	N/A	18.4-34	6,274
Massey Ferguson					
MF 5445/5455 Cab/2wd w/Std Hood (Tier II Engine Only/Fender Tank)	02985185	9.5L-15	N/A	18.4-30	6,274
MF 5460 ROPS/2wd w/Std Hood (Tier II Engine Only/Fender Tank)	02982101	10.00-16	N/A	18.4-34	5,264
New Holland					
NH T4020/4030 "Deluxe" Cab/2&4wd (Fender Tank)	02980759	9.5L-15	11.2-24	16.9-30	5,527
NH T4040/4050 "Deluxe" Cab/2&4wd (Fender Tank)	02989713	9.5L-15	11.2-24	16.9-30	6,274
NH T5040/5050/5060/5070 Cab/2&4wd (Fender Tank)	02986594	10.00-16	12.4-24	18.4-34	6,274
NH T5040/5050/5060/5070 Cab/2&4wd (Tractor Hyd/Fender Tank)	02991132	10.00-16	12.4-24	18.4-34	5,783
NH T5040/5050/5060/5070 ROPS/2&4wd (Fender Tank)	02986665	10.00-16	12.4-24	18.4-34	6,274
NH T6010/6020/6040/6060 Cab/2wd (Fender Tank)	02989121	10.00-16	N/A	18.4-34	6,274
NH T6010/6020/6040/6060 Cab/2wd (Tractor Hyd/Fender Tank)	02985615	10.00-16	N/A	18.4-34	5,783
NH T6010/6020/6040/6060 Cab/4wd (Fender Tank)	02985927	N/A	12.4-24	18.4-30	5,783
NH T6010/6020 "Delta" ROPS/2wd (Mid-Mt Tank)	02982461	10.00-16	N/A	18.4-34	6,274
NH T6030/6050/6070 Cab/2&4wd (Fender Tank)	02984316	10.00-16	12.4-24	18.4-34	6,274
NH T6030/6050/6070 Cab/2&4wd (Tractor Hyd/Fender Tank)	02990039	10.00-16	12.4-24	18.4-34	5,783
NH T6030/6050 ROPS/2&4wd (Fender Tank)	02984870	10.00-16	12.4-24	18.4-34	6,274
NH TB100/110 ROPS/2wd (Mid-Mt Tank)	02980759	10.00-16	N/A	18.4-30	5,527
NH TB100/110 ROPS/4wd	02986653	N/A	12.4-24	18.4-30	6,274
NH TL80/90/100 Cab/2&4wd (Fender Tank)	02980207	10.00-16	12.4-24	18.4-30	4,637
NH TL80/90/100 Cab/2&4wd (Tractor Hyd/Fender Tank)	02980910	10.00-16	12.4-24	18.4-30	4,146
NH TL80/90/100 ROPS/2wd (Mid-Mt Tank)	02979674	36x11-16 Air	N/A	20x20 Logging	4,637
NH TL80/90/100 ROPS/4wd (Fender Tank)	02980891	N/A	12.4-24	18.4-30	5,527
NH TL80/90/100 ROPS/4wd (Tractor Hyd/Fender Tank)	02980907	N/A	12.4-24	18.4-30	4,942
NH TL80A/90A/100A Cab/2&4wd (Fender Tank)	02982265	10.00-16	12.4-24	18.4-30	4,637
NH TL80A/90A/100A Cab/2&4wd (Tractor Hyd/Fender Tank)	02985908	10.00-16	12.4-24	18.4-30	6,274
NH TL80A/90A/100A ROPS/2wd (Fender Tank)	02982253	10.00-16	N/A	18.4-30	4,637
NH TL80A/90A/100A ROPS/4wd (Fender Tank)	02982879	N/A	12.4-24	18.4-30	4,637

OTHER SPECIFICATIONS

(1) Case-IH JX-U & Farmall U and New Holland TL-A, T4000 & T5000 series tractors require a smaller replacement battery which is not included. We recommend using Exide® #34R-84N.

VERSA FLAIL

MOUNT KIT OPTIONS

TRACTOR DESCRIPTION	MOUNT KIT	MAXIMUM TIRE SIZE			LIST PRICE
		2WD Front	4WD Front	Rear	
New Holland *(Continued)*					
NH TN55D/65D/70D/75D Cab/2&4wd (Fender Tank)	02983986	7.50-16	11.2-24	16.9-30	4,637
NH TN55D/65D/70D/75D Cab/2&4wd (Tractor Hyd/Fender Tank)	02987283	7.50-16	11.2-24	16.9-30	5,783
NH TN55/65/70/75 ROPS/2wd (Mid-Mt Tank)	02977579	7.50-16	N/A	16.9-30	4,637
NH TN55/65/70/75 ROPS/4wd (Fender Tank)	02981057	N/A	11.2-24	16.9-30	4,637
NH TN60DA/70DA/75DA Cab/2&4wd (Fender Tank)	02983986	7.50-16	11.2-24	16.9-30	4,637
NH TN60DA/70DA/75DA Cab/2&4wd (Tractor Hyd/Fender Tank)	02987283	7.50-16	11.2-24	16.9-30	5,783
NH TN60A/70A/75A ROPS/2wd (Mid-Mt Tank)	02977579	7.50-16	N/A	16.9-30	4,637
NH TN60A/70A/75A ROPS/4wd (Fender Tank)	02981057	N/A	11.2-24	16.9-30	4,637
NH TS100A/110A Cab/2wd (Mid-Mt Tank)	02980734	10.00-16	N/A	18.4-34	6,274
NH TS100A/110A Cab/2wd (Tractor Hyd/Mid-Mt Tank)	02980831	10.00-16	N/A	18.4-34	5,689
NH TS100A/110A Cab/4wd (Fender Tank)	02981497	N/A	13.6-24	18.4-34	5,264
NH TS100A/110A ROPS/2wd (Mid-Mt Tank)	02982461	10.00-16	N/A	18.4-34	5,264
NH TS115A/125A/130A/135A Cab/2&4wd (Fender Tank)	02984316	10.00-16	12.4-24	18.4-34	5,264
NH TS115A/125A/130A/135A Cab/2&4wd (Tractor Hyd/Fender Tank)	02990039	10.00-16	12.4-24	18.4-34	5,783
NH TS115A/125A/130A/135A ROPS/2&4wd (Fender Tank)	02984870	10.00-16	12.4-24	18.4-34	6,274
NH TS6020/6030 ROPS/2wd	TBA	10.00-16	N/A	18.4-34	6,274

OTHER SPECIFICATIONS

(1) Case-IH JX-U & Farmall U and New Holland TL-A, T4000 & T5000 series tractors require a smaller replacement battery which is not included. We recommend using Exide® #34R-84N.

60" VERSA ROTARY

60" Mid-Mount Rotary Mower

STANDARD SPECIFICATIONS

- Welded Steel Plate Frame Braced to the Front Bolster & Rear Axle
- 60-Gallon Hydraulic Reservoir with 12-Micron Filtration
- Lift Frame Capable of Tilting the Head 180°
- Lift Frame is Capable of Lifting the Head 17" Above & 6" Below Grade Level
- Exterior Boom Arm 5"x5"x1/4" Steel Tubing
- Stacked Hydraulic Pump Rated @ 51 GPM @ 2500 PSI
- 2-Spool, Open Center, Tapered Positive Metering Valve
- Tractor Req: 60 HP
- Cutting Capacity: 2" material

HEAD SPECIFICATIONS

- 60" Boom-Axe Head
- 1/4" Gauge Deck with 3/8" Side Skirts
- Channel Reinforcements on the Top Deck
- Spindle Mounting Plate is 1" at the Spindle
- 90 HP Gear Motor Directly Splined to the Spindle
- 4-1/2"x9" Hardened Spindle
- 1-1/4"x6" Blades, 360° Swing
- 360° Swinging Updraft Blades
- Full-Length Replaceable Skid Shoes
- Front & Rear Chain Guards
- Standard (1) year limited parts and labor warranty

PRODUCT ORDER CODE	DESCRIPTION	APPRX. WEIGHT		LIST PRICE
60" VERSA ROTARY BASE UNIT *(One Choice Required)*				
04950004	VERSA Rotary Extreme Service Extension Arm-Rops	2,300		5,740
04950005	VERSA Rotary Extreme Service Extension Arm-Cab	2,300		5,740
04950008	VERSA Rotary Breakaway Extension Arm-Rops	2,370		7,599
04950009	VERSA Rotary Breakaway Extension Arm-Cab	2,370		7,599
04950010	VERSA Rotary Extreme Service Extension Arm-Cab-Tractor Hydraulics - Requires 2 open sets of Hydraulic Remotes	2,300		4,889
04952004	VERSA Ditcher Extreme Service Extension Arm-Rops	2,300		7,111
04952005	VERSA Ditcher Extreme Service Extension Arm-Cab	2,300		7,111
MOWER HEAD *(One Choice Required)*				
02964876	60" Rotary with Bar, Front & Rear Chain Guards	1,050		8,349
02977051	60" Rotary with Bar, Front & Rear Chain Guards (1/4" deck)	1,100		8,968
02964878	60" Rotary with Pan, Front & Rear Chain Guards	1,100		9,128
02975016	60" Rotary with Pan, Front & Rear Chain Guards (1/4" deck)	1,150		9,761
02964884	60" Breakaway Rotary with Bar, Front & Rear Chain Guards	1,050		8,990
02964886	60" Breakaway Rotary with Pan, Front & Rear Chain Guards	1,100		9,849
02964888	60" Rotary with Bar, Tail Wheel, Front & Rear Chain Guards	1,140		9,111
02964890	60" Rotary with Pan, Tail Wheel, Front & Rear Chain Guards	1,190		9,900
02967263	60" Deep Deck Rotary with Bar, Front & Rear Chain Guards (1/4" deck)	1,050		9,216
02967267	60" Deep Deck Rotary with Pan, Front & Rear Chain Guards (1/4" deck)	1,125		10,168
02957866	Ditcher Head	600		12,711
OPTIONS *(Continued Next Page)*				
02897300	Additional Operators and Parts Manuals			45
02964900	Cable & Clamp Kit	5		31
02966070	Side Gauge Wheel Option (60" Deep-Deck VERSA Only)	75		515
02978378	Tilt Cylinder Kit - NH TS & 40 Series	15		670
02978383	Tilt Cylinder Kit - JD 6000,6010,6020 Series	15		423
02978391	Tilt Cylinder Kit - JD 7000, 7010 Series	15		423
02972609	Wheel Weight Kit-500 lbs.			1,170
02971789	Wheel Weight Kit-1300 lbs.			2,505
02976671	Additional 408 lbs. Kit for 1300 lbs. Wheel Weight			1,326
02976670	Additional 680 lbs. Kit for 1300 lbs. Wheel Weight			1,966

60" VERSA ROTARY

60" Mid-Mount Rotary Mower

PRODUCT ORDER CODE	DESCRIPTION	APPRX. WEIGHT		LIST PRICE
	Options *(Continued)*			
02983104	JD 5425/5525 Repl. Window (Incl. Molded Corner Window)			2,123
02982412	JD 6015 & 6020 Replacement Window Kit (Clear)			2,083
02985234	JD 6030 Replacement Window Kit (Clear) JD 7030 "Mid-Spec" Replacement Window Kit (Clear)			2,083
02982429	JD 7020 Repl. Window Kit (Tractors w/No RH Door)			2,083
02986182	JD 7030 "Prem" Window Kit (Clear) (Tractors w/No RH Door)			2,083
02983528	Case-IH JXU & NH TL-A Replacement Window Kit			2,083
02980888	Case-IH MXU & Maxxum Replacement Window Kit NH TS-A & T6000 Replacement Window Kit			2,083
02963045	Mounting Labor & Oil			6,110
02791800V6	Special Mower Paint (02791800)			860
02968967	Special Tractor Paint			5,802
00889899VM	Additional 12 Month Warranty (00889899)			2,524

60" VERSA ROTARY

MOUNT KIT OPTIONS

TRACTOR DESCRIPTION	MOUNT KIT	MAXIMUM TIRE SIZE			LIST PRICE
		2WD Front	4WD Front	Rear	
Case IH					
Case-IH Farmall 85U/95U/105U Cab/2&4wd (Fender Tank)	02986594	10.00-16	12.4-24	18.4-34	6,274
Case-IH Farmall 85U/95U/105U Cab/2&4wd (Tractor Hyd/Fender Tank)	02991132	10.00-16	12.4-24	18.4-34	5,783
Case-IH Farmall 85U/95U/105U ROPS/2&4wd (Fender Tank)	02986665	10.00-16	12.4-24	18.4-34	6,274
Case-IH JX1060C/1070C/1075C Cab/2&4wd (Fender Tank)	02983986	7.50-16	11.2-24	16.9-30	4,637
Case-IH JX1060C/1070C/1075C Cab/2&4wd (Tractor Hyd/Fender Tank)	02987283	7.50-16	11.2-24	16.9-30	5,783
Case-IH JX1060C/1070C/1075C ROPS/2wd (Mid-Mt Tank)	02977579	7.50-16	N/A	16.9-30	4,637
Case-IH JX1060C/1070C/1075C ROPS/4wd (Fender Tank)	02981057	N/A	11.2-24	16.9-30	4,637
Case-IH JX1080U/1090U/1100U Cab/2&4wd (Fender Tank)	02982265	10.00-16	12.4-24	18.4-30	4,637
Case-IH JX1080U/1090U/1100U Cab/2&4wd (Tractor Hyd/Fender Tank)	02985908	10.00-16	12.4-24	18.4-30	5,783
Case-IH JX1080U/1090U/1100U ROPS/2wd (Fender Tank)	02982253	10.00-16	N/A	18.4-30	4,637
Case-IH JX1080U/1090U/1100U ROPS/4wd (Fender Tank)	02982879	N/A	12.4-24	18.4-30	4,637
Case-IH Maxxum 110/110 Pro/120 Pro/130 Pro Cab/2wd (Fender Tank)	02989121	10.00-16	N/A	18.4-34	6,274
Case-IH Maxxum 110/110 Pro/120 Pro/130 Pro Cab/2wd (Tractor Hyd/Fender Tank)	02985615	10.00-16	N/A	18.4-34	5,783
Case-IH Maxxum 110/110 Pro/120 Pro/130 Pro Cab/4wd (Fender Tank)	02985927	N/A	12.4-24	18.4-30	5,783
Case-IH Maxxum 115/125/125 Pro/140 Pro Cab/2&4wd (Fender Tank)	02984316	10.00-16	12.4-24	18.4-34	6,274
Case-IH Maxxum 115/125/125 Pro/140 Pro Cab/2&4wd (Tractor Hyd/Fender Tank)	02990039	10.00-16	12.4-24	18.4-34	5,783
Case-IH Maxxum 115/125/125 Pro/140 Pro ROPS/2&4wd (Fender Tank)	02984870	10.00-16	12.4-24	18.4-34	6,274
Case-IH MXU100/110 Cab/2wd (Mid-Mt Tank)	02980734	10.00-16	N/A	18.4-34	6,274
Case-IH MXU100/110 Cab/2wd (Tractor Hyd/Mid-Mt Tank)	02980831	10.00-16	N/A	18.4-34	5,689
Case-IH MXU100/110 Cab/4wd (Fender Tank)	02981497	N/A	13.6-24	18.4-34	5,264
Case-IH MXU100/110 ROPS/2wd (Mid-Mt Tank)	02982461	10.00-16	N/A	18.4-34	5,264
Case-IH MXU115/125/130/135 Cab/2&4wd (Fender Tank)	02984316	10.00-16	12.4-24	18.4-34	5,264
Case-IH MXU115/125/130/135 Cab/2&4wd (Tractor Hyd/Fender Tank)	02990039	10.00-16	12.4-24	18.4-34	5,783
Case-IH MXU115/125/130/135 ROPS/2&4wd (Fender Tank)	02984870	10.00-16	12.4-24	18.4-34	6,274
Challenger					
Challenger MT445B/455B/465B Cab/2&4wd (Tier III Engine Only/Fender Tank)	02989829	10.00-16	14.9-24	18.4-34	6,274
John Deere					
JD 5065M/5075M Cab/2&4wd (Fender Tank)	02988300	7.50-16	11.2-24	16.9-30	6,274
JD 5065M/5075M Cab/2&4wd (Tractor Hyd/Fender Tank)	02988303	7.50-16	11.2-24	16.9-30	5,783
JD 5065M/5075M ROPS/2&4wd (DOOS & FOOS Platform/Fender Tank)	02990178	7.50-16	11.2-24	16.9-30	6,274

OTHER SPECIFICATIONS

(1) Case-IH JX-U & Farmall U and New Holland TL-A, T4000 & T5000 series tractors require a smaller replacement battery which is not included. We recommend using Exide® #34R-84N.

60" VERSA ROTARY

MOUNT KIT OPTIONS

TRACTOR DESCRIPTION	MOUNT KIT	MAXIMUM TIRE SIZE			LIST PRICE
		2WD Front	4WD Front	Rear	
John Deere *(Continued)*					
JD 5083E/5093E/5101E Limited Cab/4wd (Tapped Axles-Built Before 2011/Fender Tank)	02986435	N/A	12.4-24	18.4-30	6,274
JD 5083E/5093E/5101E Limited Cab/4wd (Tapped Axles-Built Before 2011/Loader Hyd/Fender Tank)	02986717	N/A	12.4-24	18.4-30	5,783
JD 5083E/5093E/5101E Limited Cab/4wd (Ribbed Axles-Built Before 2011/Fender Tank)	02990023	N/A	12.4-24	18.4-30	6,274
JD 5083E/5093E/5101E Limited Cab/4wd (Ribbed Axles-Built Before 2011/Tractor Hyd/Fender Tank)	02990098	N/A	12.4-24	18.4-30	5,783
JD 5083E/5093E/5101E Limited Cab/4wd (MY2011/Fender Tank)	02990965	N/A	12.4-24	18.4-30	6,274
JD 5083E/5093E/5101E Limited Cab/4wd (MY2011/Tractor Hyd/Fender Tank)	02991451	N/A	12.4-24	18.4-30	5,783
JD 5083E/5093E/5101E Limited Cab/4wd (MY2011/Loader Hyd/Fender Tank)	02991449	N/A	12.4-24	18.4-30	5,783
JD 5085M/5095M/5105M Cab/2&4wd (MY2008-2011/Fender Tank)	02990965	11L-15	11.2-24	16.9-30	6,274
JD 5085M/5095M/5105M Cab/2&4wd (MY2008-2011/Tractor Hyd/Fender Tank)	02988681	11L-15	11.2-24	16.9-30	5,783
JD 5085M/5095M/5105M ROPS/2&4wd (DOOS & FOOS Platform/Fender Tank)	02988686	11L-15	11.2-24	16.9-30	6,274
JD 5225/5325 Cab/2&4wd (Fender Tank)	02984121	7.50-16	11.2-24	16.9-30	4,637
JD 5225/5325 ROPS/2wd (Fender Tank)	02988266	7.50-16	11.2-24	16.9-30	6,274
JD 5425/5525 Cab/2&4wd (Fender Tank)	02982838	7.50-16	11.2-24	16.9-30	4,637
JD 5425/5525/5625 Cab/2&4wd (Tractor Loader Valve Hyd/Fender Tank)	02982855	7.50-16	11.2-24	16.9-30	4,146
JD 5425/5525/5625 ROPS/2&4wd (Flat "IOOS" Platform/Fender Tank)	02982719	7.50-16	11.2-24	16.9-30	4,637
JD 5425/5525/5625 ROPS/2&4wd (Straddle Platform/Fender Tank)	02983600	7.50-16	11.2-24	16.9-30	4,637
JD 5603 Cab/4wd (Fender Tank)	02986435	N/A	12.4-24	18.4-30	6,274
JD 5603 Cab/4wd (Loader Hyd/Fender Tank)	02986717	N/A	12.4-24	18.4-30	5,783
JD 6100D/6115D/6130D/6140D Cab/2&4wd (540 PTO Pump/Fender Tank)	02988491	10.00-16	13.6-24	18.4-34	6,929
JD 6215/6415 Cab/2&4wd (Fender Tank)	02985096	10.00-16	12.4-24	18.4-30	6,274
JD 6215/6415 Cab/2wd (Tractor Hyd-2nd Remote Req'd/Mid-Mt Tank)	02980756	10.00-16	N/A	18.4-34	4,773
JD 6215/6415 Cab/4wd (Tractor Hyd-2nd Remote Req'd/Mid-Mt Tank)	02980768	N/A	12.4-24	18.4-34	4,773
JD 6215/6415 ROPS/2&4wd (Fender Tank)	02988644	10.00-16	12.4-24	18.4-30	6,274
JD 6120/6220/6320/6420 (Tier II) Cab/2&4wd (Fender Tank)	02985096	10.00-16	12.4-24	18.4-30	6,274
JD 6120/6220/6320/6420 (Tier II) CAB/2wd (Tractor Hyd/Mid-Mt Tank)	02980756	10.00-16	N/A	18.4-34	4,773
JD 6120/6220/6320/6420 (Tier II) CAB/4wd (Tractor Hyd/Mid-Mt Tank)	02980768	N/A	12.4-24	18.4-34	4,773
JD 6120/6220/6320/6420 (Tier II) ROPS/2&4wd (Fender Tank)	02988531	10.00-16	12.4-24	18.4-30	6,274
JD 6230/6330/6430 "Mid-Spec" Cab/2&4wd (Fender Tank)	02985543	10.00-16	12.4-24	18.4-34	6,274
JD 6230/6330/6430 "Mid-Spec" Cab/2&4wd (Tractor Hyd/Fender Tank)	02990853	10.00-16	12.4-24	18.4-34	5,783
JD 6230/6330/6430 "Mid-Spec" ROPS/2&4wd (Fender Tank)	02987161	10.00-16	12.4-24	18.4-34	6,274
JD 6230/6330/6430 "Premium" Cab/2&4wd (Fender Tank)	02985543	10.00-16	12.4-24	18.4-34	6,274
JD 6230/6330/6430 "Premium" Cab/2&4wd (540 PTO Pump/Fender Tank)	02986699	10.00-16	12.4-24	18.4-34	6,929
JD 6615/6715 Cab/2wd (Mid-Mt Tank)	02982138	11.00-16	N/A	18.4-34	5,264
JD 6615/6715 Cab/4wd (Mid-Mt Tank)	02985103	N/A	13.6-28	18.4-38	6,274
JD 7220/7320/7420/7520 Cab/2wd (Mid-Mt Tank)	02982138	11.00-16	N/A	18.4-38	5,264
JD 7220/7320/7420/7520 Cab/4wd (Mid-Mt Tank)	02985103	N/A	13.6-28	18.4-38	6,274
JD 7130/7230 "Mid" Cab/2&4wd (4 or 6 cyld/55 gal. fuel tank/Fender Tank)	02988406	11.00-16	13.6-28	18.4-38	6,274
JD 7130/7230 "Mid" Cab/2&4wd w/JD673 Loader (4 or 6 cyld/55 gal. fuel tank/Fender Tank)	02991326	11.00-16	13.6-28	18.4-38	6,274

60" VERSA ROTARY

MOUNT KIT OPTIONS

TRACTOR DESCRIPTION	MOUNT KIT	MAXIMUM TIRE SIZE			LIST PRICE
		2WD Front	4WD Front	Rear	
Kubota					
Kubota M96S/M108S Cab/2&4wd (Fender Tank)	02989855	10.00-16	13.6-24	18.4-34	6,274
Kubota M96S/M108S ROPS/2wd (Fender Tank)	02987422	10.00-16	N/A	18.4-34	6,274
Massey Ferguson					
MF 5445/5455 Cab/2wd w/Std Hood (Tier II Engine Only/Fender Tank)	02985185	9.5L-15	N/A	18.4-30	6,274
MF 5460 ROPS/2wd w/Std Hood (Tier II Engine Only/Fender Tank)	02982101	10.00-16	N/A	18.4-34	5,264
New Holland					
NH T4020/4030 "Deluxe" Cab/2&4wd (Fender Tank)	02987271	9.5L-15	11.2-24	16.9-30	6,274
NH T4040/4050 "Deluxe" Cab/2&4wd (Fender Tank)	02989713	9.5L-15	11.2-24	16.9-30	6,274
NH T5040/5050/5060/5070 Cab/2&4wd (Fender Tank)	02986594	10.00-16	12.4-24	18.4-34	6,274
NH T5040/5050/5060/5070 Cab/2&4wd (Tractor Hyd/Fender Tank)	02991132	10.00-16	12.4-24	18.4-34	5,783
NH T5040/5050/5060/5070 ROPS/2&4wd (Fender Tank)	02986665	10.00-16	12.4-24	18.4-34	6,274
NH T6010/6020/6040/6060 Cab/2wd (Fender Tank)	02989121	10.00-16	N/A	18.4-34	6,274
NH T6010/6020/6040/6060 Cab/2wd (Tractor Hyd/Fender Tank)	02985615	10.00-16	N/A	18.4-34	5,783
NH T6010/6020/6040/6060 Cab/4wd (Fender Tank)	02985927	N/A	12.4-24	18.4-30	5,783
NH T6010/6020 "Delta" ROPS/2wd (Mid-Mt Tank)	02982461	10.00-16	N/A	18.4-34	6,274
NH T6030/6050/6070 Cab/2&4wd (Fender Tank)	02984316	10.00-16	12.4-24	18.4-34	6,274
NH T6030/6050/6070 Cab/2&4wd (Tractor Hyd/Fender Tank)	02990039	10.00-16	12.4-24	18.4-34	5,783
NH T6030/6050 ROPS/2&4wd (Fender Tank)	02984870	10.00-16	12.4-24	18.4-34	6,274
NH TB100/110 ROPS/2wd (Mid-Mt Tank)	02980759	10.00-16	N/A	18.4-30	5,527
NH TB100/110 ROPS/4wd	02986653	N/A	12.4-24	18.4-30	6,274
NH TL80/90/100 Cab/2&4wd (Fender Tank)	02980207	10.00-16	12.4-24	18.4-30	4,637
NH TL80/90/100 Cab/2&4wd (Tractor Hyd/Fender Tank)	02980910	10.00-16	12.4-24	18.4-30	4,146
NH TL80/90/100 ROPS/2wd (Mid-Mt Tank)	02979674	36x11-16 Air	N/A	20x20 Logging	4,637
NH TL80/90/100 ROPS/4wd (Fender Tank)	02980891	N/A	12.4-24	18.4-30	5,527
NH TL80/90/100 ROPS/4wd (Tractor Hyd/Fender Tank)	02980907	N/A	12.4-24	18.4-30	4,942
NH TL80A/90A/100A Cab/2&4wd (Fender Tank)	02982265	10.00-16	12.4-24	18.4-30	4,637
NH TL80A/90A/100A Cab/2&4wd (Tractor Hyd/Fender Tank)	02985908	10.00-16	12.4-24	18.4-30	6,274
NH TL80A/90A/100A ROPS/2wd (Fender Tank)	02982253	10.00-16	N/A	18.4-30	4,637
NH TL80A/90A/100A ROPS/4wd (Fender Tank)	02982879	N/A	12.4-24	18.4-30	4,637
NH TN55D/65D/70D/75D Cab/2&4wd (Fender Tank)	02983986	7.50-16	11.2-24	16.9-30	4,637
NH TN55D/65D/70D/75D Cab/2&4wd (Tractor Hyd/Fender Tank)	02987283	7.50-16	11.2-24	16.9-30	5,783
NH TN55/65/70/75 ROPS/2wd (Mid-Mt Tank)	02977579	7.50-16	N/A	16.9-30	4,637
NH TN55/65/70/75 ROPS/4wd (Fender Tank)	02981057	N/A	11.2-24	16.9-30	4,637

OTHER SPECIFICATIONS

(1) Case-IH JX-U & Farmall U and New Holland TL-A, T4000 & T5000 series tractors require a smaller replacement battery which is not included. We recommend using Exide® #34R-84N.

60" VERSA ROTARY

MOUNT KIT OPTIONS

TRACTOR DESCRIPTION	MOUNT KIT	MAXIMUM TIRE SIZE			LIST PRICE
		2WD Front	4WD Front	Rear	
New Holland					
NH TN60DA/70DA/75DA Cab/2&4wd (Fender Tank)	02983986	7.50-16	11.2-24	16.9-30	4,637
NH TN60DA/70DA/75DA Cab/2&4wd (Tractor Hyd/Fender Tank)	02987283	7.50-16	11.2-24	16.9-30	5,783
NH TN60A/70A/75A ROPS/2wd (Mid-Mt Tank)	02977579	7.50-16	N/A	16.9-30	4,637
NH TN60A/70A/75A ROPS/4wd (Fender Tank)	02981057	N/A	11.2-24	16.9-30	4,637
NH TS100A/110A Cab/2wd (Mid-Mt Tank)	02980734	10.00-16	N/A	18.4-34	6,274
NH TS100A/110A Cab/2wd (Tractor Hyd/Mid-Mt Tank)	02980831	10.00-16	N/A	18.4-34	5,689
NH TS100A/110A Cab/4wd (Fender Tank)	02981497	N/A	13.6-24	18.4-34	5,264
NH TS100A/110A ROPS/2wd (Mid-Mt Tank)	02982461	10.00-16	N/A	18.4-34	5,264
NH TS115A/125A/130A/135A Cab/2&4wd (Fender Tank)	02984316	10.00-16	12.4-24	18.4-34	5,264
NH TS115A/125A/130A/135A Cab/2&4wd (Tractor Hyd/Fender Tank)	02990039	10.00-16	12.4-24	18.4-34	5,783
NH TS115A/125A/130A/135A ROPS/2&4wd (Fender Tank)	02984870	10.00-16	12.4-24	18.4-34	6,274
NH TS6020/6030 ROPS/2wd	TBA	10.00-16	N/A	18.4-34	6,274

OTHER SPECIFICATIONS

(1) Case-IH JX-U & Farmall U and New Holland TL-A, T4000 & T5000 series tractors require a smaller replacement battery which is not included. We recommend using Exide® #34R-84N.

72" VERSA ROTARY

72" Mid-Mount Rotary Mower

STANDARD SPECIFICATIONS

- Welded Steel Plate Frame Braced to the Front Bolster & Rear Axle
- 60-Gallon Hydraulic Reservoir with 12-Micron Filtration
- Lift Frame Capable of Tilting the Head 180°
- Lift Frame is Capable of Lifting the Head 17" Above & 6" Below Grade Level
- Stacked Hydraulic Pump Rated @ 51 GPM @ 2500 PSI
- 2-Spool, Open Center, Tapered Positive Metering Valve
- Tractor Req: 60 HP
- Cutting Capacity: 2" material

HEAD SPECIFICATIONS

- 72" Rotary Head
- 1/4" Gauge Deck with 3/8" Side Skirts
- Channel Reinforcements on the Top Deck
- Spindle Mounting Plate is 1" at the Spindle
- 90 HP Gear Motor Directly Splined to the Spindle
- 4-1/2"x9" Hardened Spindle
- 1-1/4"x6" Blade Bar
- 360° Swinging Updraft Blades
- Full-Length Replaceable Skid Shoes
- Front & Rear Chain Guards
- Standard (1) year limited parts and labor warranty.

PRODUCT ORDER CODE	DESCRIPTION	APPRX. WEIGHT		LIST PRICE
	72" VERSA ROTARY BASE UNIT *(One Choice Required)*			
04950004	VERSA Rotary Extreme Service Extension Arm-Rops	2300		5,740
04950005	VERSA Rotary Extreme Service Extension Arm-Cab	2300		5,740
04952004	VERSA Ditcher Extreme Service Extension Arm-Rops	2300		7,111
04952005	VERSA Ditcher Extreme Service Extension Arm-Cab	2300		7,111
	MOWER HEAD *(One Choice Required)*			
02964880	72" Rotary with Bar, Front & Rear Chain Guards	1270		9,636
02964882	72" Rotary with Pan, Front & Rear Chain Guards	1320		10,347
02957866	Ditcher Head	600		12,711
	OPTIONS *(Continued Next Page)*			
02897300	Additional Operators and Parts Manuals			45
02938200	Tail Wheel Kit			738
02964901	Cable and Clamp Kit			39
02978383	Tilt Cylinder Kit - JD 6000,6010,6020 Series	15		423
02978391	Tilt Cylinder Kit - JD 7000, 7010 Series	15		423
02972609	Wheel Weight Kit-500 lbs.			1,170
02971789	Wheel Weight Kit-1300 lbs.			2,505
02976671	Additional 408 lbs. Kit for 1300 lbs. Wheel Weight			1,326
02976670	Additional 680 lbs. Kit for 1300 lbs. Wheel Weight			1,966
02983104	JD 5425/5525 Repl. Window (Incl. Molded Corner Window)			2,123
02982412	JD 6015 & 6020 Replacement Window Kit (Clear)			2,083
02985234	JD 6030 Replacement Window Kit (Clear) JD 7030 "Mid-Spec" Replacement Window Kit (Clear)			2,083
02982429	JD 7020 Repl. Window Kit (Tractors w/No RH Door)			2,083
02986182	JD 7030 "Prem" Window Kit (Clear) (Tractors w/No RH Door)			2,083
02983528	Case-IH JXU & NH TL-A Replacement Window Kit			2,083
02980888	Case-IH MXU & Maxxum Replacement Window Kit NH TS-A & T6000 Replacement Window Kit			2,083
02963045	Mounting Labor & Oil			6,110
02791800V7	Special Mower Paint (02791800)			882
02968967	Special Tractor Paint			5,802
00889899VM	Additional 12 Month Warranty (00889899)			2,524

72" VERSA ROTARY

MOUNT KIT OPTIONS

TRACTOR DESCRIPTION	MOUNT KIT	MAXIMUM TIRE SIZE			LIST PRICE
		2WD Front	4WD Front	Rear	
Case IH					
Case-IH Farmall 85U/95U/105U Cab/2&4wd (Fender Tank)	02986594	10.00-16	12.4-24	18.4-34	6,274
Case-IH Farmall 85U/95U/105U Cab/2&4wd (Tractor Hyd/Fender Tank)	02991132	10.00-16	12.4-24	18.4-34	5,783
Case-IH Farmall 85U/95U/105U ROPS/2&4wd (Fender Tank)	02986665	10.00-16	12.4-24	18.4-34	6,274
Case-IH JX1060C/1070C/1075C Cab/2&4wd (Fender Tank)	02983986	7.50-16	11.2-24	16.9-30	4,637
Case-IH JX1060C/1070C/1075C Cab/2&4wd (Tractor Hyd/Fender Tank)	02987283	7.50-16	11.2-24	16.9-30	5,783
Case-IH JX1060C/1070C/1075C ROPS/2wd (Mid-Mt Tank)	02977579	7.50-16	N/A	16.9-30	4,637
Case-IH JX1060C/1070C/1075C ROPS/4wd (Fender Tank)	02981057	N/A	11.2-24	16.9-30	4,637
Case-IH JX1080U/1090U/1100U Cab/2&4wd (Fender Tank)	02982265	10.00-16	12.4-24	18.4-30	4,637
Case-IH JX1080U/1090U/1100U Cab/2&4wd (Tractor Hyd/Fender Tank)	02985908	10.00-16	12.4-24	18.4-30	5,783
Case-IH JX1080U/1090U/1100U ROPS/2wd (Fender Tank)	02982253	10.00-16	N/A	18.4-30	4,637
Case-IH JX1080U/1090U/1100U ROPS/4wd (Fender Tank)	02982879	N/A	12.4-24	18.4-30	4,637
Case-IH Maxxum 110/110 Pro/120 Pro/130 Pro Cab/2wd (Fender Tank)	02989121	10.00-16	N/A	18.4-34	6,274
Case-IH Maxxum 110/110 Pro/120 Pro/130 Pro Cab/2wd (Tractor Hyd/Fender Tank)	02985615	10.00-16	N/A	18.4-34	5,783
Case-IH Maxxum 110/110 Pro/120 Pro/130 Pro Cab/4wd (Fender Tank)	02985927	N/A	12.4-24	18.4-30	5,783
Case-IH Maxxum 115/125/125 Pro/140 Pro Cab/2&4wd (Fender Tank)	02984316	10.00-16	12.4-24	18.4-34	6,274
Case-IH Maxxum 115/125/125 Pro/140 Pro Cab/2&4wd (Tractor Hyd/Fender Tank)	02990039	10.00-16	12.4-24	18.4-34	5,783
Case-IH Maxxum 115/125/125 Pro/140 Pro ROPS/2&4wd (Fender Tank)	02984870	10.00-16	12.4-24	18.4-34	6,274
Case-IH MXU100/110 Cab/2wd (Mid-Mt Tank)	02980734	10.00-16	N/A	18.4-34	6,274
Case-IH MXU100/110 Cab/2wd (Tractor Hyd/Mid-Mt Tank)	02980831	10.00-16	N/A	18.4-34	5,689
Case-IH MXU100/110 Cab/4wd (Fender Tank)	02981497	N/A	13.6-24	18.4-34	5,264
Case-IH MXU100/110 ROPS/2wd (Mid-Mt Tank)	02982461	10.00-16	N/A	18.4-34	5,264
Case-IH MXU115/125/130/135 Cab/2&4wd (Fender Tank)	02984316	10.00-16	12.4-24	18.4-34	5,264
Case-IH MXU115/125/130/135 Cab/2&4wd (Tractor Hyd/Fender Tank)	02990039	10.00-16	12.4-24	18.4-34	5,783
Case-IH MXU115/125/130/135 ROPS/2&4wd (Fender Tank)	02984870	10.00-16	12.4-24	18.4-34	6,274
Challenger					
Challenger MT445B/455B/465B Cab/2&4wd (Tier III Engine Only/Fender Tank)	02989829	10.00-16	14.9-24	18.4-34	6,274
John Deere					
JD 5065M/5075M Cab/2&4wd (Fender Tank)	02988300	7.50-16	11.2-24	16.9-30	6,274
JD 5065M/5075M Cab/2&4wd (Tractor Hyd/Fender Tank)	02988303	7.50-16	11.2-24	16.9-30	5,783
JD 5065M/5075M ROPS/2&4wd (DOOS & FOOS Platform/Fender Tank)	02990178	7.50-16	11.2-24	16.9-30	6,274
JD 5083E/5093E/5101E Limited Cab/4wd (Tapped Axles-Built Before 2011/Fender Tank)	02986435	N/A	12.4-24	18.4-30	6,274
JD 5083E/5093E/5101E Limited Cab/4wd (Tapped Axles-Built Before 2011/Loader Hyd/Fender Tank)	02986717	N/A	12.4-24	18.4-30	5,783
JD 5083E/5093E/5101E Limited Cab/4wd (Ribbed Axles-Built Before 2011/Fender Tank)	02990023	N/A	12.4-24	18.4-30	6,274
JD 5083E/5093E/5101E Limited Cab/4wd (Ribbed Axles-Built Before 2011/Tractor Hyd/Fender Tank)	02990098	N/A	12.4-24	18.4-30	5,783
JD 5083E/5093E/5101E Limited Cab/4wd (MY2011/Fender Tank)	02990965	N/A	12.4-24	18.4-30	6,274
JD 5083E/5093E/5101E Limited Cab/4wd (MY2011/Tractor Hyd/Fender Tank)	02991451	N/A	12.4-24	18.4-30	5,783
JD 5083E/5093E/5101E Limited Cab/4wd (MY2011/Loader Hyd/Fender Tank)	02991449	N/A	12.4-24	18.4-30	5,783
JD 5085M/5095M/5105M Cab/2&4wd (MY2008-2011/Fender Tank)	02990965	11L-15	11.2-24	16.9-30	6,274
JD 5085M/5095M/5105M Cab/2&4wd (MY2008-2011/Tractor Hyd/Fender Tank)	02988681	11L-15	11.2-24	16.9-30	5,783
JD 5085M/5095M/5105M ROPS/2&4wd (DOOS & FOOS Platform/Fender Tank)	02988686	11L-15	11.2-24	16.9-30	6,274

OTHER SPECIFICATIONS

(1) Case-IH JX-U & Farmall U and New Holland TL-A, T4000 & T5000 series tractors require a smaller replacement battery which is not included. We recommend using Exide® #34R-84N.

72" VERSA ROTARY

MOUNT KIT OPTIONS

TRACTOR DESCRIPTION	MOUNT KIT	MAXIMUM TIRE SIZE			LIST PRICE
		2WD Front	4WD Front	Rear	
John Deere *(Continued)*					
JD 5225/5325 Cab/2&4wd (Fender Tank)	02984121	7.50-16	11.2-24	16.9-30	4,637
JD 5225/5325 ROPS/2wd (Fender Tank)	02988266	7.50-16	11.2-24	16.9-30	6,274
JD 5425/5525 Cab/2&4wd (Fender Tank)	02982838	7.50-16	11.2-24	16.9-30	4,637
JD 5425/5525/5625 Cab/2&4wd (Tractor Loader Valve Hyd/Fender Tank)	02982855	7.50-16	11.2-24	16.9-30	4,146
JD 5425/5525/5625 ROPS/2&4wd (Flat "IOOS" Platform/Fender Tank)	02982719	7.50-16	11.2-24	16.9-30	4,637
JD 5425/5525/5625 ROPS/2&4wd (Straddle Platform/Fender Tank)	02983600	7.50-16	11.2-24	16.9-30	4,637
JD 5603 Cab/4wd (Fender Tank)	02986435	N/A	12.4-24	18.4-30	6,274
JD 5603 Cab/4wd (Loader Hyd/Fender Tank)	02986717	N/A	12.4-24	18.4-30	5,783
JD 6100D/6115D/6130D/6140D Cab/2&4wd (540 PTO Pump/Fender Tank)	02988491	10.00-16	13.6-24	18.4-34	6,929
JD 6215/6415 Cab/2&4wd (Fender Tank)	02985096	10.00-16	12.4-24	18.4-30	6,274
JD 6215/6415 Cab/2wd (Tractor Hyd-2nd Remote Req'd/Mid-Mt Tank)	02980756	10.00-16	N/A	18.4-34	4,773
JD 6215/6415 Cab/4wd (Tractor Hyd-2nd Remote Req'd/Mid-Mt Tank)	02980768	N/A	12.4-24	18.4-34	4,773
JD 6215/6415 ROPS/2&4wd (Fender Tank)	02988644	10.00-16	12.4-24	18.4-30	6,274
JD 6120/6220/6320/6420 (Tier II) CAB/2&4wd (Fender Tank)	02985096	10.00-16	12.4-24	18.4-30	6,274
JD 6120/6220/6320/6420 (Tier II) CAB/2wd (Tractor Hyd/Mid-Mt Tank)	02980756	10.00-16	N/A	18.4-34	4,773
JD 6120/6220/6320/6420 (Tier II) CAB/4wd (Tractor Hyd/Mid-Mt Tank)	02980768	N/A	12.4-24	18.4-34	4,773
JD 6120/6220/6320/6420 (Tier II) ROPS/2&4wd (Fender Tank)	02988531	10.00-16	12.4-24	18.4-30	6,274
JD 6230/6330/6430 "Mid-Spec" Cab/2&4wd (Fender Tank)	02985543	10.00-16	12.4-24	18.4-34	6,274
JD 6230/6330/6430 "Mid-Spec" Cab/2&4wd (Tractor Hyd/Fender Tank)	02990853	10.00-16	12.4-24	18.4-34	5,783
JD 6230/6330/6430 "Mid-Spec" ROPS/2&4wd (Fender Tank)	02987161	10.00-16	12.4-24	18.4-34	6,274
JD 6230/6330/6430 "Premium" Cab/2&4wd (Fender Tank)	02985543	10.00-16	12.4-24	18.4-34	6,274
JD 6230/6330/6430 "Premium" Cab/2&4wd (540 PTO Pump/Fender Tank)	02986699	10.00-16	12.4-24	18.4-34	6,929
JD 6615/6715 Cab/2wd (Mid-Mt Tank)	02982138	11.00-16	N/A	18.4-34	5,264
JD 6615/6715 Cab/4wd (Mid-Mt Tank)	02985103	N/A	13.6-28	18.4-38	6,274
JD 7220/7320/7420/7520 Cab/2wd (Mid-Mt Tank)	02982138	11.00-16	N/A	18.4-38	5,264
JD 7220/7320/7420/7520 Cab/4wd (Mid-Mt Tank)	02985103	N/A	13.6-28	18.4-38	6,274
JD 7130/7230 "Mid" Cab/2&4wd (4 or 6 cyld/55 gal. fuel tank/Fender Tank)	02988406	11.00-16	13.6-28	18.4-38	6,274
JD 7130/7230 "Mid" Cab/2&4wd w/JD673 Loader (4 or 6 cyld/55 gal. fuel tank/Fender Tank)	02991326	11.00-16	13.6-28	18.4-38	6,274
Kubota					
Kubota M96S/M108S Cab/2&4wd (Fender Tank)	02989855	10.00-16	13.6-24	18.4-34	6,274
Kubota M96S/M108S ROPS/2wd (Fender Tank)	02987422	10.00-16	N/A	18.4-34	6,274
Massey Ferguson					
MF 5445/5455 Cab/2wd w/Std Hood (Tier II Engine Only/Fender Tank)	02985185	9.5L-15	N/A	18.4-30	6,274
MF 5460 ROPS/2wd w/Std Hood (Tier II Engine Only/Fender Tank)	02982101	10.00-16	N/A	18.4-34	5,264
New Holland					
NH T4020/4030 "Deluxe" Cab/2&4wd (Fender Tank)	02987271	9.5L-15	11.2-24	16.9-30	6,274
NH T4040/4050 "Deluxe" Cab/2&4wd (Fender Tank)	02989713	9.5L-15	11.2-24	16.9-30	6,274
NH T5040/5050/5060/5070 Cab/2&4wd (Fender Tank)	02986594	10.00-16	12.4-24	18.4-34	6,274
NH T5040/5050/5060/5070 Cab/2&4wd (Tractor Hyd/Fender Tank)	02991132	10.00-16	12.4-24	18.4-34	5,783
NH T5040/5050/5060/5070 ROPS/2&4wd (Fender Tank)	02986665	10.00-16	12.4-24	18.4-34	6,274
NH T6010/6020/6040/6060 Cab/2wd (Fender Tank)	02989121	10.00-16	N/A	18.4-34	6,274
NH T6010/6020/6040/6060 Cab/2wd (Tractor Hyd/Fender Tank)	02985615	10.00-16	N/A	18.4-34	5,783
NH T6010/6020/6040/6060 Cab/4wd (Fender Tank)	02985927	N/A	12.4-24	18.4-30	5,783
NH T6010/6020 "Delta" ROPS/2wd (Mid-Mt Tank)	02982461	10.00-16	N/A	18.4-34	6,274
NH T6030/6050/6070 Cab/2&4wd (Fender Tank)	02984316	10.00-16	12.4-24	18.4-34	6,274
NH T6030/6050/6070 Cab/2&4wd (Tractor Hyd/Fender Tank)	02990039	10.00-16	12.4-24	18.4-34	5,783
NH T6030/6050 ROPS/2&4wd (Fender Tank)	02984870	10.00-16	12.4-24	18.4-34	6,274
NH TB100/110 ROPS/2wd (Mid-Mt Tank)	02980759	10.00-16	N/A	18.4-30	5,527
NH TB100/110 ROPS/4wd	02986653	N/A	12.4-24	18.4-30	6,274

OTHER SPECIFICATIONS

(1) Case-IH JX-U & Farmall U and New Holland TL-A, T4000 & T5000 series tractors require a smaller replacement battery which is not included. We recommend using Exide® #34R-84N.

72" VERSA ROTARY

MOUNT KIT OPTIONS

TRACTOR DESCRIPTION	MOUNT KIT	MAXIMUM TIRE SIZE			LIST PRICE
		2WD Front	4WD Front	Rear	
New Holland *(Continued)*					
NH TL80/90/100 Cab/2&4wd (Fender Tank)	02980207	10.00-16	12.4-24	18.4-30	4,637
NH TL80/90/100 Cab/2&4wd (Tractor Hyd/Fender Tank)	02980910	10.00-16	12.4-24	18.4-30	4,146
NH TL80/90/100 ROPS/2wd (Mid-Mt Tank)	02979674	36x11-16 Air	N/A	20x20 Logging	4,637
NH TL80/90/100 ROPS/4wd (Fender Tank)	02980891	N/A	12.4-24	18.4-30	5,527
NH TL80/90/100 ROPS/4wd (Tractor Hyd/Fender Tank)	02980907	N/A	12.4-24	18.4-30	4,942
NH TL80A/90A/100A Cab/2&4wd (Fender Tank)	02982265	10.00-16	12.4-24	18.4-30	4,637
NH TL80A/90A/100A Cab/2&4wd (Tractor Hyd/Fender Tank)	02985908	10.00-16	12.4-24	18.4-30	6,274
NH TL80A/90A/100A ROPS/2wd (Fender Tank)	02982253	10.00-16	N/A	18.4-30	4,637
NH TL80A/90A/100A ROPS/4wd (Fender Tank)	02982879	N/A	12.4-24	18.4-30	4,637
NH TN55D/65D/70D/75D Cab/2&4wd (Fender Tank)	02983986	7.50-16	11.2-24	16.9-30	4,637
NH TN55D/65D/70D/75D Cab/2&4wd (Tractor Hyd/Fender Tank)	02987283	7.50-16	11.2-24	16.9-30	5,783
NH TN55/65/70/75 ROPS/2wd (Mid-Mt Tank)	02977579	7.50-16	N/A	16.9-30	4,637
NH TN55/65/70/75 ROPS/4wd (Fender Tank)	02981057	N/A	11.2-24	16.9-30	4,637
NH TN60DA/70DA/75DA Cab/2&4wd (Fender Tank)	02983986	7.50-16	11.2-24	16.9-30	4,637
NH TN60DA/70DA/75DA Cab/2&4wd (Tractor Hyd/Fender Tank)	02987283	7.50-16	11.2-24	16.9-30	5,783
NH TN60A/70A/75A ROPS/2wd (Mid-Mt Tank)	02977579	7.50-16	N/A	16.9-30	4,637
NH TN60A/70A/75A ROPS/4wd (Fender Tank)	02981057	N/A	11.2-24	16.9-30	4,637
NH TS100A/110A Cab/2wd (Mid-Mt Tank)	02980734	10.00-16	N/A	18.4-34	6,274
NH TS100A/110A Cab/2wd (Tractor Hyd/Mid-Mt Tank)	02980831	10.00-16	N/A	18.4-34	5,689
NH TS100A/110A Cab/4wd (Fender Tank)	02981497	N/A	13.6-24	18.4-34	5,264
NH TS100A/110A ROPS/2wd (Mid-Mt Tank)	02982461	10.00-16	N/A	18.4-34	5,264
NH TS115A/125A/130A/135A Cab/2&4wd (Fender Tank)	02984316	10.00-16	12.4-24	18.4-34	5,264
NH TS115A/125A/130A/135A Cab/2&4wd (Tractor Hyd/Fender Tank)	02990039	10.00-16	12.4-24	18.4-34	5,783
NH TS115A/125A/130A/135A ROPS/2&4wd (Fender Tank)	02984870	10.00-16	12.4-24	18.4-34	6,274
NH TS6020/6030 ROPS/2wd	TBA	10.00-16	N/A	18.4-34	6,274

OTHER SPECIFICATIONS

(1) Case-IH JX-U & Farmall U and New Holland TL-A, T4000 & T5000 series tractors require a smaller replacement battery which is not included. We recommend using Exide® #34R-84N.

VERSA PRO FLAIL

Flail Mower

BASE UNIT SPECIFICATIONS

- 21'8" Overall Cutting Width
- 3/8" Box Fully Welded Frame
- 19-Gallon Reservoir with 10 Micron Filtration
- Tandem Piston Pumps Rated @ 48 GPM @ 3800 PSI
- Standard (1) year limited parts and labor warranty

WING MOWER SPECIFICATIONS

- 88" Cutting Width
- Two 10-Gauge Unitized Cutter Housings
- 1/2" Inboard & 5/16" Outboard Side Plates
- Replaceable Skid Shoes
- 4-1/2" x 5/16" Wall Cuttershaft
- 1-5/16" Bore Greaseable, Self-aligning Cuttershaft Bearings
- 53 HP Motor
- Belt Drive From Motor To Cuttershaft with Automatic Spring Tension
- 6" Adjustable Rear Roller
- 1/2" to 6" Cutting Height
- Available in Fine or Coarse-Cut
- Front and Rear Safety Deflectors
- Automatic Cut-Off Switches
- Wing Cylinder Capable of 45 degrees Down & 90° Up

FRONT MOWER SPECS

- 96" Cutting Width
- 10-Gauge Unitized Cutter Housing
- 5/16" Side Plates
- 4-1/2" x 5/16" Wall Cuttershaft
- 1-5/16" Bore Greaseable, Self-aligning Cuttershaft Bearings
- 60 HP Gearbox
- 6" Adjustable Rear Roller
- 1/2" to 6" Cutting Height
- Available in Fine or Coarse-Cut
- Front and Rear Safety Deflectors
- Belt Drive From Gearbox To Cuttershaft with Automatic Spring Tension

PRODUCT ORDER CODE	DESCRIPTION	APPRX. WEIGHT		LIST PRICE
VERSA PRO FLAIL BASE UNIT *(One Choice Required)*				
04903031	21'8" Versa Pro Flail, Fine-Cut Knives, Rev Rot, NH TV140	3324		56,929
04903026	21'8" Versa Pro Flail, Coarse-Cut Knives, NH TV140	3263		57,577
04903027	21'8" Versa Pro Flail, Fine-Cut w/Ring Knives, NH TV140	3278		57,816
04903028	21'8" Versa Pro Flail, Extreme Service Knives, NH TV140	3269		57,738
04903030	21'8" Versa Pro Flail, Fine-Cut Knives, NH TV140	3324		56,929
OPTIONS				
803350	Additional Operators and Parts Manuals			45
02963046	Mounting Labor & Oil			4,687
02791800VP	Special Mower Paint (02791800)			1,397
00889899VP	Additional 12 Month Warranty (00889899)			3,521

74" & 88" RIGHT-HAND INTERSTATER

74" & 88" Professional Flail Mowers

STANDARD SPECIFICATIONS

- 62", 74", or 88" Cutting Widths
- Full-Length Welded Tubular Frame with Transport Lock
- 19-Gallon Reservoir with 12 Micron Filtration
- Piston Pump Rated @ 24 GPM @ 3800 PSI
- 2-Spool Valve with Detent Position
- Automatic Cut-Off Switch
- Lift Cylinder Capable of 14" Vertical Lift
- Tilt Cylinder Capable of 45° Down & 90° Up
- 10-Gauge Unitized Cutter Housing
- 1/2" Inboard & 5/16" Outboard Side Plates
- Replaceable Skid Shoes
- 4-1/2" x 5/16" Wall Cuttershaft
- 1-5/16" Bore Greaseable, Self-aligning Cuttershaft Bearings
- 53 HP Piston Motor
- Belt Drive From Motor To Cuttershaft with Automatic Spring Tension
- 6" Adjustable Rear Roller
- 1/2" to 6" Cutting Height
- Available in Fine or Coarse-Cut
- Front and Rear Safety Deflectors
- Standard (1) year limited parts and labor warranty

PRODUCT ORDER CODE	DESCRIPTION	APPRX. WEIGHT		LIST PRICE
RIGHT HAND INTERSTATER BASE UNIT				
988002	62" Fine-Cut			18,599
988001	62" Coarse-Cut (3 oz. Knives)			18,572
988004	62" Extreme Service (4 oz. Knives)			18,703
988005	74" Coarse-Cut (3 oz. Knives)	1200		19,375
988008	74" Extreme Service (4 oz. Knives)	1205		19,507
988061	74" Fine-Cut, Rock and Trash Knives	1208		19,729
988009	88" Coarse-Cut (3 oz. Knives)	1250		19,589
988012	88" Extreme Service (4 oz. Knives)	1255		19,716
OPTIONS				
803213	Additional Operators and Parts Manual			45
107532	62" Right-Clipped Foot Guard	32		385
107519	74" Right-Clipped Foot Guard	37		332
107524	88" Right-Clipped Foot Guard	42		398
801022	Mounting Labor & Oil, CAB Tractor			4,546
02791800IR	Special Mower Paint (02791800)			835
02968967	Special Tractor Paint			5,802
00889899I1	Additional 12 Month Warranty (00889899)			1,454

RIGHT-HAND INTERSTATER

MOUNT KIT OPTIONS

TRACTOR DESCRIPTION	MOUNT KIT	REAR OFFSET	MAXIMUM TIRE SIZE 2WD Front	4WD Front	Rear	LIST PRICE
Case IH						
Case-IH JX1060C/1070C/1075C Cab/2wd (RH Only/Aux Pump)	108777 704548	88"OR 8.5" 96"OR 12.5"	9.5L-15		16.9-30	$7,377
Case-IH JX1060C/1070C/1075C Cab/2wd (RH Only/Tractor Hyd)	108777 02980173	88"OR 8.5" 96"OR 12.5"	9.5L-15		16.9-30	$6,767
Case-IH JX1060C/1070C/1075C Cab/4wd (RH Only/Aux Pump)*	02984334 02984335	88"OR 14.5" 96"OR 12.5"		11.2-20	14.9-28	$7,377
Case-IH JX1060C/1070C/1075C ROPS/2wd (RH Only/Aux Pump)	108775 704546	88"OR 8.5" 96"OR 12.5"	11L-15		16.9-30	$7,377
Case-IH JX1060C/1070C/1075C ROPS/2wd (RH Only/Tractor Hyd)	108775 02980457	88"OR 8.5" 96"OR 12.5"	11L-15		16.9-30	$6,767
Case-IH JX1080U/1090U/1100U Cab/2&4wd (RH Only/Aux Pump)*	02983494 02983537	88"OR 8.5" 96" Ctr	11L-15	11.2-24	16.9-34	$7,377
Case-IH JX1080U/1090U/1100U ROPS/2wd (RH Only/Aux Pump)	02980206 02983546	88"OR 8.5" 96" Ctr	10.00-16		16.9-34	$7,377
Case-IH MXU100/110 Cab/2&4wd (RH Only/Aux Pump)*	02981068 02981075	88"OR 8.5" 96" Ctr		12.4-24	18.4-30	$8,575
Case-IH MXU100/110 ROPS/2&4wd (RH Only/Aux Pump)*	02981068 02981072	88"OR 8.5" 96" Ctr		12.4-24	18.4-30	$8,575
Case-IH MXU115/125/130/135 Cab/2&4wd (RH Only/Aux Pump)	02982986 02983000	88"OR 8.5" 96" Ctr		12.4-24	18.4-30	$8,575
John Deere						
JD 5085/5095/5105M Cab/4wd (RH Only/Aux Pump)	02991095 02991097	88"OR 8.5" 96" Ctr		11.2-24	16.9-30	$8,575
JD 5225/5325 Cab/2wd (RH Only/Aux Pump)	02983231 02983224	88"OR 8.5" 96" Ctr	6.50-16		13.6-28	$7,377
JD 5225/5325 Cab/4wd (RH Only/Aux Pump)	02983848 02983858	88"OR 8.5" 96" Ctr		11.2-24	16.9-30	$7,377
JD 5425/5525 Cab/2&4wd (RH Only/Aux Pump)*	02978138 02983640	88"OR 8.5" 96" Ctr		11.2-24	16.9-30	$7,377
JD 5425/5525 Cab/2&4wd (RH Only/Loader Hyd)*	02978138 02984124	88"OR 8.5" 96" Ctr		11.2-24	16.9-30	$6,767
JD 6215/6415 Cab/2&4wd (RH Only/Aux Pump)	02978882 02978908	88"OR 8.5" 96" Ctr		12.4-24	18.4-34	$8,575
JD 6215/6415 Cab/2&4wd (RH Only/Tractor Hyd) (2nd Remote Req'd)	02978882 02978879	88"OR 8.5" 96" Ctr		12.4-24	18.4-34	$7,966
JD 6120/6220/6320/6420 Cab/2&4wd (RH Only/Aux Pump)	02978882 02978908	88"OR 8.5" 96" Ctr		12.4-24	18.4-30	$8,575
JD 6120/6220/6320/6420 Cab/2&4wd (RH Only/Tractor Hyd)	02978882 02978879	88"OR 8.5" 96" Ctr		12.4-24	18.4-30	$7,966
McCormick						
McCormick CX75/85/95/105 Tier II Cab/2wd (RH Only/Trac Hyd)	02982467 02982079	88"OR 8.5" 96" Ctr	11L-16		16.9-30	$7,377
McCormick CX75/85/95/105 Tier II Cab/4wd (RH Only/Trac Hyd)*	02982218 02982079	88"OR 8.5" 96" Ctr		11.2-24	16.9-30	$7,377
Massey Ferguson						
MF 5435/5445/5455 Cab/2wd (RH Only/Tractor Hyd)	02981881 02981312	88"OR 8.5" 96" Ctr	7.50-16		16.9-28	$6,767

**Include clipped foot guard for 4wd*
Note that BOTH part numbers listed must be included with your order.

Prices Effective February 11, 2011

ALAMO INDUSTRIAL
(800) 882-5762

RIGHT-HAND INTERSTATER

MOUNT KIT OPTIONS

TRACTOR DESCRIPTION	MOUNT KIT	REAR OFFSET	MAXIMUM TIRE SIZE			LIST PRICE
			2WD Front	4WD Front	Rear	
New Holland						
NH T4020/4030 "Deluxe" Cab/2wd (RH Only w/Aux Pump)	02987359 02986821	88"OR 8.5" 96"OR 12.5"	11L-15	N/A	16.9-30	$8,575
NH T4020/4030 "Deluxe" Cab/2wd (RH Only w/Tractor Hyd)	02987050 02986821	88"OR 8.5" 96"OR 12.5"	11L-15	N/A	16.9-30	$7,966
NH T4020/4030 "Deluxe" Cab/2wd (RH Only w/Loader Hyd)	02987050 02990316	88"OR 8.5" 96"OR 12.5"	11L-15	N/A	16.9-30	$7,966
NH T4020/4030 "Deluxe" Cab/4wd (RH Only w/Aux Pump)*	02987887 02987922	88"OR 14.5" 96"OR 12.5"	N/A	13.6-16	16.9-24	$8,575
NH T4020/4030 "Standard" ROPS/2wd (RH Only w/Aux Pump)	02987048 02987586	88"OR 8.5" 96"OR 12.5"	7.50-16	N/A	16.9-30	$8,575
NH T4040/4050 "Deluxe" Cab/2wd (RH Only w/Aux Pump)	02986812 02986821	88"OR 8.5" 96"OR 12.5"	8.5L-15	N/A	16.9-30	$8,575
NH T4040/4050 "Deluxe" Cab/4wd (RH Only w/Aux Pump)*	02990821 02990822	88"OR 14.5" 96"OR 12.5"	N/A	11.2-20	16.9-30	$8,575
NH T5040/5050/5060/5070 Cab/2&4wd (RH Only w/Aux Pump)*	02983494 02986605	88"OR 8.5" 96" Ctr	10.00-16	11.2-24	18.4-30	$8,575
NH T5040/5050/5060/5070 Cab/2&4wd (RH Only w/Tractor Hyd)*	02983494 02989472	88"OR 8.5" 96" Ctr	10.00-16	11.2-24	18.4-30	$7,966
NH T5040/5050/5060/5070 ROPS/2wd (RH Only w/Aux Pump)	02980206 02988018	88"OR 8.5" 96" Ctr	10.00-16	N/A	18.4-30	$8,575
NH T6030/6050/6070 Cab/2&4wd (RH Only w/Aux Pump)*	02982986 02986187	88"OR 8.5" 96" Ctr	11.00-16	14.9-24	18.4-34	$8,575
NH T6030/6050/6070 Cab/2&4wd (RH Only w/Tractor Hyd)*	02982986 02989446	88"OR 8.5" 96" Ctr	11.00-16	14.9-24	18.4-34	$7,966
NH T6030/6050/6070 ROPS/2wd (RH Only w/Aux Pump)	02982986 02989451	88"OR 8.5" 96" Ctr	11.00-16	N/A	18.4-30	$8,575
NH TB100/110 ROPS/2&4wd (RH 1st w/Aux Pump)*	02980834 02980255	88"OR 8.5" 96" Ctr		12.4-24	18.4-30	$8,053
NH TL80/90/100 Cab/2wd (RH Only w/Aux Pump)	02980206 02983635	88"OR 8.5" 96" Ctr	10.00-16		16.9-34	$7,377
NH TL80A/90A/100A Cab/2&4wd (RH Only/Aux Pump)*	02983494 02983537	88"OR 8.5" 96" Ctr		11.2-24	16.9-34	$7,377
NH TL80A/90A/100A ROPS/2wd (RH Only/Aux Pump)	02980206 02983546	88"OR 8.5" 96" Ctr	10.00-16		16.9-34	$7,377

**Include clipped foot guard for 4wd*
Note that BOTH part numbers listed must be included with your order.

RIGHT-HAND INTERSTATER

MOUNT KIT OPTIONS

TRACTOR DESCRIPTION	MOUNT KIT	REAR OFFSET	MAXIMUM TIRE SIZE 2WD Front	4WD Front	Rear	LIST PRICE
New Holland *(Continued)*						
NH TN55D/65D/70D/75D Cab/2wd (RH Only/Aux Pump)	108777 704548	88"OR 8.5" 96"OR 12.5"	9.5L-15		16.9-30	$7,377
NH TN55D/65D/70D/75D Cab/2wd (RH Only/Tractor Hyd)	108777 02980173	88"OR 8.5" 96"OR 12.5"	9.5L-15		16.9-30	$6,767
NH TN55/65/70/75 ROPS/2wd (RH Only/Aux Pump)	108775 704546	88"OR 8.5" 96"OR 12.5"	11L-15		16.9-30	$7,377
NH TN55/65/70/75 ROPS/2wd (RH Only/Tractor Hyd)	108775 02980457	88"OR 8.5" 96"OR 12.5"	11L-15		16.9-30	$6,767
NH TN60DA/70DA/75DA Cab/2wd (RH Only/Aux Pump)	108777 704548	88"OR 8.5" 96"OR 12.5"	9.5L-15		16.9-30	$7,377
NH TN60DA/70DA/75DA Cab/2wd (RH Only/Tractor Hyd)	108777 02980173	88"OR 8.5" 96"OR 12.5"	9.5L-15		16.9-30	$6,767
NH TN60DA/70DA/75DA Cab/4wd (RH Only/Aux Pump)*	02984334 02984335	88"OR14.5" 96"OR12.5"		11.2-20	14.9-28	$7,377
NH TN60A/70A/75A ROPS/2wd (RH Only/Aux Pump)	108775 704546	88"OR 8.5" 96"OR 12.5"	11L-15		16.9-30	$7,377
NH TN60A/70A/75A ROPS/2wd (RH Only/Tractor Hyd)	108775 02980457	88"OR 8.5" 96"OR 12.5"	11L-15		16.9-30	$6,767
NH TS100A/110A Cab/2&4wd (RH Only/Aux Pump)*	02981068 02981075	88"OR 8.5" 96" Ctr		12.4-24	18.4-30	$8,575
NH TS100A/110A ROPS/2&4wd (RH Only/Aux Pump)*	02981068 02981072	88"OR 8.5" 96" Ctr		12.4-24	18.4-30	$8,575
NH TS115A/125A/130A/135A Cab/2&4wd (RH Only/Aux Pump)	02982986 02983000	88"OR 8.5" 96" Ctr		12.4-24	18.4-30	$8,575

**Include clipped foot guard for 4wd*
Note that BOTH part numbers listed must be included with your order.

INTERSTATER DUAL-WING

Flail Mower

BASE UNIT SPECIFICATIONS

- 18'5", or 20'9" Overall Cutting Widths
- Full-Length Welded Tubular Frame with Transport Lock
- 19-Gallon Reservoir with 12 Micron Filtration
- Tandem Piston Pumps Rated @ 48 GPM @ 3800 PSI
- 4-Spool Valve with Detent Position
- Standard (1) year limited parts and labor warranty

WING MOWER SPECIFICATIONS

- 62", 74", or 88" Cutting Widths
- 1/2" Inboard & 5/16" Outboard Side Plates
- Replaceable Skid Shoes
- 4-1/2" x 5/16" Wall Cuttershaft
- 1-5/16" Bore Greaseable, Self-aligning Cuttershaft Bearings
- 53 HP Piston Motor
- Belt Drive From Motor To Cuttershaft with Automatic Spring Tension
- 6" Adjustable Rear Roller
- 1/2" to 6" Cutting Height
- Available in Fine or Coarse-Cut
- Front and Rear Safety Deflectors
- Automatic Cut-Off Switch
- Lift Cylinder Capable of 14" Vertical Lift
- Tilt Cylinder Capable of 45° Down & 90° Up
- 10-Gauge Unitized Cutter Housing

REAR MOWER SPECIFICATIONS

- 88" or 96" Cutting Width (Depending on trctr mnt. kit)
- 10-Gauge Unitized Cutter Housing
- 5/16" Side Plates
- CAT I or CAT II Three-Point Hitch
- 4-1/2" x 5/16" Wall Cuttershaft
- 1-5/16" Bore Greaseable, Self-aligning Cuttershaft Bearings
- 60 HP Gearbox
- 6" Adjustable Rear Roller
- 1/2" to 6" Cutting Height
- Available in Fine or Coarse-Cut
- Torque Limiter Clutch
- Front and Rear Safety Deflectors
- CAT 4 Driveline
- Belt Drive From Gearbox To Cuttershaft with Automatic Spring Tension

PRODUCT ORDER CODE	DESCRIPTION	APPRX. WEIGHT		LIST PRICE
INTERSTATER BASE UNIT *(One Choice Required)*				
988030	18'5" Fine-Cut	4560		41,144
988029	18'5" Coarse-Cut (3 oz. Knives)	4570		41,090
988032	18'5" Extreme Service (4 oz. Knives)	4574		41,393
988034	20'9" Fine-Cut	4611		41,791
988033	20'9" Coarse-Cut (3 oz. Knives)	4620		41,738
988036	20'9" Extreme Service (4 oz. Knives)	4624		42,039
MOUNT KIT *(One Choice Required)* *See Mount Kit Page for Descriptions & Part Numbers*				
OPTIONS				
803213	Additional Operators and Parts Manual			45
107520	74" Left-Clipped Foot Guard	37		306
107519	74" Right-Clipped Foot Guard	37		332
107525	88" Left-Clipped Foot Guard	42		398
107524	88" Right-Clipped Foot Guard	42		398
02972480	Left-Wing Remote Positioning System	65		2,695
803399	Mounting Labor & Oil			7,390
02791800DW	Special Mower Paint (02791800)			1,296
02968967	Special Tractor Paint			5,802
00889899DW	Additional 12 Month Warranty (00889899)			2,450

DUAL-WING INTERSTATER

MOUNT KIT OPTIONS

TRACTOR DESCRIPTION	MOUNT KIT	REAR OFFSET	MAXIMUM TIRE SIZE 2WD Front	4WD Front	Rear	LIST PRICE
Case IH						
Case-IH JX1080U/1090U/1100U Cab/2&4wd* (27 gal repl fuel tank included)	02980423 02983400	96" Ctr	10.00-16	11.2-24	18.4-30	12,027
Case-IH JX1080U/1090U/1100U ROPS/2wd (27 gal repl fuel tank included)	02980423 02983273	96" Ctr	10.00-16		18.4-30	12,027
Case-IH MXU100/110 Cab/2&4wd* (51 gal repl fuel tank & exhaust pipe included)	02980935 02980823	96" Ctr		12.4-24	18.4-30	13,325
Case-IH MXU100/110 ROPS/2&4wd* (51 gal repl fuel tank & exhaust pipe included)	02980935 02980919	96" Ctr		12.4-24	18.4-30	13,325
Case-IH MXU115/125/130/135 Cab/2&4wd (51 gal repl fuel tank & exhaust pipe included)	02981078 02981009	96" Ctr		12.4-24	18.4-30	13,325
Case-IH MXU115/125/130/135 Cab/2&4wd (Tractor Hyd) (51 gal repl fuel tank & exhaust pipe included)	02981078 02981087	96" Ctr		12.4-24	18.4-30	12,675
Case-IH MXU115/125/130/135 ROPS/2&4wd (51 gal repl fuel tank & exhaust pipe included)	02981078 02983720	96" Ctr		12.4-24	18.4-30	13,325
John Deere						
JD 5425/5525 Cab/2&4wd*	02984649 02984646	96" Ctr		11.2-24	16.9-30	11,101
JD 5425/5525 ROPS/2wd (Straddle Platform)	02983067 02982994	96" Ctr	7.50-16		16.9-30	11,101
JD 6215/6415 Cab/2&4wd (29 gal replacement fuel tank included)	108776 02979604	96" Ctr		12.4-24	18.4-30	13,325
JD 6215/6415 ROPS/2&4wd (29 gal replacement fuel tank included)	108776 02979815	96" Ctr		12.4-24	18.4-30	13,325
JD 6120/6220/6320/6420 Cab/2&4wd (29 gal replacement fuel tank included)	108776 02979604	96" Ctr		12.4-24	18.4-30	13,325
JD 6120/6220/6320/6420 ROPS/2&4wd (29 gal replacement fuel tank included)	108776 02979815	96" Ctr		12.4-24	18.4-30	13,325
JD 6615/6715 ROPS/2wd	02981706 02983950	96" OL 5"	10.00-16		18.4-38	11,101

**Include clipped foot guard for 4wd*

Note that ALL part numbers listed must be included with your order.

DUAL-WING INTERSTATER

MOUNT KIT OPTIONS

TRACTOR DESCRIPTION	MOUNT KIT	REAR OFFSET	MAXIMUM TIRE SIZE			LIST PRICE
			2WD Front	4WD Front	Rear	
New Holland						
NH T5040/5050/5060/5070 Cab/2&4wd* (27 gal repl fuel tank included)	02980423 02986612	96" Ctr	10.00-16	11.2-24	18.4-30	13325
NH T5040/5050/5060/5070 Rops/2wd (27 gal repl fuel tank included)	02980423 02987792	96" Ctr	10.00-16	N/A	18.4-30	13325
NH T6010/6020/6040/6060 Cab/2wd (51 gal repl fuel tank & exhaust pipe included)	02980935 02986403	96" Ctr	10.00-16	N/A	18.4-30	13325
NH T6010/6020/6040/6060 Cab/4wd* (51 gal repl fuel tank & exhaust pipe included)	02987990 02987818	96" Ctr	N/A	14.9-24	18.4-34	13325
NH T6030/6050/6070 Cab/2wd (51 gal repl fuel tank & exhaust pipe included)	02981078 02986365	96" Ctr	11.00-16	N/A	18.4-30	13325
NH TB100/110 Rops/2&4wd*	02980834 02980178	96" Ctr		12.4-24	18.4-30	11101.068
NH TL80/90/100 Cab/2wd (27 gal repl fuel tank included)	02980423 02981017	96" Ctr	10.00-16		18.4-30	12,027
NH TL80/90/100 ROPS/2wd (27 gal repl fuel tank included)	02980423 02980333	96" Ctr	10.00-16		18.4-30	12,027
NH TL80A/90A/100A Cab/2&4wd* (27 gal repl fuel tank included)	02980423 02983400	96" Ctr	10.00-16	11.2-24	18.4-30	12,027
NH TL80A/90A/100A ROPS/2wd (27 gal repl fuel tank included)	02980423 02983273	96" Ctr	10.00-16		18.4-30	12,027
NH TS100A/110A Cab/2&4wd* (51 gal repl fuel tank & exhaust pipe included)	02980935 02980823	96" Ctr		12.4-24	18.4-30	13,325
NH TS100A/110A ROPS/2&4wd* (51 gal repl fuel tank & exhaust pipe included)	02980935 02980919	96" Ctr		12.4-24	18.4-30	13,325
NH TS115A/125A/130A/135A Cab/2&4wd (51 gal repl fuel tank & exhaust pipe included)	02981078 02981009	96" Ctr		12.4-24	18.4-30	13,325
NH TS115A/125A/130A/135A Cab/2&4wd (Tractor Hyd) (51 gal repl fuel tank & exhaust pipe included) (Tractor must include four remotes)	02981078 02981087	96" Ctr		12.4-24	18.4-30	12,675
NH TS115A/125A/130A/135A ROPS/2&4wd (51 gal repl fuel tank & exhaust pipe included)	02981078 02983720	96" Ctr		12.4-24	18.4-30	13,325
NH TM120/130/140/155 Cab/2wd (new battery box incl) (Include RH clipped foot guard)	02978837 02979781	96' OL 5"	11.00-16		18.4-34	12,027

**Include clipped foot guard for 4wd*
Note that ALL part numbers listed must be included with your order.

88" REAR INTERSTATER

Flail Mower

STANDARD SPECIFICATIONS

- 88" Cutting Width
- 10-Gauge Unitized Cutter Housing
- 5/16" Side Plates
- CAT I or CAT II Three-Point Hitch
- 4-1/2" x 5/16" Wall Cuttershaft
- 1-5/16" Bore Greaseable, Self-aligning Cuttershaft Bearings
- 60 HP Gearbox
- 6" Adjustable Rear Roller
- 1/2" to 6" Cutting Height
- Available in Fine or Coarse-Cut
- Torque Limiter Clutch
- Front and Rear Safety Deflectors
- CAT 4 Driveline
- Belt Drive From Gearbox to Cuttershaft with Automatic Spring Tension
- Standard (1) year limited parts and labor warranty

PRODUCT ORDER CODE	DESCRIPTION	APPRX. WEIGHT		LIST PRICE
88" REAR INTERSTATER BASE UNIT *(One Choice Required)*				
SHD88CTRFC	88" SHD, Center Mount (Fine Cut Knives)	1035		6,499
SHD88CTRCC	88" SHD, Center Mount (Course Cut Knives)	1035		6,499
SHD88CTRES	88" SHD, Center Mount (Extreme Service Knives)	1035		6,722
SHD88080FC	88" SHD, Offset (8.5" Right) (Fine Cut Knives)	1035		6,499
SHD88080CC	88" SHD, Offset (8.5" Right) (Course Cut Knives)	1035		6,499
SHD88080ES	88" SHD, Offset (8.5" Right) (Extreme Service Knives)	1035		6,722
SHD88145FC	88" SHD, Offset (14.5" Right) (Fine Cut Knives)	1035		6,499
SHD88145CC	88" SHD, Offset (14.5" Right) (Course Cut Knives)	1035		6,499
SHD88145ES	88" SHD, Offset (14.5" Right) (Extreme Service Knives)	1035		6,722
SHD88205CC	88" SHD, Offset (20.5" Right) (Course Cut Knives)	1035		6,499
SHD88265CC	88" SHD, Offset (26.5" Right) (Course Cut Knives)	1035		6,499
OPTIONS				
803211	Additional Operators and Parts Manuals			45
701150	Lift Chains	7		92
801002	Special Mower Paint (Rear Unit Only)			613
00889899I2	Additional 12 Month Warranty (00889899)			1,794

96" REAR INTERSTATER

Flail Mower

STANDARD SPECIFICATIONS

- 96" Cutting Width
- 10-Gauge Unitized Cutter Housing
- 5/16" Side Plates
- CAT I or CAT II Three-Point Hitch
- 4-1/2" x 5/16" Wall Cuttershaft
- 1-5/16" Bore Greaseable, Self-aligning Cuttershaft Bearings
- 60 HP Gearbox
- 6" Adjustable Rear Roller
- 1/2" to 6" Cutting Height
- Available in Fine or Coarse-Cut
- Torque Limiter Clutch
- Front and Rear Safety Deflectors
- CAT 4 Driveline
- Belt Drive From Gearbox to Cuttershaft with Automatic Spring Tension
- Standard (1) year limited parts and labor warranty

PRODUCT ORDER CODE	DESCRIPTION	APPRX. WEIGHT		LIST PRICE
96" REAR INTERSTATER BASE UNIT *(One Choice Required)*				
SHD96CTRFC	96" SHD, Center Mount (Fine Cut)	1170		7,237
SHD96CTRCC	96" SHD, Center Mount (Course Cut 3 oz. knives)	1170		7,237
SHD96CTRES	96" SHD, Center Mount (Extreme Service 4 oz. knives)	1170		7,481
SHD96125FC	96" SHD, Offset 12.5" Right (Fine Cut) Includes 704525, 701457, 703547	1170		7,237
SHD96125CC	96" SHD, Offset 12.5" Right (Course Cut 3 oz. knives) Includes 704382, 701457, 703547	1170		7,237
SHD96125ES	96" SHD, Offset 12.5" Right (Extreme Service 4 oz. knives) Includes 704262, 701457, 703547	1170		7,481
SHD96185FC	96" SHD, Offset 18.5" Right (Fine Cut) Includes 02981445, 701455, 703547	1170		7,237
SHD96185CC	96" SHD, Offset 18.5" Right (Course Cut 3 oz. knives) Includes 704018, 701455, 703547	1170		7,237
SHD96185ES	96" SHD, Offset 18.5" Right (Extreme Service 4 oz. knives) Includes 704280, 701455, 703547	1170		7,481
SHD96245CC	96" SHD, Offset 24.5" Right (Course Cut 3 oz. knives) Includes 704063, 700554, 703547	1170		7,237
SHD96245ES	96" SHD, Offset 24.5" Right (Extreme Service 4 oz. knives) Includes 704260, 700554, 703547	1170		7,481
SHD96305CC	96" SHD, Offset 30.5" Right (Course Cut 3 oz. knives) Includes 703970, 703757, 703547	1170		7,237
SHD96305ES	96" SHD, Offset 30.5" Right (Extreme Service 4 oz. knives) Includes 704278, 703757, 703547	1170		7,481
SHD96CTRCCCB	96" SHD, Center Mount, Caster Brackets (Course Cut 3 oz. knives)	1249		7,725
SHD96CTRESCB	96" SHD, Center Mount, Caster Brackets (Extreme Service 4 oz. knives)	1249		7,969
SHD96125CCCB	96" SHD, Offset 12.5" Right, Caster Brackets (Course Cut 3 oz. knives) Includes 704080, 701457, 703547	1249		7,726
SHD96185ESCB	96" SHD, Offset 18.5" Right, Caster Brackets(Extreme Service 4 oz. knives) Includes 704384, 701455, 703547	1249		7,970
SHD96245CCCB	96" SHD, Offset 24.5" Right, Caster Brackets (Course Cut 3 oz. knives) Includes 704340, 700554, 703547	1249		7,726
SHD96245ESCB	96" SHD, Offset 24.5" Right, Caster Brackets (Extreme Service 4 oz. knives) Includes 02980775, 700554, 703547	1249		7,970
SHD96305CCCB	96" SHD, Offset 30.5" Right, Caster Brackets (Course Cut 3 oz. knives) Includes 704267, 703757, 703547	1249		7,726
SHD96305ESCB	96" SHD, Offset 30.5" Right, Caster Brackets (Extreme Service 4 oz. knives) Includes 704395, 703757, 703547	1249		7,970

96" REAR INTERSTATER

Flail Mower

PRODUCT ORDER CODE	DESCRIPTION	APPRX. WEIGHT		LIST PRICE
	CASTERS *(One Choice Required)*			
702193	360° Laminated Caster Wheel with Roller	154		1,494
	OPTIONS			
803211	Additional Operators and Parts Manuals			45
701150	Lift Chains	7		92
801002	Special Mower Paint (Rear Unit Only)			613
00889899I2	Additional 12 Month Warranty (00889899)			1,794

"Subject to Availability- Limited Quantities"

John Deere 6430 "MID-SPEC" CAB TRACTOR

STANDARD SPECIFICATIONS

- 99 PTO hp @ 2,300 rpm
- 120 Engine hp @ 2,300 rpm
- 4 Cyld. John Deere PowerTech E
- 276 cu. in. (4.53 L) Displacement, Tier 3 Emissions Level
- Underhood Muffler with Vertical Exhaust
- Wet Multi-Disk Clutch
- 21.1 gpm Pump Capacity at 2,300 rpm
- Single Selective Control Valve
- Independent 540/1000 rpm PTO
- Single 830 CCA Battery
- 90 Amp Alternator
- Category II 3-Point Hitch
- Flanged Rear Axle w/8 Position Steel Wheels
- 43.6 Gallon Fuel Tank Capacity
- See foot notes for seat configuration.

Part Number	Model	Transmission	Tire Sizes	List Price
02990016	JD 6430 "Mid-Spec" Cab/4wd*	PowrQuad PLUS 16F/16R w/LH Power Reverser (19 mph)	13.6R24/18.4R34	80,612
02986360	JD 6430 "Mid-Spec" Cab/4wd**	SyncroPlus 16F/16R w/LH Power Reverser (19 mph)	13.6R24/18.4R34	76,066

* Super Comfort Seat with Air Suspension

** Super Comfort Seat with Mechanical Suspension

"Subject to Availability - Limited Quantities"

John Deere 7130 "MID-SPEC" CAB TRACTOR

STANDARD SPECIFICATIONS

- 101 PTO hp @ 2,300 rpm
- 125 Engine hp @ 2,300 rpm
- 4 Cyld. John Deere PowerTech E
- 276 cu. in. (4.53 L) Displacement, Tier 3 Emissions Level
- Turbocharged
- Underhood Muffler with Vertical Exhaust
- Wet Multi-Disk Clutch
- 21.1 gpm Pump Capacity at 2,300 rpm
- Single Selective Control Valves (SCV's)
- 540/1000 RPM, Independent Rear PTO
- Single 1,230 CCA Battery
- 90 Amp Alternator
- Category II 3-Point Hitch
- Flanged Rear Axle w/8 Position Steel Wheels
- 55 Gallon Fuel Tank Capacity
- Super Comfort Seat with Air Suspension

Part Number	Model	Transmission	Tire Sizes	List Price
02989250	JD 7130 "Mid-Spec" Cab/4wd	PowrQuad PLUS 16F/16R w/LH Power Reverser (19 mph)	13.6R28/18.4R38	86,325

John Deere Tractors for "Turn-key" Packages

Part #	Model Description	Transmission	Tire Sizes	Engine HP Rating	List Pricing
02992054	**2013 John Deere 5083E Cab/4wd**	**12F x 12R w/ LH Power Reverser**	**12.4-24/18.4-30**	**83**	**52,367**
02991719	**2013 John Deere 5085M Cab/4wd**	**16F x 16R w/ LH Power Reverser**	**12.4-24/18.4-30**	**85**	**70,530**
TBD	2WD Downgrade	16F x 16R w/ LH Power Reverser	11L-15/18.4-30		(6,132)
TBD	Rops 4WD Downgrade	16F x 16R w/ LH Power Reverser	12.4-24/18.4-30		(9,296)
TBD	Rops 2WD Downgrade	16F x 16R w/ LH Power Reverser	11L-15/18.4-30		(15,428)
02992033	**2013 John Deere 6105M Cab/4wd**	**16F x 16R w/ LH Power Reverser**	**14.9-24/18.4-34**	**105**	**92,768**
TBD	Nokian TRI2 Turf Tires Upgrade	16F x 16R w/ LH Power Reverser	400/80-R24/480-80R34		1,651
TBD	2WD Downgrade	16F x 16R w/ LH Power Reverser	10.00-16/18.4R34		(8,151)
TBD	Rops 4WD Downgrade	16F x 16R w/ LH Power Reverser	14.9-24/18.4-34		(8,970)
TBD	Rops 2WD Downgrade	16F x 16R w/ LH Power Reverser	11.00L15/18.4R34		(17,545)
02992034	**2013 John Deere 6115M Cab/4wd**	**16F x 16R w/ LH Power Reverser**	**14.9-24/18.4-34**	**115**	**97,163**
TBD	Nokian TRI2 Turf Tires Upgrade	16F x 16R w/ LH Power Reverser	400/80-R24/480-80R34		1,651
TBD	2WD Downgrade	16F x 16R w/ LH Power Reverser	10.00-16/18.4R34		(8,151)
TBD	Rops 4WD Downgrade	16F x 16R w/ LH Power Reverser	14.9-24/18.4-34		(8,970)
TBD	Rops 2WD Downgrade	16F x 16R w/ LH Power Reverser	11.00L15/18.4R34		(17,545)
02992035	**2013 John Deere 6125M Cab/4wd**	**16F x 16R w/ LH Power Reverser**	**13.6-28/18.11-38**	**125**	**105,677**
TBD	Nokian TRI2 Turf Tires Upgrade	16F x 16R w/ LH Power Reverser	440/80-R24/480-80R38		2,326
TBD	2WD Downgrade	16F x 16R w/ LH Power Reverser	10.00-16/18.4R34		(8,135)
TBD	Rops 4WD Downgrade	16F x 16R w/ LH Power Reverser	13.6-28/18.11-38		(10,323)
TBD	Rops 2WD Downgrade	16F x 16R w/ LH Power Reverser	11.00L15/18.4R34		(18,883)
Tractors in Bold Print are "Stock Units".					

*** Previous Year Production Model - Limited to Current Stock Availability**
Numbers in (****) are deducts. Subtract amount from stock tractor pricing.

John Deere 5083E Equipment for Base Machine

ENGINE:
83 (61 kW) 97/68/EC Engine Horsepower @ 2400 RPM*
69 (51 kW) PTO Horsepower @ 2400 RPM*
4 Cylinder Turbocharged
John Deere PowerTech
Diesel Engine
276 C.I.D. (4.5 L)
Oil Cooler
Dry Type Air Cleaner with
Safety Element
Underhood Muffler with
Vertical Exhaust Stack
Anti-Freeze
Water Separator Bowl
Hand and Foot Throttle
Key Engine Shut Off
Fan Finger Guard
Fuel Cooler

TRANSMISSION:
12F/12R PowrReverser Transmission
LH Electrohydraulic (EH)
Directional Reverser
Integrated Park Position
Differential Lock
Neutral Start Safety Switch
Wet Traction Clutch

FRONT AXLE AND TIRES:
Mechanical Front Wheel Drive
(4 Wheel Drive) Front Axle
Mechanical MFWD Engagement
Planetary Final Drives
8-Position Steel Front Wheels
with Two 11.2-24 6PR (R1)

REAR AXLE AND TIRES:
Flanged Rear Axle
Planetary Final Drives
8-Position Steel Rear Wheels
with Two 16.9-30 8PR (R1)

STEERING AND BRAKES:
Hydrostatic Power Steering
Hydraulic Wet Disk Brakes
Self-Equalizing and
Self-Adjusting

HYDRAULICS:
Open Center Hydraulic System
Tandem Gear Pump 22.5 GPM
(85.1 LPM) Maximum Total Flow
Steering Pump 6.6 GPM (24.9 LPM)
Implement Pump 15.9 GPM (60.1 LPM)
Hydraulic Oil Cooler
Dual Rear SCV Control Valve

POWER TAKE-OFF SHAFT:
Independent "Live" 540 RPM /540E
Rear PTO Shaft
Electro-hydraulic PTO engagement
@ 2400 Rated Engine RPM
Economy PTO setting for 540 PTO RPM
@ 1716 Engine RPM

POWER TAKE-OFF SHAFT:
Wet PTO Clutch
Operator Presence Safety
Warning - PTO
Safety Start Switch
Flip Up PTO Shield

ROCKSHAFT, HITCH AND DRAWBAR:
Telescopic Draft Links with Category II Balls
Adjustable Sway Chains
Adjustable Straight Drawbar
Top Link Draft Sensing

INSTRUMENTATION:
Electric Fuel Gauge
Tachometer/Hour Meter
Oil Pressure Indicator Light
Coolant Temperature Gauge
Alternator Indicator Light
Air Restriction Indicator Light
Turn Signal Indicator Light
High Beam Indicator Light
PTO Engagement Indicator Light
MFWD Engagement Indicator Light

ELECTRICAL:
12-Volt Electrical System
One Battery - 950 CCA** with
180 Minute Reserve Capacity
7-Pin ASAE Outlet Socket
70 Amp Alternator

LIGHTS:
Two Front Halogen Headlights
Two Turn/Warning Lights
Single Rear Work Light

MISCELLANEOUS:
SMV Emblem
Tilt-Up Hood
Side-Mounted Toolbox
25 U.S. Gallon (95 L)
Fuel Tank Capacity

OPERATOR STATION:
CAB:
30 U.S. Gallon (115 L)
Fuel Tank Capacity
Left Hand Door Only
Air Conditioning
Mechanical Suspension Seat
Cup Holders
Radio/CD Ready (Antenna Cable,
Two Speakers, and Wiring Harness)
Front Windshield Wiper
90 Amp Alternator
Two Front/Two Rear Roof-Mounted
Work Lights
Two Front/Two Rear Roof-Mounted
Warning Lights
* Manufacturer's Rating
** Cold Cranking Amps

John Deere 5085M Standard Equipment for Base Tractor

ENGINE:
85 Engine Horsepower @ 2200RPM*
70 PTO Horsepower @ 2100 RPM*
Turbocharger with Intercooler
PowerTech Diesel Engine
4 Valve HPCR
Dry Type Air Cleaner with Safety Element
Underhood Muffler with Vertical Exhaust Stack
Cold Start Aid - Glow Plugs
Hand and Foot Throttle
Key Engine Shut Off
Water Separator Bowl
TRANSMISSION:
16F/16R PowrReverser Transmission
Right Hand Speed Controls
EH Differential Lock
Oil Cooler (DT Dependent)
Wet Traction Clutch
Park Lock
Neutral Start Safety Switch
REAR AXLE:
Flanged Rear Axle
Planetary Final Drives
FRONT AXLE:
Mechanical Front Wheel Drive Front Axle
Planetary Final Drives
Electro-Hydraulic MFWD Engagement via On/Auto/Brake
STEERING AND BRAKES:
Hydrostatic Power Steering
Hydraulic Wet Disk Brakes Self-Equalizing
and Self-Adjusting
HYDRAULIC:
Open Center Hydraulic System
Tandem Gear Pump 24.7 GPM
Maximum Total Flow -
Steering Pump 6.3 GPM (23.7 LPM)
Implement Pump 18.4 GPM
Dual Mid & Dual Rear SCV Control Valves
POWER TAKE-OFF SHAFT:
Independent "Live" 540 RPM Rear PTO Shaft
@ 2100 Engine RPM
Economy PTO Setting for 540 PTO RPM
@ 1645 Engine RPM
Electro-Hydraulic PTO Engagement
Wet PTO Clutch
Operator Presence Safety Warning - PTO
Safety Start Switch
Flip Up PTO Shield
ROCKSHAFT, HITCH AND DRAWBAR:
56mm Lift Cylinder
Standard Adjustable Straight Drawbar
Telescoping Draft Links with
Category II Balls
Lower Link Draft Sensing

INSTRUMENTATION:
Electric Fuel Gauge
Flashing Warning Lamp
High Beam Indicator Light
Service Transmission Indicator
PTO Speed Indicator/Roll Mode
Natural Indicator (PR Only)
Tachometer/Hour Meter
Engine Oil Pressure
Hydraulic Temperature Indicator
Coolant Temperature Gauge
Alternator Indicator Light
Air Restriction Indicator Light
Exhaust Filter Cleaning Switch
Roll Mode for Instrument Cluster
PTO Engagement Light (Rear PTO)
4WD Engagement Light (4WD Front Axle Only)
Hi/Lo Transmission Indicator Light
(32/16 Transmission Only)
ELECTRICAL:
12-Volt Electrical System
One Battery - 950 CCA** with
180 Minute Reserve Capacity
7-Pin ASAE Outlet Socket
LIGHTS:
Two Front Halogen Headlights
Two Turn/Warning Lights
MISCELLANEOUS:
SMV Emblem
Toolbox
English Operator's Manual
OPEN OPERATOR STATION (Code 2000):
2-Post Foldable Roll-Over Protective
Structure (ROPS) Less Canopy
Vinyl Seat with Flip Up Feature and
Retractable Seat Belt
Tilt and Telescopic Steering Column
30 U.S. Gallon (80L) Fuel Tank Capacity
70 Amp Alternator
Flashing Warning Light
Dual Tail Lights
Single Rear Work Light
Beverage Holder
8-Position Standard Steel Rear Wheels
with Two 16.9-30 6PR (R1) Tires
Two 11.2-24 6PR (R1) Front Tires
* Manufacturer's Rating
** Cold Cranking Amps
CODE

John Deere 6105M Standard Equipment for Base Tractor

ENGINE:
105 Engine hp (97/68/EC) @ Rated Speed
86 SAE PTO hp @ Rated Speed
John Deere PowerTech PVX Diesel
In-line 4-Cylinder Wet-Sleeve
with High Pressure Common Rail (HPCR)
Fuel System and 16 Valve Head
4.5 L (276 Cu. In.) Displacement
Variable Geometry Turbocharger and
Exhaust Gas Recirculation
Dual Temp Cooling System
PowerCore G2 Air Filtration System with
Permanent Pre-Cleaning and Safety Element
Underhood AfterTreatment System with
Deluxe Corner Post Exhaust
Self Priming and Bleeding Electronic Fuel Pump
58 Gal (220 L) Fuel Tank Capacity

TRANSMISSION:
PowrQuad PLUS 24F/24R Transmission; 25 mph (40km/h)
Electronic LH Reverser
Perma-Clutch II, Wet Multi-Disk Clutch
Park Lock
Neutral Safety Start System

STEERING, BRAKES, DIFFERENTIAL:
Hydrostatic Steering
Dual Stage Disk Brakes
Rear Axle Differential Lock

HYDRAULICS:
Load Sensing Constant Flow Pressure
Compensated (PC) System
21.1 GPM (80 L/min) Pump Output
80 GPM (80 L/min) Flow @ One SCV
1 SCV; Mechanical; ISO Couplers

REAR PTO:
540/1000 RPM, 1-3/8 In. Independent Rear PTO,
Reversible Shaft and PTO Master Shield
Electrohydraulic Activation
Wet Multi-Disk Clutch
Neutral Start Safety System
Seat Activated PTO Warning

ROCKSHAFT, HITCH AND DRAWBAR:
Electrohydraulic Hitch
3-Point (Category 2/3N) Hitch
5154 Lb. (2338 kg) Lift Capacity
Telescopic Draft Links
LH Telescopic Draft Link
Sway Control Blocks
Category 2 Swinging Drawbar with Hammerstrap
Adjustable Center Link with Ball End
RH & LH Rear Fender Hitch Controls

INSTRUMENTATION:
Display Functions Definable By Operator:
Ground Speed
PTO Speed
Engine Hours
Productivity
Efficiency
Area

INSTRUMENTATION:
Implement Width
Service Hours
Fuel Consumption Rate
Time of Day
Fuel Gauge
Engine Oil Pressure Indicator Light
Coolant Temperature
PTO Engagement
Alternator Indicator Light
Directional Indicators
Hazard Switch

CAB OPERATOR STATION:
ComfortGard Cab with Air Conditioning
and Heater
Two Doors
Front Windshield Wiper
Mechanical Suspension Seat with
Armrests and Seat Belt
Tilt/Telescopic Steering Column
Right-hand Operational Controls
Floor Mat
Foot Throttle Control
Power Outlet
Pre-Radio Wiring and Speaker Package
Overhead Courtesy Light
Rear View Mirror
Right Hand Steps and Hand Rail

ELECTRICAL:
Key Shutoff
12-Volt Electrical System
One 12-Volt Battery, 110 Ah (830 Cold Cranking
Amps)
90 Amp Alternator
3 Pin Power Outlet
7 Terminal Rear Implement Electrical Outlet Socket

LIGHTS:
Four Front Grille Headlights
Two Front Outer Roof Worklights
One Rear Right Roof Worklight
Four Roof Mounted Flashing Hazard Lights
Two Rear Fender Tail Lights
with Brake Lights

FRONT AXLE WHEELS AND TIRES:
MFWD
Steel Wheels
Electrohydraulic MFWD Engagement,
Right-hand Console
Two 14.9R24 In. Radial Tires

REAR AXLE WHEELS AND TIRES:
Flanged Axle
Eight Position Adjustable Steel Wheels
Two 18.4R34 In. Radial Rear Tires

MISCELLANEOUS:
Operator's Manual (English) and Holder
SMV Emblem

John Deere 6115M Standard Equipment for Base Tractor

ENGINE:
115 Engine hp (97/68/EC) @ Rated Speed
95 SAE PTO hp @ Rated Speed
John Deere PowerTech PVX Diesel
In-line 4-Cylinder Wet-Sleeve
with High Pressure Common Rail (HPCR)
Fuel System and 16 Valve Head
4.5 L (276 Cu. In.) Displacement
Variable Geometry Turbocharger and
Exhaust Gas Recirculation
Dual Temp Cooling System
PowerCore G2 Air Filtration System with
Permanent Pre-Cleaning and Safety Element
Underhood AfterTreatment System with
Deluxe Corner Post Exhaust
Self Priming and Bleeding Electronic Fuel Pump
58 Gal (220 L) Fuel Tank Capacity

TRANSMISSION:
PowrQuad PLUS 24F/24R Transmission; 25 mph (40km/h)
Electronic LH Reverser
Perma-Clutch II, Wet Multi-Disk Clutch
Park Lock
Neutral Safety Start System

STEERING, BRAKES, DIFFERENTIAL:
Hydrostatic Steering
Dual Stage Disk Brakes
Rear Axle Differential Lock

HYDRAULICS:
Load Sensing Constant Flow Pressure
Compensated (PC) System
21.1 GPM (80 L/min) Pump Output
80 GPM (80 L/min) Flow @ One SCV
1 SCV; Mechanical; ISO Couplers

REAR PTO:
540/1000 RPM, 1-3/8 In. Independent Rear PTO,
Reversible Shaft and PTO Master Shield
Electrohydraulic Activation
Wet Multi-Disk Clutch
Neutral Start Safety System
Seat Activated PTO Warning

ROCKSHAFT, HITCH AND DRAWBAR:
Electrohydraulic Hitch
3-Point (Category 2/3N) Hitch
5154 Lb. (2338 kg) Lift Capacity
Telescopic Draft Links
LH Telescopic Draft Link
Sway Control Blocks
Category 2 Swinging Drawbar with Hammerstrap
Adjustable Center Link with Ball End
RH & LH Rear Fender Hitch Controls

INSTRUMENTATION:
Display Functions Definable By Operator:
Ground Speed
PTO Speed
Engine Hours
Productivity
Efficiency
Area

INSTRUMENTATION:
Implement Width
Service Hours
Fuel Consumption Rate
Time of Day
Fuel Gauge
Engine Oil Pressure Indicator Light
Coolant Temperature
PTO Engagement
Alternator Indicator Light
Directional Indicators
Hazard Switch

CAB OPERATOR STATION:
ComfortGard Cab with Air Conditioning
and Heater
Two Doors
Front Windshield Wiper
Mechanical Suspension Seat with
Armrests and Seat Belt
Tilt/Telescopic Steering Column
Right-hand Operational Controls
Floor Mat
Foot Throttle Control
Power Outlet
Pre-Radio Wiring and Speaker Package
Overhead Courtesy Light
Rear View Mirror
Right Hand Steps and Hand Rail

ELECTRICAL:
Key Shutoff
12-Volt Electrical System
One 12-Volt Battery, 110 Ah (830 Cold Cranking
Amps)
90 Amp Alternator
3 Pin Power Outlet
7 Terminal Rear Implement Electrical Outlet Socket

LIGHTS:
Four Front Grille Headlights
Two Front Outer Roof Worklights
One Rear Right Roof Worklight
Four Roof Mounted Flashing Hazard Lights
Two Rear Fender Tail Lights
with Brake Lights

FRONT AXLE WHEELS AND TIRES:
MFWD
Steel Wheels
Electrohydraulic MFWD Engagement,
Right-hand Console
Two 14.9R24 In. Radial Tires

REAR AXLE WHEELS AND TIRES:
Flanged Axle
Eight Position Adjustable Steel Wheels
Two 18.4R34 In. Radial Rear Tires

MISCELLANEOUS:
Operator's Manual (English) and Holder
SMV Emblem

John Deere 6125M Standard Equipment for Base Tractor

ENGINE:
125 Engine hp (97/68/EC) @ Rated Speed
102 SAE PTO hp @ Rated Speed
John Deere PowerTech PVX Diesel
In-line 4-Cylinder Wet-Sleeve
with High Pressure Common Rail (HPCR)
Fuel System and 16 Valve Head
4.5 L (276 Cu. In.) Displacement
Variable Geometry Turbocharger and
Exhaust Gas Recirculation
Dual Temp Cooling System
PowerCore G2 Air Filtration System with
Permanent Pre-Cleaning and Safety Element
Underhood AfterTreatment System with
Deluxe Corner Post Exhaust
Self Priming and Bleeding Electronic Fuel Pump
58 Gal (220 L) Fuel Tank Capacity

TRANSMISSION:
PowrQuad PLUS 24F/24R Transmission; 25 mph (40km/h)
Electronic LH Reverser
Perma-Clutch II, Wet Multi-Disk Clutch
Park Lock
Neutral Safety Start System

STEERING, BRAKES, DIFFERENTIAL:
Hydrostatic Steering
Dual Stage Disk Brakes
Rear Axle Differential Lock

HYDRAULICS:
Load Sensing Constant Flow Pressure
Compensated (PC) System
21.1 GPM (80 L/min) Pump Output
80 GPM (80 L/min) Flow @ One SCV
1 SCV; Mechanical; ISO Couplers

REAR PTO:
540/1000 RPM, 1-3/8 In. Independent Rear PTO,
Reversible Shaft and PTO Master Shield
Electrohydraulic Activation
Wet Multi-Disk Clutch
Neutral Start Safety System
Seat Activated PTO Warning

ROCKSHAFT, HITCH AND DRAWBAR:
Electrohydraulic Hitch
3-Point (Category 2/3N) Hitch
5154 Lb. (2338 kg) Lift Capacity
Telescopic Draft Links
LH Telescopic Draft Link
Sway Control Blocks
Category 2 Swinging Drawbar with Hammerstrap
Adjustable Center Link with Ball End
RH & LH Rear Fender Hitch Controls

INSTRUMENTATION:
Display Functions Definable By Operator:
Ground Speed
PTO Speed
Engine Hours
Productivity
Efficiency
Area

INSTRUMENTATION:
Implement Width
Service Hours
Fuel Consumption Rate
Time of Day
Fuel Gauge
Engine Oil Pressure Indicator Light
Coolant Temperature
PTO Engagement
Alternator Indicator Light
Directional Indicators
Hazard Switch

CAB OPERATOR STATION:
ComfortGard Cab with Air Conditioning
and Heater
Two Doors
Front Windshield Wiper
Mechanical Suspension Seat with
Armrests and Seat Belt
Tilt/Telescopic Steering Column
Right-hand Operational Controls
Floor Mat
Foot Throttle Control
Power Outlet
Pre-Radio Wiring and Speaker Package
Overhead Courtesy Light
Rear View Mirror
Right Hand Steps and Hand Rail

ELECTRICAL:
Key Shutoff
12-Volt Electrical System
One 12-Volt Battery, 110 Ah (830 Cold Cranking
Amps)
90 Amp Alternator
3 Pin Power Outlet
7 Terminal Rear Implement Electrical Outlet Socket

LIGHTS:
Four Front Grille Headlights
Two Front Outer Roof Worklights
One Rear Right Roof Worklight
Four Roof Mounted Flashing Hazard Lights
Two Rear Fender Tail Lights
with Brake Lights

FRONT AXLE WHEELS AND TIRES:
MFWD
Steel Wheels
Electrohydraulic MFWD Engagement,
Right-hand Console
Two 14.9R24 In. Radial Tires

REAR AXLE WHEELS AND TIRES:
Flanged Axle
Eight Position Adjustable Steel Wheels
Two 18.4R34 In. Radial Rear Tires

MISCELLANEOUS:
Operator's Manual (English) and Holder
SMV Emblem

New Holland Tractors for "Turn-key" Packages

Part #	Model Description	Transmission	Tire Sizes	Engine HP Rating	List Pricing
02991978	**2013 New Holland TS6.110**	**16F x 8 R w/ Power Shuttle**	**14.9-24-18.4-34**	**110**	**65,096**
TBD	2WD w/ *Heavy Duty Axle* Downgrade	16F x 8 R w/ Power Shuttle	10.00-16/18.4-34		(1,916)
TBD	Rops 4WD Downgrade	16F x 8 R w/ Power Shuttle	14.9-24-18.4-34		(6,887)
TBD	ROPS 2WD w/ *Heavy Duty Axle* Downgrade	16F x 8 R w/ Power Shuttle	10.00-16/18.4-34		(8,426)
TBD	2013 New Holland TS6.120	16F x 8 R w/ Power Shuttle	14.9-24-18.4-34	118	66,593
TBD	2WD w/ *Heavy Duty Axle* Downgrade	16F x 8 R w/ Power Shuttle	10.00-16/18.4-34		(1,916)
TBD	Rops 4WD Downgrade	16F x 8 R w/ Power Shuttle	14.9-24-18.4-34		(6,887)
TBD	ROPS 2WD w/ *Heavy Duty Axle* Downgrade	16F x 8 R w/ Power Shuttle	10.00-16/18.4-34		(8,426)
02991979	**2013 New Holland TS6.125**	**16F x 8 R w/ Power Shuttle**	**14.9-24-18.4-34**	**124**	**72,311**
TBD	2WD Downgrade	16F x 8 R w/ Power Shuttle	10.00-16/18.4-34		(3,560)
TBD	Rops 4WD Downgrade	16F x 8 R w/ Power Shuttle	14.9-24-18.4-34		(7,151)
TBD	ROPS 2WD Downgrade	16F x 8 R w/ Power Shuttle	10.00-16/18.4-34		(10,709)
2991482	2012 New Holland TV6070 Bi-Directional	Multi-Range/Closed-Loop Hydrostatic	440/80R28 Non-Directional	105	130,558

Numbers in (****) are deducts. Subtract amount from stock tractor pricing.

New Holland TS6.110 Standard Equipment for Base Tractor

ENGINE:
110 Gross Engine hp
90 PTO hp @ 2200 rpm
274 cu. in. (4.5L) Displacement
4 Cylinder Turbocharged Intercooled Engine
Tier III Emmissions Compliant
Bosch Fuel Injection Pump (mechanical)
Vertical Muffler/ Exhaust Hydraulic
Electric Engine Shutoff
Under Hood Dual Element Dry Air Cleaner
Fixed Fan
Cooling System with Antifreeze
Water Separator and Dual Fuel Filters
Plastic Fuel Tank
4 Cyl Models- 39.6 gallon (150L) Fuel Capacity -
6 Cyl Models- 62 gallon (235L) Fuel Capacity
Grid Heater Starting Aid

TRANSMISSION:
8 Forward x 8 Reverse
Main gearbox synchronized
Left-hand shuttle lever
(2) Right-hand Shift Levers
14 in.Cerametalic Clutch

STEERING, BRAKES, DIFFERENTIAL:
Hydrostatic Power Steering
Wet Brakes (equalizing and self-adjusting)
Park Brake Lever

HYDRAULICS:
Open Center System
Dual Gear Pumps
Maximum Flow at Rated Engine Speed:
Implement Pump: 13 gpm
Steering Pump: 7 gpm
Total Flow: 20 gpm
(2) Close Center Deluxe Remotes with Flow
Controls, Adjustable Detents and (4)

REAR PTO:
Independent, 540/1000 rpm PTO
Multi-plate Wet Clutch
Mechanical Engagement

ROCKSHAFT, HITCH AND DRAWBAR:
Top Link Draft Sensing
3600 lbs. Lift Capacity @ 24 in. (ASAE)
Category II, 3-point Linkage with Flexible Link Ends
Telescopic Stabilizers
Swinging Drawbar

INSTRUMENTATION:
Tachometer/Hour Meter
Fuel Gauge
Coolant Temperature Gauge
Engine Oil Pressure Warning Light
Alternator Warning Light
Air Cleaner Restriction Light
Fuel System Water Separator Warning Light
Transmission Oil Pressure Light
Parking Brake On" Light
FWD On Light
Headlights On Light

ELECTRICAL:
(1) 12-volt, 950 cca Battery
120 amp Alternator
7-pin Outlet for trailer/implement lighting
Single Pin (8 amp) Accessory Power
Outlet
Safety Start Switch
Horn

CAB OPERATOR STATION:
ROPS protected, flat deck platform with heat and air conditioning,
tinted windshield, retractable sun screen, front wiper and washer,
two doors with locks, left hand and right hand entry steps,
interior mirror, two external mirrors, partially opening side
external mirrors, partially opening side windows, hinged rear window
(fully opens), radio ready (speakers, wiring, antenna)
Steering Wheel - adjustable tilt Seat - Cloth covered with mechanical
Seat - Cloth covered with mechanical suspension, operator's presence
sensor, retractable seat belts and arm rests
Suspended Brake and Clutch Pedals
Power Outlet
Pre-Radio Wiring and Speaker Package
Overhead Courtesy Light
Rear View Mirror
Right Hand Steps and Hand Rail

ROPS OPERATOR STATION
ROPS
ISO Mounted Platform
Deluxe Vinyl Mechanical Seat with Operator's Presence Sensor
Tilt Steering Wheel
Retractable Seat Belt
Full Coverage Fenders
Rubber Floor Mat
Left Hand Entry Steps
Suspended Brake and Clutch Pedals
Folding ROPS

LIGHTING:
ROPS Models
2) Dual Beam Halogen Headlights Rear Worklight
(2) Rear Light Assemblies which include:
Turn Signal Lights
Rear Brake Lights
Flashing Safety Lights
Cab Models
(2) Halogen Headlights and (2) Worklights
(2) Rear Worklights
(2) Rear Light Assemblies which include:
Turn Signal Lights
Rear Brake Lights
Flashing Safety Lights

FRONT AXLE WHEELS AND TIRES:
Front - 2WD
55° Turning Angle
12° Axle Oscillation
Adjustable Tread Width from 56 in.
Front - FWD
4 cylinder - Class 3 Standard Duty
6 cylinder - Class 3 Heavy Duty
Limited Slip Front Wheel Drive
Mechanical FWD Engagement
55° Turning Angle
12° Axle Oscillation
Front Drive Shaft Shield
Manual Adjustable Tread Width from 64 in. to 80 in.

REAR AXLE WHEELS AND TIRES:
Rear- All Models
Manual Adjustable Tread Width from 64 in. to 80 in.

MISCELLANEOUS:
Pivoting Engine Hood
SMV Emblem
Toolbox

WARRANTY
New Holland Standard Warranty Applies

New Holland TS6.125 Standard Equipment for Base Tractor

ENGINE:
124 Gross Engine hp
105 PTO hp @ 2200 rpm
411 cu in. (6.7L) Displacement to 80 in.
6 Cylinder Turbocharged Intercooled Engine
Tier III Emmissions Compliant
Bosch Fuel Injection Pump (mechanical)
Vertical Muffler/ Exhaust Hydraulic
Electric Engine Shutoff
Under Hood Dual Element Dry Air Cleaner
Fixed Fan
Cooling System with Antifreeze
Water Separator and Dual Fuel Filters
Plastic Fuel Tank
4 Cyl Models- 39.6 gallon (150L) Fuel Capacity -
6 Cyl Models- 62 gallon (235L) Fuel Capacity
Grid Heater Starting Aid

TRANSMISSION:
8 Forward x 8 Reverse
Main gearbox synchronized
Left-hand shuttle lever
(2) Right-hand Shift Levers
14 in.Cerametalic Clutch

STEERING, BRAKES, DIFFERENTIAL:
Hydrostatic Power Steering
Wet Brakes (equalizing and self-adjusting)
Park Brake Lever

HYDRAULICS:
Open Center System
Dual Gear Pumps
Maximum Flow at Rated Engine Speed:
Implement Pump: 13 gpm
Steering Pump: 7 gpm
Total Flow: 20 gpm
(2) Close Center Deluxe Remotes with Flow
Controls, Adjustable Detents and (4)

REAR PTO:
Independent, 540/1000 rpm PTO
Multi-plate Wet Clutch
Mechanical Engagement

ROCKSHAFT, HITCH AND DRAWBAR:
Top Link Draft Sensing
3600 lbs. Lift Capacity @ 24 in. (ASAE)
Category II, 3-point Linkage with Flexible Link Ends
Telescopic Stabilizers
Swinging Drawbar

INSTRUMENTATION:
Tachometer/Hour Meter
Fuel Gauge
Coolant Temperature Gauge
Engine Oil Pressure Warning Light
Alternator Warning Light
Air Cleaner Restriction Light
Fuel System Water Separator Warning Light
Transmission Oil Pressure Light
Parking Brake On" Light
FWD On Light
Headlights On Light

ELECTRICAL:
(1) 12-volt, 950 cca Battery
120 amp Alternator
7-pin Outlet for trailer/implement lighting
Single Pin (8 amp) Accessory Power
Outlet
Safety Start Switch
Horn

CAB OPERATOR STATION:
ROPS protected, flat deck platform with heat and air conditioning,
tinted windshield, retractable sun screen, front wiper and washer,
two doors with locks, left hand and right hand entry steps,
interior mirror, two external mirrors, partially opening side
external mirrors, partially opening side windows, hinged rear window
(fully opens), radio ready (speakers, wiring, antenna)
Steering Wheel - adjustable tilt Seat - Cloth covered with mechanical
Seat - Cloth covered with mechanical suspension, operator's presence
sensor, retractable seat belts and arm rests
Suspended Brake and Clutch Pedals
Power Outlet
Pre-Radio Wiring and Speaker Package
Overhead Courtesy Light
Rear View Mirror
Right Hand Steps and Hand Rail

ROPS OPERATOR STATION
ROPS
ISO Mounted Platform
Deluxe Vinyl Mechanical Seat with Operator's Presence Sensor
Tilt Steering Wheel
Retractable Seat Belt
Full Coverage Fenders
Rubber Floor Mat
Left Hand Entry Steps
Suspended Brake and Clutch Pedals
Folding ROPS

LIGHTING:
ROPS Models
2) Dual Beam Halogen Headlights Rear Worklight
(2) Rear Light Assemblies which include:
Turn Signal Lights
Rear Brake Lights
Flashing Safety Lights
Cab Models
(2) Halogen Headlights and (2) Worklights
(2) Rear Worklights
(2) Rear Light Assemblies which include:
Turn Signal Lights
Rear Brake Lights
Flashing Safety Lights

FRONT AXLE WHEELS AND TIRES:
Front - 2WD
55° Turning Angle
12° Axle Oscillation
Adjustable Tread Width from 56 in.
Front - FWD
4 cylinder - Class 3 Standard Duty
6 cylinder - Class 3 Heavy Duty
Limited Slip Front Wheel Drive
Mechanical FWD Engagement
55° Turning Angle
12° Axle Oscillation
Front Drive Shaft Shield
Manual Adjustable Tread Width from 64 in. to 80 in.

REAR AXLE WHEELS AND TIRES:
Rear- All Models
Manual Adjustable Tread Width from 64 in. to 80 in.

MISCELLANEOUS:
Pivoting Engine Hood
SMV Emblem
Toolbox

WARRANTY
New Holland Standard Warranty Applies

New Holland TV6070 Standard Equipment for Base Tractor

ENGINE:
105 PTO hp @ 1000 rpm PTO Speed
6.7L Displacement (411 cu. in.)
6 Cylinders, Turbocharged and
Intercooled
55-gallon U.S. Fuel Tanks
Water Separator and Fuel Filter
Right-hand Vertical Exhaust with underhood muffler
Dry Dual Element Air Filter with aspirated precleaner
Full Flow Vertical Oil Filter
Coolant Recovery System
Polyvee Fan Belt with tensioner
Cold Weather Starting Kit,including
Block Heater and Grid Heater
Hand Throttle

TRANSMISSION:
Hydrostatic
Eight (8) Range Hydroshift
Transmission Oil Heater

OPERATOR'S STATION:
Turnabout Console
ROPS Certified Deluxe 2-Door Cab
Six (6) Position 210° Rotating Operator's Station
Foot Controls used for cab end operation
of two (2) remote valves
Three (3) Console Mount Color Code
Control Levers
Engine and Cab End Wipers
Integrated Dual Filter Heating and Air Conditioning
Adjustable Air Suspension Seat with lumbar support
Fabric Covered Seat with armrests
Interior Rearview Mirrors
Tilt and Telescopic Steering Wheel
Digital Electronic Instrument Panel
Center Point Cab Mounts
AM/FM Weather Band Delco
Radio

LIGHTING:
Engine End Forward:
(2) Tail and Brake Lights
(2) Hood Road Lights
(2) Roof Halogen Worklights
(2) Turn Signal (flashers)
Cab End Forward:
(2) Headlamps
(4) Roof Halogen Worklights
(2) Turn Signals (fender mounted)
(2) Flashing Safety Lights
(2) Tail and Brake Lights
Pre-wired for Rotating Beacon
Lighting meets Ohio standards

STEERING:
Symmetric Center Articulation 45° (onewheel track)

AXLES:
Engine End: Flange Type
Cab End: Flange Type with Differential Lock
Full Time Four-Wheel-Drive
Ground Clearance is 16 in. with 480/85R34 tires

BRAKES:
Wet Disc Hydraulic Power Brakes(self-equalizing/
self-adjusting)
Independent Parking Brake

WHEELS:
Manual Adjust (60 in. to 80 in.)

WHEEL WEIGHTS
(2) 1500 lbs. Weights on Engine End
34 in. and 38 in. Wheels

SMV EMBLEM AND REFLECTORS
Can be used on cab or engine end.

CAB END PTO:
Auto-feathering fully independent
540/1000 rpm with 1-3/8 in. shaft. Meets ASAE Standards
Automatic PTO Brake
Safety Interlock to prevent accidental re-engagement

INSTRUMENTATION:
Digital Electronic Instrument Cluster
Backlit Instrument Illumination
Displays:
Hour Service Hour Meter
Tachometer/Speedometer/Voltmeter
Fuel Level Gauge
Hydrostatic Range Indicator
Left/Right Turn Signal Indicator
High Beam Indicator
PTO Indicator
Hazard Flashers
Engine Coolant Temperature Gauge
Hydraulic Oil Temperature Alarm
Engine Oil Pressure Alarm
Filter Bypass Alarm
Air Restriction Alarm
Parking Brake Alarm
Differential Lock Indicator

CLOSED-CENTER, LOAD-SENSING HYDRAULIC SYSTEM:
30 gpm
Three (3) Remote Valves with Couplers (cab end)
Cab End 3-point Hitch, Category II:
6560 lbs. Lift Capacity
Electronic Position Control
Flexible Link Ends
Fender Switches (left and right)

ELECTRICAL:
12-volt, Negative Ground
120 amp Alternator
Electronic 7-pin Trailer Connector
Two (2) 3-pin Accessory Sockets
Two (2) 950 cca Batteries

WARRANTY
New Holland Standard Warranty Applies
Please Note: 8-ply tires are recommended if the unit is to be used
with a Discbine® Disc Mower-conditioner

LOADER SPECIFICATIONS:
Per ASAE S301.3 (equipped with 480/85 R34 tires)
MODEL 82LB
Maximum Lift Height ..... 144 in.
Dump Clearance..... 110 in.
Digging Depth ..... 3 in.
Lift Capacity at bucket pivot point..... 6965 lbs.
Lift Capacity at 800mm from bucket pivot point ..... 4390 lbs.
Breakout Force at bucket pivot point ..... 13440 lbs.
Breakout Force at 800mm from bucket pivot point ..... 8200 lbs.
Reach @ Maximum Lift..... 41.4 in.
Bucket Rollback ..... 30° (25° with grapple)
Bucket Dump Angle..... 60°
MODEL 84LB
Maximum Lift Height ..... 158 in.
Dump Clearance..... 124 in.
Digging Depth ..... 4 in.
Lift Capacity at bucket pivot point..... 6150 lbs.
Lift Capacity at 800mm from bucket pivot point ..... 4400 lbs.
Breakout Force at bucket pivot point ..... 8000 lbs.
Breakout Force at 800 mm bucket pivot point ..... 5950 lbs.
Reach @ Maximum Lift..... 64 in.
Rollback ..... 21° (25° with grapple)
Bucket Dump Angle..... 75°

SWINGING DRAWBAR

TOOLBOX

TRAXX™RF

Remote-Control Mower

TRAXX™RF BASE UNIT STANDARD FEATURES

- Rubber Tracks w/Steel Cleats (Installed)
- Spike Kit w/Rubber Transport Pads (Boxed for Customer Assy.)
- Roll Guard/Frame (Installed)
- High Pressure Grease Gun Kit (Included)
- LED Strobe Light (Installed)
- Towing Kit Accessories (Included)

ORDER CODE	DESCRIPTION		NET PRICE
	TRAXX™ RF BASE UNIT		
04773000	TRAXX™RF All-Terrain Vehicle		$75,506
	ATTACHMENTS - Choose One		
04773200	51" (1.3m) Hammer Knife Flail Head		$8,450
04773100	51" (1.3m) Y Knife Flail Head		$7,350
	OPTIONS		
TR477002	Rubber Tracks (Boxed Set of 2/Customer Assy)		$2,831
TR477622	Replacement Cutter Shaft with Hammer Knives		$3,597
TR477623	Replacement Cutter Shaft with Y Knives		$2,497
TR477136	High Pressure Grease Gun Kit (One kit is included with Base Unit)	NET	$314
TR477147	High Wear Kit for Hammer Knife Flail Head	NET	$1,295
TR477143	High Wear Kit for Y Knife Flail Head	NET	$1,227
TR477144	Additional Operators Manual	NET	$35
TR477145	Additional Parts Manual	NET	$35

PRICING EFFECTIVE 11-1-11

R071612

WHOLEGOODS PRICE BOOK

STATE OF OHIO
STATE TERM SCHEDULE
SCHEDULE NUMBER: 7751500508

1502 E. Walnut St., Seguin, TX 78155 800-882-5756 800-882-5758 fax
www.terrainking.com boom@terrainking.com oemparts@terrainking.com

Flail King 74, 88, 96

Flail Mowers

- 74“, 88”, 96” Cutting Widths
- 10-Gauge Unitized Cutter Housing
- 5/16" Side Plates
- CAT I or CAT II Three-Point Hitch
- 4-1/2" x 5/16" Wall Cuttershaft
- 1-15/16" Bore Greaseable, Self Aligning Cuttershaft Bearings
- 60 HP Gearbox
- CAT 4 Driveline
- Belt Drive from Gearbox to Cuttershaft with Automatic Spring Tension
- 6" Adjustable Rear Roller
- 1" - 6" Cutting Height
- Front & Rear Deflectors
- Factory Set-Up
- Cutting Capacity: 1" diameter material
- 74” Req: Min 35 HP
- 88” Req: Min 40 HP
- 96” Req: Min 50 HP

PRICING EFFECTIVE SEPTEMBER 1, 2011

ORDER CODE	DESCRIPTION	APPROX WEIGHT	LIST PRICE
34802990739	74” Flail King , Center, 3 oz Knives	930	$6408
34802990740	74” Flail King, Center, 4 oz Knives	930	$6595
348988037	88” Flail King, Center, 3 oz Knives	1035	$6499
348988040	88” Flail King, Center, 4 oz Knives	1035	$6722
348988058	96” Flail King, Center, 3 oz Knives	1170	$7237
348988067	96” Flail King, Center, 4 oz Knives	1170	$7481
OPTIONS			
37002990357A	Additional Operators and Parts Manuals		$45
30002991274	Rear Mower High Wear Kit		$672
308701150	Lift Chain	7	$92
30000889899	Additional 12 Month Warranty		$1794

*7oz knives available upon request

1502 E. Walnut St., Seguin, TX 78155
800-882-5756 800-882-5758 fax
boom@terrainking.com
oemparts@terrainking.com

Terrain Master 74 and 88

Right-Hand Flail Mowers

- 74“and 88” Cutting Widths
- Full-Length Welded Tubular Frame with Transport Lock
- 25-Gallon Reservoir with 10 Micron Filtration
- Piston Pump Rated @ 24 GPM @ 3800 PSI
- 2-Spool Valve with Float Detent Position
- Automatic Cut-Off Switch
- 10-Gauge Unitized Cutter Housing
- 1/2" Inboard & 5/16" Outboard Side Plates
- Replaceable Skid Shoes
- 4-1/2" x 5/16" Wall Cuttershaft
- 1-5/16" Bore Greaseable, Self-aligning Cuttershaft Bearings
- 60 HP Piston Motor
- Belt Drive From Motor To Cuttershaft with Automatic Spring Tension
- 6" Adjustable Rear Roller
- 1" to 6" Cutting Height
- Front and Rear Safety Deflectors

PRICING EFFECTIVE SEPTEMBER 1, 2011

ORDER CODE	DESCRIPTION	APPROX WEIGHT	LIST PRICE
348988005	74” Terrain Master, 3 oz Knives	1200	$19375
348988008	74” Terrain Master, 4 oz Knives	1205	$19507
348988009	88” Terrain Master, 3 oz Knives	1250	$19589
348988012	88” Terrain Master, 4 oz Knives	1255	$19716
MOUNT KIT (Required)			
30002985128 30002985084	M105S Cab/4wd (18.4-30 12.4-24) *4wd requires clipped foot guard		$8575
30802990553 30002990554	M8540/M9540 Cab/2wd/4wd (18.4-30 12.4-24) *4wd requires clipped foot guard		$7377
OPTIONS			
348988058	96” Flail King, Center, 3 oz Knives	1170	$7237
348988067	96” Flail King, Center, 4 oz Knives	1170	$7481
300107519	74” Right Hand Clipped Foot Guard	37	$332
300107524	88” Right Hand Clipped Foot Guard	42	$398
37002990357A	Additional Operators and Parts Manuals		$45
300801022	Mounting Labor & Oil		$4546
30002987303	Right Wing High Wear Kit		$679
30002991274	Rear Mower High Wear Kit		$672
308701150	Lift Chain	7	$92
30000889899	Additional 12 Month Warranty		$1794

*7oz knives available upon request

1502 E. Walnut St., Seguin, TX 78155
800-882-5756 800-882-5758 fax
boom@terrainking.com
oemparts@terrainking.com

83011

Terrain Master 19’4” and 21’7”

Tri-Wing Flail Mowers

BASE UNIT SPECIFICATIONS

- 19’4” and 21’7” Overall Cutting Widths
- Full-Length Welded Tubular Frame with Transport Lock
- 25-Gallon Reservoir with 10 Micron Filtration
- Tandem Piston Pumps Rated @ 24 GPM @ 3800 PSI
- 4-Spool Valve with Float Detent Position

WING MOWER SPECIFICATIONS

- 74", or 88" Cutting Widths
- 1/2" Inboard & 5/16" Outboard Side Plates
- Replaceable Skid Shoes
- 4-1/2" x 5/16" Wall Cuttershaft
- 1-5/16" Bore Greaseable, Self-aligning Cuttershaft Bearings
- 53 HP Piston Motor
- Belt Drive From Motor To Cuttershaft with Automatic Spring Tension
- 6" Adjustable Rear Roller
- 1" to 6" Cutting Height
- Front and Rear Safety Deflectors
- Automatic Cut-Off Switch
- 10-Gauge Unitized Cutter Housing

REAR MOWER SPECIFICATIONS

- 96" Cutting Width
- 10-Gauge Unitized Cutter Housing
- 5/16" Side Plates
- CAT I or CAT II Three-Point Hitch
- 4-1/2" x 5/16" Wall Cuttershaft
- 1-5/16" Bore Greaseable, Self-Aligning Cuttershaft Bearings
- 60 HP Gearbox
- 6" Adjustable Rear Roller
- 1" to 6" Cutting Height
- Front and Rear Safety Deflectors
- CAT 4 Driveline
- Belt Drive From Gearbox To Cuttershaft with Automatic Spring Tension

PRICING EFFECTIVE SEPTEMBER 1, 2011

ORDER CODE	DESCRIPTION	APPROX WEIGHT	LIST PRICE
34802990743	19’4” Terrain Master, 3 oz Knives	4570	$41090
34802990744	19’4” Terrain Master, 4 oz Knives	4574	$41393
34802990745	21’7” Terrain Master, 3 oz Knives	4620	$41738
34802990746	21’7” Terrain Master, 4 oz Knives	4624	$42039
MOUNT KIT (Required)			
30002990742	M108S Cab/2wd/4wd (13.6-24 18.4-34) Cast Rims		$13325
OPTIONS			
37002990357A	Additional Operators and Parts Manuals		$45
300803399	Mounting Labor & Oil		$7390
1-30002991274 2-30002987303	Rear Mower High Wear Kit Right Wing/Left Wing High Wear Kits		$2030
308701150	Lift Chain	7	$92
33002972480	Left-Wing Remote Positioning System		$2695
30000889899	Additional 12 Month Warranty		$2450

*7oz knives available upon request

1502 E. Walnut St., Seguin, TX 78155
800-882-5756 800-882-5758 fax
boom@terrainking.com
oemparts@terrainking.com

83011

KB1800 BOOM
18’ Articulated Model

PRICING EFFECTIVE February 15, 2011

ORDER CODE	DESCRIPTION	APPROX WEIGHT	LIST PRICE
18' BASE UNIT (One Choice Required)			
30004831821	KB1800 Boom with Lever Controls	5,000	$34,308
30004831820	KB1800 Boom with Electronic Joystick	5,000	$40,913
MOWER HEAD (One Choice Required)			
34802986190	5' Rotary w/Ctr Hyd Door, Blade Bar & Head Swivel	1,115	$13,582
34802986203	5' Rotary w/Ctr Hyd Door, Blade Bar (No Head Swivel)	1,061	$11,708
34802986251	4' Heavy Duty Flail w/Ctr Hyd Door & Head Swivel	12,314	$13,444
34802986253	4' Heavy Duty Flail w/Ctr Hyd Door (No Head Swivel)	777	$11,571
34802986252	4' Flail w/3oz Grass Knives (No Head Swivel)	---	$12,839
34802986235	Saw Head - 4 Blade (No Head Swivel)	1098	$14,422
OPTIONS			
30002983328A	Additional Operators and Parts Manuals		$45
33002989326	Quick Hitch Kit *		$3,650
33002989327	Hydraulic Kit for Quick Hitch Head **		$484
30002975647	Flail Jack Stand Kit ***		$299
30002988458	Rotary Head High Wear Kit		$1,200
30002988459	Flail-Axe Head High Wear Kit		$1,874
30002988460	Saw Head High Wear Kit		$4,497
30002990017	Grass Flail Head High Wear Kit		$4,497
30002985029	Mount Labor, Calcium Chloride & Oil		$6,560
30000889809	Additional 12 Month Warranty		$3,702

* Includes all components to convert the boom and one head
** Required to convert additional heads
*** Required to level the head for quick hitch applications

- 18’ minimum horizontal reach
- 17’ 1” minimum vertical reach
- 7’ 4” below grade reach
- Two section articulated boom.
- Inner Boom Arm: 6” x 6” x ¼” Alloy Steel Tubing
- Outer Boom Arm: 5” x 5” x ¼” Alloy Steel Tubing
- 2” diam. main pivot pins with greaseable, Connex® bushings
- Turret-style turning arm with 180° hydraulic swing
- Self-contained hydraulic system with joystick or lever controls
- 20 gal front-mounted reservoir 35 gal total system volume
- Motor circuit gear pump rated 30 gpm (53 hp) and 3,000 psi at 2,200 rpm
- Control circuit gear pump rated 12 gpm (21 hp) and 3,000 psi at 2,200 rpm
- 2,400# frame counterweight and 500# wheel weight included
- ¾” Full-frame mount kit design included in base price
- Shields® Premier polycarbonate windows with Supercoat™ finish
- 8,000# minimum tractor weight with a 95” minimum wheelbase
- 95 minimum net engine horsepower 84 minimum pto horsepower

Note:

- Terrain King KB series booms are recommended for cab tractor applications only
- Designed to fit Kubota M96S & M108S tractor models or approved equal
- Minimum applicable tire combination: 13.6R24/18.4R34 radials or approved equal
- Rear wheel design (cast or pressed steel) must be specified when ordering

1502 E. Walnut St., Seguin, TX 78155
800-882-5756 800-882-5758 fax
boom@terrainking.com
oemparts@terrainking.com

KB2200 BOOM
22’ Articulated Model

PRICING EFFECTIVE February 15, 2011

ORDER CODE	DESCRIPTION	APPROX WEIGHT	LIST PRICE
22' BASE UNIT (One Choice Required)			
30004832221	KB2200 Boom with Lever Ctrls	5,200	$36,022
30004832220	KB2200 Boom with Electronic Joystick	5,200	$42,076
MOWER HEAD (One Choice Required)			
34802986190	5' Rotary w/Ctr Hyd Door, Blade Bar & Head Swivel	1,115	$13,582
34802986203	5' Rotary w/Ctr Hyd Door, Blade Bar (No Head Swivel)	1,061	$11,708
34802986251	4' Heavy Duty Flail w/Ctr Hyd Door & Head Swivel	12,314	$13,444
34802986253	4' Heavy Duty Flail w/Ctr Hyd Door (No Head Swivel)	777	$11,571
34802986252	4' Flail w/3oz Grass Knives (No Head Swivel)	---	$12,839
34802986235	Saw Head - 4 Blade (No Head Swivel)	1098	$14,422
OPTIONS			
30002983328A	Additional Operators and Parts Manuals		$45
33002989326	Quick Hitch Kit *		$3,650
33002989327	Hydraulic Kit for Quick Hitch Head **		$484
30002975647	Flail Jack Stand Kit ***		$299
30002988458	Rotary Head High Wear Kit		$1,200
30002988459	Flail-Axe Head High Wear Kit		$1,874
30002988460	Saw Head High Wear Kit		$4,497
30002990017	Grass Flail Head High Wear Kit		$4,497
30002985029	Mount Labor, Calcium Chloride & Oil		$6,560
30000889809	Additional 12 Month Warranty		$3,702

* Includes all components to convert the boom and one head
** Required to convert additional heads
*** Required to level the head for quick hitch applications

- 22’ minimum horizontal reach
- 19’ 7” minimum vertical reach
- 9’ 7” below grade reach
- Two section articulated boom.
- Inner Boom Arm: 6” x 6” x ¼” Alloy Steel Tubing
- Outer Boom Arm: 5” x 5” x ¼” Alloy Steel Tubing
- 2” diam. main pivot pins with greaseable, Connex® bushings
- Turret-style turning arm with 180° hydraulic swing
- Self-contained hydraulic system with joystick or lever controls
- 20 gal front-mounted reservoir 35 gal total system volume
- Motor circuit gear pump rated 30 gpm (53 hp) and 3,000 psi at 2,200 rpm
- Control circuit gear pump rated 12 gpm (21 hp) and 3,000 psi at 2,200 rpm
- 2,400# frame counterweight and 1,300# wheel weight included
- ¾” Full-frame mount kit design included in base price
- Shields® Premier polycarbonate windows with Supercoat™ finish
- 8,000# minimum tractor weight with a 95” minimum wheelbase
- 95 minimum net engine horsepower 84 minimum pto horsepower

Note:

• Terrain King KB series booms are recommended for cab tractor applications only

• Designed to fit Kubota M96S & M108S tractor models or approved equal

• Minimum applicable tire combination: 13.6R24/18.4R34 radials or approved equal

• Rear wheel design (cast or pressed steel) must be specified when ordering

1502 E. Walnut St., Seguin, TX 78155
800-882-5756 800-882-5758 fax
boom@terrainking.com
oemparts@terrainking.com