INVITATION TO BID

State of Ohio
Department of Administrative Services
General Services Division
Office of Procurement Services

The Original Signed Bid must be submitted to the Office of Procurement Services to receive consideration for award.	BIDDER NAME
BID NUMBER: OT905815 — OPENING DATE (1:00 p.m.): November 21, 2014	STREET ADDRESS ☐ Check if remit address is different and list on separate sheet
	CITY / STATE / ZIP
General Services Division Office of Procurement Services 4200 Surface Road Columbus, OH 43228-1395 Attn: Bid Desk	COUNTY / MBE/EDGE CERTIFICATE NUMBER
	TELEPHONE NO. ( ) / TOLL FREE NO. 1 - ( )
	CONTACT PERSON / FAX NO. ( )
REQ./INDEX NO. OPI060 / BID NOTICE DATE November 7, 2014	CONTRACTOR'S E-MAIL ADDRESS

SELECT YOUR PREFERRED METHOD OF RECEIVING PURCHASE ORDERS AND ENTER THE E-MAIL OR FAX NUMBER INFORMATION (ONLY SELECT ONE METHOD)

☐ E-Mail ☐ Fax

In addition to the standard terms for payment, the payment terms for state agency(ies) will be 2%,10 Days, Net 30 Days unless otherwise stated in the following space. If no discount is offered, bidder should circle "Net 30 Days". _____%, ____Days, Net 30 Days

PARTICIPATING AGENCY(IES): DEPARTMENT OF REHABILITATION AND CORRECTION, (DRC) OHIO PENAL INDUSTRIES (OPI),MADISON CORRECTIONAL INSTITUTION, 1851 STATE ROUTE 56 P.O. BOX 740, LONDON, OH 43140

MINORITY SET-ASIDE BID IN ACCORDANCE WITH ORC CH. 125.081

THE DEPARTMENT OF ADMINISTRATIVE SERVICES, OFFICE OF PROCUREMENT SERVICES, IS SOLICITING BIDS FOR:

PLASTIC BAG FILM

TERM OF CONTRACT: This Invitation to Bid is to establish a requirements contract to procure the described supplies or services on behalf of the above participating agency(ies). The agency(ies) may place orders against the Contract beginning 03/01/15 or upon the date when DAS signs the Contract, whichever is later in time. The Contract will expire 02/28/18 unless DAS terminates the Contract based upon reasons set forth in Article I-C of the Standard Contract Terms and Conditions. No agencies may place purchase orders against the Contract beyond the expiration date unless DAS renews the Contract by amendment. The Contractor may begin performance under the Contract only upon receipt of a valid order from a participating agency.

INSTRUCTIONS TO BIDDERS AND CONTRACT TERMS AND CONDITIONS, Revised 10/2013, are a part of this Invitation to Bid. Copies may be downloaded by clicking the link above. All prior versions of Instructions to Bidders, Contract Terms and Conditions are null and void.

By submitting this Invitation to Bid, the Contractor certifies that Contractor has truthfully disclosed the location(s) where all services are to be performed; the location(s) where all applicable State contract data is to be maintained or made available; and the principal location of business for the Contractor and all subcontractors. The Contractor further certifies and acknowledges that Contractor will not change the country of the location(s) where services are performed and will not change the country of the location(s) where data is maintained or made available without prior written consent of the State.

INQUIRIES: All inquiries should be submitted a minimum of five (5) working days prior to the bid opening date through the Procurement website, www.procure.ohio.gov. Click "Find it Fast," select "Doc/Bid/Schedule#" in Step 1, enter the Bid Number in Step 2, click "Find it Fast." The "Submit Inquiry" button is at the bottom of the Opportunity Detail page. Bidders will not receive a personalized e-mail response to their question, nor will they receive notification when the question is answered. Responses may be viewed by clicking the "View Q & A" button located beneath the "Submit Inquiry" button.

	AUTHORIZED SIGNATURE (ORIGINAL SIGNATURE ONLY) (Please sign in blue ink)	DATE

The ORIGINAL signed Bid must be submitted to the Office of Procurement Services by 1:00 o'clock p.m., on the above listed opening date to receive consideration for award. It is requested that the Bidder NOT sign their bid in BLACK ink. BIDDER CERTIFIES, by signature affixed to its bid, that the information provided by it in its bid including the certified statements, is accurate and complete. Bidder declares to have read and understood and agrees to be bound by all of the instructions, terms, conditions and specifications of this Invitation to Bid and agrees to fulfill the requirements of any awarded contract at the prices bid.

CERTIFICATION STATEMENTS

I. **DOMESTIC AND/OR OHIO PREFERENCE**: Bidders claiming preference for Domestic Source End Products and/or the Ohio preference, pursuant to Revised Code Sections 125.09 and 125.11 and Administrative Code Section 123:5-1-06 must complete the following information. **Any bidder who intentionally submits false or misleading information in an attempt to receive a bid preference will be immediately disqualified and may be subject to legal action up to and including debarment.** Bidders who qualify as an "Ohio" bidder (offer an Ohio product or who have significant Ohio economic presence) or who qualify as a Border State bidder are eligible to receive a five percent (5%) preference over non-Ohio/Border state bidders. The state reserves the right to clarify any information during the evaluation process. **BIDDERS MUST COMPLETE THIS CERTIFICATION TO RECEIVE THE PREFERENCE.**

A. DOMESTIC PREFERENCE (BUY AMERICAN): [Not applicable to "Excepted Products"]

1. Where is each product/services being offered mined, raised, grown, produced or manufactured?
   ☐ United States: _____(State) ☐ Canada ☐ Mexico (Go to B-1)
   ☐ Other: (Specify Country)_____ (Go to A-2)

2. End product is manufactured outside the United States and at least 50% of the cost of its components are produced, mined, raised, grown or manufactured within the United States. The cost of components may include transportation costs to the place of manufacture and, in the case of components of foreign origin, duty whether or not a duty free entry certificate is issued.
   ☐ Yes (Go to Section B-1) ☐ No (Go to Section A-3)

3. The Bidder hereby certifies that each end product, except the products listed below, is a domestic source end product as defined in the Buy American Act and that components of unknown origin have been considered to have been mined, produced, grown or manufactured outside the United States.

   _____(Item) _____(Country of Origin)

   _____(Item) _____(Country of Origin)

A domestic end source product is deemed to be excessively priced if it exceeds the cost of the foreign product by more than 6%. Pursuant to FAR, Part 25, the state of Ohio does not acquire supplies or services that cannot be imported lawfully into the United States. The contractor, their subcontractor(s) and any agent of the contractor or subcontractor must not acquire any supplies or services originating from sources within, or that were located in or transported from or through Cuba, Iran, Iraq, Libya, North Korea, Sudan Territory of Afghanistan controlled by the Taliban, or Serbia (excluding the territory of Kosovo).

B. OHIO PREFERENCE (BUY OHIO):

1. The products/services being offered are raised, grown, produced, mined or manufactured in Ohio.
   ☐ Yes (Go to C) ☐ No (Go to B-2)

2. Bidder has significant economic presence within the state of Ohio.
   ☐ Yes (Answer a, b, c, d below) ☐ No (Go to B-3)
   a) Bidder has paid the required taxes due the state of Ohio ☐ Yes ☐ No
   b) Bidder is registered with the Ohio Secretary of State
      ☐ Yes (Charter/Registration No.: _____) ☐ No
      Questions regarding registration should be directed to (614) 466-3910 or visit their web site at: http://www.sos.state.oh.us/
   c) Bidder has ten or more employees based in Ohio or border state. ☐Yes ☐ No (Go to B-2d)
   d) Bidder has seventy-five percent or more employees based in Ohio or border state.
      ☐ Yes ☐ No (Go to B-3)

3. Border state bidder:
   ☐ Yes (Specify which state then go to B-2c): ☐ KY ☐ MI ☐ NY ☐ PA ☐ IN ☐ No (Go to B-4)

4. Border state bidder: mined products mined in respective border state ☐ Yes ☐ No ☐ Not Applicable

II. **E.D.G.E. DESIGNATION:** Is the bidder a certified E.D.G.E. business ☐ Yes ☐ No

For information on E.D.G.E. designation, please visit the DAS Equal Opportunity Division website at: http://www.das.ohio.gov/Divisions/EqualOpportunity/tabid/80/Default.aspx

III. **INDEPENDENT CONTRACTOR ACKNOWLEDGEMENT:** Contractor certifies that Contractor is a "**business** entity" as that term is defined in O.R.C. Section 145.037. See SUPPLEMENTAL CONTRACT TERMS AND CONDITIONS, S-21. Independent Contractor Acknowledgement.

Bidder is defined as a business entity ☐ Yes ☐ No

AMENDMENTS TO CONTRACT TERMS AND CONDITIONS: The following Amendments to the Contract Terms and Conditions do hereby become a part hereof. In the event that an amendment conflicts with the Contract Terms and Conditions, the Amendment will prevail.

DELIVERY AND ACCEPTANCE: Supplies will be delivered to the participating agency within thirty (30) days after receipt of order and, in accordance with paragraphs S-8, S-9, and S-10 of the SUPPLEMENTAL CONTRACT TERMS AND CONDITIONS. The delivery location will be noted on the purchase order issued by the participating agency. Acceptance (transfer of title) will occur upon the inspection and written confirmation by the ordering agency that the supplies delivered conform to the requirements set forth in the Contract. Unless otherwise provided in the Contract, acceptance shall be conclusive except as regards to latent defects, fraud, or such gross mistakes as amount to fraud. All damaged items received shall be noted on the driver's Bill of Lading, placed back on the truck, and returned to the Contractor for prompt replacement. Deliveries shall be accepted from 8:00 a.m. – 11:00 a.m. and 12:30 p.m. – 2:30 p.m., Monday through Friday, excluding State holidays. Please contact Mr. Darrell Hallam at (470) 852-9777 ext. 2420, darrell.hallam@odrc.state.oh.us prior to delivery for instructions and authorization.

MINIMUM ORDER: No order shall be placed against a Contract awarded pursuant to this Bid for less than twenty-five ($25.00) dollars. The minimum dollar value of any order placed against a Contract awarded pursuant to this Bid for delivery F.O.B. destination, transportation charges prepaid, at any one time to one destination, shall not be less than three hundred ($300.00) dollars.

ON ORDERS TOTALING LESS THAN THREE HUNDRED ($300.00) DOLLARS: Transportation charges shall be handled in accordance with Article S-10 of Supplemental Contract Terms and Conditions.

DESCRIPTIVE LITERATURE: The Bidder may be required to submit descriptive literature of the supplies or services being offered. If requested, the literature will be used in the evaluation process to determine the lowest responsive and responsible Bidder. If not provided as part of the Bid Response, the Bidder must provide said literature within ten (10) calendar days after request/notification by the Office of State Purchasing to do so. Any references, that may appear in the descriptive literature, that may alter the terms and conditions and specifications of the Bid (i.e. F.O.B. Shipping Point or Prices Subject to Change), will not be part of any Contract and will be disregarded by the State of Ohio. Failure of the Bidder to furnish descriptive literature either as part of their Bid Response or within the time specified herein will deem the Bidder not responsive.

CONTRACT AWARD: The Contract will be awarded to the lowest responsive and responsible Bidder by low lot total.

EVALUATION: Bids will be evaluated in accordance with Article I-17 of the “Instructions to Bidders”. In addition, the State will: Multiply the Unit Price per Linear Foot by the Estimated Annual Usage listed in the Bid and then add each of the Totals together to arrive at an Annual Total for all Items. In the case where Estimated Annual Usage is unknown, the State will substitute 100,000 Linear Feet as the Multiplier. Failure to Bid all items will result in the Bidder being deemed not responsive.

FIXED-PRICE WITH ECONOMIC ADJUSTMENT: The Contract prices(s) will remain firm for the first six (6) months duration of the Contract. Thereafter, the Contractor may submit a request to increase their price(s) to be effective thirty (30) calendar days after acceptance by DAS. No price adjustment will be permitted prior to the effective date of the increase received by the Contractor from his suppliers, or on purchase orders that are already being processed, or on purchase orders that have been filled and are awaiting shipment. If the Contractor receives orders requiring quarterly delivery, the increase will apply to all deliveries made after the effective date of the price increase.

The price increase must be supported by a general price increase in the cost of the finished supplies, due to increases in the cost of raw materials, labor, freight, Workers' Compensation and/or Unemployment Insurance, etc. Detailed documentation, to include a comparison list of the Contract items and proposed price increases, must be submitted to support the requested increase. Supportive documentation should include, but is not limited to: copies of the old and the current price lists or similar documents which indicate the original base cost of the product to the Contractor and the corresponding increase, and/or copies of correspondence sent by the Contractor's supplier on the supplier's letterhead, which contain the above price information and explains the source of the increase in such areas as raw materials, freight, fuel or labor, etc.

Should there be a decrease in the cost of the finished product due to a general decline in the market or some other factor, the Contractor is responsible to notify DAS immediately. The price decrease adjustment will be incorporated into the Contract and will be effective on all purchase orders issued after the effective date of the decrease. If the price decrease is a temporary decrease, such should be noted on the invoice. In the event that the temporary decrease is revoked, the Contract pricing will be returned to the pricing in effect prior to the temporary decrease. For quarterly deliveries, any decrease will be applied to deliveries made after the effective date of the decrease. Failure to comply with this provision will be considered as a default and will be subject to I.C. “Termination / Suspension” and Provision II. of the “Contract Remedies:” of the “Standard Contract Terms and Conditions”.

USAGE REPORTS: Every six (6) months the Contractor must submit a report (written or on disk) indicating sales generated by this Contract. The report shall list usage by customer, by line item, showing the quantities/dollars generated by this Contract. The report shall be forwarded to the Office of State Purchasing, 4200 Surface Road, Columbus, OH 43228-1395, Attn: Senthan Mahendrarasa.

THE REMAINDER OF THIS PAGE IS INTENTIONALLY LEFT BLANK

SPECIFICATION

I. SCOPE, CLASSIFICATION AND TESTING:

A. Scope: The purpose of this Contract is to obtain heavy duty Plastic Bag Film Material for the Ohio Penal Industries. The plastic film purchased as a result of this Bid award will be utilized to produce trash bags for use in an office environment as well as FDA-approved poly bags for use in the meat processing career center. Material offered must be compatible with the Plascon Model BSM 1300 Plastic Bag Machine(see Exhibit A).

B. Classification:

1. Star and Gusset Tubular HD/LLDPE Material

2. Gusset Tubular LLD FDA Material

3. Star Clear Seal Tubular HDPE Material
   a. 24” wide +/- ½” tolerance
   b. 0.23 mil (6 microns)
   c. Finished bag will be required to hold up to 10 gallons of office material

4. Star Clear Seal Tubular HDPE Material
   a. 33” wide +/- ½” tolerance
   b. 0.31 mil (8 microns)
   c. Finished bag will be required to hold up to 33 gallons of office material

5. Star Clear Seal Tubular LLDPE Material
   a. 24” wide +/- ½” tolerance
   b. 0.23 mil (6 microns)
   c. Finished bag will be required to hold up to 10 gallons of office material

6. Star Clear Seal Tubular LLDPE Material
   a. 33” wide +/- ½” tolerance
   b. 0.31 mil (8 microns)
   c. Finished bag will be required to hold up to 33 gallons of office material

7. Flat Black Seal Tubular LLD FDA Material
   a. 34” wide +/- ½” tolerance
   b. 2.0 mil
   c. Finished bag will be required to hold up to 40 gallons of office material

8. Flat Black Seal Tubular LLDPE Material
   a. 34” wide +/- ½” tolerance
   b. 3.0 mil
   c. Finished bag will be required to hold up to 40 gallons of office material

C. Testing: The latest revision of the American Society for Testing and Materials (ASTM) Standards, shall be applied as standards on the items listed in this Bid document. http://www.astm.org,

II. REQUIREMENTS:

A. Star and Gusset Tubular HD/LLDPE Material

1. Film/Tubing, Clear/Natural, conforming to all ASTM Testing for Impact, Tensile, Elongation and Tear

2. Blend of High Density and Linear Low Density Polyethylene resins, HD/LLDPE, No Gauge Banding

3. Specified MIL shall be within ± 10% variance of actual gauge across the web

4. 5-10% Recycled Material

5. Core Diameter – 3”

6. Roll Diameter minimum 22”, maximum 34”

7. Maximum weight – 325 lbs

B. Gusset Tubular LLD FDA Material

1. Clear Gusset, Linear Low Density Polyethylene (LLDPE), conforming to all ASTM Testing for Impact, Tensile, Elongation and Tear

2. Food Grade, Federal Drug Administration (FDA) – Approved. Certificate of compliance required with Bid submission

3. No Post-Consumer Material

4. Specified MIL shall be within ± 10% variance of actual gauge across the web

5. Core Diameter – 3”

6. Roll Diameter minimum 22”, maximum 34”

7. 2.0 and 1.5 MIL to meet all specifications and requirements of Federal Drug Administration Code of Federal Regulations (FDA CFR) 174.5, 177.1520 of Title 21

8. Complies with Federal Food, Drug, and Cosmetic Act (FFDCA) requirements and all related regulations

C. Star Clear Seal Tubular HDPE (mandatory items 1 and 2) and LLDPE (optional items 3 and 4) Material

1. Film/Tubing, Clear/Natural, conforming to all ASTM Testing for Impact, Tensile, Elongation and Tear

2. High Density Polyethylene (HDPE) (mandatory items 1 and 2) and Linear Low Density Polyethylene resin (LLDPE) (optional items 3 and 4), No Gauge Banding

3. Specified MIL shall be within ± 10% variance of actual gauge across the web.

4. Recycled Material is allowed, however the percentage of recycled material must not be such that it prevents the film from passing the required specifications and ASTM testing methods. Film containing recycled material must still be suitable for its intended purpose as indicated in these specifications.

5. Core Diameter – 3”

6. Roll Diameter minimum 22”, maximum 34”

7. Maximum weight – 325 lbs

8. Material offered must be compatible with the Plascon Model BSM 1300 Plastic Bag Machine (see Exhibit A for additional information on this machine).

III. <u>SUITABILITY FOR INTENDED PURPOSE:</u>

As stated in the preceding paragraphs these plastic bags are intended to hold office material trash up to 10 gallons for the 24” film and up to 33 gallons for the 33” film per finished bag. The film must meet or exceed these specifications and the intended purpose. If the film should fail to meet their intended purpose they may be subject to the following tests:

A. Tensile strength and Elongation testing shall be done in accordance with ASTM.

B. Impact resistance testing of plastic film shall be done in accordance with ASTM.

C. Tear resistance testing of plastic film shall be done in accordance with ASTM.

D. Standard specification for polyethylene film and sheeting - plastic material shall conform to ASTM.

E. The Contractor is responsible for arranging and paying for the test as part of the quality process. The Contractor must provide Material Test results upon request.

IV. MATERIAL SHORTAGES:

The awarded Contractor will be required to work with OPI to establish a mutually agreed upon validation process for verifying material roll lengths. If there is a discrepancy in the actual roll length in the shipped versus the billed roll length, the Contractor will work with the Agency to reach a mutual agreement. If an agreement cannot be reached the Office of Procurement Services will make the final decision.

V. PRODUCT SAMPLES:

The Bidder(s) may be required to submit samples of the supplies being offered. The samples will be used in the evaluation process to determine the lowest responsive and responsible Bidder. If not included as part of their Bid Response, the Bidder will be required to provide the samples within ten (10) calendar days after notification. Failure to provide the samples within the stated time period will result in the Bidder being deemed not responsive. After award of the Contract, the samples will be used as a basis of comparison with actual product delivered under Contract. Any variation between the samples and product being delivered will be considered as an event of default. Any variations between the samples and actual product being delivered that are due to manufacturer changes may be acceptable and shall require prior written approval from DAS.

With their Bid, the Bidder(s) may be asked to provide product samples. The Bidder(s) must provide samples for all items listed on pages (8-10), Item Numbers 1-23.

A. Samples must be in the form of a bag as intended for use with this document.

B. Printing must be on the bag so that the agency can get a visual of how the printing will look.

THE REMAINDER OF THIS PAGE IS INTENTIONALLY LEFT BLANK

PRICE SCHEDULE

ITEM NO.	ESTIMATED ANNUAL USAGE (LF)	ITEM	UNIT COST PER LINEAR FOOT	TOTAL COST
1	2,300,000	Star HD/LLDPE Tubular, Actual Gauge .5 MIL, Film Width 24", Roll Width 6", Clear/Natural LF per roll:_____ Weight per roll:_____	$ /LF.	$
2	1,200,000	Star HD/LLDPE Tubular, Actual Gauge .7 MIL, Film Width 33", Roll Width 8.25", Clear/Natural LF per roll:_____ Weight per roll:_____	$ /LF.	$
3	1,100,000	Star HD/LLDPE Tubular, Actual Gauge 1.5MIL, Film Width 38", Roll Width 9.5", Clear/Natural LF per roll:_____ Weight per roll:_____	$ /LF.	$
4	4,500,000	Star HD/LLDPE Tubular, Actual Gauge .9 MIL, Film Width 38", Roll Width 9.5", Clear/Natural LF per roll:_____ Weight per roll:_____	$ /LF.	$
5	2,500,000	Star HD/LLDPE Tubular, Actual Gauge .9 MIL, Film Width 44", Roll Width 11", Clear/Natural LF per roll:_____ Weight per roll:_____	$ /LF.	$
6	500,000	Gusset, Clear, Tubular Polyethylene HD/LLDPE, .5 MIL, 19" W x 8" Gusset, for Milk Crate Liner LF per roll:_____ Weight per roll:_____	$ /LF.	$
7	175,000	Gusset, Clear, Tubular Polyethylene LLDPE, 2.0 MIL, 9" W x 5" Gusset, FDA Approved w/Certificate LF per roll:_____ Weight per roll:_____	$ /LF.	$
8	175,000	Gusset, Clear, Tubular Polyethylene LLDPE, 1.5 MIL, 22" W x 14" Gusset, FDA Approved w/Certificate LF per roll:_____ Weight per roll:_____	$ /LF.	$

PRICE SCHEDULE cont.

ITEM NO.	ESTIMATED ANNUAL USAGE (LF)	ITEM	UNIT COST PER LINEAR FOOT	TOTAL COST
9	3,200,000	Star HDPE Tubular, Actual Gauge .23 MIL (6 Microns), Film Width 24" (+/- ½"), Roll Width 6", Clear/Natural LF per roll:_____ Weight per roll:_____	$ /LF.	$
10	2,500,000	Star HDPE Tubular, Actual Gauge .31 MIL (8 Microns), Film Width 33" (+/- ½"), Roll Width 8.25",Clear/Natural LF per roll:_____ Weight per roll:_____	$ /LF.	$
11	100,000	Star Tubular Biodegradable Material, Actual Gauge .5 MIL, Film Width 24", Roll Width 6" LF per roll:_____ Weight per roll:_____	$ /LF.	$
12	100,000	Gusset Tubular Biodegradable Material, FDA Approved, Actual Gauge .5 MIL, Film Width 19", Roll Width 19", Gusset 8" LF per roll:_____ Weight per roll:_____	$ /LF.	$
13	100,000	Star Seal Tubular Colored (All Primary Colors), HD/LLDPE Material, Actual Gauge .5, Film Width 24", Roll Width 6" LF per roll:_____ Weight per roll:_____	$ /LF.	$
14	100,000	Star Seal Tubular Colored (All Primary Colors), HD/LLDPE Material, Actual Gauge 1.5 MIL, Film Width 38", Roll Width 6" LF per roll:_____ Weight per roll:_____	$ /LF.	$
15	100,000	Star Tubular Biodegradable Material, Actual Gauge .7 MIL, Film Width 33", Roll Width 8.25" LF per roll:_____ Weight per roll:_____	$ /LF.	$
16	100,000	Gusset Tubular Biodegradable Material, FDA Approved, Actual Gauge 2.0 MIL, Film Width 9", Roll Width 9",Gusset 5" LF per roll:_____ Weight per roll:_____	$ /LF.	$

PRICE SCHEDULE cont.

ITEM NO.	ESTIMATED ANNUAL USAGE (LF)	ITEM	UNIT COST PER LINEAR FOOT	TOTAL COST
17	100,000	Star Tubular Biodegradable Material, Actual Gauge 1.5 MIL, Film Width 38", Roll Width 9.5" LF per roll:_____ Weight per roll:_____	$ /LF.	$
18	100,000	Gusset Tubular Biodegradable Material, FDA Approved, Actual Gauge 1.5 MIL, Film Width 22" , Roll Width 22",Gusset 14" LF per roll:_____ Weight per roll:_____	$ /LF.	$
19	100,000	Star Seal Tubular Colored (All Primary Colors) HD/LLDPE Material Biodegradable, Actual Gauge .7 MIL, Film Width 33" , Roll Width 8.25" LF per roll:_____ Weight per roll:_____	$ /LF.	$
20	100,000	Star LLDPE Tubular, Actual Gauge .23 MIL(6 Microns), Film Width 24"(+/-1/2"), Roll Width 6", Clear/Natural LF per roll:_____ Weight per roll:_____	$ /LF.	$
21	100,000	Star LLDPE Tubular, Actual Gauge .31 MIL(8 Microns), Film Width 33"(+/-1/2"), Roll Width 8.25", Clear/Natural LF per roll:_____ Weight per roll:_____	$ /LF.	$
22	100,000	Flat Black Seal Tubular, Actual Gauge 2.0 MIL, Film Width 34" (+/- ½"), Roll Width 34", Black LF per roll:_____ Weight per roll:_____	$ /LF.	$
23	100,000	Flat Black Seal Tubular, Actual Gauge 2.0 MIL, Film Width 34" (+/- ½"), Roll Width 34", Black LF per roll:_____ Weight per roll:_____	$ /LF.	$
Annual Total				$

Product(s) contains recycled material: Yes ____ No _____, If yes, _____%

CONTRACTOR DISCLOSURE CERTIFICATION

DISCLOSURE OF SUBCONTRACTORS / JOINT VENTURES (See Standard Contract Terms and Conditions, Section (roman numeral) V. General Provisions:, Paragraph Q.,):
List names of subcontractors who will be performing work under the Contract.

_____ _____

_____ _____

_____ _____

By the signature affixed to Page 1 of this Bid, Bidder hereby certifies that the above information is true and accurate. The Bidder agrees that no changes will be made to this list of subcontractors or locations where work will be performed or data will be stored without prior written approval of DAS. Any attempt by the Bidder/Contractor to change or otherwise alter subcontractors or locations where work will be performed or locations where data will be stored, without prior written approval of DAS, will be deemed as a default. If a default should occur, DAS will seek all legal remedies as set forth in the Terms and Conditions which may include immediate cancellation of the Contract. Failure to complete this page may deem your bid not responsive.

EXHIBIT A – FOR REFERENCE ONLY

BSM US

3.1 Technical Data/Connection Values

	BSM 1000	**BSM1300**
Performance data		
Working width	up to 1000mm / 39"	up to 1300mm / 51"
Bag length (in 1 mm steps)	120mm to 2500mm / 5"-98"	120mm to 2500mm /5"-98"
Working cycle	max. 200 per min	max. 160 per min
Foil web speed	max. 100 m/min / 328ft/min	max. 100 m/min / 328ft/min
Feed roller drive	Servomotor	Servomotor
Welding bar drive	AC Frequency motor	AC Frequency motor
Length control	Digital	Digital
Welding principle	Impulse – Ropex sytem	Impulse – Ropex system
Weights and Dimensions		
Total weight	approx. 1500 kg / 3300lbs	approx. 1500 kg / 3300lbs
Length	approx. 5275 mm / 17'-4"	approx. 5275 mm /17'-4"
Width	approx. 1982 mm / 7'-1"	approx. 2324 mm / 7'-8"
Height	approx. 1174 mm / 3'-10"	approx. 1174 mm / 3'-10"
Electric power, Air, Water		
Connecting voltage	240V, 3Phase/N, PE, 60Hz	240V, 3Phase/N, PE,60Hz
Standard Power consumption without accessories	30Amps	30Amps
Max. pre-fuse	50A	50A
Compressed air connection	flexible tube (12 mm I.D.)(1/2")	flexible tube (12 mm I.D.)(1/2")
Air pressure	6 bar / 90Psi	6 bar /90Psi
Air consumption	max. 300 l/min / 10ft³ /min	max. 400 l/min / 14ft³ /min
Environmental data		
Noise level		
Electrical Design and Safety		
CE / UL-CSA		

EXHIBIT A – FOR REFERENCE ONLY (cont.)

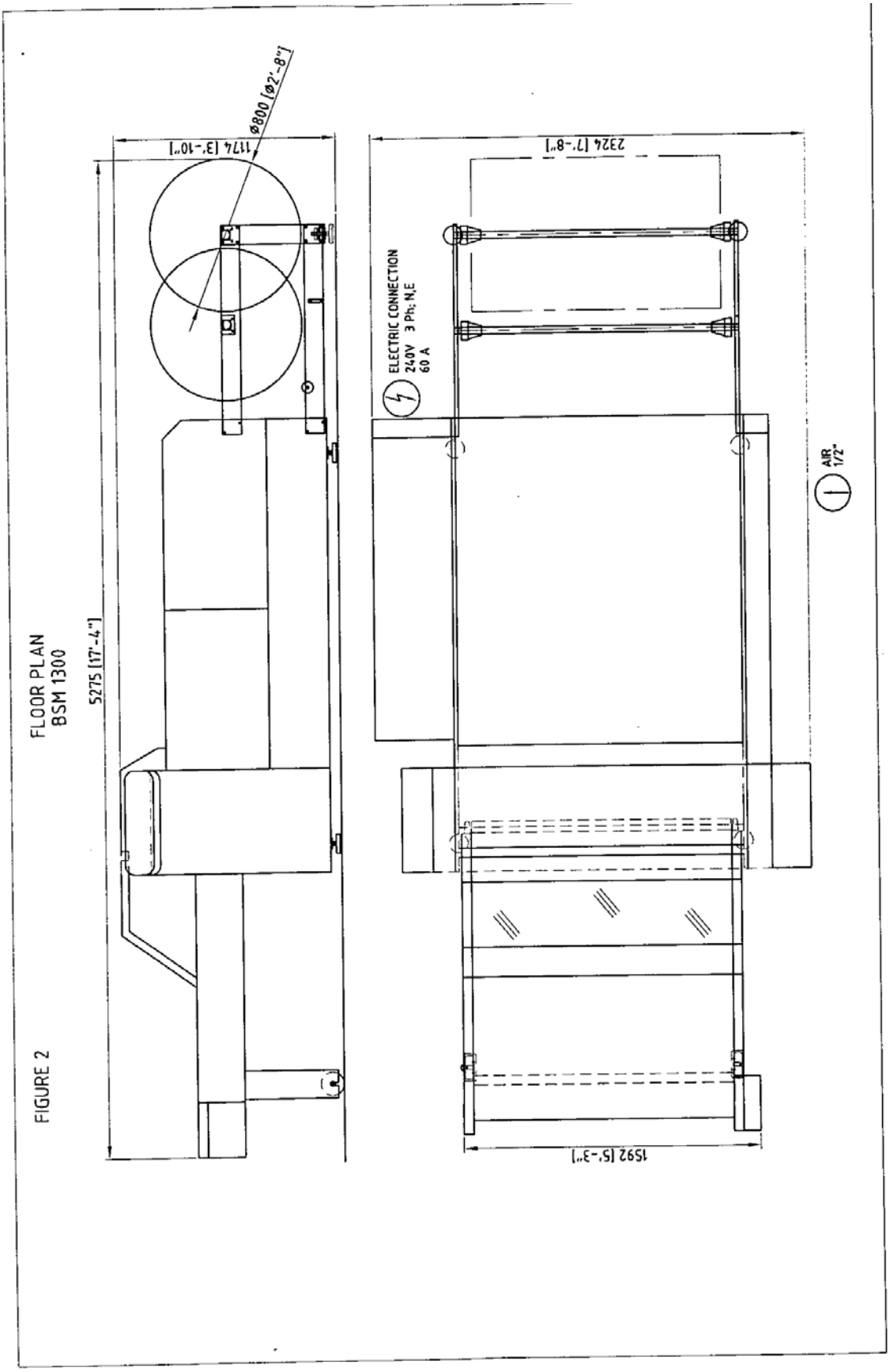

FIGURE 2
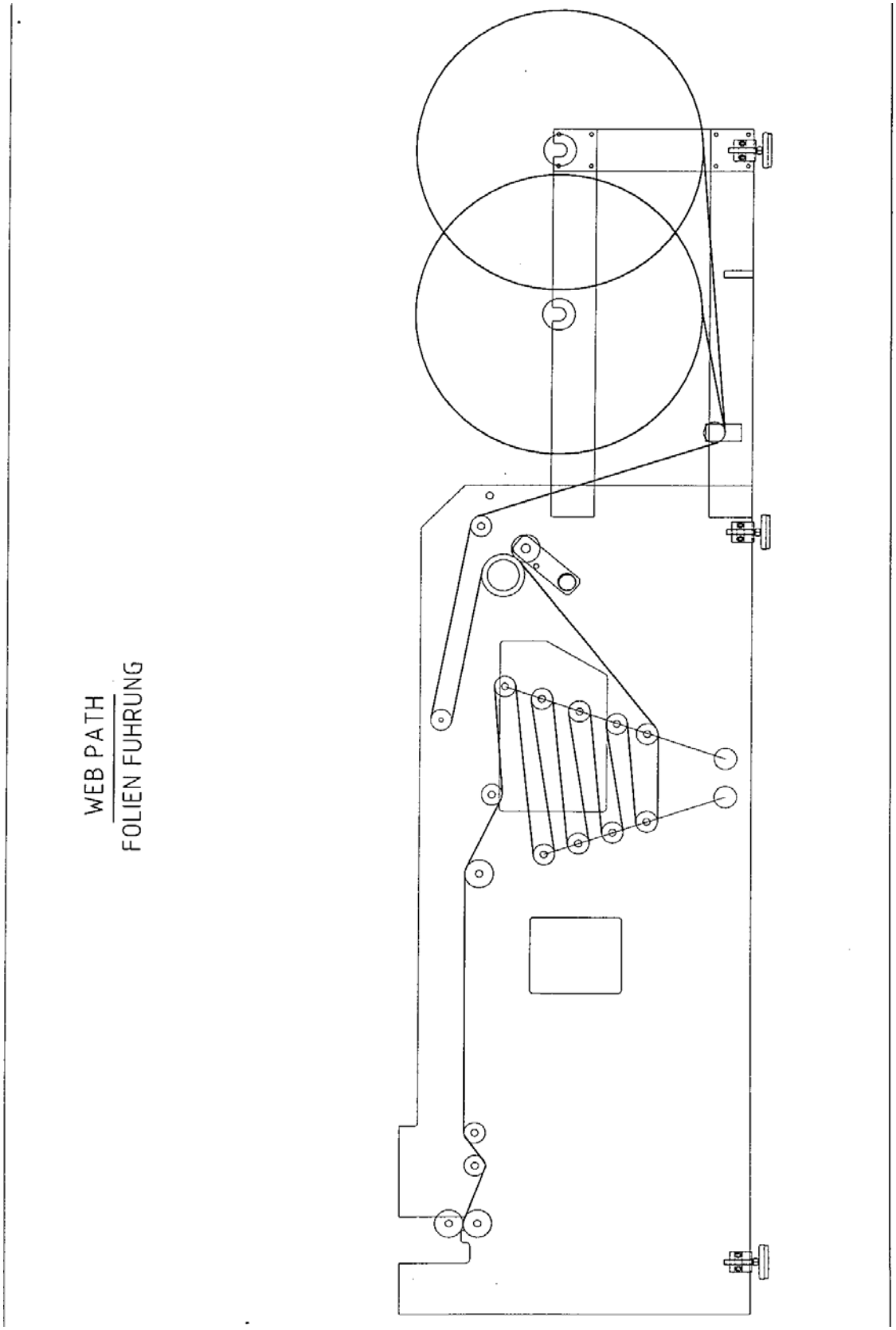
EXHIBIT A – FOR REFERENCE ONLY (cont.)