SUMMIT

Fire Apparatus and Custom Fabricators

Custom Design Is Our Specialty, Quality Is Our Commitment!

Custom Built To Our Customers Specific Needs!

Ohio S T S contract number

_____

Including Repairs and Refurbishing To Your Current Apparatus For Longer Cost Effective Service Life.

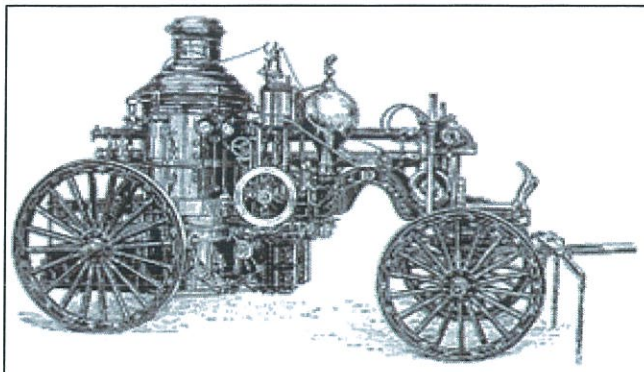

The History of Summit Fire Apparatus

Charles Messmer started the company under the name of Summit Welding and Fabricating in 1957. Using his experience in fabricating and being a founding father and fire chief of the local fire department, Charles constructed the first fire unit, a Tanker, later that same year.

Two of Charles's sons immediately followed in their father's footsteps and came to work at Summit after school. Joe and Tom Messmer began learning the trade of welding and fabricating from their father and assumed current ownership after Charlie's passing in 1969.

In 1975, Summit Welding and Fabricating became Summit Fire Apparatus with the emphasis as a refurbishment shop of fire apparatus. Over the years Summit and their employees gained experience and knowledge from repairing and refurbishing other manufacturer's apparatus. Joe Messmer, President and Tom Messmer, Vice President had made the decision to change the mission of Summit Fire Apparatus from a refurbishment shop to apparatus manufacturer in 1980.

In 1994, Summit more than doubled its Edgewood, Kentucky plant from 14,500 sq. ft. to a 31,000 state of the art facility. Through computer aided technology and firefighter experienced management, Summit has developed a line of apparatus that includes Pumpers, Tankers, Rescue Trucks, Brush Trucks and specialty units such as our Haz-Mat Rescue and SCBA Refill Air & Light Vehicle.

Today, Summit Fire Apparatus continues its "Commitment to Quality at Affordable Prices" on every apparatus built.

SUMMIT

Fire Apparatus and Custom Fabricators

SUMMIT

Fire Apparatus and Custom Fabricators

REMOTE EVACUATION & DEPLOYMENT

R.E.D. WAGON

TRAIL WILDLAND & OFF-ROAD

T.W.O.

Our newest version of the R.E.D. Wagon is the same width as a RTV for ease in maneuvering. Inward facing seats protect passengers from trees and brush. Same aggressive tires, stable ride, seating for 6. Same Summit quality and spirit of cooperation. Joe, Erich or Mark will be happy to discuss all the possibilities

CUSTOM DESIGN IS OUR SPECIALTY, QUALITY IS OUR COMMITMENT!

11 Sperti Drive Edgewood, KY 41017 (859) 331-0360 www.SummitFireApparatus.com

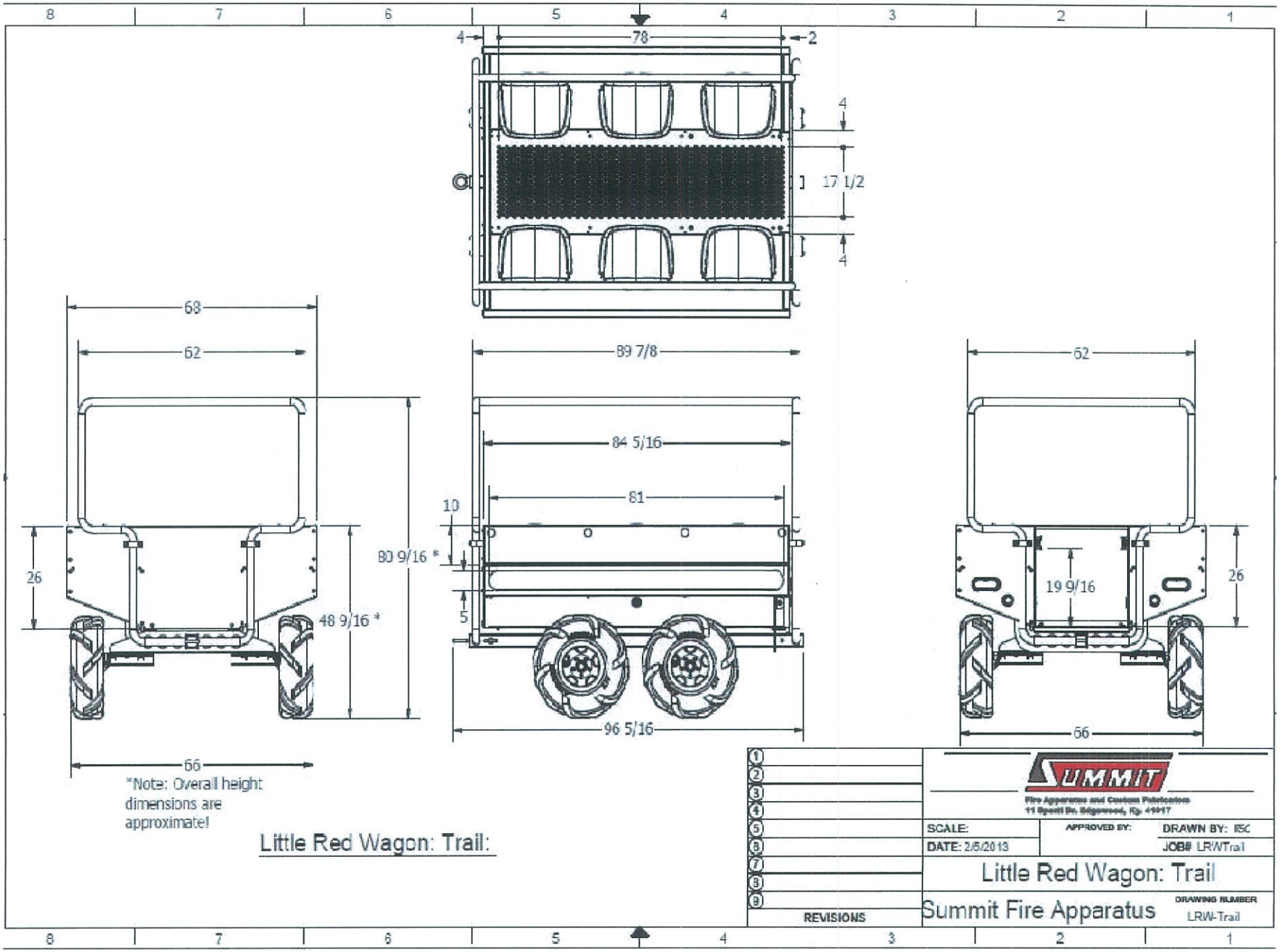
4
78
2
4
17 1/2
4
68
62
89 7/8
84 5/16
81
10
80 9/16 *
26
48 9/16 *
5
96 5/16
66
62
19 9/16
26
66
*Note: Overall height dimensions are approximate!
Little Red Wagon: Trail:
SUMMIT
Fire Apparatus and Custom Fabrication
SCALE:
APPROVED BY:
DRAWN BY: ISC
DATE: 2/5/2013
JOB# LRWTrail
Little Red Wagon: Trail
Summit Fire Apparatus
DRAWING NUMBER
LRW-Trail
REVISIONS

SUMMIT
Fire Apparatus and Custom Fabricators

DESCRIPTION	QTY	PRICE	STD. OPT	INCLUDED OPT.
REMOTE EVACUATION & DEPLOYMENT TRAILER T.W.O. (TRAIL, WILDLAND, OFFROAD)		$8,000.00		
DIMENSIONS:				
Dimensions stored: 96"L x 80"H x 68"W				
Dimensions in use: 134L x 80"H x 68"W				
Dimensions Storage: 84"L x 7.5"H x 20.5" W				
Weight: 790 Lbs				
Capacities: 1500lbs / 6 people				
Requirements: Side by Side UTV, RTV With 1500 Lb Towing Capacity Units To Be UpFitted With Electric Brake Controller				
CHASSIS FEATURES:				
Heavy Duty HRS Formed Steel & Tubular Chassis	1			
Chassis Tested To Support 3000lbs	1			
Trailer Hitch -Retractable Pintle Style Draw Bar	1			
Chassis Painted Black Enamel	1			
Polymer Isolation Strips - Chassis Frame	1			
Four (4) Flex Ride 1400 Half Axles	4			
Four (4) 5 Bolt Axle Hub Assemblies	4			
Two (2) Axle hubs with 7" Electric Drum Brakes	2			
Four (4) Aluminum 12" ATV wheels	4			
Four (4) Aggressive Tread (trail) 12" ATV Tires	4			
BODY:				
Body Construction Formed 5052 .160" Aluminum (tub)	1			
Body Style - 6 Passenger Interior Seating With Rear Entry/Exit	1			
Walk In Flooring - Punched Raised Aluminum For Grip And Floor Drainage	1			
Seating Area - Smoooth Aluminum With Seating Provisions For Six	1			
Storage - Two (2) 12 CuFt Storage Compartments Under Seats External Access	2			
Paint - Unfinished Aluminum	1			
ELECTRIC:				
Front Bulk Head 4way Trailer Connector	1			
Two (2) Oval LED Brake Lights	2			
Two (2) Rear Facing Ground Lights	2			
Unpainted Finish	1			
Limited Warranty (1-Year)	1			

11 Sperti Drive, Edgewood, KY 41017
(859)331-0360
FAX: (859)331-0399

SUMMIT
Fire Apparatus and Custom Fabricators

DESCRIPTION	QTY	PRICE	STD. OPT	INCLUDED OPT.
REMOTE EVACUATION & DEPLOYMENT TRAILER T.W.O. (TRAIL, WILDLAND, OFFROAD)		$8,000.00		
OPTIONS				
Poly Clam Shell Seats		$475.00		
Padded Poly Clam Shell Seats		$600.00		
Industrial Steel reinforced padded seat		$2,000.00		
Bench Seat - Each		$822.00		
Seat Belts		$260.00		
Passenger Head & Torso Protection Device - Required with Seat & Belt Options		$1,350.00		
Side Storage Access Doors		$550.00		
Rear Access Step		$250.00		
Walk Way lights		$140.00		
Painted Finish - Single color - exterior only (Enamel standard colors)		$675.00		
Painted Finish - Single color - interior & exterior (Enamel standard colors)		$1,000.00		
Rubberized bed liner finish, exterior and interior (black, grey, brown, blue)		$800.00		
Custom color bed liner finish (red,desert tan, green, maroon, bright orange, yellow, purple)		$100.00		
Painted enamel outside finish and inside of body rubberized.		$3,400.00		
Undercoating		$120.00		

11 Sperti Drive, Edgewood, KY 41017
(859)331-0360
FAX: (859)331-0399

SUMMIT
Fire Apparatus and Custom Fabricators

DESCRIPTION	QTY	PRICE	STD. OPT	INCLUDED OPT.
REMOTE EVACUATION & DEPLOYMENT TRAILER T.W.O. (TRAIL, WILDLAND, OFFROAD)		$8,000.00		

11 Sperti Drive, Edgewood, KY 41017
(859)331-0360
FAX: (859)331-0399

SUMMIT

Our experience shows in the details...

NEW DESIGN includes more **safety features** and budget friendly options

REMOTE EVACUATION & DEPLOYMENT

R.E.D. WAGON

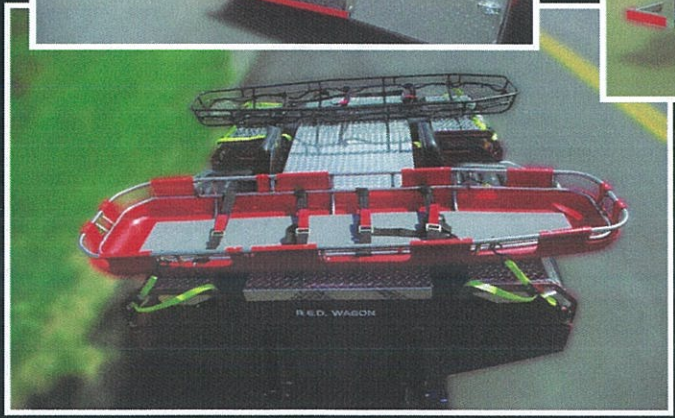

Innumerable on and off-road applications. Customize a unit to fit your needs and situation. Joe, Erich or Mark will be happy to discuss all the possibilities.

(859) 331-0360

www.SummitFireApparatus.com

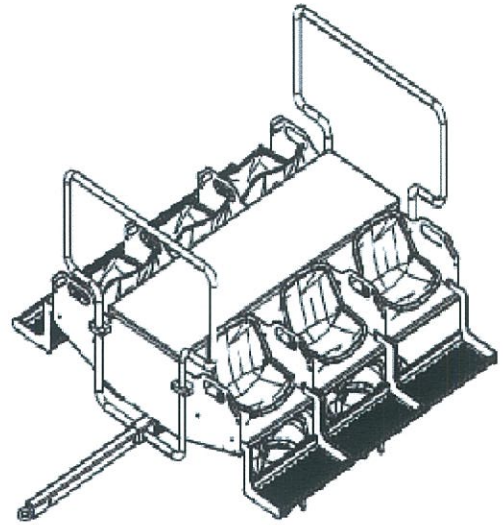

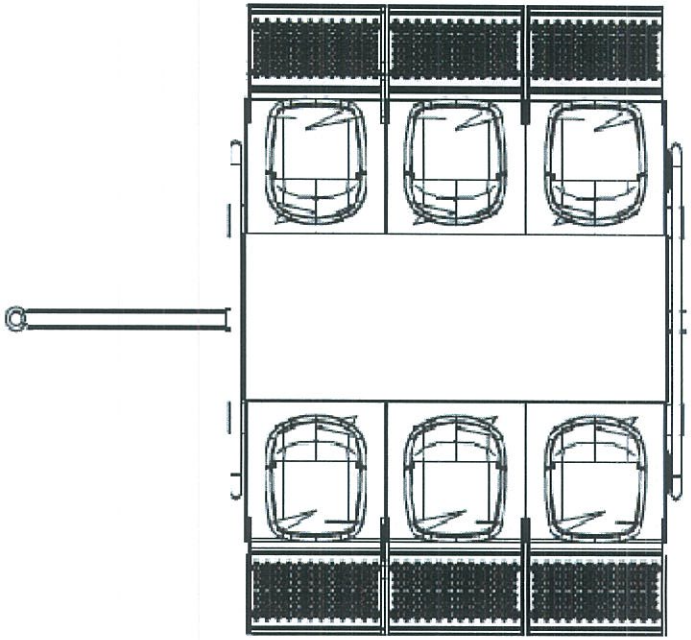

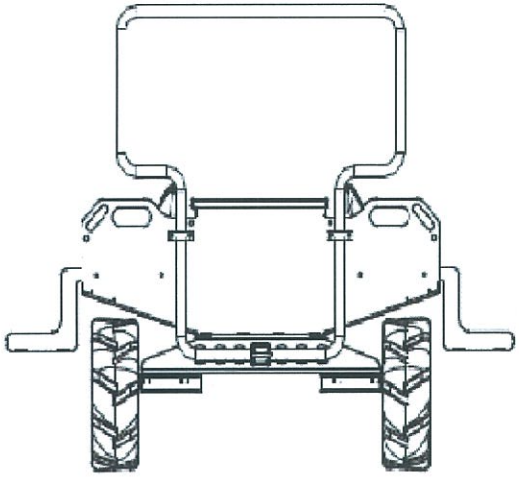

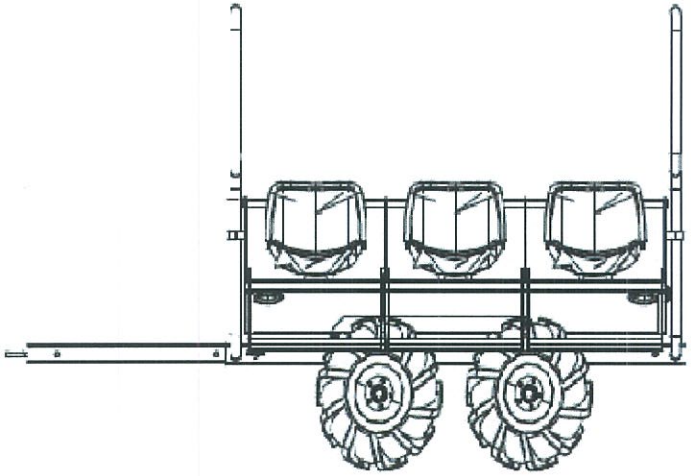

SUMMIT
Fire Apparatus and Custom Fabricators

DESCRIPTION	QTY	PRICE	STD.	INCLUDED OPT.
REMOTE EVACUATION & DEPLOYMENT TRAILER (ORIGINAL)		$9,600.00		
DIMENSIONS:				
Dimensions stored: 96"L x 76"H x 84"W				
Dimensions in use: 134L x 76"H x 102"W				
Dimensions Storage: 84"L x 22"H x 25.5" W				
Weight: 790 Lbs				
Capacities: 1500lbs / 6 people				
Requirements: Side by Side UTV, RTV With 1500 Lb Towing Capacity With Units To Be UpFitted With Electric Brake Controller				
CHASSIS FEATURES:				
Heavy Duty HRS Formed Steel & Tubular Chassis	1			
Chassis Tested To Support 3000lbs	1			
Trailer Hitch -Retractable Pintle Style Draw Bar	1			
Chassis Painted Black Enamel	1			
Polymer Isolation Strips - Chassis Frame	1			
Four (4) Flex Ride 1400 Half Axles	4			
Four (4) 5 Bolt Axle Hub Assemblies	4			
Two (2) Axle hubs with 7" Electric Drum Brakes	2			
Four (4) Aluminum 12" ATV wheels	4			
Four (4) Aggressive Tread (trail) 12" ATV Tires	4			
BODY:				
Body Construction Formed 5052 .160" Aluminum (tub)	1			
Body Style - 6 Passenger Exterior Seating With Center Storage	1			
Seating Area - Smoooth Aluminum With Six Divided Seating Provisions	1			
Eight Hand Hold And Basket Anchor Points	8			
Storage - One 27 CuFt Storage Compartment In Center	1			
Six Folding Foot Rests	6			
Six (6) Poly Clam Shell Style Passenger Seats	6			
Treadplate Aluminum Storage Lid	1			
Paint - Unfinished Aluminum	1			
ELECTRIC:				
Front Bulk Head 4way Trailer Connector	1			
Two (2) Oval LED Brake Lights	2			
Two (2) Rear Facing Ground Lights	2			
Unpainted Finish	1			
Limited Warranty (1-Year)	1			

11 Sperti Drive, Edgewood, KY 41017
(859)331-0360
FAX: (859)331-0399

SUMMIT
Fire Apparatus and Custom Fabricators

DESCRIPTION	QTY	PRICE	STD.	INCLUDED OPT.
REMOTE EVACUATION & DEPLOYMENT TRAILER (ORIGINAL)		$9,600.00		
OPTIONS				
Padded Poly Clam Shell Seats		$600.00		
Industrial Steel reinforced padded seat		$1,575.00		
Seat Belts		$250.00		
Passenger Head & Torso Protection Device - Required with Seat Belt Option		$1,100.00		
Front Access Door		$200.00		
RTA Edition - Logitudunal hand rails; reinforced lid; bed liner coating with rubber grip; second brake pigtail; forward light heads; front access steps		$1,300.00		
Painted Exterior Finish - Single color (Enamel standard colors)		$1,200.00		
Painted Finish - Single color interior & exterior(Enamel standard colors)		$1,450.00		
Rubberized bed liner finish, exterior (black, grey, brown, blue)		$1,098.00		
Custom colors - bed liner finish (red, desert tan, olive green, maroon, bright orange, yellow, purple) ADD		$100.00		
Painted enamel outside finish and inside of body rubberized.		$3,402.00		
Undercoating		$120.00		
Bare aluminum storage access lid		-80		

11 Sperti Drive, Edgewood, KY 41017
(859)331-0360
FAX: (859)331-0399

Fire Apparatus and Custom Fabricators

DESCRIPTION	QTY	PRICE	STD.	INCLUDED OPT.
REMOTE EVACUATION & DEPLOYMENT TRAILER (ORIGINAL)		$9,600.00		

11 Sperti Drive, Edgewood, KY 41017
(859)331-0360
FAX: (859)331-0399

SUMMIT

Fire Apparatus and Custom Fabricators

CUSTOM DESIGN IS OUR SPECIALTY, QUALITY IS OUR COMMITMENT!

11 Sperti Drive Edgewood, KY 41017 (859) 331-0360 www.SummitFireApparatus.com

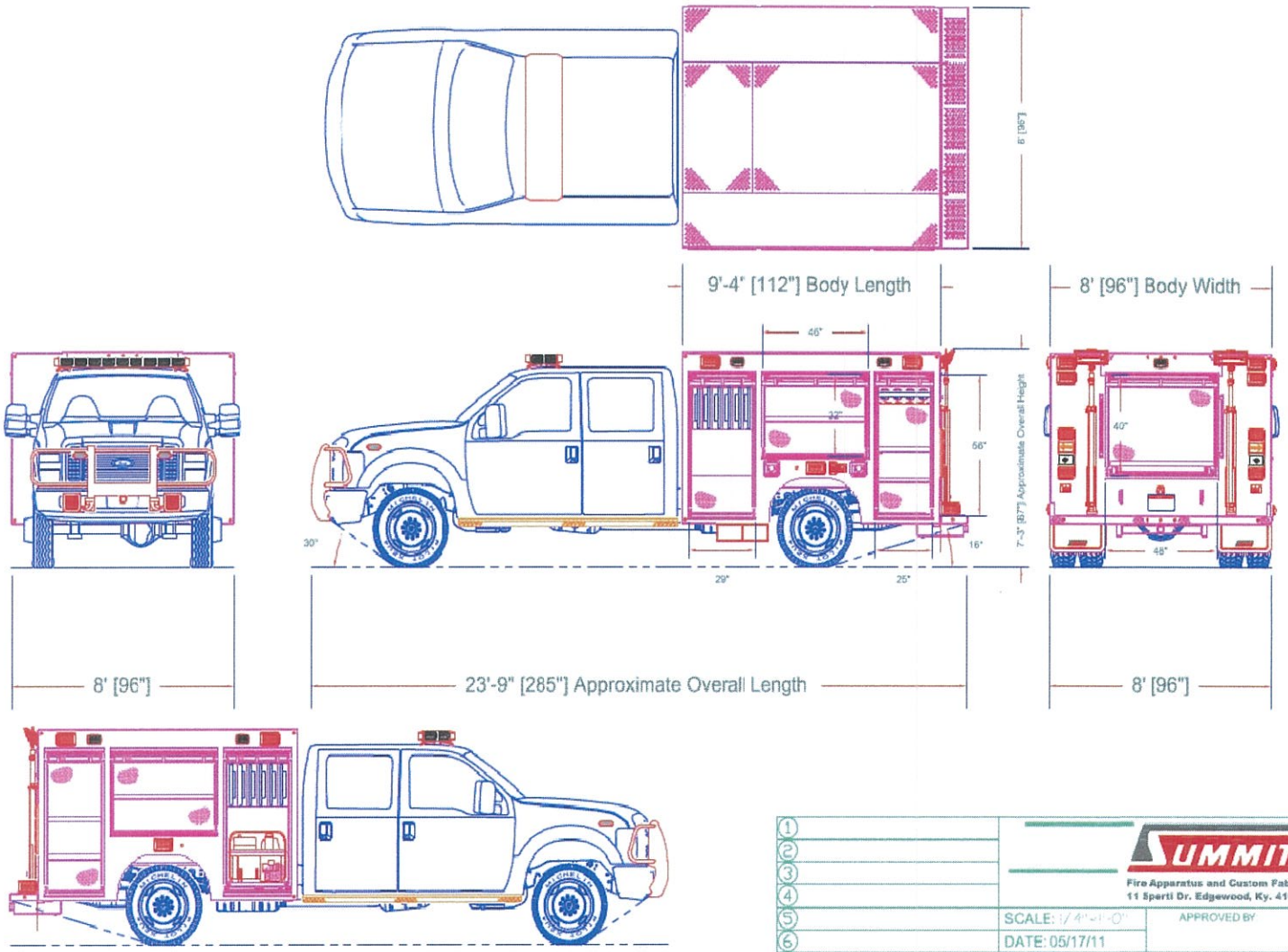

Time Modified: 11:40 A.M.
Date Modified: 8/11/2011
Date Created: 4/1/2010
Drawing File: F:\Drawings\Rescue\MiniRescue\HavreDeGrace\HavreDeGrace.dwg
Scale: 1=48

1	SUMMIT Fire Apparatus and Custom Fabricators 11 Sperti Dr. Edgewood, Ky. 41017
2	
3	
4	
5	SCALE: 1/4"=1'-0" · APPROVED BY · DRAWN BY: RSC
6	DATE: 05/17/11 · JOB# Havre
7	Havre de Grace Ambulance
8	
9	Mini-Rescue Unit · DRAWING NUMBER HavreDeGrace
REVISIONS	

SUMMIT
Fire Apparatus and Custom Fabricators

DESCRIPTION	QTY	PRICE	STD. OPT	INCLUDED OPT.
SUMMIT 112" RESCUE / UTILITY PROGRAM		$95,060.00		
CHASSIS	1			
2014 Ford F-550 Chassis XL				
4X4 SD REGULAR CAB 141" WB DRW XL				
POWERTRAIN:				
Powerstroke 6.7L V-8 Ohv Direct Diesel Injection 32 Valve Intercooled Turbo Diesel Engine				
357 Amp Dual Alternator				
750 Amp (Total) 78 Amp Hours (Ah) (Total) Battery Dual Batteries With Run Down Protection				
Engine Block Heater				
6-Speed Electronic Selectshift Automatic Transmission With Overdrive, Lock-Up, Driver Selection				
Part-Time Four-Wheel Drive With Electronic Transfer Case Shift				
Auto Locking Hubs				
Driveline Traction Control				
Limited Slip W/4.88 Axle Ratio				
Stainless Steel Exhaust				
Hydraulic Power-Assist Re-Circulating Ball Steering				
4-Wheel Disc Brakes With Front And Rear Vented Discs				
Firm Ride Suspension				
Mono-Beam Non-Independent Front Suspension				
Front Anti-Roll Bar				
Front Coil Springs				
Hd Front Shocks				
Rigid Rear Axle				
Rear Leaf Suspension				
Rear Anti-Roll Bar				
Hd Rear Leaf Springs				
Hd Rear Shocks				
Front And Rear 19.5" X 6.00" Argent Steel Wheels				
Lt225/70Sr19.5 Bsw As Front And Rear Tires				
SAFETY				
4-Wheel Anti-Lock Braking System				
Dual Airbags, Seat Mounted Driver And Passenger Side-Impact Airbags, Curtain Overhead Airbags				
Front Height Adjustable Seatbelts				
COMFORT AND CONVENIENCE				
Air Conditioning, Underseat Ducts				
Am/Fm Stereo, Clock, Seek-Scan, 2 Speakers, Fixed Antenna				
2 12V Dc Power Outlets, Retained Accessory Power				

Fire Apparatus and Custom Fabricators

DESCRIPTION	QTY	PRICE	STD. OPT	INCLUDED OPT.
SUMMIT 112" RESCUE / UTILITY PROGRAM		$95,060.00		
Analog Instrumentation Display Includes Tachometer, Oil Pressure Gauge, Engine Temperature Gauge, Turbo/Supercharger Boost				
Warning Indicators Include Oil Pressure, Engine Temperature, Battery, Lights On, Key, Low Fuel, Door Ajar, Service Interval, Brake Fluid				
Steering Wheel With Tilt And Telescopic Adjustment				
Interior Lights Include Dome Light With Fade				
Glove Box, Front Cupholder, Instrument Panel Bin, Driver And Passenger Door Bins, Upfitter Switches				
SEATING AND INTERIOR				
Seating Capacity Of 3 * 40-20-40 Split-Bench Front Seat With Adjustable Head Restraints, Center Armrest With Storage				
4-Way Adjustable Driver Seat Includes Lumbar Support				
4-Way Adjustable Passenger Seat				
Vinyl Faced Front Seats With Vinyl Back Material				
Full Cloth Headliner, Full Vinyl/Rubber Floor Covering, Plastic/Rubber Gear Shift Knob, Chrome Interior Accents				
EXTERIOR FEATURES				
Side Impact Beams, Fully Galvanized Steel Body Material				
Black Fender Flares				
Black Front Windshield Molding				
Black Window Moldings				
Black Door Handles				
Black Grille				
2 Doors				
Trailer Harness				
Driver And Passenger Power Remote Black Heated Convex Spotter Folding Manual Extendable Trailer Outside Mirrors With Turn Signal Indicators				
Front Black Bumper With Front Tow Hooks				
Additional Exterior Lights Include Cab Clearance Lights, Underhood Light				
Clearcoat Monotone Paint				
EMISSIONS				
425 50 State Emissions				
DIMENSIONS AND CAPACITIES				
Output 300 Hp @ 2,800 Rpm Torque 660 Lb.-Ft. @ 1,600 Rpm				
1St Gear Ratio 3.974				
2Nd Gear Ratio 2.318				
3Rd Gear Ratio 1.516				
4Th Gear Ratio 1.149				
5Th Gear Ratio 0.858				
6Th Gear Ratio .0674				

Fire Apparatus and Custom Fabricators

DESCRIPTION	QTY	PRICE	STD. OPT	INCLUDED OPT.
SUMMIT 112" RESCUE / UTILITY PROGRAM		$95,060.00		
Reverse Gear Ratio 3.128				
Gvwr 18,000 Lbs.				
Front GAWR Weight 7,000 lbs.				
Rear GAWR Weight 13,660 lbs.				
Payload 10,995 lbs.				
Front Axle Capacity 7,000 Lbs.				
Rear Axle Capacity 13,660 Lbs.				
Front Spring Rating 7,000 Lbs.				
Rear Spring Rating 13,660 Lbs.				
Front Tire/Wheel Capacity 7,500 Lbs.				
Rear Tire/Wheel Capacity 15,000 Lbs.				
Towing Capacity 16,000 Lbs.				
5Th-Wheel Towing Capacity 17,100 Lbs.				
Front Legroom 41.1 "				
Front Headroom 40.7 "				
Front Hiproom 67.6 "				
Front Shoulder Room 68.0 "				
Passenger Area Volume 65.9 Cu.Ft.				
Body Width 95.2 "				
Body Height 80.7 "				
Wheelbase 140.8 "				
Cab To Axle 60.0 "				
Axle To End Of Frame 47.6 "				
Front Tread 74.8 " Rear Tread 74.0 "				
Fuel Tank 40.0 Gal.				
SELECTED OPTIONS				
47A Ambulance Prep Pkg				
41H Engine Block Heater *Std In Ak, Co, Ia, Id, Me, Mi, Mn, Mt, Nd, Nh, Ny, Sd, Vt, Wi, Wy				
62R Transmission Pwr Take-Off Provision				
68M Payload Upgrade Pkg -Inc: Upgraded Frame, Upgraded Rear Axle, Upgraded Springs, Low Deflection/High Capacity, Increased Gvwr To 19,5000				
531 Trailer Tow Pkg -Inc: Trailer Brake Wiring Kit				
525 Cruise Control				
Tgb Tires: 225/70Rx19.5G Bsw Max Traction				
98R Operator Commanded Regeneration (Ocr)				
NFPA 2601 Chassis Upfit, Includes Vdr, Seatbelts Sensors, And Red Seat Belts In Lieu Of Grey				
CHASSIS UPFIT				
NFPA Compliant Steps - 2 Door Cab Standard Step	1			
Grab Handles, Cab - Delete	1			
Rear Tow Eyes - Painted Steel (Thru Body)	2			

Fire Apparatus and Custom Fabricators

DESCRIPTION	QTY	PRICE	STD. OPT	INCLUDED OPT.
SUMMIT 112" RESCUE / UTILITY PROGRAM		$95,060.00		
Vehicle Data Recorder - Provided By Chassis Manufacturer	1			
Seatbelt Warning System - Provided By Chassis Manufacturer	1			
Wheels - Unfinshed (Factory Color)	1			
Tire Pressure Monitoring System - Valve Stem Indicators	6			
Rear Mud Flaps	2			
Fluid Identifcation Plate	1			
Fuel Type Label - Diesel	1			
Seating Label - Maximum Seating Of 2	1			
Vehicle Height Label	1			
Seatbelt Warning Label	1			
Riding On Step Warning Label - Rear of Body	1			
Helmet In Cab Warning Label	1			
NFPA Helmet Storage - Department To Store In Body	1			
BODY - 112"	1			
Body Construction - Combination Formed Sheet / Extruded	1		x	
Body Subframe - Aluminum Extruded	1		x	
Material - 190" and .160" 5052 Aluminum	1		x	
Body Mounting	1		x	
Polymer Isolation Strips - Chassis Frame	1		x	
Corrosion Protection Pkg - Anti Corrosion Compound and Nylon Spacers on All Fasteners				
Construction - Aluminum	1		x	
Body Dimensions - 112" Long,66" High, 96" Wide	1		x	
Compartment Interiors - Unfinished Aluminum	1		x	
Compartment Floors - Raised Sweep-out Type	1		x	
Roof - NFPA Treadplate	1		x	
Rear Drop For Tailboard - Steel	1		x	
Rear Tail Board - 8 inch NFPA Aluminum Treadplate	1		x	
Grab Rails - Two (2) One Each Side Of Rear Compartment	1		x	
Fuel Fill, Drivers Side Rear Wheel Well (Aft) - Factory Plastic	1		x	
DEF Fill, Drivers Side Rear Wheel Well (Fore) - Factory Plastic	1		x	
RubRails - Delete	1		x	
Fenderettes - Delete	1		x	
COMPARTMENTATION				
6-Bay With Rear Cargo Area	1		x	
Rear Cargo Area - Open (No Roof)	1		x	
Rear Cargo Area Floor - Smooth Aluminum Sheet	1		x	
Rear Cargo Area Finish - Unfinished Aluminum	1		x	
Front Compartment - Transverse	1		x	
L1 Compartment Dimensions - 29" Wide x 56" High x 23" Deep lower (Transverse upper)	1		x	

Fire Apparatus and Custom Fabricators

DESCRIPTION	QTY	PRICE	STD. OPT	INCLUDED OPT.
SUMMIT 112" RESCUE / UTILITY PROGRAM		$95,060.00		
L1 Adjustable Shelf Hard ware - P100 Aluminum Unistrut	2			x
L2 Compartment Dimensions - 46" Wide x 32" High x 23" Deep	1		x	
L2 Adjustable Shelf Hard ware - P100 Aluminum Unistrut	2			x
L3 Compartment Dimensions - 29" Wide x 56" High x 23" Deep	1		x	
L3 Adjustable Shelf Hard ware - P100 Aluminum Unistrut	2			x
R1 Compartment Dimensions - 29" Wide x 56" High x 23" Deep Lower (Transverse Upper)	1		x	
R1 Adjustable Shelf Hard ware - P100 Aluminum Unistrut	2			x
R2 Compartment Dimensions - 46" Wide x 32" High x 23" Deep	1		x	
R2 Adjustable Shelf Hard ware - P100 Aluminum Unistrut	2			x
R3 Compartment Dimensions - 29" Wide x 56" High x 23" Deep	1		x	
R3 Adjustable Shelf Hard ware - P100 Aluminum Unistrut	2			x
Rear Cargo Area Dimensions - 48" Wide x 48" High x 78" Deep	1		x	
Adjustable Shelf Hardware, Rear Cargo Area- Delete	1		x	
Compartment Doors - Hansen Roll Up Doors	6		x	
Door Finish - Brushed	1		x	
Top Seal - Drip Rail With Wiper	1		x	
Internal Drip Pans - Delete	1		x	
Door Locks - Delete	1		x	
BODY UPFIT				
12 VOLT ELECTRICAL REQUIRMENTS				
12 Volt Elctrical System - Non Multiplex System	1		x	
Wiring Requirments - NFPA 1901	1		x	
SAE Practices & FMVSS Compliant	1		x	
Wiring - GXL Stranded Copper	1		x	
12V Dc Voltage Output Testing & Documentation	1		x	
Switch Panel - Ford Auxiliary Switches - One Master Switch Warning	1		x	
Reserve Capacity Test:	1		x	
Alternator Performance Test At Idle:	1		x	
Alternator Performance Test At Full Load:	1		x	
Low Voltage Alarm Test:	1		x	
Documentation - NFPA Test Results	1		x	
Battery Disconnect Switch - Solenoid Activated From Ignition Switch	1		x	
Battery Light - Green L.E.D. Dash Mounted	1		x	
Clearance / Marker Lights - Tecniq P2 L.E.D	21		x	
License Plate Bracket and Light - Arrow	1		x	
Brake Lights, - Tecniq K60 Red L.E.D.	2		x	

SUMMIT
Fire Apparatus and Custom Fabricators

DESCRIPTION	QTY	PRICE	STD. OPT	INCLUDED OPT.
SUMMIT 112" RESCUE / UTILITY PROGRAM		$95,060.00		
Backup Lights - Tecniq K60 Amber L.E.D.	2		x	
Backup Lights - Tecniq K60 Clear L.E.D.	2		x	
Light Cluster Housing - Chrome	2		x	
Engine Compartment Light - Grote 61491-5 Switched	1		x	
Ground Area Lighting 2 Door Cab - Tecniq L.E.D	2		x	
Ground Area Lighting Body - Tecniq L.E.D	2		x	
Rear Cargo Area Light - TecNiq	1		x	
Compartment Lighting - TecNiq L.E.D Single Dome	7			
Compartment Ajar Light - Weldon LED	1			
Low Voltage Alarm	1		x	
Battery Charging Receptacle -	1		x	
Light Bar - Whelen 55" Freedom L.E.D.	1		x	
Blocking Right Away	1		x	
Lower Zone A Warning Lights - Whelen M2 Series L.E.D.	4		x	
Lower Zone A Warning Light Chrome Flange - Whelen M2FC flange	4		x	
Lower Zone B&D Intersection Lights - Whelen M2 Series L.E.D	2		x	
Lower Zone B&D Intersection Light Chrome Flange - Whelen M2FC	2		x	
Lower Zone B&D Rear Warning Lights - Whelen 600 Series	2		x	
Lower Zone B&D Rear Warning Light Chrome Flange - Whelen 6Efl	2		x	
Lower Zone C Warning Lights - Whelen 600 Series	2		x	
Upper Zone B & D Warning Lights - Whelen 600 Series	2		x	
Upper Zone B & D Warning Light Chrome Flange - Whelen 6Eflange	2		x	
Upper Zone C Warning Lights - Whelen 600 Series	2		x	
Upper Zone C Warning Light Chrome Flange - Whelen 6Eflange	2		x	
Electronic Siren - Whelen 295SLSA1	1		x	
Siren Speaker - Code 3 PB100B	1		x	
PAINTING AND STRIPING				
Undercoating - Delete	1		x	
PPG Two Stage Urthane - Body Job Color	1		x	
NFPA Perimeter - 4" White Reflective Cab	1		x	
NFPA Perimeter - 4" White Reflective Body	1		x	
NFPA Chevron 6' Red/Amber Reflective - Body Only (No Rear Door)	1		x	
WARRANTIES				
Limited Warranty (1-Year)	1		x	
Paint Warranty (7-Year)	1		x	
Electrical Warranty (5-Year)	1		x	
Body Structural Warranty (10-Year)	1		x	

11 Sperti Drive, Edgewood, KY 41017
(859)331-0360
FAX: (859)331-0399

Fire Apparatus and Custom Fabricators

DESCRIPTION	QTY	PRICE	STD. OPT	INCLUDED OPT.
SUMMIT 112" RESCUE / UTILITY PROGRAM		$95,060.00		
112 " ERB OPTIONS LIST:				
POPULAR CHASSIS OPTIONS: FORD				
Super Cab (Extend Cab) In Lieu Of The 2 Door Cab.		$2,000.00		
Crew Cab (Extend Cab) In Lieu Of The 2 Door Cab.		$3,000.00		
F450, 15,000 GVWR in Lieu Of The F550, 18,000 GVWR		-$1,000.00		
Limited Slip Rear Axle		$360.00		
MAX-Trac All Terrain Tires		$245.00		
PTO Provision		$280.00		
Ambulance Prep Package		$1,135.00		
Electronic Shift on the Fly		$215.00		
Electronic Brake Controller		$285.00		
Payload Upgrade Package - 19,500 lb. GVWR F550 Only		$1,155.00		
Power Equipment Group -Reg. Cab		$895.00		
Power Equipment Group - Crew Cab		$1,105.00		
XL Value Group		$225.00		
NFPA 2601 Upfit VDR & Seat Belt Monitoring System		$2,965.00		
Delete 4 wheel drive option		-$2,500.00		
POPULAR CHASSIS OPTIONS: RAM				
2014 Ram 5500 Reg Cab ST 4x4 DRW, Diesel/Auto Chassis In Lieu Of Ford F550		$600.00		
4 Door Crew Cab In Lieu Of 2 Door Cab		$4,350.00		
All Traction Tires		$250.00		
PTO Provision		$205.00		
Electronic Brake Controller		$230.00		
Power Equipment Group -Reg. Cab		$230.00		
Power Equipment Group - Crew Cab		$400.00		
SLT Trim Group		$3,500.00		
Delete 4 wheel drive option		-$2,900.00		
PAINT:				
Repaint chassis - close door (2 door)		$3,090.00		
Repaint chassis - close door (4 door)		$3,870.00		
Painting Two -Tone (lower half F1 red upper white)		$1,900.00		
Painting Jambs and under hood in addition to paint (2 Door)		$600.00		
Painting Jambs and under hood in addition to paint (4 Door)		$1,200.00		
Painted Steel Wheels to Job Color		$460.00		
CHASSIS ACCESSORIES:				
NFPA Complaint Full Punch Raised treadplate running boards In Lieu of Base Step		$425.00		

SUMMIT
Fire Apparatus and Custom Fabricators

DESCRIPTION	QTY	PRICE	STD. OPT	INCLUDED OPT.
SUMMIT 112" RESCUE / UTILITY PROGRAM		$95,060.00		
Center Console for radio & siren - Treadplate Aluminum (No Storage)		$775.00		
Center Consolefor radio & siren - Smooth Aluminum (No Storage)		$720.00		
Book / Binder Misc Storage for console		$400.00		
Rubberized coating for console		$260.00		
Switch Panel in console in lieu of Ford Auxiliary		$210.00		
Raised or Angled switch panel on console		$115.00		
Trailer Hitch - 2" Class 4 receiver (includes 4 way plug)		$990.00		
Seven way trailer plug in lieu of 4 way		$70.00		
Warn Powder Coat Steel Front Winch Mount / Brush Guard w/ receiver		$1,730.00		
Powder Coat Steel Front Head Light Guards		$380.00		
Warn Stainless Steel Front Winch Mount / Brush Guard w/ receiver		$2,280.00		
Stainless Steel Front Head Light Guards		$450.00		
Heavy Duty Hammer tone winch ready Bumper with driving light cut outs		$1,900.00		
Heavy Duty Hammer tone 1/4" plate Grille and brush guards		$560.00		
Heavy Duty Polished Stainless Steel Grille and Brush Guards		$1,187.00		
Portable 9500 lb Winch with wireless remote		$1,235.00		
Fixed Warn 12,000 lb Winch with wireless remote		$1,305.00		
Fixed Warn 15,000 lb Winch with wireless remote		$1,600.00		
Stainless Steel Wheel Simulators		$605.00		
BODY OPTIONS:				
116" Body In Lieu Of 112" Body - L3 & R3 Ccompartment To Be 29" Wide		$150.00		
Enclosed Rear Cargo Area With Rear Roll Up Door		$1,800.00		
96" Deep Rear Cargo Area (Transverse Compartment 38" wide and not 53")		$200.00		
Full Depth Rear Compartment (No Transverse Front Compartments)		-$275.00		
Roll Up Rear Hose Bed Cover		$5,800.00		
Increased Angle of Departure		$400.00		
Body height even with or lower than cab (shorten height)		$1,500.00		
ROM doors in lieu of Hansen		$560.00		
Rear Tailgate (No Rear Cargo Enclosure)		$810.00		
L3 & R3 Wire Covers (protect wiring)		$250.00		
Fuel Fill, Drivers Side Rear Wheel Well (Aft) - Cast Aluminum		$58.00		
DEF Fill, Drivers Side Rear Wheel Well (Fore) - Cast Aluminum		$56.00		
Aluminum Extruded RubRails		$780.00		

SUMMIT
Fire Apparatus and Custom Fabricators

DESCRIPTION	QTY	PRICE	STD. OPT	INCLUDED OPT.
SUMMIT 112" RESCUE / UTILITY PROGRAM		$95,060.00		
Polished Stainless Steel Fenderettes With full Wheel Well Liners		$985.00		
STORAGE OPTIONS:				
SCBA Spare Bottle Storage - Two (2) Passenger Side Cast Aluminum Access Doors		$560.00		
L1/R1 floor extension (extend transverse center floor out to door) each		$160.00		
Swing Door Enclosure Below Floor Extension		$230.00		
Adjustable Shelf (22" Deep)		$200.00		
Adjustable Slide Tray (22" Deep, 250lb rated)		$555.00		
Roll Out / Tilt Down Tray (22" Deep)		$725.00		
Heavy Slide Tray (600 LB Rated) - Floor Mounted		$650.00		
Heavy Slide Tray (1000 LB Rated) -Floor Mounted		$680.00		
Heavy Slide Tray For Rear Cargo Area (1000 LB Rated)		$1,580.00		
Roll Out Tool Board		$750.00		
Full Height Compartment Divider		$480.00		
PUMP OPTIONS				
200 Gallon Poly Tank & Skid, 11- 13 HP Gasoline Engine Pump, Painted Steel Pipe Manifold, 1/4 Industrial Valves, 1.5" Preconnect W/ Hose Trough, Hannay Booster Reel W/100' of 1", 1.5" Rear Discharge, Installed In The Body		$11,200.00		
200 Gallon Poly Tank & Skid, 18 HP Gasoline engine Pump, Painted Steel Pipe Manifold, 1/4 Industrial Valves, 1.5" Preconnect W/ Hose Trough, Hannay Booster Reel W/100' of 1", 1.5" Rear Discharge, Installed In The Body		$14,090.00		
250 Gallons Of Water In lieu Of 200		$200.00		
300 Gallons Of Water In Lieu Of 200		$350.00		
Raised Aluminum Skid with Under Skid Storage In Lieu Of Poly		$1,275.00		
Stainless Steel Manifold And Akron Valves		$1,100.00		
Around The Pump Foam System and 20 Gallon Foam Cell		$1,375.00		
Electric Power From Chassis In Lieu Of Battery		$400.00		
12 VOLT ELECTRICAL OPTIONS				
Kussmaul Battery Conditioner with Auto Eject inlieu of plug		$1,130.00		
Driving Lights in HD bumper option		$450.00		
LED Strip lighting in lieu of single LED compartment light		$1,300.00		
Additional LED Light on Cargo Area Bulkhead		$125.00		
Additional LED Strip Light in Transverse Compartment		$170.00		
LED Ground lights under front of body		$275.00		
LED Ground light under front bumper		$205.00		
LED Browlight on front of cab		$1,550.00		

SUMMIT
Fire Apparatus and Custom Fabricators

DESCRIPTION	QTY	PRICE	STD. OPT	INCLUDED OPT.
SUMMIT 112" RESCUE / UTILITY PROGRAM		$95,060.00		
Whelen TAM85 46" Traffic Advisor - Requires Rear Compartment Enclosure		$1,530.00		
12 Volt TecNiq K70 LED Clear Scene Lights - Two (2), One on Each body Side		$660.00		
12 Volt TecNiq K70 LED Clear Scene Lights - Four (4), One on Each Body Side, Two on Rear		$1,190.00		
12 Volt TecNiq K70 LEDClear Scene Lights - Six (6), Two on Each Body Side, Two on Rear		$1,480.00		
12 Volt Whelen M6 Series LED Clear Scene Lights - Two (2), One on Each Body Side		$700.00		
12 Volt Whelen M6 Series LED Clear Scene Lights - Four (4), One on Each Body Side, Two on Rear		$1,270.00		
12 Volt Whelen M6 Series LED Clear Scene Lights - Six (6), Two on Each Body Side, Two on Rear		$1,600.00		
12 Volt Whelen 600 Series LED Clear Scene Lights - Two (2), One on Each Body Side		$600.00		
12 Volt Whelen 600 Series LED Clear Scene Lights - Four (4), One on Each Body Side, Two on Rear		$1,070.00		
12 Volt Whelen 600 Series LED Clear Scene Lights - Six (6), Two on Each Body Side, Two on Rear		$1,300.00		
12 Volt Whelen 600 Series Halogen Clear Scene Lights - Two (2), One on Each Body Side		$430.00		
12 Volt Whelen 600 Series Halogen Clear Scene Lights - Four (4), One on Each Body Side, Two on Rear		$720.00		
12 Volt Whelen 600 Series Halogen Clear Scene Lights - Six (6), Two on Each Body Side, Two on Rear		$905.00		
12 Volt Whelen Pioneer 3000 Push Up Lights - Two (2) Mounted on Body		$2,720.00		
12 Volt FRC Spectra 900 LED Clear Scene Lights - Two (2), One on Each Body Side		$1,100.00		
12 Volt FRC Spectra 900 LED Clear Scene Lights - Four (4), One on Each Body Side, Two on Rear		$2,062.00		
12 Volt FRC Spectra 900 LED Clear Scene Lights - Six (6), Two on Each Body Side, Two on Rear		$2,952.00		
12 Volt FRC Evolution LED FCA530-V08 Push Up Lights - Two (2) Mounted on Body		$2,594.00		
120 / 240 VOLT ELECTRICAL:				
5000 W Gasoline Powered Honda Generator - Mounted on slide tray (Elec Start)		$4,200.00		
5000 W Gasoline Powered Generator - Mounted on slide tray (Elec Start)		$2,800.00		
3000 W Baldor Diesel Generator Mounted on slide tray (Elec Start)		$4,200.00		

SUMMIT
Fire Apparatus and Custom Fabricators

DESCRIPTION	QTY	PRICE	STD. OPT	INCLUDED OPT.
SUMMIT 112" RESCUE / UTILITY PROGRAM		$95,060.00		
5500 W Baldor Diesel Generator Mounted on slide tray (Elec Start)		$5,450.00		
120/240 Volt load center with up to 4 breakers & pigtail for genertaor		$750.00		
Fuel Tap from chassis (Diesel)		$610.00		
8000 KW Smart Power Hydraulic generator w/ load center		$16,910.00		
Compartment 120 volt 20 amp receptacle (each)		$175.00		
External 240 volt compartment receptacle		$275.00		
External 120 volt receptacle		$210.00		
PAINT:				
Two Tone Chassis - Two Door		$2,810.00		
Two Tone Chassis - Four Door		$3,210.00		
Painting Jambs and under hood in addition to paint (2 Door)		$600.00		
Painting Jambs and under hood in addition to paint (4 Door)		$1,200.00		
Two Tone Body		$2,550.00		
Painted Steel Wheels to Job Color		$460.00		
Body Undercoating		$415.00		
Painted Roll Up Doors In Lieu of Brushed		$1,200.00		
Rubberized Spray Coated Rear Cargo Area (9' body)		$680.00		
Rubberized Spray Coated Rear Cargo Area (12' body)		$730.00		
STRIPING & LETTERING:				
NFPA Perimeter Stripe 4"		$730.00		
1- 4 -1 NFPA Perimeter Stripe 4" with 1" stripe above and below		$900.00		
Z pattern in stripe		$150.00		
Sixty 3" Reflective Lettering		$575.00		

11 Sperti Drive, Edgewood, KY 41017
(859)331-0360
FAX: (859)331-0399

SUMMIT

Fire Apparatus and Custom Fabricators

CUSTOM DESIGN IS OUR SPECIALTY. QUALITY IS OUR COMMITMENT!

11 Sperti Drive Edgewood, KY 41017

(859) 331-0360 www.summitfireapparatus.com

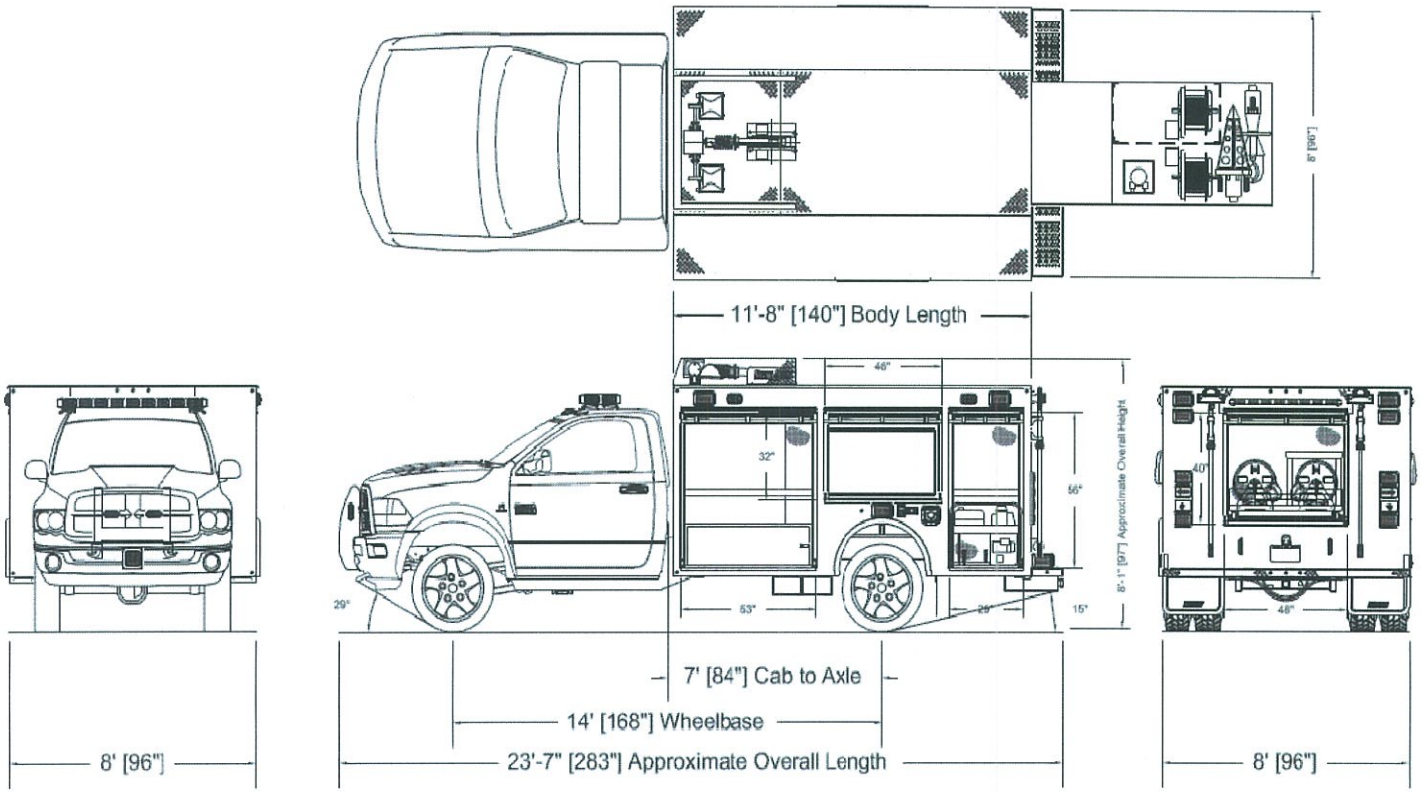

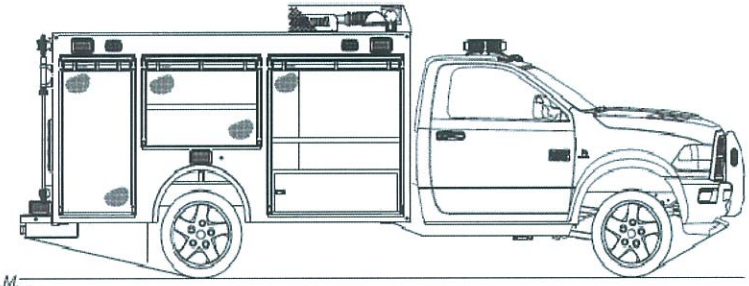

Time Modified: 9:35 A.M.
Date Modified: 11/15/2012
Date Created: 4/1/2010
Drawing File: F:\Drawings\Projects\Workspace\Rescue\MiniRescue\Plains\Plains.dwg
Scale: 1=48

1	SUMMIT Fire Apparatus and Custom Fabricators 11 Sperti Dr. Edgewood, Ky. 41017		
2			
3			
4			
5	SCALE: 1/4"=1'-0"	APPROVED BY:	DRAWN BY: RSC
6	DATE: 08/09/11		JOB# Plain
7	The Plains F.D.		
8			
9	Mini-Rescue Unit		DRAWING NUMBER Plains
REVISIONS			

Fire Apparatus and Custom Fabricators

DESCRIPTION	QTY	PRICE	STD. OPT	INCLUDED OPT.
SUMMIT 140" RESCUE / UTILITY PROGRAM		$99,502.00		
CHASSIS - 2 DOOR				
2014 Ford F-550 Chassis XL	1			
4X4 SD REGULAR CAB 165" WB DRW XL				
POWERTRAIN:				
Powerstroke 6.7L V-8 Ohv Direct Diesel Injection 32 Valve Intercooled Turbo Diesel Engine				
357 Amp Dual Alternator				
750 Amp (Total) 78 Amp Hours (Ah) (Total) Battery Dual Batteries With Run Down Protection				
Engine Block Heater				
6-Speed Electronic Selectshift Automatic Transmission With Overdrive, Lock-Up, Driver Selection				
Part-Time Four-Wheel Drive With Electronic Transfer Case Shift				
Auto Locking Hubs				
Driveline Traction Control				
Limited Slip W/4.88 Axle Ratio				
Stainless Steel Exhaust				
Hydraulic Power-Assist Re-Circulating Ball Steering				
4-Wheel Disc Brakes With Front And Rear Vented Discs				
Firm Ride Suspension				
Mono-Beam Non-Independent Front Suspension				
Front Anti-Roll Bar				
Front Coil Springs				
Hd Front Shocks				
Rigid Rear Axle				
Rear Leaf Suspension				
Rear Anti-Roll Bar				
Hd Rear Leaf Springs				
Hd Rear Shocks				
Front And Rear 19.5" X 6.00" Argent Steel Wheels				
Lt225/70Sr19.5 Bsw As Front And Rear Tires				
SAFETY				
4-Wheel Anti-Lock Braking System				
Dual Airbags, Seat Mounted Driver And Passenger Side-Impact Airbags, Curtain Overhead Airbags				
Front Height Adjustable Seatbelts				
COMFORT AND CONVENIENCE				
Air Conditioning, Underseat Ducts				
Am/Fm Stereo, Clock, Seek-Scan, 2 Speakers, Fixed Antenna				
2 12V Dc Power Outlets, Retained Accessory Power				
Analog Instrumentation Display Includes Tachometer, Oil Pressure Gauge, Engine Temperature Gauge, Turbo/Supercharger Boost Gauge, Transmission Fluid Temp Gauge, Engine Hour Meter, Exterior				

Fire Apparatus and Custom Fabricators

DESCRIPTION	QTY	PRICE	STD. OPT	INCLUDED OPT.
SUMMIT 140" RESCUE / UTILITY PROGRAM		$99,502.00		
Warning Indicators Include Oil Pressure, Engine Temperature, Battery, Lights On, Key, Low Fuel, Door Ajar, Service Interval, Brake Fluid				
Steering Wheel With Tilt And Telescopic Adjustment				
Interior Lights Include Dome Light With Fade				
Glove Box, Front Cupholder, Instrument Panel Bin, Driver And Passenger Door Bins, Upfitter Switches				
SEATING AND INTERIOR				
Seating Capacity Of 3 * 40-20-40 Split-Bench Front Seat With Adjustable Head Restraints, Center Armrest With Storage				
4-Way Adjustable Driver Seat Includes Lumbar Support				
4-Way Adjustable Passenger Seat				
Vinyl Faced Front Seats With Vinyl Back Material				
Full Cloth Headliner, Full Vinyl/Rubber Floor Covering, Plastic/Rubber Gear Shift Knob, Chrome Interior Accents				
EXTERIOR FEATURES				
Side Impact Beams, Fully Galvanized Steel Body Material				
Black Fender Flares				
Black Front Windshield Molding				
Black Window Moldings				
Black Door Handles				
Black Grille				
2 Doors				
Trailer Harness				
Driver And Passenger Power Remote Black Heated Convex Spotter Folding Manual Extendable Trailer Outside Mirrors With Turn Signal Indicators				
Front Black Bumper With Front Tow Hooks				
Additional Exterior Lights Include Cab Clearance Lights, Underhood Light				
Clearcoat Monotone Paint				
EMISSIONS				
425 50 State Emissions				
DIMENSIONS AND CAPACITIES				
Output 300 Hp @ 2,800 Rpm Torque 660 Lb.-Ft. @ 1,600 Rpm				
1St Gear Ratio 3.974				
2Nd Gear Ratio 2.318				
3Rd Gear Ratio 1.516				
4Th Gear Ratio 1.149				
5Th Gear Ratio 0.858				
6Th Gear Ratio .0674				
Reverse Gear Ratio 3.128				
Gvwr 18,000 Lbs.				
Front GAWR Weight 7,000 lbs.				

SUMMIT
Fire Apparatus and Custom Fabricators

DESCRIPTION	QTY	PRICE	STD. OPT	INCLUDED OPT.
SUMMIT 140" RESCUE / UTILITY PROGRAM		$99,502.00		
Rear GAWR Weight 13,660 lbs.				
Payload 10,995 lbs.				
Front Axle Capacity 7,000 Lbs.				
Rear Axle Capacity 13,660 Lbs.				
Front Spring Rating 7,000 Lbs.				
Rear Spring Rating 13,660 Lbs.				
Front Tire/Wheel Capacity 7,500 Lbs.				
Rear Tire/Wheel Capacity 15,000 Lbs.				
Towing Capacity 16,000 Lbs.				
5Th-Wheel Towing Capacity 17,100 Lbs.				
Front Legroom 41.1 "				
Front Headroom 40.7 "				
Front Hiproom 67.6 "				
Front Shoulder Room 68.0 "				
Passenger Area Volume 65.9 Cu.Ft.				
Body Width 95.2 "				
Body Height 80.7 "				
Wheelbase 165.8 "				
Cab To Axle 84.0 "				
Axle To End Of Frame 47.6 "				
Front Tread 74.8 " Rear Tread 74.0 "				
Fuel Tank 40.0 Gal.				
SELECTED CHASSIS OPTIONS				
47A Ambulance Prep Pkg				
41H Engine Block Heater *Std In Ak, Co, Ia, Id, Me, Mi, Mn, Mt, Nd, Nh, Ny, Sd, Vt, Wi, Wy				
531 Trailer Tow Pkg -Inc: Trailer Brake Wiring Kit				
525 Cruise Control				
98R Operator Commanded Regeneration (Ocr)				
NFPA 2601 Chassis Upfit, Includes Vdr, Seatbelts Sensors, And Red Seat Belts In Lieu Of Grey				
CHASSIS UPFIT				
NFPA Compliant Steps - 2 Door Cab Standard Step	1		x	
Grab Handles, Cab - Delete	1			x
Rear Tow Eyes - Painted Steel (Thru Body)	2		x	
Vehicle Data Recorder - Provided By Chassis Manufacturer	1		x	
Seatbelt Warning System - Provided By Chassis Manufacturer	1		x	
Wheels - Unfinshed (Factory Color)	1		x	
Tire Pressure Monitoring System - Valve Stem Indicators	6		x	
Rear Mud Flaps	2		x	
Fluid Identifcation Plate	1		x	
Fuel Type Label - Diesel	1		x	

Fire Apparatus and Custom Fabricators

DESCRIPTION	QTY	PRICE	STD. OPT	INCLUDED OPT.
SUMMIT 140" RESCUE / UTILITY PROGRAM		$99,502.00		
Seating Label - Maximum Seating Of 2	1		x	
Vehicle Height Label	1		x	
Seatbelt Warning Label	1		x	
Riding On Step Warning Label - Rear of Body	1		x	
Helmet In Cab Warning Label	1		x	
NFPA Helmet Storage - Department To Store In Body	1		x	
BODY - 140"	1			
Body Construction - Combination Formed Sheet / Extruded	1		x	
Body Subframe - Aluminum Extruded	1		x	
Material - 190" and .160" 5052 Aluminum	1		x	
Body Mounting	1		x	
Polymer Isolation Strips - Chassis Frame	1		x	
Corrosion Protection Pkg - Anti Corrosion Compound and Nylon Spacers on All Fasteners				
Construction - Aluminum	1		x	
Body Dimensions - 140" Long,66" High, 96" Wide	1		x	
Compartment Interiors - Unfinished Aluminum	1		x	
Compartment Floors - Raised Sweep-out Type	1		x	
Roof - NFPA Treadplate	1		x	
Rear Drop For Tailboard - Steel	1		x	
Rear Tail Board - 8 inch NFPA Aluminum Treadplate	1		x	
Grab Rails - Two (2) One Each Side Of Rear Compartment	1		x	
Fuel Fill, Drivers Side Rear Wheel Well (Aft) - Factory Plastic	1		x	
DEF Fill, Drivers Side Rear Wheel Well (Fore) - Factory Plastic	1		x	
RubRails - Delete	1		x	
Fenderettes - Delete	1		x	
COMPARTMENTATION				
6-Bay With Rear Cargo Area	1		x	
Rear Cargo Area - Open (No Roof)	1		x	
Rear Cargo Area Floor - Smooth Aluminum Sheet	1		x	
Rear Cargo Area Finish - Unfinished Aluminum	1		x	
Front Compartment - Transverse	1		x	
L1 Compartment Dimensions - 53" Wide x 56" High x 23" Deep lower	1		x	
L1 Adjustable Shelf Hard ware - P100 Aluminum Unistrut	2			x
L2 Compartment Dimensions - 46" Wide x 32" High x 23" Deep	1		x	
L2 Adjustable Shelf Hard ware - P100 Aluminum Unistrut	2			x
L3 Compartment Dimensions - 29" Wide x 56" High x 23" Deep	1		x	
L3 Adjustable Shelf Hard ware - P100 Aluminum Unistrut	2			x
R1 Compartment Dimensions - 53" Wide x 56" High x 23" Deep Lower (Transverse Upper)	1		x	
R1 Adjustable Shelf Hard ware - P100 Aluminum Unistrut	2			x
R2 Compartment Dimensions - 46" Wide x 32" High x 23" Deep	1		x	

SUMMIT
Fire Apparatus and Custom Fabricators

DESCRIPTION	QTY	PRICE	STD. OPT	INCLUDED OPT.
SUMMIT 140" RESCUE / UTILITY PROGRAM		$99,502.00		
R2 Adjustable Shelf Hard ware - P100 Aluminum Unistrut	2			x
R3 Compartment Dimensions - 29" Wide x 56" High x 23" Deep	1		x	
R3 Adjustable Shelf Hard ware - P100 Aluminum Unistrut	2			x
Rear Cargo Area Dimensions - 48" Wide x 48" High x 78" Deep	1		x	
Adjustable Shelf Hardware, Rear Cargo Area- Delete	1		x	
Compartment Doors - Hansen Roll Up Doors	6		x	
Door Finish - Brushed	1		x	
Top Seal - Drip Rail With Wiper	1		x	
Internal Drip Pans - Delete	1		x	
Door Locks - Delete	1		x	
BODY UPFIT				
12 VOLT ELECTRICAL REQUIRMENTS				
12 Volt Elctrical System - Non Multiplex System	1		x	
Wiring Requirments - NFPA 1901	1		x	
SAE Practices & FMVSS Compliant	1		x	
Wiring - GXL Stranded Copper	1		x	
12V Dc Voltage Output Testing & Documentation	1		x	
Switch Panel - Ford Auxiliary Switches - One Master Switch Warning System	1		x	
Reserve Capacity Test:	1		x	
Alternator Performance Test At Idle:	1		x	
Alternator Performance Test At Full Load:	1		x	
Low Voltage Alarm Test:	1		x	
Documentation - NFPA Test Results	1		x	
Battery Disconnect Switch - Solenoid Activated From Ignition Switch	1		x	
Battery Light - Green L.E.D. Dash Mounted	1		x	
Clearance / Marker Lights - Tecniq P2 L.E.D	21		x	
License Plate Bracket and Light - Arrow	1		x	
Brake Lights, - Tecniq K60 Red L.E.D.	2		x	
Turn Lights - Tecniq K60 Amber L.E.D.	2		x	
Backup Lights - Tecniq K60 Clear L.E.D.	2		x	
Light Cluster Housing - Chrome	2		x	
Engine Compartment Light - Grote 61491-5 Switched	1		x	
Ground Area Lighting 2 Door Cab - Tecniq L.E.D	2		x	
Ground Area Lighting Body - Tecniq L.E.D	2		x	
Rear Cargo Area Light - TecNiq	1		x	
Compartment Lighting - TecNiq L.E.D Single Dome	7			
Compartment Ajar Light - Weldon LED	1			
Low Voltage Alarm	1		x	
Battery Charging Receptacle -	1		x	
Light Bar - Whelen 55" Freedom L.E.D.	1		x	

Fire Apparatus and Custom Fabricators

DESCRIPTION	QTY	PRICE	STD. OPT	INCLUDED OPT.
SUMMIT 140" RESCUE / UTILITY PROGRAM		$99,502.00		
Blocking Right Away	1		x	
Lower Zone A Warning Lights - Whelen M2 Series L.E.D.	4		x	
Lower Zone A Warning Light Chrome Flange - Whelen M2FC flange	4		x	
Lower Zone B&D Intersection Lights - Whelen M2 Series L.E.D	2		x	
Lower Zone B&D Intersection Light Chrome Flange - Whelen M2FC flange	2		x	
Lower Zone B&D Rear Warning Lights - Whelen 600 Series	2		x	
Lower Zone B&D Rear Warning Light Chrome Flange - Whelen 6Eflange	2		x	
Lower Zone C Warning Lights - Whelen 600 Series	2		x	
Upper Zone B & D Warning Lights - Whelen 600 Series	2		x	
Upper Zone B & D Warning Light Chrome Flange - Whelen 6Eflange	2		x	
Upper Zone C Warning Lights - Whelen 600 Series	2		x	
Upper Zone C Warning Light Chrome Flange - Whelen 6Eflange	2		x	
Electronic Siren - Whelen 295SLSA1	1		x	
Siren Speaker - Code 3 PB100B	1		x	
PAINTING AND STRIPING				
Undercoating - Delete	1		x	
PPG Two Stage Urthane - Body Job Color	1		x	
NFPA Perimeter - 4" White Reflective Cab	1		x	
NFPA Perimeter - 4" White Reflective Body	1		x	
NFPA Chevron 6' Red/Amber Reflective - Body Only (No Rear Door)	1		x	
WARRANTIES				
Limited Warranty (1-Year)				
Paint Warranty (7-Year)				
Electrical Warranty (5-Year)				
Body Structural Warranty (10-Year)				
140 " ERB OPTIONS LIST:				
POPULAR CHASSIS OPTIONS: FORD				
Super Cab (Extend Cab) In Lieu Of The 2 Door Cab.		$2,000.00		
Crew Cab (Extend Cab) In Lieu Of The 2 Door Cab.		$3,000.00		
F450, 15,000 GVWR in Lieu Of The F550, 18,000 GVWR		-$1,000.00		
Limited Slip Rear Axle		$360.00		
MAX-Trac All Terrain Tires		$245.00		
PTO Provision		$280.00		
Electronic Shift on the Fly		$215.00		

SUMMIT
Fire Apparatus and Custom Fabricators

DESCRIPTION	QTY	PRICE	STD. OPT	INCLUDED OPT.
SUMMIT 140" RESCUE / UTILITY PROGRAM		$99,502.00		
Electronic Brake Controller		$285.00		
Payload Upgrade Package - 19,500 lb. GVWR F550 Only		$1,155.00		
Power Equipment Group -Reg. Cab		$895.00		
Power Equipment Group - Crew Cab		$1,105.00		
XL Value Group		$225.00		
NFPA 2601 Upfit VDR & Seat Belt Monitoring System		$2,965.00		
Delete 4 wheel drive option		($2,500.00)		
POPULAR CHASSIS OPTIONS: RAM				
2014 Ram 5500 Reg Cab ST 4x4 DRW, Diesel/Auto Chassis In Lieu Of Ford F550		$600.00		
4 Door Crew Cab In Lieu Of 2 Door Cab		$4,350.00		
All Traction Tires		$250.00		
PTO Provision		$205.00		
Electronic Brake Controller		$230.00		
Power Equipment Group -Reg. Cab		$230.00		
Power Equipment Group - Crew Cab		$400.00		
SLT Trim Group		$3,500.00		
Delete 4 wheel drive option		($2,900.00)		
PAINT:				
Repaint chassis - close door (2 door)		$3,090.00		
Repaint chassis - close door (4 door)		$3,870.00		
Painting Two -Tone (lower half F1 red upper white)		$1,900.00		
Painting Jambs and under hood in addition to paint (2 Door)		$600.00		
Painting Jambs and under hood in addition to paint (4 Door)		$1,200.00		
Painted Steel Wheels to Job Color		$460.00		
CHASSIS ACCESSORIES:				
NFPA Complaint Full Punch Raised treadplate running boards In Lieu of Base Step		$425.00		
Center Console for radio & siren - Treadplate Aluminum (No Storage)		$775.00		
Center Consolefor radio & siren - Smooth Aluminum (No Storage)		$720.00		
Book / Binder Misc Storage for console		$400.00		
Rubberized coating for console		$260.00		
Switch Panel in console in lieu of Ford Auxiliary		$210.00		
Raised or Angled switch panel on console		$115.00		
Trailer Hitch - 2" Class 4 receiver (includes 4 way plug)		$990.00		
Seven way trailer plug in lieu of 4 way		$70.00		
Warn Powder Coat Steel Front Winch Mount / Brush Guard w/ receiver		$1,730.00		

SUMMIT
Fire Apparatus and Custom Fabricators

DESCRIPTION	QTY	PRICE	STD. OPT	INCLUDED OPT.
SUMMIT 140" RESCUE / UTILITY PROGRAM		$99,502.00		
Powder Coat Steel Front Head Light Guards		$380.00		
Warn Stainless Steel Front Winch Mount / Brush Guard w/ receiver		$2,280.00		
Stainless Steel Front Head Light Guards		$450.00		
Heavy Duty Hammer tone winch ready Bumper with driving light cut outs		$1,900.00		
Heavy Duty Hammer tone 1/4" plate Grille and brush guards		$560.00		
Heavy Duty Polished Stainless Steel Grille and Brush Guards		$1,187.00		
Portable 9500 lb Winch with wireless remote		$1,235.00		
Fixed Warn 12,000 lb Winch with wireless remote		$1,305.00		
Fixed Warn 15,000 lb Winch with wireless remote		$1,600.00		
Stainless Steel Wheel Simulators		$605.00		
BODY OPTIONS:				
Enclosed Rear Cargo Area With Rear Roll Up Door		$1,800.00		
96" Deep Rear Cargo Area (Transverse Compartment 38" wide and not 53")		$200.00		
Full Depth Rear Compartment (No Transverse Front Compartments)		($275.00)		
Roll Up Rear Hose Bed Cover		$5,800.00		
Increased Angle of Departure		$400.00		
Body height even with or lower than cab (shorten height)		$1,500.00		
ROM doors in lieu of Hansen		$560.00		
Rear Tailgate (No Rear Cargo Enclosure)		$810.00		
L3 & R3 Wire Covers (protect wiring)		$250.00		
Fuel Fill, Drivers Side Rear Wheel Well (Aft) - Cast Aluminum		$58.00		
DEF Fill, Drivers Side Rear Wheel Well (Fore) - Cast Aluminum		$56.00		
Aluminum Extruded RubRails		$780.00		
Polished Stainless Steel Fenderettes With full Wheel Well Liners		$985.00		
STORAGE OPTIONS:				
SCBA Spare Bottle Storage - Two (2) Passenger Side Cast Aluminum Access Doors		$560.00		
L1/R1 floor extension (extend transverse center floor out to door) each		$160.00		
Swing Door Enclosure Below Floor Extension		$230.00		
Adjustable Shelf (22" Deep)		$200.00		
Adjustable Slide Tray (22" Deep, 250lb rated)		$555.00		
Roll Out / Tilt Down Tray (22" Deep)		$725.00		
Heavy Slide Tray (600 LB Rated) - Floor Mounted		$650.00		
Heavy Slide Tray (1000 LB Rated) -Floor Mounted		$680.00		
Heavy Slide Tray For Rear Cargo Area (1000 LB Rated)		$1,580.00		
Roll Out Tool Board		$750.00		
Full Height Compartment Divider		$480.00		

SUMMIT
Fire Apparatus and Custom Fabricators

DESCRIPTION	QTY	PRICE	STD. OPT	INCLUDED OPT.
SUMMIT 140" RESCUE / UTILITY PROGRAM		$99,502.00		
PUMP OPTIONS				
200 Gallon Poly Tank & Skid, 11 to 13 HP Gasoline Engine Pump, Painted Steel Pipe Manifold, 1/4 Industrial Valves, 1.5" Preconnect W/ Hose Trough, Hannay Booster Reel W/100' of 1", 1.5" Rear Discharge, Installed In The Body		$11,200.00		
200 Gallon Poly Tank & Skid, 18 HP Gasoline engine Pump, Painted Steel Pipe Manifold, 1/4 Industrial Valves, 1.5" Preconnect W/ Hose Trough, Hannay Booster Reel W/100' of 1", 1.5" Rear Discharge, Installed In The Body		$14,090.00		
250 Gallons Of Water In lieu Of 200		$200.00		
300 Gallons Of Water In Lieu Of 200		$350.00		
Raised Aluminum Skid with Under Skid Storage In Lieu Of Poly		$1,275.00		
Stainless Steel Manifold And Akron Valves		$1,100.00		
Around The Pump Foam System and 20 Gallon Foam Cell		$1,375.00		
Electric Power From Chassis In Lieu Of Battery		$400.00		
12 VOLT ELECTRICAL OPTIONS				
Kussmaul Battery Conditioner with Auto Eject inlieu of plug		$1,130.00		
Driving Lights in HD bumper option		$450.00		
LED Strip lighting in lieu of single LED compartment light		$1,300.00		
Additional LED Light on Cargo Area Bulkhead		$125.00		
Additional LED Strip Light in Transverse Compartment		$170.00		
LED Ground lights under front of body		$275.00		
LED Ground light under front bumper		$205.00		
LED Cab Mounted Browlight - FRC 850 -V08 8000 Lumen		$1,460.00		
Whelen TAM85 46" Traffic Advisor - Requires Rear Compartment Enclosure		$1,530.00		
12 Volt TecNiq K70 LED Clear Scene Lights - Two (2), One on Each body Side		$660.00		
12 Volt TecNiq K70 LED Clear Scene Lights - Four (4), One on Each Body Side, Two on Rear		$1,190.00		
12 Volt TecNiq K70 LEDClear Scene Lights - Six (6), Two on Each Body Side, Two on Rear		$1,480.00		
12 Volt Whelen M6 Series LED Clear Scene Lights - Two (2), One on Each Body Side		$700.00		
12 Volt Whelen M6 Series LED Clear Scene Lights - Four (4), One on Each Body Side, Two on Rear		$1,270.00		
12 Volt Whelen M6 Series LED Clear Scene Lights - Six (6), Two on Each Body Side, Two on Rear		$1,600.00		
12 Volt Whelen 600 Series LED Clear Scene Lights - Two (2), One on Each Body Side		$600.00		
12 Volt Whelen 600 Series LED Clear Scene Lights - Four (4), One on Each Body Side, Two on Rear		$1,070.00		

SUMMIT
Fire Apparatus and Custom Fabricators

DESCRIPTION	QTY	PRICE	STD. OPT	INCLUDED OPT.
SUMMIT 140" RESCUE / UTILITY PROGRAM		$99,502.00		
12 Volt Whelen 600 Series LED Clear Scene Lights - Six (6), Two on Each Body Side, Two on Rear		$1,300.00		
12 Volt Whelen 600 Series Halogen Clear Scene Lights - Two (2), One on Each Body Side		$430.00		
12 Volt Whelen 600 Series Halogen Clear Scene Lights - Four (4), One on Each Body Side, Two on Rear		$720.00		
12 Volt Whelen 600 Series Halogen Clear Scene Lights - Six (6), Two on Each Body Side, Two on Rear		$905.00		
12 Volt Whelen Pioneer 3000 Push Up Lights - Two (2) Mounted on Body		$2,720.00		
12 Volt FRC Spectra 900 LED Clear Scene Lights - Two (2), One on Each Body Side		$1,100.00		
12 Volt FRC Spectra 900 LED Clear Scene Lights - Four (4), One on Each Body Side, Two on Rear		$2,062.00		
12 Volt FRC Spectra 900 LED Clear Scene Lights - Six (6), Two on Each Body Side, Two on Rear		$2,952.00		
12 Volt FRC Evolution LED FCA530-V08 Push Up Lights - Two (2) Mounted on Body		$2,594.00		
120 / 240 VOLT ELECTRICAL:				
5000 W Gasoline Powered Honda Generator - Mounted on slide tray (Elec Start)		$4,200.00		
5000 W Gasoline Powered Generator - Mounted on slide tray (Elec Start)		$2,800.00		
3000 W Baldor Diesel Generator Mounted on slide tray (Elec Start)		$4,200.00		
5500 W Baldor Diesel Generator Mounted on slide tray (Elec Start)		$5,450.00		
120/240 Volt load center with up to 4 breakers & pigtail for genertaor		$750.00		
Fuel Tap from chassis (Diesel)		$610.00		
8000 KW Smart Power Hydraulic generator w/ load center		$16,910.00		
Compartment 120 volt 20 amp receptacle (each)		$175.00		
External 240 volt compartment receptacle		$275.00		
External 120 volt receptacle		$210.00		
PAINT:				
Two Tone Chassis - Two Door		$2,810.00		
Two Tone Chassis - Four Door		$3,210.00		
Painting Jambs and under hood in addition to paint (2 Door)		$600.00		
Painting Jambs and under hood in addition to paint (4 Door)		$1,200.00		
Two Tone Body		$2,550.00		
Painted Steel Wheels to Job Color		$460.00		
Body Undercoating		$415.00		

Fire Apparatus and Custom Fabricators

DESCRIPTION	QTY	PRICE	STD. OPT	INCLUDED OPT.
SUMMIT 140" RESCUE / UTILITY PROGRAM		$99,502.00		
Painted Roll Up Doors In Lieu of Brushed		$1,200.00		
Rubberized Spray Coated Rear Cargo Area (9' body)		$680.00		
Rubberized Spray Coated Rear Cargo Area (12' body)		$730.00		
STRIPING & LETTERING:				
NFPA Perimeter Stripe 4"		$730.00		
1- 4 -1 NFPA Perimeter Stripe 4" with 1" stripe above and below		$900.00		
Z pattern in stripe		$150.00		
Sixty 3" Reflective Lettering		$575.00		

11 Sperti Drive, Edgewood, KY 41017
(859)331-0360
FAX: (859)331-0399

SUMMIT

Fire Apparatus and Custom Fabricators

this **truck** is **not** getting stuck!

F554 EXTREME

- 42" Tires
- Increased Approach & Departure Angles
- Stability

ONLY BY SUMMIT!

- Ground Clearance
- Increased GVWR to 23,000
- Used by Military

Summit Fire Apparatus Edgewood, Kentucky • SummitFireApparatus.com • 859.331.0360

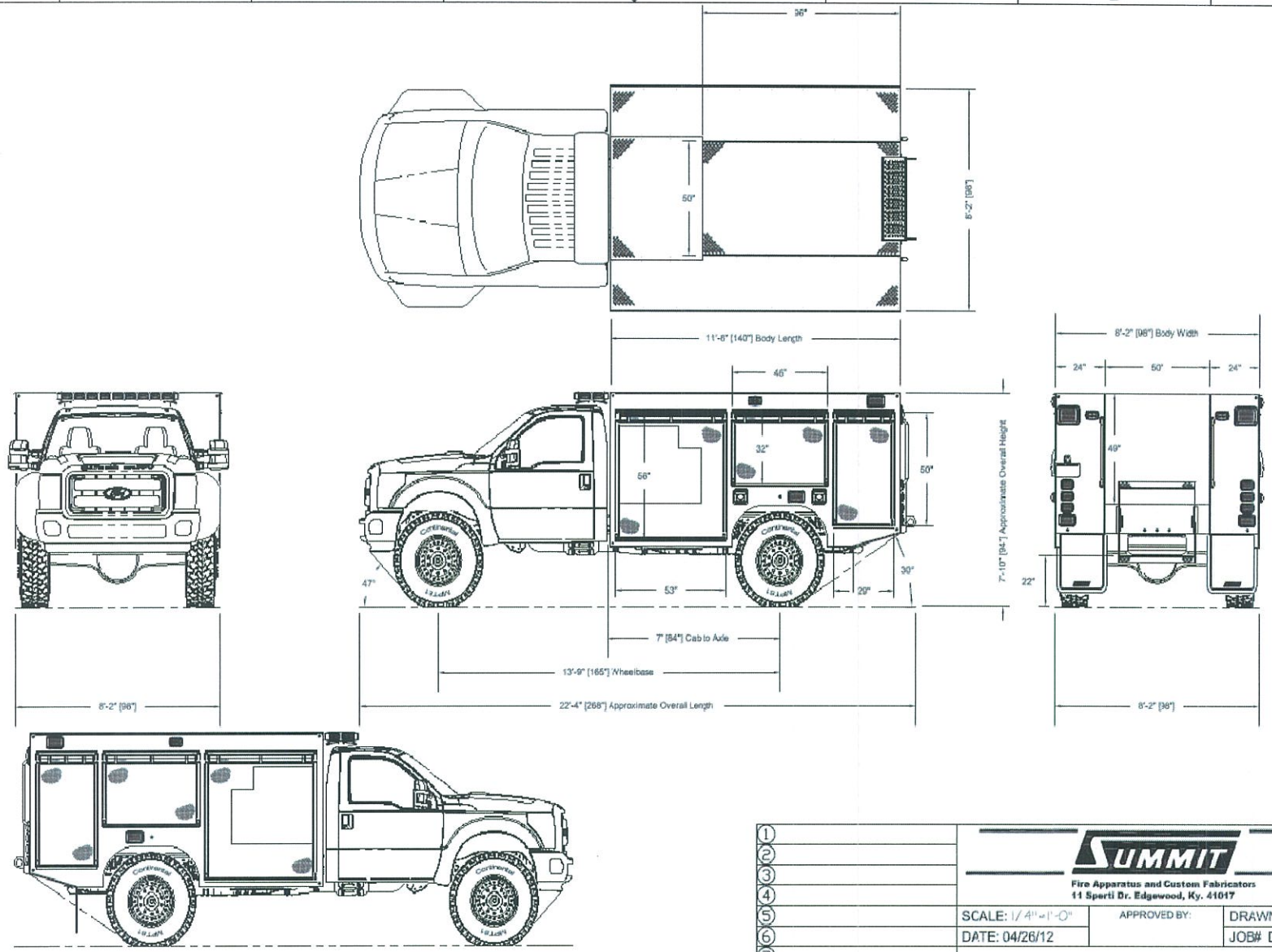

Time Modified: 11:52 A.M.
Date Modified: 5/10/2012
Date Created: 10/22/2010
Drawing File: F:\Drawings\Rescue\MiniRescue\Demo2012\DemoOR2012.dwg
Scale: 1=48

1	SUMMIT Fire Apparatus and Custom Fabricators 11 Sperti Dr. Edgewood, Ky. 41017		
2			
3			
4			
5	SCALE: 1/4"=1'-0"	APPROVED BY:	DRAWN BY: RSC
6	DATE: 04/26/12		JOB# DemoO
7	Summit Fire Apparatus		
8			
9	Demo Rescue Unit		DRAWING NUMBER DemoOR2012
REVISIONS			

SUMMIT
Fire Apparatus and Custom Fabricators

DESCRIPTION	QTY	PRICE	STD. OPT	INCLUDED OPT.
F554 HD RESCUE UTLITY		$128,800.00		
CHASSIS				
2014 Ford F-550 Chassis XL	1			
4X4 SD REGULAR CAB 165" WB DRW XL				
POWERTRAIN:				
Powerstroke 6.7L V-8 Ohv Direct Diesel Injection 32 Valve Intercooled Turbo Diesel Engine				
357 Amp Dual Alternator				
750 Amp (Total) 78 Amp Hours (Ah) (Total) Battery Dual Batteries With Run Down Protection				
Engine Block Heater				
6-Speed Electronic Selectshift Automatic Transmission With Overdrive, Lock-Up, Driver Selection				
Part-Time Four-Wheel Drive With Electronic Transfer Case Shift				
Auto Locking Hubs				
Driveline Traction Control				
Limited Slip W/4.88 Axle Ratio				
Stainless Steel Exhaust				
Hydraulic Power-Assist Re-Circulating Ball Steering				
4-Wheel Disc Brakes With Front And Rear Vented Discs				
Firm Ride Suspension				
Mono-Beam Non-Independent Front Suspension				
Front Anti-Roll Bar				
Front Coil Springs				
Hd Front Shocks				
Rigid Rear Axle				
Rear Leaf Suspension				
Rear Anti-Roll Bar				
Hd Rear Leaf Springs				
Hd Rear Shocks				
Front And Rear 19.5" X 6.00" Argent Steel Wheels				
Lt225/70Sr19.5 Bsw As Front And Rear Tires				
SAFETY				
4-Wheel Anti-Lock Braking System				
Dual Airbags, Seat Mounted Driver And Passenger Side-Impact Airbags, Curtain Overhead Airbags				
Front Height Adjustable Seatbelts				
COMFORT AND CONVENIENCE				
Air Conditioning, Underseat Ducts				
Am/Fm Stereo, Clock, Seek-Scan, 2 Speakers, Fixed Antenna				
2 12V Dc Power Outlets, Retained Accessory Power				

SUMMIT
Fire Apparatus and Custom Fabricators

DESCRIPTION	QTY	PRICE	STD. OPT	INCLUDED OPT.
F554 HD RESCUE UTLITY		$128,800.00		
Analog Instrumentation Display Includes Tachometer, Oil Pressure Gauge, Engine Temperature Gauge, Turbo/Supercharger Boost				
Warning Indicators Include Oil Pressure, Engine Temperature, Battery, Lights On, Key, Low Fuel, Door Ajar, Service Interval, Brake Fluid				
Steering Wheel With Tilt And Telescopic Adjustment				
Interior Lights Include Dome Light With Fade				
Glove Box, Front Cupholder, Instrument Panel Bin, Driver And Passenger Door Bins, Upfitter Switches				
SEATING AND INTERIOR				
Seating Capacity Of 3 * 40-20-40 Split-Bench Front Seat With Adjustable Head Restraints, Center Armrest With Storage				
4-Way Adjustable Driver Seat Includes Lumbar Support				
4-Way Adjustable Passenger Seat				
Vinyl Faced Front Seats With Vinyl Back Material				
Full Cloth Headliner, Full Vinyl/Rubber Floor Covering, Plastic/Rubber Gear Shift Knob, Chrome Interior Accents				
EXTERIOR FEATURES				
Side Impact Beams, Fully Galvanized Steel Body Material				
Black Fender Flares				
Black Front Windshield Molding				
Black Window Moldings				
Black Door Handles				
Black Grille				
2 Doors				
Trailer Harness				
Driver And Passenger Power Remote Black Heated Convex Spotter Folding Manual Extendable Trailer Outside Mirrors With Turn Signal Indicators				
Front Black Bumper With Front Tow Hooks				
Additional Exterior Lights Include Cab Clearance Lights, Underhood Light				
Clearcoat Monotone Paint				
EMISSIONS				
425 50 State Emissions				
DIMENSIONS AND CAPACITIES				
Output 300 Hp @ 2,800 Rpm Torque 660 Lb.-Ft. @ 1,600 Rpm				
1St Gear Ratio 3.974				
2Nd Gear Ratio 2.318				
3Rd Gear Ratio 1.516				
4Th Gear Ratio 1.149				
5Th Gear Ratio 0.858				
6Th Gear Ratio .0674				

Fire Apparatus and Custom Fabricators

DESCRIPTION	QTY	PRICE	STD. OPT	INCLUDED OPT.
F554 HD RESCUE UTLITY		$128,800.00		
Reverse Gear Ratio 3.128				
Gvwr 18,000 Lbs.				
Front GAWR Weight 7,000 lbs.				
Rear GAWR Weight 13,660 lbs.				
Payload 10,995 lbs.				
Front Axle Capacity 7,000 Lbs.				
Rear Axle Capacity 13,660 Lbs.				
Front Spring Rating 7,000 Lbs.				
Rear Spring Rating 13,660 Lbs.				
Front Tire/Wheel Capacity 7,500 Lbs.				
Rear Tire/Wheel Capacity 15,000 Lbs.				
Towing Capacity 16,000 Lbs.				
5Th-Wheel Towing Capacity 17,100 Lbs.				
Front Legroom 41.1 "				
Front Headroom 40.7 "				
Front Hiproom 67.6 "				
Front Shoulder Room 68.0 "				
Passenger Area Volume 65.9 Cu.Ft.				
Body Width 95.2 "				
Body Height 80.7 "				
Wheelbase 165.8 "				
Cab To Axle 84.0 "				
Axle To End Of Frame 47.6 "				
Front Tread 74.8 " Rear Tread 74.0 "				
Fuel Tank 40.0 Gal.				
SELECTED OPTIONS				
47A Ambulance Prep Pkg				
41H Engine Block Heater *Std In Ak, Co, Ia, Id, Me, Mi, Mn, Mt, Nd, Nh, Ny, Sd, Vt, Wi, Wy				
68M Payload Upgrade Pkg -Inc: Upgraded Frame, Upgraded Rear Axle, Upgraded Springs, Low Deflection/High Capacity, Increased Gvwr To 19,5000				
531 Trailer Tow Pkg -Inc: Trailer Brake Wiring Kit				
98R Operator Commanded Regeneration (Ocr)				
NFPA 2601 Chassis Upfit, Includes Vdr, Seatbelts Sensors, And Red Seat Belts In Lieu Of Grey				
CHASSIS UPFIT				
HD Dana 80 Steering Axle In Lieu Of Factory 7000lb Axle	1		x	
Rear offset hubs	2		x	
Front Fender Flares	2		x	
20"x10" Steel reversible wheels	4		x	
335 75R 20G Rated Super Single Tires	4		x	
2.5" Pan Hard Bracket	1		x	

SUMMIT
Fire Apparatus and Custom Fabricators

DESCRIPTION	QTY	PRICE	STD. OPT	INCLUDED OPT.
F554 HD RESCUE UTLITY		$128,800.00		
Replacement HD Sway Bar (Front)	1		x	
Replacement HD Sway Bar (Rear)	1		x	
Replacement 8000 lb Coil Springs	2		x	
NFPA Compliant Steps - 2 Door Cab Standard Step	1		x	
Grab Handles, Cab - Delete	1			x
Rear Tow Eyes - Painted Steel (Thru Body)	2		x	
Vehicle Data Recorder - Provided By Chassis Manufacturer	1		x	
Seatbelt Warning System - Provided By Chassis Manufacturer	1		x	
Wheels - Unfinshed (Factory Color)	1		x	
Tire Pressure Monitoring System - Valve Stem Indicators	6		x	
Rear Mud Flaps	2		x	
Fluid Identifcation Plate	1		x	
Fuel Type Label - Diesel	1		x	
Seating Label - Maximum Seating Of 2	1		x	
Vehicle Height Label	1		x	
Seatbelt Warning Label	1		x	
Riding On Step Warning Label - Rear of Body	1		x	
Helmet In Cab Warning Label	1		x	
NFPA Helmet Storage - Department To Store In Body	1		x	
BODY - 140"	1			
Body Construction - Combination Formed Sheet / Extruded	1		x	
Body Subframe - Aluminum Extruded	1		x	
Material - 190" and .160" 5052 Aluminum	1		x	
Body Mounting	1		x	
Polymer Isolation Strips - Chassis Frame	1		x	
Corrosion Protection Pkg - Anti Corrosion Compound and Nylon Spacers on All Fasteners				
Construction - Aluminum	1		x	
Enalarged Rear Wheel Opening For Larger Tire Wheel Package	1		x	
Angle Of Departure Increase	1		x	
Body Dimensions - 140" Long,66" High, 96" Wide	1		x	
Compartment Interiors - Unfinished Aluminum	1		x	
Compartment Floors - Raised Sweep-out Type	1		x	
Roof - NFPA Treadplate	1		x	
Rear Drop For Tailboard - Steel	1		x	
Rear Tail Board - 8 inch NFPA Aluminum Treadplate	1		x	
Grab Rails - Two (2) One Each Side Of Rear Compartment	1		x	
Fuel Fill, Drivers Side Rear Wheel Well (Aft) - Factory Plastic	1		x	
DEF Fill, Drivers Side Rear Wheel Well (Fore) - Factory Plastic	1		x	
RubRails - Delete	1		x	
Fenderettes - Delete	1		x	
COMPARTMENTATION				

SUMMIT
Fire Apparatus and Custom Fabricators

DESCRIPTION	QTY	PRICE	STD. OPT	INCLUDED OPT.
F554 HD RESCUE UTLITY		$128,800.00		
6-Bay With Rear Cargo Area	1		x	
Rear Cargo Area - Open (No Roof)	1		x	
Rear Cargo Area Floor - Smooth Aluminum Sheet	1		x	
Rear Cargo Area Finish - Unfinished Aluminum	1		x	
Front Compartment - Transverse	1		x	
L1 Compartment Dimensions - 53" Wide x 56" High x 23" Deep lower	1		x	
L1 Adjustable Shelf Hard ware - P100 Aluminum Unistrut	2			x
L2 Compartment Dimensions - 46" Wide x 32" High x 23" Deep	1		x	
L2 Adjustable Shelf Hard ware - P100 Aluminum Unistrut	2			x
L3 Compartment Dimensions - 29" Wide x 56" High x 23" Deep	1		x	
L3 Adjustable Shelf Hard ware - P100 Aluminum Unistrut	2			x
R1 Compartment Dimensions - 53" Wide x 56" High x 23" Deep Lower (Transverse Upper)	1		x	
R1 Adjustable Shelf Hard ware - P100 Aluminum Unistrut	2			x
R2 Compartment Dimensions - 46" Wide x 32" High x 23" Deep	1		x	
R2 Adjustable Shelf Hard ware - P100 Aluminum Unistrut	2			x
R3 Compartment Dimensions - 29" Wide x 56" High x 23" Deep	1		x	
R3 Adjustable Shelf Hard ware - P100 Aluminum Unistrut	2			x
Rear Cargo Area Dimensions - 48" Wide x 48" High x 78" Deep	1		x	
Adjustable Shelf Hardware, Rear Cargo Area- Delete	1		x	
Compartment Doors - Hansen Roll Up Doors	6		x	
Door Finish - Brushed	1		x	
Top Seal - Drip Rail With Wiper	1		x	
Internal Drip Pans - Delete	1		x	
Door Locks - Delete	1		x	
BODY UPFIT				
Drop Down Step To Access Cargo Area	1		x	
12 VOLT ELECTRICAL REQUIRMENTS				
12 Volt Elctrical System - Non Multiplex System	1		x	
Wiring Requirments - NFPA 1901	1		x	
SAE Practices & FMVSS Compliant	1		x	
Wiring - GXL Stranded Copper	1		x	
12V Dc Voltage Output Testing & Documentation	1		x	
Switch Panel - Ford Auxiliary Switches - One Master Switch Warning	1		x	
Reserve Capacity Test:	1		x	
Alternator Performance Test At Idle:	1		x	
Alternator Performance Test At Full Load:	1		x	
Low Voltage Alarm Test:	1		x	
Documentation - NFPA Test Results	1		x	
Battery Disconnect Switch - Solenoid Activated From Ignition Switch	1		x	
Battery Light - Green L.E.D. Dash Mounted	1		x	
Clearance / Marker Lights - Tecniq P2 L.E.D	21		x	

SUMMIT
Fire Apparatus and Custom Fabricators

DESCRIPTION	QTY	PRICE	STD. OPT	INCLUDED OPT.
F554 HD RESCUE UTLITY		$128,800.00		
License Plate Bracket and Light - Arrow	1		x	
Brake Lights, - Tecniq K60 Red L.E.D.	2		x	
Turn Lights - Tecniq K60 Amber L.E.D.	2		x	
Backup Lights - Tecniq K60 Clear L.E.D.	2		x	
Light Cluster Housing - Chrome	2		x	
Engine Compartment Light - Grote 61491-5 Switched	1		x	
Ground Area Lighting 2 Door Cab - Tecniq L.E.D	2		x	
Ground Area Lighting Body - Tecniq L.E.D	2		x	
Rear Cargo Area Light - TecNiq	1		x	
Compartment Lighting - TecNiq L.E.D Single Dome	7			
Compartment Ajar Light - Weldon LED	1			
Low Voltage Alarm	1		x	
Battery Charging Receptacle -	1		x	
Light Bar - Whelen 55" Freedom L.E.D.	1		x	
Blocking Right Away	1		x	
Lower Zone A Warning Lights - Whelen M2 Series L.E.D.	4		x	
Lower Zone A Warning Light Chrome Flange - Whelen M2FC flange	4		x	
Lower Zone B&D Intersection Lights - Whelen M2 Series L.E.D	2		x	
Lower Zone B&D Intersection Light Chrome Flange - Whelen M2FC fl	2		x	
Lower Zone B&D Rear Warning Lights - Whelen 600 Series	2		x	
Lower Zone B&D Rear Warning Light Chrome Flange - Whelen 6Eflar	2		x	
Lower Zone C Warning Lights - Whelen 600 Series	2		x	
Upper Zone B & D Warning Lights - Whelen 600 Series	2		x	
Upper Zone B & D Warning Light Chrome Flange - Whelen 6Eflange	2		x	
Upper Zone C Warning Lights - Whelen 600 Series	2		x	
Upper Zone C Warning Light Chrome Flange - Whelen 6Eflange	2		x	
Electronic Siren - Whelen 295SLSA1	1		x	
Siren Speaker - Code 3 PB100B	1		x	
PAINTING AND STRIPING				
Undercoating - Delete	1		x	
PPG Two Stage Urthane - Body Job Color	1		x	
NFPA Perimeter - 4" White Reflective Cab	1		x	
NFPA Perimeter - 4" White Reflective Body	1		x	
NFPA Chevron 6' Red/Amber Reflective - Body Only (No Rear Door)	1		x	
WARRANTIES				
Limited Warranty (1-Year)	1		x	
Paint Warranty (7-Year)	1		x	
Electrical Warranty (5-Year)	1		x	
Body Structural Warranty (10-Year)	1		x	
140 " ERB OPTIONS LIST:				

SUMMIT
Fire Apparatus and Custom Fabricators

DESCRIPTION	QTY	PRICE	STD. OPT	INCLUDED OPT.
F554 HD RESCUE UTLITY		$128,800.00		
POPULAR CHASSIS OPTIONS: FORD				
Super Cab (Extend Cab) In Lieu Of The 2 Door Cab.		$2,000.00		
Crew Cab (Extend Cab) In Lieu Of The 2 Door Cab.		$3,000.00		
Limited Slip Rear Axle		$360.00		
PTO Provision		$280.00		
Electronic Shift on the Fly		$215.00		
Electronic Brake Controller		$285.00		
Power Equipment Group -Reg. Cab		$895.00		
Power Equipment Group - Crew Cab		$1,105.00		
XL Value Group		$225.00		
F554 OPTIONS:				
20" x 10" Aluminum powder coated black wheels		$4,320.00		
Polished Wheel		$450.00		
Run Flat & Bead Lock system		$1,400.00		
Twin Caliper Front Brake Assembly		$1,700.00		
PAINT:				
Repaint chassis - close door (2 door)		$3,090.00		
Repaint chassis - close door (4 door)		$3,870.00		
Painting Two -Tone (lower half F1 red upper white)		$1,900.00		
Painting Jambs and under hood in addition to paint (2 Door)		$600.00		
Painting Jambs and under hood in addition to paint (4 Door)		$1,200.00		
Painted Steel Wheels to Job Color		$460.00		
CHASSIS ACCESSORIES:				
NFPA Complaint Full Punch Raised treadplate running boards In Lieu of Base Step		$425.00		
Center Console for radio & siren - Treadplate Aluminum (No Storage)		$775.00		
Center Consolefor radio & siren - Smooth Aluminum (No Storage)		$720.00		
Book / Binder Misc Storage for console		$400.00		
Rubberized coating for console		$260.00		
Switch Panel in console in lieu of Ford Auxiliary		$210.00		
Raised or Angled switch panel on console		$115.00		
Trailer Hitch - 2" Class 4 receiver (includes 4 way plug)		$990.00		
Seven way trailer plug in lieu of 4 way		$70.00		
Warn Powder Coat Steel Front Winch Mount / Brush Guard w/ receiver		$1,730.00		
Powder Coat Steel Front Head Light Guards		$380.00		
Warn Stainless Steel Front Winch Mount / Brush Guard w/ receiver		$2,280.00		

11 Sperti Drive, Edgewood, KY 41017
(859)331-0360
FAX: (859)331-0399

SUMMIT
Fire Apparatus and Custom Fabricators

DESCRIPTION	QTY	PRICE	STD. OPT	INCLUDED OPT.
F554 HD RESCUE UTLITY		$128,800.00		
Stainless Steel Front Head Light Guards		$450.00		
Heavy Duty Hammer tone winch ready Bumper with driving light cut outs		$1,900.00		
Heavy Duty Hammer tone 1/4" plate Grille and brush guards		$560.00		
Heavy Duty Polished Stainless Steel Grille and Brush Guards		$1,187.00		
Portable 9500 lb Winch with wireless remote		$1,235.00		
Fixed Warn 12,000 lb Winch with wireless remote		$1,305.00		
Fixed Warn 15,000 lb Winch with wireless remote		$1,600.00		
Stainless Steel Wheel Simulators		$605.00		
BODY OPTIONS:				
Enclosed Rear Cargo Area With Rear Roll Up Door		$1,800.00		
96" Deep Rear Cargo Area (Transverse Compartment 38" wide and not 53")		$200.00		
Full Depth Rear Compartment (No Transverse Front Compartments)		-$275.00		
Roll Up Rear Hose Bed Cover		$5,800.00		
Increased Angle of Departure		$400.00		
Body height even with or lower than cab (shorten height)		$1,500.00		
ROM doors in lieu of Hansen		$560.00		
Rear Tailgate (No Rear Cargo Enclosure)		$810.00		
L3 & R3 Wire Covers (protect wiring)		$250.00		
Fuel Fill, Drivers Side Rear Wheel Well (Aft) - Cast Aluminum		$58.00		
DEF Fill, Drivers Side Rear Wheel Well (Fore) - Cast Aluminum		$56.00		
Aluminum Extruded RubRails		$780.00		
Polished Stainless Steel Fenderettes With full Wheel Well Liners		$985.00		
STORAGE OPTIONS:				
SCBA Spare Bottle Storage - Two (2) Passenger Side Cast Aluminum Access Doors		$560.00		
L1/R1 floor extension (extend transverse center floor out to door) each		$160.00		
Swing Door Enclosure Below Floor Extension		$230.00		
Adjustable Shelf (22" Deep)		$200.00		
Adjustable Slide Tray (22" Deep, 250lb rated)		$555.00		
Roll Out / Tilt Down Tray (22" Deep)		$725.00		
Heavy Slide Tray (600 LB Rated) - Floor Mounted		$650.00		
Heavy Slide Tray (1000 LB Rated) -Floor Mounted		$680.00		
Heavy Slide Tray For Rear Cargo Area (1000 LB Rated)		$1,580.00		
Roll Out Tool Board		$750.00		
Full Height Compartment Divider		$480.00		

11 Sperti Drive, Edgewood, KY 41017
(859)331-0360
FAX: (859)331-0399

SUMMIT
Fire Apparatus and Custom Fabricators

DESCRIPTION	QTY	PRICE	STD. OPT	INCLUDED OPT.
F554 HD RESCUE UTLITY		$128,800.00		
PUMP OPTIONS				
200 Gallon Poly Tank & Skid, 11 or 13 HP Gasoline Engine Pump, Painted Steel Pipe Manifold, 1/4 Industrial Valves, 1.5" Preconnect W/ Hose Trough, Hannay Booster Reel W/100' of 1", 1.5" Rear Discharge,Installed in Body		$11,200.00		
200 Gallon Poly Tank & Skid, 18 HP Gasoline engine Pump, Painted Steel Pipe Manifold, 1/4 Industrial Valves, 1.5" Preconnect W/ Hose Trough, Hannay Booster Reel W/100' of 1", 1.5" Rear Discharge, Installed In Body		$14,090.00		
250 Gallons Of Water In lieu Of 200		$200.00		
300 Gallons Of Water In Lieu Of 200		$350.00		
Raised Aluminum Skid with Under Skid Storage In Lieu Of Poly		$1,275.00		
Stainless Steel Manifold And Akron Valves		$1,100.00		
Around The Pump Foam System and 20 Gallon Foam Cell		$1,375.00		
Electric Power From Chassis In Lieu Of Battery		$400.00		
12 VOLT ELECTRICAL OPTIONS				
Kussmaul Battery Conditioner with Auto Eject inlieu of plug		$1,130.00		
Driving Lights in HD bumper option		$450.00		
LED Strip lighting in lieu of single LED compartment light		$1,300.00		
Additional LED Light on Cargo Area Bulkhead		$125.00		
Additional LED Strip Light in Transverse Compartment		$170.00		
LED Ground lights under front of body		$275.00		
LED Ground light under front bumper		$205.00		
LED Browlight on front of cab		$1,550.00		
Whelen TAM85 46" Traffic Advisor - Requires Rear Compartment Enclosure		$1,530.00		
12 Volt TecNiq K70 LED Clear Scene Lights - Two (2), One on Each body Side		$660.00		
12 Volt TecNiq K70 LED Clear Scene Lights - Four (4), One on Each Body Side, Two on Rear		$1,190.00		
12 Volt TecNiq K70 LEDClear Scene Lights - Six (6), Two on Each Body Side, Two on Rear		$1,480.00		
12 Volt Whelen M6 Series LED Clear Scene Lights - Two (2), One on Each Body Side		$700.00		
12 Volt Whelen M6 Series LED Clear Scene Lights - Four (4), One on Each Body Side, Two on Rear		$1,270.00		
12 Volt Whelen M6 Series LED Clear Scene Lights - Six (6), Two on Each Body Side, Two on Rear		$1,600.00		
12 Volt Whelen 600 Series LED Clear Scene Lights - Two (2), One on Each Body Side		$600.00		
12 Volt Whelen 600 Series LED Clear Scene Lights - Four (4), One on Each Body Side, Two on Rear		$1,070.00		

11 Sperti Drive, Edgewood, KY 41017
(859)331-0360
FAX: (859)331-0399

SUMMIT
Fire Apparatus and Custom Fabricators

DESCRIPTION	QTY	PRICE	STD. OPT	INCLUDED OPT.
F554 HD RESCUE UTLITY		$128,800.00		
12 Volt Whelen 600 Series LED Clear Scene Lights - Six (6), Two on Each Body Side, Two on Rear		$1,300.00		
12 Volt Whelen 600 Series Halogen Clear Scene Lights - Two (2),		$430.00		
12 Volt Whelen 600 Series Halogen Clear Scene Lights - Four (4), One on Each Body Side, Two on Rear		$720.00		
12 Volt Whelen 600 Series Halogen Clear Scene Lights - Six (6), Two on Each Body Side, Two on Rear		$905.00		
12 Volt Whelen Pioneer 3000 Push Up Lights - Two (2) Mounted on Body		$2,720.00		
12 Volt FRC Spectra 900 LED Clear Scene Lights - Two (2), One on Each Body Side		$1,100.00		
12 Volt FRC Spectra 900 LED Clear Scene Lights - Four (4), One on Each Body Side, Two on Rear		$2,062.00		
12 Volt FRC Spectra 900 LED Clear Scene Lights - Six (6), Two on Each Body Side, Two on Rear		$2,952.00		
12 Volt FRC Evolution LED FCA530-V08 Push Up Lights - Two (2) Mounted on Body		$2,594.00		
120 / 240 VOLT ELECTRICAL:				
5000 W Gasoline Powered Honda Generator - Mounted on slide tray (Elec Start)		$4,200.00		
5000 W Gasoline Powered Generator - Mounted on slide tray (Elec Start)		$2,800.00		
3000 W Baldor Diesel Generator Mounted on slide tray (Elec Start)		$4,200.00		
5500 W Baldor Diesel Generator Mounted on slide tray (Elec Start)		$5,450.00		
120/240 Volt load center with up to 4 breakers & pigtail for genertaor		$750.00		
Fuel Tap from chassis (Diesel)		$610.00		
8000 KW Smart Power Hydraulic generator w/ load center		$16,910.00		
Compartment 120 volt 20 amp receptacle (each)		$175.00		
External 240 volt compartment receptacle		$275.00		
External 120 volt receptacle		$210.00		
PAINT:				
Two Tone Chassis - Two Door		$2,810.00		
Two Tone Chassis - Four Door		$3,210.00		
Painting Jambs and under hood in addition to paint (2 Door)		$600.00		
Painting Jambs and under hood in addition to paint (4 Door)		$1,200.00		
Two Tone Body		$2,550.00		
Painted Steel Wheels to Job Color		$460.00		
Body Undercoating		$415.00		
Painted Roll Up Doors In Lieu of Brushed		$1,200.00		

SUMMIT
Fire Apparatus and Custom Fabricators

DESCRIPTION	QTY	PRICE	STD. OPT	INCLUDED OPT.
F554 HD RESCUE UTLITY		$128,800.00		
Rubberized Spray Coated Rear Cargo Area (9' body)		$680.00		
Rubberized Spray Coated Rear Cargo Area (12' body)		$730.00		
STRIPING & LETTERING:				
NFPA Perimeter Stripe 4"		$730.00		
1- 4 -1 NFPA Perimeter Stripe 4" with 1" stripe above and below		$900.00		
Z pattern in stripe		$150.00		
Sixty 3" Reflective Lettering		$575.00		

11 Sperti Drive, Edgewood, KY 41017
(859)331-0360
FAX: (859)331-0399

SUMMIT

Fire Apparatus and Custom Fabricators

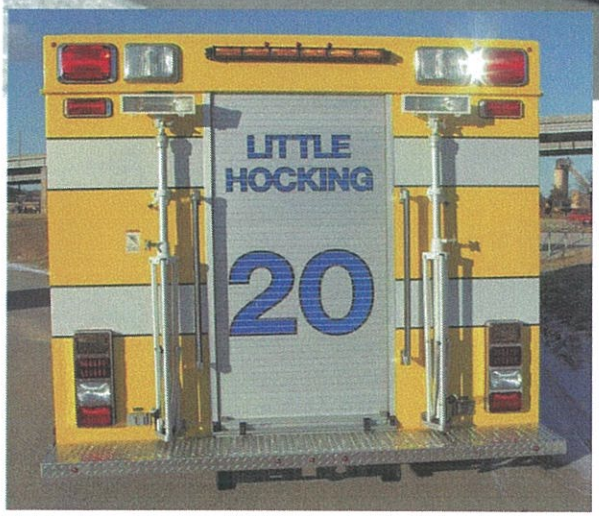

CUSTOM DESIGN IS OUR SPECIALTY, QUALITY IS OUR COMMITMENT!

11 Sperti Drive Edgewood, KY 41017 (859) 331-0360 www.SummitFireApparatus.com

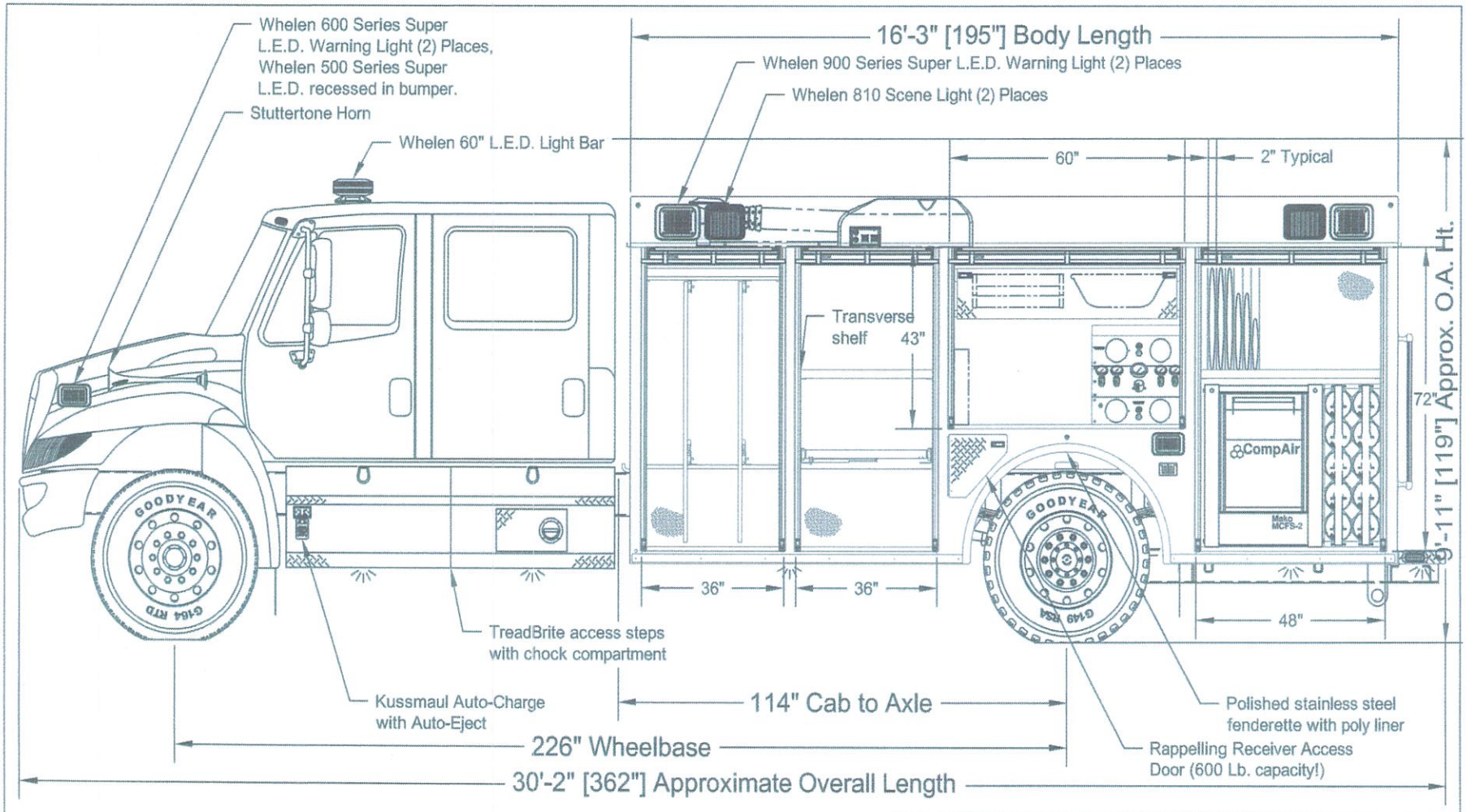

Left Side View

Time Modified: 6:29 A.M.
Date Modified: 10/10/2008
Date Created: 8/27/2008
Drawing File: F:\Drawings\Rescue\Rolldoor\Belpre\25084001.dwg
Scale: 1=24

1	Change Order 09/16/08
2	
3	
4	
5	
6	
7	
8	
9	

REVISIONS

SUMMIT
Fire Apparatus and Custom Fabricators
11 Sperti Dr. Edgewood, Ky. 41017

SCALE:1/2"=1'-0"	APPROVED BY:	DRAWN BY:RSC
DATE:08/27/08		JOB#25084

Belpre Township F.D.

Rescue Unit

DRAWING NUMBER 25084001

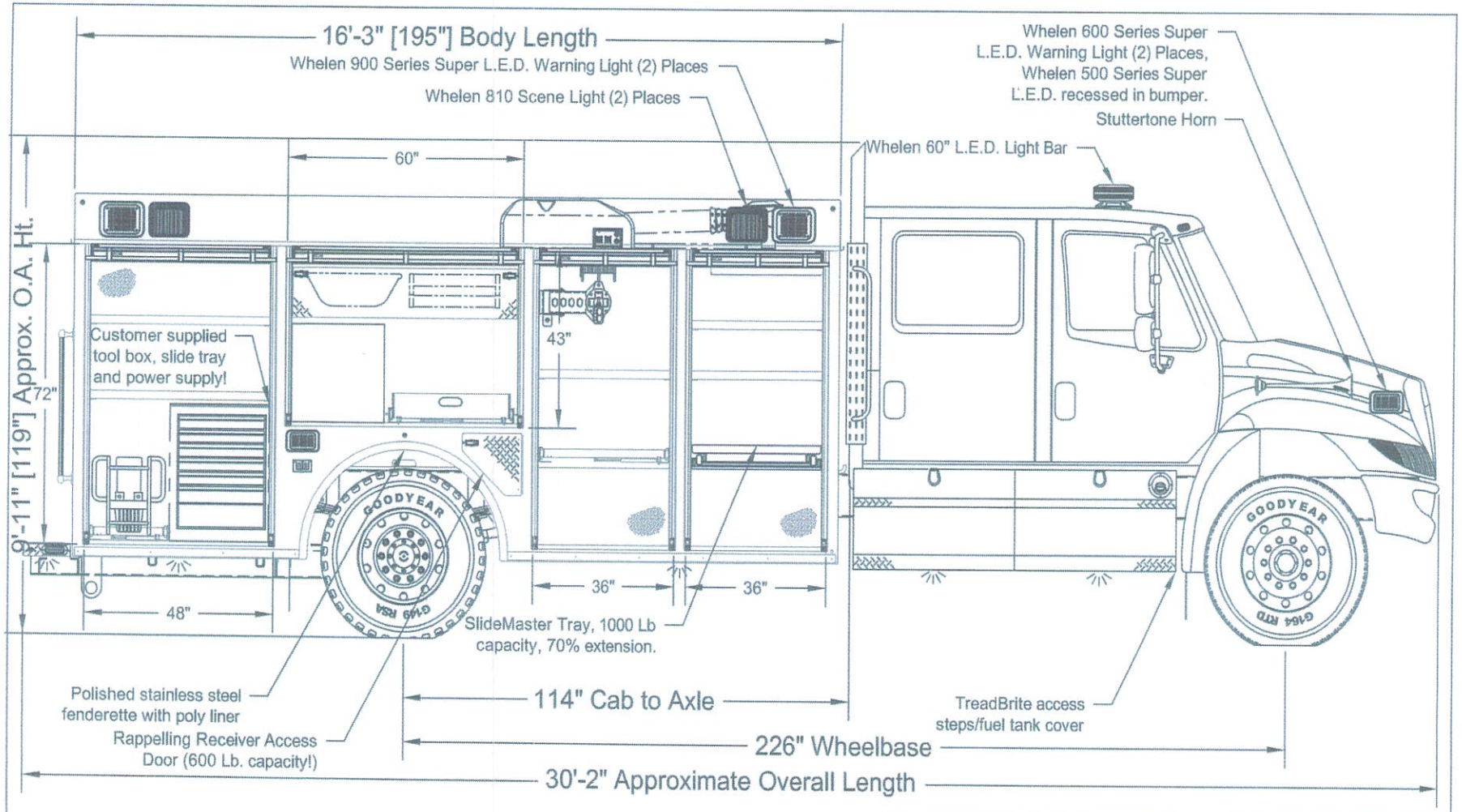

Right Side View

Time Modified: 6:29 A.M.
Date Modified: 10/10/2008
Date Created: 8/27/2008
Drawing File: F:\Drawings\Rescue\Rolldoor\Belpre\25084002.dwg
Scale: 1=24

1	Change Order 09/16/08
2	
3	
4	
5	
6	
7	
8	
9	
	REVISIONS

SUMMIT
Fire Apparatus and Custom Fabricators
11 Sperti Dr. Edgewood, Ky. 41017

SCALE: 1/2"=1'-0"	APPROVED BY:	DRAWN BY: RSC
DATE: 08/27/08		JOB# 25084

Belpre Township F.D.

Rescue Unit

DRAWING NUMBER 25084002

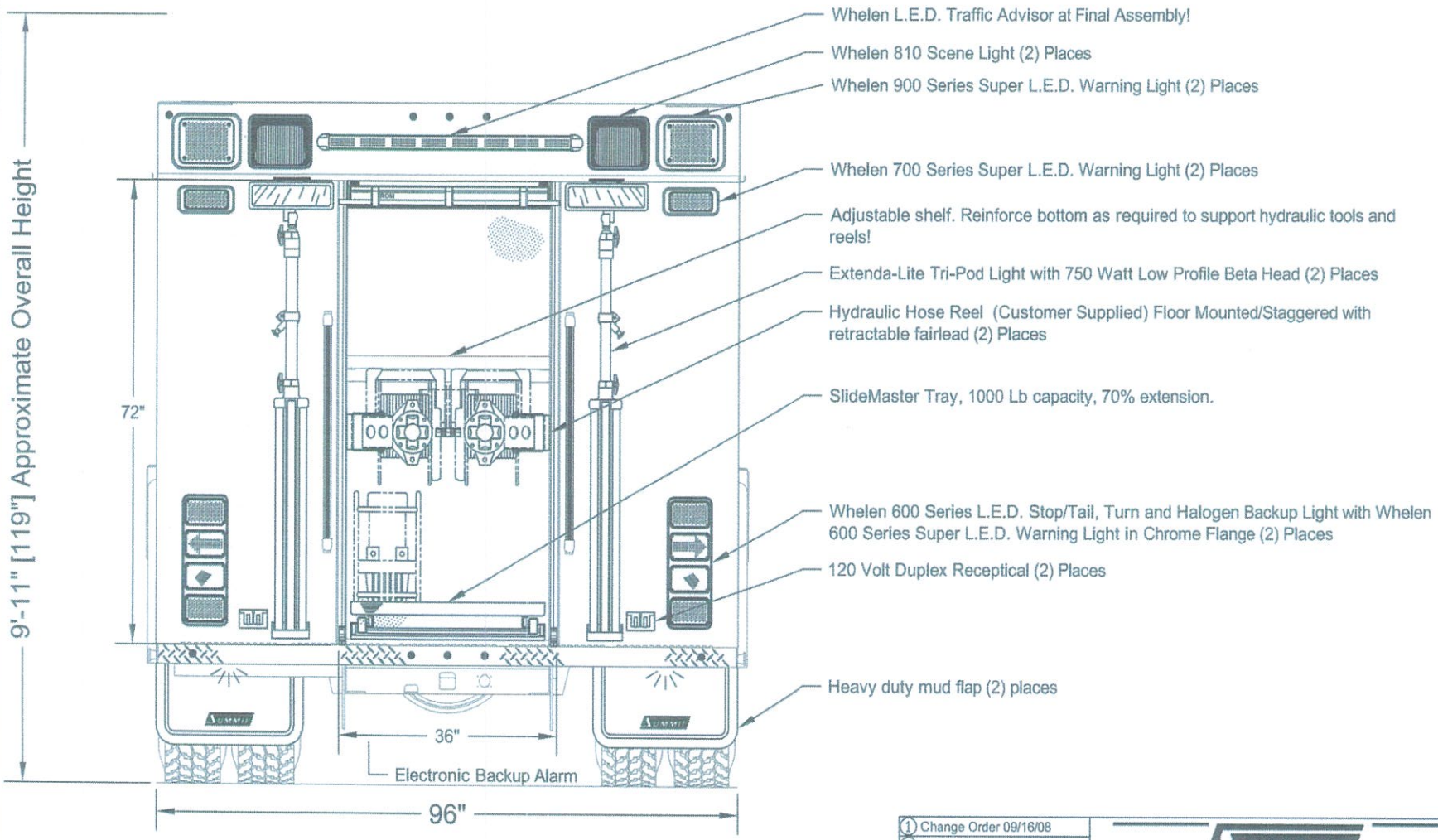

Rear View

Time Modified: 6:29 A.M.
Date Modified: 10/10/2008
Date Created: 8/27/2008
Drawing File: F:\Drawings\Rescue\Rolldoor\Belpre\25084003.dwg
Scale: 1=16

1	Change Order 09/16/08
2	
3	
4	
5	
6	
7	
8	
9	
	REVISIONS

SUMMIT
Fire Apparatus and Custom Fabricators
11 Sperti Dr. Edgewood, Ky. 41017

SCALE:3/4"=1'-0"	APPROVED BY:	DRAWN BY:RSC
DATE:08/27/08		JOB#25084

Belpre Township F.D.

Rescue Unit

DRAWING NUMBER 25084003

Fire Apparatus and Custom Fabricators

DESCRIPTION	QTY	PRICE	STD. OPT.	INCLUDED OPT.
SUMMIT COMMERCIAL CAB RESCUE		$185,600.00		
CHASSIS - 4 DOOR				
Freigtliner M2 106 Conventional Chassis	1			
2015 Model Year Specified				
Set Back Axle - Truck				
Straight Truck Provision				
Lh Primary Steering Location				
Domiciled, Usa 50 States (Including California And Carb Opt-In States)				
Rescue And Emergency Service				
Emergency Vehicles Business Segment				
Fixed Load Commodity				
Terrain/Duty: 100% (All) Of The Time, In Transit, Is Spent On Paved Roads				
Maximum 8% Expected Grade				
Smooth Concrete Or Asphalt Pavement - Most Severe In-Transit (Between Sites) Road Surface				
Medium Truck Warranty				
Expected Front Axle(S) Load : 12000.0 Lbs				
Expected Rear Drive Axle(S) Load : 21000.0 Lbs				
Expected Gross Vehicle Weight Capacity : 33000.0 Lbs				
Rescue - Straight (Non Drop) Frame No Main Driveline Driven Split-Shaft Pto				
Expected Body/Payload Cg Height Above Frame "Xx" Inches : 32.0 In				
Cum Isb 6.7-300 300 Hp @ 2600 Rpm, 2600 Gov, 660 Lb/Ft @ 1600 Rpm				
65 Mph Road Speed Limit				
Cruise Control Speed Limit Same As Road Speed Limit				
Pto Mode Engine Rpm Limit - 1100 Rpm				
Pto Rpm With Cruise Set Switch - 700 Rpm				
Pto Rpm With Cruise Resume Switch - 800 Rpm				
Pto Mode Cancel Vehicle Speed - 5 Mph				
Pto Governor Ramp Rate - 250 Rpm Per Second				
Pto Minimum Rpm - 700				
Regen Inhibit Speed Threshold - 5 Mph				
2013 Onboard Diagnostics/2010 Epa/Carb/Ghg14				
2008 Carb Emission Certification - Exempted Vehicle; No Clean Idle Label Required				
Standard Oil Pan				

Fire Apparatus and Custom Fabricators

DESCRIPTION	QTY	PRICE	STD. OPT.	INCLUDED OPT.
SUMMIT COMMERCIAL CAB RESCUE		$185,600.00		
Engine Mounted Oil Check And Fill				
One Piece Valve Cover				
Side Of Hood Air Intake With Nfpa Compliant Ember Screen And Fire Retardant Donaldson Air Cleaner				
Ln 12V 270 Amp 4949Pgh Pad Mount Alternator With Ac Taps				
Cca Threaded Stud Batteries				
Battery Box Frame Mounted				
Standard Battery Jumpers				
Single Battery Box Frame Mounted Lh Side Under Cab				
Wire Ground Return For Battery Cables With Additional Frame Ground Return				
Non-Polished Battery Box Cover				
Cummins Turbocharged 18.7 Cfm Air Compressor With Internal Safety Valve				
Standard Air Compressor Governor				
Air Compressor Discharge Line				
Gvg, Fire And Emergency Service Vehicles Engine Warning				
Rh Outboard Under Step Mounted Horizontal Aftertreatment System Assembly With Rh Horizontal Tailpipe				
Engine Aftertreatment Device, Automatic Over The Road Active Regeneration And Dash Mounted Single Regeneration Request/Inhibit Switch				
Standard Exhaust System Length				
Rh Standard Horizontal Tailpipe				
6 Gallon Diesel Exhaust Fluid Tank				
100 Percent Diesel Exhaust Fluid Fill				
Lh Medium Duty Standard Diesel Exhaust Fluid Tank Location				
Standard Diesel Exhaust Fluid Pump Mounting				
Standard Diesel Exhaust Fluid Tank Cap				
Horton Ht650 Frontal Air On/Off Engine Fan Clutch				
Automatic Fan Control Without Dash Switch, Non Engine Mounted				
Cummins Spin On Fuel Filter				
Full Flow Oil Filter				
950 Square Inch Aluminum Radiator				
Antifreeze To -34F, Noat Extended Life Coolant				
Gates Blue Stripe Coolant Hoses Or Equivalent				
Constant Tension Hose Clamps For Coolant Hoses				
Radiator Drain Valve				
Lower Radiator Guard				

11 Sperti Drive, Edgewood, KY 41017
(859)331-0360
FAX: (859)331-0399

Fire Apparatus and Custom Fabricators

DESCRIPTION	QTY	PRICE	STD. OPT.	INCLUDED OPT.
SUMMIT COMMERCIAL CAB RESCUE		$185,600.00		
Aluminum Flywheel Housing				
Electric Grid Air Intake Warmer				
Delco 12V 29Mt Starter With Integrated Magnetic Switch				
Allison 3000 Evs Automatic Transmission With Pto Provision				
Allison Vocational Package 227 - Available On 3000/4000 Product Families With Vocational Model Evs				
Allison Vocational Rating For Fire Truck/Emergency Vehicle Applications Available With All Product Families				
Primary Mode Gears, Lowest Gear 1, Start Gear 1, Highest Gear 6, Available For 3000/4000 Product Families Only				
Secondary Mode Gears, Lowest Gear 1, Start Gear 1, Highest Gear 6, Available For 3000/4000 Product Families Only				
Vehicle Interface Wiring With Body Builder Connector Mounted Back Of Cab				
Customer Installed Chelsea 277 Series Pto				
Pto Mounting, Lh Side Of Main Transmission				
Magnetic Plugs, Engine Drain, Transmission Drain, Axle(S) Fill And Drain				
Push Button Electronic Shift Control, Dash Mounted				
Transmission Prognostics - Enabled 2013				
Water To Oil Transmission Cooler, In Radiator End Tank				
Transmission Oil Check And Fill With Electronic Oil Level Check				
Synthetic Transmission Fluid (Tes-295 Compliant)				
Detroit Da-F-12.0-3 12,000# Ff1 71.5 Kpi/3.74 Drop Single Front Axle				
Bendix 16.5X5D Es Cast Spider Cam Front Brakes, Single Anchor, Fabricated Shoes				
Fire And Emergency Severe Service, Non-Asbestos Front Lining				
Conmet Cast Iron Front Brake Drums				
Skf Scotseal Plus Xl Front Oil Seals				
Vented Front Hub Caps With Window, Center And Side Plugs - Oil				
Standard Spindle Nuts For All Axles				
Bendix Versajust Automatic Front Slack Adjusters				
Trw Thp-60 Power Steering				
Power Steering Pump				
2 Quart See Through Power Steering Reservoir				
Organic Sae 80/90 Front Axle Lube				

11 Sperti Drive, Edgewood, KY 41017
(859)331-0360
FAX: (859)331-0399

Fire Apparatus and Custom Fabricators

DESCRIPTION	QTY	PRICE	STD. OPT.	INCLUDED OPT.
SUMMIT COMMERCIAL CAB RESCUE		$185,600.00		
12,000# Dual Taperleaf Front Suspension				
Maintenance Free Rubber Bushings - Front Suspension				
Front Shock Absorbers				
Detroit Da-Rs-21.0-4 21,000# R-Series Single Rear Axle				
5.22 Rear Axle Ratio				
Iron Rear Axle Carrier With Standard Axle Housing				
Mxl 16T Meritor Extended Lube Main Driveline With Half Round Yokes				
Bendix 16.5X7D Es Cast Spider Cam Rear Brakes, Single Anchor				
Fire And Emergency Severe Service Non-Asbestos Rear Brake Lining				
Brake Cams And Chambers On Forward Side Of Drive Axle(S)				
Conmet Cast Iron Rear Brake Drums				
Skf Scotseal Plus Xl Rear Oil Seals				
Haldex Goldseal Longstroke 1-Drive Axle Spring Parking Chambers				
Bendix Versajust Automatic Rear Slack Adjusters				
Organic Sae 80/90 Rear Axle Lube				
21,000# 52 Inch Variable Rate Multi-Leaf Spring Rear Suspension With Leaf Spring Helper				
Spring Suspension - No Axle Spacers				
Standard U-Bolt Pad				
Air Brake Package				
Wabco 4S/4M Abs With Traction Control				
Reinforced Nylon, Fabric Braid And Wire Braid Chassis Air Lines				
Fiber Braid Parking Brake Hose				
Standard Brake System Valves				
Standard Air System Pressure Protection System				
Std U.S. Front Brake Valve				
Relay Valve With 5-8 Psi Crack Pressure, No Rear Proportioning Valve				
No Brake Line Air Dryer				
Steel Air Brake Reservoirs				
Pull Cable On Wet Tank, Petcock Drain Valves On All Other Air Tanks				
Upgraded Chassis Multiplexing Unit				
Upgraded Bulkhead Multiplexing Unit				

11 Sperti Drive, Edgewood, KY 41017
(859)331-0360
FAX: (859)331-0399

Fire Apparatus and Custom Fabricators

DESCRIPTION	QTY	PRICE	STD. OPT.	INCLUDED OPT.
SUMMIT COMMERCIAL CAB RESCUE		$185,600.00		
6450Mm (254 Inch) Wheelbase				
11/32X3-1/2X10-3/16 Inch Steel Frame (8.73Mmx258.8Mm/0.344X10.19 Inch) 120Ksi				
1600Mm (63 Inch) Rear Frame Overhang				
Frame Overhang Range: 61 Inch To 70 Inch				
Calc'D Back Of Cab To Rear Susp C/L (Ca) : 141.2 In				
Calculated Effective Back Of Cab To Rear Suspension C/L (Ca) : 138.2 In				
Calc'D Frame Length - Overall : 346.39				
Calc'D Space Available For Deckplate : 141.2 In				
Calculated Frame Space Lh Side : 155.67 In				
Calculated Frame Space Rh Side : 197.91 In				
Square End Of Frame				
Front Closing Crossmember				
Standard Weight Engine Crossmember				
Standard Midship #1 Crossmember(S)				
Standard Rearmost Crossmember				
Standard Suspension Crossmember				
Three-Piece 14 Inch Chromed Steel Bumper With Collapsible Ends				
Front Tow Hooks - Frame Mounted				
Bumper Mounting For Single License Plate				
Fender And Front Of Hood Mounted Front Mudflaps				
Grade 8 Threaded Hex Headed Frame Fasteners				
50 Gallon/189 Liter Rectangular Aluminum Fuel Tank - Lh				
Rectangular Fuel Tank(S)				
Plain Aluminum/Painted Steel Fuel/Hydraulic Tank(S) With Painted Bands				
Fuel Tank(S) Forward				
Plain Step Finish				
Fuel Tank Cap(S)				
Alliance Fuel Filter/Water Separator With Heated Bowl And Primer Pump				
Equiflo Inboard Fuel System				
High Temperature Reinforced Nylon Fuel Line				
Goodyear G662 Rsa Fuel Max 295/75R22.5 14 Ply Radial Front Tires (Match Marked)				
Goodyear G572A Lhd Fuel Max 295/75R22.5 14 Ply Radial Rear Tires				
Conmet Pre-Set Bearing Iron Front Hubs				

Fire Apparatus and Custom Fabricators

DESCRIPTION	QTY	PRICE	STD. OPT.	INCLUDED OPT.
SUMMIT COMMERCIAL CAB RESCUE		$185,600.00		
Conmet Pre-Set Bearing Iron Rear Hubs				
Accuride 29637 Accu-Lite 22.5X8.25 10-Hub Pilot 6.16 Inset 10-Hand Steel Disc Front Wheels				
Accuride 29637 Accu-Lite 22.5X8.25 10-Hub Pilot 10-Hand Steel Disc Rear Wheels				
Front Wheel Mounting Nuts				
Rear Wheel Mounting Nuts				
154 Inch Bbc High-Roof Aluminum Conventional Crew Cab				
Rubber Cab Mounts				
Painted Plastic Grille				
Argent Silver Hood Mounted Air Intake Grille				
Fiberglass Hood				
Valve And Plumbing For Customer Furnished Air Horn, Piping Capped At Firewall				
Single Electric Horn				
Door Locks And Ignition Switch Keyed The Same				
Rear License Plate Mount End Of Frame				
Integral Headlight/Marker Assembly				
(5) Amber Marker Lights				
Integral Stop/Tail/Backup Lights				
Standard Front Turn Signal Lamps				
Dual West Coast Molded-In Color Mirrors				
Door Mounted Mirrors				
102 Inch Equipment Width				
Lh And Rh 8 Inch Molded-In Color Convex Mirrors Mounted Under Primary Mirrors				
Standard Side/Rear Reflectors				
63X14 Inch Tinted Rear Window				
Tinted Door Glass Lh And Rh With Tinted Non-Operating Wing Windows				
Manual Door Window Regulators				
Tinted Windshield				
2 Gallon Windshield Washer Reservoir Without Fluid Level Indicator, Frame Mounted				
Opal Gray Cloth Interior				
Molded Plastic Door Panel				
Molded Plastic Door Panel				
Black Mats With Single Insulation				
Forward Roof Mounted Console With Upper Storage Compartments Without Netting				

Fire Apparatus and Custom Fabricators

DESCRIPTION	QTY	PRICE	STD. OPT.	INCLUDED OPT.
SUMMIT COMMERCIAL CAB RESCUE		$185,600.00		
In Dash Storage Bin				
(2) Cup Holders Lh And Rh Dash				
Gray/Charcoal Flat Dash				
Heater And Defroster				
Standard Hvac Ducting				
Main Hvac Controls Without Recirculation Switch				
Standard Heater Plumbing				
Standard Insulation				
Solid-State Circuit Protection And Fuses				
12V Negative Ground Electrical System				
Door Activated Dome/Red Map Lights, Forward Lh And Rh And Rear Lh, Rh And Center				
Cab Door Latches With Manual Door Locks				
Seats Inc 911 Universal Series High Back Air Suspension Driver Seat With Nfpa 1901-2009 Compliant Seat Sensor				
Seats Inc 911 Universal Series High Back Air Suspension Passenger Seat With Nfpa 1901-2009 Compliant Seat Sensor				
Seats Inc 911 Universal Scba Non Suspension Lh And Rh Rear Passenger Seats With Under Seat Storage And Nfpa 1901-2009 Compliant Seat Sensor				
Lh And Rh Integral Door Panel Armrests				
Gray Vinyl Driver Seat Cover With Gray Cordura Cloth Bolster And				
Gray Vinyl Front Passenger Seat Cover With Gray Cordura Cloth Bolster And Headrest				
Gray Vinyl Rear Passenger Seat Cover With Gray Cordura Cloth Bolster And Headrest				
3 Point High Visibility Orange Retractor Driver, Rh Front And Lh And Rh Rear Passenger Seat Belts With Nfpa 1901-2009 Compliant Sensor And Dash Harness				
Fixed Steering Column				
4-Spoke 18 Inch (450Mm) Steering Wheel				
Driver And Passenger Interior Sun Visors				
Gray Driver Instrument Panel				
Gray Center Instrument Panel				
Black Gauge Bezels				
Low Air Pressure Light And Buzzer				
2 Inch Primary And Secondary Air Pressure Gauges				
Intake Mounted Air Restriction Indicator Without Graduations				
Electronic Cruise Control With Switches In Lh Switch Panel				

Fire Apparatus and Custom Fabricators

DESCRIPTION	QTY	PRICE	STD. OPT.	INCLUDED OPT.
SUMMIT COMMERCIAL CAB RESCUE		$185,600.00		
Key Operated Ignition Switch And Integral Start Position; 4 Position Off/Run/Start/Accessory				
Odometer/Trip/Hour/Diagnostic/Voltage Display: 1X7 Character, 26 Warning Lamps, Data Linked, Icu3				
Diagnostic Interface Connector, 9 Pin, Sae J1939, Located Below Dash				
2 Inch Electric Fuel Gauge				
Programmable Rpm Control - Electronic Engine				
Electrical Engine Coolant Temperature Gauge				
2 Inch Transmission Oil Temperature Gauge				
Engine And Trip Hour Meters Integral Within Driver Display				
Customer Furnished And Installed Pto Controls				
Enhanced Stability Control				
Electric Engine Oil Pressure Gauge				
Overhead Instrument Panel				
Electronic Mph Speedometer With Secondary Kph Scale, Without Odometer				
Standard Vehicle Speed Sensor				
Electronic 3000 Rpm Tachometer				
Idle Limiter, Electronic Engine				
Digital Voltage Display Integral With Driver Display				
Single Electric Windshield Wiper Motor With Delay				
Marker Light Switch Integral With Headlight Switch				
One Valve Parking Brake System With Warning Indicator				
Self Canceling Turn Signal Switch With Dimmer, Washer/Wiper And Hazard In Handle				
Integral Electronic Turn Signal Flasher With Hazard Lamps Overriding Stop Lamps				
Cab Color A: L0214Eb Red Elite Bc				
Black, High Solids Polyurethane Chassis Paint				
Powder White (N0006Ea) Front Wheels/Rims (Pkwht21, Tkwht21, W, Tw)				
Powder White (N0006Ea) Rear Wheels/Rims (Pkwht21, Tkwht21, W, Tw)				
Bumper Paint: Fp24812 Argent Silver Dupont Flex				
U.S. Fmvss Certification				
CHASSIS MODIFICATIONS				
Rear Drop Frame Under Body and Tailboard - Steel	1		x	

11 Sperti Drive, Edgewood, KY 41017
(859)331-0360
FAX: (859)331-0399

Fire Apparatus and Custom Fabricators

DESCRIPTION	QTY	PRICE	STD. OPT.	INCLUDED OPT.
SUMMIT COMMERCIAL CAB RESCUE		$185,600.00		
Front Bumper Extenion - Delete	1		x	
Front Bumper Extension Storage - Delete	1		x	
Front Bumper Extension Gravel Shield - Aluminum Treadplate	1		x	
Tire Chains - Delete	1		x	
Rear Tow Eyes - Painted Under Rear Tailboard	2		x	
Tire Pressure Monitoring System - Valve Stem Low Pressure Indicators	1		x	
Wheels - Unfinished	1		x	
BODY - RESCUE PUMPER				
Body Construction - Combination Formed Sheet / Extruded	1		x	
Body Subframe - Aluminum Extruded	1		x	
Material - .160" and .190" 5052 Aluminum	1		x	
Body Mounting	1		x	
Polymer Isolation Strips - Chassis Frame	1		x	
Construction - All Aluminum	1		x	
Body Dimensions - 16' (195") Long, 86" High, 96" Wide	1		x	
Compartment Interiors - Unfinished Aluminum	1		x	
Compartment Floors - Raised Sweep-out Type	1		x	
Rear Tail Board - 12 inch NFPA Aluminum Treadplate	1		x	
Fenderettes - Polised Stainless Steel	2		x	
Wheel Well Liners - Full Removable Poly Liners	2		x	
Corrosion Protection Pkg - Anti Corrosion Compound and Nylon Spacers on All Fasteners	1		x	
Fuel Fill Pocket - Cast Aluminum Houseing w/ Door	1			x
Roof Top Compartments - Coffin Style Integral Formed Aluminum	1			x
Roof Top Compartments Interior False Wall To Protect Outsid Headrail	1			x
Roof Top Walkway - 30" Wide NFPA Treaplate Aluminum With 4 Floor Drains	1			x
Rood Top Landing And Step - Aluminum Treadplate / NFPA Tread Plate	1			x
COMPARTMENTAION - 8 BAY				
L1 Compartment Dimensions - 36" Wide x 72"High x 25.95 Lower Transverse Upper	1		x	
L1 Adjustable Shelf Hard ware - P100 Aluminum Unistrut	4			x

Fire Apparatus and Custom Fabricators

DESCRIPTION	QTY	PRICE	STD. OPT.	INCLUDED OPT.
SUMMIT COMMERCIAL CAB RESCUE		$185,600.00		
L2 Compartment Dimensions - 36" Wide x 72" High x 25.95" Deep Lower Transverse Upper	1		x	
L2 Adjustable Shelf Hard ware - P100 Aluminum Unistrut	4			x
L3 Compartment Dimensions - 60" Wide x 43" High x 25.95" Deep	1		x	
L3 Adjustable Shelf Hard ware - Delete	4		x	
L4 Compartment Dimensions - 48" Wide x 72" High x 25.95" Deep (Lower Rear, Transverse)	1		x	
L4 Adjustable Shelf Hard ware - P100 Aluminum Unistrut	4			x
R1 Compartment Dimensions - 36" Wide x 72"High x 25.95 Lower Transverse Upper	1		x	
R1 Adjustable Shelf Hard ware - P100 Aluminum Unistrut	4			x
R2 Compartment Dimensions - 36" Wide x 78" High x 25.95" Deep Lower Transverse Upper	1		x	
R2 Adjustable Shelf Hard ware - P100 Aluminum Unistrut	4			x
R3 Compartment Dimensions - 60" Wide x 43" High x 25.95" Deep	1		x	
R3 Adjustable Shelf Hard ware - Delete	1		x	
R4 Compartment Dimensions - 48" Wide x 78" High x 25.95" Deep (Lower Rear, Transverse)	1		x	
R4 Adjustable Shelf Hard ware - P100 Aluminum Unistrut	4			x
Rear Compartment Dimensions - 36" Wide x 72" High x 48" Deep	1			
Rear Adjustable Shelf Hard ware - P100 Aluminum Unistrut	4			
Compartment Doors - ROM Roll Up Doors	9			x
Door Finish - Anodized	1		x	
Top Seal - Drip Rail With Wiper	9		x	
Internal Drip Pans - Delete	1		x	
Door Locks - Delete	1		x	
Roof Top Compartments - Coffin Style				
RT1 Forward Transverse Compartment Dimensions - 52" Wide x 94" Long x 18" / 24" Deep x Open Storage Area	1		x	
RT2 Drivers side Compartment Dimensions - 32" Wide x 18" / 24" Deep x 157" Long	1		x	
RT3 Passenger side Compartment Dimensions - 32" Wide x 18" / 24" Deep x 169" Long	1		x	
Roof Top Compartments Access Doors - Treadplate Aluminum, Hinged Shoe Box Style (Divided Into Two Lids 78" Wide)	4		x	
Roof Top Storage - Open	1		x	

Fire Apparatus and Custom Fabricators

DESCRIPTION	QTY	PRICE	STD. OPT.	INCLUDED OPT.
SUMMIT COMMERCIAL CAB RESCUE		$185,600.00		
Latching - D-Ring Latches				
BODY UPFIT:				
Roof Access Ladder - Zico Quic-Ladder	1			x
Roof Access Ladder Deployment Warning - Activate Compartment Ajar Light When Deployed	1			x
Grab Rail - Apparatus Rear (One Each Side Of Rear Compartment)	2		x	
12 VOLT ELECTRICAL REQUIRMENTS				
12 Volt Electrical System - Multiplex System	1		x	
Wiring Requirments - NFPA 1901	1		x	
SAE Practices & FMVSS Compliant	1		x	
Wiring - GXL Stranded Copper	1		x	
12V Dc Voltage Output Testing & Documentation	1		x	
Switch Panel - Cab mounted - One Master Switch Warning System	1		x	
Reserve Capacity Test:	1		x	
Alternator Performance Test At Idle:	1		x	
Alternator Performance Test At Full Load:	1		x	
Low Voltage Alarm Test:	1		x	
Documentation - NFPA Test Results	1		x	
Battery Disconnect Switch - Supplied Chassis Manufacturer	1		x	
Battery Light - Green L.E.D. Dash Mounted	1		x	
Clearance / Marker Lights - Tecniq P2 L.E.D	24		x	
License Plate Bracket and Light - Arrow	1		x	
Brake Lights, - Whelen 600 Series Red L.E.D.	2		x	
Turn Lights - Whelen 600 Series Amber L.E.D.	2		x	
Backup Lights - Whelen 600 Series Clear L.E.D.	2		x	
Light Cluster Housing - Chrome	2		x	
Light Bar - Whelen 93" Freedom L.E.D.	1		x	
Blocking Right Away	1		x	
Lower Zone A Warning Lights - Whelen 600 Series L.E.D. Supplied Chassis Mfg	2		x	
Lower Zone B&D Intersection Lights - Whelen 600 Series L.E.D Front Bumper Tail	2		x	
Lower Zone B&D Intersection Light Chrome Flange - Whelen 6E flange	2		x	
Lower Zone B&D Midship Warning Lights - Whelen 600 Series On Cab Above Wheel Well	2		x	

Fire Apparatus and Custom Fabricators

DESCRIPTION	QTY	PRICE	STD. OPT.	INCLUDED OPT.
SUMMIT COMMERCIAL CAB RESCUE		$185,600.00		
Lower Zone B&D Midship Warning Light Chrome Flange - Whelen 6Eflange	2		x	
Lower Zone B&D Midship Warning Lights - Whelen 600 Series Rear Wheel Well	2		x	
Lower Zone B&D Midship Warning Light Chrome Flange - Whelen 6Eflange	2		x	
Upper Zone Warning Lights - Whelen 900 LED Lights	6		x	
Traffic Advisor - Delete	1		x	
Electronic Siren - Whelen WS-295	1		x	
Speaker - (1) CPI SH2015 Flush Mount	2		x	
Mechanical Siren - Delete	1		x	
Air Horns - Dual 21" Grover Stuttertone Front Bumper Mounted	2			x
Compartment Lighting - TeqNiq LED (1) Light Strip Each Door	9			x
Compartment Open Light - Red	1		x	
Ground Lighting Cab - Chassis Manufacturer Provided LED	1		x	
Ground Lighting Body - 8 TecNiq LED	8			x
Ground Lighting Front Bumper - 2 TecNiq LED	2			x
Roof Top Compartment Lighting - LED	4			x
Roof Top Walkway Lighting - (6) LED	6			x
Battery Conditioner - Kussmaul Auto-Charge Super Kit w/ Auto-Eject	1			x
Battery Charging Receptacle - Kussmaul Auto Eject	1			x
Battery Charge Indicator - Delete	1		x	
120/240 VOLT REQUIREMENTS				
120/240 Wiring Standards - NEMA & NFPA 1901	1			x
Wiring - Fine Stranded Copper Type DLOC	1			x
Conduit Type - Liquid Tight Non Metallic	1			x
Dielectric Voltage Withstand Test	1			x
Certification Test OF Power Source	1			x
Generator - 25 KW PTO Generator	1			x
PTO - Chelsea Hot Shift PTO	1			x
Generator Performance Display - Smart Power Mounted on Pump Panel	1			x
Load Center/Breaker Box - Square D 20 Space	1			x
Circuit Breakers - (16) QO series	16			x
PAINTING / STRIPING				
Undercoating	1			x

Fire Apparatus and Custom Fabricators

DESCRIPTION	QTY	PRICE	STD. OPT.	INCLUDED OPT.
SUMMIT COMMERCIAL CAB RESCUE		$185,600.00		
Wheels - Factory Aluminum Finish	1		x	
PPG Two Stage Urethane - Body Job Color	1		x	
NFPA Perimeter - 6" White Reflective Cab	1		x	
NFPA Perimeter - 6" White Reflective Body	1		x	
NFPA Chevron 6' Red/Amber Reflective - Body Only,	1		x	
MISC. EQUIPMENT				
Wheel Chocks - Zico SAC-44 w/ Mounting Brackets Installed	2			x
Wiring Schematics Supplied	1		x	
Service Manual & Parts List Supplied	1		x	
WARRANTIES				
Limited Warranty (1-Year)	1		x	
Paint Warranty (7-Year)	1		x	
Electrical Warranty (10-Year)	1		x	
Body Structural Warranty (20-Year)	1		x	
Cab Paint Warranty (10 - Year)	1		x	
Cab Structural Warranty (10 - Year/100,000 Miles)	1		x	
Engine Warranty (5 - Year/100,000 Miles)	1		x	
Transmission Warranty (5 - Year)	1		x	
RESCUE OPTIONS				
CHASSIS OPTIONS				
2 Door Cab In Lieu Of The 4 Door		-$7,800.00		
Detroit Da-F-12.0-3 12,000# Ff1 71.5 Kpi/3.74 Drop Single Front Axle		-$462.00		
Detroit Da-F-16.0-5 16,000# Fl1 71.0 Kpi/3.74 Drop Single Front Axle		$739.20		
Detroit Da-F-18.0-5 18,000# Fl1 71.0 Kpi/3.74 Drop Single Front Axle		$855.60		
Rs-23-161 24,000# R-Series Fire/Emergency Service Single Rear Axle		-$1,700.00		
Rs-30-185 31,000# U-Series Fire/Emergency Service Single Rear Axle		$1,764.00		
Dual West Coast Molded-In Color Heated Mirrors		$94.80		
Dual West Coast Bright Finish Heated Mirrors		$122.40		
Dual West Coast Bright Finish Mirrors		$98.40		
Dual West Coast Bright Finish Heated Mirrors With Lh And Rh Remote		$252.00		

Fire Apparatus and Custom Fabricators

DESCRIPTION	QTY	PRICE	STD. OPT.	INCLUDED OPT.
SUMMIT COMMERCIAL CAB RESCUE		$185,600.00		
Cum ISL 300 Hp @ 2000 Rpm, 2200 Gov Rpm, 860 Lb/Ft @ 1300 Rpm		-$985.20		
Cum ISL 350 Hp @ 2000 Rpm, 2200 Gov Rpm, 1000 Lb/Ft @ 1400 Rpm		$264.00		
Alcoa Lvl One 88367X 22.5X8.25 10-Hub Pilot 5.79 Inset Aluminum Disc Front Wheels		$260.40		
Alcoa Lvl One 88367X 22.5X8.25 10-Hub Pilot Aluminum Disc Rear Wheels		$458.40		
Polished Front And Rear Wheels; Outside Of Outer Wheels Only		$130.80		
LH And RH Electric Powered Windows		$139.20		
LH And RH Electric Door Locks		$93.60		
Hood Mounted Chromed Plastic Grille		$78.00		
Chrome Hood Mounted Air Intake Grille		$38.40		
Three-Piece 14 Inch Chromed Steel Bumper With Collapsible Ends		$182.40		
Seats Inc 911 2 Man Mid Back Non Suspension Passenger Seat With Nfpa 2009 Compliant Seat Sensors		$817.20		
Seats Inc 911 Universal Series High Back Non Suspension Passenger Seat With Underseat Storage And Nfpa 1901-2009 Compliant Seat Sensor		-$156.00		
(1) Dash Mounted Pto Switch With Indicator Lamp For Customer Installed Pto		$93.60		
Stationary Painted Full Grille For Chassis Without Integral Front Frame Extensions		$254.40		
Power And Ground Wiring Provision For Cb		$18.00		
Roof/Overhead Console Cb Radio Provision With Face Plate		$68.40		
Two On/Off Rocker Switches In The Dash With Indicator Lights And Wire Routed To Chassis At Back Of Cab, Label Opt		$62.40		
Four On/Off Rocker Switches In The Dash With Indicator Lights And Wire Routed To Chassis At Back Of Cab, Label Opt		$106.80		
Customer Furnished Din Radio Package		$91.20		
Am/Fm/Wb Radio With Front Auxiliary Input		$205.20		
Synthetic 75W-90 Front Axle Lube		$12.00		
Synthetic 75W-90 Rear Axle Lube		$58.80		
Adjustable Tilt And Telescoping Steering Column		$326.40		
Preco 1040 87 Db To 112 Db Automatic Self-Adjusting Backup Alarm		$34.80		

Fire Apparatus and Custom Fabricators

DESCRIPTION	QTY	PRICE	STD. OPT.	INCLUDED OPT.
SUMMIT COMMERCIAL CAB RESCUE		$185,600.00		
RH Down View Mirror		$24.00		
CHASSIS UPFIT OPTIONS:				
Drop Frame - Chassis Frame Dropped Behind Cab to Ahead Of Rear Wheels For Full Transverse Storage		**Contact Factory**		
Wheel Simulators - Phoenix Stainless Steel		$856.00		
Wheel Simulators - Real Wheels Stainless Steel		$876.00		
Automatic Tire Chains - On Spot		$2,595.00		
Automatic Tire Chains - Insta Chain 6 Strand		$2,760.00		
Automatic Tire Chains - Insta Chain 12 Strand		$3,004.00		
Automatic Tire Chains - Rudd 18 Stand		$3,108.00		
Map Storage - Aluminum Angle 3 Slot Between Seats		$680.00		
Center Console for radio & siren - Treadplate Aluminum (No Storage)		$895.00		
Center Consolefor radio & siren - Smooth Aluminum (No Storage)		$785.00		
Book / Binder Misc Storage for console		$400.00		
Rubberized coating for console		$260.00		
Raised or Angled switch panel on console		$115.00		
BODY UPFIT OPTIONS:				
Rear Fall Protection Barrier - Automatic Pneumatic Controlled by Roof Access Ladder		$2,810.00		
Floor Dry Hopper - Air Actuated in Roof Top Storage Area		$2,775.00		
Awning on Passenger Side Of Body		$2,115.00		
Recessed Roof Well - Light Tower		$1,200.00		
STORAGE OPTIONS:				
14 Foot, 6 Bay Body In Lieu Of 16 Foot 8 Bay Body (48" Wide L1/R2 x 60" Wide L2/R2 x 48" L3/R3)		($4,608.00)		
16 Foot, 6 Bay Body In Lieu Of 16 Foot 8 Bay Body (60" Wide L1/R2 x 60" Wide L2/R2 x 60" L3/R3)		($4,000.00)		
Increase L4 /R4 Compartment to 60" Wide		$272.00		
No Rear Compartment / Transverse L4/R4		($1,320.00)		
SCBA Spare Bottle Storage - One (1) On Each Side Fore of Rear Wheel W/Side Cast Aluminum Access Doors		$560.00		
SCBA Spare Bottle Storage - Two (2) On Each Side Fore And Aft Rear Wheel W/Side Cast Aluminum Access Doors		$977.00		
Stokes Basket / Back board Storage - Transverse Across Top Of Compartment (With TreadpLate Access Doors)		$1,033.00		

Fire Apparatus and Custom Fabricators

DESCRIPTION	QTY	PRICE	STD. OPT.	INCLUDED OPT.
SUMMIT COMMERCIAL CAB RESCUE		$185,600.00		
Collapsible Ladder Storage - Transverse Across Top Of Compartment (With TreadpLate Access Doors)		$900.00		
Full Width Storage - Transverse Across Top Of Compartment of L3/R3 Compartment (With TreadpLate Access Doors)		$1,265.00		
Rear Extension Ladder Storage		$1,452.00		
Adjustable Shelf (24" Deep)		$200.00		
Adjustable Slide Tray (24" Deep, 250lb rated)		$555.00		
Roll Out / Tilt Down Tray (24" Deep)		$725.00		
Heavy Slide Tray (600 LB Rated) - Floor Mounted		$650.00		
Heavy Slide Tray (1000 LB Rated) -Floor Mounted		$680.00		
Heavy Slide Tray For Rear Cargo Area (1000 LB Rated)		$1,580.00		
Roll Out Tool Board		$750.00		
Full Height Compartment Divider		$480.00		
Stainless Steel Wheel Steps For Over Wheel Well Access		$630.00		
Plastic Floor Tile compartment floors		$118.00		
Plastic Floor Tile Over Wheel Center Full Compartment Floor		$330.00		
Plastic Floor Tile installed on 24" shelf / Tray (each)		$75.00		
Plastic Floor Tile installed on 45" shelf / Tray (each)		$140.00		
12 VOLT ELECTRICAL OPTIONS:				
Compartment Lighting - TecNiq LED (Both Sides)		$1,512.00		
Compartment Lighting - ROM LED (One Side)		$696.00		
Compartment Lighting - ROM LED (Both Sides)		$1,620.00		
Kussmaul Pump Plus Kit In Lieu Of Kussmaul Super Kit		$765.00		
Auto Air Eject For House Air Supply		$445.00		
Additional Cast Aluminum Siren Speaker - Recessed		$558.00		
Federal Q Siren - Recessed In Bumper		$2,706.00		
Head Light Flasher		$227.00		
Back Up Camera System - Mito Color L.E.D Monitor		$1,375.00		
Back Up Camera System - Mito Color L.E.D Monitor With Side Camera		$1,860.00		
Back Up Camera System - Saftey Vision System		$2,511.00		
Back Up Camera System - Weldon (Used With VMUX Only)		$504.00		
Whelen TA870L 72" Traffic Advisor - Mounted Above Rear Compartment		$1,802.00		
Whelen TAM85 46" Traffic Advisor - Mounted Above Rear Compartment		$1,530.00		
Recess Mount For The Whelen TAM85		$200.00		
12 Volt TecNiq K90 LED Clear Scene Lights - Two (2), One on Each body Side		$840.00		

11 Sperti Drive, Edgewood, KY 41017
(859)331-0360
FAX: (859)331-0399

Fire Apparatus and Custom Fabricators

DESCRIPTION	QTY	PRICE	STD. OPT.	INCLUDED OPT.
SUMMIT COMMERCIAL CAB RESCUE		$185,600.00		
12 Volt TecNiq K90 LED Clear Scene Lights - Four (4), One on Each Body Side, Two on Rear		$1,510.00		
12 Volt TecNiq K90 LEDClear Scene Lights - Six (6), Two on Each Body Side, Two on Rear		$1,960.00		
12 Volt Whelen M9 Series LED Clear Scene Lights - Two (2), One on Each Body Side		$934.00		
12 Volt Whelen M9 Series LED Clear Scene Lights - Four (4), One on Each Body Side, Two on Rear		$1,738.00		
12 Volt Whelen M9 Series LED Clear Scene Lights - Six (6), Two on Each Body Side, Two on Rear		$2,302.00		
12 Volt Whelen 900 Series LED Clear Scene Lights - Two (2), One on Each Body Side		$870.00		
12 Volt Whelen 900 Series LED Clear Scene Lights - Four (4), One on Each Body Side, Two on Rear		$1,650.00		
12 Volt Whelen 900 Series LED Clear Scene Lights - Six (6), Two on Each Body Side, Two on Rear		$2,170.00		
12 Volt Whelen 900 Series Halogen Clear Scene Lights - Two (2), One on Each Body Side		$430.00		
12 Volt Whelen 900 Series Halogen Clear Scene Lights - Four (4), One on Each Body Side, Two on Rear		$720.00		
12 Volt Whelen 900 Series Halogen Clear Scene Lights - Six (6), Two on Each Body Side, Two on Rear		$905.00		
12 Volt Whelen Pioneer 3000 Push Up Lights - Two (2) Mounted on Body		$2,720.00		
12 Volt FRC Spectra 900 LED Clear Scene Lights - Two (2), One on Each Body Side		$1,100.00		
12 Volt FRC Spectra 900 LED Clear Scene Lights - Four (4), One on Each Body Side, Two on Rear		$2,062.00		
12 Volt FRC Spectra 900 LED Clear Scene Lights - Six (6), Two on Each Body Side, Two on Rear		$2,952.00		
Recessed Wall Light - Single Rear (Center) FRC Evolution 12000 Lumen, L.E.D, 12 Volt FCA210-V12		$1,321.00		
Recessed Wall Light - Two (2) One On Each Side (Center) FRC Evolution 12000 Lumen, L.E.D, 12 Volt FCA210-V13		$2,192.00		
Cab Brow Light - Single (Center) Over Cab - Whelen PFA2 Pioneer 7400 Lumen, L.E.D, 12 Volt		$1,680.00		
Cab Brow Light - Single (Center) Over Cab - Whelen PFP2 Pioneer 16000 Lumen, L.E.D, 12 Volt		$2,103.00		
Cab Brow Light - Single (Center) Over Cab - FRC FCA800-V08 8,000 Lumen, L.E.D, 12 Volt		$1,555.00		

Fire Apparatus and Custom Fabricators

DESCRIPTION	QTY	PRICE	STD. OPT.	INCLUDED OPT.
SUMMIT COMMERCIAL CAB RESCUE		$185,600.00		
Cab Brow Light - Single (Center) Over Cab - FRC FCA800-V15 15,000 Lumen, L.E.D, 12 Volt		$1,686.00		
Cab Brow Light - Single (Center) Over Cab - FRC SPA800-Q15 15,000 Lumen, L.E.D, 12 Volt		$1,899.00		
Cab Brow Light - Single (Center) Over Cab - FRC SPA800-Q20 20,000 Lumen, L.E.D, 12 Volt		$2,093.00		
120/240 VOLT ELECTRICAL OPTIONS				
20KW Hydraulic Generator In Lieu Of 25KW PTO Generator		$7,826.00		
30KW Hydraulic Generator In Lieu Of 25KW PTO Generator		$17,564.00		
Remote Generator Activation - Front Bumper		$250.00		
Exterior Receptacles - Covered Duplex 5-20		$285.00		
Interior 120 Volt Receptacles - Cab, Duplex 5-15		$320.00		
Interior 120 Volt Receptacles - Body Compartrment, Duplex 5-15		$250.00		
220 Volt Receptacle - Body Compartment		$295.00		
Electric Cord Reel - 200' 10/3 Black Cable		$2,180.00		
Electric Cord - 200' 10/3 Yellow Cord In Lieu Of The Black		$180.00		
Electric Cord Ball Stop		$25.00		
Electric Junction Box - Akron With 4 L5-20 Receptacles		$425.00		
Electric Junction Box - Circle D With 4 L5-20 Receptacles		$545.00		
Fair Lead, Cord Reel - Hannay 4 Way		$180.00		
Junction Box Mounting Bracket - Aluminum		$150.00		
Rear Mount Tri-Pod Lights - Akron ELNB-750-Pod 120Volt, 750 WattTripods (Per Pair) * Requires Exterior Receptacle		$1,665.00		
Rear Mount Tri-Pod Lights - FRC FCA600-S75 120 Volt 750 Watt Tripods (Per Pair) * Requires Exterior Receptacle		$1,815.00		
Rear Mount Tri-Pod Lights - FRC FCA600-M10 1000 Watt Tripods (Per Pair) * Requires Exterior Receptacle		$1,932.00		
Rear Mount Tri-Pod Lights - FRC FCA600-M12 240 Volt, 1000 Watt Tripods (Per Pair) * Requires 240 Volt Exterior Receptacle		$1,932.00		
Rear Mount Tri-Pod Lights - FRC OPA600-S75 120 Volt 750 Watt Tripods (Per Pair) * Requires Exterior Receptacle		$1,834.00		
Rear Mount Tri-Pod Lights - FRC OPA600-M10 1000 Watt Tripods (Per Pair) * Requires Exterior Receptacle		$1,997.00		
Rear Mount Tri-Pod Lights - FRC OPA600-M12 240 Volt, 1000 Watt Tripods (Per Pair) * Requires Exterior 240 Volt Receptacle		$1,997.00		

Fire Apparatus and Custom Fabricators

DESCRIPTION	QTY	PRICE	STD. OPT.	INCLUDED OPT.
SUMMIT COMMERCIAL CAB RESCUE		$185,600.00		
Recessed Wall Light - Single Rear (Center) FRC 500 Watt,120 Volt FCA210-S50		$645.00		
Recessed Wall Light - Single Rear (Center) FRC 750 Watt,120 Volt FCA210-S75		$698.00		
Recessed Wall Light - Single Rear (Center) FRC 1000 Watt, 120 Volt FCA210-M10		$869.00		
Recessed Wall Light - Single Rear (Center) FRC 1000 Watt, 240 Volt FCA210-M12		$894.00		
Recessed Wall Light - Two (2) One On Each Side (Center) FRC 500 Watt,120 Volt FCA210-S50		$1,320.00		
Recessed Wall Light - Two (2) One On Each Side (Center) FRC 750 Watt,120 Volt FCA210-S75		$1,408.00		
Recessed Wall Light - Two (2) One On Each Side(Center) FRC 1000 Watt, 120 Volt FCA210-M10		$1,408.00		
Recessed Wall Light - Two (2) One On Each Side(Center) FRC 1000 Watt, 240 Volt FCA210-M12				
Recessed Wall Light - Two (2) One On Each Side (Center) FRC 12000 Lumen, L.E.D, 12 Volt FCA210-V12		$2,418.00		
Light Tower - Wil-Burt NS4.5-4000 Mounted In RT1 Body Compartment		$18,406.00		
Light Tower - Wil-Burt NS4.5-6000 Mounted In RT1 Body Compartment		$18,780.00		
Light Tower - Wil-Burt NS4.5-9000 Mounted In RT1 Body Compartment		$19,757.00		
Dual Tilt Feature		$359.00		
Light Tower Fairing - Aluminum, Body Roof Mounted, Painted to Match		$1,600.00		
Light Tower Fairing - Treadplate Aluminum, Body Roof Mount		$1,120.00		
PAINT:				
Two Tone Chassis - Custom Cab MFD		$3,550.00		
Two Tone Chassis - Custom Cab LFD		$3,620.00		
Painting Jambs in addition to paint (4 Door)		$1,200.00		
Two Tone Body		$2,550.00		
Body Undercoating		$415.00		
Painted Steel Wheels to Job Color		$460.00		

11 Sperti Drive, Edgewood, KY 41017
(859)331-0360
FAX: (859)331-0399

CUSTOM DESIGN IS OUR SPECIALTY, QUALITY IS OUR COMMITMENT!

11 Sperti Drive Edgewood, KY 41017 (859) 331-0360 www.SummitFireApparatus.com

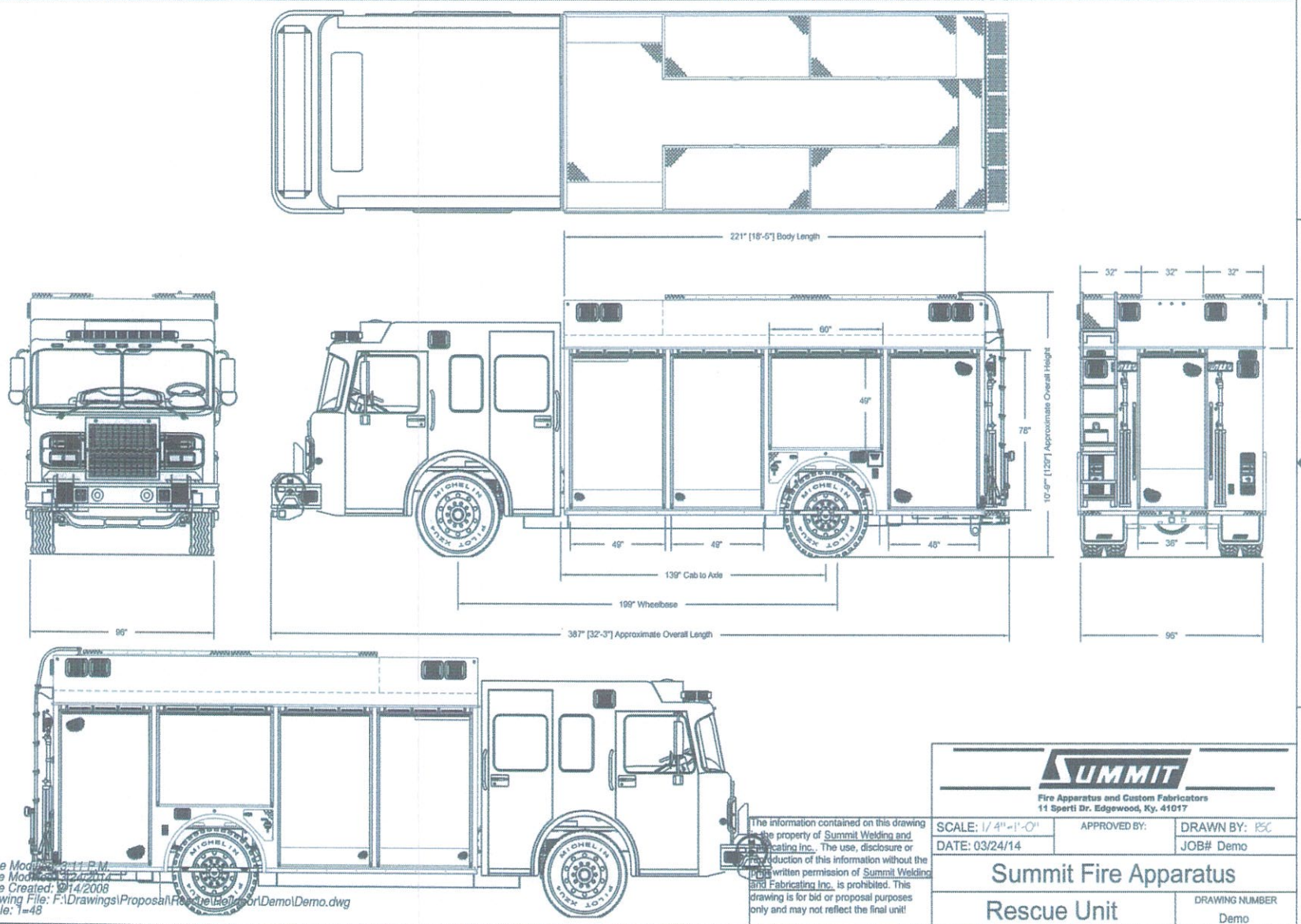

Time Modified: 3:11 P.M.
Date Modified: 03/24/2014
Date Created: 9/14/2008
Drawing File: F:\Drawings\Proposal\Rescue\Demo\Demo.dwg
Scale: 1=48

The information contained on this drawing is the property of Summit Welding and Fabricating Inc.. The use, disclosure or reproduction of this information without the written permission of Summit Welding and Fabricating Inc. is prohibited. This drawing is for bid or proposal purposes only and may not reflect the final unit!

SUMMIT

Fire Apparatus and Custom Fabricators
11 Sperti Dr. Edgewood, Ky. 41017

SCALE: 1/4"=1'-0"	APPROVED BY:	DRAWN BY: RSC
DATE: 03/24/14		JOB# Demo

Summit Fire Apparatus

Rescue Unit

DRAWING NUMBER
Demo

Fire Apparatus and Custom Fabricators

DESCRIPTION	QTY	PRICE	STD. OPT.	INCLUDED OPT.
SUMMIT CUSTOM CAB HEAVY RESCUE		$294,400.00		
CHASSIS				
Spartan - Metro Star	1			
Summit Fire (SUM1001)				
Model Year - 2015				
Country of Service United States Of America				
Apparatus Type - Rescue				
Vehicle Type Straight Truck				
Axle Configuration 4x2 (Rear Axle Drive Only)				
GAWR Front 18000#				
GAWR Rear 24000#				
Cab Style MFD 10" Raised Roof				
Occupant Protection Advanced Protection System				
Cab Frt Fascia Classic				
Cab Frt Grille Hinged Classic Styled				
Cab Undercoat				
Cab Side Drip Rail				
Cab Paint Exterior Single Color				
Cab Paint Manufacturer PPG				
Cab Paint Primary/Lower Color No Selection/TBD				
Cab Paint Warranty 2015 (10) Year/100,000 Miles				
Cab Paint Int Zolatone Silver Gray				
Cab Entry Doors (4)				
Cab Entry Door Type Full Length				
Cab Insulation				
Cab Structural Warranty 2015 (10) Year/100,000 Miles				
Cab Test Information Crash Test ECE-R29/SAE J2420/SAE J2422				
Elec System 12V DC				
Data Recording Sys Vehicle Data Weldon w/Remote USB Data Link				
Accessory Pwr & Gnd Stud 40A Batt Dir & 15A Ign Sw				
Aux Acc Pwr & Gnd Stud Bhd Sw Pnl 40A Mstr Sw				
Addl Acc Pwr 10 Fuse Pnl Bhd Off Seat w/40A Fuse Batt Dir				
Exterior Electrical Terminal Coating Spray On Plasti Dip				
Engine Diesel 330HP Cummins ISL9 - EPA 2013				
Cab Engine Tunnel Small/Medium				
DPF Ctrl Regeneration Sw & Inhibit Sw				
Engine Programming High Idle Speed 1250 RPM				
Engine High Idle Ctrl Manual				
Engine Programming Road Speed Governor Enabled				
Aux Engine Brake Compression Brake w/VG Turbo				
Aux Engine Brake Ctrl On/Off & Low/Med/High Sw Pnl				

Fire Apparatus and Custom Fabricators

DESCRIPTION	QTY	PRICE	STD. OPT.	INCLUDED OPT.
SUMMIT CUSTOM CAB HEAVY RESCUE		$294,400.00		
Elec Engine Oil Level Indicator				
Fluid Fills Fwd For Med Displacement Cap				
Engine Drain Plug				
Engine Warranty Cummins (5) Year/100,000 Miles				
Engine Program Rmt Throttle Off				
Engine Programming Idle Speed 700 RPM				
Engine Fan Drive Direct				
Engine Cooling Sys Serial Flow Medium				
Engine Cooling System Protection Light Duty Skid Plate				
Engine Coolant Extended Life				
Elec Low Coolant Level Indicator				
Coolant Hoses Silicone Heater & Radiator w/Cab Int Rubber Hoses				
Engine Air Intake Filtration and Restriction w/Replaceable Element				
Air Intake Protection Light Duty Skid Plate				
Eng Exhaust Sys Under Frm RH Inboard w/DPF/SCR Inline				
Diesel Exhaust Fluid Tank LH 6 Gal Fill Thru Rr Step				
Engine Exh Acc Exh Temp Mitigation				
Engine Exhaust Wrap				
Transmission Allison 3000 EVS				
Transmission Mode Programming 5th Startup/6th Mode				
Transmission Feature Programming Allison Gen V-E I/O Package 227/Rescue				
Transmission GEN V-E Shift Sel Key Pad/Push Button				
Elec Transmission Oil Level Indicator				
2nd Gear Pre-Select				
Transmission Cooling System				
Transmission Drain Plug				
Transmission Warranty Allison (5) Year				
PTO Location 8:00/4:00				
Driveline Spicer 1710 HD				
Fuel Filter/Wtr Separator Fleetguard FS1003 w/Lt & Alarm				
Fuel Lines Nylon				
Electric Fuel Primer Engine Sply Electric Lift Pump				
Fuel Tank 50 Gallon				
Fuel Tank Fill Port LH Rwd/RH Mid				
Frt Axle Meritor MFS 18000# Beam				
Front Axle Warranty Meritor 2015				
Frt Wheel Bearing Lube Oil				
Frt Shock Absorbers Bilstein				
Frt Suspension 4 Leaf 13220-18000#				
Steering Column/Wheel Tilt/Telescopic 18" 4 Spoke				

Fire Apparatus and Custom Fabricators

DESCRIPTION	QTY	PRICE	STD. OPT.	INCLUDED OPT.
SUMMIT CUSTOM CAB HEAVY RESCUE		$294,400.00		
Elec Power Steering Fluid Level Indicator				
Power Steering Pump TRW				
Front Axle Cramp Angle 50 Degrees				
Power Steering Gear TRW TAS 85				
Chassis Alignment				
Rear Axle 24000# Meritor RS-24-160				
Rear Axle Warranty Meritor 2015				
Rear Axle Differential Lubrication Oil				
Rear Wheel Bearing Lubrication Oil				
Vehicle Top Speed 65 MPH				
Rear Susp Reyco 79KB Spring 21000-31500# Conventional				
Frt Tire 315/80R 22.5 Goodyear G291				
Rear Tire 11R 22.5 Goodyear G661 HSA				
Rear Axle Ratio 6.14				
Tire Pressure Ind Frt Dial & Rr Pop Up Voucher				
Frt Wheel Accuride 22.5 x 9.00 Steel				
Rr Whl Accuride 22.5 x 8.25 Steel				
Wheel Paint Primary/Lower Cab Color				
Brake System ABS/ATC/ESC Sgl Axle				
Frt Brakes S-Cam Drum 16.5" x 6"				
Rr Brakes S-Cam Drum 16.5" x 7"				
Prk Brake Rr Wheels Only				
Prk Brake Ctrl Ctr Tunnel Mnt				
Frt Brake Slack Adjusters Meritor				
Rr Brake Slack Adjusters Meritor				
Air Dryer Wabco System Saver 1200 Bhd LH Batt Box				
Frt Brake Chambers MGM Type 30				
Rr Brake Chambers TSE 30/30				
Air Compressor Wabco SS318 18.7 CFM				
Air Governor Mnt on Air Dryer Bracket				
Moisture Ejectors Manual/Auto Wet Tank				
Air Sply Lines Nylon				
Rear Air Tank Mnt Any Bhd Rear Axle Perpendicular w/Frame				
Wheelbase 200.0"				
Rear Overhang 47.0"				
Frame Double Channel 35.00" Width				
Frame Warranty Lifetime 2015				
Frame Paint Powder Coat Black				
Frt Bumper Stainless Steel Flat				
Frt Bumper Extension Length 24"				
Frt Bumper Extension Frame Width 48.25"				

Fire Apparatus and Custom Fabricators

DESCRIPTION	QTY	PRICE	STD. OPT.	INCLUDED OPT.
SUMMIT CUSTOM CAB HEAVY RESCUE		$294,400.00		
Air Horn 21" - Grover Provided Loose				
Air Horn Location Frt Bmpr Face LH IB				
Air Horn Reservoir (1) 1200 Cu In				
Frt Bumper Tow Hooks Painted Side Rwd				
Cab Tilt System				
Cab Tilt Ctrl Receptacle Temp				
Cab Windshield				
Glass Frt Dr Roll Down/XDuty Regulator				
Glass Tint Frt Dr Automotive Green				
Glass Rr Dr RH Roll Down/XDuty Regulator				
Glass Tint Rr Door RH Automotive Green				
Glass Rr Dr LH Roll Down/XDuty Regulator				
Glass Tint Rr Door LH Automotive Green				
Glass Side Mid RH Fxd 16"W x 26"H				
Glass Tint Side Mid RH Automotive Green				
Glass Side Mid LH Fxd 16"W x 26"H				
Glass Tint Side Mid LH Automotive Green				
Glass Upper Side Frt (2) R/L Fxd 12.5"W x 11"H				
Glass Tint Upper Side Frt Automotive Green				
Glass Upper Side Mid (2) R/L Fxd 16"W x 14"H				
Glass Tint Upper Side Mid Automotive Green				
Glass Upper Side Rr Door (2) R/L Fxd 27"W x 14"H				
Glass Tint Upper Side Rr Door Automotive Green				
Climate Ctrl Htr Defroster Frt Ovrhd/Htr A/C Tunnel Mnt				
Climate Control Drain Gravity				
Climate Ctrl Actv Device Mnt Ovrhd/Device Mnt Tunnel				
A/C Condenser Location Roof Mnt Fwd Ctr				
A/C Compressor Large Capacity				
Under Cab Insulation Engine Tunnel				
Interior Trim Floor				
Interior Trim Vinyl				
Rear Wall Interior Trim Vinyl				
Header Trim ABS				
Trim Center Dash ABS				
Trim LH Dash ABS				
Trim RH Dash ABS Glove Cmpt/MDT Prov				
Eng Tnl Trim Flr Mat				
Step Trim Grip Strut Lwr Flex-Tred Mid				
Under Cab Access Door Rear Step LH Painted				
Interior Door Trim Painted				
Door Trim Customer Nameplate				

Fire Apparatus and Custom Fabricators

DESCRIPTION	QTY	PRICE	STD. OPT.	INCLUDED OPT.
SUMMIT CUSTOM CAB HEAVY RESCUE		$294,400.00		
Cab Dr Trim Reflective Vert Stripe/6" Chevron w/Logo				
Interior Grab Handle 'A' Pillar 11" Molded				
Interior Grab Handle Frt Door Horiz 9"				
Int Grab Handle Rr Dr Alum Window Span 30" Black Powder Coat				
Interior Trim Vinyl Color Gray				
Interior Trim Sunvisor Vinyl				
Interior ABS Trim Color Gray				
Interior Floor Mat Color Gray				
Cab Paint Int Dr Trim Zolatone Silver Gray				
Dash Pnl Group 3-Pnl				
Switches Ctr Pnl 12 (6+6) LH				
Switches Left Pnl 8 Upper w/Headlight/Dimmer/Wiper				
Switches Right Pnl 0				
Seat Belt Warn Indv Seat Loc & LED Display w/VDR Weldon				
Seat Material Ballistic				
Seat Color Gray/Red Seat Belts				
Seat Back Logo Spartan Chassis				
Seat Driver Bostrom Firefighter 4-Way Air Non-ABTS				
Seat Back Driver Non-SCBA Non-ABTS				
Seat Mounting Driver				
Occupant Protection Driver Advanced Protection System				
Seat Officer Bostrom Firefighter 2-Way Manual ABTS				
Seat Back Officer Non-SCBA ABTS				
Seat Mounting Officer				
Occupant Protection Officer Advanced Protection System				
Seat Belt Orientation Crew Outboard Shoulder To Inboard Hip				
Seat RFO Location (2) R/L				
Seat Crew RFO Bostrom Firefighter Fixed				
Seat Back RFO SCBA Bostrom SecureAll w/Quick-Adjust				
Seat Mounting Rear Facing Outer				
Occupant Protection RFO Advanced Protection System				
Seat FFC Location (2) Ctr				
Seat Crew FFC Bostrom Firefighter Flip-Up				
Seat Back FFC SCBA Bostrom SecureAll w/Quick-Adjust				
Occupant Protection FFC Advanced Protection System				
Seat Frm Fwd Fcg Dual				
Seat Frm Fwd Fcg Strg Acc Dr (2) R/L Sd				
Seat Mounting Forward Facing Center				
Cab Frt Undrst Strg Acc Dr				
Seat Compartment Door Finish Zolatone Silver Gray				
Windshield Wiper System Single Motor				

Fire Apparatus and Custom Fabricators

DESCRIPTION	QTY	PRICE	STD. OPT.	INCLUDED OPT.
SUMMIT CUSTOM CAB HEAVY RESCUE		$294,400.00		
Electronic Windshield Fluid Level Indicator				
Cab Door Hardware Black				
Door Locks Manual				
Grab Handles SS 18"				
Mirror Aerodynamic Retrac 613265 Rmt				
Cab Fender Alum				
Cab Ext Frt & Side Emblems w/Side Emblem Integrated Model Nameplate				
Cab Exterior Model Nameplate Metro Star Advanced Protection System w/Emblem				
Ign Mstr Sw w/Keyless Start				
Batt (6) Group 31 Harris				
Batt Tray (2) R/L Steel				
Batt Box Cover (2) Steel w/Black Handles				
Batt Cables				
Batt Jumper Stud Frt LH Lwr Step				
Alternator Leece-Neville 270A				
Headlights 4 Headlamps Halogen				
Frt Turn Signals Whelen 600 Series Halogen				
Headlights Below Frt Warn Lts				
Side Turn/Marker Lts LED				
Marker & ICC Lts Face Mnt LED				
Hdlt & Mrkr Lt Actv Rkr Sw/DRL				
Ground Lts Resp Dr & Rkr Sw				
Step Lts LED				
Engine Cmpt Work Lt (1)				
Interior Overhead Lts Weldon w/Front Map Lts				
Do Not Move App Lt Flashing Red w/Alarm				
Mstr Warn Sw Pnl				
Inboard Frt Warn Lts Whelen 600 Super LED Chrm Bezel				
Inboard Frt Warn Lts Color Red				
Frt Warn Sw Pnl				
Horn Btn Sel Sw Elec Horn/Air Horn				
Air Horn Actv Strg Whl/RH Ft Sw				
Back-Up Alarm Ecco 575				
Instrumentation Standard				
Backlighting Color Red				
Panel Layout				
Cab Exterior Protection Front				
Fire Extinguisher Ship Loose				
Door Keys for Manual Locks (4)				

Fire Apparatus and Custom Fabricators

DESCRIPTION	QTY	PRICE	STD. OPT.	INCLUDED OPT.
SUMMIT CUSTOM CAB HEAVY RESCUE		$294,400.00		
Diagnostic Software Occupant Protection Advanced Protection System				
Warranty Cab and Chassis 2015 (2) Year				
Cab and Chassis Labeling Language English				
Chassis Operation Manual Digital Copy (2)				
Eng & Trans Operation Man Eng Hard Copy/Trans Digital/Eng Owner Digital				
Cab/Chassis As Built Wiring Diagrams Digital Copy (2)				
Sales Terms				
End of Frame Cross Member				
CHASSIS MODIFICATIONS				
Rear Drop Frame Under Body and Tailboard - Steel	1		x	
Front Bumper Bumperettes - Rubber, Extended to Protect Q Siren	2			x
Front Bumper Extenion - 24"	1			x
Front Bumper Extension Storage - Aluminum (2 x Hyd Reels, One On Each Side)	1			x
Front Bumper Extension Gravel Shield - Aluminum Treadplate	1			x
Hydraulic Reels Front Bumper Mount - Hannay EF Series Electric Reels	2			x
Hydraulic Hoses - Delete	1			x
Hydraulic Reel Fairleads - 4 Way	2			x
Hydraulic Reels Rewind Switch - Momentary Adjacent to Each Reel	2			x
Rescue Tool Mounting- Front Bumper (2 Tools In Center)	2			x
Side Winch / Rope Anchor Points - 2" Receiver Left and Right In Forward Portion of Rear Wheel Well	2			x
Side Winch / Rope Anchor Point Storage - Delete	1		x	
Side Winch / Rope Anchor Point Storage Lighting - Delete	1		x	
Side Winch / Rope Anchor Points Access Doors - Delete	2			x
Tire Chains - Delete	1		x	
Rear Tow Eyes - Painted Under Rear Tailboard	2		x	
Tire Pressure Monitoring System - Valve Stem Low Pressure Indicators	1		x	
Wheels - Unfinished	1		x	
BODY - HEAVY RESCUE				
Body Construction - Combination Formed Sheet / Extruded	1		x	
Body Subframe - Aluminum Extruded	1		x	
Material - .160" and .190" 5052 Aluminum	1		x	
Body Mounting	1		x	
Polymer Isolation Strips - Chassis Frame	1		x	

Fire Apparatus and Custom Fabricators

DESCRIPTION	QTY	PRICE	STD. OPT.	INCLUDED OPT.
SUMMIT CUSTOM CAB HEAVY RESCUE		$294,400.00		
Construction - All Aluminum	1		x	
Body Dimensions - 18' (220") Long, 104" High, 96" Wide	1		x	
Compartment Interiors - Unfinished Aluminum	1		x	
Compartment Floors - Raised Sweep-out Type	1		x	
Rear Tail Board - 12 inch NFPA Aluminum Treadplate	1		x	
Fenderettes - Polised Stainless Steel	2		x	
Wheel Well Liners - Full Removable Poly Liners	2		x	
Corrosion Protection Pkg - Anti Corrosion Compound and Nylon Spacers on All Fasteners	1		x	
Fuel Fill Pocket - Cast Aluminum Houseing w/ Door	1			x
Roof Top Compartments - Coffin Style Integral Formed Aluminum	1			x
Roof Top Compartments Interior False Wall To Protect Outsid Headrail	1			x
Roof Top Walkway - 32" Wide NFPA Treaplate Aluminum With 4 Floor Drains	1			x
Rood Top Landing And Step - Aluminum Treadplate / NFPA Tread Plate	1			x
COMPARTMENTAION - 8 BAY				
L1 Compartment Dimensions - 48" Wide x 78"High x 25.95 Lower Transverse Upper	1		x	
L1 Adjustable Shelf Hard ware - P100 Aluminum Unistrut	4			x
L2 Compartment Dimensions - 48" Wide x 78" High x 25.95" Deep Lower Transverse Upper	1		x	
L2 Adjustable Shelf Hard ware - P100 Aluminum Unistrut	4			x
L3 Compartment Dimensions - 60" Wide x 49" High x 25.95" Deep	1		x	
L3 Adjustable Shelf Hard ware - Delete	4		x	
L4 Compartment Dimensions - 48" Wide x 78" High x 25.95" Deep	1		x	
L4 Adjustable Shelf Hard ware - P100 Aluminum Unistrut	4			x
R1 Compartment Dimensions - 48" Wide x 72"High x 25.95 Lower Transverse Upper	1		x	
R1 Adjustable Shelf Hard ware - P100 Aluminum Unistrut	4			x
R2 Compartment Dimensions - 48" Wide x 78" High x 25.95" Deep Lower Transverse Upper	1		x	
R2 Adjustable Shelf Hard ware - P100 Aluminum Unistrut	4			x
R3 Compartment Dimensions - 60" Wide x 49" High x 25.95" Deep	1		x	
R3 Adjustable Shelf Hard ware - Delete	1		x	
R4 Compartment Dimensions - 48" Wide x 78" High x 25.95" Deep	1		x	
R4 Adjustable Shelf Hard ware - P100 Aluminum Unistrut	4			x
Rear Compartment Dimensions - 36" Wide x 78" High x 48" Deep	1			
Rear Adjustable Shelf Hard ware - P100 Aluminum Unistrut	4			

11 Sperti Drive, Edgewood, KY 41017
(859)331-0360
FAX: (859)331-0399

Fire Apparatus and Custom Fabricators

DESCRIPTION	QTY	PRICE	STD. OPT.	INCLUDED OPT.
SUMMIT CUSTOM CAB HEAVY RESCUE		$294,400.00		
Compartment Doors - ROM Roll Up Doors	9			x
Door Finish - Anodized	1		x	
Top Seal - Drip Rail With Wiper	9		x	
Internal Drip Pans - Delete	1		x	
Door Locks - Delete	1		x	
Roof Top Compartments - Coffin Style				
RT1 Forward Transverse Compartment Dimensions - 52" Wide x 94" Long x 18" / 24" Deep x Open Storage Area	1		x	
RT2 Drivers side Compartment Dimensions - 32" Wide x 18" / 24" Deep x 157" Long	1		x	
RT3 Passenger side Compartment Dimensions - 32" Wide x 18" / 24" Deep x 169" Long	1		x	
Roof Top Compartments Access Doors - Treadplate Aluminum, Hinged Shoe Box Style (Divided Into Two Lids 78" Wide)	4		x	
Roof Top Storage - Open	1		x	
Latching - D-Ring Latches				
BODY UPFIT:				
Roof Access Ladder - Zico Quic-Ladder	1			x
Roof Access Ladder Deployment Warning - Activate Compartment Ajar Light When Deployed	1			x
Grab Rail - Apparatus Rear (One Each Side Of Rear Compartment)	2		x	
12 VOLT ELECTRICAL REQUIRMENTS				
12 Volt Elctrical System - Multiplex System	1		x	
Wiring Requirments - NFPA 1901	1		x	
SAE Practices & FMVSS Compliant	1		x	
Wiring - GXL Stranded Copper	1		x	
12V Dc Voltage Output Testing & Documentation	1		x	
Switch Panel - Cab mounted - One Master Switch Warning System	1		x	
Reserve Capacity Test:	1		x	
Alternator Performance Test At Idle:	1		x	
Alternator Performance Test At Full Load:	1		x	
Low Voltage Alarm Test:	1		x	
Documentation - NFPA Test Results	1		x	
Battery Disconnect Switch - Supplied Chassis Manufacturer	1		x	
Battery Light - Green L.E.D. Dash Mounted	1		x	
Clearance / Marker Lights - Tecniq P2 L.E.D	24		x	
License Plate Bracket and Light - Arrow	1		x	
Brake Lights, - Whelen 600 Series Red L.E.D.	2		x	
Turn Lights - Whelen 600 Series Amber L.E.D.	2		x	

Fire Apparatus and Custom Fabricators

DESCRIPTION	QTY	PRICE	STD. OPT.	INCLUDED OPT.
SUMMIT CUSTOM CAB HEAVY RESCUE		$294,400.00		
Backup Lights - Whelen 600 Series Clear L.E.D.	2		x	
Light Cluster Housing - Chrome	2		x	
Light Bar - Whelen 93" Freedom L.E.D.	1		x	
Blocking Right Away	1		x	
Lower Zone A Warning Lights - Whelen 600 Series L.E.D. Supplied Chassis Mfg	2		x	
Lower Zone B&D Intersection Lights - Whelen 600 Series L.E.D Front Bumper Tail	2		x	
Lower Zone B&D Intersection Light Chrome Flange - Whelen 6E flange	2		x	
Lower Zone B&D Midship Warning Lights - Whelen 600 Series On Cab Above Wheel Well	2		x	
Lower Zone B&D Midship Warning Light Chrome Flange - Whelen 6Eflange	2		x	
Lower Zone B&D Midship Warning Lights - Whelen 600 Series Rear Wheel Well	2		x	
Lower Zone B&D Midship Warning Light Chrome Flange - Whelen 6Eflange	2		x	
Upper Zone Warning Lights - Whelen 900 LED Lights	6		x	
Traffic Advisor - Delete	1		x	
Electronic Siren - Whelen WS-295	1		x	
Speaker - (1) CPI SH2015 Flush Mount	2		x	
Mechanical Siren - Delete	1		x	
Air Horns - Dual 21" Grover Stuttertone Front Bumper Mounted	2			x
Compartment Lighting - TeqNiq LED (1) Light Strip Each Door	9			x
Compartment Open Light - Red	1		x	
Ground Lighting Cab - Chassis Manufacturer Provided LED	1		x	
Ground Lighting Body - 8 TecNiq LED	8			x
Ground Lighting Front Bumper - 2 TecNiq LED	2			x
Roof Top Compartment Lighting - LED	4			x
Roof Top Walkway Lighting - (6) LED	6			x
Battery Conditioner - Kussmaul Auto-Charge Super Kit w/ Auto-Eject	1			x
Battery Charging Receptacle - Kussmaul Auto Eject	1			x
Battery Charge Indicator - Delete	1		x	
SCENE LIGHTING - 12 VOLT				
Scene Lights - (6) Whelen LED 900 Scene Lights	6			x
Brow Light - (1) FRC FCA850-S50	1			x
120/240 VOLT REQUIREMENTS				

Fire Apparatus and Custom Fabricators

DESCRIPTION	QTY	PRICE	STD. OPT.	INCLUDED OPT.
SUMMIT CUSTOM CAB HEAVY RESCUE		$294,400.00		
120/240 Wiring Standards - NEMA & NFPA 1901	1			x
Wiring - Fine Stranded Copper Type DLOC	1			x
Conduit Type - Liquid Tight Non Metallic	1			x
Dielectric Voltage Withstand Test	1			x
Certification Test OF Power Source	1			x
Generator - 25 KW PTO Generator	1			x
PTO - Chelsea Hot Shift PTO	1			x
Generator Performance Display - Smart Power Mounted on Pump Panel	1			x
Load Center/Breaker Box - Square D 20 Space	1			x
Circuit Breakers - (16) QO series	16			x
PAINTING / STRIPING				
Undercoating	1			x
Wheels - Factory Aluminum Finish	1		x	
PPG Two Stage Urethane - Body Job Color	1		x	
NFPA Perimeter - 6" White Reflective Cab	1		x	
NFPA Perimeter - 6" White Reflective Body	1		x	
NFPA Chevron 6' Red/Amber Reflective - Body, Rear Door, Hose Bed Door	1			x
MISC. EQUIPMENT				
Wheel Chocks - Zico SAC-44 w/ Mounting Brackets Installed	2			x
Wiring Schematics Supplied	1		x	
Service Manual & Parts List Supplied	1		x	
WARRANTIES				
Limited Warranty (1-Year)	1		x	
Paint Warranty (7-Year)	1		x	
Electrical Warranty (10-Year)	1		x	
Body Structural Warranty (20-Year)	1		x	
Cab Paint Warranty (10 - Year)	1		x	
Cab Structural Warranty (10 - Year/100,000 Miles)	1		x	
Engine Warranty (5 - Year/100,000 Miles)	1		x	
Transmission Warranty (5 - Year)	1		x	

11 Sperti Drive, Edgewood, KY 41017
(859)331-0360
FAX: (859)331-0399

Fire Apparatus and Custom Fabricators

DESCRIPTION	QTY	PRICE	STD. OPT.	INCLUDED OPT.
SUMMIT CUSTOM CAB HEAVY RESCUE		$294,400.00		
HEAVY RESCUE OPTIONS				
SPARTAN METRO CHASSIS OPTIONS				
20" MFD Cab In Lieu Of 10" Raised Roof MFD Cab		$1,752.00		
20" Raised Roof LFD Cab In Lieu Of 10" Raised Roof MFD Cab		$4,924.00		
10" Raised Roof LFD Cab In Lieu Of 10" Raised Roof MFD Cab		$3,204.00		
350 Hp Cummins ISL In Lieu Of The 330 Hp Cummins ISL		$297.00		
380 Hp Cummins ISL In Lieu Of The 330 Hp Cummins ISL		$745.00		
400 Hp Cummins ISL In Lieu Of The 330 Hp Cummins ISL		$8,426.00		
450 Hp Cummins ISL In Lieu Of The 330 Hp Cummins ISL		$9,148.00		
68 Galon Fuel Tank in Lieu Of the 50 Gallon		$166.00		
Weldon Multiplex V-Mux Chassis With Vista Display (Drivers Side)		$4,992.00		
Officer Side V-Mux Vista Display		$1,838.00		
Rear Air Suspension		$1,428.00		
Front Wheel 17" Disc Brakes		$409.00		
Michelin Rear M&S Grip Tires In Lieu Of Highway Read		$250.00		
Auto Tank Drains in Lieu Of Manual Drains		$121.00		
Heated Wet Tank Auto Ejector		$123.00		
Chrome Door Handles And Scuff Plates		$776.00		
Electric Door Locks In Lieu of Manual		$1,102.00		
Power Windows In Lieu Of Manual Roll Up		$2,017.00		
Xtreme Duty Interior In Lieu OF ABS Plastic		$3,800.00		
Stainless Steel Door Panels In Lieu Of Painted Aluminum		$950.00		
Heated Mirrors		$56.00		
Ramco CRM 1750 3HR Bus Style Mirrors		$477.00		
Ramco CRM 310 1350 CHCHR Bus Style Mirrors		$93.00		
Over Head Air Conditioner Unit In Lieu Of the Engine Tunnel Mount		$2,735.00		
CHASSIS UPFIT OPTIONS:				
Drop Frame - Chassis Frame Dropped Behind Cab to Ahead Of Rear Wheels For Full Transverse Storage		**Contact Factory**		
Wheel Simulators - Phoenix Stainless Steel		$856.00		
Wheel Simulators - Real Wheels Stainless Steel		$876.00		
Automatic Tire Chains - On Spot		$2,595.00		
Automatic Tire Chains - Insta Chain 6 Strand		$2,760.00		
Automatic Tire Chains - Insta Chain 12 Strand		$3,004.00		
Automatic Tire Chains - Rudd 18 Stand		$3,108.00		
EMS Storage Compartment W/ Cargo Net - Rear Facing against Engine Tunnel		$1,332.00		

Fire Apparatus and Custom Fabricators

DESCRIPTION	QTY	PRICE	STD. OPT.	INCLUDED OPT.
SUMMIT CUSTOM CAB HEAVY RESCUE		$294,400.00		
EMS Storage Compartment W/ Roll Up Access Door - Rear Facing against Engine Tunnel		$2,570.00		
Engine Tunnel Mounting Tray - Bare Aluminum		$675.00		
Engine Tunnel Mounting Tray - Rubberized Aluminum		$875.00		
Map Storage - Aluminum Angle 3 Slot Engine Tunnel Mount		$680.00		
Command Desk - Pedastol With Storage Mounted Against Engine Tunnel		$2,970.00		
BODY UPFIT OPTIONS:				
Rear Fall Protection Barrier - Automatic Pneumatic Controlled by Roof Access Ladder		$2,810.00		
Floor Dry Hopper - Air Actuated in Roof Top Storage Area		$2,775.00		
Awning on Passenger Side Of Body		$2,115.00		
STORAGE OPTIONS:				
16 Foot, 8 Bay Body In Lieu Of 18 Foot Body (36" Wide L1/R2-L2/R2)		($550.00)		
Increase L4 /R4 Compartment to 60" Wide		$272.00		
No Rear Compartment / Transverse L4/R4		($1,320.00)		
SCBA Spare Bottle Storage - Two (2) One on Each Side Aft Rear Wheel W/Side Cast Aluminum Access Doors		$560.00		
Stokes Basket / Back board Storage - Transverse Across Top Of Compartment (With TreadpLate Access Doors)		$1,033.00		
Collapsible Ladder Storage - Transverse Across Top Of Compartment (With TreadpLate Access Doors)		$900.00		
Full Width Storage - Transverse Across Top Of Compartment of L3/R3 Compartment (With TreadpLate Access Doors)		$1,265.00		
Rear Extension Ladder Storage		$1,452.00		
Adjustable Shelf (24" Deep)		$200.00		
Adjustable Slide Tray (24" Deep, 250lb rated)		$555.00		
Roll Out / Tilt Down Tray (24" Deep)		$725.00		
Heavy Slide Tray (600 LB Rated) - Floor Mounted		$650.00		
Heavy Slide Tray (1000 LB Rated) -Floor Mounted		$680.00		
Heavy Slide Tray For Rear Cargo Area (1000 LB Rated)		$1,580.00		
Roll Out Tool Board		$750.00		
Full Height Compartment Divider		$480.00		
Stainless Steel Wheel Steps For Over Wheel Well Access		$630.00		
Plastic Floor Tile compartment floors		$118.00		
Plastic Floor Tile Over Wheel Center Full Compartment Floor		$330.00		
Plastic Floor Tile installed on 24" shelf / Tray (each)		$75.00		
Plastic Floor Tile installed on 45" shelf / Tray (each)		$140.00		

11 Sperti Drive, Edgewood, KY 41017
(859)331-0360
FAX: (859)331-0399

Fire Apparatus and Custom Fabricators

DESCRIPTION	QTY	PRICE	STD. OPT.	INCLUDED OPT.
SUMMIT CUSTOM CAB HEAVY RESCUE		$294,400.00		
12 VOLT ELECTRICAL OPTIONS:				
Compartment Lighting - TecNiq LED (Both Sides)		$1,512.00		
Compartment Lighting - ROM LED (One Side)		$696.00		
Compartment Lighting - ROM LED (Both Sides)		$1,620.00		
Kussmaul Pump Plus Kit In Lieu Of Kussmaul Super Kit		$765.00		
Auto Air Eject For House Air Supply		$445.00		
Additional Cast Aluminum Siren Speaker - Recessed		$558.00		
Federal Q Siren - Recessed In Bumper		$2,706.00		
Head Light Flasher		$227.00		
Back Up Camera System - Mito Color L.E.D Monitor		$1,375.00		
Back Up Camera System - Mito Color L.E.D Monitor With Side Camera		$1,860.00		
Back Up Camera System - Saftey Vision System		$2,511.00		
Back Up Camera System - Weldon (Used With VMUX Only)		$504.00		
Whelen TA870L 72" Traffic Advisor - Mounted Above Rear Compartment		$1,802.00		
Whelen TAM85 46" Traffic Advisor - Mounted Above Rear Compartment		$1,530.00		
Recess Mount For The Whelen TAM85		$200.00		
12 Volt TecNiq K90 LED Clear Scene Lights - Two (2), One on Each body Side		$840.00		
12 Volt TecNiq K90 LED Clear Scene Lights - Four (4), One on Each Body Side, Two on Rear		$1,510.00		
12 Volt TecNiq K90 LEDClear Scene Lights - Six (6), Two on Each Body Side, Two on Rear		$1,960.00		
12 Volt Whelen M9 Series LED Clear Scene Lights - Two (2), One on Each Body Side		$934.00		
12 Volt Whelen M9 Series LED Clear Scene Lights - Four (4), One on Each Body Side, Two on Rear		$1,738.00		
12 Volt Whelen M9 Series LED Clear Scene Lights - Six (6), Two on Each Body Side, Two on Rear		$2,302.00		
12 Volt Whelen 900 Series LED Clear Scene Lights - Two (2), One on Each Body Side		$870.00		
12 Volt Whelen 900 Series LED Clear Scene Lights - Four (4), One on Each Body Side, Two on Rear		$1,650.00		
12 Volt Whelen 900 Series LED Clear Scene Lights - Six (6), Two on Each Body Side, Two on Rear		$2,170.00		
12 Volt Whelen 900 Series Halogen Clear Scene Lights - Two (2), One on Each Body Side		$430.00		

11 Sperti Drive, Edgewood, KY 41017
(859)331-0360
FAX: (859)331-0399

Fire Apparatus and Custom Fabricators

DESCRIPTION	QTY	PRICE	STD. OPT.	INCLUDED OPT.
SUMMIT CUSTOM CAB HEAVY RESCUE		$294,400.00		
12 Volt Whelen 900 Series Halogen Clear Scene Lights - Four (4), One on Each Body Side, Two on Rear		$720.00		
12 Volt Whelen 900 Series Halogen Clear Scene Lights - Six (6), Two on Each Body Side, Two on Rear		$905.00		
12 Volt Whelen Pioneer 3000 Push Up Lights - Two (2) Mounted on Body		$2,720.00		
12 Volt FRC Spectra 900 LED Clear Scene Lights - Two (2), One on Each Body Side		$1,100.00		
12 Volt FRC Spectra 900 LED Clear Scene Lights - Four (4), One on Each Body Side, Two on Rear		$2,062.00		
12 Volt FRC Spectra 900 LED Clear Scene Lights - Six (6), Two on Each Body Side, Two on Rear		$2,952.00		
Recessed Wall Light - Single Rear (Center) FRC Evolution 12000 Lumen, L.E.D, 12 Volt FCA210-V12		$1,321.00		
Recessed Wall Light - Two (2) One On Each Side (Center) FRC Evolution 12000 Lumen, L.E.D, 12 Volt FCA210-V13		$2,192.00		
Cab Brow Light - Single (Center) Over Cab - Whelen PFA2 Pioneer 7400 Lumen, L.E.D, 12 Volt		$1,680.00		
Cab Brow Light - Single (Center) Over Cab - Whelen PFP2 Pioneer 16000 Lumen, L.E.D, 12 Volt		$2,103.00		
Cab Brow Light - Single (Center) Over Cab - FRC FCA800-V08 8,000 Lumen, L.E.D, 12 Volt		$1,555.00		
Cab Brow Light - Single (Center) Over Cab - FRC FCA800-V15 15,000 Lumen, L.E.D, 12 Volt		$1,686.00		
Cab Brow Light - Single (Center) Over Cab - FRC SPA800-Q15 15,000 Lumen, L.E.D, 12 Volt		$1,899.00		
Cab Brow Light - Single (Center) Over Cab - FRC SPA800-Q20 20,000 Lumen, L.E.D, 12 Volt		$2,093.00		
120/240 VOLT ELECTRICAL OPTIONS				
10KW Hydraulic Generator In Lieu Of 25KW PTO Generator		$2,530.00		
15KW Hydraulic Generator In Lieu Of 25KW PTO Generator		$4,800.00		
20KW Hydraulic Generator In Lieu Of 25KW PTO Generator		$7,826.00		
30KW Hydraulic Generator In Lieu Of 25KW PTO Generator		$17,564.00		
Remote Generator Activation - Front Bumper		$250.00		
Exterior Receptacles - Covered Duplex 5-20		$285.00		
Interior 120 Volt Receptacles - Cab, Duplex 5-15		$320.00		
Interior 120 Volt Receptacles - Body Compartrment, Duplex 5-15		$250.00		
220 Volt Receptacle - Body Compartment		$295.00		
Electric Cord Reel - 200' 10/3 Black Cable		$2,180.00		
Electric Cord - 200' 10/3 Yellow Cord In Lieu Of The Black		$180.00		

Fire Apparatus and Custom Fabricators

DESCRIPTION	QTY	PRICE	STD. OPT.	INCLUDED OPT.
SUMMIT CUSTOM CAB HEAVY RESCUE		$294,400.00		
Electric Cord Ball Stop		$25.00		
Electric Junction Box - Akron With 4 L5-20 Receptacles		$425.00		
Electric Junction Box - Circle D With 4 L5-20 Receptacles		$545.00		
Fair Lead, Cord Reel - Hannay 4 Way		$180.00		
Sumit Extendible or Swing Out Fair Lead		$340.00		
Junction Box Mounting Bracket - Aluminum		$150.00		
Rear Mount Tri-Pod Lights - Akron ELNB-750-Pod 120Volt, 750 WattTripods (Per Pair) * Requires Exterior Receptacle		$1,665.00		
Rear Mount Tri-Pod Lights - FRC FCA600-S75 120 Volt 750 Watt Tripods (Per Pair) * Requires Exterior Receptacle		$1,815.00		
Rear Mount Tri-Pod Lights - FRC FCA600-M10 1000 Watt Tripods (Per Pair) * Requires Exterior Receptacle		$1,932.00		
Rear Mount Tri-Pod Lights - FRC FCA600-M12 240 Volt, 1000 Watt Tripods (Per Pair) * Requires 240 Volt Exterior Receptacle		$1,932.00		
Rear Mount Tri-Pod Lights - FRC OPA600-S75 120 Volt 750 Watt Tripods (Per Pair) * Requires Exterior Receptacle		$1,834.00		
Rear Mount Tri-Pod Lights - FRC OPA600-M10 1000 Watt Tripods (Per Pair) * Requires Exterior Receptacle		$1,997.00		
Rear Mount Tri-Pod Lights - FRC OPA600-M12 240 Volt, 1000 Watt Tripods (Per Pair) * Requires Exterior 240 Volt Receptacle		$1,997.00		
Recessed Wall Light - Single Rear (Center) FRC 500 Watt,120 Volt FCA210-S50		$645.00		
Recessed Wall Light - Single Rear (Center) FRC 750 Watt,120 Volt FCA210-S75		$698.00		
Recessed Wall Light - Single Rear (Center) FRC 1000 Watt, 120 Volt FCA210-M10		$869.00		
Recessed Wall Light - Single Rear (Center) FRC 1000 Watt, 240 Volt FCA210-M12		$894.00		
Recessed Wall Light - Two (2) FRC 500 Watt,120 Volt FCA210-S50 One On Each Side (Center)		$1,320.00		
Recessed Wall Light - Two (2) FRC 750 Watt,120 Volt FCA210-S75 One On Each Side (Center)		$1,408.00		
Recessed Wall Light - Two (2) FRC 1000 Watt, 120 Volt FCA210-M10 One On Each Side(Center)		$1,408.00		
Recessed Wall Light - Two (2) FRC 1000 Watt, 240 Volt FCA210-M12 One On Each Side(Center)		$1,650.00		
Recessed Wall Light - Two (2) FRC 12000 Lumen, L.E.D, 12 Volt FCA210-V12 One On Each Side (Center)		$2,418.00		
Recessed Wall Light - Four (4) FRC 500 Watt,120 Volt FCA210-S50 One On Each Side (Center)		$2,580.00		

SUMMIT
Fire Apparatus and Custom Fabricators

DESCRIPTION	QTY	PRICE	STD. OPT.	INCLUDED OPT.
SUMMIT CUSTOM CAB HEAVY RESCUE		$294,400.00		
Recessed Wall Light - Four (4) FRC 750 Watt,120 Volt FCA210-S75 One On Each Side (Center)		$2,756.00		
Recessed Wall Light - Four (2) FRC 1000 Watt, 120 Volt FCA210-M10 One On Each Side(Center)		$2,756.00		
Recessed Wall Light - Four (4) FRC 1000 Watt, 240 Volt FCA210-M12 One On Each Side(Center)		$3,220.00		
Recessed Wall Light - Four (42) FRC 12000 Lumen, L.E.D, 12 Volt FCA210-V12 One On Each Side (Center)		$4,766.00		
Light Tower - Wil-Burt NS4.5-4000 Mounted In RT1 Body Compartment		$18,406.00		
Light Tower - Wil-Burt NS4.5-6000 Mounted In RT1 Body Compartment		$18,780.00		
Light Tower - Wil-Burt NS4.5-9000 Mounted In RT1 Body Compartment		$19,757.00		
Dual Tilt Feature		$359.00		
Light Tower - Mounted On Cab In Lieu Of Body		$1,050.00		
Light Tower Fairing - Aluminum, Cab Mounted, Painted to Match		$1,780.00		
Light Tower Fairing - Treadplate Aluminum, Cab Mounted		$1,300.00		
PAINT:				
Two Tone Chassis - Custom Cab MFD		$3,550.00		
Two Tone Chassis - Custom Cab LFD		$3,620.00		
Painting Jambs in addition to paint (4 Door)		$1,200.00		
Two Tone Body		$2,550.00		
Body Undercoating		$415.00		
Painted Steel Wheels to Job Color		$460.00		

11 Sperti Drive, Edgewood, KY 41017
(859)331-0360
FAX: (859)331-0399

Fire Apparatus and Custom Fabricators

DESCRIPTION	QTY	PRICE	STD. OPT.	INCLUDED OPT.
SUMMIT CUSTOM CAB HEAVY RESCUE		$294,400.00		

11 Sperti Drive, Edgewood, KY 41017
(859)331-0360
FAX: (859)331-0399

SUMMIT

Fire Apparatus and Custom Fabricators

CUSTOM DESIGN IS OUR SPECIALTY, QUALITY IS OUR COMMITMENT!

11 Sperti Drive Edgewood, KY 41017 (859) 331-0360 www.SummitFireApparatus.com

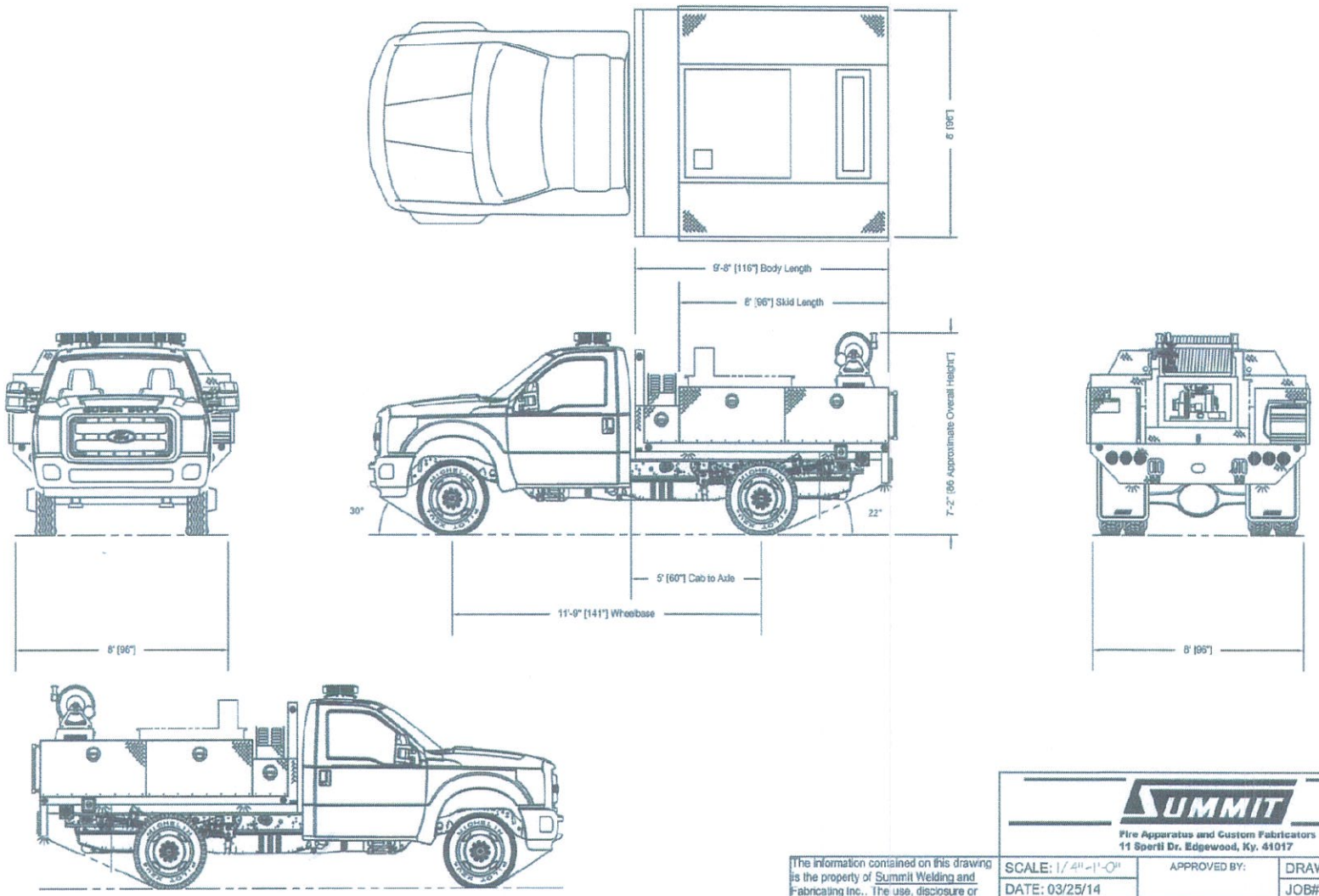

Time Modified: 9:56 A.M.
Date Modified: 3/25/2014
Date Created: 10/22/2010
Drawing File: F:\Drawings\Proposal\Rescue\MiniRescue\Demo\F550BU.dwg
Scale: 1=48

The information contained on this drawing is the property of Summit Welding and Fabricating Inc.. The use, disclosure or reproduction of this information without the prior written permission of Summit Welding and Fabricating Inc. is prohibited. This drawing is for bid or proposal purposes only and may not reflect the final unit!

SUMMIT
Fire Apparatus and Custom Fabricators
11 Sperti Dr. Edgewood, Ky. 41017

SCALE: 1/4"=1'-0"	APPROVED BY:	DRAWN BY: RSC
DATE: 03/25/14		JOB# Demo

Summit Fire Apparatus

Brush Unit

DRAWING NUMBER F550BU

SUMMIT
Fire Apparatus and Custom Fabricators

DESCRIPTION	QTY	PRICE	STD. OPT	INCLUDED OPT.
SUMMIT 116" x 96" PLATFORM BRUSH UNIT		93,500.00		
CHASSIS - 2 DOOR	1			
2014 Ford F-550 Chassis XL				
4X4 SD REGULAR CAB 141" WB DRW XL				
POWERTRAIN:				
Powerstroke 6.7L V-8 Ohv Direct Diesel Injection 32 Valve Intercooled Turbo Diesel Engine				
357 Amp Dual Alternator				
750 Amp (Total) 78 Amp Hours (Ah) (Total) Battery Dual Batteries With Run Down Protection				
Engine Block Heater				
6-Speed Electronic Selectshift Automatic Transmission With Overdrive, Lock-Up, Driver Selection				
Part-Time Four-Wheel Drive With Electronic Transfer Case Shift				
Auto Locking Hubs				
Driveline Traction Control				
Limited Slip W/4.88 Axle Ratio				
Stainless Steel Exhaust				
Hydraulic Power-Assist Re-Circulating Ball Steering				
4-Wheel Disc Brakes With Front And Rear Vented Discs				
Firm Ride Suspension				
Mono-Beam Non-Independent Front Suspension				
Front Anti-Roll Bar				
Front Coil Springs				
Hd Front Shocks				
Rigid Rear Axle				
Rear Leaf Suspension				
Rear Anti-Roll Bar				
Hd Rear Leaf Springs				
Hd Rear Shocks				
Front And Rear 19.5" X 6.00" Argent Steel Wheels				
Lt225/70Sr19.5 Bsw As Front And Rear Tires				
SAFETY				
4-Wheel Anti-Lock Braking System				
Dual Airbags, Seat Mounted Driver And Passenger Side-Impact Airbags, Curtain Overhead Airbags				
Front Height Adjustable Seatbelts				
COMFORT AND CONVENIENCE				
Air Conditioning, Underseat Ducts				
Am/Fm Stereo, Clock, Seek-Scan, 2 Speakers, Fixed Antenna				
2 12V Dc Power Outlets, Retained Accessory Power				
Analog Instrumentation Display Includes Tachometer, Oil Pressure Gauge, Engine Temperature Gauge, Turbo/Supercharger Boost				

Fire Apparatus and Custom Fabricators

DESCRIPTION	QTY	PRICE	STD. OPT	INCLUDED OPT.
SUMMIT 116" x 96" PLATFORM BRUSH UNIT		93,500.00		
Warning Indicators Include Oil Pressure, Engine Temperature, Battery, Lights On, Key, Low Fuel, Door Ajar, Service Interval, Brake Fluid				
Steering Wheel With Tilt And Telescopic Adjustment				
Interior Lights Include Dome Light With Fade				
Glove Box, Front Cupholder, Instrument Panel Bin, Driver And Passenger Door Bins, Upfitter Switches				
SEATING AND INTERIOR				
Seating Capacity Of 3 * 40-20-40 Split-Bench Front Seat With Adjustable Head Restraints, Center Armrest With Storage				
4-Way Adjustable Driver Seat Includes Lumbar Support				
4-Way Adjustable Passenger Seat				
Vinyl Faced Front Seats With Vinyl Back Material				
Full Cloth Headliner, Full Vinyl/Rubber Floor Covering, Plastic/Rubber Gear Shift Knob, Chrome Interior Accents				
EXTERIOR FEATURES				
Side Impact Beams, Fully Galvanized Steel Body Material				
Black Fender Flares				
Black Front Windshield Molding				
Black Window Moldings				
Black Door Handles				
Black Grille				
2 Doors				
Trailer Harness				
Driver And Passenger Power Remote Black Heated Convex Spotter Folding Manual Extendable Trailer Outside Mirrors With Turn Signal Indicators				
Front Black Bumper With Front Tow Hooks				
Additional Exterior Lights Include Cab Clearance Lights, Underhood Light				
Clearcoat Monotone Paint				
EMISSIONS				
425 50 State Emissions				
DIMENSIONS AND CAPACITIES				
Output 300 Hp @ 2,800 Rpm Torque 660 Lb.-Ft. @ 1,600 Rpm				
1St Gear Ratio 3.974				
2Nd Gear Ratio 2.318				
3Rd Gear Ratio 1.516				
4Th Gear Ratio 1.149				
5Th Gear Ratio 0.858				
6Th Gear Ratio .0674				
Reverse Gear Ratio 3.128				
Gvwr 18,000 Lbs.				

11 Sperti Drive, Edgewood, KY 41017
(859)331-0360
FAX: (859)331-0399

SUMMIT
Fire Apparatus and Custom Fabricators

DESCRIPTION	QTY	PRICE	STD. OPT	INCLUDED OPT.
SUMMIT 116" x 96" PLATFORM BRUSH UNIT		93,500.00		
Front GAWR Weight 7,000 lbs.				
Rear GAWR Weight 13,660 lbs.				
Payload 10,995 lbs.				
Front Axle Capacity 7,000 Lbs.				
Rear Axle Capacity 13,660 Lbs.				
Front Spring Rating 7,000 Lbs.				
Rear Spring Rating 13,660 Lbs.				
Front Tire/Wheel Capacity 7,500 Lbs.				
Rear Tire/Wheel Capacity 15,000 Lbs.				
Towing Capacity 16,000 Lbs.				
5Th-Wheel Towing Capacity 17,100 Lbs.				
Front Legroom 41.1 "				
Front Headroom 40.7 "				
Front Hiproom 67.6 "				
Front Shoulder Room 68.0 "				
Passenger Area Volume 65.9 Cu.Ft.				
Body Width 95.2 "				
Body Height 80.7 "				
Wheelbase 140.8 "				
Cab To Axle 60.0 "				
Axle To End Of Frame 47.6 "				
Front Tread 74.8 " Rear Tread 74.0 "				
Fuel Tank 40.0 Gal.				
SELECTED OPTIONS				
47A Ambulance Prep Pkg				
41H Engine Block Heater *Std In Ak, Co, Ia, Id, Me, Mi, Mn, Mt, Nd, Nh, Ny, Sd, Vt, Wi, Wy				
531 Trailer Tow Pkg -Inc: Trailer Brake Wiring Kit				
525 Cruise Control				
98R Operator Commanded Regeneration (Ocr)				
NFPA 2601 Chassis Upfit, Includes Vdr, Seatbelts Sensors, And Red Seat Belts In Lieu Of Grey				
CHASSIS UPFIT				
NFPA Compliant Steps - 2 Door Cab Standard Step	1			
Grab Handles, Cab - Delete	1			
Rear Tow Eyes - Painted Steel (Thru Body)	2			
Vehicle Data Recorder - Provided By Chassis Manufacturer	1			
Seatbelt Warning System - Provided By Chassis Manufacturer	1			
Wheels - Unfinished (Factory Color)	1			
Tire Pressure Monitoring System - Valve Stem Indicators	6			
Rear Mud Flaps	2			
Fluid Identifcation Plate	1			
Fuel Type Label - Diesel	1			

Fire Apparatus and Custom Fabricators

DESCRIPTION	QTY	PRICE	STD. OPT	INCLUDED OPT.
SUMMIT 116" x 96" PLATFORM BRUSH UNIT		93,500.00		
Seating Label - Maximum Seating Of 2	1			
Vehicle Height Label	1			
Seatbelt Warning Label	1			
Riding On Step Warning Label - Rear of Body	1			
Helmet In Cab Warning Label	1			
NFPA Helmet Storage - Department To Store In Body	1			
BODY - 116"	1			
Body Construction - Combination Formed Sheet / Extruded	1		x	
Body Subframe - Aluminum Extruded	1		x	
Body Floor Material - 190" 3003 Aluminum Treadplate	1		x	
Bulkhead and Apron - .125" 3003 Smooth Aluminum				
Body Mounting	1		x	
Polymer Isolation Strips - Chassis Frame	1		x	
Corrosion Protection Pkg - Anti Corrosion Compound and Nylon Spacers on All Fasteners				
Construction - Aluminum	1		x	
Body Dimensions - 116" Long x 50" High, 96" Wide	1		x	
Compartment Type - Add On Configuration	1		x	
Compartment Interiors - Unfinished Aluminum	1		x	
Compartment Floors - Lower With Drain Holes	1		x	
Rear Drop For ICC Underide - Steel	1		x	
Rear Apron - Aluminum Treadplate (Contoured)	1		x	
Fuel Fill, Drivers Side Rear Under Body (Aft) - Factory Plastic	1		x	
DEF Fill, Drivers Side Rear Under Body (Fore) - Factory Plastic	1		x	
COMPARTMENTATION				
Side & Cross Box With Open Rear Cargo Area	1		x	
Cross Compartment - Transverse	1		x	
L1 / R1 Transverse Compartment Dimensions - 16" Wide x 24" High x Transverse	1		x	
L2 Compartment Dimensions - 96" Wide x 24" High x 23" Deep, Divided Compartment (2 Doors)	1		x	
R2 Compartment Dimensions - 96" Wide x 24" High x 23" Deep, Divided Compartment (2 Doors)	1		x	
R2 Adjustable Shelf Hard ware - P100 Aluminum Unistrut	2			x
Rear Cargo Area Dimensions - 50" Wide x 96" Deep	1		x	
Compartment Doors - Swing Down Shoe Box Style Doors	6		x	
Door Finish - Treadplate Aluminum	1		x	
Door Seal - Parameter Closed Cell Rubber	1		x	
Rain Gutter - Integral To Box Jamb	1		x	
Door Locks - Delete	1		x	

SUMMIT
Fire Apparatus and Custom Fabricators

DESCRIPTION	QTY	PRICE	STD. OPT	INCLUDED OPT.
SUMMIT 116" x 96" PLATFORM BRUSH UNIT		93,500.00		
BODY UPFIT				
Grab Rails - Two (2) One Each Side Of Rear Compartments	1		x	
Folding Steps - Rear Apron Mount	2		x	
SKID UNIT:				
Skid Unit Type - Full Poly	x			
Tank Size - 200 Gallon	x			
Tank Type - Poly	x			
NFPA Approved Baffling	x			
Fill Tower - Std	x			
Engine - 11 HP Briggs & Stratton Gasoline Powered	x			
Start - Manual	x			
Pump - 240 Max PS1, 110 GPM @ 50PSI	x			
Primer - Exhaust	x			
Painted Steel Manifold	x			
Valves - 1/4 Turn Industrial	x			
Discharges - 2 x 1", 2 x 1.5"	x			
1.5" Preconnect Hose Trough	x			
Hannay Hose Reel - 100' of 1" Electric Rewind	x			
100' Of Red Booster Hose	x			
Foam System - Delete	x			
12 VOLT ELECTRICAL REQUIRMENTS				
12 Volt Elctrical System - Non Multiplex System	1		x	
Wiring Requirments - NFPA 1901	1		x	
SAE Practices & FMVSS Compliant	1		x	
Wiring - GXL Stranded Copper	1		x	
12V Dc Voltage Output Testing & Documentation	1		x	
Switch Panel - Ford Auxiliary Switches - One Master Switch Warning System	1		x	
Reserve Capacity Test:	1		x	
Alternator Performance Test At Idle:	1		x	
Alternator Performance Test At Full Load:	1		x	
Low Voltage Alarm Test:	1		x	
Documentation - NFPA Test Results	1		x	
Battery Disconnect Switch - Solenoid Activated From Ignition Switch	1		x	
Battery Light - Green L.E.D. Dash Mounted	1		x	
Clearance / Marker Lights - Tecniq P2 L.E.D	6		x	
License Plate Bracket and Light - Arrow	1		x	
Brake Lights, - Tecniq T40 Red L.E.D.	2		x	
Turn Lights - Tecniq T41 Amber L.E.D.	2		x	
Backup Lights - Tecniq T40 Clear L.E.D.	2		x	

SUMMIT
Fire Apparatus and Custom Fabricators

DESCRIPTION	QTY	PRICE	STD. OPT	INCLUDED OPT.
SUMMIT 116" x 96" PLATFORM BRUSH UNIT		93,500.00		
Engine Compartment Light - Grote 61491-5 Switched	1		x	
Ground Area Lighting 2 Door Cab - Tecniq L.E.D	2		x	
Ground Area Lighting Body - Tecniq L.E.D	2		x	
Rear Cargo Area Light - TecNiq	1		x	
Compartment Lighting - TecNiq L.E.D Single Dome	6		x	
Compartment Ajar Light - Weldon LED	1		x	
Low Voltage Alarm	1		x	
Battery Charging Receptacle -	1		x	
Light Bar - Whelen 55" Freedom L.E.D.	1		x	
Blocking Right Away	1		x	
Lower Zone A Warning Lights - Whelen M2 Series L.E.D.	4		x	
Lower Zone A Warning Light Chrome Flange - Whelen M2FC flange	4		x	
Lower Zone B&D Intersection Lights - Whelen M2 Series L.E.D	2		x	
Lower Zone B&D Intersection Light Chrome Flange - Whelen M2FC flange	2		x	
Lower Zone B&D Rear Warning Lights - Whelen 600 Series	2		x	
Lower Zone B&D Rear Warning Light Chrome Flange - Whelen 6Eflange	2		x	
Lower Zone C Warning Lights - Whelen 600 Series	2		x	
Upper Zone B & D Warning Lights - Whelen 600 Series	2		x	
Upper Zone B & D Warning Light Chrome Flange - Whelen 6Eflange	2		x	
Upper Zone C Warning Lights - Whelen 600 Series	2		x	
Upper Zone C Warning Light Chrome Flange - Whelen 6Eflange	2		x	
Electronic Siren - Whelen 295SLSA1	1		x	
Siren Speaker - Code 3 PB100B	1		x	
PAINTING AND STRIPING				
Undercoating - Delete	1		x	
PPG Two Stage Urthane - Body Job Color	1		x	
NFPA Perimeter - 4" White Reflective Cab	1		x	
NFPA Perimeter - 4" White Reflective Body	1		x	
NFPA Chevron 6' Red/Amber Reflective - Body Only (No Rear Door)	1		x	
WARRANTIES				
Limited Warranty (1-Year)	1		x	
Paint Warranty (7-Year)	1		x	
Electrical Warranty (5-Year)	1		x	
Body Structural Warranty (10-Year)	1		x	

11 Sperti Drive, Edgewood, KY 41017
(859)331-0360
FAX: (859)331-0399

SUMMIT
Fire Apparatus and Custom Fabricators

DESCRIPTION	QTY	PRICE	STD. OPT	INCLUDED OPT.
SUMMIT 116" x 96" PLATFORM BRUSH UNIT		93,500.00		
112 " PLATFORM BRUSH UNIT OPTIONS LIST:				
POPULAR CHASSIS OPTIONS: FORD				
Super Cab (Extend Cab) In Lieu Of The 2 Door Cab.		2,000.00		
Crew Cab (Extend Cab) In Lieu Of The 2 Door Cab.		3,000.00		
F450, 15,000 GVWR in Lieu Of The F550, 18,000 GVWR		(1,000.00)		
Limited Slip Rear Axle		360.00		
MAX-Trac All Terrain Tires		245.00		
PTO Provision		280.00		
Ambulance Prep Package		1,135.00		
Electronic Shift on the Fly		215.00		
Electronic Brake Controller		285.00		
Payload Upgrade Package - 19,500 lb. GVWR F550 Only		1,155.00		
Power Equipment Group -Reg. Cab		895.00		
Power Equipment Group - Crew Cab		1,105.00		
XL Value Group		225.00		
NFPA 2601 Upfit VDR & Seat Belt Monitoring System		2,965.00		
Delete 4 wheel drive option		(2,500.00)		
POPULAR CHASSIS OPTIONS: RAM				
2014 Ram 5500 Reg Cab ST 4x4 DRW, Diesel/Auto Chassis In Lieu Of Ford F550		600.00		
4 Door Crew Cab In Lieu Of 2 Door Cab		4,350.00		
All Traction Tires		250.00		
PTO Provision		205.00		
Electronic Brake Controller		230.00		
Power Equipment Group -Reg. Cab		230.00		
Power Equipment Group - Crew Cab		400.00		
SLT Trim Group		3,500.00		
Delete 4 wheel drive option		(2,900.00)		
CHASSIS ACCESSORIES:				
NFPA Complaint Full Punch Raised treadplate running boards In Lieu of Base Step		425.00		
Center Console for radio & siren - Treadplate Aluminum (No Storage)		775.00		
Center Consolefor radio & siren - Smooth Aluminum (No Storage)		720.00		
Book / Binder Misc Storage for console		400.00		

11 Sperti Drive, Edgewood, KY 41017
(859)331-0360
FAX: (859)331-0399

SUMMIT
Fire Apparatus and Custom Fabricators

DESCRIPTION	QTY	PRICE	STD. OPT	INCLUDED OPT.
SUMMIT 116" x 96" PLATFORM BRUSH UNIT		93,500.00		
Rubberized coating for console		260.00		
Switch Panel in console in lieu of Ford Auxiliary		210.00		
Raised or Angled switch panel on console		115.00		
Trailer Hitch - 2" Class 4 receiver (includes 4 way plug)		990.00		
Seven way trailer plug in lieu of 4 way		70.00		
Warn Powder Coat Steel Front Winch Mount / Brush Guard w/ receiver		1,730.00		
Powder Coat Steel Front Head Light Guards		380.00		
Warn Stainless Steel Front Winch Mount / Brush Guard w/ receiver		2,280.00		
Stainless Steel Front Head Light Guards		450.00		
Heavy Duty Hammer tone winch ready Bumper with driving light cut outs		1,900.00		
Heavy Duty Hammer tone 1/4" plate Grille and brush guards		560.00		
Heavy Duty Polished Stainless Steel Grille and Brush Guards		1,187.00		
Portable 9500 lb Winch with wireless remote		1,235.00		
Fixed Warn 12,000 lb Winch with wireless remote		1,305.00		
Fixed Warn 15,000 lb Winch with wireless remote		1,600.00		
Stainless Steel Wheel Simulators		605.00		
BODY OPTIONS:				
112" Body In Lieu Of 116" Body - L2 & R2 Compartments To Be 92" Wide Plus Custom Aluminum Skid Required		1,375.00		
Lowered Transverse Compartment For Crosslay Install - 16" Wx 18" H x Transverse		(50.00)		
Right Side Compartment 72" Wide In Lieu Of 96" Wide		(75.00)		
STORAGE OPTIONS:				
Adjustable Shelf (23" Deep)		200.00		
Hard Suction Storage Troughs On Left Side Compartment		780.00		
PUMP OPTIONS				
18 HP Gasoline Engine Pump In Lieu Of 11 Hp		2,890.00		
250 Gallons Of Water In lieu Of 200		200.00		
300 Gallons Of Water In Lieu Of 200		350.00		
Custom Aluminum Skid In Lieu Of Poly		1,275.00		
Under Skid Storage - Aluminum Skid		400.00		
Stainless Steel Manifold And Akron Valves		1,100.00		
Around The Pump Foam System and 20 Gallon Foam Cell		1,375.00		
Electric Power From Chassis In Lieu Of Battery		400.00		
Crosslays Above Transverse Compartment InLieu of 1.5" Hose Trough		2,600.00		

SUMMIT
Fire Apparatus and Custom Fabricators

DESCRIPTION	QTY	PRICE	STD. OPT	INCLUDED OPT.
SUMMIT 116" x 96" PLATFORM BRUSH UNIT		93,500.00		
12 VOLT ELECTRICAL OPTIONS				
Kussmaul Battery Conditioner with Auto Eject inlieu of plug		1,130.00		
Driving Lights in HD bumper option		450.00		
LED Strip lighting in lieu of single LED compartment light		1,300.00		
Additional LED Light on Cargo Area Bulkhead		125.00		
Additional LED Strip Light in Transverse Compartment		170.00		
LED Ground lights under front of body		275.00		
LED Ground light under front bumper		205.00		
LED Browlight on front of cab		1,550.00		
Whelen TAM85 46" Traffic Advisor - On Bulk Head		1,530.00		
12 Volt FRC Evolution LED FCA530-V08 Push Up Lights - Two (2) Mounted on Body		2,594.00		
PAINT:				
Two Tone Chassis - Two Door		$2,810.00		
Two Tone Chassis - Four Door		$3,210.00		
Painting Jambs and under hood in addition to paint (2 Door)		$600.00		
Painting Jambs and under hood in addition to paint (4 Door)		$1,200.00		
Two Tone Body		$2,550.00		
Painted Steel Wheels to Job Color		$460.00		
Body Undercoating		$375.00		
STRIPING & LETTERING:				
NFPA Perimeter Stripe 4"		730.00		
1- 4 -1 NFPA Perimeter Stripe 4" with 1" stripe above and below		900.00		
Z pattern in stripe		150.00		
Sixty 3" Reflective Lettering		575.00		

11 Sperti Drive, Edgewood, KY 41017
(859)331-0360
FAX: (859)331-0399

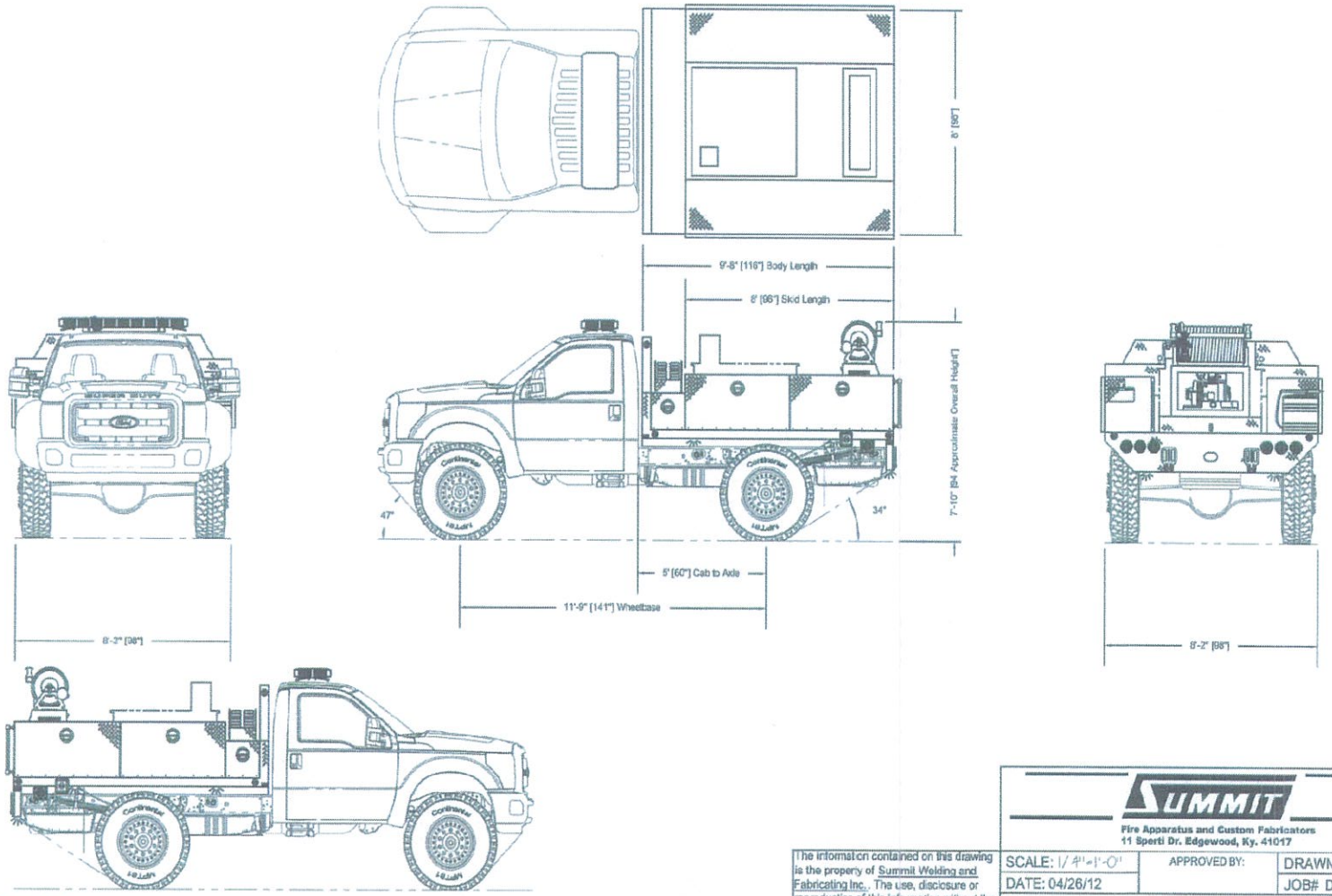

Time Modified: 9:36 A.M.
Date Modified: 3/25/2014
Date Created: 10/22/2010
Drawing File: F:\Drawings\Proposal\Rescue\MiniRescue\Demo\F554BU.dwg
Scale: 1=48

The information contained on this drawing is the property of Summit Welding and Fabricating Inc.. The use, disclosure or reproduction of this information without the prior written permission of Summit Welding and Fabricating Inc. is prohibited. This drawing is for bid or proposal purposes only and may not reflect the final unit!

SUMMIT

Fire Apparatus and Custom Fabricators
11 Sperti Dr. Edgewood, Ky. 41017

SCALE: 1/4"=1'-0"	APPROVED BY:	DRAWN BY: RSC
DATE: 04/26/12		JOB# DemoO
Summit Fire Apparatus		
Brush Unit		DRAWING NUMBER F554BU

Fire Apparatus and Custom Fabricators

DESCRIPTION	QTY	PRICE	STD. OPT	INCLUDED OPT.
SUMMIT 116" x 96" PLATFORM BRUSH UNIT		$123,084.00		
CHASSIS - 2 DOOR	1			
2014 Ford F-550 Chassis XL				
4X4 SD REGULAR CAB 141" WB DRW XL				
POWERTRAIN:				
Powerstroke 6.7L V-8 Ohv Direct Diesel Injection 32 Valve Intercooled Turbo Diesel Engine				
357 Amp Dual Alternator				
750 Amp (Total) 78 Amp Hours (Ah) (Total) Battery Dual Batteries With Run Down Protection				
Engine Block Heater				
6-Speed Electronic Selectshift Automatic Transmission With Overdrive, Lock-Up, Driver Selection				
Part-Time Four-Wheel Drive With Electronic Transfer Case Shift				
Auto Locking Hubs				
Driveline Traction Control				
Limited Slip W/4.88 Axle Ratio				
Stainless Steel Exhaust				
Hydraulic Power-Assist Re-Circulating Ball Steering				
4-Wheel Disc Brakes With Front And Rear Vented Discs				
Firm Ride Suspension				
Mono-Beam Non-Independent Front Suspension				
Front Anti-Roll Bar				
Front Coil Springs				
Hd Front Shocks				
Rigid Rear Axle				
Rear Leaf Suspension				
Rear Anti-Roll Bar				
Hd Rear Leaf Springs				
Hd Rear Shocks				
Front And Rear 19.5" X 6.00" Argent Steel Wheels				
Lt225/70Sr19.5 Bsw As Front And Rear Tires				
SAFETY				
4-Wheel Anti-Lock Braking System				
Dual Airbags, Seat Mounted Driver And Passenger Side-Impact Airbags, Curtain Overhead Airbags				
Front Height Adjustable Seatbelts				
COMFORT AND CONVENIENCE				
Air Conditioning, Underseat Ducts				
Am/Fm Stereo, Clock, Seek-Scan, 2 Speakers, Fixed Antenna				
2 12V Dc Power Outlets, Retained Accessory Power				
Analog Instrumentation Display Includes Tachometer, Oil Pressure Gauge, Engine Temperature Gauge, Turbo/Supercharger Boost				

Fire Apparatus and Custom Fabricators

DESCRIPTION	QTY	PRICE	STD. OPT	INCLUDED OPT.
SUMMIT 116" x 96" PLATFORM BRUSH UNIT		$123,084.00		
Warning Indicators Include Oil Pressure, Engine Temperature, Battery, Lights On, Key, Low Fuel, Door Ajar, Service Interval, Brake Fluid				
Steering Wheel With Tilt And Telescopic Adjustment				
Interior Lights Include Dome Light With Fade				
Glove Box, Front Cupholder, Instrument Panel Bin, Driver And Passenger Door Bins, Upfitter Switches				
SEATING AND INTERIOR				
Seating Capacity Of 3 * 40-20-40 Split-Bench Front Seat With Adjustable Head Restraints, Center Armrest With Storage				
4-Way Adjustable Driver Seat Includes Lumbar Support				
4-Way Adjustable Passenger Seat				
Vinyl Faced Front Seats With Vinyl Back Material				
Full Cloth Headliner, Full Vinyl/Rubber Floor Covering, Plastic/Rubber Gear Shift Knob, Chrome Interior Accents				
EXTERIOR FEATURES				
Side Impact Beams, Fully Galvanized Steel Body Material				
Black Fender Flares				
Black Front Windshield Molding				
Black Window Moldings				
Black Door Handles				
Black Grille				
2 Doors				
Trailer Harness				
Driver And Passenger Power Remote Black Heated Convex Spotter Folding Manual Extendable Trailer Outside Mirrors With Turn Signal Indicators				
Front Black Bumper With Front Tow Hooks				
Additional Exterior Lights Include Cab Clearance Lights, Underhood Light				
Clearcoat Monotone Paint				
EMISSIONS				
425 50 State Emissions				
DIMENSIONS AND CAPACITIES				
Output 300 Hp @ 2,800 Rpm Torque 660 Lb.-Ft. @ 1,600 Rpm				
1St Gear Ratio 3.974				
2Nd Gear Ratio 2.318				
3Rd Gear Ratio 1.516				
4Th Gear Ratio 1.149				
5Th Gear Ratio 0.858				
6Th Gear Ratio .0674				
Reverse Gear Ratio 3.128				
Gvwr 18,000 Lbs.				

11 Sperti Drive, Edgewood, KY 41017
(859)331-0360
FAX: (859)331-0399

SUMMIT
Fire Apparatus and Custom Fabricators

DESCRIPTION	QTY	PRICE	STD. OPT	INCLUDED OPT.
SUMMIT 116" x 96" PLATFORM BRUSH UNIT		$123,084.00		
Front GAWR Weight 7,000 lbs.				
Rear GAWR Weight 13,660 lbs.				
Payload 10,995 lbs.				
Front Axle Capacity 7,000 Lbs.				
Rear Axle Capacity 13,660 Lbs.				
Front Spring Rating 7,000 Lbs.				
Rear Spring Rating 13,660 Lbs.				
Front Tire/Wheel Capacity 7,500 Lbs.				
Rear Tire/Wheel Capacity 15,000 Lbs.				
Towing Capacity 16,000 Lbs.				
5Th-Wheel Towing Capacity 17,100 Lbs.				
Front Legroom 41.1 "				
Front Headroom 40.7 "				
Front Hiproom 67.6 "				
Front Shoulder Room 68.0 "				
Passenger Area Volume 65.9 Cu.Ft.				
Body Width 95.2 "				
Body Height 80.7 "				
Wheelbase 140.8 "				
Cab To Axle 60.0 "				
Axle To End Of Frame 47.6 "				
Front Tread 74.8 " Rear Tread 74.0 "				
Fuel Tank 40.0 Gal.				
SELECTED OPTIONS				
47A Ambulance Prep Pkg				
41H Engine Block Heater *Std In Ak, Co, Ia, Id, Me, Mi, Mn, Mt, Nd, Nh, Ny, Sd, Vt, Wi, Wy				
68M Payload Upgrade Pkg -Inc: Upgraded Frame, Upgraded Rear Axle, Upgraded Springs, Low Deflection/High Capacity, Increased Gvwr To 19,5000				
531 Trailer Tow Pkg -Inc: Trailer Brake Wiring Kit				
525 Cruise Control				
98R Operator Commanded Regeneration (Ocr)				
NFPA 2601 Chassis Upfit, Includes Vdr, Seatbelts Sensors, And Red Seat Belts In Lieu Of Grey				
CHASSIS UPFIT				
HD Dana 80 Steering Axle In Lieu Of Factory 7000lb Axle	1		x	
Rear offset hubs	2		x	
Front Fender Flares	2		x	
20"x10" Steel reversible wheels	4		x	
335 75R 20G Rated Super Single Tires	4		x	
2.5" Pan Hard Bracket	1		x	
Replacement HD Sway Bar (Front)	1		x	

11 Sperti Drive, Edgewood, KY 41017
(859)331-0360
FAX: (859)331-0399

SUMMIT
Fire Apparatus and Custom Fabricators

DESCRIPTION	QTY	PRICE	STD. OPT	INCLUDED OPT.
SUMMIT 116" x 96" PLATFORM BRUSH UNIT		$123,084.00		
Replacement HD Sway Bar (Rear)	1		x	
Replacement 8000 lb Coil Springs	2		x	
NFPA Compliant Steps - 2 Door Cab Standard Step	1		x	
Grab Handles, Cab - Delete	1			x
Rear Tow Eyes - Painted Steel (Thru Body)	2		x	
Vehicle Data Recorder - Provided By Chassis Manufacturer	1		x	
Seatbelt Warning System - Provided By Chassis Manufacturer	1		x	
Wheels - Unfinshed (Factory Color)	1		x	
Tire Pressure Monitoring System - Valve Stem Indicators	6		x	
Rear Mud Flaps	2		x	
Fluid Identifcation Plate	1		x	
Fuel Type Label - Diesel	1		x	
Seating Label - Maximum Seating Of 2	1		x	
Vehicle Height Label	1		x	
Seatbelt Warning Label	1		x	
Riding On Step Warning Label - Rear of Body	1		x	
Helmet In Cab Warning Label	1		x	
NFPA Helmet Storage - Department To Store In Body	1		x	
BODY - 116"	1			
Body Construction - Combination Formed Sheet / Extruded	1		x	
Body Subframe - Aluminum Extruded	1		x	
Body Floor Material - 190" 3003 Aluminum Treadplate	1		x	
Bulkhead and Apron - .125" 3003 Smooth Aluminum				
Body Mounting	1		x	
Polymer Isolation Strips - Chassis Frame	1		x	
Corrosion Protection Pkg - Anti Corrosion Compound and Nylon Spacers on All Fasteners				
Construction - Aluminum	1		x	
Body Dimensions - 116" Long x 50" High, 96" Wide	1		x	
Compartment Type - Add On Configuration	1		x	
Compartment Interiors - Unfinished Aluminum	1		x	
Compartment Floors - Lower With Drain Holes	1		x	
Rear Drop For ICC Underide - Steel	1		x	
Rear Apron - Aluminum Treadplate (Contoured)	1		x	
Fuel Fill, Drivers Side Rear Under Body (Aft) - Factory Plastic	1		x	
DEF Fill, Drivers Side Rear Under Body (Fore) - Factory Plastic	1		x	
COMPARTMENTATION				
Side & Cross Box With Open Rear Cargo Area	1		x	
Cross Compartment - Transverse	1		x	
L1 / R1 Transverse Compartment Dimensions - 16" Wide x 24" High x Transverse	1		x	

SUMMIT
Fire Apparatus and Custom Fabricators

DESCRIPTION	QTY	PRICE	STD. OPT	INCLUDED OPT.
SUMMIT 116" x 96" PLATFORM BRUSH UNIT		$123,084.00		
L2 Compartment Dimensions - 96" Wide x 24" High x 23" Deep, Divided Compartment (2 Doors)	1		x	
R2 Compartment Dimensions - 96" Wide x 24" High x 23" Deep, Divided Compartment (2 Doors)	1		x	
R2 Adjustable Shelf Hard ware - P100 Aluminum Unistrut	2			x
Rear Cargo Area Dimensions - 50" Wide x 96" Deep	1		x	
Compartment Doors - Swing Down Shoe Box Style Doors	6		x	
Door Finish - Treadplate Aluminum	1		x	
Door Seal - Parameter Closed Cell Rubber	1		x	
Rain Gutter - Integral To Box Jamb	1		x	
Door Locks - Delete	1		x	
BODY UPFIT				
Grab Rails - Two (2) One Each Side Of Rear Compartments	1		x	
Folding Steps - Rear Apron Mount	2		x	
SKID UNIT:				
Skid Unit Type - Full Poly	x			
Tank Size - 200 Gallon	x			
Tank Type - Poly	x			
NFPA Approved Baffling	x			
Fill Tower - Std	x			
Engine - 11 HP Briggs & Stratton Gasoline Powered	x			
Start - Manual	x			
Pump - 240 Max PS1, 110 GPM @ 50PSI	x			
Primer - Exhaust	x			
Painted Steel Manifold	x			
Valves - 1/4 Turn Industrial	x			
Discharges - 2 x 1", 2 x 1.5"	x			
1.5" Preconnect Hose Trough	x			
Hannay Hose Reel - 100' of 1" Electric Rewind	x			
100' Of Red Booster Hose	x			
Foam System - Delete	x			
12 VOLT ELECTRICAL REQUIRMENTS				
12 Volt Elctrical System - Non Multiplex System	1		x	
Wiring Requirments - NFPA 1901	1		x	
SAE Practices & FMVSS Compliant	1		x	
Wiring - GXL Stranded Copper	1		x	
12V Dc Voltage Output Testing & Documentation	1		x	
Switch Panel - Ford Auxiliary Switches - One Master Switch Warning System	1		x	
Reserve Capacity Test:	1		x	

11 Sperti Drive, Edgewood, KY 41017
(859)331-0360
FAX: (859)331-0399

SUMMIT
Fire Apparatus and Custom Fabricators

DESCRIPTION	QTY	PRICE	STD. OPT	INCLUDED OPT.
SUMMIT 116" x 96" PLATFORM BRUSH UNIT		$123,084.00		
Alternator Performance Test At Idle:	1		x	
Alternator Performance Test At Full Load:	1		x	
Low Voltage Alarm Test:	1		x	
Documentation - NFPA Test Results	1		x	
Battery Disconnect Switch - Solenoid Activated From Ignition Switch	1		x	
Battery Light - Green L.E.D. Dash Mounted	1		x	
Clearance / Marker Lights - Tecniq P2 L.E.D	6		x	
License Plate Bracket and Light - Arrow	1		x	
Brake Lights, - Tecniq T40 Red L.E.D.	2		x	
Turn Lights - Tecniq T41 Amber L.E.D.	2		x	
Backup Lights - Tecniq T40 Clear L.E.D.	2		x	
Engine Compartment Light - Grote 61491-5 Switched	1		x	
Ground Area Lighting 2 Door Cab - Tecniq L.E.D	2		x	
Ground Area Lighting Body - Tecniq L.E.D	2		x	
Rear Cargo Area Light - TecNiq	1		x	
Compartment Lighting - TecNiq L.E.D Single Dome	6		x	
Compartment Ajar Light - Weldon LED	1		x	
Low Voltage Alarm	1		x	
Battery Charging Receptacle -	1		x	
Light Bar - Whelen 55" Freedom L.E.D.	1		x	
Blocking Right Away	1		x	
Lower Zone A Warning Lights - Whelen M2 Series L.E.D.	4		x	
Lower Zone A Warning Light Chrome Flange - Whelen M2FC flange	4		x	
Lower Zone B&D Intersection Lights - Whelen M2 Series L.E.D	2		x	
Lower Zone B&D Intersection Light Chrome Flange - Whelen M2FC flange	2		x	
Lower Zone B&D Rear Warning Lights - Whelen 600 Series	2		x	
Lower Zone B&D Rear Warning Light Chrome Flange - Whelen 6Eflange	2		x	
Lower Zone C Warning Lights - Whelen 600 Series	2		x	
Upper Zone B & D Warning Lights - Whelen 600 Series	2		x	
Upper Zone B & D Warning Light Chrome Flange - Whelen 6Eflange	2		x	
Upper Zone C Warning Lights - Whelen 600 Series	2		x	
Upper Zone C Warning Light Chrome Flange - Whelen 6Eflange	2		x	
Electronic Siren - Whelen 295SLSA1	1		x	
Siren Speaker - Code 3 PB100B	1		x	
PAINTING AND STRIPING				
Undercoating - Delete	1		x	
PPG Two Stage Urthane - Body Job Color	1		x	

SUMMIT
Fire Apparatus and Custom Fabricators

DESCRIPTION	QTY	PRICE	STD. OPT	INCLUDED OPT.
SUMMIT 116" x 96" PLATFORM BRUSH UNIT		$123,084.00		
NFPA Perimeter - 4" White Reflective Cab	1		x	
NFPA Perimeter - 4" White Reflective Body	1		x	
NFPA Chevron 6' Red/Amber Reflective - Body Only (No Rear Door)	1		x	
WARRANTIES				
Limited Warranty (1-Year)	1		x	
Paint Warranty (7-Year)	1		x	
Electrical Warranty (5-Year)	1		x	
Body Structural Warranty (10-Year)	1		x	
112 " PLATFORM BRUSH UNIT OPTIONS LIST:				
POPULAR CHASSIS OPTIONS: FORD				
Super Cab (Extend Cab) In Lieu Of The 2 Door Cab.		$2,000.00		
Crew Cab (Extend Cab) In Lieu Of The 2 Door Cab.		$3,000.00		
F450, 15,000 GVWR in Lieu Of The F550, 18,000 GVWR		-$1,000.00		
Limited Slip Rear Axle		$360.00		
MAX-Trac All Terrain Tires		$245.00		
PTO Provision		$280.00		
Ambulance Prep Package		$1,135.00		
Electronic Shift on the Fly		$215.00		
Electronic Brake Controller		$285.00		
Payload Upgrade Package - 19,500 lb. GVWR F550 Only		$1,155.00		
Power Equipment Group -Reg. Cab		$895.00		
Power Equipment Group - Crew Cab		$1,105.00		
XL Value Group		$225.00		
NFPA 2601 Upfit VDR & Seat Belt Monitoring System		$2,965.00		
Delete 4 wheel drive option		-$2,500.00		
F554 OPTIONS:				
20" x 10" Aluminum powder coated black wheels		$4,320.00		
Polished Wheel		$450.00		
Run Flat & Bead Lock system		$1,400.00		
Twin Caliper Front Brake Assembly		$1,700.00		
CHASSIS ACCESSORIES:				
NFPA Complaint Full Punch Raised treadplate running boards In Lieu of Base Step		$425.00		
Center Console for radio & siren - Treadplate Aluminum (No Storage)		$775.00		

SUMMIT
Fire Apparatus and Custom Fabricators

DESCRIPTION	QTY	PRICE	STD. OPT	INCLUDED OPT.
SUMMIT 116" x 96" PLATFORM BRUSH UNIT		$123,084.00		
Center Consolefor radio & siren - Smooth Aluminum (No Storage)		$720.00		
Book / Binder Misc Storage for console		$400.00		
Rubberized coating for console		$260.00		
Switch Panel in console in lieu of Ford Auxiliary		$210.00		
Raised or Angled switch panel on console		$115.00		
Trailer Hitch - 2" Class 4 receiver (includes 4 way plug)		$990.00		
Seven way trailer plug in lieu of 4 way		$70.00		
Warn Powder Coat Steel Front Winch Mount / Brush Guard w/ receiver		$1,730.00		
Powder Coat Steel Front Head Light Guards		$380.00		
Warn Stainless Steel Front Winch Mount / Brush Guard w/ receiver		$2,280.00		
Stainless Steel Front Head Light Guards		$450.00		
Heavy Duty Hammer tone winch ready Bumper with driving light cut outs		$1,900.00		
Heavy Duty Hammer tone 1/4" plate Grille and brush guards		$560.00		
Heavy Duty Polished Stainless Steel Grille and Brush Guards		$1,187.00		
Portable 9500 lb Winch with wireless remote		$1,235.00		
Fixed Warn 12,000 lb Winch with wireless remote		$1,305.00		
Fixed Warn 15,000 lb Winch with wireless remote		$1,600.00		
Stainless Steel Wheel Simulators		$605.00		
BODY OPTIONS:				
112" Body In Lieu Of 116" Body - L2 & R2 Compartments To Be 92" Wide Plus Custom Aluminum Skid Required		$1,375.00		
Lowered Transverse Compartment For Crosslay Install - 16" Wx 18" H x Transverse		(50.00)		
Right Side Compartment 72" Wide In Lieu Of 96" Wide		(75.00)		
STORAGE OPTIONS:				
Adjustable Shelf (23" Deep)		$200.00		
Hard Suction Storage Troughs On Left Side Compartment		780.00		
PUMP OPTIONS				
200 Gallon Poly Tank & Skid, 13 HP Gasoline Engine Pump, Painted Steel Pipe Manifold, 1/4 Industrial Valves, 1.5" Mattydale, Hannay Booster Reel W/100' of 1", 1.5" Rear Discharge Installed		$11,200.00		
18 HP Gasoline Engine Pump In Lieu Of 11 Hp		2,890.00		
250 Gallons Of Water In lieu Of 200		$200.00		
300 Gallons Of Water In Lieu Of 200		$350.00		
400 Gallons Of Water In Lieu Of 200		$1,040.00		
Custom Aluminum Skid with Under In Lieu Of Poly		$1,275.00		

SUMMIT
Fire Apparatus and Custom Fabricators

DESCRIPTION	QTY	PRICE	STD. OPT	INCLUDED OPT.
SUMMIT 116" x 96" PLATFORM BRUSH UNIT		$123,084.00		
Under Skid Storage - Aluminum Skid		$450.00		
Stainless Steel Manifold And Akron Valves		$1,100.00		
Around The Pump Foam System and 20 Gallon Foam Cell		$1,375.00		
Electric Power From Chassis In Lieu Of Battery		$400.00		
Crosslays Above Transverse Compartment InLieu of 1.5" Hose Trough		$2,600.00		
12 VOLT ELECTRICAL OPTIONS				
Kussmaul Battery Conditioner with Auto Eject inlieu of plug		$1,130.00		
Driving Lights in HD bumper option		$450.00		
LED Strip lighting in lieu of single LED compartment light		$1,300.00		
Additional LED Light on Cargo Area Bulkhead		$125.00		
Additional LED Strip Light in Transverse Compartment		$170.00		
LED Ground lights under front of body		$275.00		
LED Ground light under front bumper		$205.00		
LED Browlight on front of cab		$1,550.00		
Whelen TAM85 46" Traffic Advisor - On Bulk Head		$1,530.00		
12 Volt FRC Evolution LED FCA530-V08 Push Up Lights - Two (2) Mounted on Body		$2,594.00		
PAINT:				
Two Tone Chassis - Two Door		$2,810.00		
Two Tone Chassis - Four Door		$3,210.00		
Painting Jambs and under hood in addition to paint (2 Door)		$600.00		
Painting Jambs and under hood in addition to paint (4 Door)		$1,200.00		
Two Tone Body		$2,550.00		
Painted Steel Wheels to Job Color		$460.00		
Body Undercoating		$375.00		
STRIPING & LETTERING:				
NFPA Perimeter Stripe 4"		$730.00		
1- 4 -1 NFPA Perimeter Stripe 4" with 1" stripe above and below		$900.00		
Z pattern in stripe		$150.00		
Sixty 3" Reflective Lettering		$575.00		

11 Sperti Drive, Edgewood, KY 41017
(859)331-0360
FAX: (859)331-0399

Fire Apparatus and Custom Fabricators

DESCRIPTION	QTY	PRICE	STD. OPT	INCLUDED OPT.
SUMMIT 116" x 96" PLATFORM BRUSH UNIT		$123,084.00		

11 Sperti Drive, Edgewood, KY 41017
(859)331-0360
FAX: (859)331-0399

SUMMIT

Fire Apparatus and Custom Fabricators

CUSTOM DESIGN IS OUR SPECIALTY, QUALITY IS OUR COMMITMENT!

11 Sperti Drive Edgewood, KY 41017 (859) 331-0360 www.SummitFireApparatus.com

Fire Apparatus and Custom Fabricators

DESCRIPTION	QTY	PRICE	STD. OPT	INCLUDED OPT.
SUMMIT 116" x 86" PLATFORM BRUSH UNIT		86,500.00		
CHASSIS - 2 DOOR	1			
2014 Ford F-350 Chassis XL				
4X4 SD REGULAR CAB 141" WB SRW XL				
POWERTRAIN:				
Powerstroke 6.7L V-8 Ohv Direct Diesel Injection 32 Valve Intercooled Turbo Diesel Engine				
357 Amp Dual Alternator				
750 Amp (Total) 78 Amp Hours (Ah) (Total) Battery Dual Batteries With Run Down Protection				
Engine Block Heater				
6-Speed Electronic Selectshift Automatic Transmission With Overdrive, Lock-Up, Driver Selection				
Part-Time Four-Wheel Drive With Electronic Transfer Case Shift				
Auto Locking Hubs				
Driveline Traction Control				
Limited Slip W/4.88 Axle Ratio				
Stainless Steel Exhaust				
Hydraulic Power-Assist Re-Circulating Ball Steering				
4-Wheel Disc Brakes With Front And Rear Vented Discs				
Firm Ride Suspension				
Mono-Beam Non-Independent Front Suspension				
Front Anti-Roll Bar				
Front Coil Springs				
Hd Front Shocks				
Rigid Rear Axle				
Rear Leaf Suspension				
Rear Anti-Roll Bar				
Hd Rear Leaf Springs				
Hd Rear Shocks				
Front And Rear 18" X 8.00" Argent Steel Wheels				
LT275/65 R18 BSW As Front And Rear Tires				
SAFETY				
4-Wheel Anti-Lock Braking System				
Dual Airbags, Seat Mounted Driver And Passenger Side-Impact Airbags, Curtain Overhead Airbags				
Front Height Adjustable Seatbelts				
COMFORT AND CONVENIENCE				
Air Conditioning, Underseat Ducts				
Am/Fm Stereo, Clock, Seek-Scan, 2 Speakers, Fixed Antenna				
2 12V Dc Power Outlets, Retained Accessory Power				
Analog Instrumentation Display Includes Tachometer, Oil Pressure Gauge, Engine Temperature Gauge, Turbo/Supercharger Boost				

SUMMIT
Fire Apparatus and Custom Fabricators

DESCRIPTION	QTY	PRICE	STD. OPT	INCLUDED OPT.
SUMMIT 116" x 86" PLATFORM BRUSH UNIT		86,500.00		
Warning Indicators Include Oil Pressure, Engine Temperature, Battery, Lights On, Key, Low Fuel, Door Ajar, Service Interval, Brake Fluid				
Steering Wheel With Tilt And Telescopic Adjustment				
Interior Lights Include Dome Light With Fade				
Glove Box, Front Cupholder, Instrument Panel Bin, Driver And Passenger Door Bins, Upfitter Switches				
SEATING AND INTERIOR				
Seating Capacity Of 3 * 40-20-40 Split-Bench Front Seat With Adjustable Head Restraints, Center Armrest With Storage				
4-Way Adjustable Driver Seat Includes Lumbar Support				
4-Way Adjustable Passenger Seat				
Vinyl Faced Front Seats With Vinyl Back Material				
Full Cloth Headliner, Full Vinyl/Rubber Floor Covering, Plastic/Rubber Gear Shift Knob, Chrome Interior Accents				
EXTERIOR FEATURES				
Side Impact Beams, Fully Galvanized Steel Body Material				
Black Fender Flares				
Black Front Windshield Molding				
Black Window Moldings				
Black Door Handles				
Black Grille				
2 Doors				
Trailer Harness				
Driver And Passenger Power Remote Black Heated Convex Spotter Folding Manual Extendable Trailer Outside Mirrors With Turn Signal Indicators				
Front Black Bumper With Front Tow Hooks				
Additional Exterior Lights Include Cab Clearance Lights, Underhood Light				
Clearcoat Monotone Paint				
EMISSIONS				
425 50 State Emissions				
DIMENSIONS AND CAPACITIES				
Output 300 Hp @ 2,800 Rpm Torque 660 Lb.-Ft. @ 1,600 Rpm				
1ST Gear Ratio 3.974 :1				
2ND Gear Ratio 2.318:1				
3RD Gear Ratio 1.516:1				
4TH Gear Ratio 1.149:1				
5TH Gear Ratio 0.858:1				
6TH Gear Ratio .0674:1				
Reverse Gear Ratio 3.128:1				
GVWR 11,100 Lbs.				

11 Sperti Drive, Edgewood, KY 41017
(859)331-0360
FAX: (859)331-0399

Fire Apparatus and Custom Fabricators

DESCRIPTION	QTY	PRICE	STD. OPT	INCLUDED OPT.
SUMMIT 116" x 86" PLATFORM BRUSH UNIT		86,500.00		
Front GAWR Weight 5,200 lbs.				
Rear GAWR Weight 6,730 lbs.				
Payload 4,175 lbs.				
Front Axle Capacity 6,000 Lbs.				
Rear Axle Capacity 6,730 Lbs.				
Front Spring Rating 5,200 Lbs.				
Rear Spring - 6,730 Lbs.				
Front Tire/Wheel Capacity 5,000 Lbs.				
Rear Tire/Wheel Capacity 6,000 Lbs.				
Towing Capacity 12,500 Lbs.				
Front Legroom 41.1 "				
Front Headroom 40.7 "				
Front Hiproom 67.6 "				
Front Shoulder Room 68.0 "				
Passenger Area Volume 65.9 Cu.Ft.				
Body Width 95.2 "				
Body Height 80.7 "				
Wheelbase 140.8 "				
Cab To Axle 60.0 "				
Axle To End Of Frame 47.6 "				
Fuel Tank 40.0 Gal.				
SELECTED OPTIONS				
47A Ambulance Prep Pkg				
41H Engine Block Heater *Std In Ak, Co, Ia, Id, Me, Mi, Mn, Mt, Nd, Nh, Ny, Sd, Vt, Wi, Wy				
531 Trailer Tow Pkg -Inc: Trailer Brake Wiring Kit				
525 Cruise Control				
98R Operator Commanded Regeneration (Ocr)				
NFPA 2601 Chassis Upfit, Includes Vdr, Seatbelts Sensors, And Red Seat Belts In Lieu Of Grey				
CHASSIS UPFIT				
NFPA Compliant Steps - 2 Door Cab Standard Step	1		x	
Grab Handles, Cab - Delete	1			x
Rear Tow Eyes - Painted Steel (Thru Body)	2		x	
Vehicle Data Recorder - Provided By Chassis Manufacturer	1		x	
Seatbelt Warning System - Provided By Chassis Manufacturer	1		x	
Wheels - Unfinshed (Factory Color)	1		x	
Tire Pressure Monitoring System - Valve Stem Indicators	6		x	
Rear Mud Flaps	2		x	
Fluid Identifcation Plate	1		x	
Fuel Type Label - Diesel	1		x	
Seating Label - Maximum Seating Of 2	1		x	

11 Sperti Drive, Edgewood, KY 41017
(859)331-0360
FAX: (859)331-0399

SUMMIT
Fire Apparatus and Custom Fabricators

DESCRIPTION	QTY	PRICE	STD. OPT	INCLUDED OPT.
SUMMIT 116" x 86" PLATFORM BRUSH UNIT		86,500.00		
Vehicle Height Label	1		x	
Seatbelt Warning Label	1		x	
Riding On Step Warning Label - Rear of Body	1		x	
Helmet In Cab Warning Label	1		x	
NFPA Helmet Storage - Department To Store In Body	1		x	
BODY - 116"	1			
Body Construction - Combination Formed Sheet / Extruded	1		x	
Body Subframe - Aluminum Extruded	1		x	
Body Floor Material - 190" 3003 Aluminum Treadplate	1		x	
Bulkhead and Apron - .125" 3003 Smooth Aluminum				
Body Mounting	1		x	
Polymer Isolation Strips - Chassis Frame	1		x	
Corrosion Protection Pkg - Anti Corrosion Compound and Nylon Spacers on All Fasteners				
Construction - Aluminum	1		x	
Body Dimensions - 116" Long x 50" High, 86" Wide	1		x	
Compartment Type - Add On Configuration	1		x	
Compartment Interiors - Unfinished Aluminum	1		x	
Compartment Floors - Lower With Drain Holes	1		x	
Rear Drop For ICC Underide - Steel	1		x	
Rear Apron - Aluminum Treadplate (Contoured)	1		x	
Fuel Fill, Drivers Side Rear Under Body (Aft) - Factory Plastic	1		x	
DEF Fill, Drivers Side Rear Under Body (Fore) - Factory Plastic	1		x	
COMPARTMENTATION				
Side & Cross Box With Open Rear Cargo Area	1		x	
Cross Compartment - Transverse	1		x	
L1 / R1 Transverse Compartment Dimensions - 16" Wide x 24" High x Transverse	1		x	
L2 Compartment Dimensions - 96" Wide x 24" High x 18" Deep, Divided Compartment (2 Doors)	1		x	
R2 Compartment Dimensions - 96" Wide x 24" High x 18" Deep, Divided Compartment (2 Doors)	1		x	
R2 Adjustable Shelf Hard ware - P100 Aluminum Unistrut	2			x
Rear Cargo Area Dimensions - 50" Wide x 96" Deep	1		x	
Compartment Doors - Swing Down Shoe Box Style Doors	6		x	
Door Finish - Treadplate Aluminum	1		x	
Door Seal - Parameter Closed Cell Rubber	1		x	
Rain Gutter - Integral To Box Jamb	1		x	
Door Locks - Delete	1		x	

SUMMIT
Fire Apparatus and Custom Fabricators

DESCRIPTION	QTY	PRICE	STD. OPT	INCLUDED OPT.
SUMMIT 116" x 86" PLATFORM BRUSH UNIT		86,500.00		
BODY UPFIT				
Grab Rails - Two (2) One Each Side Of Rear Compartments	1		x	
Folding Steps - Rear Apron Mount	2		x	
SKID UNIT:				
Skid Unit Type - Full Poly	x		x	
Tank Size - 200 Gallon	x		x	
Tank Type - Poly	x		x	
NFPA Approved Baffling	x		x	
Fill Tower - Std	x		x	
Engine - 11 HP Briggs & Stratton Gasoline Powered	x		x	
Start - Manual	x		x	
Pump - 240 Max PS1, 110 GPM @ 50PSI	x		x	
Primer - Exhaust	x		x	
Painted Steel Manifold	x		x	
Valves - 1/4 Turn Industrial	x		x	
Discharges - 2 x 1", 2 x 1.5"	x		x	
1.5" Preconnect Hose Trough	x		x	
Hannay Hose Reel - 100' of 1" Electric Rewind	x		x	
100' Of Red Booster Hose	x		x	
Foam System - Delete	x		x	
12 VOLT ELECTRICAL REQUIRMENTS				
12 Volt Elctrical System - Non Multiplex System	1		x	
Wiring Requirments - NFPA 1901	1		x	
SAE Practices & FMVSS Compliant	1		x	
Wiring - GXL Stranded Copper	1		x	
12V Dc Voltage Output Testing & Documentation	1		x	
Switch Panel - Ford Auxiliary Switches - One Master Switch Warning System	1		x	
Reserve Capacity Test:	1		x	
Alternator Performance Test At Idle:	1		x	
Alternator Performance Test At Full Load:	1		x	
Low Voltage Alarm Test:	1		x	
Documentation - NFPA Test Results	1		x	
Battery Disconnect Switch - Solenoid Activated From Ignition Switch	1		x	
Battery Light - Green L.E.D. Dash Mounted	1		x	
Clearance / Marker Lights - Tecniq P2 L.E.D	6		x	
License Plate Bracket and Light - Arrow	1		x	
Brake Lights, - Tecniq T40 Red L.E.D.	2		x	
Turn Lights - Tecniq T41 Amber L.E.D.	2		x	
Backup Lights - Tecniq T40 Clear L.E.D.	2		x	
Engine Compartment Light - Grote 61491-5 Switched	1		x	

Fire Apparatus and Custom Fabricators

DESCRIPTION	QTY	PRICE	STD. OPT	INCLUDED OPT.
SUMMIT 116" x 86" PLATFORM BRUSH UNIT		86,500.00		
Ground Area Lighting 2 Door Cab - Tecniq L.E.D	2		x	
Ground Area Lighting Body - Tecniq L.E.D	2		x	
Rear Cargo Area Light - TecNiq	1		x	
Compartment Lighting - TecNiq L.E.D Single Dome	6		x	
Compartment Ajar Light - Weldon LED	1		x	
Low Voltage Alarm	1		x	
Battery Charging Receptacle -	1		x	
Light Bar - Whelen 55" Freedom L.E.D.	1		x	
Blocking Right Away	1		x	
Lower Zone A Warning Lights - Whelen M2 Series L.E.D.	4		x	
Lower Zone A Warning Light Chrome Flange - Whelen M2FC flange	4		x	
Lower Zone B&D Intersection Lights - Whelen M2 Series L.E.D	2		x	
Lower Zone B&D Intersection Light Chrome Flange - Whelen M2FC flange	2		x	
Lower Zone B&D Rear Warning Lights - Whelen 600 Series	2		x	
Lower Zone B&D Rear Warning Light Chrome Flange - Whelen 6Eflange	2		x	
Lower Zone C Warning Lights - Whelen 600 Series	2		x	
Upper Zone B & D Warning Lights - Whelen 600 Series	2		x	
Upper Zone B & D Warning Light Chrome Flange - Whelen 6Eflange	2		x	
Upper Zone C Warning Lights - Whelen 600 Series	2		x	
Upper Zone C Warning Light Chrome Flange - Whelen 6Eflange	2		x	
Electronic Siren - Whelen 295SLSA1	1		x	
Siren Speaker - Code 3 PB100B	1		x	
PAINTING AND STRIPING				
Undercoating - Delete	1		x	
PPG Two Stage Urthane - Body Job Color	1		x	
NFPA Perimeter - 4" White Reflective Cab	1		x	
NFPA Perimeter - 4" White Reflective Body	1		x	
NFPA Chevron 6' Red/Amber Reflective - Body Only (No Rear Door)	1		x	
WARRANTIES				
Limited Warranty (1-Year)	1		x	
Paint Warranty (7-Year)	1		x	
Electrical Warranty (5-Year)	1		x	
Body Structural Warranty (10-Year)	1		x	
112 " PLATFORM BRUSH UNIT OPTIONS LIST:				

11 Sperti Drive, Edgewood, KY 41017
(859)331-0360
FAX: (859)331-0399

SUMMIT
Fire Apparatus and Custom Fabricators

DESCRIPTION	QTY	PRICE	STD. OPT	INCLUDED OPT.
SUMMIT 116" x 86" PLATFORM BRUSH UNIT		86,500.00		
POPULAR CHASSIS OPTIONS: FORD				
Super Cab (Extend Cab) In Lieu Of The 2 Door Cab.		2,000.00		
Crew Cab (Extend Cab) In Lieu Of The 2 Door Cab.		3,000.00		
Limited Slip Rear Axle		360.00		
MAX-Trac All Terrain Tires		245.00		
PTO Provision		280.00		
Ambulance Prep Package		1,135.00		
Electronic Shift on the Fly		215.00		
Electronic Brake Controller		285.00		
Payload Upgrade Package - 19,500 lb. GVWR F550 Only		1,155.00		
Power Equipment Group -Reg. Cab		895.00		
Power Equipment Group - Crew Cab		1,105.00		
XL Value Group		225.00		
NFPA 2601 Upfit VDR & Seat Belt Monitoring System		2,965.00		
Delete 4 wheel drive option		(2,100.00)		
CHASSIS ACCESSORIES:				
NFPA Complaint Full Punch Raised treadplate running boards In Lieu of Base Step		425.00		
Center Console for radio & siren - Treadplate Aluminum (No Storage)		775.00		
Center Consolefor radio & siren - Smooth Aluminum (No Storage)		720.00		
Book / Binder Misc Storage for console		400.00		
Rubberized coating for console		260.00		
Switch Panel in console in lieu of Ford Auxiliary		210.00		
Raised or Angled switch panel on console		115.00		
Trailer Hitch - 2" Class 4 receiver (includes 4 way plug)		990.00		
Seven way trailer plug in lieu of 4 way		70.00		
Warn Powder Coat Steel Front Winch Mount / Brush Guard w/ receiver		1,730.00		
Powder Coat Steel Front Head Light Guards		380.00		
Warn Stainless Steel Front Winch Mount / Brush Guard w/ receiver		2,280.00		
Stainless Steel Front Head Light Guards		450.00		
Heavy Duty Hammer tone winch ready Bumper with driving light cut outs		1,900.00		
Heavy Duty Hammer tone 1/4" plate Grille and brush guards		560.00		
Heavy Duty Polished Stainless Steel Grille and Brush Guards		1,187.00		
Portable 9500 lb Winch with wireless remote		1,235.00		
Fixed Warn 12,000 lb Winch with wireless remote		1,305.00		
Fixed Warn 15,000 lb Winch with wireless remote		1,600.00		

SUMMIT
Fire Apparatus and Custom Fabricators

DESCRIPTION	QTY	PRICE	STD. OPT	INCLUDED OPT.
SUMMIT 116" x 86" PLATFORM BRUSH UNIT		86,500.00		
Stainless Steel Wheel Simulators		605.00		
BODY OPTIONS:				
112" Body In Lieu Of 116" Body - L2 & R2 Compartments To Be 92" Wide Plus Custom Aluminum Skid Required		1,375.00		
Lowered Transverse Compartment For Crosslay Install - 16" Wx 18" H x Transverse				
STORAGE OPTIONS:				
Adjustable Shelf (18" Deep)		200.00		
PUMP OPTIONS				
18HP Gasoline Pump In Lieu Of 11HP Pump		2,890.00		
Plunger Style Primer In Lieu Of Exhaust		75.00		
250 Gallons Of Water In lieu Of 200		200.00		
Custom Aluminum Skid In Lieu Of Poly		1,275.00		
Under Skid Storage - Aluminum Skid		525.00		
Stainless Steel Manifold And Akron Valves		1,100.00		
Around The Pump Foam System and 20 Gallon Foam Cell		1,375.00		
Electric Power From Chassis In Lieu Of Battery		400.00		
Crosslays Above Transverse Compartment InLieu of 1.5" Hose Trough		2,600.00		
12 VOLT ELECTRICAL OPTIONS				
Kussmaul Battery Conditioner with Auto Eject inlieu of plug		1,130.00		
Driving Lights in HD bumper option		450.00		
LED Strip lighting in lieu of single LED compartment light		1,300.00		
Additional LED Light on Cargo Area Bulkhead		125.00		
Additional LED Strip Light in Transverse Compartment		170.00		
LED Ground lights under front of body		275.00		
LED Ground light under front bumper		205.00		
LED Browlight on front of cab		1,550.00		
Whelen TAM85 46" Traffic Advisor - Requires Rear Compartment Enclosure		1,530.00		
12 Volt Whelen Pioneer 3000 Push Up Lights - Two (2) Mounted on Body		2,720.00		
12 Volt FRC Evolution LED FCA530-V08 Push Up Lights - Two (2) Mounted on Body		2,594.00		
PAINT:				
Two Tone Chassis - Two Door		2,810.00		
Two Tone Chassis - Four Door		3,210.00		

Fire Apparatus and Custom Fabricators

DESCRIPTION	QTY	PRICE	STD. OPT	INCLUDED OPT.
SUMMIT 116" x 86" PLATFORM BRUSH UNIT		86,500.00		
Painting Jambs and under hood in addition to paint (2 Door)		600.00		
Painting Jambs and under hood in addition to paint (4 Door)		1,200.00		
Two Tone Body		2,550.00		
Painted Steel Wheels to Job Color		460.00		
Body Undercoating		375.00		
STRIPING & LETTERING:				
NFPA Perimeter Stripe 4"		730.00		
1- 4 -1 NFPA Perimeter Stripe 4" with 1" stripe above and below		900.00		
Z pattern in stripe		150.00		
Sixty 3" Reflective Lettering		575.00		

11 Sperti Drive, Edgewood, KY 41017
(859)331-0360
FAX: (859)331-0399

SUMMIT

Fire Apparatus and Custom Fabricators

CUSTOM DESIGN IS OUR SPECIALTY, QUALITY IS OUR COMMITMENT!

11 Sperti Drive Edgewood, KY 41017 (859) 331-0360 www.SummitFireApparatus.com

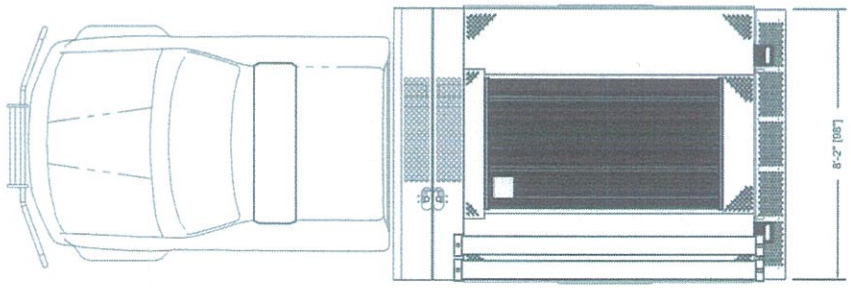

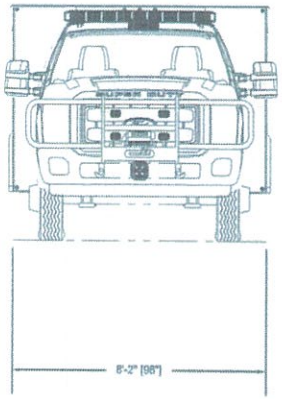

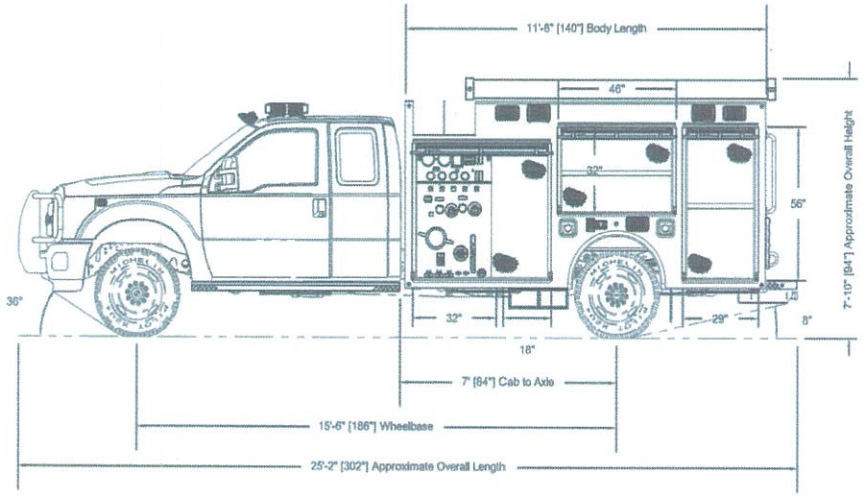

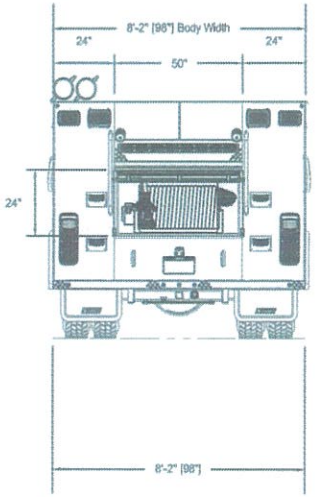

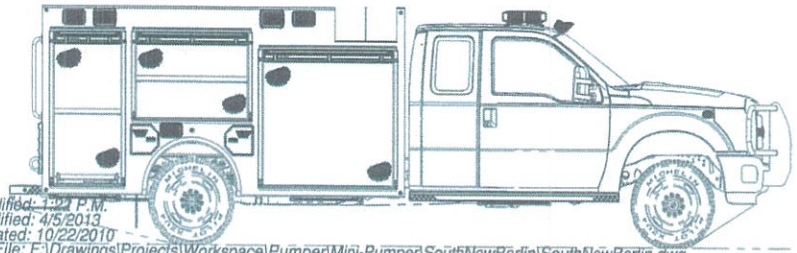

Time Modified: 1:22 P.M.
Date Modified: 4/5/2013
Date Created: 10/22/2010
Drawing File: F:\Drawings\Projects\Workspace\Pumper\Mini-Pumper\SouthNewBerlin\SouthNewBerlin.dwg
Scale: 1=48

1	SUMMIT Fire Apparatus and Custom Fabricators 11 Sperti Dr. Edgewood, Ky. 41017		
2			
3			
4			
5	SCALE: 1/4"=1'-0"	APPROVED BY:	DRAWN BY: RSC
6	DATE: 04/05/13		JOB# South
7	South New Berlin F.D.		
8			
9	Mini-Pumper Unit		DRAWING NUMBER SouthNewBerlin
REVISIONS			

Fire Apparatus and Custom Fabricators

DESCRIPTION	QTY	PRICE	STD. OPT.	INCLUDED OPT.
F550 MINI PUMPER / QUICK ATTACK		$180,600.00		
CHASSIS - SUPER CAB				
2014 Ford F-550 Chassis XL				
4X4 SD SUPER CAB 186" WB DRW XL				
POWERTRAIN:				
Powerstroke 6.7L V-8 Ohv Direct Diesel Injection 32 Valve Intercooled Turbo Diesel Engine				
357 Amp Dual Alternator				
750 Amp (Total) 78 Amp Hours (Ah) (Total) Battery Dual Batteries With Run Down Protection				
Engine Block Heater				
6-Speed Electronic Selectshift Automatic Transmission With Overdrive, Lock-Up, Driver Selection				
Part-Time Four-Wheel Drive With Electronic Transfer Case Shift				
Auto Locking Hubs				
Driveline Traction Control				
Limited Slip W/4.88 Axle Ratio				
Stainless Steel Exhaust				
Hydraulic Power-Assist Re-Circulating Ball Steering				
4-Wheel Disc Brakes With Front And Rear Vented Discs				
Firm Ride Suspension				
Mono-Beam Non-Independent Front Suspension				
Front Anti-Roll Bar				
Front Coil Springs				
Hd Front Shocks				
Rigid Rear Axle				
Rear Leaf Suspension				
Rear Anti-Roll Bar				
Hd Rear Leaf Springs				
Hd Rear Shocks				
Front And Rear 19.5" X 6.00" Argent Steel Wheels				
Lt225/70Sr19.5 Bsw As Front And Rear Tires				
SAFETY				
4-Wheel Anti-Lock Braking System				
Dual Airbags, Seat Mounted Driver And Passenger Side-Impact Airbags, Curtain Overhead Airbags				
Front Height Adjustable Seatbelts				
COMFORT AND CONVENIENCE				
Air Conditioning, Underseat Ducts				
Am/Fm Stereo, Clock, Seek-Scan, 2 Speakers, Fixed Antenna				
2 12V Dc Power Outlets, Retained Accessory Power				

11 Sperti Drive, Edgewood, KY 41017
(859)331-0360
FAX: (859)331-0399

Fire Apparatus and Custom Fabricators

DESCRIPTION	QTY	PRICE	STD. OPT.	INCLUDED OPT.
F550 MINI PUMPER / QUICK ATTACK		$180,600.00		
Analog Instrumentation Display Includes Tachometer, Oil Pressure				
Warning Indicators Include Oil Pressure, Engine Temperature, Battery, Lights On, Key, Low Fuel, Door Ajar, Service Interval, Brake Fluid				
Steering Wheel With Tilt And Telescopic Adjustment				
Interior Lights Include Dome Light With Fade				
Glove Box, Front Cupholder, Instrument Panel Bin, Driver And Passenger Door Bins, Upfitter Switches				
SEATING AND INTERIOR				
Seating Capacity Of 6 * 40-20-40 Split-Bench Front Seat With Adjustable Head Restraints, Center Armrest With Storage				
4-Way Adjustable Driver Seat Includes Lumbar Support				
4-Way Adjustable Passenger Seat				
Vinyl Faced Front Seats With Vinyl Back Material				
60-40 folding rear split-bench seat with FlexFold flip forward cushion/seatback,				
3 adjustable rear head restraints				
Full Cloth Headliner, Full Vinyl/Rubber Floor Covering, Plastic/Rubber Gear Shift Knob, Chrome Interior Accents				
EXTERIOR FEATURES				
Side Impact Beams, Fully Galvanized Steel Body Material				
Black Fender Flares				
Black Front Windshield Molding				
Black Window Moldings				
Black Door Handles				
Black Grille				
2 Doors				
Trailer Harness				
Driver And Passenger Power Remote Black Heated Convex Spotter Folding Manual Extendable Trailer Outside Mirrors With Turn Signal Indicators				
Front Black Bumper With Front Tow Hooks				
Additional Exterior Lights Include Cab Clearance Lights, Underhood Light				
Clearcoat Monotone Paint				
EMISSIONS				
425 50 State Emissions				
DIMENSIONS AND CAPACITIES				
Output 300 Hp @ 2,800 Rpm Torque 660 Lb.-Ft. @ 1,600 Rpm				
1St Gear Ratio 3.974				
2Nd Gear Ratio 2.318				

11 Sperti Drive, Edgewood, KY 41017
(859)331-0360
FAX: (859)331-0399

SUMMIT
Fire Apparatus and Custom Fabricators

DESCRIPTION	QTY	PRICE	STD. OPT.	INCLUDED OPT.
F550 MINI PUMPER / QUICK ATTACK		$180,600.00		
3Rd Gear Ratio 1.516				
4Th Gear Ratio 1.149				
5Th Gear Ratio 0.858				
6Th Gear Ratio .0674				
Reverse Gear Ratio 3.128				
Gvwr 18,000 Lbs.				
Front GAWR Weight 7,000 lbs.				
Rear GAWR Weight 13,660 lbs.				
Payload 10,995 lbs.				
Front Axle Capacity 7,000 Lbs.				
Rear Axle Capacity 13,660 Lbs.				
Front Spring Rating 7,000 Lbs.				
Rear Spring Rating 13,660 Lbs.				
Front Tire/Wheel Capacity 7,500 Lbs.				
Rear Tire/Wheel Capacity 15,000 Lbs.				
Towing Capacity 16,000 Lbs.				
5Th-Wheel Towing Capacity 17,100 Lbs.				
Front Legroom 41.1 "				
Front Headroom 40.7 "				
Front Hiproom 67.6 "				
Front Shoulder Room 68.0 "				
Passenger Area Volume 65.9 Cu.Ft.				
Rear Legroom 31.6 "				
Rear Headroom 38.1 "				
Rear Hiproom 67.6 "				
Rear Shoulder Room 68.1 "				
Body Width 95.2 "				
Body Height 80.7 "				
Wheelbase 185.8 "				
Cab To Axle 84.0 "				
Axle To End Of Frame 47.6 "				
Front Tread 74.8 " Rear Tread 74.0 "				
Fuel Tank 40.0 Gal.				
SELECTED OPTIONS				
47A Ambulance Prep Pkg				
41H Engine Block Heater *Std In Ak, Co, Ia, Id, Me, Mi, Mn, Mt, Nd, Nh, Ny, Sd, Vt, Wi, Wy				
62R Transmission Pwr Take-Off Provision				
68M Payload Upgrade Pkg -Inc: Upgraded Frame, Upgraded Rear Axle, Upgraded Springs, Low Deflection/High Capacity, Increased Gvwr To 19,5000				

11 Sperti Drive, Edgewood, KY 41017
(859)331-0360
FAX: (859)331-0399

Fire Apparatus and Custom Fabricators

DESCRIPTION	QTY	PRICE	STD. OPT.	INCLUDED OPT.
F550 MINI PUMPER / QUICK ATTACK		$180,600.00		
531 Trailer Tow Pkg -Inc: Trailer Brake Wiring Kit				
525 Cruise Control				
Tgb Tires: 225/70Rx19.5G Bsw Max Traction				
98R Operator Commanded Regeneration (Ocr)				
NFPA 2601 Chassis Upfit, Includes Vdr, Seatbelts Sensors, And Red Seat Belts In Lieu Of Grey				
CHASSIS UPFIT				
NFPA Compliant Steps - 2 Door Cab Standard Step	2		x	
Grab Handles, Cab - Delete	1			x
Rear Tow Eyes - Painted Steel (Thru Body)	2		x	
Vehicle Data Recorder - Provided By Chassis Manufacturer	1		x	
Seatbelt Warning System - Provided By Chassis Manufacturer	1		x	
Wheels - Unfinished (Factory Color)	1		x	
Wheel Trim - Delete	1		x	
Tire Pressure Monitoring System - Valve Stem Indicators	6		x	
Rear Mud Flaps	2		x	
Fluid Identifcation Plate	1		x	
Fuel Type Label - Diesel	1		x	
Seating Label - Maximum Seating Of 2	1		x	
Vehicle Height Label	1		x	
Seatbelt Warning Label	1		x	
Riding On Step Warning Label - Rear of Body	1		x	
Helmet In Cab Warning Label	1		x	
NFPA Helmet Storage - Department To Store In Body	1		x	
BODY - MINI Pumper				
Body Construction - Combination Formed Sheet / Extruded	1		x	
Body Subframe - Aluminum Extruded	1		x	
Material - 190" and .160" 5052 Aluminum	1		x	
Body Mounting	1		x	
Polymer Isolation Strips - Chassis Frame	2		x	
Construction - All Aluminum	1		x	
Body Dimensions - 140" Long, 66" High, 96" Wide	1		x	
Compartment Interiors - Unfinished Aluminum	1		x	
Compartment Floors - Raised Sweep-out Type	1		x	
Rear Drop For Tailboard - Steel	1		x	
Rear Tail Board - 8 inch NFPA Aluminum Treadplate	1		x	
Fenderettes - Delete	1		x	
Wheel Well Liners - Delete	1		x	

SUMMIT
Fire Apparatus and Custom Fabricators

DESCRIPTION	QTY	PRICE	STD. OPT.	INCLUDED OPT.
F550 MINI PUMPER / QUICK ATTACK		$180,600.00		
Corrosion Protection Pkg - Anti Corrosion Compound and Nylon Spacers on All Fasteners	1		x	
Hose Bed - Aluminum Perforated Aluminum Sheet	1		x	
Hose Bed Step - Integrated Body Step To Access Hose Bed Floor	1		x	
COMPARTMENTATION				
7-Bay With Rear Compartment Partially Transverse	1		x	
L1 Compartment Dimensions - 50" Wide x 50" High Divided Compartment (12" deep at pump panel, 22" Deep after Divider)	1		x	
L1 Adjustable Shelf Hard ware - P100 Aluminum Unistrut	2			x
L2 Compartment Dimensions - 46" Wide x 32" High x 23" Deep	1		x	
L2 Adjustable Shelf Hard ware - P100 Aluminum Unistrut	2			x
L3 Compartment Dimensions - 29" Wide x 56" High x 23" Deep	1		x	
L3 Adjustable Shelf Hard ware - P100 Aluminum Unistrut	2			x
R1 Compartment Dimensions - 50" Wide x 50" High x 23" Deep	1		x	
R1 Adjustable Shelf Hard ware - P100 Aluminum Unistrut	2			x
R2 Compartment Dimensions - 46" Wide x 32" High x 23" Deep	1		x	
R2 Adjustable Shelf Hard ware - P100 Aluminum Unistrut	2			x
R3 Compartment Dimensions - 29" Wide x 56" High x 23" Deep	1			
R3 Adjustable Shelf Hard ware - P100 Aluminum Unistrut	2			
Rear Compartment Dimensions - 50" Wide x 24" High x 19" Deep	1		x	
Adjustable Shelf Hardware, Rear Compartment- Delete	1		x	
Compartment Doors - Hansen Roll Up Doors	7		x	
Door Finish - Brushed	1		x	
Top Seal - Drip Rail With Wiper	7		x	
Internal Drip Pans - Delete	1		x	
Door Locks - Delete	1		x	
BODY UPFIT				
Rear Hosebed Access Steps - Cast Aluminum Fixed - Lighted	4			x
Grab Rails - Two (2) Vertical, One Each Side Of Rear Compartment	2		x	
Grab rails - Two (2) Longitudinal, One on each side of Hose Bed	2			x
SCBA Spare Bottle Storage - Single Bottle With Cast Door Housings	2			x
Hard Suction Storage - Two (2) Formed Aluminum Hose Troughs W/ Securing Straps Mounted Above Left Side Compartments	2		x	
Ladder Storage - Formed Aluminum Ladder Storage With Securing Straps Mounted Above Right Side Compartments	1			x
Hose Bed Cover - Black Vinyl With Buckle Latches	1			x
Compartment Divider - L1 Compartment (Separating Compartment From Pump panel	1			x

Fire Apparatus and Custom Fabricators

DESCRIPTION	QTY	PRICE	STD. OPT.	INCLUDED OPT.
F550 MINI PUMPER / QUICK ATTACK		$180,600.00		
PUMP	1		x	
Pump - Hale 1000 GPM	1		x	
Gearbox - In Cab Pneumatic Shift	1		x	
Pump Shift Overide - Driverside Pump Panel	1		x	
Pump Seals - Mechanical	1		x	
Priming Pump - Oiless	1		x	
Auxillary Cooler / Heat Exchanger - Pump/Engine Circulator	1		x	
Master Drain - Drivers Side Lower Pump Panel	1		x	
Drains - Quarter Turn Valves Drivers Side Pump Panel	6		x	
Thermal Releif Valve - Delete	1		x	
Cooling Line - Delete	1		x	
Plumbing - Stainless Steel & High Pressure Hose	1		x	
Valves - Hale Stainless Steel Series Quarter Turn	1		x	
Pump Anode - Delete	1		x	x
Pump Test - Manufacturer Class A NFPA 1901	1		x	
Suction Releif - Terminate Below Pump House Away From Work Area	1			x
Steamer Inlets - 6"	1		x	
6" Gated Inlets - Delete	1		x	
MIV Contol - Delete	1		x	
MIV Contol Location - Delete	1		x	
Steamer Caps - 6" Long Handle Chrome	1		x	
Left Side Auxillary Intake - (1) 2.5" Aux Intake	1		x	
Left Side Auxillary Intake Control - Direct Control	1		x	
Left Side Auxillary Intake Termination - Chrome Plug and Chain	1		x	
Right Side Auxillary Intake - Delete	1		x	
Right Side Auxillary Intake Control - Delete	1		x	
Right Side Auxillary Intake Termination - Delete	1		x	
Pump Module - Front Body Compartment	1			x
Pump Control Panel - Side Mount Control	1		x	
Dunnage Storage Area - Delete	2		x	
Pump Panel Construction - Stainless Steel	1		x	
Valve Controls - Push / Pull Locking	8		x	
Pressure Gauges - 2.5" Class One Line Gauges	7		x	
Master Gauges - 3.5"	2		x	
Pressure Governor - FRC Pump Boss	1		x	
Auxiliary Pump Hour Meter - Delete	1		x	
Water Level Gauge - Class One 1 ITL	1		x	
U.L. Test Ports	1		x	
Data Plate - Driver Side Pump Panel	1		x	

Fire Apparatus and Custom Fabricators

DESCRIPTION	QTY	PRICE	STD. OPT.	INCLUDED OPT.
F550 MINI PUMPER / QUICK ATTACK		$180,600.00		
Labels - All Intakes, Discharges, Drains & Gauges NFPA Labeled & Color Coded	1		x	
Tank To Pump Valve - 3" 1/4 Turn Ball Valve	1		x	
Tank Fill Valve - 1.5" 1/4 Turn Ball Valve	1		x	
Left Side Discharges - Two (2) 2.5"	2		x	
Left Side Discharge Control - Push / Pull Locking	2		x	
Left Side Discharge Termination - 2.5" Chrome Cap With Chain	2		x	
Right Side Forward Discharge - Delete	1		x	
Right Side Forward Discharge Control - Delete	1		x	
Right Side Forward Discharge Termination - Delete	1		x	
Right Side Rearward Discharge - Delete	1		x	
Right Side Rearward Discharge Control - Delete	1		x	
Right Side Rearward Discharge Termination - Delete	1		x	
Rear Leftside Discharges - One (1) 2.5" 1/4 Turn Ball Valve	1			x
Rear Leftside Discharge Control - Push / Pull Locking	1			x
Rear LeftSide Discharge Termination - 2.5" Chrome Cap With Chain	1			x
Rear Right Right Discharges - One (1) 2.5" 1/4 Turn Ball Valve	1		x	
Rear Right Side Discharge Control - Push / Pull Locking	1		x	
Rear Right Side Discharge Termination - 2.5" Chrome Cap With Chain	1		x	
Deluge Discharge - Delete	1		x	
Deluge Contol - Delete	1		x	
Deluge Monitor - Delete	1		x	
Crosslays- (2) 1.75" - Above Pump Compartment	2		x	
Crosslay Controls - Push / Pull Locking	2		x	
Crosslay Hose Security - Nylon Web With Velcro Fastening Left & Right Side	2		x	
Pump Compartment Light - (1) TecNiq LED On Top (In Adddition To Door Lights)	1		x	
Foam System - Delete	1		x	
Foam Discharges - N/A	6		x	
Foam Control - Delete	1		x	
Foam Flush Control - Delete	1		x	
Foam Strainer Clean Out - Delete	1		x	
TANK				
Booster Tank - UPF Poly 300	1		x	
ISO Certification - 9001:2008	1		x	
Construction - Pt3 Polypropylene	1		x	
Longitudinal and Transverse Swash Partitions	1		x	
Fill Tower W/Cover - Center Mount	1		x	
Vent Overflow - 4 Inch	1		x	

Fire Apparatus and Custom Fabricators

DESCRIPTION	QTY	PRICE	STD. OPT.	INCLUDED OPT.
F550 MINI PUMPER / QUICK ATTACK		$180,600.00		
Sump	1		x	
3" Npt Threaded Outlet Bottom Of Sump	1		x	
12 VOLT ELECTRICAL REQUIRMENTS				
12 Volt Elctrical System - Multiplex System	1		x	
Wiring Requirments - NFPA 1901	1		x	
SAE Practices & FMVSS Compliant	1		x	
Wiring - GXL Stranded Copper	1		x	
12V Dc Voltage Output Testing & Documentation	1		x	
Switch Panel - Ford Auxiliary Switches - One Master Switch Warning System	1		x	
Reserve Capacity Test:	1		x	
Alternator Performance Test At Idle:	1		x	
Alternator Performance Test At Full Load:	1		x	
Low Voltage Alarm Test:	1		x	
Documentation - NFPA Test Results	1		x	
Battery Disconnect Switch - Solenoid Activated From Ignition Switch	1		x	
Battery Light - Green L.E.D. Dash Mounted	1		x	
Clearance / Marker Lights - Tecniq P2 L.E.D	22		x	
License Plate Bracket and Light - Arrow	1		x	
Brake Lights, - Tecniq K60 Red L.E.D.	2		x	
Turn Lights - Tecniq K60 Amber L.E.D.	2		x	
Backup Lights - Tecniq K60 Clear L.E.D.	2		x	
Light Cluster Housing - Chrome	2		x	
Engine Compartment Light - Grote 61491-5 Switched	1		x	
Ground Area Lighting 2 Door Cab - Tecniq L.E.D	2		x	
Ground Area Lighting Body - Tecniq L.E.D	2		x	
Rear Cargo Area Light - TecNiq	1		x	
Compartment Lighting - TecNiq L.E.D Single Dome	7		x	
Compartment Ajar Light - Weldon LED	1		x	
Low Voltage Alarm	1		x	
Battery Conditioner - Delete	1		x	
Battery Charging Receptacle - Polarity Plug For House Charger	1		x	
Light Bar - Whelen 55" Freedom L.E.D.	1		x	
Blocking Right Away	1		x	
Lower Zone A Warning Lights - Whelen M2 Series L.E.D.	4		x	
Lower Zone A Warning Light Chrome Flange - Whelen M2FC flange	4		x	
Lower Zone B&D Intersection Lights - Whelen M2 Series L.E.D	2		x	
Lower Zone B&D Intersection Light Chrome Flange - Whelen M2FC flange	2		x	
Lower Zone B&D Rear Warning Lights - Whelen 600 L.E.D Series	2		x	

Fire Apparatus and Custom Fabricators

DESCRIPTION	QTY	PRICE	STD. OPT.	INCLUDED OPT.
F550 MINI PUMPER / QUICK ATTACK		$180,600.00		
Lower Zone B&D Rear Warning Light Chrome Flange - Whelen 6Eflange	2		x	
Lower Zone C Warning Lights - Whelen 600 L.E.D. Series	2		x	
Upper Zone B & D Warning Lights - Whelen 600 L.E.D.Series	2		x	
Upper Zone B & D Warning Light Chrome Flange - Whelen 6Eflange	2		x	
Upper Zone C Warning Lights - Whelen 600 L.E.D Series	2		x	
Upper Zone C Warning Light Chrome Flange - Whelen 6Eflange	2		x	
Electronic Siren - Whelen 295SLSA1	1		x	
Siren Speaker - Code 3 PB100B	1		x	
PAINTING AND STRIPING				
Undercoating - Delete	1		x	
PPG Two Stage Urthane - Body Job Color	1		x	
NFPA Perimeter - 4" White Reflective Cab	1		x	
NFPA Perimeter - 4" White Reflective Body	1		x	
NFPA Chevron 6' Red/Amber Reflective - Body Only (No Rear Door)	1		x	
WARRANTIES				
Limited Warranty (1-Year)	1		x	
Paint Warranty (7-Year)	1		x	
Electrical Warranty (5-Year)	1		x	
Body Structural Warranty (10-Year)	1		x	
MINI PUMPER OPTIONS LIST:				
POPULAR CHASSIS OPTIONS: FORD				
Crew Cab (Extend Cab) In Lieu Of The 2 Door Cab.		$3,000.00		
Limited Slip Rear Axle		$360.00		
MAX-Trac All Terrain Tires		$245.00		
PTO Provision		$280.00		
Electronic Shift on the Fly		$215.00		
Electronic Brake Controller		$285.00		
Power Equipment Group - Crew Cab		$1,105.00		
XL Value Group		$225.00		
Delete 4 wheel drive option		($2,500.00)		

11 Sperti Drive, Edgewood, KY 41017
(859)331-0360
FAX: (859)331-0399

SUMMIT
Fire Apparatus and Custom Fabricators

DESCRIPTION	QTY	PRICE	STD. OPT.	INCLUDED OPT.
F550 MINI PUMPER / QUICK ATTACK		$180,600.00		
PAINT:				
Repaint chassis - close door (2 door)		$3,090.00		
Repaint chassis - close door (4 door)		$3,870.00		
Painting Two -Tone (lower half F1 red upper white)		$1,900.00		
Painting Jambs and under hood in addition to paint (2 Door)		$600.00		
Painting Jambs and under hood in addition to paint (4 Door)		$1,200.00		
Painted Steel Wheels to Job Color		$460.00		
CHASSIS ACCESSORIES:				
NFPA Complaint Full Punch Raised treadplate running boards In Lieu of Base Step		$425.00		
Center Console for radio & siren - Treadplate Aluminum (No Storage)		$775.00		
Center Consolefor radio & siren - Smooth Aluminum (No Storage)		$720.00		
Book / Binder Misc Storage for console		$400.00		
Rubberized coating for console		$260.00		
Switch Panel in console in lieu of Ford Auxiliary		$210.00		
Raised or Angled switch panel on console		$115.00		
Trailer Hitch - 2" Class 4 receiver (includes 4 way plug)		$990.00		
Seven way trailer plug in lieu of 4 way		$70.00		
Warn Powder Coat Steel Front Winch Mount / Brush Guard w/ receiver		$1,730.00		
Powder Coat Steel Front Head Light Guards		$380.00		
Warn Stainless Steel Front Winch Mount / Brush Guard w/ receiver		$2,280.00		
Stainless Steel Front Head Light Guards		$450.00		
Heavy Duty Hammer tone winch ready Bumper with driving light cut outs		$1,900.00		
Heavy Duty Hammer tone 1/4" plate Grille and brush guards		$560.00		
Heavy Duty Polished Stainless Steel Grille and Brush Guards		$1,187.00		
Portable 9500 lb Winch with wireless remote		$1,235.00		
Fixed Warn 12,000 lb Winch with wireless remote		$1,305.00		
Fixed Warn 15,000 lb Winch with wireless remote		$1,600.00		
Stainless Steel Wheel Simulators		$605.00		
BODY OPTIONS:				
Enclosed Rear Cargo Area With Rear Roll Up Door		$1,800.00		
96" Deep Rear Cargo Area (Transverse Compartment 38" wide and not 53")		$200.00		
Full Depth Rear Compartment (No Transverse Front Compartments)		($275.00)		
Roll Up Rear Hose Bed Cover		$5,800.00		

11 Sperti Drive, Edgewood, KY 41017
(859)331-0360
FAX: (859)331-0399

Fire Apparatus and Custom Fabricators

DESCRIPTION	QTY	PRICE	STD. OPT.	INCLUDED OPT.
F550 MINI PUMPER / QUICK ATTACK		$180,600.00		
Increased Angle of Departure		$400.00		
ROM doors in lieu of Hansen		$560.00		
L3 & R3 Wire Covers (protect wiring)		$250.00		
Fuel Fill, Drivers Side Rear Wheel Well (Aft) - Cast Aluminum		$58.00		
DEF Fill, Drivers Side Rear Wheel Well (Fore) - Cast Aluminum		$56.00		
Aluminum Extruded RubRails		$780.00		
Polished Stainless Steel Fenderettes With full Wheel Well Liners		$985.00		
Hose Bed Divider		$490.00		
STORAGE OPTIONS:				
SCBA Spare Bottle Storage - Two (2) Passenger Side Cast Aluminum Access Doors		$560.00		
L1/R1 floor extension (extend transverse center floor out to door) each		$160.00		
Swing Door Enclosure Below Floor Extension		$230.00		
Adjustable Shelf (23" Deep)		$200.00		
Adjustable Slide Tray (23" Deep, 250lb rated)		$555.00		
Roll Out / Tilt Down Tray (23" Deep)		$725.00		
Heavy Slide Tray (600 LB Rated) - Floor Mounted		$650.00		
Heavy Slide Tray (1000 LB Rated) -Floor Mounted		$680.00		
Heavy Slide Tray For Rear Cargo Area (1000 LB Rated)		$1,580.00		
Roll Out Tool Board		$750.00		
Full Height Compartment Divider		$480.00		
PUMP OPTIONS:				
1250 GPM In Lieu Of The 1000 GPM - (Additional 2.5" Discharge)		$1,425.00		
Hose Reel - Hannay Hose Reel W/ 100' O fHose (Rear Compartment)		$3,600.00		
Foam Pro 1600 Includes Foam Cell In Tank (X-Lays Only)		$6,320.00		
Foam Pro 2001 - Single Foam System, Includes Foam Cell In Tank (X-Lays)		$7,900.00		
12 VOLT ELECTRICAL OPTIONS				
Kussmaul Battery Conditioner with Auto Eject inlieu of plug		$1,130.00		
Driving Lights in HD bumper option		$450.00		
LED Strip lighting in lieu of single LED compartment light		$1,300.00		
LED Ground lights under front of body		$275.00		
LED Ground light under front bumper		$205.00		
LED Browlight on front of cab		$1,550.00		
Whelen TAM85 46" Traffic Advisor - Requires Rear Compartment Enclosure		$1,530.00		

Fire Apparatus and Custom Fabricators

DESCRIPTION	QTY	PRICE	STD. OPT.	INCLUDED OPT.
F550 MINI PUMPER / QUICK ATTACK		$180,600.00		
12 Volt TecNiq K70 LED Clear Scene Lights - Two (2), One on Each body Side		$660.00		
12 Volt TecNiq K70 LED Clear Scene Lights - Four (4), One on Each Body Side, Two on Rear		$1,190.00		
12 Volt TecNiq K70 LEDClear Scene Lights - Six (6), Two on Each Body Side, Two on Rear		$1,480.00		
12 Volt Whelen M6 Series LED Clear Scene Lights - Two (2), One on Each Body Side		$700.00		
12 Volt Whelen M6 Series LED Clear Scene Lights - Four (4), One on Each Body Side, Two on Rear		$1,270.00		
12 Volt Whelen M6 Series LED Clear Scene Lights - Six (6), Two on Each Body Side, Two on Rear		$1,600.00		
12 Volt Whelen 600 Series LED Clear Scene Lights - Two (2), One on Each Body Side		$600.00		
12 Volt Whelen 600 Series LED Clear Scene Lights - Four (4), One on Each Body Side, Two on Rear		$1,070.00		
12 Volt Whelen 600 Series LED Clear Scene Lights - Six (6), Two on Each Body Side, Two on Rear		$1,300.00		
12 Volt Whelen 600 Series Halogen Clear Scene Lights - Two (2), One on Each Body Side		$430.00		
12 Volt Whelen 600 Series Halogen Clear Scene Lights - Four (4), One on Each Body Side, Two on Rear		$720.00		
12 Volt Whelen 600 Series Halogen Clear Scene Lights - Six (6), Two on Each Body Side, Two on Rear		$905.00		
12 Volt Whelen Pioneer 3000 Push Up Lights - Two (2) Mounted on Body		$2,720.00		
12 Volt FRC Spectra 900 LED Clear Scene Lights - Two (2), One on Each Body Side		$1,100.00		
12 Volt FRC Spectra 900 LED Clear Scene Lights - Four (4), One on Each Body Side, Two on Rear		$2,062.00		
12 Volt FRC Spectra 900 LED Clear Scene Lights - Six (6), Two on Each Body Side, Two on Rear		$2,952.00		
12 Volt FRC Evolution LED FCA530-V08 Push Up Lights - Two (2) Mounted on Body		$2,594.00		
120 / 240 VOLT ELECTRICAL:				
5000 W Gasoline Powered Honda Generator - Mounted on slide tray (Elec Start)		$4,200.00		
5000 W Gasoline Powered Generator - Mounted on slide tray (Elec Start)		$2,800.00		
3000 W Baldor Diesel Generator Mounted on slide tray (Elec Start)		$4,200.00		

SUMMIT
Fire Apparatus and Custom Fabricators

DESCRIPTION	QTY	PRICE	STD. OPT.	INCLUDED OPT.
F550 MINI PUMPER / QUICK ATTACK		$180,600.00		
5500 W Baldor Diesel Generator Mounted on slide tray (Elec Start)		$5,450.00		
120/240 Volt load center with up to 4 breakers & pigtail for genertaor		$750.00		
Fuel Tap from chassis (Diesel)		$610.00		
Compartment 120 volt 20 amp receptacle (each)		$175.00		
External 120 volt receptacle		$275.00		
Internal 120 volt compartment receptacle		$210.00		
PAINT:				
Painted Roll Up Doors In Lieu of Brushed		$1,200.00		
Body Undercoating		$375.00		
STRIPING & LETTERING:				
NFPA Perimeter Stripe 4"		$730.00		
1- 4 -1 NFPA Perimeter Stripe 4" with 1" stripe above and below		$900.00		
Z pattern in stripe		$150.00		
Sixty 3" Reflective Lettering		$575.00		

11 Sperti Drive, Edgewood, KY 41017
(859)331-0360
FAX: (859)331-0399

SUMMIT

Fire Apparatus and Custom Fabricators

CUSTOM DESIGN IS OUR SPECIALTY, QUALITY IS OUR COMMITMENT!

11 Sperti Drive Edgewood, KY 41017 (859) 331-0360 www.SummitFireApparatus.com

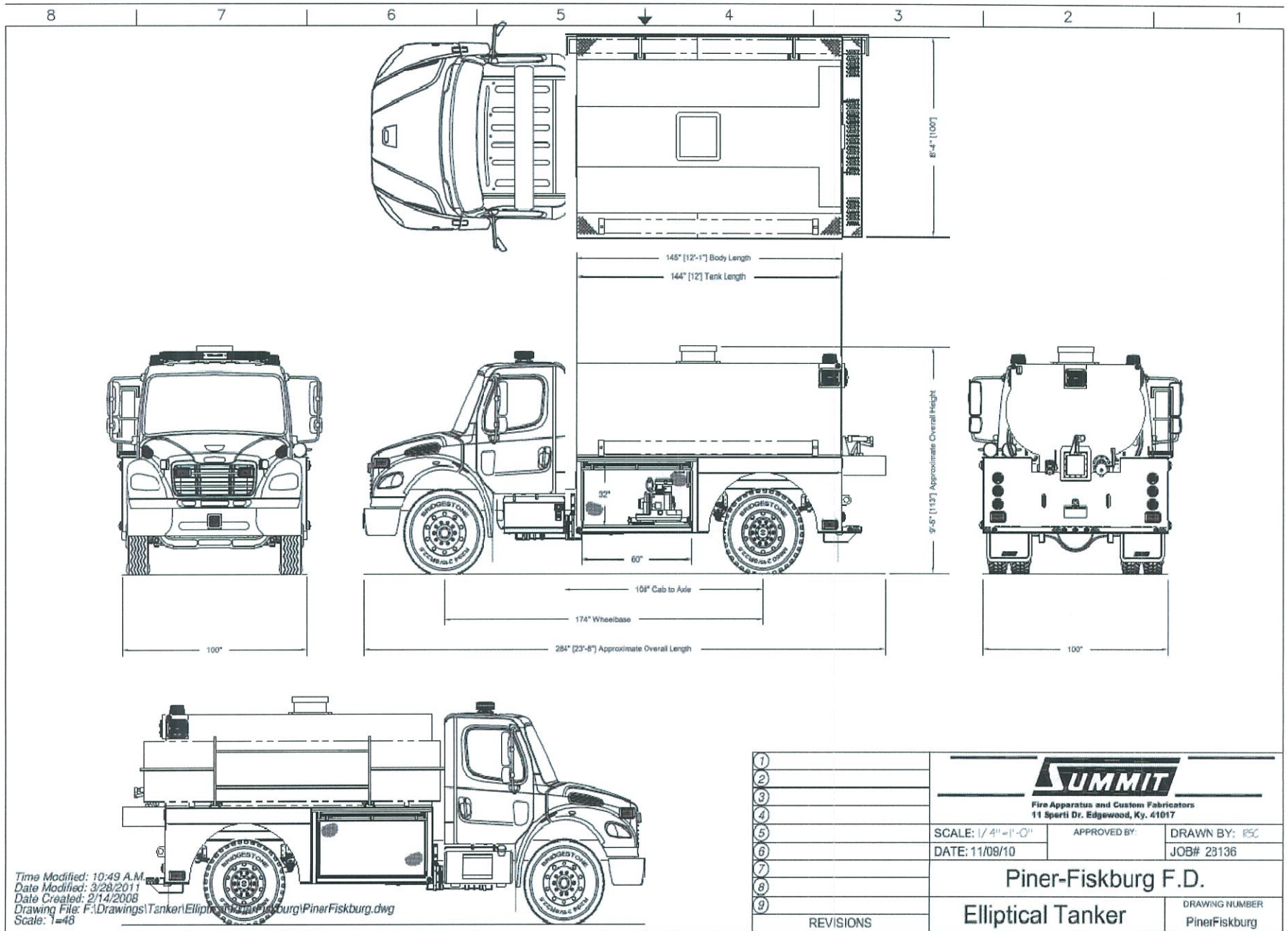

Time Modified: 10:49 A.M.
Date Modified: 3/28/2011
Date Created: 2/14/2008
Drawing File: F:\Drawings\Tanker\Elliptical\Piner Fiskburg\PinerFiskburg.dwg
Scale: 1=48

1	SUMMIT Fire Apparatus and Custom Fabricators 11 Sperti Dr. Edgewood, Ky. 41017		
2			
3			
4			
5	SCALE: 1/4" = 1'-0"	APPROVED BY:	DRAWN BY: RSC
6	DATE: 11/09/10		JOB# 23136
7	Piner-Fiskburg F.D.		
8			
9	Elliptical Tanker		DRAWING NUMBER PinerFiskburg
REVISIONS			

Fire Apparatus and Custom Fabricators

DESCRIPTION	QTY	PRICE	STD. OPT.	INCLUDED OPT.
SUMMIT ETB TANKER PROGRAM		$140,130.00		
FREIGHTLINER CHASSIS - 2 Door				
M2 106 Conventional Chassis	1		x	
2015 Model Year Specified				
Set Back Axle - Truck				
Straight Truck Provision				
LH Primary Steering Location				
Domiciled, Usa 50 States (Including California And Carb Opt-In States)				
Fire Service Vocation				
Emergency Vehicles Business Segment				
Liquid Bulk Commodity				
Terrain/Duty: 100% (All) Of The Time, In Transit, Is Spent On Paved Roads				
Maximum 8% Expected Grade				
Smooth Concrete Or Asphalt Pavement - Most Severe In-Transit (Between Sites) Road Surface				
Medium Truck Warranty				
Expected Front Axle(S) Load : 14000.0 Lbs				
Expected Rear Drive Axle(S) Load : 26000.0 Lbs				
Expected Gross Vehicle Weight Capacity : 40000.0 Lbs				
Fire Tank - No Main Driveline Driven Split-Shaft PTO/Pump				
Expected Truck Body Length : 14.0 Ft				
Expected Body/Payload Cg Height Above Frame "Xx" Inches : 32.0 In				
Cum Isl 330 Hp @ 2000 Rpm, 2200 Gov Rpm, 1000 Lb/Ft @ 1400 Rpm				
60 Mph Road Speed Limit				
Cruise Control Speed Limit Same As Road Speed Limit				
PTO Mode Engine Rpm Limit - 1100 Rpm				
PTO Rpm With Cruise Set Switch - 700 Rpm				
PTO Rpm With Cruise Resume Switch - 800 Rpm				
PTO Mode Cancel Vehicle Speed - 5 Mph				
PTO Governor Ramp Rate - 250 Rpm Per Second				
PTO Minimum Rpm - 700				
Regen Inhibit Speed Threshold - 5 Mph				
2013 Onboard Diagnostics/2010 Epa/Carb/Ghg14				
2008 Carb Emission Certification - Exempted Vehicle; No Clean Idle Label Required				
Standard Oil Pan				
Engine Mounted Oil Check And Fill				

Fire Apparatus and Custom Fabricators

DESCRIPTION	QTY	PRICE	STD. OPT.	INCLUDED OPT.
SUMMIT ETB TANKER PROGRAM		$140,130.00		
One Piece Valve Cover				
Side Of Hood Air Intake With NFPA Compliant Ember Screen And Fire Retardant Donaldson Air Cleaner				
Dr 12V 275 Amp 40-Si Brushless Pad Alternator With Remote Battery				
(2) Alliance Model 1231, Group 31, 12 Volt Maintenance Free 2250 Cca Threaded Stud Batteries				
Battery Box Frame Mounted				
Standard Battery Jumpers				
Single Battery Box Frame Mounted LH Side Under Cab				
Wire Ground Return For Battery Cables With Additional Frame Ground Return				
Non-Polished Battery Box Cover				
Positive Load Disconnect With Cab Mounted Control Switch Mounted Outboard Driver Seat				
Positive And Negative Posts For Jumpstart Located On Frame Next To Starter				
Cummins Turbocharged 18.7 Cfm Air Compressor With Internal Safety Valve				
Standard Air Compressor Governor				
Air Compressor Discharge Line				
Gvg, Fire And Emergency Service Vehicles Engine Warning				
Cummins Exhaust Brake Integral With Variable Geometry Turbo With On/Off Dash Switch				
RH Outboard Under Step Mounted Horizontal Aftertreatment System Assembly With RH Horizontal Tailpipe				
Engine Aftertreatment Device, Automatic Over The Road Regeneration And Dash Mounted Regeneration Request Switch				
Standard Exhaust System Length				
RH Standard Horizontal Tailpipe				
6 Gallon Diesel Exhaust Fluid Tank				
100 Percent Diesel Exhaust Fluid Fill				
LH Medium Duty Standard Diesel Exhaust Fluid Tank Location				
Standard Diesel Exhaust Fluid Pump Mounting				
Standard Diesel Exhaust Fluid Tank Cap				
Horton Drivemaster On/Off Fan Drive				
Automatic Fan Control With Dash Switch And Indicator Light, Non Engine Mounted				
Cummins Spin On Fuel Filter				
Combination Full Flow/Bypass Oil Filter				
1100 Square Inch Aluminum Radiator				
Antifreeze To -34F, Noat Extended Life Coolant				

Fire Apparatus and Custom Fabricators

DESCRIPTION	QTY	PRICE	STD. OPT.	INCLUDED OPT.
SUMMIT ETB TANKER PROGRAM		$140,130.00		
Gates Blue Stripe Coolant Hoses Or Equivalent				
Constant Tension Hose Clamps For Coolant Hoses				
Radiator Drain Valve				
Lower Radiator Guard				
Aluminum Flywheel Housing				
Electric Grid Air Intake Warmer				
Delco 12V 38Mt Hd Starter With Integrated Magnetic Switch				
Allison 3000 Evs Automatic Transmission With PTO Provision				
Allison Vocational Package 227 - Available On 3000/4000 Product Families With Vocational Model Evs				
Allison Vocational Rating For Fire Truck/Emergency Vehicle Applications Available With All Product Families				
Primary Mode Gears, Lowest Gear 1, Start Gear 1, Highest Gear 5, Available For 3000/4000 Product Families Only				
Secondary Mode Gears, Lowest Gear 1, Start Gear 1, Highest Gear 5, Available For 3000/4000 Product Families Only				
Vehicle Interface Wiring With Body Builder Connector Mounted Back Of Cab				
Electronic Transmission Customer Access Connector Mounted Back Of Cab				
Magnetic Plugs, Engine Drain, Transmission Drain, Axle(S) Fill And Drain				
Push Button Electronic Shift Control, Dash Mounted				
Transmission Prognostics - Enabled 2013				
Water To Oil Transmission Cooler, In Radiator End Tank				
Transmission Oil Check And Fill With Electronic Oil Level Check				
Synthetic Transmission Fluid (Tes-295 Compliant)				
Detroit Da-F-14.7-3 14,700# Ff1 71.5 Kpi/3.74 Drop Single Front Axle				
Bendix 16.5X6D Es Cast Spider Cam Front Brakes, Single Anchor, Fabricated Shoes				
Fire And Emergency Severe Service, Non-Asbestos Front Lining				
Conmet Cast Iron Front Brake Drums				
Skf Scotseal Plus Xl Front Oil Seals				
Vented Front Hub Caps With Window, Center And Side Plugs - Oil				
Standard Spindle Nuts For All Axles				
Bendix Versajust Automatic Front Slack Adjusters				
Trw Tas-85 Power Steering				
Power Steering Pump				
2 Quart See Through Power Steering Reservoir				
Organic Sae 80/90 Front Axle Lube				

Fire Apparatus and Custom Fabricators

DESCRIPTION	QTY	PRICE	STD. OPT.	INCLUDED OPT.
SUMMIT ETB TANKER PROGRAM		$140,130.00		
14,600# Taperleaf Front Suspension				
Maintenance Free Rubber Bushings - Front Suspension				
Front Shock Absorbers				
Rs-25-160 27,000# R-Series Fire/Emergency Service Single Rear Axle				
5.63 Rear Axle Ratio				
Iron Rear Axle Carrier With Standard Axle Housing				
Mxl 17N Meritor Extended Lube Main Driveline With Full Round Yokes				
Meritor 16.5X7 P Cam Rear Brakes, Double Anchor, Cast Shoes				
Fire And Emergency Severe Service Non-Asbestos Rear Brake Lining				
Brake Cams And Chambers On Rear Side Of Drive Axle(S)				
Webb Heavy Weight Cast Iron Rear Brake Drums				
Skf Scotseal Plus Xl Rear Oil Seals				
Haldex Goldseal Longstroke 1-Drive Axle Spring Parking Chambers				
Bendix Versajust Automatic Rear Slack Adjusters				
Organic Sae 80/90 Rear Axle Lube				
27,000# Flat Leaf Spring Rear Suspension With Helper And Radius Rod For Fire/Emergency Service				
Spring Suspension - No Axle Spacers				
Standard U-Bolt Pad				
Fore/Aft Control Rods				
Air Brake Package				
Wabco 4S/4M Abs With Traction Control				
Reinforced Nylon, Fabric Braid And Wire Braid Chassis Air Lines				
Fiber Braid Parking Brake Hose				
Standard Brake System Valves				
Standard Air System Pressure Protection System				
Std U.S. Front Brake Valve				
Relay Valve With 5-8 Psi Crack Pressure, No Rear Proportioning Valve				
No Brake Line Air Dryer				
Steel Air Brake Reservoirs				
Pull Cable On Wet Tank, Petcock Drain Valves On All Other Air Tanks				
Upgraded Chassis Multiplexing Unit				
Upgraded Bulkhead Multiplexing Unit				
4425Mm (174 Inch) Wheelbase				
11/32X3-1/2X10-3/16 Inch Steel Frame (8.73Mmx258.8Mm/0.344X10.19 Inch) 120Ksi				

11 Sperti Drive, Edgewood, KY 41017
(859)331-0360
FAX: (859)331-0399

Fire Apparatus and Custom Fabricators

DESCRIPTION	QTY	PRICE	STD. OPT.	INCLUDED OPT.
SUMMIT ETB TANKER PROGRAM		$140,130.00		
1600Mm (63 Inch) Rear Frame Overhang				
Frame Overhang Range: 61 Inch To 70 Inch				
Calc'D Back Of Cab To Rear Susp C/L (Ca) : 108.45 In				
Calculated Effective Back Of Cab To Rear Suspension C/L (Ca) : 105.45 In				
Calc'D Frame Length - Overall : 266.39				
Calc'D Space Available For Deckplate : 108.45 In				
Calculated Frame Space LH Side : 80.57 In				
Calculated Frame Space RH Side : 117.31 In				
Square End Of Frame				
Front Closing Crossmember				
Standard Weight Engine Crossmember				
Standard Midship #1 Crossmember(S)				
Standard Rearmost Crossmember				
Standard Suspension Crossmember				
Three-Piece 14 Inch Painted Steel Bumper With Collapsible Ends				
Front Tow Hooks - Frame Mounted				
Bumper Mounting For Single License Plate				
Fender And Front Of Hood Mounted Front Mudflaps				
Grade 8 Threaded Hex Headed Frame Fasteners				
Tank Body 0 To 1500 Gallons				
50 Gallon/189 Liter Short Rectangular Aluminum Fuel Tank - LH				
Rectangular Fuel Tank(S)				
Plain Aluminum/Painted Steel Fuel/Hydraulic Tank(S) With Painted Bands				
Fuel Tank(S) Forward				
Plain Step Finish				
Fuel Tank Cap(S)				
Alliance Fuel Filter/Water Separator				
Equiflo Inboard Fuel System				
High Temperature Reinforced Nylon Fuel Line				
Goodyear G291 315/80R22.5 18 Ply Radial Front Tires				
Goodyear G291 315/80R22.5 18 Ply Radial Rear Tires				
Conmet Pre-Set Bearing Iron Front Hubs				
Conmet Pre-Set Bearing Iron Rear Hubs				
Maxion Wheels 90260 22.5X8.25 10-Hub Pilot 6.13 Inset 2-Hand Hd Steel Disc Front Wheels				
Accuride 28828 22.5X8.25 10-Hub Pilot 2-Hand Hd Steel Disc Rear Wheels				
Front Wheel Mounting Nuts				
Rear Wheel Mounting Nuts				

Fire Apparatus and Custom Fabricators

DESCRIPTION	QTY	PRICE	STD. OPT.	INCLUDED OPT.
SUMMIT ETB TANKER PROGRAM		$140,130.00		
106 Inch Bbc Flat Roof Aluminum Conventional Cab				
Air Cab Mounts				
Cab Roof Reinforcements For Roof Mounted Components				
LH And RH Exterior Grab Handles With Single Rubber Insert				
Painted Plastic Grille				
Argent Silver Hood Mounted Air Intake Grille				
Fiberglass Hood				
Single Electric Horn				
Door Locks And Ignition Switch Keyed The Same				
Rear License Plate Mount End Of Frame				
Integral Headlight/Marker Assembly				
(5) Amber Marker Lights				
Integral Stop/Tail/Backup Lights				
Standard Front Turn Signal Lamps				
Dual West Coast Bright Finish Heated Mirrors With LH And RH Remote				
Door Mounted Mirrors				
102 Inch Equipment Width				
LH And RH 8 Inch Bright Finish Convex Mirrors Mounted Under Primary Mirrors				
Standard Side/Rear Reflectors				
63X14 Inch Tinted Rear Window				
Tinted Door Glass LH And RH With Tinted Non-Operating Wing Windows				
Manual Door Window Regulators				
Tinted Windshield				
2 Gallon Windshield Washer Reservoir Without Fluid Level Indicator, Frame Mounted				
Opal Gray Cloth Interior				
Molded Plastic Door Panel				
Molded Plastic Door Panel				
Black Mats With Single Insulation				
Forward Roof Mounted Console With Upper Storage Compartments Without Netting				
In Dash Storage Bin				
(2) Cup Holders LH And RH Dash				
Gray/Charcoal Flat Dash				
Smart Switch Expansion Module				
Heater, Defroster And Air Conditioner				
Standard Hvac Ducting				
Main Hvac Controls With Recirculation Switch				

Fire Apparatus and Custom Fabricators

DESCRIPTION	QTY	PRICE	STD. OPT.	INCLUDED OPT.
SUMMIT ETB TANKER PROGRAM		$140,130.00		
Standard Heater Plumbing				
Denso Heavy Duty Air Conditioner Compressor				
Binary Control, R-134A				
Standard Insulation				
Solid-State Circuit Protection And Fuses				
12V Negative Ground Electrical System				
Dome Light With 3-Way Switch Activated By LH And RH Doors				
Cab Door Latches With Manual Door Locks				
Seats Inc 911 Universal Series High Back Air Suspension Driver Seat With NFPA 1901-2009 Compliant Seat Sensor				
Seats Inc 911 Universal Series High Back Non Suspension Passenger Seat With Underseat Storage And NFPA 1901-2009 Compliant Seat Sensor				
LH And RH Integral Door Panel Armrests				
Black Cordura Plus Cloth Driver Seat Cover				
Black Cordura Plus Cloth Passenger Seat Cover				
3 Point High Visibility Orange Retractor Driver And RH Front Passenger Seat Belts With NFPA 1901-2009 Compliant Sensor And Dash Harness				
Fixed Steering Column				
4-Spoke 18 Inch (450Mm) Steering Wheel				
Driver And Passenger Interior Sun Visors				
Gray Driver Instrument Panel				
Gray Center Instrument Panel				
Black Gauge Bezels				
Low Air Pressure Light And Buzzer				
2 Inch Primary And Secondary Air Pressure Gauges				
Intake Mounted Air Restriction Indicator Without Graduations				
97 Db Backup Alarm				
Electronic Cruise Control With Switches In LH Switch Panel				
Key Operated Ignition Switch And Integral Start Position; 4 Position Off/Run/Start/Accessory				
Odometer/Trip/Hour/Diagnostic/Voltage Display: 1X7 Character, 26 Warning Lamps, Data Linked, Icu3				
Diagnostic Interface Connector, 9 Pin, Sae J1939, Located Below Dash				
2 Inch Electric Fuel Gauge				
Programmable Rpm Control - Electronic Engine				
Electrical Engine Coolant Temperature Gauge				
2 Inch Transmission Oil Temperature Gauge				
Engine And Trip Hour Meters Integral Within Driver Display				
Enhanced Stability Control				

11 Sperti Drive, Edgewood, KY 41017
(859)331-0360
FAX: (859)331-0399

Fire Apparatus and Custom Fabricators

DESCRIPTION	QTY	PRICE	STD. OPT.	INCLUDED OPT.
SUMMIT ETB TANKER PROGRAM		$140,130.00		
Electric Engine Oil Pressure Gauge				
Electronic Mph Speedometer With Secondary Kph Scale, Without Odometer				
Standard Vehicle Speed Sensor				
Electronic 3000 Rpm Tachometer				
Idle Limiter, Electronic Engine				
(1) Normally Opened And (1) Normally Closed Electric Over Air Solenoids For Fire Pump Control With Park Brake Interlock And Dash Switch				
One On/Off Rocker Switch In The Dash With Indicator Light And Wire Routed To Chassis At Back Of Cab, Label Opt				
Digital Voltage Display Integral With Driver Display				
Single Electric Windshield Wiper Motor With Delay				
Marker Light Switch Integral With Headlight Switch				
One Valve Parking Brake System With Warning Indicator				
Self Canceling Turn Signal Switch With Dimmer, Washer/Wiper And Hazard In Handle				
Integral Electronic Turn Signal Flasher With Hazard Lamps Overriding Stop Lamps				
Cab Color A: L0214Eb Red Elite Bc				
Black, High Solids Polyurethane Chassis Paint				
Maxion Wheels W Powder White (N0006Ea) Front Wheels/Rims				
Powder White (N0006Ea) Rear Wheels/Rims (Pkwht21, Tkwht21, W, Tw)				
Bumper Paint: FP24812 Argent Silver Dupont Flex				
U.S. Fmvss Certification				
CHASSIS UPFIT				
Rear Tow Eye - Painted Steel	1		x	
Vehicle Data Recorder - Weldon	1		x	
Seatbelt Warning System - Weldon	1		x	
Wheels - Unfinshed (Factory Color)	1		x	
Chassis Steps - Factory Steps	1		x	
Grab Handles, Cab - Provided By Chassis Manufacturer	1		x	
Tire Pressure Monitoring System - Valve Stem Indicators	6		x	
Rear Mud Flaps	2		x	
Fluid Identifcation Plate	1		x	
Fuel Type Label - Diesel	1		x	
Seating Label - Maximum Seating Of 2	1		x	
Vehicle Height Label	1		x	
Seatbelt Warning Label	1		x	

Fire Apparatus and Custom Fabricators

DESCRIPTION	QTY	PRICE	STD. OPT.	INCLUDED OPT.
SUMMIT ETB TANKER PROGRAM		$140,130.00		
Helmet In Cab Warning Label	1		x	
NFPA Helmet Storage - Department To Store In Body	1			
BODY				
2000 Gallon Elliptical Tanker Body (Single Axle)	1		x	
Body Subframe - Aluminum Extruded	1		x	
Body Material - All Aluminum 5052 .160 Smooth Aluminum	1		x	
Body Mounting	1		x	
Polymer Isolation Strips - Chassis Frame	1		x	
Corrosion Protection Pkg - Anti Corrosion Compound and Nylon Spacers on All Fasteners	1		x	
Single Axle Elliptical Tanker Body- Base Aluminum (No Options)	1		x	
Aluminum Outer Rail - Painted Job Color	1		x	
Underride Protecter - Steel Painted Black	1		x	
TANK				
2000 Gallon Elliptical Tank - Poly	1		x	
ISO Certification - 9001:2008	1		x	
Construction - Pt3 Polypropylene	1		x	
Closed Curve Baffling	1		x	
Fill Tower W/Cover - Center Mount	1		x	
Vent Overflow - 6 Inch	1		x	
Sump	1		x	
3" Npt Threaded Outlet Bottom Of Sump	1		x	
1" Tank Sump Drain	1		x	
Rear Tank Fills - 3 Inch 1/4 Turn Akron Ball Valve	2		x	
Rear Mounted Dump Chute Flange - 10" Newton	1		x	
Rear Mounted Upper Light Box - Polypropylene	1		x	
Smooth Black Tank Surface	1			
Tank Mounting - UPFf Compliant	1		x	
Capacity Certification - 2000 Gallon	1		x	
Warranty - Limited Lifetime	1		x	
10" Rear Mount Manual Newton Dump Chute - Painted Steel	1		x	
Water Level Indicator - Frc WI200 Rear Light Box Mount	1		x	
12 VOLT ELECTRICAL REQUIRMENTS				
12 Volt Elctrical System - Non Multiplex System	1		x	
Wiring Requirments - NFPA 1901	1		x	
SAE Practices & FMVSS Compliant	1		x	
Wiring - GXL Stranded Copper	1		x	
12V Dc Voltage Output Testing & Documentation	1		x	

Fire Apparatus and Custom Fabricators

DESCRIPTION	QTY	PRICE	STD. OPT.	INCLUDED OPT.
SUMMIT ETB TANKER PROGRAM		$140,130.00		
Switch Panel - Cab mounted - One Master Switch Warning System	1		x	
Reserve Capacity Test:	1		x	
Alternator Performance Test At Idle:	1		x	
Alternator Performance Test At Full Load:	1		x	
Low Voltage Alarm Test:	1		x	
Documentation - NFPA Test Results	1		x	
Battery Disconnect Switch - Chassis Mfg Provided	1		x	
Battery Light - Green L.E.D.	1		x	
Clearance / Marker Lights - Tecniq P2 L.E.D	15		x	
Brake Lights, - Tecniq T40 Red L.E.D.	2		x	
Turn Lights - Tecniq T41 Amber L.E.D.	2		x	
Backup Lights - Tecniq T40 Clear L.E.D.	2		x	
Engine Compartment Light - Grote 61491-5 Switched	1		x	
Ground Area Lighting 2 Door Cab - Tecniq L.E.D	1		x	
Ground Area Lighting Body - Tecniq L.E.D	1		x	
Low Voltage Alarm	1		x	
Battery Charging Receptacle -	1		x	
Emergency Warning Systems	1		x	
Light Bar - Whelen 60" Freedom L.E.D.	1		x	
Lower Zone A Warning Lights - Whelen 600 Series	2		x	
Lower Zone A Warning Light Chrome Flange - Whelen 6Eflange	2		x	
Lower Zone B&D Intersection Lights - Whelen 500 Series	2		x	
Lower Zone B&D Intersection Light Chrome Flange - Whelen 5Eflange	2		x	
Lower Zone B&D Rear Warning Lights - Whelen 600 Series	2		x	
Lower Zone B&D Rear Warning Light Chrome Flange - Whelen 6Eflange	2		x	
Lower Zone C Warning Lights - Whelen 600 Series	2		x	
Lower Zone C Warning Light Chrome Flange - Whelen 6Eflange	2		x	
Upper Zone B,D & C Warning Lights - L31Hrfn Beacons L.E.D.	2		x	
Electronic Siren - Code 3 3694	1		x	
Siren Speaker - Code 3 Pb100B	1		x	
PAINT				
Undercoating - Delete	1		x	
PPG Two Stage Urthane - Body Job Color	1		x	
Underride Protecter - Enamel Black	1		x	
STRIPING				
NFPA Perimeter - 4" White Reflective Cab	1		x	
NFPA Perimeter - 4" White Reflective Body	1		x	

Fire Apparatus and Custom Fabricators

DESCRIPTION	QTY	PRICE	STD. OPT.	INCLUDED OPT.
SUMMIT ETB TANKER PROGRAM		$140,130.00		
NFPA Chevron 6' Red/Amber Reflective - Tank	1		x	
WARRANTIES				
Limited Warranty (1-Year)	1		x	
Paint Warranty (7-Year)	1		x	
Electrical Warranty (10-Year)	1		x	
Body Structural Warranty (20-Year)	1		x	
SUMMIT PROGRAM TANKER OPTIONS				
CHASSIS OPTIONS:				
Detroit Da-F-12.0-3 12,000# Ff1 71.5 Kpi/3.74 Drop Single Front Axle		-$462.00		
Detroit Da-F-16.0-5 16,000# Fl1 71.0 Kpi/3.74 Drop Single Front Axle		$739.20		
Detroit Da-F-18.0-5 18,000# Fl1 71.0 Kpi/3.74 Drop Single Front Axle		$855.60		
Rs-23-161 24,000# R-Series Fire/Emergency Service Single Rear Axle		-$1,700.00		
Rs-30-185 31,000# U-Series Fire/Emergency Service Single Rear Axle		$1,764.00		
Dual West Coast Molded-In Color Heated Mirrors		$94.80		
Dual West Coast Bright Finish Heated Mirrors		$122.40		
Dual West Coast Bright Finish Mirrors		$98.40		
Dual West Coast Bright Finish Heated Mirrors With Lh And Rh Remote		$252.00		
Cum ISL 300 Hp @ 2000 Rpm, 2200 Gov Rpm, 860 Lb/Ft @ 1300 Rpm		-$985.20		
Cum ISL 350 Hp @ 2000 Rpm, 2200 Gov Rpm, 1000 Lb/Ft @ 1400 Rpm		$264.00		
Alcoa Lvl One 88367X 22.5X8.25 10-Hub Pilot 5.79 Inset Aluminum Disc Front Wheels		$260.40		
Alcoa Lvl One 88367X 22.5X8.25 10-Hub Pilot Aluminum Disc Rear Wheels		$458.40		
Polished Front And Rear Wheels; Outside Of Outer Wheels Only		$130.80		
LH And RH Electric Powered Windows		$139.20		
LH And RH Electric Door Locks		$93.60		
Hood Mounted Chromed Plastic Grille		$78.00		
Chrome Hood Mounted Air Intake Grille		$38.40		

11 Sperti Drive, Edgewood, KY 41017
(859)331-0360
FAX: (859)331-0399

Fire Apparatus and Custom Fabricators

DESCRIPTION	QTY	PRICE	STD. OPT.	INCLUDED OPT.
SUMMIT ETB TANKER PROGRAM		$140,130.00		
Three-Piece 14 Inch Chromed Steel Bumper With Collapsible Ends		$182.40		
Seats Inc 911 2 Man Mid Back Non Suspension Passenger Seat With Nfpa 2009 Compliant Seat Sensors		$817.20		
Seats Inc 911 Universal Series High Back Non Suspension Passenger Seat With Underseat Storage And Nfpa 1901-2009 Compliant Seat Sensor		-$156.00		
(1) Dash Mounted Pto Switch With Indicator Lamp For Customer Installed Pto		$93.60		
Stationary Painted Full Grille For Chassis Without Integral Front Frame Extensions		$254.40		
Power And Ground Wiring Provision For Cb		$18.00		
Roof/Overhead Console Cb Radio Provision With Face Plate		$68.40		
Two On/Off Rocker Switches In The Dash With Indicator Lights And Wire Routed To Chassis At Back Of Cab, Label Opt		$62.40		
Four On/Off Rocker Switches In The Dash With Indicator Lights And Wire Routed To Chassis At Back Of Cab, Label Opt		$106.80		
Customer Furnished Din Radio Package		$91.20		
Am/Fm/Wb Radio With Front Auxiliary Input		$205.20		
Synthetic 75W-90 Front Axle Lube		$12.00		
Synthetic 75W-90 Rear Axle Lube		$58.80		
Adjustable Tilt And Telescoping Steering Column		$326.40		
Preco 1040 87 Db To 112 Db Automatic Self-Adjusting Backup Alarm		$34.80		
RH Down View Mirror		$24.00		
CHASSIS UPFIT OPTIONS:				
Treadplate Vertical Fill Panels Using Existing Cab Steps		$520.00		
Punch Raised treadplate Full Cab Steps (2 Door)		$1,790.00		
Front Bumper Extension 18" With Gravel Shield		$3,680.00		
Center Console for radio & siren - Treadplate Aluminum (No Storage)		$775.00		
Center Consolefor radio & siren - Smooth Aluminum (No Storage)		$720.00		
Book / Binder Misc Storage for console		$400.00		
Rubberized coating for console		$260.00		
Raised or Angled switch panel on console		$115.00		
Trailer Hitch - 2" Class 4 receiver (includes 4 way plug)		$990.00		
Seven way trailer plug in lieu of 4 way		$70.00		
Stainless Steel Wheel Simulators		$890.00		
Air Horns - Hood Mounted		$814.00		
Air Horns - Bumper Mounted (Need Numper Extension)		$960.00		
Automatic Tire Chains - Rudd		$2,981.00		

Fire Apparatus and Custom Fabricators

DESCRIPTION	QTY	PRICE	STD. OPT.	INCLUDED OPT.
SUMMIT ETB TANKER PROGRAM		$140,130.00		
Automatic Tire Chains - On Spot		$2,705.00		
Lighted Bumper Poles (Rookie Rods)		$325.00		
BODY OPTIONS:				
Rear Body Apron with NFPA Treadplate Step in Lieu of ICC Underride		$2,244.00		
Rear Body Apron with Punch Raise Treadplate Step in Lieu of Underride		$2,420.00		
Front Roadside Compartment with Hansen Roll Up Door (Painted 66"x32") Includes Single Compartment Light and Compartment Ajar Warning Light In Cab.		$2,653.00		
Front Roadside Compartment with ROM Roll Up Door (Painted 66"x32") Includes Single Compartment Light and Compartment Ajar Warning Light In Cab.		$2,730.00		
Front Curbside Compartment with Hansen Roll Up Door (Painted 66"x32") Includes Single Compartment Light and Compartment Ajar Warning Light In Cab.		$2,653.00		
Front Curbside Compartment with ROM Roll Up Door (Painted 66"x32") Includes Single Compartment Light and Compartment Ajar Warning Light In Cab.		$2,730.00		
Swing Doors in Lieu of Roll Up Doors		$175.00		
Front Skirting / Filler Panels Painted (used with compartment)		$572.00		
Forward Wheel Well Skirt (Used if front body compartment not selected)		$1,584.00		
Rub Rails with Conspicuity Stripe		$600.00		
Folding Steps on Front Of Body (Pair)		$220.00		
Protective TreadPlate Overlay On Front of Compartments		$245.00		
STORAGE OPTIONS:				
Tail Board Mounted "Doughnut" Hose Holder		$695.00		
Adjustable Trays (each)		$200.00		
Adjustable Slide Trays - 300 lb (each)		$555.00		
HD Slide Tray - 600 lb (each)		$650.00		
Plastic Floor Tile compartment floors		$118.00		
Plastic Floor Tile installed on shelf / Tray (each)		$75.00		
Hard Suction Hose Troughs (Aluminum)		$650.00		
Hard Suction Hose Troughs (Stainless)		$750.00		
Hose Trough for Soft Hose Storage with Securing Straps		$765.00		
Ladder Storage Brackets On Cat Walk		$790.00		
Electric Hydraulic Pond Rack in Lieu of Manual		$4,150.00		
Treadplate Cover for Hydraulic Pond Rack		$1,276.00		

Fire Apparatus and Custom Fabricators

DESCRIPTION	QTY	PRICE	STD. OPT.	INCLUDED OPT.
SUMMIT ETB TANKER PROGRAM		$140,130.00		
Painted Cover for Hydraulic Pond Rack		$1,590.00		
Leading Edge wind Guard On Front Of Manual Dump Tank Rack		$720.00		
TANK OPTIONS:				
4" Rear Tank Fill		$850.00		
4" Rear Tank Fill w/ 5" Storz		$977.00		
90 Degree Swivel Dump Elbow w/ Extension Chute In Lieu OF Single Center		$2,200.00		
Left Side 10" Manual Newton Dump w/ Manual Dump Chute		$2,279.00		
Right Side 10" Manual Newton Dump w Manual Dump Chute		$2,279.00		
Left Side 10" Air Newton Dump w/ Air Dump Chute (Painted)		$4,995.00		
Right Side 10" Air Newton Dump w/ Air Dump Chute (Painted)		$4,995.00		
Left Side 10" Air Newton Dump w/ Air Dump Chute (Stainless Steel)		$5,235.00		
Right Side 10" Air Newton Dump w/ Air Dump Chute (Stainless Steel)		$5,235.00		
Rear Electric Dump Chute in Lieu of Manual		$800.00		
Left Side 10" Electrical Newton Dump w/ Electric Dump Chute		$4,215.00		
Right Side 10" Electrical Newton Dump w Electric Dump Chute		$4,215.00		
Left Side 10" Electrical Newton Dump w/ Electric Dump Chute (SS)		$4,620.00		
Right Side 10" Electrical Newton Dump w Electric Dump Chute (SS)		$4,620.00		
Auxiliary Dump Chute Switches in Cab		$345.00		
Minature Water Level Display In Cab		$420.00		
Ladder to Access Mid Tank Fill Tower		$968.00		
PUMPS & PLUMBING:				
Compartment mounted 2.5" Tank to Pump Line (pump not included)		$339.00		
Compartment mounted 3.0" Tank to Pump Line (pump not included)		$395.00		
Hale HPT300 Portable Gasoline Pump Mounted in Compartment		$3,975.00		
Hale 500 GPM Module (2 x 2.5" dicharges, 5" Intake, 2 x 1.75 X-lay)		$40,304.00		
Hale 1000 GPM Module (4 x 2.5" dicharges, 6" Intake, 2 x 1.75 X-lay)		$41,672.00		
1.5" Trash Line Run to Front Bumper (Must Select Bumper Extension)		$2,090.00		
ELECTRIC:				
Kussmaul Battery Conditioner with Auto Eject In Lieu of Polarity Plug		$995.00		
Kussmaul Pump Plus, Battery Conditioner with Auto Eject In Lieu of Polarity Plug		$1,760.00		
Auto Air Eject For House Air Supply		$445.00		
LED Strip Compartment Lighting in lieu single LED		$1,145.00		
LED Ground lights under front of body		$240.00		
LED Ground light under front bumper		$180.00		
LED Browlight on front of cab		$1,290.00		

Fire Apparatus and Custom Fabricators

DESCRIPTION	QTY	PRICE	STD. OPT.	INCLUDED OPT.
SUMMIT ETB TANKER PROGRAM		$140,130.00		
LED Whelen 900 Scene lighting - One (1) on Each Side Rear (2 total)		$740.00		
LED Whelen 900 Scene lighting - Two (2) on Upper Rear		$740.00		
LED Whelen 900 Scene lighting - One (1) on Center Rear		$355.00		
LED FRC Spectra 900 Scene lighting - One (1) on Each Side (2 total)		$1,060.00		
LED FRC Spectra 900Scene lighting - Two (2) on Upper Rear		$970.00		
PAINT:				
Painted front tank bulkhead only		$695.00		
Painted Tank		$2,850.00		
Two Tone Chassis - Two Door		$2,810.00		
Two Tone Chassis - Four Door		$3,210.00		
Painting Jambs and under hood in addition to paint (2 Door)		$600.00		
Painting Jambs and under hood in addition to paint (4 Door)		$1,200.00		
Two Tone Body		$2,550.00		
Body Undercoating		$415.00		
Painted Steel Wheels to Job Color		$460.00		
STRIPING & LETTERING:				
NFPA Perimeter Stripe 4"		$642.00		
1- 4 -1 NFPA Perimeter Stripe 4" with 1" stripe above and below		$792.00		
Z pattern in stripe		$130.00		
Sixty (60) 3" Reflective Lettering		$705.00		

11 Sperti Drive, Edgewood, KY 41017
(859)331-0360
FAX: (859)331-0399

CUSTOM DESIGN IS OUR SPECIALTY, QUALITY IS OUR COMMITMENT!

11 Sperti Drive Edgewood, KY 41017 (859) 331-0360 www.SummitFireApparatus.com

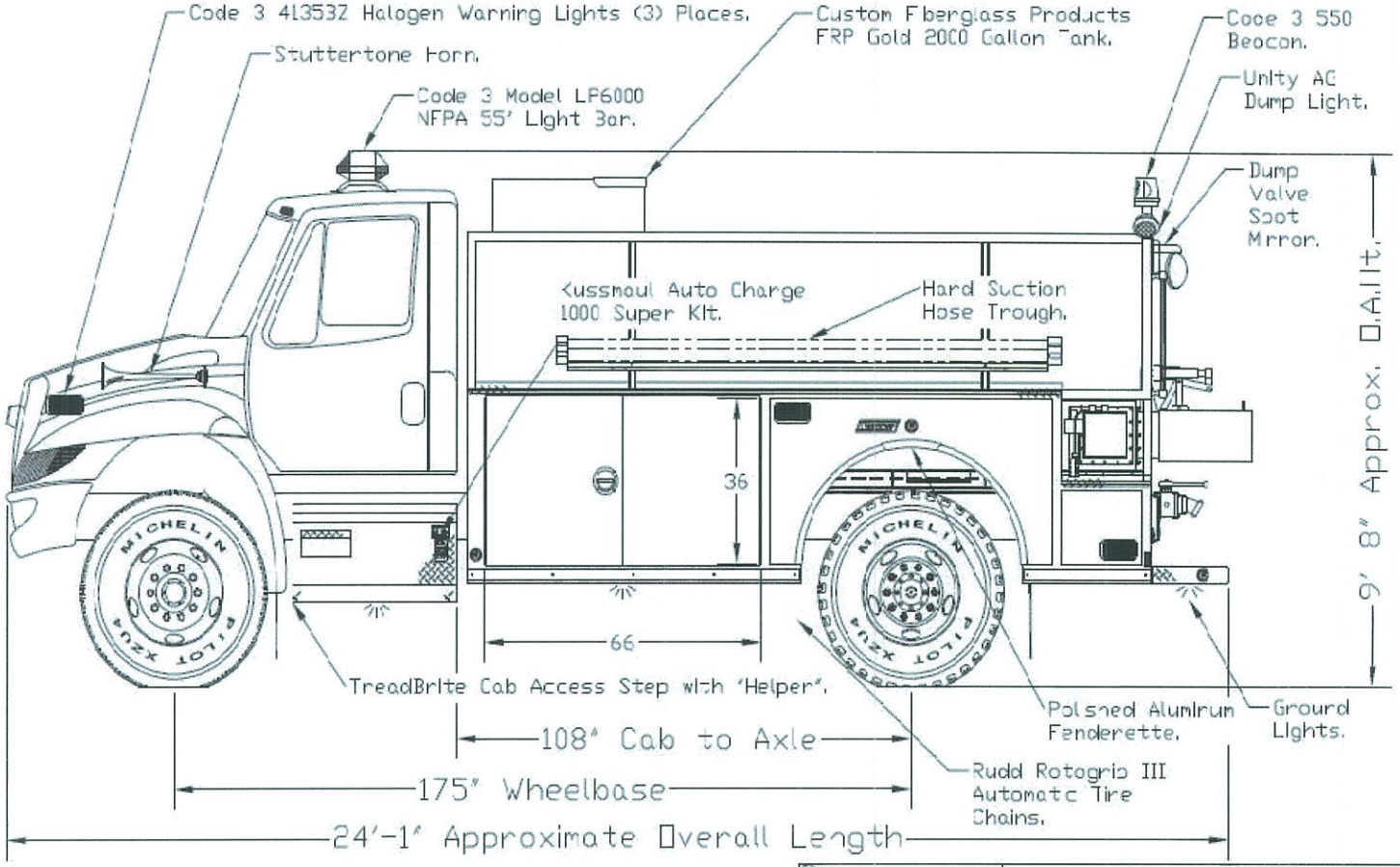

Left Side View

Time Modified: 12:01 P.M.
Date Modified: 7/2/2003
Date Created: 11/19/1999
Drawing File: F:\Drawings\Tanker\Dryside\Kenton\19398001.dwg
Scale: 1=24

1	SUMMIT Fire Apparatus and Custom Fabricators 11 Spirit Dr, Edgewood, Ky. 41017	
2		
3		
4		
5	SCALE:1/2"=1'-0" APPROVED BY:	DRAWN BY:RSC
6	DATE:06/19/03	JOB#19398
7	Kenton County F.P.D.	
8		
9	Tanker	DRAWING NUMBER 19398001
REVISIONS		

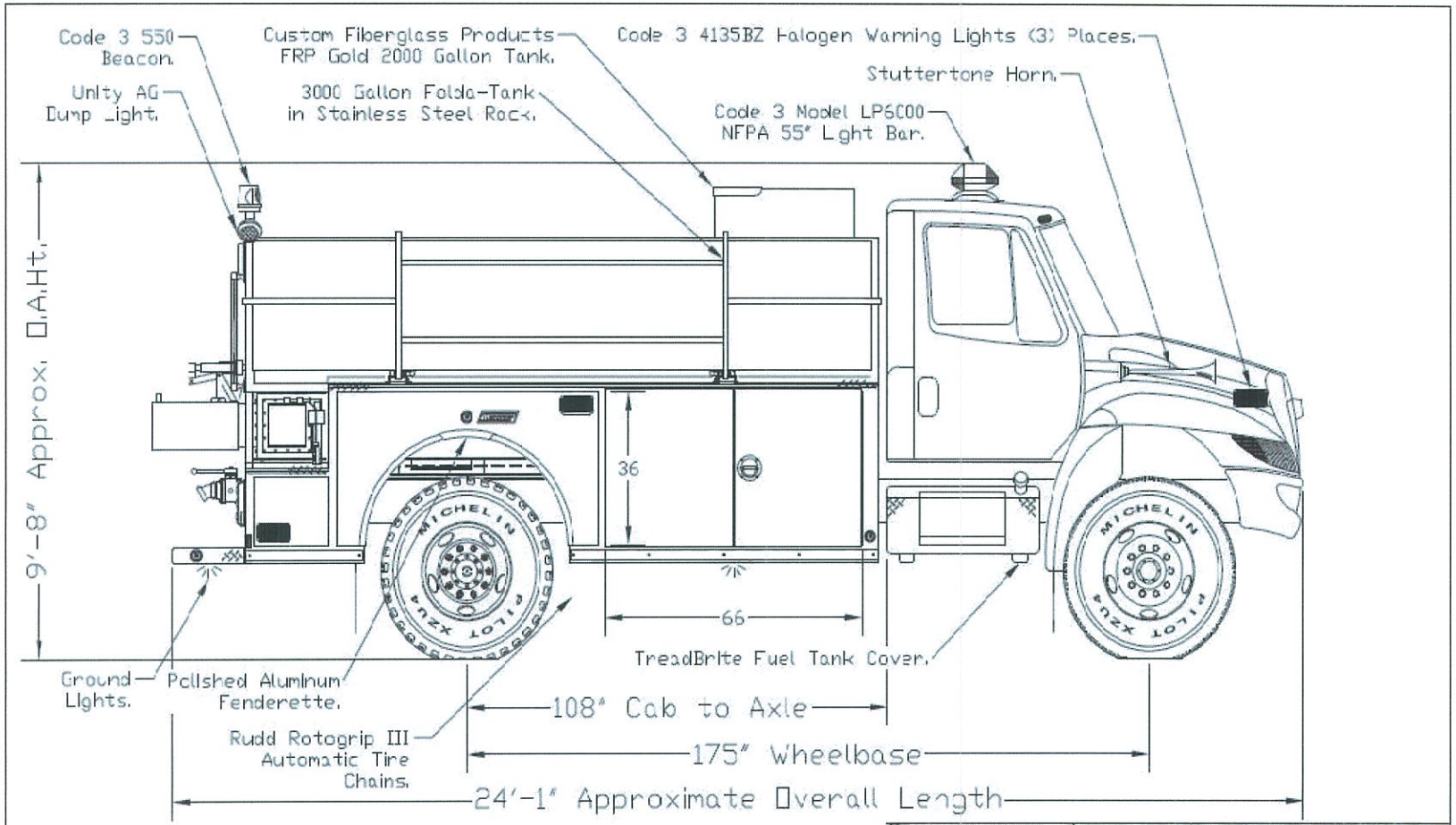

Right Side View

Time Modified: 12:01 P.M.
Date Modified: 7/2/2003
Date Created: 11/19/1999
Drawing File: F:\Drawings\Tanker\Dryside\Kenton\19398002.dwg
Scale: 1=24

1	SUMMIT Fire Apparatus and Custom Fabricators 11 Scerf Dr Edgewood, Ky. 41017		
2			
3			
4			
5	SCALE:1/2"=1'-0"	APPROVED BY:	DRAWN BY:RSC
6	DATE:06/20/03		JOB#19398
7	Kenton County F.P.D.		
8			
9	Tanker		DRAWING NUMBER 19398002
REVISIONS			

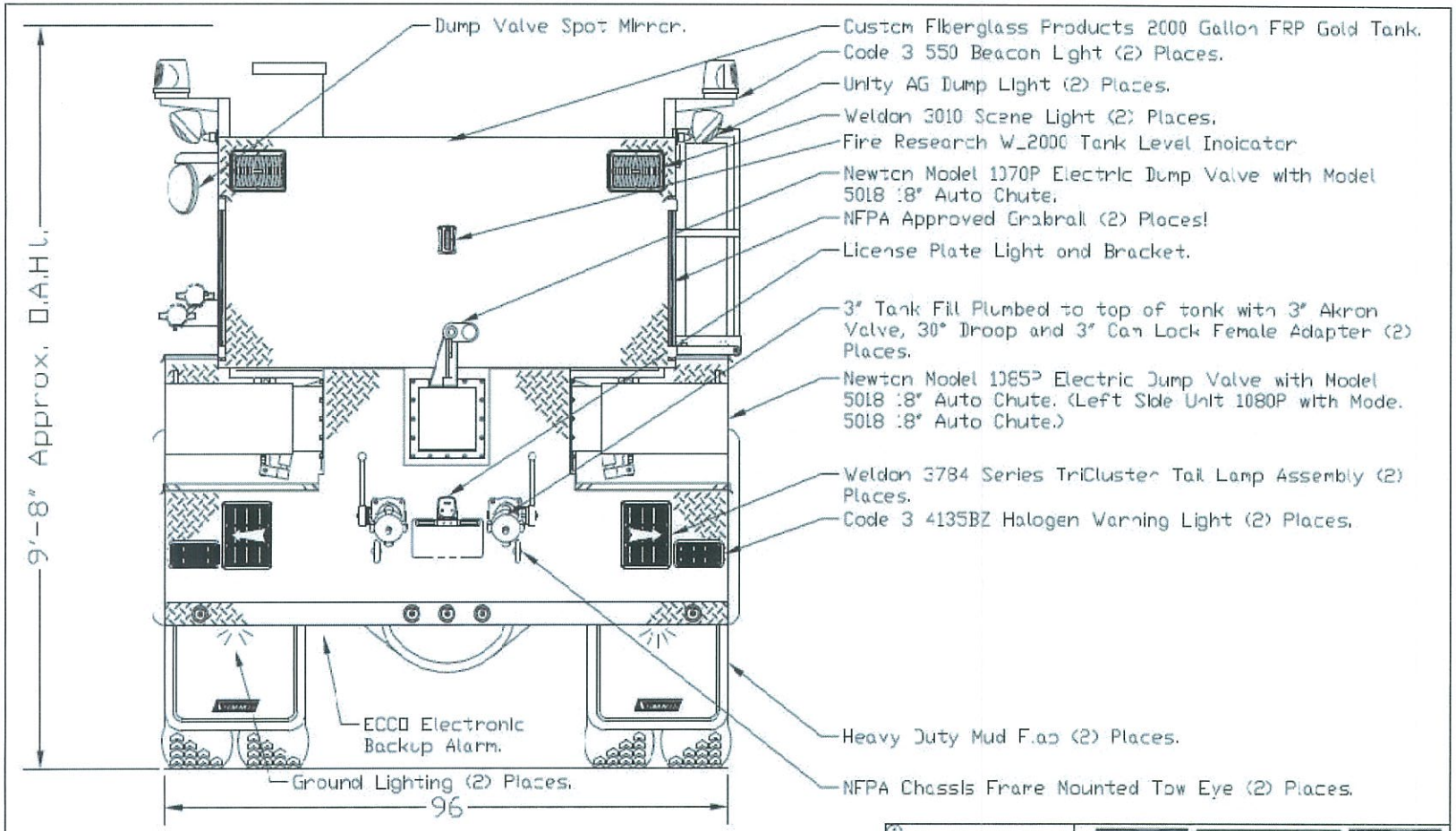

Rear View

Time Modified: 12:01 P.M
Date Modified: 7/2/2003
Date Created: 8/1/2000
Drawing File: F:\Drawings\Tanker\Dryside\Kenton\19398003.dwg
Scale: 1=16

1	SUMMIT Fire Apparatus and Custom Fabricators 11 Spiral Dr, Edgewood, Ky. 41017	
2		
3		
4		
5	SCALE:3/4"=1'-0" APPROVED BY	DRAWN BY:RSC
6	DATE:06/19/03	JOB#19398
7	Kenton County F.P.D.	
8		
9	Tanker	DRAWING NUMBER 19398003
REVISIONS		

Fire Apparatus and Custom Fabricators

DESCRIPTION	QTY	PRICE	STD. OPT	INCLUDED OPT.
SUMMIT 2000 GALLON DRYSIDE TANKER		$185,200.00		
Freigtliner M2 106 Conventional Chassis	1		x	
2015 Model Year Specified				
Set Back Axle - Truck				
Straight Truck Provision				
LH Primary Steering Location				
Domiciled, Usa 50 States (Including California And Carb Opt-In States)				
Fire Service Vocation				
Emergency Vehicles Business Segment				
Liquid Bulk Commodity				
Terrain/Duty: 100% (All) Of The Time, In Transit, Is Spent On Paved Roads				
Maximum 8% Expected Grade				
Smooth Concrete Or Asphalt Pavement - Most Severe In-Transit (Between Sites) Road Surface				
Medium Truck Warranty				
Expected Front Axle(S) Load : 14000.0 Lbs				
Expected Rear Drive Axle(S) Load : 26000.0 Lbs				
Expected Gross Vehicle Weight Capacity : 40000.0 Lbs				
Fire Tank - No Main Driveline Driven Split-Shaft PTO/Pump				
Expected Truck Body Length : 14.0 Ft				
Expected Body/Payload Cg Height Above Frame "Xx" Inches : 32.0 In				
Cum Isl 330 Hp @ 2000 Rpm, 2200 Gov Rpm, 1000 Lb/Ft @ 1400 Rpm				
60 Mph Road Speed Limit				
Cruise Control Speed Limit Same As Road Speed Limit				
PTO Mode Engine Rpm Limit - 1100 Rpm				
PTO Rpm With Cruise Set Switch - 700 Rpm				
PTO Rpm With Cruise Resume Switch - 800 Rpm				
PTO Mode Cancel Vehicle Speed - 5 Mph				
PTO Governor Ramp Rate - 250 Rpm Per Second				
PTO Minimum Rpm - 700				
Regen Inhibit Speed Threshold - 5 Mph				
2013 Onboard Diagnostics/2010 Epa/Carb/Ghg14				
2008 Carb Emission Certification - Exempted Vehicle; No Clean Idle Label Required				
Standard Oil Pan				
Engine Mounted Oil Check And Fill				
One Piece Valve Cover				

Fire Apparatus and Custom Fabricators

DESCRIPTION	QTY	PRICE	STD. OPT	INCLUDED OPT.
SUMMIT 2000 GALLON DRYSIDE TANKER		$185,200.00		
Side Of Hood Air Intake With NFPA Compliant Ember Screen And Fire Retardant Donaldson Air Cleaner				
Dr 12V 275 Amp 40-Si Brushless Pad Alternator With Remote Battery Voltage Sense				
(2) Alliance Model 1231, Group 31, 12 Volt Maintenance Free 2250 Cca				
Battery Box Frame Mounted				
Standard Battery Jumpers				
Single Battery Box Frame Mounted LH Side Under Cab				
Wire Ground Return For Battery Cables With Additional Frame Ground Return				
Non-Polished Battery Box Cover				
Positive Load Disconnect With Cab Mounted Control Switch Mounted Outboard Driver Seat				
Positive And Negative Posts For Jumpstart Located On Frame Next To Starter				
Cummins Turbocharged 18.7 Cfm Air Compressor With Internal Safety Valve				
Standard Air Compressor Governor				
Air Compressor Discharge Line				
Gvg, Fire And Emergency Service Vehicles Engine Warning				
Cummins Exhaust Brake Integral With Variable Geometry Turbo With On/Off Dash Switch				
RH Outboard Under Step Mounted Horizontal Aftertreatment System Assembly With RH Horizontal Tailpipe				
Engine Aftertreatment Device, Automatic Over The Road Regeneration And Dash Mounted Regeneration Request Switch				
Standard Exhaust System Length				
RH Standard Horizontal Tailpipe				
6 Gallon Diesel Exhaust Fluid Tank				
100 Percent Diesel Exhaust Fluid Fill				
LH Medium Duty Standard Diesel Exhaust Fluid Tank Location				
Standard Diesel Exhaust Fluid Pump Mounting				
Standard Diesel Exhaust Fluid Tank Cap				
Horton Drivemaster On/Off Fan Drive				
Automatic Fan Control With Dash Switch And Indicator Light, Non Engine Mounted				
Cummins Spin On Fuel Filter				
Combination Full Flow/Bypass Oil Filter				
1100 Square Inch Aluminum Radiator				
Antifreeze To -34F, Noat Extended Life Coolant				
Gates Blue Stripe Coolant Hoses Or Equivalent				

Fire Apparatus and Custom Fabricators

DESCRIPTION	QTY	PRICE	STD. OPT	INCLUDED OPT.
SUMMIT 2000 GALLON DRYSIDE TANKER		$185,200.00		
Constant Tension Hose Clamps For Coolant Hoses				
Radiator Drain Valve				
Lower Radiator Guard				
Aluminum Flywheel Housing				
Electric Grid Air Intake Warmer				
Delco 12V 38Mt Hd Starter With Integrated Magnetic Switch				
Allison 3000 Evs Automatic Transmission With PTO Provision				
Allison Vocational Package 227 - Available On 3000/4000 Product Families With Vocational Model Evs				
Allison Vocational Rating For Fire Truck/Emergency Vehicle Applications Available With All Product Families				
Primary Mode Gears, Lowest Gear 1, Start Gear 1, Highest Gear 5, Available For 3000/4000 Product Families Only				
Secondary Mode Gears, Lowest Gear 1, Start Gear 1, Highest Gear 5, Available For 3000/4000 Product Families Only				
Vehicle Interface Wiring With Body Builder Connector Mounted Back Of Cab				
Electronic Transmission Customer Access Connector Mounted Back Of Cab				
Magnetic Plugs, Engine Drain, Transmission Drain, Axle(S) Fill And Drain				
Push Button Electronic Shift Control, Dash Mounted				
Transmission Prognostics - Enabled 2013				
Water To Oil Transmission Cooler, In Radiator End Tank				
Transmission Oil Check And Fill With Electronic Oil Level Check				
Synthetic Transmission Fluid (Tes-295 Compliant)				
Detroit Da-F-14.7-3 14,700# Ff1 71.5 Kpi/3.74 Drop Single Front Axle				
Bendix 16.5X6D Es Cast Spider Cam Front Brakes, Single Anchor, Fabricated Shoes				
Fire And Emergency Severe Service, Non-Asbestos Front Lining				
Conmet Cast Iron Front Brake Drums				
Skf Scotseal Plus Xl Front Oil Seals				
Vented Front Hub Caps With Window, Center And Side Plugs - Oil				
Standard Spindle Nuts For All Axles				
Bendix Versajust Automatic Front Slack Adjusters				
Trw Tas-85 Power Steering				
Power Steering Pump				
2 Quart See Through Power Steering Reservoir				
Organic Sae 80/90 Front Axle Lube				
14,600# Taperleaf Front Suspension				
Maintenance Free Rubber Bushings - Front Suspension				

Fire Apparatus and Custom Fabricators

DESCRIPTION	QTY	PRICE	STD. OPT	INCLUDED OPT.
SUMMIT 2000 GALLON DRYSIDE TANKER		$185,200.00		
Front Shock Absorbers				
Rs-25-160 27,000# R-Series Fire/Emergency Service Single Rear Axle				
5.63 Rear Axle Ratio				
Iron Rear Axle Carrier With Standard Axle Housing				
Mxl 17N Meritor Extended Lube Main Driveline With Full Round Yokes				
Meritor 16.5X7 P Cam Rear Brakes, Double Anchor, Cast Shoes				
Fire And Emergency Severe Service Non-Asbestos Rear Brake Lining				
Brake Cams And Chambers On Rear Side Of Drive Axle(S)				
Webb Heavy Weight Cast Iron Rear Brake Drums				
Skf Scotseal Plus Xl Rear Oil Seals				
Haldex Goldseal Longstroke 1-Drive Axle Spring Parking Chambers				
Bendix Versajust Automatic Rear Slack Adjusters				
Organic Sae 80/90 Rear Axle Lube				
27,000# Flat Leaf Spring Rear Suspension With Helper And Radius Rod For Fire/Emergency Service				
Spring Suspension - No Axle Spacers				
Standard U-Bolt Pad				
Fore/Aft Control Rods				
Air Brake Package				
Wabco 4S/4M Abs With Traction Control				
Reinforced Nylon, Fabric Braid And Wire Braid Chassis Air Lines				
Fiber Braid Parking Brake Hose				
Standard Brake System Valves				
Standard Air System Pressure Protection System				
Std U.S. Front Brake Valve				
Relay Valve With 5-8 Psi Crack Pressure, No Rear Proportioning Valve				
No Brake Line Air Dryer				
Steel Air Brake Reservoirs				
Pull Cable On Wet Tank, Petcock Drain Valves On All Other Air Tanks				
Upgraded Chassis Multiplexing Unit				
Upgraded Bulkhead Multiplexing Unit				
4425Mm (174 Inch) Wheelbase				
11/32X3-1/2X10-3/16 Inch Steel Frame (8.73Mmx258.8Mm/0.344X10.19 Inch) 120Ksi				
1600Mm (63 Inch) Rear Frame Overhang				
Frame Overhang Range: 61 Inch To 70 Inch				

Fire Apparatus and Custom Fabricators

DESCRIPTION	QTY	PRICE	STD. OPT	INCLUDED OPT.
SUMMIT 2000 GALLON DRYSIDE TANKER		$185,200.00		
Calc'D Back Of Cab To Rear Susp C/L (Ca) : 108.45 In				
Calculated Effective Back Of Cab To Rear Suspension C/L (Ca) : 105.45 In				
Calc'D Frame Length - Overall : 266.39				
Calc'D Space Available For Deckplate : 108.45 In				
Calculated Frame Space LH Side : 80.57 In				
Calculated Frame Space RH Side : 117.31 In				
Square End Of Frame				
Front Closing Crossmember				
Standard Weight Engine Crossmember				
Standard Midship #1 Crossmember(S)				
Standard Rearmost Crossmember				
Standard Suspension Crossmember				
Three-Piece 14 Inch Painted Steel Bumper With Collapsible Ends				
Front Tow Hooks - Frame Mounted				
Bumper Mounting For Single License Plate				
Fender And Front Of Hood Mounted Front Mudflaps				
Grade 8 Threaded Hex Headed Frame Fasteners				
Tank Body 0 To 1500 Gallons				
50 Gallon/189 Liter Short Rectangular Aluminum Fuel Tank - LH				
Rectangular Fuel Tank(S)				
Plain Aluminum/Painted Steel Fuel/Hydraulic Tank(S) With Painted Bands				
Fuel Tank(S) Forward				
Plain Step Finish				
Fuel Tank Cap(S)				
Alliance Fuel Filter/Water Separator				
Equiflo Inboard Fuel System				
High Temperature Reinforced Nylon Fuel Line				
Goodyear G291 315/80R22.5 18 Ply Radial Front Tires				
Goodyear G291 315/80R22.5 18 Ply Radial Rear Tires				
Conmet Pre-Set Bearing Iron Front Hubs				
Conmet Pre-Set Bearing Iron Rear Hubs				
Maxion Wheels 90260 22.5X8.25 10-Hub Pilot 6.13 Inset 2-Hand Hd Steel Disc Front Wheels				
Accuride 28828 22.5X8.25 10-Hub Pilot 2-Hand Hd Steel Disc Rear Wheels				
Front Wheel Mounting Nuts				
Rear Wheel Mounting Nuts				
106 Inch Bbc Flat Roof Aluminum Conventional Cab				
Air Cab Mounts				
Cab Roof Reinforcements For Roof Mounted Components				

Fire Apparatus and Custom Fabricators

DESCRIPTION	QTY	PRICE	STD. OPT	INCLUDED OPT.
SUMMIT 2000 GALLON DRYSIDE TANKER		$185,200.00		
LH And RH Exterior Grab Handles With Single Rubber Insert				
Painted Plastic Grille				
Argent Silver Hood Mounted Air Intake Grille				
Fiberglass Hood				
Single Electric Horn				
Door Locks And Ignition Switch Keyed The Same				
Rear License Plate Mount End Of Frame				
Integral Headlight/Marker Assembly				
(5) Amber Marker Lights				
Integral Stop/Tail/Backup Lights				
Standard Front Turn Signal Lamps				
Dual West Coast Bright Finish Heated Mirrors With LH And RH Remote				
Door Mounted Mirrors				
102 Inch Equipment Width				
LH And RH 8 Inch Bright Finish Convex Mirrors Mounted Under Primary Mirrors				
Standard Side/Rear Reflectors				
63X14 Inch Tinted Rear Window				
Tinted Door Glass LH And RH With Tinted Non-Operating Wing Windows				
Manual Door Window Regulators				
Tinted Windshield				
2 Gallon Windshield Washer Reservoir Without Fluid Level Indicator, Frame Mounted				
Opal Gray Cloth Interior				
Molded Plastic Door Panel				
Molded Plastic Door Panel				
Black Mats With Single Insulation				
Forward Roof Mounted Console With Upper Storage Compartments Without Netting				
In Dash Storage Bin				
(2) Cup Holders LH And RH Dash				
Gray/Charcoal Flat Dash				
Smart Switch Expansion Module				
Heater, Defroster And Air Conditioner				
Standard Hvac Ducting				
Main Hvac Controls With Recirculation Switch				
Standard Heater Plumbing				
Denso Heavy Duty Air Conditioner Compressor				
Binary Control, R-134A				
Standard Insulation				

Fire Apparatus and Custom Fabricators

DESCRIPTION	QTY	PRICE	STD. OPT	INCLUDED OPT.
SUMMIT 2000 GALLON DRYSIDE TANKER		$185,200.00		
Solid-State Circuit Protection And Fuses				
12V Negative Ground Electrical System				
Dome Light With 3-Way Switch Activated By LH And RH Doors				
Cab Door Latches With Manual Door Locks				
Seats Inc 911 Universal Series High Back Air Suspension Driver Seat With NFPA 1901-2009 Compliant Seat Sensor				
Seats Inc 911 Universal Series High Back Non Suspension Passenger Seat With Underseat Storage And NFPA 1901-2009 Compliant Seat Sensor				
LH And RH Integral Door Panel Armrests				
Black Cordura Plus Cloth Driver Seat Cover				
Black Cordura Plus Cloth Passenger Seat Cover				
3 Point High Visibility Orange Retractor Driver And RH Front Passenger Seat Belts With NFPA 1901-2009 Compliant Sensor And Dash Harness				
Fixed Steering Column				
4-Spoke 18 Inch (450Mm) Steering Wheel				
Driver And Passenger Interior Sun Visors				
Gray Driver Instrument Panel				
Gray Center Instrument Panel				
Black Gauge Bezels				
Low Air Pressure Light And Buzzer				
2 Inch Primary And Secondary Air Pressure Gauges				
Intake Mounted Air Restriction Indicator Without Graduations				
97 Db Backup Alarm				
Electronic Cruise Control With Switches In LH Switch Panel				
Key Operated Ignition Switch And Integral Start Position; 4 Position Off/Run/Start/Accessory				
Odometer/Trip/Hour/Diagnostic/Voltage Display: 1X7 Character, 26 Warning Lamps, Data Linked, Icu3				
Diagnostic Interface Connector, 9 Pin, Sae J1939, Located Below Dash				
2 Inch Electric Fuel Gauge				
Programmable Rpm Control - Electronic Engine				
Electrical Engine Coolant Temperature Gauge				
2 Inch Transmission Oil Temperature Gauge				
Engine And Trip Hour Meters Integral Within Driver Display				
Enhanced Stability Control				
Electric Engine Oil Pressure Gauge				
Electronic Mph Speedometer With Secondary Kph Scale, Without Odometer				
Standard Vehicle Speed Sensor				

11 Sperti Drive, Edgewood, KY 41017
(859)331-0360
FAX: (859)331-0399

Fire Apparatus and Custom Fabricators

DESCRIPTION	QTY	PRICE	STD. OPT	INCLUDED OPT.
SUMMIT 2000 GALLON DRYSIDE TANKER		$185,200.00		
Electronic 3000 Rpm Tachometer				
Idle Limiter, Electronic Engine				
(1) Normally Opened And (1) Normally Closed Electric Over Air Solenoids For Fire Pump Control With Park Brake Interlock And Dash Switch				
One On/Off Rocker Switch In The Dash With Indicator Light And Wire Routed To Chassis At Back Of Cab, Label Opt				
Digital Voltage Display Integral With Driver Display				
Single Electric Windshield Wiper Motor With Delay				
Marker Light Switch Integral With Headlight Switch				
One Valve Parking Brake System With Warning Indicator				
Self Canceling Turn Signal Switch With Dimmer, Washer/Wiper And Hazard In Handle				
Integral Electronic Turn Signal Flasher With Hazard Lamps Overriding Stop Lamps				
Cab Color A: L0214Eb Red Elite Bc				
Black, High Solids Polyurethane Chassis Paint				
Maxion Wheels W Powder White (N0006Ea) Front Wheels/Rims				
Powder White (N0006Ea) Rear Wheels/Rims (Pkwht21, Tkwht21, W, Tw)				
Bumper Paint: FP24812 Argent Silver Dupont Flex				
U.S. Fmvss Certification				
CHASSIS UPFIT				
Rear Tow Eye - Painted Steel	2		x	
Vehicle Data Recorder - Weldon	1			
Seatbelt Warning System - Weldon	1			
Wheels - Unfinshed (Factory Color)	1			x
Wheel Simulators - Stainless Steel Covers	1			x
Chassis Steps - Treadplate Aluminum With Treadplate Tank Cover	1			x
Grab Handles, Cab - Provided By Chassis Manufacturer	1		x	
Cab Console - Aluminum W/ Enclosed Storage	1			x
Tire Pressure Monitoring System - Valve Stem Indicators	6		x	
Front Mud Flaps	1			x
Rear Mud Flaps	2		x	
Fluid Identifcation Plate	1		x	
Fuel Type Label - Diesel	1		x	
Seating Label - Maximum Seating Of 2	1		x	
Vehicle Height Label	1		x	
Seatbelt Warning Label	1		x	
Helmet In Cab Warning Label	1		x	

Fire Apparatus and Custom Fabricators

DESCRIPTION	QTY	PRICE	STD. OPT	INCLUDED OPT.
SUMMIT 2000 GALLON DRYSIDE TANKER		$185,200.00		
NFPA Helmet Storage - Department To Store In Body	1		x	
Air Horns - Hood Mounted	1			x
Air Horn Activation - Drivers Steering Wheel & Officer Foot Switch	1			x
BODY - Dryside				
2000 Gallon Dryside Tanker Body (Single Axle)	1		x	
Body Subframe - Aluminum Extruded	1		x	
Body Material - All Aluminum 5052 .160 Smooth Aluminum	1		x	
Body Mounting	1		x	
Polymer Isolation Strips - Chassis Frame	1		x	
Single Axle Dryside Tanker Body- Base Aluminum (No Options)	1		x	
Extended Body Sides (Eclosed Tank) - Formed And Extruded Aluminum	1		x	
Equipment Mounting Provisions Body Side - Welded Unistrut	2			x
Body Dimensions - 140" Long,66" High, 96" Wide	1		x	
Side Body Compartments - Two (2) Forward Of Axle	2		x	
Compartment Interiors - Unfinished Aluminum	1		x	
Compartment Floors - Raised Sweep-out Type	1		x	
Compartment Top Cat Walks - Treadplate Aluminum Form Broke Drip Edge	1			x
Rear Drop For Tailboard - Steel	1		x	
Rear Tail Board - 12 inch NFPA Aluminum Treadplate	1			x
RubRails - Aluminum Extruded	1			x
Fenderettes - Polised Stainless Steel	2		x	
Wheel Well Liners - Full Removable Poly Liners	2		x	
Corrosion Protection Pkg - Anti Corrosion Compound and Nylon Spacers on All Fasteners	1		x	
Hose Bed -Delete	1		x	
Hose Bed Step - Delete	1		x	
Dump Shoot Spot Mirror - Mounted on Drivers Rear Of Body	1			x
COMPARTMENTATION				
Two (2) Low Side Compartments - Swing Door	1		x	
L1 Compartment Dimensions - 47" Wide x 72" High x 25" Deep	1		x	
L1 Adjustable Shelf Hard ware - P100 Aluminum Unistrut	4			x
R1 Compartment Dimensions - 47" Wide x 72" High x 25" Deep	1		x	
R1 Adjustable Shelf Hard ware - P100 Aluminum Unistrut	4			x
Compartment Doors - Flush Swing Style	4			x
Compartment Door Material - .160 and .125, 5052 Aluminum	1		x	
Door Finish - Painted	1		x	
Door Access - D Ring Latch With Inner Door Un Latched	1		x	

Fire Apparatus and Custom Fabricators

DESCRIPTION	QTY	PRICE	STD. OPT	INCLUDED OPT.
SUMMIT 2000 GALLON DRYSIDE TANKER		$185,200.00		
Hinges - Continuous Stainless Steel	1		x	
Door Locks - Delete	1		x	
BODY UPFIT				
Treadplate Front Of Body	1			x
Body Relief For Side Dump Chutes	2			x
Portable Dump Tank Rack - Manual Stainless Steel (Open Style)	1			x
Chrome Polished Stanchions For Beacons	2			x
Tail Board Mounted "Doughnut" Hose Holder	2			x
Hard Suction Hose Storage Troughs - Stainless Steel	2			x
Stainless Steel Escussion/Protection Plates For Hard Suction	2			x
Adjustable Slide Out Tray - 2 Aluminum (One Each Side)	2			x
Plastic Floor Tile - Slide trays and compartment floors	2			x
TANK				
2000 Gallon Dryside Tank - Poly	1		x	
ISO Certification - 9001:2008	1		x	
Construction - Pt3 Polypropylene	1		x	
NFPA Approved Baffling	1		x	
Extended Fill Tower W/Cover - Drivers Front Mount	1		x	
Vent Overflow - 6 Inch	1		x	
Sump	1		x	
3" Npt Threaded Outlet Bottom Of Sump	1		x	
3" Tank To Pump Gated Line Plumbed To Sump Opening Plumbed To The Drivers Side Compartment	1			x
3" Akron 8000 Series Ball Valve	1			x
1" Tank Sump Drain	1		x	
Rear Tank Fills - 3 Inch 1/4 Turn Akron Ball Valve	2		x	
Rear Mounted Dump Chute Flange - 10" Newton	1		x	
Side Rear Mounted Dump Chute Flange - 10" Newton	1		x	
Smooth Black Tank Surface	1		x	
Tank Mounting - Upf Compliant	1		x	
Capacity Certification - 2000 Gallon	1		x	
Warranty - Limited Lifetime	1		x	
10" Rear Mount Electrical Newton Dump Chute - Painted Steel	1		x	
Rear Electric Newton 18" Chute Extension - Painted Steel	1		x	
Dump Chute Activation - Electric Switch Adjacent to Dump Chute	1		x	
10" Drivers Side Mount Manual Newton Dump Chute - Painted Steel	1			x
Drivers Side Electric Newton 18" Chute Extension - Painted Steel	1			x
Dump Chute Activation - Electric Switch Adjacent to Dump Chute	1			x

11 Sperti Drive, Edgewood, KY 41017
(859)331-0360
FAX: (859)331-0399

Fire Apparatus and Custom Fabricators

DESCRIPTION	QTY	PRICE	STD. OPT	INCLUDED OPT.
SUMMIT 2000 GALLON DRYSIDE TANKER		$185,200.00		
10" Passenger Side Mount Electrical Newton Dump Chute - Painted Steel	1			x
Passenger Side Electric Newton 18" Chute Extension - Painted Steel	1			x
Dump Chute Activation - Electric Switch Adjacent to Dump Chute	1			x
Water Level Indicator - Frc Wl200 Rear Light Box Mount	1			x
12 VOLT ELECTRICAL REQUIRMENTS				
12 Volt Elctrical System - Non Multiplex System	1		x	
Wiring Requirments - NFPA 1901	1		x	
SAE Practices & FMVSS Compliant	1		x	
Wiring - GXL Stranded Copper	1		x	
12V Dc Voltage Output Testing & Documentation	1		x	
Switch Panel - Cab mounted - One Master Switch Warning System	1		x	
Reserve Capacity Test:	1		x	
Alternator Performance Test At Idle:	1		x	
Alternator Performance Test At Full Load:	1		x	
Low Voltage Alarm Test:	1		x	
Documentation - NFPA Test Results	1		x	
Battery Disconnect Switch - Chassis Mfg Provided	1		x	
Battery Light - Green L.E.D.	1		x	
Clearance / Marker Lights - Tecniq P2 L.E.D	19		x	
Brake Lights, - Tecniq K60 Red L.E.D.	1		x	
Turn Lights - Tecniq K60 Amber L.E.D.	2		x	
Backup Lights - Tecniq K60 Clear L.E.D.	2		x	
Light Cluster Housing - Chrome	2		x	
Engine Compartment Light - Grote 61491-5 Switched	1		x	
Ground Area Lighting 2 Door Cab - Tecniq L.E.D	2		x	
Ground Area Lighting Body - Tecniq L.E.D	4		x	
Low Voltage Alarm	1		x	
Battery Conditioner - Kussmaul Auto Charge 1000	1		x	
Battery Charging Receptacle - Kussmaul Auto Eject (Step area)	1		x	
Battery Charge Status Indicator - Kussmaul (Step Area)	1		x	
EMERGENCY WARNING SYSTEMS				
Light Bar - Whelen 60" Freedom L.E.D.	1		x	
Lower Zone A Warning Lights - Whelen 600 Series L.E.D.	1		x	
Lower Zone A Warning Light Chrome Flange - Whelen 6Eflange	2		x	
Lower Zone B&D Intersection Lights - Whelen 500 Series	2		x	
Lower Zone B&D Intersection Light Chrome Flange - Whelen 5Eflange	2		x	
Lower Zone B&D Mid Ship Warning Lights - Whelen 600 Series	2		x	

11 Sperti Drive, Edgewood, KY 41017
(859)331-0360
FAX: (859)331-0399

Fire Apparatus and Custom Fabricators

DESCRIPTION	QTY	PRICE	STD. OPT	INCLUDED OPT.
SUMMIT 2000 GALLON DRYSIDE TANKER		$185,200.00		
Lower Zone B&D Mid Ship Warning Light Chrome Flange - Whelen 6Eflange	2		x	
Lower Zone B&D Rear Warning Lights - Whelen 600 Series	2		x	
Lower Zone B&D Rear Warning Light Chrome Flange - Whelen 6Eflange	2		x	
Lower Zone C Warning Lights - Whelen 600 Series	2		x	
Lower Zone C Warning Light Chrome Flange - Whelen 6Eflange	2		x	
Upper Zone B,D & C Warning Lights - L31Hrfn Beacons L.E.D.	2		x	
Electronic Siren - Whelen 295SLSA1	1			
Siren Speaker - Code 3 Pb100B	1			
PAINTING AND STRIPING				
Undercoating - Delete	1		x	
PPG Two Stage Urethane - Body Job Color	1		x	
NFPA Perimeter - 4" White Reflective Cab	1		x	
NFPA Perimeter - 4" White Reflective Body	1		x	
NFPA Chevron 6' Red/Amber Reflective - Body Only	1		x	
STRIPING				
NFPA Perimeter - 4" White Reflective Cab				
NFPA Perimeter - 4" White Reflective Body				
NFPA Chevron 6' Red/Amber Reflective - Body				
WARRANTIES				
Limited Warranty (1-Year)				
Paint Warranty (7-Year)				
Electrical Warranty (10-Year)				
Body Structural Warranty (20-Year)				
SUMMIT TANKER OPTIONS				
CHASSIS OPTIONS:				
Detroit Da-F-12.0-3 12,000# Ff1 71.5 Kpi/3.74 Drop Single Front Axle		-$462.00		
Detroit Da-F-16.0-5 16,000# Fl1 71.0 Kpi/3.74 Drop Single Front Axle		$739.20		

11 Sperti Drive, Edgewood, KY 41017
(859)331-0360
FAX: (859)331-0399

Fire Apparatus and Custom Fabricators

DESCRIPTION	QTY	PRICE	STD. OPT	INCLUDED OPT.
SUMMIT 2000 GALLON DRYSIDE TANKER		$185,200.00		
Detroit Da-F-18.0-5 18,000# Fl1 71.0 Kpi/3.74 Drop Single Front Axle		$855.60		
Rs-23-161 24,000# R-Series Fire/Emergency Service Single Rear Axle		-$1,700.00		
Rs-30-185 31,000# U-Series Fire/Emergency Service Single Rear Axle		$1,764.00		
Dual West Coast Molded-In Color Heated Mirrors		$94.80		
Dual West Coast Bright Finish Heated Mirrors		$122.40		
Dual West Coast Bright Finish Mirrors		$98.40		
Dual West Coast Bright Finish Heated Mirrors With Lh And Rh Remote		$252.00		
Cum ISL 300 Hp @ 2000 Rpm, 2200 Gov Rpm, 860 Lb/Ft @ 1300 Rpm		-$985.20		
Cum ISL 350 Hp @ 2000 Rpm, 2200 Gov Rpm, 1000 Lb/Ft @ 1400 Rpm		$264.00		
Alcoa Lvl One 88367X 22.5X8.25 10-Hub Pilot 5.79 Inset Aluminum Disc Front Wheels		$260.40		
Alcoa Lvl One 88367X 22.5X8.25 10-Hub Pilot Aluminum Disc Rear Wheels		$458.40		
Polished Front And Rear Wheels; Outside Of Outer Wheels Only		$130.80		
LH And RH Electric Powered Windows		$139.20		
LH And RH Electric Door Locks		$93.60		
Hood Mounted Chromed Plastic Grille		$78.00		
Chrome Hood Mounted Air Intake Grille		$38.40		
Three-Piece 14 Inch Chromed Steel Bumper With Collapsible Ends		$182.40		
Seats Inc 911 2 Man Mid Back Non Suspension Passenger Seat With Nfpa 2009 Compliant Seat Sensors		$817.20		
Seats Inc 911 Universal Series High Back Non Suspension Passenger Seat With Underseat Storage And Nfpa 1901-2009 Compliant Seat Sensor		-$156.00		
(1) Dash Mounted Pto Switch With Indicator Lamp For Customer Installed Pto		$93.60		
Stationary Painted Full Grille For Chassis Without Integral Front Frame Extensions		$254.40		
Power And Ground Wiring Provision For Cb		$18.00		
Roof/Overhead Console Cb Radio Provision With Face Plate		$68.40		
Two On/Off Rocker Switches In The Dash With Indicator Lights And Wire Routed To Chassis At Back Of Cab, Label Opt		$62.40		
Four On/Off Rocker Switches In The Dash With Indicator Lights And Wire Routed To Chassis At Back Of Cab, Label Opt		$106.80		
Customer Furnished Din Radio Package		$91.20		

Fire Apparatus and Custom Fabricators

DESCRIPTION	QTY	PRICE	STD. OPT	INCLUDED OPT.
SUMMIT 2000 GALLON DRYSIDE TANKER		$185,200.00		
Am/Fm/Wb Radio With Front Auxiliary Input		$205.20		
Synthetic 75W-90 Front Axle Lube		$12.00		
Synthetic 75W-90 Rear Axle Lube		$58.80		
Adjustable Tilt And Telescoping Steering Column		$326.40		
Preco 1040 87 Db To 112 Db Automatic Self-Adjusting Backup Alarm		$34.80		
RH Down View Mirror		$24.00		
CHASSIS UPFIT OPTIONS:				
Treadplate Vertical Fill Panels Using Existing Cab Steps In Lieu of Full Step		-$1,290.00		
Front Bumper Extension 18" With Gravel Shield		$3,680.00		
Rubberized coating for console		$260.00		
Raised or Angled switch panel on console		$115.00		
Trailer Hitch - 2" Class 4 receiver (includes 4 way plug)		$990.00		
Seven way trailer plug in lieu of 4 way		$70.00		
Automatic Tire Chains - Rudd		$2,981.00		
Automatic Tire Chains - On Spot		$2,705.00		
Lighted Bumper Poles (Rookie Rods)		$325.00		
BODY OPTIONS:				
Rear Side Compartment Below Side Dump Discharge - 16" W x 12" H x 23" D		$1,400.00		
Hose Bed Storage Area Above Tank		$4,464.00		
Leading Edge wind Guard On Front Of Manual Dump Tank Rack		$720.00		
Hydraulic Dump Tank Rack In Lieu Of The Manual		$4,188.00		
Hydraulic Dump Tank Rack Cover - Aluminum Tread Plate		$1,276.00		
Hydraulic Dump Tank Rack Cover - Painted Tread Plate		$1,590.00		
Roll Up Doors in Lieu of Swing Doors		-$175.00		
STORAGE OPTIONS:				
Tail Board Mounted "Doughnut" Hose Holder		$695.00		
Adjustable Trays (each)		$200.00		
Adjustable Slide Trays - 300 lb (each)		$555.00		
HD Slide Tray - 600 lb (each)		$650.00		
Plastic Floor Tile compartment floors		$118.00		
Plastic Floor Tile installed on shelf / Tray (each)		$75.00		
Hard Suction Hose Troughs (Aluminum)		$650.00		
Hard Suction Hose Troughs (Stainless)		$750.00		
Hose Trough for Soft Hose Storage with Securing Straps		$765.00		
Ladder Storage Brackets On Cat Walk		$790.00		

SUMMIT
Fire Apparatus and Custom Fabricators

DESCRIPTION	QTY	PRICE	STD. OPT	INCLUDED OPT.
SUMMIT 2000 GALLON DRYSIDE TANKER		$185,200.00		
TANK OPTIONS:				
4" Rear Tank Fill		$850.00		
4" Rear Tank Fill w/ 5" Storz		$977.00		
90 Degree Swivel Dump Elbow w/ Extension Chute In Lieu OF Single Center		$2,200.00		
Left Side 10" Manual Newton Dump w/ Manual Dump Chute		$2,279.00		
Right Side 10" Manual Newton Dump w Manual Dump Chute		$2,279.00		
Left Side 10" Air Newton Dump w/ Air Dump Chute (Painted)		$4,995.00		
Right Side 10" Air Newton Dump w/ Air Dump Chute (Painted)		$4,995.00		
Left Side 10" Air Newton Dump w/ Air Dump Chute (Stainless Steel)		$5,235.00		
Right Side 10" Air Newton Dump w/ Air Dump Chute (Stainless Steel)		$5,235.00		
Rear Electric Dump Chute in Lieu of Manual		$800.00		
Left Side 10" Electrical Newton Dump w/ Electric Dump Chute		$4,215.00		
Right Side 10" Electrical Newton Dump w Electric Dump Chute		$4,215.00		
Left Side 10" Electrical Newton Dump w/ Electric Dump Chute (SS)		$4,620.00		
Right Side 10" Electrical Newton Dump w Electric Dump Chute (SS)		$4,620.00		
Auxiliary Dump Chute Switches in Cab		$345.00		
Minature Water Level Display In Cab		$420.00		
Ladder to Access Mid Tank Fill Tower		$968.00		
PUMPS & PLUMBING:		$339.00		
Compartment mounted 2.5" Tank to Pump Line (pump not included)		$395.00		
Compartment mounted 3.0" Tank to Pump Line (pump not included)		$3,975.00		
Hale HPT300 Portable Gasoline Pump Mounted in Compartment		$4,150.00		
Hale 500 GPM Module (2 x 2.5" dicharges, 5" Intake, 2 x 1.75 X-lay)		$40,304.00		
Hale 1000 GPM Module (4 x 2.5" dicharges, 6" Intake, 2 x 1.75 X-lay)		$41,672.00		
1.5" Trash Line Run to Front Bumper (Must Select Bumper Extension)		$2,090.00		
ELECTRIC:				
Kussmaul Battery Conditioner with Auto Eject In Lieu of Polarity Plug		$995.00		

11 Sperti Drive, Edgewood, KY 41017
(859)331-0360
FAX: (859)331-0399

Fire Apparatus and Custom Fabricators

DESCRIPTION	QTY	PRICE	STD. OPT	INCLUDED OPT.
SUMMIT 2000 GALLON DRYSIDE TANKER		$185,200.00		
Kussmaul Pump Plus, Battery Conditioner with Auto Eject In Lieu of Polarity Plug		$1,760.00		
Auto Air Eject For House Air Supply		$445.00		
LED Strip Compartment Lighting in lieu single LED		$1,145.00		
LED Ground lights under front of body		$240.00		
LED Ground light under front bumper		$180.00		
LED Browlight on front of cab		$1,290.00		
LED Whelen 900 Scene lighting - One (1) on Each Side Rear (2 total)		$740.00		
LED Whelen 900 Scene lighting - Two (2) on Upper Rear		$740.00		
LED Whelen 900 Scene lighting - One (1) on Center Rear		$355.00		
LED FRC Spectra 900 Scene lighting - One (1) on Each Side (2 total)		$1,060.00		
LED FRC Spectra 900Scene lighting - Two (2) on Upper Rear		$970.00		
PAINT:				
Two Tone Chassis - Two Door		$2,810.00		
Two Tone Chassis - Four Door		$3,210.00		
Painting Jambs and under hood in addition to paint (2 Door)		$600.00		
Painting Jambs and under hood in addition to paint (4 Door)		$1,200.00		
Two Tone Body		$2,550.00		
Painted Steel Wheels to Job Color		$460.00		
Body Undercoating		$415.00		
STRIPING & LETTERING:				
NFPA Perimeter Stripe 4"		$642.00		
1- 4 -1 NFPA Perimeter Stripe 4" with 1" stripe above and below		$792.00		
Z pattern in stripe		$130.00		
Sixty (60) 3" Reflective Lettering		$705.00		

11 Sperti Drive, Edgewood, KY 41017
(859)331-0360
FAX: (859)331-0399

CUSTOM DESIGN IS OUR SPECIALTY, QUALITY IS OUR COMMITMENT!

11 Sperti Drive Edgewood, KY 41017 (859) 331-0360 www.SummitFireApparatus.com

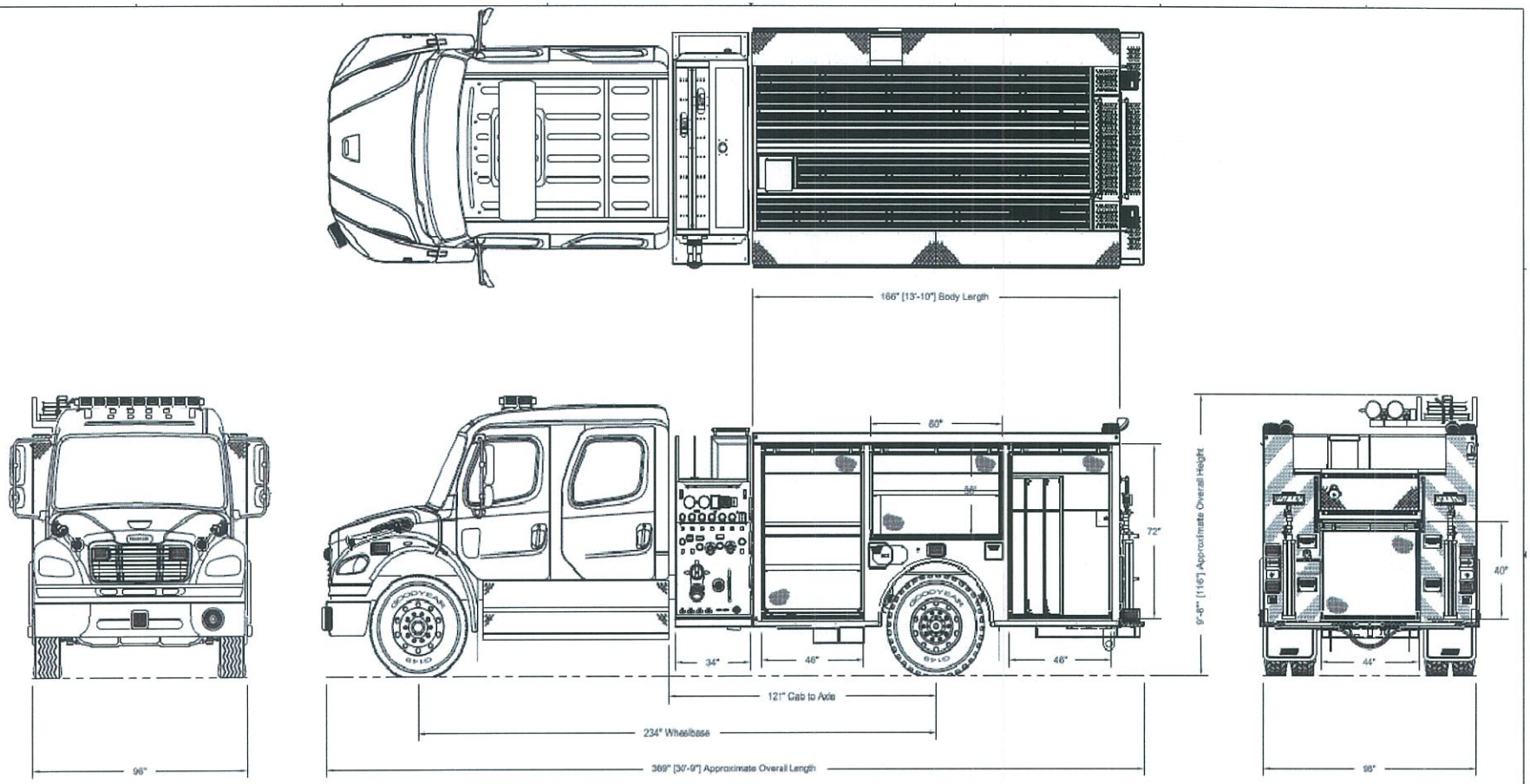

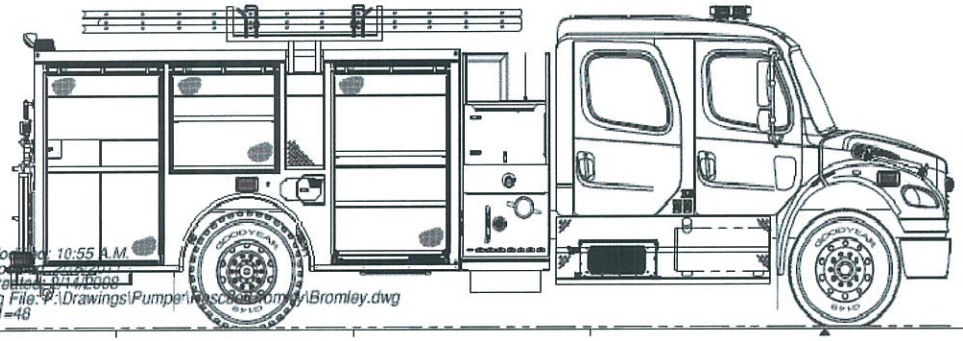

Time Modified: 10:55 A.M.
Date Modified: [illegible]
Date Created: 6/14/2006
Drawing File: F:\Drawings\Pumper\Rescue\Bromley\Bromley.dwg
Scale: 1=48

1	
2	
3	
4	
5	
6	
7	
8	
9	
REVISIONS	

SUMMIT

Fire Apparatus and Custom Fabricators
11 Sperti Dr. Edgewood, Ky. 41017

SCALE: 1/4" = 1'-0"	APPROVED BY:	DRAWN BY: RSC
DATE: 02/17/11		JOB# Broml

Bromley F.D.

Pumper-Rescue

DRAWING NUMBER
Bromley

Fire Apparatus and Custom Fabricators

DESCRIPTION	QTY	PRICE	STD. OPT	INCLUDED OPT.
BROMLEY PUMPER		$223,200.00		
CHASSIS - 2 DOOR				
Freigtliner M2 106 Conventional Chassis	1			
2015 Model Year Specified				
Set Back Axle - Truck				
Straight Truck Provision				
LH Primary Steering Location				
Domiciled, Usa 50 States (Including California And Carb Opt-In States)				
Fire Service Vocation				
Emergency Vehicles Business Segment				
Liquid Bulk Commodity				
Terrain/Duty: 100% (All) Of The Time, In Transit, Is Spent On Paved Roads				
Maximum 8% Expected Grade				
Smooth Concrete Or Asphalt Pavement - Most Severe In-Transit (Between Sites) Road Surface				
Medium Truck Warranty				
Expected Front Axle(S) Load : 14000.0 Lbs				
Expected Rear Drive Axle(S) Load : 26000.0 Lbs				
Expected Gross Vehicle Weight Capacity : 40000.0 Lbs				
Fire Tank - No Main Driveline Driven Split-Shaft PTO /Pump				
Expected Truck Body Length : 14.0 Ft				
Expected Body/Payload Cg Height Above Frame "Xx" Inches : 32.0 In				
Cum Isl 330 Hp @ 2000 Rpm, 2200 Gov Rpm, 1000 Lb/Ft @ 1400 Rpm				
60 Mph Road Speed Limit				
Cruise Control Speed Limit Same As Road Speed Limit				
PTO Mode Engine Rpm Limit - 1100 Rpm				
PTO Rpm With Cruise Set Switch - 700 Rpm				
PTO Rpm With Cruise Resume Switch - 800 Rpm				
PTO Mode Cancel Vehicle Speed - 5 Mph				
PTO Governor Ramp Rate - 250 Rpm Per Second				
PTO Minimum Rpm - 700				
Regen Inhibit Speed Threshold - 5 Mph				
2013 Onboard Diagnostics/2010 Epa/Carb/Ghg14				
2008 Carb Emission Certification - Exempted Vehicle; No Clean Idle Label Required				
Standard Oil Pan				

Fire Apparatus and Custom Fabricators

DESCRIPTION	QTY	PRICE	STD. OPT	INCLUDED OPT.
BROMLEY PUMPER		$223,200.00		
Engine Mounted Oil Check And Fill				
One Piece Valve Cover				
Side Of Hood Air Intake With Nfpa Compliant Ember Screen And Fire Retardant Donaldson Air Cleaner				
Dr 12V 275 Amp 40-Si Brushless Pad Alternator With Remote Battery Voltage Sense				
(2) Alliance Model 1131, Group 31, 12 Volt Maintenance Free 2250 Cca Threaded Stud Batteries				
Battery Box Frame Mounted				
Standard Battery Jumpers				
Single Battery Box Frame Mounted LH Side Under Cab				
Wire Ground Return For Battery Cables With Additional Frame Ground Return				
Non-Polished Battery Box Cover				
Positive Load Disconnect With Cab Mounted Control Switch Mounted Outboard Driver Seat				
Positive And Negative Posts For Jumpstart Located On Frame Next To Starter				
Cummins Turbocharged 18.7 Cfm Air Compressor With Internal Safety Valve				
Standard Air Compressor Governor				
Air Compressor Discharge Line				
Gvg, Fire And Emergency Service Vehicles Engine Warning				
Cummins Exhaust Brake Integral With Variable Geometry Turbo With On/Off Dash Switch				
RH Outboard Under Step Mounted Horizontal Aftertreatment System Assembly With RH Horizontal Tailpipe				
Engine Aftertreatment Device, Automatic Over The Road Regeneration And Dash Mounted Regeneration Request Switch				
Standard Exhaust System Length				
RH Standard Horizontal Tailpipe				
6 Gallon Diesel Exhaust Fluid Tank				
100 Percent Diesel Exhaust Fluid Fill				
LH Medium Duty Standard Diesel Exhaust Fluid Tank Location				
Standard Diesel Exhaust Fluid Pump Mounting				
Standard Diesel Exhaust Fluid Tank Cap				
Horton Drivemaster On/Off Fan Drive				
Automatic Fan Control With Dash Switch And Indicator Light, Non Engine Mounted				
Cummins Spin On Fuel Filter				

Fire Apparatus and Custom Fabricators

DESCRIPTION	QTY	PRICE	STD. OPT	INCLUDED OPT.
BROMLEY PUMPER		$223,200.00		
Combination Full Flow/Bypass Oil Filter				
1100 Square Inch Aluminum Radiator				
Antifreeze To -34F, Noat Extended Life Coolant				
Gates Blue Stripe Coolant Hoses Or Equivalent				
Constant Tension Hose Clamps For Coolant Hoses				
Radiator Drain Valve				
Lower Radiator Guard				
Aluminum Flywheel Housing				
Electric Grid Air Intake Warmer				
Delco 12V 38Mt Hd Starter With Integrated Magnetic Switch				
Allison 3000 Evs Automatic Transmission With PTO Provision				
Allison Vocational Package 198 - Available On 3000/4000 Product Families With Vocational Model Evs				
Allison Vocational Rating For Fire Truck/Emergency Vehicle Applications Available With All Product Families				
Primary Mode Gears, Lowest Gear 1, Start Gear 1, Highest Gear 5, Available For 3000/4000 Product Families Only				
Secondary Mode Gears, Lowest Gear 1, Start Gear 1, Highest Gear 5, Available For 3000/4000 Product Families Only				
Vehicle Interface Wiring With Body Builder Connector Mounted Back Of Cab				
Electronic Transmission Customer Access Connector Mounted Back Of Cab				
Magnetic Plugs, Engine Drain, Transmission Drain, Axle(S) Fill And Drain				
Push Button Electronic Shift Control, Dash Mounted				
Transmission Prognostics - Enabled 2013				
Water To Oil Transmission Cooler, In Radiator End Tank				
Transmission Oil Check And Fill With Electronic Oil Level Check				
Synthetic Transmission Fluid (Tes-295 Compliant)				
Detroit Da-F-14.7-3 14,700# Ff1 71.5 Kpi/3.74 Drop Single Front Axle				
Bendix 16.5X6D Es Cast Spider Cam Front Brakes, Single Anchor, Fabricated Shoes				
Fire And Emergency Severe Service, Non-Asbestos Front Lining				
Conmet Cast Iron Front Brake Drums				
Skf Scotseal Plus Xl Front Oil Seals				
Vented Front Hub Caps With Window, Center And Side Plugs - Oil				
Standard Spindle Nuts For All Axles				
Bendix Versajust Automatic Front Slack Adjusters				

11 Sperti Drive, Edgewood, KY 41017
(859)331-0360
FAX: (859)331-0399

Fire Apparatus and Custom Fabricators

DESCRIPTION	QTY	PRICE	STD. OPT	INCLUDED OPT.
BROMLEY PUMPER		$223,200.00		
Trw Tas-85 Power Steering				
Power Steering Pump				
2 Quart See Through Power Steering Reservoir				
Organic Sae 80/90 Front Axle Lube				
14,600# Taperleaf Front Suspension				
Maintenance Free Rubber Bushings - Front Suspension				
Front Shock Absorbers				
Rs-25-160 27,000# R-Series Fire/Emergency Service Single Rear Axle				
5.63 Rear Axle Ratio				
Iron Rear Axle Carrier With Standard Axle Housing				
Mxl 17N Meritor Extended Lube Main Driveline With Full Round Yokes				
Meritor 16.5X7 P Cam Rear Brakes, Double Anchor, Cast Shoes				
Fire And Emergency Severe Service Non-Asbestos Rear Brake Lining				
Brake Cams And Chambers On Rear Side Of Drive Axle(S)				
Webb Heavy Weight Cast Iron Rear Brake Drums				
Skf Scotseal Plus Xl Rear Oil Seals				
Haldex Goldseal Longstroke 1-Drive Axle Spring Parking Chambers				
Bendix Versajust Automatic Rear Slack Adjusters				
Organic Sae 80/90 Rear Axle Lube				
27,000# Flat Leaf Spring Rear Suspension With Helper And Radius Rod For Fire/Emergency Service				
Spring Suspension - No Axle Spacers				
Standard U-Bolt Pad				
Fore/Aft Control Rods				
Air Brake Package				
Wabco 4S/4M Abs With Traction Control				
Reinforced Nylon, Fabric Braid And Wire Braid Chassis Air Lines				
Fiber Braid Parking Brake Hose				
Standard Brake System Valves				
Standard Air System Pressure Protection System				
Std U.S. Front Brake Valve				
Relay Valve With 5-8 Psi Crack Pressure, No Rear Proportioning Valve				
No Brake Line Air Dryer				
Steel Air Brake Reservoirs				

Fire Apparatus and Custom Fabricators

DESCRIPTION	QTY	PRICE	STD. OPT	INCLUDED OPT.
BROMLEY PUMPER		$223,200.00		
Pull Cable On Wet Tank, Petcock Drain Valves On All Other Air Tanks				
Upgraded Chassis Multiplexing Unit				
Upgraded Bulkhead Multiplexing Unit				
4425Mm (174 Inch) Wheelbase				
11/32X3-1/2X10-3/16 Inch Steel Frame (8.73Mmx258.8Mm/0.344X10.19 Inch) 120Ksi				
1600Mm (63 Inch) Rear Frame Overhang				
Frame Overhang Range: 61 Inch To 70 Inch				
Calc'D Back Of Cab To Rear Susp C/L (Ca) : 108.45 In				
Calculated Effective Back Of Cab To Rear Suspension C/L (Ca) : 105.45 In				
Calc'D Frame Length - Overall : 266.39				
Calc'D Space Available For Deckplate : 108.45 In				
Calculated Frame Space LH Side : 80.57 In				
Calculated Frame Space RH Side : 117.31 In				
Square End Of Frame				
Front Closing Crossmember				
Standard Weight Engine Crossmember				
Standard Midship #1 Crossmember(S)				
Standard Rearmost Crossmember				
Standard Suspension Crossmember				
Three-Piece 14 Inch Painted Steel Bumper With Collapsible Ends				
Front Tow Hooks - Frame Mounted				
Bumper Mounting For Single License Plate				
Fender And Front Of Hood Mounted Front Mudflaps				
Grade 8 Threaded Hex Headed Frame Fasteners				
Tank Body 0 To 1500 Gallons				
50 Gallon/189 Liter Short Rectangular Aluminum Fuel Tank - LH				
Rectangular Fuel Tank(S)				
Plain Aluminum/Painted Steel Fuel/Hydraulic Tank(S) With Painted Bands				
Fuel Tank(S) Forward				
Plain Step Finish				
Fuel Tank Cap(S)				
Alliance Fuel Filter/Water Separator				
Equiflo Inboard Fuel System				
High Temperature Reinforced Nylon Fuel Line				
Goodyear G291 315/80R22.5 18 Ply Radial Front Tires				
Goodyear G291 315/80R22.5 18 Ply Radial Rear Tires				

Fire Apparatus and Custom Fabricators

DESCRIPTION	QTY	PRICE	STD. OPT	INCLUDED OPT.
BROMLEY PUMPER		$223,200.00		
Conmet Pre-Set Bearing Iron Front Hubs				
Conmet Pre-Set Bearing Iron Rear Hubs				
Maxion Wheels 90260 22.5X8.25 10-Hub Pilot 6.13 Inset 2-Hand Hd Steel Disc Front Wheels				
Accuride 28828 22.5X8.25 10-Hub Pilot 2-Hand Hd Steel Disc Rear Wheels				
Front Wheel Mounting Nuts				
Rear Wheel Mounting Nuts				
106 Inch Bbc Flat Roof Aluminum Conventional Cab				
Air Cab Mounts				
Cab Roof Reinforcements For Roof Mounted Components				
LH And RH Exterior Grab Handles With Single Rubber Insert				
Painted Plastic Grille				
Argent Silver Hood Mounted Air Intake Grille				
Fiberglass Hood				
Single Electric Horn				
Door Locks And Ignition Switch Keyed The Same				
Rear License Plate Mount End Of Frame				
Integral Headlight/Marker Assembly				
(5) Amber Marker Lights				
Integral Stop/Tail/Backup Lights				
Standard Front Turn Signal Lamps				
Dual West Coast Bright Finish Heated Mirrors With LH And RH Remote				
Door Mounted Mirrors				
102 Inch Equipment Width				
LH And RH 8 Inch Bright Finish Convex Mirrors Mounted Under Primary Mirrors				
Standard Side/Rear Reflectors				
63X14 Inch Tinted Rear Window				
Tinted Door Glass LH And RH With Tinted Non-Operating Wing Windows				
Manual Door Window Regulators				
Tinted Windshield				
2 Gallon Windshield Washer Reservoir Without Fluid Level Indicator, Frame Mounted				
Opal Gray Cloth Interior				
Molded Plastic Door Panel				
Molded Plastic Door Panel				
Black Mats With Single Insulation				

Fire Apparatus and Custom Fabricators

DESCRIPTION	QTY	PRICE	STD. OPT	INCLUDED OPT.
BROMLEY PUMPER		$223,200.00		
Forward Roof Mounted Console With Upper Storage Compartments Without Netting				
In Dash Storage Bin				
(2) Cup Holders LH And RH Dash				
Gray/Charcoal Flat Dash				
Smart Switch Expansion Module				
Heater, Defroster And Air Conditioner				
Standard Hvac Ducting				
Main Hvac Controls With Recirculation Switch				
Standard Heater Plumbing				
Denso Heavy Duty Air Conditioner Compressor				
Binary Control, R-134A				
Standard Insulation				
Solid-State Circuit Protection And Fuses				
12V Negative Ground Electrical System				
Dome Light With 3-Way Switch Activated By LH And RH Doors				
Cab Door Latches With Manual Door Locks				
Seats Inc 911 Universal Series High Back Air Suspension Driver Seat With Nfpa 1901-2009 Compliant Seat Sensor				
Seats Inc 911 Universal Series High Back Non Suspension Passenger Seat With Underseat Storage And Nfpa 1901-2009 Compliant Seat Sensor				
LH And RH Integral Door Panel Armrests				
Black Cordura Plus Cloth Driver Seat Cover				
Black Cordura Plus Cloth Passenger Seat Cover				
3 Point High Visibility Orange Retractor Driver And RH Front Passenger Seat Belts With Nfpa 1901-2009 Compliant Sensor And Dash Harness				
Fixed Steering Column				
4-Spoke 18 Inch (450Mm) Steering Wheel				
Driver And Passenger Interior Sun Visors				
Gray Driver Instrument Panel				
Gray Center Instrument Panel				
Black Gauge Bezels				
Low Air Pressure Light And Buzzer				
2 Inch Primary And Secondary Air Pressure Gauges				
Intake Mounted Air Restriction Indicator Without Graduations				
97 Db Backup Alarm				
Electronic Cruise Control With Switches In LH Switch Panel				
Key Operated Ignition Switch And Integral Start Position; 4 Position Off/Run/Start/Accessory				

Fire Apparatus and Custom Fabricators

DESCRIPTION	QTY	PRICE	STD. OPT	INCLUDED OPT.
BROMLEY PUMPER		$223,200.00		
Odometer/Trip/Hour/Diagnostic/Voltage Display: 1X7 Character, 26 Warning Lamps, Data Linked, Icu3				
Diagnostic Interface Connector, 9 Pin, Sae J1939, Located Below Dash				
2 Inch Electric Fuel Gauge				
Programmable Rpm Control - Electronic Engine				
Electrical Engine Coolant Temperature Gauge				
2 Inch Transmission Oil Temperature Gauge				
Engine And Trip Hour Meters Integral Within Driver Display				
Enhanced Stability Control				
Electric Engine Oil Pressure Gauge				
Electronic Mph Speedometer With Secondary Kph Scale, Without Odometer				
Standard Vehicle Speed Sensor				
Electronic 3000 Rpm Tachometer				
Idle Limiter, Electronic Engine				
(1) Normally Opened And (1) Normally Closed Electric Over Air Solenoids For Fire Pump Control With Park Brake Interlock And Dash Switch				
One On/Off Rocker Switch In The Dash With Indicator Light And Wire Routed To Chassis At Back Of Cab, Label Opt				
Digital Voltage Display Integral With Driver Display				
Single Electric Windshield Wiper Motor With Delay				
Marker Light Switch Integral With Headlight Switch				
One Valve Parking Brake System With Warning Indicator				
Self Canceling Turn Signal Switch With Dimmer, Washer/Wiper And Hazard In Handle				
Integral Electronic Turn Signal Flasher With Hazard Lamps Overriding Stop Lamps				
Cab Color A: L0214Eb Red Elite Bc				
Black, High Solids Polyurethane Chassis Paint				
Maxion Wheels W Powder White (N0006Ea) Front Wheels/Rims				
Powder White (N0006Ea) Rear Wheels/Rims (Pkwht21, Tkwht21, W, Tw)				
Bumper Paint: Fp24812 Argent Silver Dupont Flex				
U.S. FMVSS Certification				
CHASSIS UPFIT				
Chassis Steps - Factory Standard Steps With Aluminum Tread Plate Trim	1		x	

11 Sperti Drive, Edgewood, KY 41017
(859)331-0360
FAX: (859)331-0399

Fire Apparatus and Custom Fabricators

DESCRIPTION	QTY	PRICE	STD. OPT	INCLUDED OPT.
BROMLEY PUMPER		$223,200.00		
Grab Handles, Cab - Provided By Chassis Manufacturer	1		x	
Exhaust Pipe - Right hand Ahead Of Rear Axle	1		x	
Rear Tow Eyes - Painted Steel (Under Tailboard)	2		x	
Vehicle Data Recorder - Weldon	1		x	
Seatbelt Warning System - Weldon	1		x	
Wheels - Unfinshed (Factory Color)	1		x	
Wheel Trim - Delete	1		x	
Tire Pressure Monitoring System - Valve Stem Indicators	6		x	
Rear Mud Flaps	2		x	
Fluid Identifcation Plate	1		x	
Fuel Type Label - Diesel	1		x	
Seating Label - Maximum Seating Of 2	1		x	
Vehicle Height Label	1		x	
Seatbelt Warning Label	1		x	
Riding On Step Warning Label - Rear of Body	1		x	
Helmet In Cab Warning Label	1		x	
NFPA Helmet Storage - Department To Store In Body	1		x	
BODY - Rescue Style Pumper (Low Head Rail)				
Body Construction - Combination Formed Sheet / Extruded	1		x	
Body Subframe - Aluminum Extruded	1		x	
Material - 190" and .160" 5052 Aluminum	1		x	
Body Mounting	1		x	
Polymer Isolation Strips - Chassis Frame	2		x	
Construction - All Aluminum	1		x	
Body Dimensions - 166" Long, 86" High, 96" Wide	1		x	
Compartment Interiors - Unfinished Aluminum	1		x	
Compartment Floors - Raised Sweep-out Type	1		x	
Rear Drop For Tailboard - Steel	1		x	
Rear Tail Board - 8 inch NFPA Aluminum Treadplate	1		x	
RubRails - Aluminum Extruded	1			x
Fenderettes - Polised Stainless Steel	2		x	
Wheel Well Liners - Full Removable Poly Liners	2		x	
Corrosion Protection Pkg - Anti Corrosion Compound and Nylon Spacers on All Fasteners	1		x	
Hose Bed - Aluminum Extruded Floor	1		x	
Hose Bed Step - Integrated Body Step To Access Hose Bed Floor	1		x	
COMPARTMENTATION				
7-Bay With Rear Compartment Partially Transverse	1		x	

11 Sperti Drive, Edgewood, KY 41017
(859)331-0360
FAX: (859)331-0399

Fire Apparatus and Custom Fabricators

DESCRIPTION	QTY	PRICE	STD. OPT	INCLUDED OPT.
BROMLEY PUMPER		$223,200.00		
L1 Compartment Dimensions - 47" Wide x 72" High x 25" Deep	1		x	
L1 Adjustable Shelf Hard ware - P100 Aluminum Unistrut	4			x
L2 Compartment Dimensions - 60" Wide x 38" High x 25" Deep	1		x	
L2 Adjustable Shelf Hard ware - P100 Aluminum Unistrut	4			x
L3 Compartment Dimensions - 47" Wide x 72" High x 25" Deep	1		x	
L3 Adjustable Shelf Hard ware - P100 Aluminum Unistrut	4			x
R1 Compartment Dimensions - 47" Wide x 72" High x 25" Deep	1		x	
R1 Adjustable Shelf Hard ware - P100 Aluminum Unistrut	4			x
R2 Compartment Dimensions - 44" Wide x 38" High x 25" Deep	1		x	
R2 Adjustable Shelf Hard ware - P100 Aluminum Unistrut	4			x
R3 Compartment Dimensions - 47" Wide x 72" High x 25" Deep	1		x	
R3 Adjustable Shelf Hard ware - P100 Aluminum Unistrut	4			x
Rear Compartment Dimensions - 44" Wide x 48" High x 23" Deep	1		x	
Adjustable Shelf Hardware, Rear Compartment- Delete	1		x	
Compartment Doors - ROM Roll Up Doors	7			x
Door Finish - Brushed	1		x	
Top Seal - Drip Rail With Wiper	7		x	
Internal Drip Pans - Delete	1		x	
Door Locks - Delete	1		x	
BODY UPFIT				
Rear Hosebed Access Steps - Cast Aluminum Fixed	4			x
Grab Rails - Two (2) Vertical, One Each Side Of Rear Compartment	2		x	
Grab rails - Two (2) Horizontal, One in Hose Bed Step Area And One Below Step	2		x	
Folding Steps - Two (2) Front of Body Aid in Accesing Dunnage Area	2			x
Electric Over Hydraulic Ladder Rack - Zico Quic Lift Over Head	1		x	
Accommodation For Extension, Roof, And Folding Ladders On Rack	1		x	
Accommodation For Hard Suction	1			x
SCBA Spare Bottle Storage - Four (4) Single Bottle With Cast Door Housings	4			x
PUMP				
Pump - Hale 1250 GPM	1			x
Gearbox - In Cab Pneumatic Shift	1		x	
Priming Pump - Oil-less	1		x	
Auxillary Cooler - Pump/Engine Circulator	1		x	

Fire Apparatus and Custom Fabricators

DESCRIPTION	QTY	PRICE	STD. OPT	INCLUDED OPT.
BROMLEY PUMPER		$223,200.00		
Plumbing - Stainless Steel & High Pressure Hose	1		x	
Valves - Hale Quarter Turn Stainless Steel	1		x	
Steamer Inlets - 6"	2		x	
Left Auxillary Intake - (1) 2.5" Aux Intake	1		x	
Pump Cooler - Automatic Thermal Relief Valve	1		x	
Master Drain - Below Pumper Operators Panel	1		x	
Intake Relief Valve - Pressure Relief Valve	1		x	
Drains - Quarter Turn Valves	6		x	
Pump Module - 72" Self-Supported Structure Independent of Body w/ Dunnage Area &	1		x	
Pump Module Construction - Aluminum Extruded Constriction	1		x	
Dunnage Storage Area - Open Aluminum	1		x	
Pump House Running Boards - Aluminum NFPA Treadplate	2		x	
Hose Well In Running Boards - Delete	1		x	
Grab Handles - Two (2) Mounted to Module, One On Each Side	2		x	
Pump Panels - Stainless Steel	2		x	
Valve Controls - Twist Lock Push Pull	11		x	
Pressure Gauges - Class One Line Gauges	8		x	
Master Gauges - 3.5" Class 1 Gauges	2		x	
Pressure Governor - Class 1 Total Pressure Governor Plus	1		x	
Water Level Gauge - Class One 1 ITL	1		x	
U.L. Test Ports	1		x	
Labels - All Intakes, Discharges, Drains & Gauges NFPA Labeled & Color Coded	1		x	
Tank To Pump Valve - 3" 1/4 Turn Ball Valve	1		x	
Tank Fill Valve - 1.5" 1/4 Turn Ball Valve	1		x	
2.5" Left Discharges - Two (2) 1/4 Turn Ball Valve	2		x	
2.5" Right Discharges - Two (2) 1/4 Turn Ball Valve	2		x	
2.5" Rear Discharge - One (1) Right Hand	1		x	
Deluge Discharge - 3" 1/4 Turn Ball Valve	1			x
Deluge Monitor - Delete (Capped)	1		x	
Crosslays- (2) 1.75" - Above Pump Module	2		x	
Crosslay Hose Security - Nylon Webbing With Velcro Fastening Left & Right Side	2		x	
Pump Compartment Light - (1) Teqniq LED	1		x	
Foam System - Delete	1		x	
Foam Discharges - Not Applicable	1		x	
TANK				
Booster Tank - UPF Poly 1000	1		x	

11 Sperti Drive, Edgewood, KY 41017
(859)331-0360
FAX: (859)331-0399

SUMMIT
Fire Apparatus and Custom Fabricators

DESCRIPTION	QTY	PRICE	STD. OPT	INCLUDED OPT.
BROMLEY PUMPER		$223,200.00		
ISO Certification - 9001:2008	1		x	
Construction - Pt3 Polypropylene	1		x	
Closed Curve Baffling	1		x	
Fill Tower W/Cover - Center Mount	1		x	
Vent Overflow - 4 Inch	1		x	
Sump	1		x	
3" Npt Threaded Outlet Bottom Of Sump	1		x	
12 VOLT ELECTRICAL REQUIRMENTS				
12 Volt Elctrical System - Multiplex System	1		x	
Wiring Requirments - NFPA 1901	1		x	
SAE Practices & FMVSS Compliant	1		x	
Wiring - GXL Stranded Copper	1		x	
12V Dc Voltage Output Testing & Documentation	1		x	
Switch Panel - Cab mounted - One Master Switch Warning System	1		x	
Reserve Capacity Test:	1		x	
Alternator Performance Test At Idle:	1		x	
Alternator Performance Test At Full Load:	1		x	
Low Voltage Alarm Test:	1		x	
Documentation - NFPA Test Results	1		x	
Battery Disconnect Switch - Supplied Chassis Manufacturer	1		x	
Battery Light - Green L.E.D. Dash Mounted	1		x	
Clearance / Marker Lights - Tecniq P2 L.E.D	19		x	
License Plate Bracket and Light - Arrow	1		x	
Brake Lights, - Tecniq K60 Red L.E.D.	2		x	
Turn Lights - Tecniq K60 Amber L.E.D.	2		x	
Backup Lights - Tecniq K60 Clear L.E.D.	2		x	
Light Cluster Housing - Chrome	2		x	
Engine Compartment Light - Grote 61491-5 Switched	1		x	
Ground Area Lighting 2 Door Cab - Tecniq L.E.D	2		x	
Ground Area Lighting Body - Tecniq L.E.D	4		x	
Hosebed Light Step - Recessed LED	1		x	
Rear Cargo Area Light - TecNiq LED	7		x	
Compartment Lighting - TecNiq L.E.D Single Dome	1		x	
Compartment Ajar Light - Weldon LED	1		x	
Low Voltage Alarm	1		x	
Battery Charging Receptacle - Polarity Plug For House Charger	1		x	
EMERGENCY WARNING SYSTEMS				

Fire Apparatus and Custom Fabricators

DESCRIPTION	QTY	PRICE	STD. OPT	INCLUDED OPT.
BROMLEY PUMPER		$223,200.00		
Light Bar - Whelen 60" Freedom L.E.D.	1		x	
Blocking Right Away	1		x	
Lower Zone A Warning Lights - Whelen 600 Series L.E.D.	2		x	
Lower Zone A Warning Light Chrome Flange - Whelen 6E flange	2		x	
Lower Zone B&D Intersection Lights - Whelen 600 Series L.E.D	2		x	
Lower Zone B&D Intersection Light Chrome Flange - Whelen 6E flange	2		x	
Lower Zone B&D Rear Warning Lights - Whelen 600 Series L.E.D.	2		x	
Lower Zone B&D Rear Warning Light Chrome Flange - Whelen 6Eflange	2		x	
Lower Zone C Warning Lights - Whelen 600 Series L.E.D.	2		x	
Upper Zone C Warning Lights - L31HRFN Series LED Beacons	2		x	
Electronic Siren - Whelen 295SLSA1	1		x	
Siren Speaker - Code 3 PB100B	1		x	
PAINTING AND STRIPING				
Undercoating - Delete	1		x	
PPG Two Stage Urethane - Body Job Color	1		x	
NFPA Perimeter - 4" White Reflective Cab	1		x	
NFPA Perimeter - 4" White Reflective Body	1		x	
NFPA Chevron 6' Red/Amber Reflective - Body Only (No Rear Door)	1		x	
WARRANTIES				
Limited Warranty (1-Year)	1		x	
Paint Warranty (7-Year)	1		x	
Electrical Warranty (10-Year)	1		x	
Body Structural Warranty (20-Year)	1		x	
SUMMIT PUMPER OPTIONS				
CHASSIS OPTIONS:				
4 Door Cab In Lieu Of The 2 Door Cab With Air Ride Drivers and Three		$9,600.00		
Detroit Da-F-12.0-3 12,000# Ff1 71.5 Kpi/3.74 Drop Single Front Axle		($462.00)		
Detroit Da-F-16.0-5 16,000# Fl1 71.0 Kpi/3.74 Drop Single Front Axle		$739.20		
Detroit Da-F-18.0-5 18,000# Fl1 71.0 Kpi/3.74 Drop Single Front Axle		$855.60		
Rs-23-161 24,000# R-Series Fire/Emergency Service Single Rear Axle		($1,700.00)		

11 Sperti Drive, Edgewood, KY 41017
(859)331-0360
FAX: (859)331-0399

Fire Apparatus and Custom Fabricators

DESCRIPTION	QTY	PRICE	STD. OPT	INCLUDED OPT.
BROMLEY PUMPER		$223,200.00		
Rs-30-185 31,000# U-Series Fire/Emergency Service Single Rear Axle		$1,764.00		
Dual West Coast Molded-In Color Heated Mirrors		$94.80		
Dual West Coast Bright Finish Heated Mirrors		$122.40		
Dual West Coast Bright Finish Mirrors		$98.40		
Dual West Coast Bright Finish Heated Mirrors With Lh And Rh Remote		$252.00		
Cum ISL 300 Hp @ 2000 Rpm, 2200 Gov Rpm, 860 Lb/Ft @ 1300 Rpm		($985.20)		
Cum ISL 350 Hp @ 2000 Rpm, 2200 Gov Rpm, 1000 Lb/Ft @ 1400 Rpm		$264.00		
Alcoa Lvl One 88367X 22.5X8.25 10-Hub Pilot 5.79 Inset Aluminum Disc Front Wheels		$260.40		
Alcoa Lvl One 88367X 22.5X8.25 10-Hub Pilot Aluminum Disc Rear Wheels		$458.40		
Polished Front And Rear Wheels; Outside Of Outer Wheels Only		$130.80		
LH And RH Electric Powered Windows		$139.20		
LH And RH Electric Door Locks		$93.60		
Hood Mounted Chromed Plastic Grille		$78.00		
Chrome Hood Mounted Air Intake Grille		$38.40		
Three-Piece 14 Inch Chromed Steel Bumper With Collapsible Ends		$182.40		
Seats Inc 911 2 Man Mid Back Non Suspension Passenger Seat With Nfpa 2009 Compliant Seat Sensors		$817.20		
Seats Inc 911 Universal Series High Back Non Suspension Passenger Seat With Underseat Storage And Nfpa 1901-2009 Compliant Seat Sensor		($156.00)		
(1) Dash Mounted Pto Switch With Indicator Lamp For Customer Installed Pto		$93.60		
Stationary Painted Full Grille For Chassis Without Integral Front Frame Extensions		$254.40		
Power And Ground Wiring Provision For Cb		$18.00		
Roof/Overhead Console Cb Radio Provision With Face Plate		$68.40		
Two On/Off Rocker Switches In The Dash With Indicator Lights And Wire Routed To Chassis At Back Of Cab, Label Opt		$62.40		
Four On/Off Rocker Switches In The Dash With Indicator Lights And Wire Routed To Chassis At Back Of Cab, Label Opt		$106.80		
Customer Furnished Din Radio Package		$91.20		
Am/Fm/Wb Radio With Front Auxiliary Input		$205.20		
Synthetic 75W-90 Front Axle Lube		$12.00		

SUMMIT
Fire Apparatus and Custom Fabricators

DESCRIPTION	QTY	PRICE	STD. OPT	INCLUDED OPT.
BROMLEY PUMPER		$223,200.00		
Synthetic 75W-90 Rear Axle Lube		$58.80		
Adjustable Tilt And Telescoping Steering Column		$326.40		
Preco 1040 87 Db To 112 Db Automatic Self-Adjusting Backup Alarm		$34.80		
RH Down View Mirror		$24.00		
CHASSIS UPFIT OPTIONS:				
Treadplate Vertical Fill Panels Using Existing Cab Steps		$520.00		
Punch Raised treadplate Full Cab Steps (2 Door)		$1,790.00		
Punch Raised treadplate Full Cab Steps (4 Door)		$1,800.00		
Front Bumper Extension 8" With Gravel Shield		$1,850.00		
Front Bumper Extension 18-24" With Gravel Shield		$3,700.00		
Front Bumper Extension Hose Well (No Discharge Provided) Requires 18-24" extension)		$550.00		
Vinyl Hose Tray Cover For Bumper Hose Tray		$150.00		
Treadplate Cover For Bumper Hose Tray With Latch		$295.00		
Center Console for radio & siren - Treadplate Aluminum (No Storage)		$895.00		
Center Consolefor radio & siren - Smooth Aluminum (No Storage)		$785.00		
Book / Binder Misc Storage for console		$400.00		
Rubberized coating for console		$260.00		
Raised or Angled switch panel on console		$115.00		
Trailer Hitch - 2" Class 4 receiver (includes 4 way plug)		$990.00		
Seven way trailer plug in lieu of 4 way		$70.00		
Stainless Steel Wheel Simulators		$890.00		
Air Horns - Hood Mounted		$814.00		
Air Horns - Bumper Mounted (Need Bumper Extension)		$960.00		
Automatic Tire Chains - Rudd		$2,981.00		
Automatic Tire Chains - On Spot		$2,705.00		
Lighted Bumper Poles (Rookie Rods)		$325.00		
BODY OPTIONS:				
Swing Doors In lieu of the ROM Roll Up Doors.		$525.00		
Rub Rails with Conspicuity Stripe		$670.00		
Hard Suction Storage Troughs - Top Road Side Compartments (Cant		$850.00		
Hard Suction Storage Compartment In Hose Bed With Access Door		$1,100.00		
Dual Bottle SCBA Storage In Lieu of Single (Pending on location; Pricing is each)		$150.00		
Hansen Roll Up Doors in Lieu Of ROM		($490.00)		

11 Sperti Drive, Edgewood, KY 41017
(859)331-0360
FAX: (859)331-0399

SUMMIT
Fire Apparatus and Custom Fabricators

DESCRIPTION	QTY	PRICE	STD. OPT	INCLUDED OPT.
BROMLEY PUMPER		$223,200.00		
Folding Steps on Front Of Body (Pair)		$245.00		
Protective TreadPlate Overlay On Front of Compartments		$375.00		
STORAGE OPTIONS:				
Tail Board Mounted "Doughnut" Hose Holder		$695.00		
Adjustable Trays (each)		$200.00		
Adjustable Slide Trays - 300 lb (each)		$555.00		
HD Slide Tray - 600 lb (each)		$650.00		
Plastic Floor Tile compartment floors		$118.00		
Plastic Floor Tile installed on shelf / Tray (each)		$75.00		
Hose Bed Cover - Vinyl Cover		$925.00		
Plastic Floor Tile compartment floors		$118.00		
Plastic Floor Tile installed on 24" shelf / Tray (each)		$75.00		
TANK OPTIONS:				
750 Gallon Tank In Lieu of 1000 Gallon Tank		($800.00)		
Fiberglass 1000 Gallon Tank In Lieu of Poly Tank		$550.00		
Fiberglass 750 Gallon Tank In Lieu of 1000 Gallon Poly Tank		N/C		
PUMPS & PLUMBING:				
1.5" Trash Line Run to Front Bumper (Must Select Bumper Extension)		$1,100.00		
LDH Discharge on Right Side Pump Panel		$1,900.00		
Right Side 2.5"Suction		$1,325.00		
Hose Well In Pump House Running Board - Includes Velcro Strap		$750.00		
Foam Pro 1600 Includes Foam Cell In Tank (X-Lays Only)		$6,320.00		
Foam Pro 2001 - Single Foam System, Includes Foam Cell In Tank (X-		$7,900.00		
Foam Pro 2001 - Dual Foam System, Includes Foam Cell In Tank (X-		$9,800.00		
Foam Pro 2024 - Single Foam System, Includes Foam Cell In Tank (X-Lays,Trash, One 2-1/2")		$9,720.00		
Foam Pro 2024 - Dual Foam System, Includes Foam Cell In Tank (X-Lays,Trash, One 2-1/2")		$11,160.00		
Foam Pro Uplift System - Single		$2,350.00		
Foam Pro Uplift System - Dual		$4,580.00		
ELECTRIC:				
Kussmaul Battery Conditioner with Auto Eject In Lieu of Polarity Plug		$995.00		
Kussmaul Pump Plus, Battery Conditioner with Auto Eject In Lieu of Polarity Plug		$1,760.00		

SUMMIT
Fire Apparatus and Custom Fabricators

DESCRIPTION	QTY	PRICE	STD. OPT	INCLUDED OPT.
BROMLEY PUMPER		$223,200.00		
Auto Air Eject For House Air Supply		$445.00		
Swing Door Interlock For Hydraulic Laddr Rack		$290.00		
Whelen 900 Series LED In Upper Zones B&D and C in lieu of Beacons		$420.00		
Single Strip LED Strip Compartment Lighting in lieu single LED		$750.00		
Dual Strip LED Strip Compartment Lighting in lieu single LED		$1,620.00		
LED Ground lights under front of body		$240.00		
LED Ground light under front bumper		$180.00		
Cab Brow Light - Single (Center) Over Cab - Whelen PFP2 Pioneer 16000 Lumen, L.E.D, 12 Volt		$2,103.00		
Cab Brow Light - Single (Center) Over Cab - FRC FCA800-V08 8,000 Lumen, L.E.D, 12 Volt		$1,555.00		
Cab Brow Light - Single (Center) Over Cab - FRC FCA800-V15 15,000 Lumen, L.E.D, 12 Volt		$1,686.00		
Cab Brow Light - Single (Center) Over Cab - FRC SPA800-Q15 15,000 Lumen, L.E.D, 12 Volt		$1,899.00		
Cab Brow Light - Single (Center) Over Cab - FRC SPA800-Q20 20,000 Lumen, L.E.D, 12 Volt		$2,093.00		
LED FRC Spectra 900Scene lighting - Two (2) on Upper Rear		$970.00		
120/240 VOLT ELECTRICAL OPTIONS				
5000 W Gasoline Powered Honda Generator - Mounted on slide tray (Elec Start)		$4,200.00		
5000 W Gasoline Powered Generator - Mounted on slide tray (Elec Start)		$2,800.00		
3000 W Baldor Diesel Generator Mounted on slide tray (Elec Start)		$4,200.00		
5500 W Baldor Diesel Generator Mounted on slide tray (Elec Start)		$5,450.00		
120/240 Volt load center with up to 4 breakers & pigtail for genertaor (Gas or Diesel Generators Only)		$750.00		
Fuel Tap from chassis (Diesel)		$610.00		
6 KW Smart Power Hydraulic Generator With Load Center		$11,828.00		
8 KW Smart Power Hydraulic Generator With Load Center		$14,923.00		
10KW Smart Power Hydraulic Generator With Load Center		$15,972.00		
15KW Smart Power Hydraulic Generator With Load Center		$20,321.00		
20KW Smart Power Hydraulic Generator With Load Center		$22,206.00		
Remote Generator Activation From Pump Panel		$250.00		
Exterior Receptacles - Covered Duplex 5-20		$285.00		
Interior 120 Volt Receptacles - Cab, Duplex 5-15		$320.00		
Interior 120 Volt Receptacles - Body Compartrment, Duplex 5-15		$250.00		
220 Volt Receptacle - Body Compartment		$295.00		

SUMMIT
Fire Apparatus and Custom Fabricators

DESCRIPTION	QTY	PRICE	STD. OPT	INCLUDED OPT.
BROMLEY PUMPER		$223,200.00		
Electric Cord Reel - 200' 10/3 Black Cable		$2,180.00		
Electric Cord - 200' 10/3 Yellow Cord In Lieu Of The Black		$180.00		
Electric Cord Ball Stop		$25.00		
Electric Junction Box - Akron With 4 L5-20 Receptacles		$425.00		
Electric Junction Box - Circle D With 4 L5-20 Receptacles		$545.00		
Fair Lead, Cord Reel - Hannay 4 Way		$180.00		
Sumit Extendible or Swing Out Fair Lead		$340.00		
Junction Box Mounting Bracket - Aluminum		$150.00		
Side Mount Push-Up Lights - Akron ELNB-750-Pod 120Volt, 750 Watt Lights (Per Pair)		$1,665.00		
Side Mount Push Up Lights - FRC FCA530-S75 120 Volt 750 Watt Lights (Per Pair)		$1,632.00		
Side Mount Push Up Lights - FRC FCA530-M10 1000 Watt Lights (Per Pair)		$1,745.00		
Side Mount Push Up Lights - FRC FCA530-M12 240 Volt, 1000 Watt Lights (Per Pair)		$1,832.00		
Side Mount Push Up Lights - FRC OPA530-S75 120 Volt 750 Watt Lights (Per Pair)		$1,685.00		
Side Mount Push Up Lights - FRC OPA530-M10 1000 Watt Lights (Per Pair)		$1,847.00		
Side Mount Push Up Lights - FRC OPA530-M12 240 Volt, 1000 Watt Lights (Per Pair)		$1,910.00		
PAINT:				
Two Tone Chassis - Two Door		$2,810.00		
Two Tone Chassis - Four Door		$3,210.00		
Painting Jambs and under hood in addition to paint (2 Door)		$600.00		
Painting Jambs and under hood in addition to paint (4 Door)		$1,200.00		
Two Tone Body		$2,550.00		
Body Undercoating		$415.00		
Painted Steel Wheels to Job Color		$460.00		
STRIPING & LETTERING:				
NFPA Perimeter Stripe 4"		$642.00		
1- 4 -1 NFPA Perimeter Stripe 4" with 1" stripe above and below		$792.00		
Z pattern in stripe		$130.00		
Sixty (60) 3" Reflective Lettering		$705.00		

11 Sperti Drive, Edgewood, KY 41017
(859)331-0360
FAX: (859)331-0399

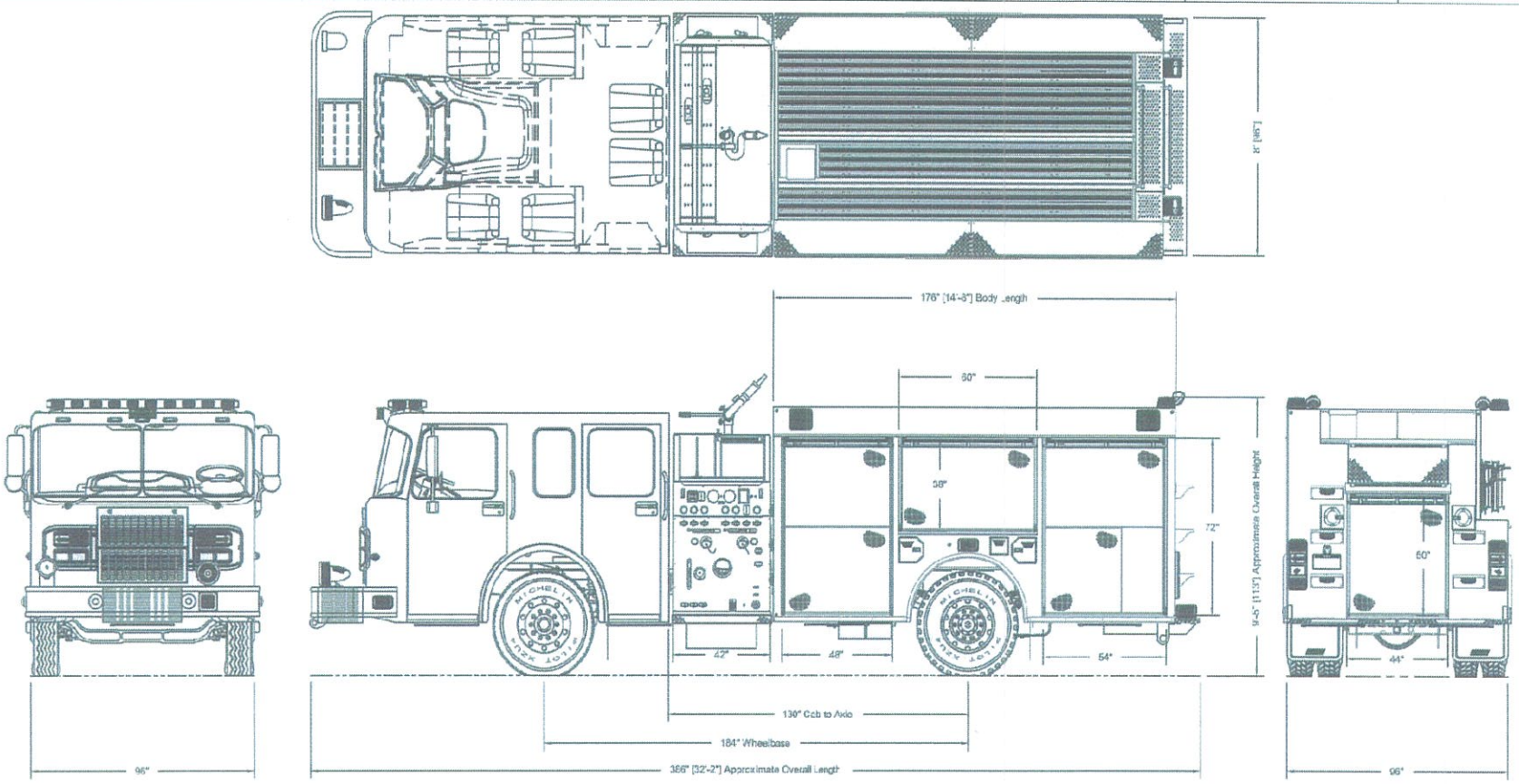

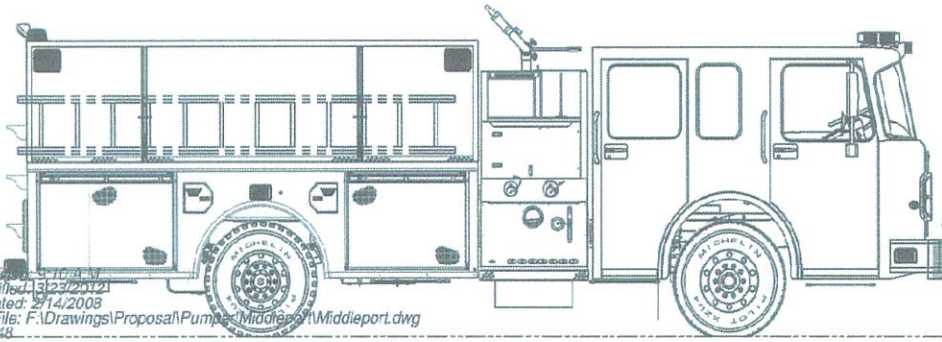

Time Modified: 3:10:41 M
Date Modified: 3/23/2012
Date Created: 2/14/2008
Drawing File: F:\Drawings\Proposal\Pumper\Middleport\Middleport.dwg
Scale: 1=48

The information contained on this drawing is the property of Summit Welding and Fabricating Inc.. The use, disclosure or reproduction of this information without the prior written permission of Summit Welding and Fabricating Inc. is prohibited. This drawing is for bid or proposal purposes only and may not reflect the final unit!

SUMMIT

Fire Apparatus and Custom Fabricators
11 Sperti Dr. Edgewood, Ky. 41017

SCALE: 1/ 4"=1'-0"	APPROVED BY:	DRAWN BY: RSC
DATE: 03/22/12		JOB# Middl

Middleport F.D.

Pumper Unit

DRAWING NUMBER
Middleport

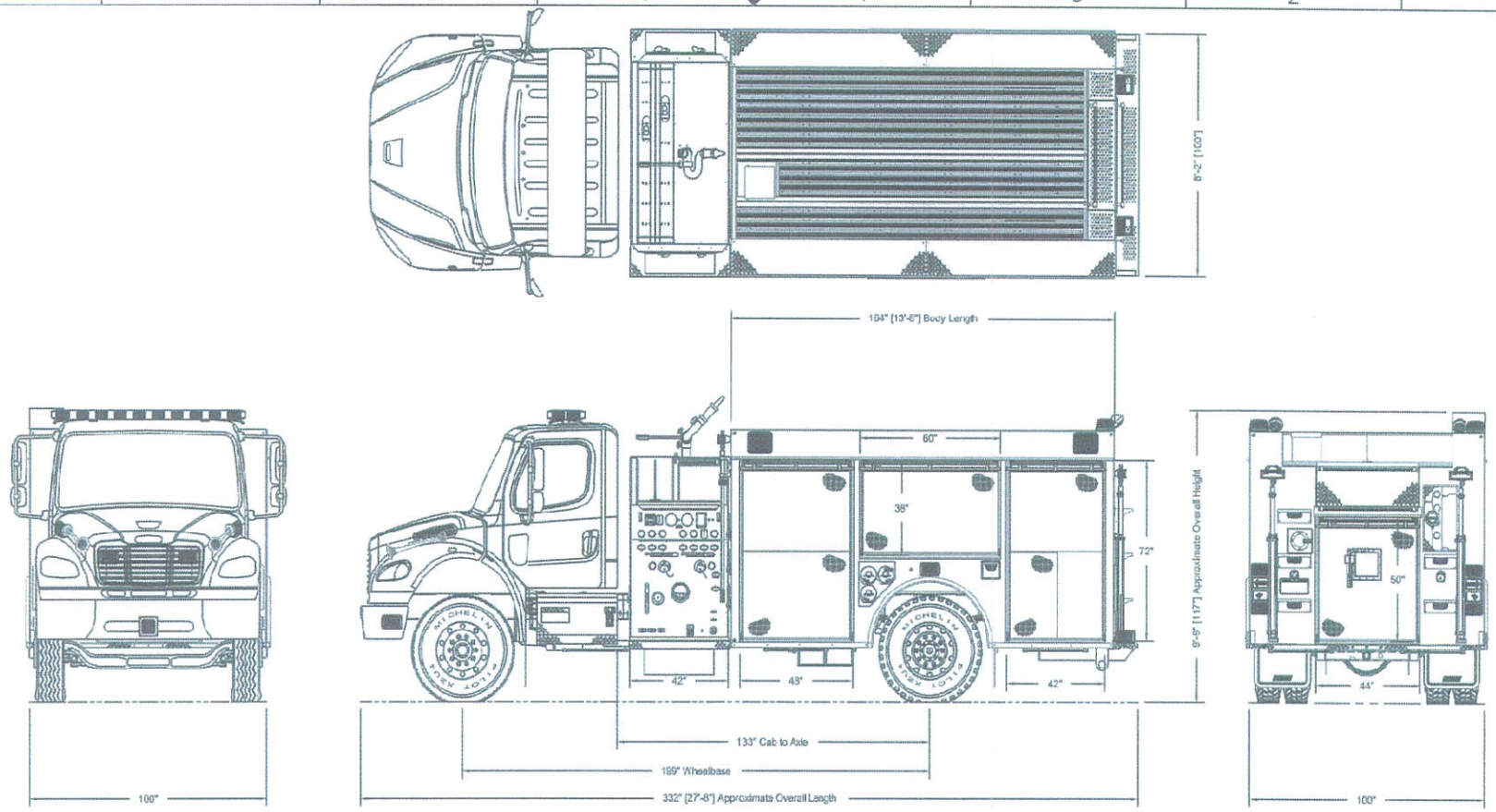

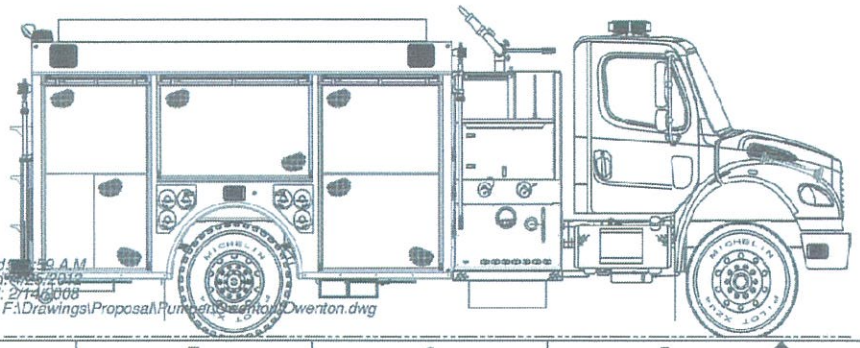

Time Modified: [illegible] A.M.
Date Modified: [illegible]
Date Created: 2/14/2008
Drawing File: F:\Drawings\Proposal\Pumper\[illegible]\Owenton.dwg
Scale: 1=48

The information contained on this drawing is the property of Summit Welding and Fabricating Inc.. The use, disclosure or reproduction of this information without the prior written permission of Summit Welding and Fabricating Inc., is prohibited. This drawing is for bid or proposal purposes only and may not reflect the final unit!

SUMMIT

Fire Apparatus and Custom Fabricators
11 Sperti Dr. Edgewood, Ky. 41017

SCALE: 1/ 4"=1'-0"	APPROVED BY:	DRAWN BY: RSC
DATE: 04/25/12		JOB# Owent

Owenton F.D.

Pumper Unit

DRAWING NUMBER
Owenton

SUMMIT
Fire Apparatus and Custom Fabricators

DESCRIPTION	QTY	PRICE	STD.	INCLUDED OPT.
COMMERCIAL CAB HIGHSIDE / LOWSIDE PUMPER		$320,500.00		
CHASSIS				
Freigtliner M2 106 Conventional Chassis	1			
2015 Model Year Specified				
Set Back Axle - Truck				
Straight Truck Provision				
LH Primary Steering Location				
Domiciled, Usa 50 States (Including California And Carb Opt-In States)				
Fire Service Vocation				
Emergency Vehicles Business Segment				
Liquid Bulk Commodity				
Terrain/Duty: 100% (All) Of The Time, In Transit, Is Spent On Paved Roads				
Maximum 8% Expected Grade				
Smooth Concrete Or Asphalt Pavement - Most Severe In-Transit (Between Sites) Road Surface				
Medium Truck Warranty				
Expected Front Axle(S) Load : 14000.0 Lbs				
Expected Rear Drive Axle(S) Load : 26000.0 Lbs				
Expected Gross Vehicle Weight Capacity : 40000.0 Lbs				
Fire Tank - No Main Driveline Driven Split-Shaft PTO /Pump				
Expected Truck Body Length : 14.0 Ft				
Expected Body/Payload Cg Height Above Frame "Xx" Inches : 32.0 In				
Cum Isl 330 Hp @ 2000 Rpm, 2200 Gov Rpm, 1000 Lb/Ft @ 1400 Rpm				
60 Mph Road Speed Limit				
Cruise Control Speed Limit Same As Road Speed Limit				
PTO Mode Engine Rpm Limit - 1100 Rpm				
PTO Rpm With Cruise Set Switch - 700 Rpm				
PTO Rpm With Cruise Resume Switch - 800 Rpm				
PTO Mode Cancel Vehicle Speed - 5 Mph				
PTO Governor Ramp Rate - 250 Rpm Per Second				
PTO Minimum Rpm - 700				
Regen Inhibit Speed Threshold - 5 Mph				
2013 Onboard Diagnostics/2010 Epa/Carb/Ghg14				
2008 Carb Emission Certification - Exempted Vehicle; No Clean Idle Label Required				
Standard Oil Pan				
Engine Mounted Oil Check And Fill				
One Piece Valve Cover				
Side Of Hood Air Intake With Nfpa Compliant Ember Screen And				

Fire Apparatus and Custom Fabricators

DESCRIPTION	QTY	PRICE	STD.	INCLUDED OPT.
COMMERCIAL CAB HIGHSIDE / LOWSIDE PUMPER		$320,500.00		
Dr 12V 275 Amp 40-Si Brushless Pad Alternator With Remote Battery Voltage Sense				
(2) Alliance Model 1131, Group 31, 12 Volt Maintenance Free 2250 Cca Threaded Stud Batteries				
Battery Box Frame Mounted				
Standard Battery Jumpers				
Single Battery Box Frame Mounted LH Side Under Cab				
Wire Ground Return For Battery Cables With Additional Frame Ground Return				
Non-Polished Battery Box Cover				
Positive Load Disconnect With Cab Mounted Control Switch Mounted Outboard Driver Seat				
Positive And Negative Posts For Jumpstart Located On Frame Next To Starter				
Cummins Turbocharged 18.7 Cfm Air Compressor With Internal Safety Valve				
Standard Air Compressor Governor				
Air Compressor Discharge Line				
Gvg, Fire And Emergency Service Vehicles Engine Warning				
Cummins Exhaust Brake Integral With Variable Geometry Turbo With On/Off Dash Switch				
RH Outboard Under Step Mounted Horizontal Aftertreatment System Assembly With RH Horizontal Tailpipe				
Engine Aftertreatment Device, Automatic Over The Road Regeneration And Dash Mounted Regeneration Request Switch				
Standard Exhaust System Length				
RH Standard Horizontal Tailpipe				
6 Gallon Diesel Exhaust Fluid Tank				
100 Percent Diesel Exhaust Fluid Fill				
LH Medium Duty Standard Diesel Exhaust Fluid Tank Location				
Standard Diesel Exhaust Fluid Pump Mounting				
Standard Diesel Exhaust Fluid Tank Cap				
Horton Drivemaster On/Off Fan Drive				
Automatic Fan Control With Dash Switch And Indicator Light, Non Engine Mounted				
Cummins Spin On Fuel Filter				
Combination Full Flow/Bypass Oil Filter				
1100 Square Inch Aluminum Radiator				
Antifreeze To -34F, Noat Extended Life Coolant				
Gates Blue Stripe Coolant Hoses Or Equivalent				
Constant Tension Hose Clamps For Coolant Hoses				
Radiator Drain Valve				
Lower Radiator Guard				

SUMMIT
Fire Apparatus and Custom Fabricators

DESCRIPTION	QTY	PRICE	STD.	INCLUDED OPT.
COMMERCIAL CAB HIGHSIDE / LOWSIDE PUMPER		$320,500.00		
Aluminum Flywheel Housing				
Electric Grid Air Intake Warmer				
Delco 12V 38Mt Hd Starter With Integrated Magnetic Switch				
Allison 3000 Evs Automatic Transmission With PTO Provision				
Allison Vocational Package 198 - Available On 3000/4000 Product Families With Vocational Model Evs				
Allison Vocational Rating For Fire Truck/Emergency Vehicle Applications Available With All Product Families				
Primary Mode Gears, Lowest Gear 1, Start Gear 1, Highest Gear 5, Available For 3000/4000 Product Families Only				
Secondary Mode Gears, Lowest Gear 1, Start Gear 1, Highest Gear 5, Available For 3000/4000 Product Families Only				
Vehicle Interface Wiring With Body Builder Connector Mounted Back Of Cab				
Electronic Transmission Customer Access Connector Mounted Back Of Cab				
Magnetic Plugs, Engine Drain, Transmission Drain, Axle(S) Fill And Drain				
Push Button Electronic Shift Control, Dash Mounted				
Transmission Prognostics - Enabled 2013				
Water To Oil Transmission Cooler, In Radiator End Tank				
Transmission Oil Check And Fill With Electronic Oil Level Check				
Synthetic Transmission Fluid (Tes-295 Compliant)				
Detroit Da-F-14.7-3 14,700# Ff1 71.5 Kpi/3.74 Drop Single Front Axle				
Bendix 16.5X6D Es Cast Spider Cam Front Brakes, Single Anchor, Fabricated Shoes				
Fire And Emergency Severe Service, Non-Asbestos Front Lining				
Conmet Cast Iron Front Brake Drums				
Skf Scotseal Plus Xl Front Oil Seals				
Vented Front Hub Caps With Window, Center And Side Plugs - Oil				
Standard Spindle Nuts For All Axles				
Bendix Versajust Automatic Front Slack Adjusters				
Trw Tas-85 Power Steering				
Power Steering Pump				
2 Quart See Through Power Steering Reservoir				
Organic Sae 80/90 Front Axle Lube				
14,600# Taperleaf Front Suspension				
Maintenance Free Rubber Bushings - Front Suspension				
Front Shock Absorbers				

Fire Apparatus and Custom Fabricators

DESCRIPTION	QTY	PRICE	STD.	INCLUDED OPT.
COMMERCIAL CAB HIGHSIDE / LOWSIDE PUMPER		$320,500.00		
Rs-25-160 27,000# R-Series Fire/Emergency Service Single Rear Axle				
5.63 Rear Axle Ratio				
Iron Rear Axle Carrier With Standard Axle Housing				
Mxl 17N Meritor Extended Lube Main Driveline With Full Round Yokes				
Meritor 16.5X7 P Cam Rear Brakes, Double Anchor, Cast Shoes				
Fire And Emergency Severe Service Non-Asbestos Rear Brake Lining				
Brake Cams And Chambers On Rear Side Of Drive Axle(S)				
Webb Heavy Weight Cast Iron Rear Brake Drums				
Skf Scotseal Plus Xl Rear Oil Seals				
Haldex Goldseal Longstroke 1-Drive Axle Spring Parking Chambers				
Bendix Versajust Automatic Rear Slack Adjusters				
Organic Sae 80/90 Rear Axle Lube				
27,000# Flat Leaf Spring Rear Suspension With Helper And Radius Rod For Fire/Emergency Service				
Spring Suspension - No Axle Spacers				
Standard U-Bolt Pad				
Fore/Aft Control Rods				
Air Brake Package				
Wabco 4S/4M Abs With Traction Control				
Reinforced Nylon, Fabric Braid And Wire Braid Chassis Air Lines				
Fiber Braid Parking Brake Hose				
Standard Brake System Valves				
Standard Air System Pressure Protection System				
Std U.S. Front Brake Valve				
Relay Valve With 5-8 Psi Crack Pressure, No Rear Proportioning Valve				
No Brake Line Air Dryer				
Steel Air Brake Reservoirs				
Pull Cable On Wet Tank, Petcock Drain Valves On All Other Air Tanks				
Upgraded Chassis Multiplexing Unit				
Upgraded Bulkhead Multiplexing Unit				
4425Mm (174 Inch) Wheelbase				
11/32X3-1/2X10-3/16 Inch Steel Frame (8.73Mmx258.8Mm/0.344X10.19 Inch) 120Ksi				
1600Mm (63 Inch) Rear Frame Overhang				
Frame Overhang Range: 61 Inch To 70 Inch				
Calc'D Back Of Cab To Rear Susp C/L (Ca) : 108.45 In				

SUMMIT
Fire Apparatus and Custom Fabricators

DESCRIPTION	QTY	PRICE	STD.	INCLUDED OPT.
COMMERCIAL CAB HIGHSIDE / LOWSIDE PUMPER		$320,500.00		
Calculated Effective Back Of Cab To Rear Suspension C/L (Ca) : 105.45 In				
Calc'D Frame Length - Overall : 266.39				
Calc'D Space Available For Deckplate : 108.45 In				
Calculated Frame Space LH Side : 80.57 In				
Calculated Frame Space RH Side : 117.31 In				
Square End Of Frame				
Front Closing Crossmember				
Standard Weight Engine Crossmember				
Standard Midship #1 Crossmember(S)				
Standard Rearmost Crossmember				
Standard Suspension Crossmember				
Three-Piece 14 Inch Painted Steel Bumper With Collapsible Ends				
Front Tow Hooks - Frame Mounted				
Bumper Mounting For Single License Plate				
Fender And Front Of Hood Mounted Front Mudflaps				
Grade 8 Threaded Hex Headed Frame Fasteners				
Tank Body 0 To 1500 Gallons				
50 Gallon/189 Liter Short Rectangular Aluminum Fuel Tank - LH				
Rectangular Fuel Tank(S)				
Plain Aluminum/Painted Steel Fuel/Hydraulic Tank(S) With Painted Bands				
Fuel Tank(S) Forward				
Plain Step Finish				
Fuel Tank Cap(S)				
Alliance Fuel Filter/Water Separator				
Equiflo Inboard Fuel System				
High Temperature Reinforced Nylon Fuel Line				
Goodyear G291 315/80R22.5 18 Ply Radial Front Tires				
Goodyear G291 315/80R22.5 18 Ply Radial Rear Tires				
Conmet Pre-Set Bearing Iron Front Hubs				
Conmet Pre-Set Bearing Iron Rear Hubs				
Maxion Wheels 90260 22.5X8.25 10-Hub Pilot 6.13 Inset 2-Hand Hd Steel Disc Front Wheels				
Accuride 28828 22.5X8.25 10-Hub Pilot 2-Hand Hd Steel Disc Rear Wheels				
Front Wheel Mounting Nuts				
Rear Wheel Mounting Nuts				
106 Inch Bbc Flat Roof Aluminum Conventional Cab				
Air Cab Mounts				
Cab Roof Reinforcements For Roof Mounted Components				
LH And RH Exterior Grab Handles With Single Rubber Insert				

Fire Apparatus and Custom Fabricators

DESCRIPTION	QTY	PRICE	STD.	INCLUDED OPT.
COMMERCIAL CAB HIGHSIDE / LOWSIDE PUMPER		$320,500.00		
Painted Plastic Grille				
Argent Silver Hood Mounted Air Intake Grille				
Fiberglass Hood				
Single Electric Horn				
Door Locks And Ignition Switch Keyed The Same				
Rear License Plate Mount End Of Frame				
Integral Headlight/Marker Assembly				
(5) Amber Marker Lights				
Integral Stop/Tail/Backup Lights				
Standard Front Turn Signal Lamps				
Dual West Coast Bright Finish Heated Mirrors With LH And RH Remote				
Door Mounted Mirrors				
102 Inch Equipment Width				
LH And RH 8 Inch Bright Finish Convex Mirrors Mounted Under Primary Mirrors				
Standard Side/Rear Reflectors				
63X14 Inch Tinted Rear Window				
Tinted Door Glass LH And RH With Tinted Non-Operating Wing Windows				
Manual Door Window Regulators				
Tinted Windshield				
2 Gallon Windshield Washer Reservoir Without Fluid Level Indicator, Frame Mounted				
Opal Gray Cloth Interior				
Molded Plastic Door Panel				
Molded Plastic Door Panel				
Black Mats With Single Insulation				
Forward Roof Mounted Console With Upper Storage Compartments Without Netting				
In Dash Storage Bin				
(2) Cup Holders LH And RH Dash				
Gray/Charcoal Flat Dash				
Smart Switch Expansion Module				
Heater, Defroster And Air Conditioner				
Standard Hvac Ducting				
Main Hvac Controls With Recirculation Switch				
Standard Heater Plumbing				
Denso Heavy Duty Air Conditioner Compressor				
Binary Control, R-134A				
Standard Insulation				
Solid-State Circuit Protection And Fuses				
12V Negative Ground Electrical System				

Fire Apparatus and Custom Fabricators

DESCRIPTION	QTY	PRICE	STD.	INCLUDED OPT.
COMMERCIAL CAB HIGHSIDE / LOWSIDE PUMPER		$320,500.00		
Dome Light With 3-Way Switch Activated By LH And RH Doors				
Cab Door Latches With Manual Door Locks				
Seats Inc 911 Universal Series High Back Air Suspension Driver Seat With Nfpa 1901-2009 Compliant Seat Sensor				
Seats Inc 911 Universal Series High Back Non Suspension Passenger Seat With Underseat Storage And Nfpa 1901-2009 Compliant Seat Sensor				
LH And RH Integral Door Panel Armrests				
Black Cordura Plus Cloth Driver Seat Cover				
Black Cordura Plus Cloth Passenger Seat Cover				
3 Point High Visibility Orange Retractor Driver And RH Front Passenger Seat Belts With Nfpa 1901-2009 Compliant Sensor And Dash Harness				
Fixed Steering Column				
4-Spoke 18 Inch (450Mm) Steering Wheel				
Driver And Passenger Interior Sun Visors				
Gray Driver Instrument Panel				
Gray Center Instrument Panel				
Black Gauge Bezels				
Low Air Pressure Light And Buzzer				
2 Inch Primary And Secondary Air Pressure Gauges				
Intake Mounted Air Restriction Indicator Without Graduations				
97 Db Backup Alarm				
Electronic Cruise Control With Switches In LH Switch Panel				
Key Operated Ignition Switch And Integral Start Position; 4 Position Off/Run/Start/Accessory				
Odometer/Trip/Hour/Diagnostic/Voltage Display: 1X7 Character, 26 Warning Lamps, Data Linked, Icu3				
Diagnostic Interface Connector, 9 Pin, Sae J1939, Located Below Dash				
2 Inch Electric Fuel Gauge				
Programmable Rpm Control - Electronic Engine				
Electrical Engine Coolant Temperature Gauge				
2 Inch Transmission Oil Temperature Gauge				
Engine And Trip Hour Meters Integral Within Driver Display				
Enhanced Stability Control				
Electric Engine Oil Pressure Gauge				
Electronic Mph Speedometer With Secondary Kph Scale, Without Odometer				
Standard Vehicle Speed Sensor				
Electronic 3000 Rpm Tachometer				
Idle Limiter, Electronic Engine				

Fire Apparatus and Custom Fabricators

DESCRIPTION	QTY	PRICE	STD.	INCLUDED OPT.
COMMERCIAL CAB HIGHSIDE / LOWSIDE PUMPER		$320,500.00		
(1) Normally Opened And (1) Normally Closed Electric Over Air Solenoids For Fire Pump Control With Park Brake Interlock And Dash Switch				
One On/Off Rocker Switch In The Dash With Indicator Light And Wire Routed To Chassis At Back Of Cab, Label Opt				
Digital Voltage Display Integral With Driver Display				
Single Electric Windshield Wiper Motor With Delay				
Marker Light Switch Integral With Headlight Switch				
One Valve Parking Brake System With Warning Indicator				
Self Canceling Turn Signal Switch With Dimmer, Washer/Wiper And Hazard In Handle				
Integral Electronic Turn Signal Flasher With Hazard Lamps Overriding Stop Lamps				
Cab Color A: L0214Eb Red Elite Bc				
Black, High Solids Polyurethane Chassis Paint				
Maxion Wheels W Powder White (N0006Ea) Front Wheels/Rims				
Powder White (N0006Ea) Rear Wheels/Rims (Pkwht21, Tkwht21, W, Tw)				
Bumper Paint: Fp24812 Argent Silver Dupont Flex				
U.S. FMVSS Certification				
CHASSIS UPFIT				
Chassis Steps - Factory Standard Steps	1		x	
Grab Handles, Cab - Provided By Chassis Manufacturer	1		x	
Exhaust Pipe - Right hand Ahead Of Rear Axle	1		x	
Rear Tow Eyes - Painted Steel (Under Tailboard)	2		x	
Vehicle Data Recorder - Weldon	1		x	
Seatbelt Warning System - Weldon	1		x	
Wheels - Unfinshed (Factory Color)	1		x	
Wheel Trim - Delete	1		x	
Tire Pressure Monitoring System - Valve Stem Indicators	6		x	
Rear Mud Flaps	2		x	
Fluid Identifcation Plate	1		x	
Fuel Type Label - Diesel	1		x	
Seating Label - Maximum Seating Of 2	1		x	
Vehicle Height Label	1		x	
Seatbelt Warning Label	1		x	
Riding On Step Warning Label - Rear of Body	1		x	
Helmet In Cab Warning Label	1		x	
NFPA Helmet Storage - Department To Store In Body	1		x	
BODY - Pumper				
Body Construction - Combination Formed Sheet / Extruded	1		x	

11 Sperti Drive, Edgewood, KY 41017
(859)331-0360
FAX: (859)331-0399

SUMMIT
Fire Apparatus and Custom Fabricators

DESCRIPTION	QTY	PRICE	STD.	INCLUDED OPT.
COMMERCIAL CAB HIGHSIDE / LOWSIDE PUMPER		$320,500.00		
Body Subframe - Aluminum Extruded	1		x	
Material - 190" and .160" 5052 Aluminum	1		x	
Body Mounting	1		x	
Polymer Isolation Strips - Chassis Frame	2		x	
Construction - All Aluminum	1		x	
Body Dimensions - 166" Long, 86" High, 96" Wide	1		x	
Compartment Interiors - Unfinished Aluminum	1		x	
Compartment Floors - Raised Sweep-out Type	1		x	
Rear Drop For Tailboard - Steel	1		x	
Rear Tail Board - 8 inch NFPA Aluminum Treadplate	1		x	
Fenderettes - Polised Stainless Steel	2		x	
Wheel Well Liners - Full Removable Poly Liners	2		x	
Corrosion Protection Pkg - Anti Corrosion Compound and Nylon Spacers on All Fasteners	1		x	
Hose Bed - Aluminum Extruded Floor	1		x	
Hose Bed Step - Integrated Body Step To Access Hose Bed Floor	1		x	
COMPARTMENTATION				
7-Bay With Rear Compartment Partially Transverse	1		x	
L1 Compartment Dimensions - 47" Wide x 72" High x 25" Deep	1		x	
L1 Adjustable Shelf Hard ware - P100 Aluminum Unistrut	4			x
L2 Compartment Dimensions - 60" Wide x 38" High x 25" Deep	1		x	
L2 Adjustable Shelf Hard ware - P100 Aluminum Unistrut	4			x
L3 Compartment Dimensions - 47" Wide x 72" High x 25" Deep	1		x	
L3 Adjustable Shelf Hard ware - P100 Aluminum Unistrut	4			x
R1 Compartment Dimensions - 47" Wide x 32" High x 25" Deep	1		x	
R1 Adjustable Shelf Hard ware - P100 Aluminum Unistrut	4			x
R2 Compartment Dimensions - 47" Wide x 32" High x 25" Deep	1		x	
R2 Adjustable Shelf Hard ware - P100 Aluminum Unistrut	4			x
Rear Compartment Dimensions - 44" Wide x 48" High x 23" Deep	1		x	
Adjustable Shelf Hardware, Rear Compartment- Delete	1		x	
Compartment Doors - Hansen Roll Up Doors	7		x	
Door Finish - Brushed	1		x	
Top Seal - Drip Rail With Wiper	7		x	
Internal Drip Pans - Delete	1		x	
Door Locks - Delete	1		x	
BODY UPFIT				

SUMMIT
Fire Apparatus and Custom Fabricators

DESCRIPTION	QTY	PRICE	STD.	INCLUDED OPT.
COMMERCIAL CAB HIGHSIDE / LOWSIDE PUMPER		$320,500.00		
Rear Hosebed Access Steps - Cast Aluminum Fixed	4			x
Grab Rails - Two (2) Vertical, One Each Side Of Rear Compartment	2		x	
Grab rails - Two (2) Horizontal, One in Hose Bed Step Area And One Below Step	2		x	
Folding Steps - Two (2) Front of Body Aid in Accesing Dunnage Area	2			x
Right Side External Storage Provisions For Mounting of Ladders & Hard Suction	2		x	
Cast Aluminum Ladder Mounting Brackets With Spring Release Handles	1		x	
Zico Folding Ladder Mounting Bracket Mounted on Right Side Compartment Top	1			x
Two (2) Hard Suction Hose Storage Troughs - Stainless Steel	2		x	
Cast Aluminum Fuel Housing	1		x	
Hose Bed Security Devices - Two (2) FRC Jack Staps	2		x	
PUMP				
Pump - Hale 1000 GPM	1		x	
Gearbox - In Cab Pneumatic Shift	1		x	
Priming Pump - Oil-less	1		x	
Auxillary Cooler - Pump/Engine Circulator	1		x	
Plumbing - Stainless Steel & High Pressure Hose	1		x	
Valves - Hale Quarter Turn Stainless Steel	1		x	
Steamer Inlets - 6"	2		x	
Left Auxillary Intake - (1) 2.5" Aux Intake	1		x	
Pump Cooler - Automatic Thermal Relief Valve	1		x	
Master Drain - Below Pumper Operators Panel	1		x	
Intake Relief Valve - Pressure Relief Valve	1		x	
Drains - Quarter Turn Valves	6		x	
Pump Module - 72" Self-Supported Structure Independent of Body w/ Dunnage Area &	1		x	
Pump Module Construction - Aluminum Extruded Constriction	1		x	
Dunnage Storage Area - Open Aluminum	1		x	
Pump House Running Boards - Aluminum NFPA Treadplate	2		x	
Hose Well In Running Boards - Delete	1		x	
Grab Handles - Two (2) Mounted to Module, One On Each Side	2		x	
Pump Panels - Stainless Steel	2		x	
Valve Controls - Class 1 Lock Push Pull	11		x	
Pressure Gauges - Class One Line Gauges	8		x	
Master Gauges - 3.5" Class 1 Gauges	2		x	
Pressure Governor - Class 1 Total Pressure Governor Plus	1		x	
Water Level Gauge - Class One 1 ITL	1		x	

SUMMIT
Fire Apparatus and Custom Fabricators

DESCRIPTION	QTY	PRICE	STD.	INCLUDED OPT.
COMMERCIAL CAB HIGHSIDE / LOWSIDE PUMPER		$320,500.00		
U.L. Test Ports	1		x	
Labels - All Intakes, Discharges, Drains & Gauges NFPA Labeled & Color Coded	1		x	
Tank To Pump Valve - 3" 1/4 Turn Ball Valve	1		x	
Tank Fill Valve - 1.5" 1/4 Turn Ball Valve	1		x	
2.5" Left Discharges - Two (2) 1/4 Turn Ball Valve	2		x	
2.5" Right Discharges - Two (2) 1/4 Turn Ball Valve	2		x	
Deluge Monitor - Delete (Capped)	1		x	
Crosslays- (2) 1.75" - Above Pump Module	2		x	
Crosslay Hose Security - Nylon Webbing With Velcro Fastening Left & Right Side	2		x	
Pump Compartment Light - (1) Teqniq LED	1		x	
Foam System - Delete	1		x	
Foam Discharges - Not Applicable	1		x	
TANK				
Booster Tank - UPF Poly 1000	1		x	
ISO Certification - 9001:2008	1		x	
Construction - Pt3 Polypropylene	1		x	
Closed Curve Baffling	1		x	
Fill Tower W/Cover - Center Mount	1		x	
Vent Overflow - 4 Inch	1		x	
Sump	1		x	
3" Npt Threaded Outlet Bottom Of Sump	1		x	
12 VOLT ELECTRICAL REQUIRMENTS				
12 Volt Elctrical System - Multiplex System	1		x	
Wiring Requirments - NFPA 1901	1		x	
SAE Practices & FMVSS Compliant	1		x	
Wiring - GXL Stranded Copper	1		x	
12V Dc Voltage Output Testing & Documentation	1		x	
Switch Panel - Cab mounted - One Master Switch Warning System	1		x	
Reserve Capacity Test:	1		x	
Alternator Performance Test At Idle:	1		x	
Alternator Performance Test At Full Load:	1		x	
Low Voltage Alarm Test:	1		x	
Documentation - NFPA Test Results	1		x	
Battery Disconnect Switch - Supplied Chassis Manufacturer	1		x	
Battery Light - Green L.E.D. Dash Mounted	1		x	
Clearance / Marker Lights - Tecniq P2 L.E.D	19		x	
License Plate Bracket and Light - Arrow	1		x	
Brake Lights, - Tecniq K60 Red L.E.D.	2		x	
Turn Lights - Tecniq K60 Amber L.E.D.	2		x	

SUMMIT
Fire Apparatus and Custom Fabricators

DESCRIPTION	QTY	PRICE	STD.	INCLUDED OPT.
COMMERCIAL CAB HIGHSIDE / LOWSIDE PUMPER		$320,500.00		
Backup Lights - Tecniq K60 Clear L.E.D.	2		x	
Light Cluster Housing - Chrome	2		x	
Engine Compartment Light - Grote 61491-5 Switched	1		x	
Ground Area Lighting 2 Door Cab - Tecniq L.E.D	2		x	
Ground Area Lighting Body - Tecniq L.E.D	4		x	
Hosebed Light Step - Recessed LED	1		x	
Rear Cargo Area Light - TecNiq LED	7		x	
Compartment Lighting - TecNiq L.E.D Single Dome	1		x	
Compartment Ajar Light - Weldon LED	1		x	
Low Voltage Alarm	1		x	
Battery Charging Receptacle - Polarity Plug For House Charger	1		x	
Light Bar - Whelen 60" Freedom L.E.D.	1		x	
Blocking Right Away	1		x	
Lower Zone A Warning Lights - Whelen 600 Series L.E.D.	2		x	
Lower Zone A Warning Light Chrome Flange - Whelen 6E flange	2		x	
Lower Zone B&D Intersection Lights - Whelen 600 Series L.E.D	2		x	
Lower Zone B&D Intersection Light Chrome Flange - Whelen 6E flange	2		x	
Lower Zone B&D Rear Warning Lights - Whelen 600 L.E.D. Series	2		x	
Lower Zone B&D Rear Warning Light Chrome Flange - Whelen 6Eflange	2		x	
Lower Zone C Warning Lights - Whelen 600 Series L.E.D.	2		x	
Upper Zones B,D & C Warning Lights - L31HRFN Series LED Beacons	2		x	
Electronic Siren - Whelen 295SLSA1	1		x	
Siren Speaker - Code 3 PB100B	1		x	
PAINTING AND STRIPING				
Undercoating - Delete	1		x	
PPG Two Stage Urethane - Body Job Color	1		x	
NFPA Perimeter - 4" White Reflective Cab	1		x	
NFPA Perimeter - 4" White Reflective Body	1		x	
NFPA Chevron 6' Red/Amber Reflective - Body Only (No Rear Door)	1		x	
WARRANTIES				
Limited Warranty (1-Year)	1		x	
Paint Warranty (7-Year)	1		x	
Electrical Warranty (10-Year)	1		x	
Body Structural Warranty (20-Year)	1		x	

SUMMIT
Fire Apparatus and Custom Fabricators

DESCRIPTION	QTY	PRICE	STD.	INCLUDED OPT.
COMMERCIAL CAB HIGHSIDE / LOWSIDE PUMPER		$320,500.00		
SUMMIT PROGRAM PUMPER OPTIONS				
CHASSIS OPTIONS: Freightliner				
4 Door Cab In Lieu Of The 2 Door Cab With Air Ride Drivers and		$9,600.00		
Detroit Da-F-12.0-3 12,000# Ff1 71.5 Kpi/3.74 Drop Single Front Axle		($462.00)		
Detroit Da-F-16.0-5 16,000# Fl1 71.0 Kpi/3.74 Drop Single Front Axle		$739.20		
Detroit Da-F-18.0-5 18,000# Fl1 71.0 Kpi/3.74 Drop Single Front Axle		$855.60		
Rs-23-161 24,000# R-Series Fire/Emergency Service Single Rear Axle		($1,700.00)		
Rs-30-185 31,000# U-Series Fire/Emergency Service Single Rear Axle		$1,764.00		
Dual West Coast Molded-In Color Heated Mirrors		$94.80		
Dual West Coast Bright Finish Heated Mirrors		$122.40		
Dual West Coast Bright Finish Mirrors		$98.40		
Dual West Coast Bright Finish Heated Mirrors With Lh And Rh Remote		$252.00		
Cum ISL 300 Hp @ 2000 Rpm, 2200 Gov Rpm, 860 Lb/Ft @ 1300 Rpm		($985.20)		
Cum ISL 350 Hp @ 2000 Rpm, 2200 Gov Rpm, 1000 Lb/Ft @ 1400 Rpm		$264.00		
Alcoa Lvl One 88367X 22.5X8.25 10-Hub Pilot 5.79 Inset Aluminum Disc Front Wheels		$260.40		
Alcoa Lvl One 88367X 22.5X8.25 10-Hub Pilot Aluminum Disc Rear Wheels		$458.40		
Polished Front And Rear Wheels; Outside Of Outer Wheels Only		$130.80		
LH And RH Electric Powered Windows		$139.20		
LH And RH Electric Door Locks		$93.60		

SUMMIT
Fire Apparatus and Custom Fabricators

DESCRIPTION	QTY	PRICE	STD.	INCLUDED OPT.
COMMERCIAL CAB HIGHSIDE / LOWSIDE PUMPER		$320,500.00		
Hood Mounted Chromed Plastic Grille		$78.00		
Chrome Hood Mounted Air Intake Grille		$38.40		
Three-Piece 14 Inch Chromed Steel Bumper With Collapsible Ends		$182.40		
Seats Inc 911 2 Man Mid Back Non Suspension Passenger Seat With Nfpa 2009 Compliant Seat Sensors		$817.20		
Seats Inc 911 Universal Series High Back Non Suspension Passenger Seat With Underseat Storage And Nfpa 1901-2009 Compliant Seat Sensor		($156.00)		
(1) Dash Mounted Pto Switch With Indicator Lamp For Customer Installed Pto		$93.60		
Stationary Painted Full Grille For Chassis Without Integral Front Frame Extensions		$254.40		
Power And Ground Wiring Provision For Cb		$18.00		
Roof/Overhead Console Cb Radio Provision With Face Plate		$68.40		
Two On/Off Rocker Switches In The Dash With Indicator Lights And Wire Routed To Chassis At Back Of Cab, Label Opt		$62.40		
Four On/Off Rocker Switches In The Dash With Indicator Lights And Wire Routed To Chassis At Back Of Cab, Label Opt		$106.80		
Customer Furnished Din Radio Package		$91.20		
Am/Fm/Wb Radio With Front Auxiliary Input		$205.20		
Synthetic 75W-90 Front Axle Lube		$12.00		
Synthetic 75W-90 Rear Axle Lube		$58.80		
Adjustable Tilt And Telescoping Steering Column		$326.40		
Preco 1040 87 Db To 112 Db Automatic Self-Adjusting Backup Alarm		$34.80		
RH Down View Mirror		$24.00		
CHASSIS UPFIT OPTIONS:				
Treadplate Vertical Fill Panels Using Existing Cab Steps		$520.00		
Punch Raised treadplate Full Cab Steps (2 Door)		$1,790.00		
Punch Raised treadplate Full Cab Steps (4 Door)		$1,800.00		
Front Bumper Extension 8" With Gravel Shield		$1,850.00		
Front Bumper Extension 18-24" With Gravel Shield		$3,700.00		
Front Bumper Extension Hose Well (No Discharge Provided) Requires 18-24" extension)		$550.00		
Vinyl Hose Tray Cover For Bumper Hose Tray		$150.00		
Treadplate Cover For Bumper Hose Tray With Latch		$295.00		
Center Console for radio & siren - Treadplate Aluminum (No Storage)		$895.00		

SUMMIT
Fire Apparatus and Custom Fabricators

DESCRIPTION	QTY	PRICE	STD.	INCLUDED OPT.
COMMERCIAL CAB HIGHSIDE / LOWSIDE PUMPER		$320,500.00		
Center Consolefor radio & siren - Smooth Aluminum (No Storage)		$785.00		
Book / Binder Misc Storage for console		$400.00		
Rubberized coating for console		$260.00		
Raised or Angled switch panel on console		$115.00		
Trailer Hitch - 2" Class 4 receiver (includes 4 way plug)		$990.00		
Seven way trailer plug in lieu of 4 way		$70.00		
Stainless Steel Wheel Simulators		$890.00		
Air Horns - Hood Mounted		$814.00		
Air Horns - Bumper Mounted (Need Bumper Extension)		$960.00		
Automatic Tire Chains - Rudd		$2,981.00		
Automatic Tire Chains - On Spot		$2,705.00		
Lighted Bumper Poles (Rookie Rods)		$325.00		
BODY OPTIONS:				
Highside Both Sides		$930.00		
Internal Ladder Storage - Right Side Thru Rear Of Body (Requires HighSide Option)				
ROM Roll Up Doors In Lieu of Hansen Roll Up Doors		$490.00		
Swing Doors In Lieu of Hansen Roll Up Doors		$520.00		
Hard Suction Storage Troughs - Top Road Side Compartments		$850.00		
Hard Suction Storage Compartment In Hose Bed With Access Door		$1,100.00		
Dual Bottle SCBA Storage In Lieu of Single (Pending on location; Pricing is each)		$150.00		
ROM Roll Up Doors in Lieu Of Hansen		$490.00		
Rub Rails with Conspicuity Stripe		$670.00		
Folding Steps on Front Of Body (Pair)		$245.00		
Protective TreadPlate Overlay On Front of Compartments		$375.00		
STORAGE OPTIONS:				
Tail Board Mounted "Doughnut" Hose Holder		$695.00		
Adjustable Trays (each)		$200.00		
Adjustable Slide Trays - 300 lb (each)		$555.00		
HD Slide Tray - 600 lb (each)		$650.00		
Plastic Floor Tile compartment floors		$118.00		
Plastic Floor Tile installed on shelf / Tray (each)		$75.00		
Hose Bed Cover - Vinyl Cover		$925.00		
Plastic Floor Tile compartment floors		$118.00		
Plastic Floor Tile installed on 24" shelf / Tray (each)		$75.00		
TANK OPTIONS:				
750 Gallon Tank In Lieu of 1000 Gallon Tank		($800.00)		
Fiberglass 1000 Gallon Tank In Lieu of Poly Tank		$850.00		

11 Sperti Drive, Edgewood, KY 41017
(859)331-0360
FAX: (859)331-0399

SUMMIT
Fire Apparatus and Custom Fabricators

DESCRIPTION	QTY	PRICE	STD.	INCLUDED OPT.
COMMERCIAL CAB HIGHSIDE / LOWSIDE PUMPER		$320,500.00		
Fiberglass 750 Gallon Tank In Lieu of 1000 Gallon Poly Tank		N/C		
PUMPS & PLUMBING:				
Hale 1250 GPM Pump in Lieu of 1000 GPM (2 x2.5" LS, 2 x 2.5" RS, and 3" Deluge)		$1,800.00		
Hale 1500 GPM Pump In Lieu of 1000 GPM (2 x2.5" LS, 1 x 2.5" RS, 1 x 3" LDH RS and 3" Deluge)		$2,600.00		
Hale 1500 GPM Wide Body Pump In Lieu of 1000 GPM (2 x2.5" LS, 1 x 2.5" RS, 1 x 3" LDH RS and 3" Deluge) Includes Wider Pump House		$11,250.00		
Waterous CSY 1250 GPM in Lieu Of The Hale 1000 GPM (2 x2.5" LS, 2 x 2.5" RS, and 3" Deluge)		$13,540.00		
Waterous CSY 1500 GPM in Lieu Of The Hale 1000 GPM (2 x2.5" LS, 1 x 2.5" RS, 1 x 3" LDH RS, and 3" Deluge)		$14,010.00		
1.5" Trash Line Run to Front Bumper (Must Select Bumper Extension)		$1,100.00		
LDH Discharge on Right Side Pump Panel		$1,900.00		
Right Side 2.5"Suction		$1,325.00		
2.5" Rear Discharge - One (1) Right Hand		$2,100.00		
Hose Well In Pump House Running Board - Includes Velcro Strap		$750.00		
Foam Pro 1600 Includes Foam Cell In Tank (X-Lays Only)		$6,320.00		
Foam Pro 2001 - Single Foam System, Includes Foam Cell In Tank		$7,900.00		
Foam Pro 2001 - Dual Foam System, Includes Two Foam Cells In		$9,800.00		
Foam Pro 2024 - Single Foam System, Includes One Foam Cell In Tank (X-Lays,Trash, One 2-1/2")		$9,720.00		
Foam Pro 2024 - Dual Foam System, Includes Two 20 Gallon Foam Cells In Tank (X-Lays,Trash, One 2-1/2")		$11,160.00		
Foam Pro Uplift System - Single		$2,350.00		
Foam Pro Uplift System - Dual		$4,580.00		
ELECTRIC:				
Kussmaul Battery Conditioner with Auto Eject In Lieu of Polarity Plug		$995.00		
Kussmaul Pump Plus, Battery Conditioner with Auto Eject In Lieu of Polarity Plug		$1,760.00		
Auto Air Eject For House Air Supply		$445.00		
Whelen 900 Series LED In Upper Zones B&D and C in lieu of Beacons		$420.00		
Single Strip LED Strip Compartment Lighting in lieu single LED		$750.00		
Dual Strip LED Strip Compartment Lighting in lieu single LED		$1,620.00		
LED Ground lights under front of body		$240.00		
LED Ground light under front bumper		$180.00		

SUMMIT
Fire Apparatus and Custom Fabricators

DESCRIPTION	QTY	PRICE	STD.	INCLUDED OPT.
COMMERCIAL CAB HIGHSIDE / LOWSIDE PUMPER		$320,500.00		
Cab Brow Light - Single (Center) Over Cab - Whelen PFP2 Pioneer 16000 Lumen, L.E.D, 12 Volt		$2,103.00		
Cab Brow Light - Single (Center) Over Cab - FRC FCA800-V08 8,000 Lumen, L.E.D, 12 Volt		$1,555.00		
Cab Brow Light - Single (Center) Over Cab - FRC FCA800-V15 15,000 Lumen, L.E.D, 12 Volt		$1,686.00		
Cab Brow Light - Single (Center) Over Cab - FRC SPA800-Q15 15,000 Lumen, L.E.D, 12 Volt		$1,899.00		
Cab Brow Light - Single (Center) Over Cab - FRC SPA800-Q20 20,000 Lumen, L.E.D, 12 Volt		$2,093.00		
120/240 VOLT ELECTRICAL OPTIONS				
5000 W Gasoline Powered Honda Generator - Mounted on slide tray (Elec Start)		$4,200.00		
5000 W Gasoline Powered Generator - Mounted on slide tray (Elec Start)		$2,800.00		
3000 W Baldor Diesel Generator Mounted on slide tray (Elec Start)		$4,200.00		
5500 W Baldor Diesel Generator Mounted on slide tray (Elec Start)		$5,450.00		
120/240 Volt load center with up to 4 breakers & pigtail for genertaor (Gas or Diesel Generators Only)		$750.00		
Fuel Tap from chassis (Diesel)		$610.00		
6 KW Smart Power Hydraulic Generator With Load Center		$11,828.00		
8 KW Smart Power Hydraulic Generator With Load Center		$14,923.00		
10KW Smart Power Hydraulic Generator With Load Center		$15,972.00		
15KW Smart Power Hydraulic Generator With Load Center		$20,321.00		
20KW Smart Power Hydraulic Generator With Load Center		$22,206.00		
Remote Generator Activation From Pump Panel		$250.00		
Exterior Receptacles - Covered Duplex 5-20		$285.00		
Interior 120 Volt Receptacles - Cab, Duplex 5-15		$320.00		
Interior 120 Volt Receptacles - Body Compartrment, Duplex 5-15		$250.00		
220 Volt Receptacle - Body Compartment		$295.00		
Electric Cord Reel - 200' 10/3 Black Cable		$2,180.00		
Electric Cord - 200' 10/3 Yellow Cord In Lieu Of The Black		$180.00		
Electric Cord Ball Stop		$25.00		
Electric Junction Box - Akron With 4 L5-20 Receptacles		$425.00		
Electric Junction Box - Circle D With 4 L5-20 Receptacles		$545.00		
Fair Lead, Cord Reel - Hannay 4 Way		$180.00		
Sumit Extendible or Swing Out Fair Lead		$340.00		
Junction Box Mounting Bracket - Aluminum		$150.00		
Side Mount Push-Up Lights - Akron ELNB-750-Pod 120Volt, 750 Watt Lights (Per Pair)		$1,665.00		

SUMMIT
Fire Apparatus and Custom Fabricators

DESCRIPTION	QTY	PRICE	STD.	INCLUDED OPT.
COMMERCIAL CAB HIGHSIDE / LOWSIDE PUMPER		$320,500.00		
Side Mount Push Up Lights - FRC FCA530-S75 120 Volt 750 Watt Lights (Per Pair)		$1,632.00		
Side Mount Push Up Lights - FRC FCA530-M10 1000 Watt Lights (Per Pair)		$1,745.00		
Side Mount Push Up Lights - FRC FCA530-M12 240 Volt, 1000 Watt Lights (Per Pair)		$1,832.00		
Side Mount Push Up Lights - FRC OPA530-S75 120 Volt 750 Watt Lights (Per Pair)		$1,685.00		
Side Mount Push Up Lights - FRC OPA530-M10 1000 Watt Lights (Per Pair)		$1,847.00		
Side Mount Push Up Lights - FRC OPA530-M12 240 Volt, 1000 Watt Lights (Per Pair)		$1,910.00		
PAINT:				
Two Tone Chassis - Two Door		$2,810.00		
Two Tone Chassis - Four Door		$3,210.00		
Two Tone Body		$2,550.00		
Body Undercoating		$415.00		
STRIPING & LETTERING:				
NFPA Perimeter Stripe 4"		$642.00		
1- 4 -1 NFPA Perimeter Stripe 4" with 1" stripe above and below		$792.00		
Z pattern in stripe		$130.00		
Sixty (60) 3" Reflective Lettering		$705.00		

11 Sperti Drive, Edgewood, KY 41017
(859)331-0360
FAX: (859)331-0399

Fire Apparatus and Custom Fabricators

DESCRIPTION	QTY	PRICE	STD.	INCLUDED OPT.
COMMERCIAL CAB HIGHSIDE / LOWSIDE PUMPER		$320,500.00		

11 Sperti Drive, Edgewood, KY 41017
(859)331-0360
FAX: (859)331-0399

Fire Apparatus and Custom Fabricators

DESCRIPTION	QTY	PRICE	STD.	INCLUDED OPT.
CUSTOM CAB HIGHSIDE / LOWSIDE PUMPER		$320,000.00		
CHASSIS				
Metro Star				
Summit Fire (SUM1001)				
Model Year - 2015				
Country of Service United States Of America				
Apparatus Type Pumper				
Vehicle Type Straight Truck				
Axle Configuration 4x2 (Rear Axle Drive Only)				
GAWR Front 20000#				
GAWR Rear 24000#				
Pump Provision Driveline Midship				
Cab Style MFD 20" Raised Roof				
Occupant Protection Advanced Protection System				
Cab Frt Fascia Classic				
Cab Frt Grille Hinged Classic Styled				
Cab Undercoat				
Cab Side Drip Rail				
Cab Paint Exterior Single Color				
Cab Paint Manufacturer PPG				
Cab Paint Primary/Lower Color No Selection/TBD				
Cab Paint Warranty 2015 (10) Year/100,000 Miles				
Cab Paint Int Zolatone Silver Gray				
Cab Entry Doors (4)				
Cab Entry Door Type Full Length				
Cab Insulation				
Cab Structural Warranty 2015 (10) Year/100,000 Miles				
Cab Test Information Crash Test ECE-R29/SAE J2420/SAE J2422				
Elec System 12V DC				
Data Recording Sys Vehicle Data Weldon w/Remote USB Data Link				
Accessory Pwr & Gnd Stud 40A Batt Dir & 15A Ign Sw				
Aux Acc Pwr & Gnd Stud Bhd Sw Pnl 40A Mstr Sw				
Addl Acc Pwr 10 Fuse Pnl Bhd Off Seat w/40A Fuse Batt Dir				
Exterior Electrical Terminal Coating Spray On Plasti Dip				
Engine Diesel 330HP Cummins ISL9 - EPA 2013				
Cab Engine Tunnel Small/Medium				
DPF Ctrl Regeneration Sw & Inhibit Sw				
Engine Programming High Idle Speed 1250 RPM				
Engine High Idle Ctrl Manual				
Engine Programming Road Speed Governor Enabled				
Aux Engine Brake Compression Brake w/VG Turbo				
Aux Engine Brake Ctrl On/Off & Low/Med/High Sw Pnl				

SUMMIT
Fire Apparatus and Custom Fabricators

DESCRIPTION	QTY	PRICE	STD.	INCLUDED OPT.
CUSTOM CAB HIGHSIDE / LOWSIDE PUMPER		$320,000.00		
Elec Engine Oil Level Indicator				
Fluid Fills Fwd For Med Displacement Cap				
Engine Drain Plug				
Engine Warranty Cummins (5) Year/100,000 Miles				
Engine Program Rmt Throttle On				
Engine Programming Idle Speed 700 RPM				
Engine Fan Drive Direct				
Engine Cooling Sys Serial Flow Medium				
Engine Cooling System Protection Light Duty Skid Plate				
Engine Coolant Extended Life				
Elec Low Coolant Level Indicator				
Engine Pump Heat Exchanger				
Coolant Hoses Silicone Heater & Radiator w/Cab Int Rubber Hoses				
Engine Air Intake Filtration and Restriction w/Replaceable Element				
Air Intake Protection Light Duty Skid Plate				
Eng Exhaust Sys Under Frm RH Outboard w/DPF/SCR Inline				
Diesel Exhaust Fluid Tank LH 6 Gal Fill Thru Rr Step				
Engine Exh Acc Exh Temp Mitigation				
Engine Exhaust Wrap				
Transmission Allison 3000 EVS				
Transmission Mode Programming 5th Startup/6th Mode				
Transmission Feature Programming Allison Gen V-E I/O Package 198/Pumper				
Transmission GEN V-E Shift Sel Key Pad/Push Button				
Elec Transmission Oil Level Indicator				
2nd Gear Pre-Select				
Transmission Cooling System				
Transmission Drain Plug				
Transmission Warranty Allison (5) Year				
PTO Location 8:00/4:00				
Driveline Spicer 1710 HD				
Midship Pump Jackshaft Only				
Midship Pump/Gearbox Model Hale QMAX				
Midship Pump Gearbox Drop Hale "L"				
Midship Pump Ratio 2.28:1 (23)				
Midship Pump Location C/L Suction to C/L Rear Axle 80.0"				
Fuel Filter/Wtr Separator Fleetguard FS1003 w/Lt & Alarm				
Fuel Lines Nylon				
Electric Fuel Primer Engine Sply Electric Lift Pump				
Fuel Tank 50 Gallon				
Fuel Tank Fill Port LH Rwd/RH Mid				
Frt Axle Meritor MFS 20000# Beam				

11 Sperti Drive, Edgewood, KY 41017
(859)331-0360
FAX: (859)331-0399

SUMMIT
Fire Apparatus and Custom Fabricators

DESCRIPTION	QTY	PRICE	STD.	INCLUDED OPT.
CUSTOM CAB HIGHSIDE / LOWSIDE PUMPER		$320,000.00		
Front Axle Warranty Meritor 2015				
Frt Wheel Bearing Lube Oil				
Frt Shock Absorbers Bilstein				
Frt Suspension 9 Leaf 20000-21500#				
Steering Column/Wheel Tilt/Telescopic 18" 4 Spoke				
Elec Power Steering Fluid Level Indicator				
Power Steering Pump TRW				
Front Axle Cramp Angle 48L/44R Degrees				
Power Steering Gear TRW TAS 65 w/Assist				
Chassis Alignment				
Rear Axle 24000# Meritor RS-24-160				
Rear Axle Warranty Meritor 2015				
Rear Axle Differential Lubrication Oil				
Rear Wheel Bearing Lubrication Oil				
Vehicle Top Speed 65 MPH				
Rear Susp Reyco 79KB Spring 21000-31500# Conventional				
Frt Tire 385/65R 22.5 Michelin XZY3				
Rear Tire 12R 22.5 Michelin XZE				
Rear Axle Ratio 6.14				
Tire Pressure Ind Frt & Rr Pop Up Voucher				
Frt Wheel Accuride 22.5 x 12.25 Steel				
Rr Whl Accuride 22.5 x 8.25 Steel				
Wheel Paint Primary/Lower Cab Color				
Brake System ABS/ATC/ESC Sgl Axle				
Frt Brakes S-Cam Drum 16.5" x 6"				
Rr Brakes S-Cam Drum 16.5" x 7"				
Prk Brake Rr Wheels Only				
Prk Brake Ctrl Ctr Tunnel Mnt				
Frt Brake Slack Adjusters Meritor				
Rr Brake Slack Adjusters Meritor				
Air Dryer Wabco System Saver 1200 Bhd LH Batt Box				
Frt Brake Chambers MGM Type 30				
Rr Brake Chambers TSE 30/30				
Air Compressor Wabco SS318 18.7 CFM				
Air Governor Mnt on Air Dryer Bracket				
Moisture Ejectors Manual/Auto Wet Tank				
Air Sply Lines Nylon				
Rear Air Tank Mnt Any Bhd Rear Axle Perpendicular w/Frame				
Wheelbase 200.0"				
Rear Overhang 47.0"				
Frame Double Channel 35.00" Width				
Frame Warranty Lifetime 2015				
Frame Paint Powder Coat Black				
Frt Bumper Stainless Steel Flat				

11 Sperti Drive, Edgewood, KY 41017
(859)331-0360
FAX: (859)331-0399

SUMMIT
Fire Apparatus and Custom Fabricators

DESCRIPTION	QTY	PRICE	STD.	INCLUDED OPT.
CUSTOM CAB HIGHSIDE / LOWSIDE PUMPER		$320,000.00		
Frt Bumper Extension Length 24"				
Frt Bumper Extension Frame Width 48.25"				
Air Horn 24" Round Hadley E-Tone				
Air Horn Location Frt Bmpr Face LH IB				
Air Horn Reservoir (1) 1200 Cu In				
Frt Bumper Tow Hooks Painted Side Rwd				
Cab Tilt System				
Cab Tilt Ctrl Receptacle Temp				
Cab Windshield				
Glass Frt Dr Roll Down/XDuty Regulator				
Glass Tint Frt Dr Automotive Green				
Glass Rr Dr RH Roll Down/XDuty Regulator				
Glass Tint Rr Door RH Automotive Green				
Glass Rr Dr LH Roll Down/XDuty Regulator				
Glass Tint Rr Door LH Automotive Green				
Glass Side Mid RH Fxd 16"W x 26"H				
Glass Tint Side Mid RH Automotive Green				
Glass Side Mid LH Fxd 16"W x 26"H				
Glass Tint Side Mid LH Automotive Green				
Glass Upper Side Frt (2) R/L Fxd 12.5"W x 11"H				
Glass Tint Upper Side Frt Automotive Green				
Glass Upper Side Mid (2) R/L Fxd 16"W x 14"H				
Glass Tint Upper Side Mid Automotive Green				
Glass Upper Side Rr Door (2) R/L Fxd 27"W x 14"H				
Glass Tint Upper Side Rr Door Automotive Green				
Climate Ctrl Htr Defroster Frt Ovrhd/Htr A/C Tunnel Mnt				
Climate Control Drain Gravity				
Climate Ctrl Actv Device Mnt Ovrhd/Device Mnt Tunnel				
A/C Condenser Location Roof Mnt Fwd Ctr				
A/C Compressor Large Capacity				
Under Cab Insulation Engine Tunnel				
Interior Trim Floor				
Interior Trim Vinyl				
Rear Wall Interior Trim Vinyl				
Header Trim ABS				
Trim Center Dash ABS				
Trim LH Dash ABS				
Trim RH Dash ABS Glove Cmpt/MDT Prov				
Eng Tnl Trim Flr Mat				
Step Trim Grip Strut Lwr Flex-Tred Mid				
Under Cab Access Door Rear Step LH Painted				
Interior Door Trim Painted				
Door Trim Customer Nameplate				
Cab Dr Trim Reflective Vert Stripe/6" Chevron w/Logo				

Fire Apparatus and Custom Fabricators

DESCRIPTION	QTY	PRICE	STD.	INCLUDED OPT.
CUSTOM CAB HIGHSIDE / LOWSIDE PUMPER		$320,000.00		
Interior Grab Handle 'A' Pillar 11" Molded				
Interior Grab Handle Frt Door Horiz 9"				
Int Grab Handle Rr Dr Alum Window Span 30" Black Powder Coat				
Interior Trim Vinyl Color Gray				
Interior Trim Sunvisor Vinyl				
Interior ABS Trim Color Gray				
Interior Floor Mat Color Gray				
Cab Paint Int Dr Trim Zolatone Silver Gray				
Dash Pnl Group 3-Pnl				
Switches Ctr Pnl 12 (6+6) LH				
Switches Left Pnl 8 Upper w/Headlight/Dimmer/Wiper				
Switches Right Pnl 0				
Seat Belt Warn Indv Seat Loc & LED Display w/VDR Weldon				
Seat Material Ballistic				
Seat Color Gray/Red Seat Belts				
Seat Back Logo Spartan Chassis				
Seat Driver Bostrom Firefighter 4-Way Air Non-ABTS				
Seat Back Driver Non-SCBA Non-ABTS				
Seat Mounting Driver				
Occupant Protection Driver Advanced Protection System				
Seat Officer Bostrom Firefighter 2-Way Manual ABTS				
Seat Back Officer Non-SCBA ABTS				
Seat Mounting Officer				
Occupant Protection Officer Advanced Protection System				
Seat Belt Orientation Crew Outboard Shoulder To Inboard Hip				
Seat RFO Location (2) R/L				
Seat Crew RFO Bostrom Firefighter Fixed				
Seat Back RFO SCBA Bostrom SecureAll w/Quick-Adjust				
Seat Mounting Rear Facing Outer				
Occupant Protection RFO Advanced Protection System				
Seat FFC Location (2) Ctr				
Seat Crew FFC Bostrom Firefighter Flip-Up				
Seat Back FFC SCBA Bostrom SecureAll w/Quick-Adjust				
Occupant Protection FFC Advanced Protection System				
Seat Frm Fwd Fcg Dual				
Seat Frm Fwd Fcg Strg Acc Dr (2) R/L Sd				
Seat Mounting Forward Facing Center				
Cab Frt Undrst Strg Acc Dr				
Seat Compartment Door Finish Zolatone Silver Gray				
Windshield Wiper System Single Motor				
Electronic Windshield Fluid Level Indicator				
Cab Door Hardware Black				
Door Locks Manual				

Fire Apparatus and Custom Fabricators

DESCRIPTION	QTY	PRICE	STD.	INCLUDED OPT.
CUSTOM CAB HIGHSIDE / LOWSIDE PUMPER		$320,000.00		
Grab Handles SS 18"				
Mirror Aerodynamic Retrac 613265 Rmt				
Cab Fender Alum Wide				
Cab Ext Frt & Side Emblems w/Side Emblem Integrated Model Nameplate				
Cab Exterior Model Nameplate Metro Star Advanced Protection System w/Emblem				
Ign Mstr Sw w/Keyless Start				
Batt (6) Group 31 Harris				
Batt Tray (2) R/L Steel				
Batt Box Cover (2) Steel w/Black Handles				
Batt Cables				
Batt Jumper Stud Frt LH Lwr Step				
Alternator Leece-Neville 270A				
Headlights 4 Headlamps Halogen				
Frt Turn Signals Whelen 600 Series Halogen				
Headlights Below Frt Warn Lts				
Side Turn/Marker Lts LED				
Marker & ICC Lts Face Mnt LED				
Hdlt & Mrkr Lt Actv Rkr Sw/DRL				
Ground Lts Resp Dr & Rkr Sw				
Step Lts LED				
Engine Cmpt Work Lt (1)				
Interior Overhead Lts Weldon w/Front Map Lts				
Do Not Move App Lt Flashing Red w/Alarm				
Mstr Warn Sw Pnl				
Inboard Frt Warn Lts Whelen 600 Super LED Chrm Bezel				
Inboard Frt Warn Lts Color Red				
Frt Warn Sw Pnl				
Horn Btn Sel Sw Elec Horn/Air Horn				
Air Horn Actv Strg Whl/RH Ft Sw				
Back-Up Alarm Ecco 575				
Instrumentation Standard				
Backlighting Color Red				
Panel Layout				
Cab Exterior Protection Front				
Fire Extinguisher Ship Loose				
Door Keys for Manual Locks (4)				
Diagnostic Software Occupant Protection Advanced Protection System				
Warranty Cab and Chassis 2015 (2) Year				
Cab and Chassis Labeling Language English				
Chassis Operation Manual Digital Copy (2)				

SUMMIT
Fire Apparatus and Custom Fabricators

DESCRIPTION	QTY	PRICE	STD.	INCLUDED OPT.
CUSTOM CAB HIGHSIDE / LOWSIDE PUMPER		$320,000.00		
Eng & Trans Operation Man Eng Hard Copy/Trans Digital/Eng Owner Digital				
Cab/Chassis As Built Wiring Diagrams Digital Copy (2)				
Sales Terms				
End of Frame Cross Member				
CHASSIS UPFIT				
Chassis Steps - Factory Standard Steps With Aluminum Tread Plate Trim	1		x	
Grab Handles, Cab - Provided By Chassis Manufacturer	1		x	
Exhaust Pipe - Right hand Ahead Of Rear Axle	1		x	
Rear Tow Eyes - Painted Steel (Under Tailboard)	2		x	
Vehicle Data Recorder - Weldon	1		x	
Seatbelt Warning System - Weldon	1		x	
Wheels - Unfinshed (Factory Color)	1		x	
Wheel Trim - Delete	1		x	
Tire Pressure Monitoring System - Valve Stem Indicators	6		x	
Rear Mud Flaps	2		x	
Fluid Identifcation Plate	1		x	
Fuel Type Label - Diesel	1		x	
Seating Label - Maximum Seating Of 2	1		x	
Vehicle Height Label	1		x	
Seatbelt Warning Label	1		x	
Riding On Step Warning Label - Rear of Body	1		x	
Helmet In Cab Warning Label	1		x	
NFPA Helmet Storage - Department To Store In Body	1		x	
BODY - Rescue Style Pumper				
Body Construction - Combination Formed Sheet / Extruded	1		x	
Body Subframe - Aluminum Extruded	1		x	
Material - 190" and .160" 5052 Aluminum	1		x	
Body Mounting	1		x	
Polymer Isolation Strips - Chassis Frame	2		x	
Construction - All Aluminum	1		x	
Body Dimensions - 166" Long, 86" High, 96" Wide	1		x	
Compartment Interiors - Unfinished Aluminum	1		x	
Compartment Floors - Raised Sweep-out Type	1		x	
Rear Drop For Tailboard - Steel	1		x	
Rear Tail Board - 8 inch NFPA Aluminum Treadplate	1		x	
Fenderettes - Polised Stainless Steel	2		x	
Wheel Well Liners - Full Removable Poly Liners	2		x	
Corrosion Protection Pkg - Anti Corrosion Compound and Nylon Spacers on All Fasteners	1		x	

11 Sperti Drive, Edgewood, KY 41017
(859)331-0360
FAX: (859)331-0399

SUMMIT
Fire Apparatus and Custom Fabricators

DESCRIPTION	QTY	PRICE	STD.	INCLUDED OPT.
CUSTOM CAB HIGHSIDE / LOWSIDE PUMPER		$320,000.00		
Hose Bed - Aluminum Extruded Floor	1		x	
Hose Bed Step - Integrated Body Step To Access Hose Bed Floor	1		x	
COMPARTMENTATION				
7-Bay With Rear Compartment Partially Transverse	1		x	
L1 Compartment Dimensions - 47" Wide x 72" High x 25" Deep	1		x	
L1 Adjustable Shelf Hard ware - P100 Aluminum Unistrut	4			x
L2 Compartment Dimensions - 60" Wide x 38" High x 25" Deep	1		x	
L2 Adjustable Shelf Hard ware - P100 Aluminum Unistrut	4			x
L3 Compartment Dimensions - 47" Wide x 72" High x 25" Deep	1		x	
L3 Adjustable Shelf Hard ware - P100 Aluminum Unistrut	4			x
R1 Compartment Dimensions - 47" Wide x 32" High x 25" Deep	1		x	
R1 Adjustable Shelf Hard ware - P100 Aluminum Unistrut	4			x
R2 Compartment Dimensions - 47" Wide x 32" High x 25" Deep	1		x	
R2 Adjustable Shelf Hard ware - P100 Aluminum Unistrut	4			x
Rear Compartment Dimensions - 44" Wide x 48" High x 23" Deep	1		x	
Adjustable Shelf Hardware, Rear Compartment- Delete	1		x	
Compartment Doors - Hansen Roll Up Doors	7		x	
Door Finish - Brushed	1		x	
Top Seal - Drip Rail With Wiper	7		x	
Internal Drip Pans - Delete	1		x	
Door Locks - Delete	1		x	
BODY UPFIT				
Rear Hosebed Access Steps - Cast Aluminum Fixed	4			x
Grab Rails - Two (2) Vertical, One Each Side Of Rear Compartment	2		x	
Grab rails - Two (2) Horizontal, One in Hose Bed Step Area And One Below Step	2		x	
Folding Steps - Two (2) Front of Body Aid in Accesing Dunnage Area	2			x
Right Side External Storage Provisions For Mounting of Ladders & Hard Suction	2		x	
Cast Aluminum Ladder Mounting Brackets With Spring Release Handles	1		x	
Zico Folding Ladder Mounting Bracket Mounted on Right Side Compartment Top	1			x
Two (2) Hard Suction Hose Storage Troughs - Stainless Steel	2		x	

11 Sperti Drive, Edgewood, KY 41017
(859)331-0360
FAX: (859)331-0399

SUMMIT
Fire Apparatus and Custom Fabricators

DESCRIPTION	QTY	PRICE	STD.	INCLUDED OPT.
CUSTOM CAB HIGHSIDE / LOWSIDE PUMPER		$320,000.00		
Cast Aluminum Fuel Housing	1		x	
Hose Bed Security Devices - Two (2) FRC Jack Staps	2		x	
PUMP				
Pump - Hale 1000 GPM	1		x	
Gearbox - In Cab Pneumatic Shift	1		x	
Priming Pump - Oil-less	1		x	
Auxillary Cooler - Pump/Engine Circulator	1		x	
Plumbing - Stainless Steel & High Pressure Hose	1		x	
Valves - Hale Quarter Turn Stainless Steel	1		x	
Steamer Inlets - 6"	2		x	
Left Auxillary Intake - (1) 2.5" Aux Intake	1		x	
Pump Cooler - Automatic Thermal Relief Valve	1		x	
Master Drain - Below Pumper Operators Panel	1		x	
Intake Relief Valve - Pressure Relief Valve	1		x	
Drains - Quarter Turn Valves	6		x	
Pump Module - 72" Self-Supported Side Mount Structure, Independent of Body w/ Dunnage Area &	1		x	
Pump Module Construction - Aluminum Extruded Constriction	1		x	
Pump Operation Type - Side Mount	1		x	
Dunnage Storage Area - Open Aluminum	1		x	
Pump House Running Boards - Aluminum NFPA Treadplate	2		x	
Hose Well In Running Boards - Delete	1		x	
Grab Handles - Two (2) Mounted to Module, One On Each Side	2		x	
Pump Panels - Stainless Steel	2		x	
Valve Controls - Class 1 Lock Push Pull	11		x	
Pressure Gauges - Class One Line Gauges	8		x	
Master Gauges - 3.5" Class 1 Gauges	2		x	
Pressure Governor - Class 1 Total Pressure Governor Plus	1		x	
Water Level Gauge - Class One 1 ITL	1		x	
U.L. Test Ports	1		x	
Labels - All Intakes, Discharges, Drains & Gauges NFPA Labeled & Color Coded	1		x	
Tank To Pump Valve - 3" 1/4 Turn Ball Valve	1		x	
Tank Fill Valve - 1.5" 1/4 Turn Ball Valve	1		x	
2.5" Left Discharges - Two (2) 1/4 Turn Ball Valve	2		x	
2.5" Right Discharges - Two (2) 1/4 Turn Ball Valve	2		x	
Deluge Monitor - Delete (Capped)	1		x	
Crosslays- (2) 1.75" - Above Pump Module	2		x	
Crosslay Hose Security - Nylon Webbing With Velcro Fastening Left & Right Side	2		x	
Pump Compartment Light - (1) Teqniq LED	1		x	
Foam System - Delete	1		x	

Fire Apparatus and Custom Fabricators

DESCRIPTION	QTY	PRICE	STD.	INCLUDED OPT.
CUSTOM CAB HIGHSIDE / LOWSIDE PUMPER		$320,000.00		
Foam Discharges - Not Applicable	1		x	
TANK				
Booster Tank - UPF Poly 1000	1		x	
ISO Certification - 9001:2008	1		x	
Construction - Pt3 Polypropylene	1		x	
Closed Curve Baffling	1		x	
Fill Tower W/Cover - Center Mount	1		x	
Vent Overflow - 4 Inch	1		x	
Sump	1		x	
3" Npt Threaded Outlet Bottom Of Sump	1		x	
12 VOLT ELECTRICAL REQUIRMENTS				
12 Volt Elctrical System - Multiplex System	1		x	
Wiring Requirments - NFPA 1901	1		x	
SAE Practices & FMVSS Compliant	1		x	
Wiring - GXL Stranded Copper	1		x	
12V Dc Voltage Output Testing & Documentation	1		x	
Switch Panel - Cab mounted - One Master Switch Warning System	1		x	
Reserve Capacity Test:	1		x	
Alternator Performance Test At Idle:	1		x	
Alternator Performance Test At Full Load:	1		x	
Low Voltage Alarm Test:	1		x	
Documentation - NFPA Test Results	1		x	
Battery Disconnect Switch - Supplied Chassis Manufacturer	1		x	
Battery Light - Green L.E.D. Dash Mounted	1		x	
Clearance / Marker Lights - Tecniq P2 L.E.D	19		x	
License Plate Bracket and Light - Arrow	1		x	
Brake Lights, - Tecniq K60 Red L.E.D.	2		x	
Turn Lights - Tecniq K60 Amber L.E.D.	2		x	
Backup Lights - Tecniq K60 Clear L.E.D.	2		x	
Light Cluster Housing - Chrome	2		x	
Engine Compartment Light - Grote 61491-5 Switched	1		x	
Ground Area Lighting 2 Door Cab - Tecniq L.E.D	2		x	
Ground Area Lighting Body - Tecniq L.E.D	4		x	
Hosebed Light Step - Recessed LED	1		x	
Rear Cargo Area Light - TecNiq LED	7		x	
Compartment Lighting - TecNiq L.E.D Single Dome	1		x	
Compartment Ajar Light - Weldon LED	1		x	
Low Voltage Alarm	1		x	
Battery Charging Receptacle - Polarity Plug For House Charger	1		x	
Light Bar - Whelen 60" Freedom L.E.D.	1		x	

SUMMIT
Fire Apparatus and Custom Fabricators

DESCRIPTION	QTY	PRICE	STD.	INCLUDED OPT.
CUSTOM CAB HIGHSIDE / LOWSIDE PUMPER		$320,000.00		
Blocking Right Away	1		x	
Lower Zone A Warning Lights - Whelen 600 Series L.E.D.	2		x	
Lower Zone A Warning Light Chrome Flange - Whelen 6E flange	2		x	
Lower Zone B&D Intersection Lights - Whelen 600 Series L.E.D	2		x	
Lower Zone B&D Intersection Light Chrome Flange - Whelen 6E flange	2		x	
Lower Zone B&D Rear Warning Lights - Whelen 600 L.E.D. Series	2		x	
Lower Zone B&D Rear Warning Light Chrome Flange - Whelen 6Eflange	2		x	
Lower Zone C Warning Lights - Whelen 600 Series L.E.D.	2		x	
Upper Zones B,D & C Warning Lights - L31HRFN Series LED Beacons	2		x	
Electronic Siren - Whelen 295SLSA1	1		x	
Siren Speaker - Code 3 PB100B	1		x	
PAINTING AND STRIPING				
Undercoating - Delete	1		x	
PPG Two Stage Urthane - Body Job Color	1		x	
NFPA Perimeter - 4" White Reflective Cab	1		x	
NFPA Perimeter - 4" White Reflective Body	1		x	
NFPA Chevron 6' Red/Amber Reflective - Body Only (No Rear Door)	1		x	
WARRANTIES				
Limited Warranty (1-Year)	1		x	
Paint Warranty (7-Year)	1		x	
Electrical Warranty (10-Year)	1		x	
Body Structural Warranty (20-Year)	1		x	
SUMMIT PROGRAM PUMPER OPTIONS				
SPARTAN METRO CHASSIS OPTIONS				
20" MFD Cab In Lieu Of 10" Raised Roof MFD Cab		$1,752.00		
20" Raised Roof LFD Cab In Lieu Of 10" Raised Roof MFD Cab		$4,924.00		
10" Raised Roof LFD Cab In Lieu Of 10" Raised Roof MFD Cab		$3,204.00		

SUMMIT
Fire Apparatus and Custom Fabricators

DESCRIPTION	QTY	PRICE	STD.	INCLUDED OPT.
CUSTOM CAB HIGHSIDE / LOWSIDE PUMPER		$320,000.00		
350 Hp Cummins ISL In Lieu Of The 330 Hp Cummins ISL		$297.00		
380 Hp Cummins ISL In Lieu Of The 330 Hp Cummins ISL		$745.00		
400 Hp Cummins ISL In Lieu Of The 330 Hp Cummins ISL		$8,426.00		
450 Hp Cummins ISL In Lieu Of The 330 Hp Cummins ISL		$9,148.00		
68 Galon Fuel Tank in Lieu Of the 50 Gallon (Rear Compartment Depth Will Change)		$166.00		
Weldon Multiplex V-Mux Chassis With Vista Display (Drivers Side)		$4,992.00		
Officer Side V-Mux Vista Display		$1,838.00		
Rear Air Suspension		$1,428.00		
Front Wheel 17" Disc Brakes		$409.00		
Michelin Rear M&S Grip Tires In Lieu Of Highway Read		$250.00		
Auto Tank Drains in Lieu Of Manual Drains		$121.00		
Heated Wet Tank Auto Ejector		$123.00		
Chrome Door Handles And Scuff Plates		$776.00		
Electric Door Locks In Lieu of Manual		$1,102.00		
Power Windows In Lieu Of Manual Roll Up		$2,017.00		
Xtreme Duty Interior In Lieu OF ABS Plastic		$3,530.00		
Stainless Steel Door Panels In Lieu Of Painted Aluminum		$951.00		
Heated Mirrors		$56.00		
Ramco CRM 1750 3HR Bus Style Mirrors		$477.00		
Ramco CRM 310 1350 CHCHR Bus Style Mirrors		$93.00		
Over Head Air Conditioner Unit In Lieu Of the Engine Tunnel Mount		$2,735.00		
CHASSIS UPFIT OPTIONS:				
Front Bumper Extension 8" With Gravel Shield		$1,850.00		
Front Bumper Extension 18-24" With Gravel Shield		$3,700.00		
Front Bumper Extension Hose Well (No Discharge Provided) Requires 18-24" extension)		$550.00		
Vinyl Hose Tray Cover For Bumper Hose Tray		$150.00		
Treadplate Cover For Bumper Hose Tray With Latch		$295.00		
Book / Binder Misc Storage for console		$400.00		
Trailer Hitch - 2" Class 4 receiver (includes 4 way plug)		$990.00		
Seven way trailer plug in lieu of 4 way		$70.00		
Air Horns - Bumper Mounted (Need Bumper Extension)		$960.00		
Wheel Simulators - Phoenix Stainless Steel		$856.00		
Wheel Simulators - Real Wheels Stainless Steel		$876.00		
Automatic Tire Chains - On Spot		$2,595.00		
Automatic Tire Chains - Insta Chain 6 Strand		$2,760.00		
Automatic Tire Chains - Insta Chain 12 Strand		$3,004.00		
Automatic Tire Chains - Rudd 18 Stand		$3,108.00		
EMS Storage Compartment W/ Cargo Net - Rear Facing against Engine Tunnel		$1,332.00		

11 Sperti Drive, Edgewood, KY 41017
(859)331-0360
FAX: (859)331-0399

SUMMIT
Fire Apparatus and Custom Fabricators

DESCRIPTION	QTY	PRICE	STD.	INCLUDED OPT.
CUSTOM CAB HIGHSIDE / LOWSIDE PUMPER		$320,000.00		
EMS Storage Compartment W/ Roll Up Access Door - Rear Facing against Engine Tunnel		$2,570.00		
Engine Tunnel Mounting Tray - Bare Aluminum		$675.00		
Engine Tunnel Mounting Tray - Rubberized Aluminum		$875.00		
Map Storage - Aluminum Angle 3 Slot Engine Tunnel Mount		$680.00		
Command Desk - Pedastol With Storage Mounted Against Engine Tunnel		$2,970.00		
Lighted Bumper Poles (Rookie Rods)		$325.00		
BODY OPTIONS:				
Highside Both Sides		$930.00		
Internal Ladder Storage - Right Side Thru Rear Of Body (Requires HighSide Option)		$1,600.00		
ROM Roll Up Doors In Lieu of Hansen Roll Up Doors		$490.00		
Swing Doors In Lieu of Hansen Roll Up Doors		$520.00		
Hard Suction Storage Troughs - Top Road Side Compartments		$850.00		
Hard Suction Storage Compartment In Hose Bed With Access Door		$1,100.00		
Dual Bottle SCBA Storage In Lieu of Single (Pending on location; Pricing is each)		$150.00		
Rub Rails with Conspicuity Stripe		$670.00		
Folding Steps on Front Of Body (Pair)		$245.00		
Protective TreadPlate Overlay On Front of Compartments		$375.00		
STORAGE OPTIONS:				
Tail Board Mounted "Doughnut" Hose Holder		$695.00		
Adjustable Trays (each)		$200.00		
Adjustable Slide Trays - 300 lb (each)		$555.00		
HD Slide Tray - 600 lb (each)		$650.00		
Plastic Floor Tile compartment floors		$118.00		
Plastic Floor Tile installed on shelf / Tray (each)		$75.00		
Hose Bed Cover - Vinyl Cover		$925.00		
Plastic Floor Tile compartment floors		$118.00		
Plastic Floor Tile installed on 24" shelf / Tray (each)		$75.00		
TANK OPTIONS:				
750 Gallon Tank In Lieu of 1000 Gallon Tank		($800.00)		
Fiberglass 1000 Gallon Tank In Lieu of Poly Tank		$550.00		
Fiberglass 750 Gallon Tank In Lieu of 1000 Gallon Poly Tank		N/C		
PUMPS & PLUMBING:				
Hale 1250 GPM Pump in Lieu of 1000 GPM (2 x2.5" LS, 2 x 2.5" RS, and 3" Deluge)		$1,800.00		

11 Sperti Drive, Edgewood, KY 41017
(859)331-0360
FAX: (859)331-0399

SUMMIT
Fire Apparatus and Custom Fabricators

DESCRIPTION	QTY	PRICE	STD.	INCLUDED OPT.
CUSTOM CAB HIGHSIDE / LOWSIDE PUMPER		$320,000.00		
Hale 1500 GPM Pump In Lieu of 1000 GPM (2 x2.5" LS, 1 x 2.5" RS, 1 x 3" LDH RS and 3" Deluge)		$2,600.00		
Hale 1500 GPM Wide Body Pump In Lieu of 1000 GPM (2 x2.5" LS, 1 x 2.5" RS, 1 x 3" LDH RS and 3" Deluge) Includes Wider Pump House		$11,250.00		
Waterous CSY 1250 GPM in Lieu Of The Hale 1000 GPM (2 x2.5" LS, 2 x 2.5" RS, and 3" Deluge)		$13,540.00		
Waterous CSY 1500 GPM in Lieu Of The Hale 1000 GPM (2 x2.5" LS, 1 x 2.5" RS, 1 x 3" LDH RS, and 3" Deluge)		$14,010.00		
1.5" Trash Line Run to Front Bumper (Must Select Bumper Extension)		$1,100.00		
LDH Discharge on Right Side Pump Panel		$1,900.00		
Right Side 2.5"Suction		$1,325.00		
2.5" Rear Discharge - One (1) Right Hand		$2,100.00		
Hose Well In Pump House Running Board - Includes Velcro Strap		$750.00		
Foam Pro 1600 Includes Foam Cell In Tank (X-Lays Only)		$6,320.00		
Foam Pro 2001 - Single Foam System, Includes Foam Cell In		$7,900.00		
Foam Pro 2001 - Dual Foam System, Includes Two Foam Cells In		$9,800.00		
Foam Pro 2024 - Single Foam System, Includes One Foam Cell In Tank (X-Lays,Trash, One 2-1/2")		$9,720.00		
Foam Pro 2024 - Dual Foam System, Includes Two 20 Gallon Foam Cells In Tank (X-Lays,Trash, One 2-1/2")		$11,160.00		
Foam Pro Uplift System - Single		$2,350.00		
Foam Pro Uplift System - Dual		$4,580.00		
ELECTRIC:				
Kussmaul Battery Conditioner with Auto Eject In Lieu of Polarity Plug		$995.00		
Kussmaul Pump Plus, Battery Conditioner with Auto Eject In Lieu of Polarity Plug		$1,760.00		
Auto Air Eject For House Air Supply		$445.00		
Whelen 900 Series LED In Upper Zones B&D and C in lieu of Beacons		$420.00		
Single Strip LED Strip Compartment Lighting in lieu single LED		$750.00		
Dual Strip LED Strip Compartment Lighting in lieu single LED		$1,620.00		
LED Ground lights under front of body		$240.00		
LED Ground light under front bumper		$180.00		
LED Browlight on front of cab		$1,290.00		
LED Whelen 900 Scene lighting - One (1) on Each Side Rear (2 total)		$740.00		
LED Whelen 900 Scene lighting - Two (2) on Upper Rear		$740.00		
LED Whelen 900 Scene lighting - One (1) on Center Rear		$355.00		

SUMMIT
Fire Apparatus and Custom Fabricators

DESCRIPTION	QTY	PRICE	STD.	INCLUDED OPT.
CUSTOM CAB HIGHSIDE / LOWSIDE PUMPER		$320,000.00		
LED FRC Spectra 900 Scene lighting - One (1) on Each Side (2 total)		$1,060.00		
LED FRC Spectra 900Scene lighting - Two (2) on Upper Rear		$970.00		
120/240 VOLT ELECTRICAL OPTIONS				
5000 W Gasoline Powered Honda Generator - Mounted on slide tray (Elec Start)		$4,200.00		
5000 W Gasoline Powered Generator - Mounted on slide tray (Elec Start)		$2,800.00		
3000 W Baldor Diesel Generator Mounted on slide tray (Elec Start)		$4,200.00		
5500 W Baldor Diesel Generator Mounted on slide tray (Elec Start)		$5,450.00		
120/240 Volt load center with up to 4 breakers & pigtail for genertaor (Gas or Diesel Generators Only)		$750.00		
Fuel Tap from chassis (Diesel)		$610.00		
6 KW Smart Power Hydraulic Generator With Load Center		$11,828.00		
8 KW Smart Power Hydraulic Generator With Load Center		$14,923.00		
10KW Smart Power Hydraulic Generator With Load Center		$15,972.00		
15KW Smart Power Hydraulic Generator With Load Center		$20,321.00		
20KW Smart Power Hydraulic Generator With Load Center		$22,206.00		
Remote Generator Activation From Pump Panel		$250.00		
Exterior Receptacles - Covered Duplex 5-20		$285.00		
Interior 120 Volt Receptacles - Cab, Duplex 5-15		$320.00		
Interior 120 Volt Receptacles - Body Compartrment, Duplex 5-15		$250.00		
220 Volt Receptacle - Body Compartment		$295.00		
Electric Cord Reel - 200' 10/3 Black Cable		$2,180.00		
Electric Cord - 200' 10/3 Yellow Cord In Lieu Of The Black		$180.00		
Electric Cord Ball Stop		$25.00		
Electric Junction Box - Akron With 4 L5-20 Receptacles		$425.00		
Electric Junction Box - Circle D With 4 L5-20 Receptacles		$545.00		
Fair Lead, Cord Reel - Hannay 4 Way		$180.00		
Sumit Extendible or Swing Out Fair Lead		$340.00		
Junction Box Mounting Bracket - Aluminum		$150.00		
Side Mount Push-Up Lights - Akron ELNB-750-Pod 120Volt, 750 Watt Lights (Per Pair)		$1,665.00		
Side Mount Push Up Lights - FRC FCA530-S75 120 Volt 750 Watt Lights (Per Pair)		$1,632.00		
Side Mount Push Up Lights - FRC FCA530-M10 1000 Watt Lights (Per Pair)		$1,745.00		
Side Mount Push Up Lights - FRC FCA530-M12 240 Volt, 1000 Watt Lights (Per Pair)		$1,832.00		

Fire Apparatus and Custom Fabricators

DESCRIPTION	QTY	PRICE	STD.	INCLUDED OPT.
CUSTOM CAB HIGHSIDE / LOWSIDE PUMPER		$320,000.00		
Side Mount Push Up Lights - FRC OPA530-S75 120 Volt 750 Watt Lights (Per Pair)		$1,685.00		
Side Mount Push Up Lights - FRC OPA530-M10 1000 Watt Lights (Per Pair)		$1,847.00		
Side Mount Push Up Lights - FRC OPA530-M12 240 Volt, 1000 Watt Lights (Per Pair)		$1,910.00		
PAINT:				
Two Tone Chassis - Custom Cab MFD		$3,550.00		
Two Tone Chassis - Custom Cab LFD		$3,620.00		
Painting Jambs in addition to paint (4 Door)		$1,200.00		
Two Tone Body		$2,550.00		
Body Undercoating		$415.00		
Painted Steel Wheels to Job Color		$460.00		
STRIPING & LETTERING:				
NFPA Perimeter Stripe 4"		$642.00		
1- 4 -1 NFPA Perimeter Stripe 4" with 1" stripe above and below		$792.00		
Z pattern in stripe		$130.00		
Sixty (60) 3" Reflective Lettering		$705.00		

11 Sperti Drive, Edgewood, KY 41017
(859)331-0360
FAX: (859)331-0399

CUSTOM DESIGN IS OUR SPECIALTY, QUALITY IS OUR COMMITMENT!

11 Sperti Drive Edgewood, KY 41017 (859) 331-0360 www.SummitFireApparatus.com

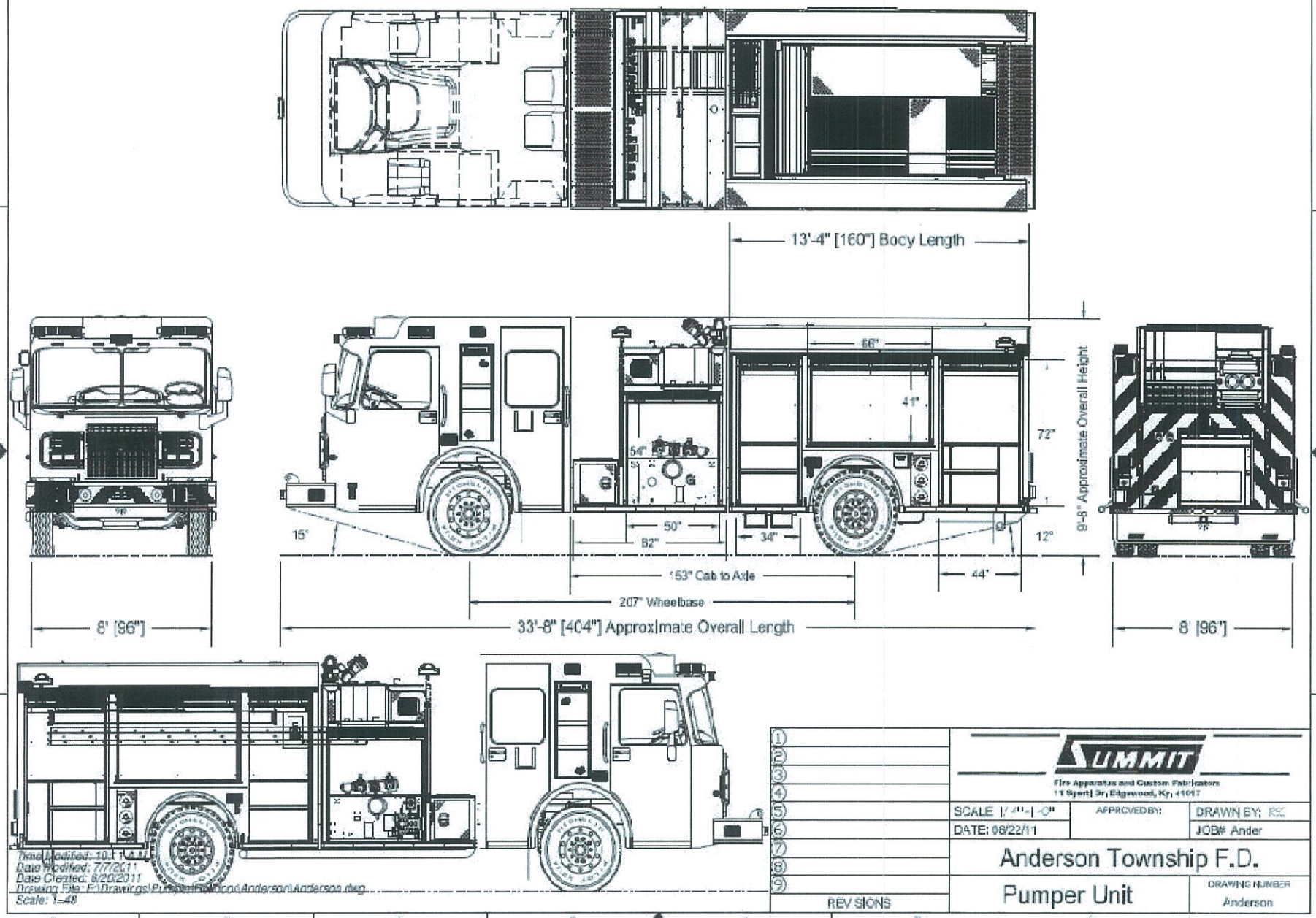
13'-4" [160"] Body Length
66"
41"
72"
9'-8" Approximate Overall Height
54"
15°
50"
82"
34"
12°
153" Cab to Axle
44"
207" Wheelbase
33'-8" [404"] Approximate Overall Length
8' [96"]
8' [96"]
Time Modified: 10:11:11
Date Modified: 7/7/2011
Date Created: 8/20/2011
Drawing File: F:\Drawings\Proposal\Pond\Anderson\Anderson.dwg
Scale: 1=48
REVISIONS
SUMMIT
Fire Apparatus and Custom Fabricators
11 Spert| Dr, Edgewood, Ky, 41017
SCALE 1/4"=1'-0"
APPROVED BY:
DRAWN BY: RSC
DATE: 08/22/11
JOB# Ander
Anderson Township F.D.
Pumper Unit
DRAWING NUMBER
Anderson

Fire Apparatus and Custom Fabricators

DESCRIPTION	QTY	PRICE	STD.	INCLUDED OPTIONS
ANDERSON STAINLESS STEEL PUMPER		$507,200.00		
CHASSIS				
Spartan Chassis	1			
Model - Metro Star				
Summit Fire (SUM1001)				
Model Year - 2014				
Country of Service United States Of America				
Apparatus Type Pumper				
Vehicle Type Straight Truck				
Axle Configuration 4x2 (Rear Axle Drive Only)				
GAWR Front 20000#				
GAWR Rear 24000#				
Pump Provision Driveline Midship				
Cab Style MFD 10" Raised Roof				
Occupant Protection Advanced Protection System				
Cab Frt Fascia Classic				
Cab Frt Grille Hinged Classic Styled				
Cab Undercoat				
Cab Side Drip Rail				
Cab Paint Exterior Single Color				
Cab Paint Manufacturer PPG				
Cab Paint Primary/Lower Color PPG Red FBCH 71371 ALT				
Cab Paint Warranty 2014 (10) Year/100,000 Miles				
Cab Paint Int Zolatone Silver Gray				
Cab Entry Doors (4)				
Cab Entry Door Type Full Length				
Cab Insulation				
Cab Structural Warranty 2014 (10) Year/100,000 Miles				
Cab Test Information Crash Test ECE-R29/SAE J2420/SAE J2422				
Elec System 12V DC				
Data Recording Sys Vehicle Data Weldon w/Remote USB Data Link				
Accessory Pwr & Gnd Stud 40A Batt Dir & 15A Ign Sw				
Aux Acc Pwr & Gnd Stud Bhd Sw Pnl 40A Mstr Sw				
Addl Acc Pwr & Gnd Stud Bhd Sw Pnl 40A Batt Dir				
Extra Acc Pwr & Gnd Stud Bhd Off Seat 40A Batt Dir 2' Loop				
Exterior Electrical Terminal Coating Spray On Plasti Dip				
Engine Diesel 400HP Cummins ISL9 - EPA 2013				
Cab Engine Tunnel Small/Medium				
DPF Ctrl Regeneration Sw & Inhibit Sw				
Engine Programming High Idle Speed 1250 RPM				

Fire Apparatus and Custom Fabricators

DESCRIPTION	QTY	PRICE	STD.	INCLUDED OPTIONS
ANDERSON STAINLESS STEEL PUMPER		$507,200.00		
Engine High Idle Ctrl Manual				
Engine Programming Road Speed Governor Enabled				
Aux Engine Brake Compression Brake w/VG Turbo				
Aux Engine Brake Ctrl On/Off & Low/Med/High Sw Pnl				
Elec Engine Oil Level Indicator				
Fluid Fills Fwd For Med Displacement Cap				
Engine Drain Plug				
Engine Warranty Cummins (5) Year/100,000 Miles				
Rmt Throttle Harness PSG Fire Rsrch In Control 300/400 Top Mnt				
Engine Program Rmt Throttle Off				
Engine Programming Idle Speed 700 RPM				
Engine Fan Drive Clutch Engaged in Pump Mode				
Engine Cooling Sys Serial Flow Medium				
Engine Cooling System Protection Light Duty Skid Plate				
Engine Coolant Extended Life				
Engine Coolant Filter				
Elec Low Coolant Level Indicator				
Engine Pump Heat Exchanger				
Coolant Hoses Silicone Heater & Radiator w/Cab Int Rubber Hoses				
Engine Air Intake Filtration and Restriction w/Replaceable Element				
Air Intake Protection Light Duty Skid Plate				
Eng Exhaust Sys Under Frm RH Outboard w/DPF/SCR Inline				
Diesel Exhaust Fluid Tank LH 6 Gal Fill Thru Rr Step				
Engine Exh Acc Exh Temp Mitigation				
Engine Exhaust Wrap				
Transmission Allison 3000 EVS				
Transmission Mode Programming 4th Startup/5th Mode				
Transmission Feature Programming Allison Gen V-E I/O Package 198/Pumper				
Transmission GEN V-E Shift Sel Key Pad/Push Button				
Elec Transmission Oil Level Indicator				
2nd Gear Pre-Select				
Transmission Cooling System				
Transmission Drain Plug				
Transmission Warranty Allison (5) Year				
Driveline Spicer 1710 HD				
Midship Pump Jackshaft Only				
Midship Pump/Gearbox Model Hale QMAX				
Midship Pump Gearbox Drop Hale "L"				
Midship Pump Ratio 2.28:1 (23)				

11 Sperti Drive, Edgewood, KY 41017
(859)331-0360
FAX: (859)331-0399

SUMMIT
Fire Apparatus and Custom Fabricators

DESCRIPTION	QTY	PRICE	STD.	INCLUDED OPTIONS
ANDERSON STAINLESS STEEL PUMPER		$507,200.00		
Midship Pump Location C/L Suction to C/L Rear Axle 98.5"				
Fuel Filter/Wtr Separator Racor S3238 w/Lt & Alarm				
Fuel Lines Nylon				
Electric Fuel Primer Engine Sply Electric Lift Pump				
Fuel Tank 50 Gallon SS w/SS Straps				
Fuel Tank Fill Port LH Mid/RH Fwd				
Frt Axle Meritor MFS 20000# Beam				
Front Axle Warranty Meritor 2014				
Frt Wheel Bearing Lube Oil				
Frt Shock Absorbers Bilstein				
Frt Suspension 9 Leaf 20000-21500#				
Steering Column/Wheel Tilt/Telescopic 18" 4 Spoke				
Power Steering Pump TRW				
Elec Power Steering Fluid Level Indicator				
Front Axle Cramp Angle 48L/44R Degrees				
Power Steering Gear TRW TAS 65 w/Assist				
Chassis Alignment				
Rear Axle 24000# Meritor RS-24-160				
Rear Axle Warranty Meritor 2014				
Rear Axle Differential Lubrication Oil				
Rear Wheel Bearing Lubrication Oil				
Vehicle Top Speed 65 MPH				
Rear Susp Reyco 79KB Spring 21000-31500# Conventional				
Frt Tire 385/65R 22.5 Michelin XFE				
Rear Tire 11R 22.5 Michelin XDN2				
Rear Axle Ratio 5.38				
Frt Wheel Accuride 22.5 x 12.25 Steel				
Rr Whl Accuride 22.5 x 8.25 Steel				
Wheel Paint Primary/Lower Cab Color Outer Only				
Wheel Trim Hub & Nut Covers SS Shiploose				
Aux Lubrication System SKF LH Rail				
Brake System ABS/ATC/ESC Sgl Axle				
Frt Brakes S-Cam Drum 16.5" x 6"				
Rr Brakes S-Cam Drum 16.5" x 7"				
Prk Brake Rr Wheels Only				
Prk Brake Ctrl Ctr Dash Mnt				
Frt Brake Slack Adjusters Meritor				
Rr Brake Slack Adjusters Meritor				
Air Dryer Wabco System Saver 1200 Bhd LH Batt Box				
Frt Brake Chambers MGM Type 30				

11 Sperti Drive, Edgewood, KY 41017
(859)331-0360
FAX: (859)331-0399

Fire Apparatus and Custom Fabricators

DESCRIPTION	QTY	PRICE	STD.	INCLUDED OPTIONS
ANDERSON STAINLESS STEEL PUMPER		$507,200.00		
Rr Brake Chambers TSE 30/30				
Air Compressor Wabco SS318 18.7 CFM				
Air Governor Mnt on Air Dryer Bracket				
Aux Air Reservoir 1200 Cu In				
Moisture Ejectors w/Cable				
Air Sply Lines Nylon				
Rear Air Tank Mnt Any Bhd Rear Axle Perpendicular w/Frame				
Wheelbase 207.0"				
Rear Overhang 51.0"				
Frame Double Channel 35.00" Width				
Frame Warranty Lifetime 2014				
Frame Clear Area Outside Rail 30" Rwd Back of Cab				
Frame Paint Powder Coat Black				
Frt Bumper Stainless Steel Flat				
Frt Bumper Extension Length 21"				
Frt Bumper Extension Frame Width 48.25"				
Frt Bumper Reinforcement Steel Plate				
Air Horn (2) 24" Round Grover				
Air Horn Location (2) Thru Bumper				
Air Horn Reservoir (1) 1200 Cu In				
Frt Bumper Tow Eyes 2" Chrome Above				
Cab Tilt System				
Cab Tilt Limit Sw				
Cab Tilt Ctrl Receptacle Temp				
Cab Tilt Lock Down Indicator				
Cab Windshield				
Glass Frt Dr Roll Down/XDuty Regulator				
Glass Tint Frt Dr Automotive Green				
Glass Rr Dr RH Roll Down/XDuty Regulator				
Glass Tint Rr Door RH Automotive Green				
Glass Rr Dr LH Roll Down/XDuty Regulator				
Glass Tint Rr Door LH Automotive Green				
Glass Side Mid RH Fxd 16"W x 26"H				
Glass Tint Side Mid RH Automotive Green				
Glass Side Mid LH Fxd 16"W x 26"H				
Glass Tint Side Mid LH Automotive Green				
Climate Ctrl Htr Defroster A/C Ovrhd Painted Alum				
Climate Control Drain Gravity w/Venturi Assist				
Climate Ctrl Actv Rotary Dash Mnt LH				
HVAC Overhead Cover Paint Zolatone Silver Gray				

11 Sperti Drive, Edgewood, KY 41017
(859)331-0360
FAX: (859)331-0399

Fire Apparatus and Custom Fabricators

DESCRIPTION	QTY	PRICE	STD.	INCLUDED OPTIONS
ANDERSON STAINLESS STEEL PUMPER		$507,200.00		
A/C Condenser Location Roof Mnt Fwd Ctr				
A/C Compressor Large Capacity				
Under Cab Insulation Engine Tunnel				
Interior Trim Floor				
Interior Trim Vinyl				
Rear Wall Interior Trim Vinyl				
Header Trim XDuty				
Trim Center Dash XDuty				
Trim LH Dash XDuty				
Trim RH Dash XDuty Glove Cmpt/MDT Prov				
Trim RH Dash Acc XDuty Dash Slide-Out Tray				
Eng Tnl Trim Flr Mat				
Step Trim Grip Strut Lwr Flex-Tred Mid				
Step Trim Kickplate Treadplate				
Under Cab Access Door Rear Step LH Tread Plate				
Interior Door Trim (2) Piece 14 Gauge Brushed SS				
Door Trim Customer Nameplate				
Cab Dr Trim Reflective Vert Stripe/6" Chevron w/Logo				
Interior Grab Handle 'A' Pillar 11" Molded				
Interior Grab Handle Frt Door Horiz 9"				
Int Grab Handle Rr Dr Alum Window Span 30" Black Powder Coat				
Interior Trim Vinyl Color Gray				
Interior Trim Sunvisor Tinted				
Interior Floor Mat Color Gray				
Header Trim Interior Paint Zolatone Silver Gray				
Trim Center Dash Interior Paint Zolatone Silver Gray				
Trim LH Dash Interior Paint Zolatone Silver Gray				
Trim RH Dash Interior Paint Zolatone Silver Gray				
RH Dash Acc Interior Paint Zolatone Silver Gray				
Dash Pnl Group 3-Pnl				
Switches Ctr Pnl 6 Upr LH				
Switches Left Pnl 9 (6+3) w/Headlight/Dimmer/Wiper				
Switches Right Pnl 8 (4+4) LH				
Seat Belt Warn Indv Seat Loc & LED Display w/VDR Weldon				
Seat Material Vinyl				
Seat Color Gray/Red Seat Belts				
Seat Back Logo Spartan Chassis				
Seat Driver Seats Inc 4-Way Air Non-ABTS				
Seat Back Driver Non-SCBA Non-ABTS				
Seat Mounting Driver				

11 Sperti Drive, Edgewood, KY 41017
(859)331-0360
FAX: (859)331-0399

Fire Apparatus and Custom Fabricators

DESCRIPTION	QTY	PRICE	STD.	INCLUDED OPTIONS
ANDERSON STAINLESS STEEL PUMPER		$507,200.00		
Occupant Protection Driver Advanced Protection System				
Seat Officer Seats Inc Battalion Fixed ABTS				
Seat Back Officer Non-SCBA ABTS				
Seat Mounting Officer				
Occupant Protection Officer Advanced Protection System				
Seat Belt Orientation Crew Outboard Shoulder To Inboard Hip				
Seat FFC Location (2) Ctr				
Seat Crew FFC Seats Inc Battalion Flip-Up				
Seat Back FFC Non-SCBA ABTS				
Occupant Protection FFC Advanced Protection System				
Seat Frm Fwd Fcg Dual				
Seat Frm Fwd Fcg Strg Acc Dr (2) R/L Sd				
Seat Mounting Forward Facing Center				
Cab Frt Undrst Strg Acc Dr				
Seat Compartment Door Finish Zolatone Silver Gray				
Windshield Wiper System Single Motor Prk Brk Interlock				
Electronic Windshield Fluid Level Indicator				
Cab Door Hardware Chrome w/Scuff Plate				
Door Locks Manual				
Grab Handles SS 18"				
Mirror Bus Style Ramco 6015-FFHR-750HR Rmt Htd				
Rearview Mirror Heat Sw Pnl				
Trim Rear Wall Exterior Treadplate				
Cab Fender SS				
Cab Ext Frt & Side Emblems w/Side Emblem Integrated Model Nameplate				
Cab Exterior Model Nameplate Metro Star Advanced Protection System w/Emblem				
Ign Mstr Sw w/Keyless Start				
Batt (6) Group 31 Harris				
Batt Tray (2) R/L Steel				
Batt Box Cover (2) Steel w/Black Handles				
Batt Cables				
Batt Jumper Stud Frt LH Lwr Step				
Alternator Leece-Neville 270A				
Headlights 4 Headlamps Halogen				
Frt Turn Signals Whelen 600 LED				
Headlights Below Frt Warn Lts				
Side Turn/Marker Lts LED				
Marker & ICC Lts Face Mnt LED				

11 Sperti Drive, Edgewood, KY 41017
(859)331-0360
FAX: (859)331-0399

Fire Apparatus and Custom Fabricators

DESCRIPTION	QTY	PRICE	STD.	INCLUDED OPTIONS
ANDERSON STAINLESS STEEL PUMPER		$507,200.00		
Hdlt & Mrkr Lt Actv Rkr Sw/DRL				
Ground Lts Resp Dr & Rkr Sw				
Step Lts				
Engine Cmpt Work Lt (2)				
Interior Overhead Lts Weldon				
Aux Dome Lt Rr Crew Clear LED Ctr Rr Dr Actv/Dr Pnl Rkr Sw Actv				
Do Not Move App Lt Flashing Red Whelen 500 5mm LED w/Alarm				
Mstr Warn Sw Pnl				
Headlight Flasher Alternating				
Headlight Flasher Sw Pnl				
Inboard Frt Warn Lts Whelen 600 Super LED Chrm Bezel				
Inboard Frt Warn Lts Color Red				
Frt Warn Sw Pnl				
Horn Btn Sel Sw Elec Horn/Air Horn				
Air Horn Actv Strg Whl/PB Sw Pnl				
Back-Up Alarm Ecco 575				
Instrumentation Standard				
Backlighting Color Red				
Aux Speedometer Analog				
Panel Layout				
Cab Exterior Protection Front				
Fire Extinguisher Ship Loose				
Door Keys for Manual Locks (4)				
Diagnostic Software Occupant Protection Advanced Protection System				
Warranty Cab and Chassis 2014 (2) Year				
Chassis Operation Manual Digital Copy (2)				
Eng & Trans Operation Man Eng Hard Copy/Trans Digital/Eng Owner Digital				
Engine Service Manual Hard Copy Cummins ISC/ISL (2)				
Transmission Service Manual Hard Copy Allison 3000 EVS (2)				
Cab/Chassis As Built Wiring Diagrams Digital Copy (2)				
Sales Terms				
End of Frame Cross Member				
CHASSIS UPFIT				
Chassis Steps - Factor Custom Cab	1		x	
Grab Handles, Cab - Provided By Chassis Manufacturer	1		x	

SUMMIT
Fire Apparatus and Custom Fabricators

DESCRIPTION	QTY	PRICE	STD.	INCLUDED OPTIONS
ANDERSON STAINLESS STEEL PUMPER		$507,200.00		
LH Cab Side EMS Compartments - One Exterior (1) Compartment Between Drivers Door and Rear Crew Door.	1			x
LH Cab Side EMS Compartments - Exterior ROM Roll Up Access Door	1			x
LH Cab Side EMS Compartments - Internal Access Door	1			x
LH Cab Side EMS Compartments - Ruberized Spray Coated (grey)	1			x
LH Cab Side EMS Compartments - LED Strip Light - TecNiq	1			x
LH Cab Side EMS Compartments - Adjustable Shelf	1			x
RH Cab Side EMS Compartments - One Exterior (1) Compartment Between Officers Door and Rear Crew Door.	1			x
RH Cab Side EMS Compartments - Exterior ROM Roll Up Access Door	1			x
RH Cab Side EMS Compartments - Internal Access Door	1			x
RH Cab Side EMS Compartments - Ruberized Spray Coated (grey)	1			x
RH Cab Side EMS Compartments - LED Strip Light - TecNiq	1			x
RH Cab Side EMS Compartments - Adjustable Shelf	1			x
Additional Cab Storage - Two Additional Storage Compartment, One Over Each Side EMS Compartments. Rubberized & Provided With Cargo Net Access Cover	2			x
Engine Cowl Storage Tray - Rubberized Aluminum Tray Over Engine Cover	1			x
Arm Rest Drivers Side - Mounted on Engine Cowl Tray	1			x
Cup Holders - Two (2) Cupholder To Be Installed On each Side Of Engine Cowl Tray.	2			x
Bumper Extension Gravel Shield - Treadplate Aluminum 21"	1			x
Front Bumper Extension Hose Wells - Two (2) One Each Side Of Winch	2			
Winch, Front Bumper Fixed Mount - Warn M-12000	1			x
Winch Access Door - TreadPlate Aluminum In Gravel Shield (D Ring Latch)				
Winch Remote - 30 Foot	1			x
Winch Fairlead - Polished 4 Way	1			x
Air Horn Install - Factroy Shipped Air Horns Installed Thru Bumper	1			x
Exhaust Pipe - Right hand Ahead Of Rear Axle	1		x	
Rear Tow Eyes - Painted Steel (Under Tailboard)	2		x	
Rear Receiver Hitch - 2" Class III	1			x
Trailer Plug - Pollak 12-705	1			x
Vehicle Data Recorder - Weldon	1		x	
Seatbelt Warning System - Weldon	1		x	

Fire Apparatus and Custom Fabricators

DESCRIPTION	QTY	PRICE	STD.	INCLUDED OPTIONS
ANDERSON STAINLESS STEEL PUMPER		$507,200.00		
Automatic Tire Chains - Rudd 18 Link	1			x
Wheels - Painted (Factory Color)	1		x	
Wheel Trim - Delete	1		x	
Tire Pressure Monitoring System - Valve Stem Indicators	6		x	
Front Mud Flaps	1		x	
Rear Mud Flaps - Full Width	1			x
Fluid Identifcation Plate	1		x	
Fuel Type Label - Diesel	1		x	
Seating Label - Maximum Seating Of 2	1		x	
Vehicle Height Label	1		x	
Seatbelt Warning Label	1		x	
Riding On Step Warning Label - Rear of Body	1		x	
Helmet In Cab Warning Label	1		x	
NFPA Helmet Storage - Four H.O Bostrom Provided Loose	1			x
Chassis Air Fill Connection - Drivers Pump Panel	1			x
BODY - Stainless Steel Notch Back Style Pumper				
Body Construction - Combination Formed Sheet / Structural Tubing	1		x	
Body Subframe - Stainless Structural Tubing	1		x	
Material - 14 gauge 304 stainless steel	1		x	
Body Mounting	1		x	
Polymer Isolation Strips - Chassis Frame	2		x	
Construction - All Stainless Steel With Aluminum Treadplate Trim	1		x	
Body Dimensions - 160" Long, 86" High, 96" Wide	1		x	
Compartment Interiors - Unfinished Stainless	1		x	
Compartment Floors - Raised Sweep-out Type	1		x	
Rear Drop For Tailboard - Steel	1		x	
Rear Tail Board - 14 inch Notch Back Design Punch Raised Aluminum Treadplate	1		x	
Fenderettes - Polised Stainless Steel	2		x	
Wheel Well Liners - Full Removable Poly Liners	2		x	
Fixed Compartment Shelves - Four (4) Each Full Height Compartment	4		x	
Corrosion Protection Pkg - Anti Corrosion Compound and Nylon Spacers on All Fasteners	1		x	
Hose Bed - Divided Stainless Steel With Raised Capacity				
Hose Bed - Aluminum Extruded Floor	1		x	
Hose Bed Access Step - Full Width	1		x	
COMPARTMENTATION				

11 Sperti Drive, Edgewood, KY 41017
(859)331-0360
FAX: (859)331-0399

Fire Apparatus and Custom Fabricators

DESCRIPTION	QTY	PRICE	STD.	INCLUDED OPTIONS
ANDERSON STAINLESS STEEL PUMPER		$507,200.00		
9-Bay With Rear Compartment Partially Transverse	1		x	
L1 Pump House Compartment Dimensions - 50" Wide x 54" High x	1		x	
L2 Compartment Dimensions - 34" Wide x 72" High x 25" Deep Lower, 14" Upper	1		x	
L2 Adjustable Shelf Hard ware - Stainless Lower Compartment Only	4			x
L3 Compartment Dimensions - 66" Wide x 41" High x 25" Deep	1		x	
L3 Adjustable Shelf Hard ware - Delete	1			x
L4 Compartment Dimensions - 44" Wide x 72" High x 25" Deep	1		x	
L4 Adjustable Shelf Hard ware - Stainless Lower Compartment Only	4			x
R1 Pump House Compartment Dimensions - 50" Wide x 54" High x Transverse	1		x	
R2 Compartment Dimensions - 34" Wide x 72" High x 25" Deep Lower, 14" Upper	1		x	
R2 Adjustable Shelf Hard ware - Stainless Lower Compartment Only	4			x
R3 Compartment Dimensions - 66" Wide x 41" High x 25" Deep	1		x	
R3 Adjustable Shelf Hard ware - Delete	1		x	
R4 Compartment Dimensions - 44" Wide x 72" High x 25" Deep	4		x	
R4 Adjustable Shelf Hard ware - Stainless Lower Compartment Only	1			x
Rear Center Compartment - Dimensions 38" Wide x 38" High x 28" Deep. (No Wall Dividers Between L4 And R4)	1		x	
Adjustable Shelf Hardware, Rear Compartment- Delete	1		x	
Compartment Doors - ROM Roll Up Doors	9			x
Door Finish - Brushed	1		x	
Top Seal - Drip Rail With Wiper	9		x	
Internal Drip Pans - Delete	1		x	
Door Locks - Delete	1		x	
BODY UPFIT				
SCBA Storage Compartments (L5 And R5) - Storage For 3 Cylinder Holders With Scuff Protection For 60 Min Breathing Air Bottles	2			x
Ladder / Backboard / Hard Suction Storage Compartment, Fully Enclosed In Expanded Hose Bed Area, Ladders. Hose & Basket Mounted Horizontally	1			x
Ladder / Backboard / Hard Suction Storage Compartment Access Door - Aluminum Treadplate Right Hinge	1			x

11 Sperti Drive, Edgewood, KY 41017
(859)331-0360
FAX: (859)331-0399

SUMMIT
Fire Apparatus and Custom Fabricators

DESCRIPTION	QTY	PRICE	STD.	INCLUDED OPTIONS
ANDERSON STAINLESS STEEL PUMPER		$507,200.00		
Cribbing Storage Compartment - In Expanded Hose Bed Area	1			x
Cribbing Storage Compartment Access Door - Hinge Down	1			x
Hose Bed Dividers - Adjustable Aluminum	2			x
Hose Bed Cover - ROM Roll Up	1			x
Cat Walks Above Exterior Compartments - NFPA Treadplate Aluminum	2		x	
Rub Rails - Aluminum Extruded	1			x
Tool Mounting Boards - Aluminum Rear Wall High Side Compartments	6			x
Plastic Floor Tiles - Floors	1			x
Aluminum Adjustable Shelves	4			x
Plastic Floor Tiles - Shelves	1			x
Rear Horizontal Grab Rail - Knurled, LED Lighted	1			x
Rear Vertical Grab Rail - Two (2) 30 inch Knurled	2		x	
SCBA Brackets - Shipped Loose	4			x
Front Folding Steps - Cast Aluminum One Each Side Of Top Mount Step Well	2			x
Rear Hosebed Access Steps - Cast Aluminum Folding Steps	4			x
Cast Aluminum Fuel Housing With Door	1			x
PUMP				
Pump - Hale 1500 GPM	1		x	
Gearbox - In Cab Pneumatic Shift	1		x	
Pump Shift Overide - Driverside Pump Panel	1			x
Pump Seals - Mechanical	1		x	
Priming Pump - Trident Air	1			x
Auxillary Cooler / Heat Exchanger - Pump/Engine Circulator	1		x	
Intake Relief Valve - Pressure Relief Valve	1		x	
Master Drain - Inside L1 Compartment Opening on Lower Pump Panel	1		x	
Drains - Quarter Turn Valves Drivrs and Offciers Side Pump Panel	12		x	
Thermal Releif Valve - With Indicator and Buzzer	1			x
Cooling Line - 5/8"	1			x
Plumbing - Stainless Steel & High Pressure Hose	1		x	
Valves - Hale Stainless Series Quarter Turn	1		x	
Pump Anode - One	1			x
Pump Test - Manufacturer Class A NFPA 1901	1		x	
Suction Releif - Terminate Below Pump House Away From Work Area	1			x
Steamer Inlets - 6"	1		x	

SUMMIT
Fire Apparatus and Custom Fabricators

DESCRIPTION	QTY	PRICE	STD.	INCLUDED OPTIONS
ANDERSON STAINLESS STEEL PUMPER		$507,200.00		
6" Mechanical Intake Valves (MIV) - Electric	2			x
MIV Electric Contol - Toggle Switch Operation With Indicators	2			x
Side MIV on Left Side	1			x
Steamer Caps - Delete	1			x
Left Side Auxillary Intake - (1) 2.5" Aux Intake	1		x	
Left Side Auxillary Intake Control - Electric	1			x
Left Side Auxillary Intake Termination - Chrome Plug and Chain	1		x	
Right Side Auxillary Intake - Delete	1		x	
Right Side Auxillary Intake Control - Delete	1		x	
Right Side Auxillary Intake Termination - Delete	1		x	
Pump Module - Full Width Self-Supported Structure Independent of Body w/ Roll Up Door Access Each Side	1			x
Pump Module To Body Flex Joint	1		x	
Pump Module - Open View (Exposed Pump For Easier Maintenance)	1			x
Pump Module Construction - Stainless Steel Construction	1		x	
Pump Control Panel - Top Mount Control	1		x	
Walkway - Punch Raised Treadplate Aluminum	1			x
Under Walkway Storage Compartments (Swing Door) - One On Each Side	2			x
Dunnage Storage Area - Delete	2		x	
Hose Well In Running Board - Passenger Side	2		x	
Grab Handles - Two (2) Mounted to Module, One On Each Side	2		x	
Top Mount Pump Panel - Stainless Steel	1			x
Side Pump Panels - Partial Stainless Steel	2			x
Valve Controls - Top Mount Locking	13			x
Pressure Gauges - 2.5" Class One Line Gauges	2		x	
Flow Minders - Class 1, Foam Capable Discharges Only	6			x
Master Gauges - Delete	1		x	
Pressure Governor - Fire Research INCONTROL PSG / Pump Monitor	1			x
Class 1 Enfo IV Master Engine Gauge Monitor	1			x
Pump Hour Meter	1			x
Water Level Gauge - Class One 1 ITL	1		x	
U.L. Test Ports	1		x	
Data Plate - Driver Side Pump Panel	1		x	
Labels - All Intakes, Discharges, Drains & Gauges NFPA Labeled & Color Coded	1		x	
Tank To Pump Valve - 3.5" 1/4 Turn Ball Valve	1		x	
Tank Fill Valve - 1.5" 1/4 Turn Ball Valve	2		x	

Fire Apparatus and Custom Fabricators

DESCRIPTION	QTY	PRICE	STD.	INCLUDED OPTIONS
ANDERSON STAINLESS STEEL PUMPER		$507,200.00		
Auxiliary Tank Fill - Drivers Pump Panel (Garden Hose)				
Left Side Discharges - Two (2) 2.5"	2		x	
Left Side Discharge Control - Top Mount Locking	2		x	
Left Side Discharge Termination - 2.5" Chrome Cap With Chain	2		x	
Right Side Forward Discharge - One (1) 2.5"	1		x	
Right Side Forward Discharge Control - Top Mount Locking	1		x	
Right Side Forward Discharge Termination - 2.5" Chrome Cap With Chain	1		x	
Right Side Rearward Discharge - One (1) 3"	1			x
Right Side Rearward Discharge Control - Top Mount Locking	1			x
Right Side Rearward Discharge Termination - 3"- 5" Storz with Plug and Chain	1			x
Rear Left Discharges - Two (2) 2.5" 1/4 Turn Ball Valve	2			x
Rear Leftside Discharge Control - Top Mount Locking	2			x
Rear LeftSide Discharge Termination - 2.5" Chrome Cap With Chain	2			x
Rear Right Right Discharges - Delete	1		x	
Rear Right Side Discharge Control - Delete	1		x	
Rear Right Side Discharge Termination - Delete	1		x	
Deluge Discharge - 3" Plumbed To Top Of Pump House	1			x
Deluge Contol - Top Mount Locking	1			x
Deluge Monitor - Akron 3440 Deckmaster	1			x
Crosslays- (2) 1.75" - Above Pump Module	2		x	
Crosslay Controls - Top Mount Locking	2		x	
Crosslays- 2.5" - Above Pump Module	1			x
Crosslay 2.5" Controls - Top Mount Locking	1			x
Crosslay Hose Security - Full Vinyl With Buckle Fastening Left & Right Side	1		x	
Crosslay Hose Bed Cover - An Aluminum Bifold Crosslay Cover Shall Be Installed	1			x
To Door Lights)	1		x	
Foam System - Foam Logix 3.3	1		x	
Foam Discharges - two (2) 2.5" rear discharges, (1) 2.5" Crosslay, (2) 1 ¾" Crosslays and the (1) 1 ¾" hose well located in front bumper.	6			x
Foam Control - Top Mount Operators Panel	1			x
Foam Flush Control - Driver Side Pump Panell	1			x
Foam Strainer Clean Out - Drivers Side Pump Panel				
Foam Up Load System - Foam Pro	1			x
Auxiliary Air Horn Button - Top Mount Pump Panel	1			x

Fire Apparatus and Custom Fabricators

DESCRIPTION	QTY	PRICE	STD.	INCLUDED OPTIONS
ANDERSON STAINLESS STEEL PUMPER		$507,200.00		
TANK	1		x	
Booster Tank - UPF Poly 500	1		x	
ISO Certification - 9001:2008	1		x	
Construction - Pt3 Polypropylene	1		x	
Closed Curve Baffling	1		x	
Fill Tower W/Cover - Center Mount	1		x	
Vent Overflow - 4 Inch	1		x	
Sump	1		x	
3" Npt Threaded Outlet Bottom Of Sump	1		x	
Foam Cell - 50 Gallon	1			x
Foam Drain - Driver Side Pump Panel	1			x
12 VOLT ELECTRICAL REQUIRMENTS	1		x	
12 Volt Elctrical System - Multiplex System	1		x	
Wiring Requirments - NFPA 1901	1		x	
SAE Practices & FMVSS Compliant	1		x	
Wiring - GXL Stranded Copper	1		x	
12V Dc Voltage Output Testing & Documentation	1		x	
Switch Panel - Cab mounted - One Master Switch Warning System	1		x	
Reserve Capacity Test:	1		x	
Alternator Performance Test At Idle:	1		x	
Alternator Performance Test At Full Load:	1		x	
Low Voltage Alarm Test:	1		x	
Documentation - NFPA Test Results	1		x	
Battery Disconnect Switch - Supplied Chassis Manufacturer	1		x	
Battery Light - Green L.E.D. Dash Mounted	17		x	
Clearance / Marker Lights - Tecniq P2 L.E.D	1		x	
Auxiliary - Marker Light - LED Rear Wheel Well	2		x	
License Plate Bracket and Light - Arrow Brand L.E.D.	2		x	
Auxiliary - Marker Light - Britax L427.203 Lower Rear Body	2			x
Brake Lights, - Whelen 600 series Red L.E.D.	2		x	
Turn Lights - Whelen 600 Series Amber L.E.D.	2		x	
Backup Lights - Whelen 600 Clear L.E.D.	2		x	
Light Cluster Housing - Chrome	1		x	
Third Brake Light - Center Mount - Whelen 600 Series L.E.D	1		x	
Engine Compartment Light - 4" L.E.D.	2		x	
Ground Area Lighting 4 Door Cab, Intermediate Step - 4" L.E.D Suppiled	1		x	
Ground Area Lighting 4 Door Cab Under Bottom Step - 4" L.E.D	1		x	
Ground Area Lighting Body - Tecniq L.E.D (2 x Pump house, 4 x Body, 2 x TailBoard	8			x

Fire Apparatus and Custom Fabricators

DESCRIPTION	QTY	PRICE	STD.	INCLUDED OPTIONS
ANDERSON STAINLESS STEEL PUMPER		$507,200.00		
Compartment Lighting - Vista Strip Lighting (Both Sides Of Compartment Opening)	1		x	
Compartment Ajar Light - Weldon LED	1		x	
Low Voltage Alarm	1		x	
Battery Conditioner W/ Air Pump - Kussmaul Pump Plus 35/10 with 120 Volt Air Pump	1			x
Battery Charging Receptacle - Woodhead 59W47 20 Amp	1			x
Battery Charge Indicator - Delete	1		x	
Light Bar - Whelen FT8RRRRP MiNi Freedom L.E.D. - Cab Corners	2			x
Lower Zone A Warning Lights - Whelen 600 Series L.E.D. Supplied Chassis Mfg	1		x	
Lower Zone B&D Intersection Lights - Whelen 600 Series L.E.D Front Bumper Tail	2		x	
Lower Zone B&D Intersection Light Chrome Flange - Whelen 6E flange	2		x	
Lower Zone B&D Midship Warning Lights - Whelen 600 Series On Cab Above Wheel Well	2			x
Lower Zone B&D Midship Warning Light Chrome Flange - Whelen 6Eflange	2			x
Lower Zone B&D Midship Warning Lights - Whelen 600 Series Rear Wheel Well	2		x	
Lower Zone B&D Midship Warning Light Chrome Flange - Whelen 6Eflange	2		x	
Lower Zone B,D&C Rear Warning Lights - Power Arc P180 Series Rear Of Body	2			x
Upper Zone C Warning Lights - L31HAFN Drivers Side & L31HRFN LED Beacon	2		x	
Alternating Headlight Flasher	1			x
Electronic Siren - Whelen 295SLSA1	1		x	
Siren Speaker - Cast Product SA2401 Recessed In Bumper	2			x
Hose Bed Lights - Vista Strip Lights (Either side of Hose Bed Divider & One On Side)	3			x
Hand Held Spot Light - Collins Pulsar	1			x
Map Light - Federal LF18TR	1			x
Rear View Camera System - Rear & Two (2) Side Cameras W 7 Inch Color Monitor	1			x
12 Volt Receptacle - 3 Port 12 Volt Receptacle Officer Side Cab	1			x
SCENE LIGHTS - 12 VOLT				

SUMMIT
Fire Apparatus and Custom Fabricators

DESCRIPTION	QTY	PRICE	STD.	INCLUDED OPTIONS
ANDERSON STAINLESS STEEL PUMPER		$507,200.00		
12 Volt Scenes - Whelen 900 Opti Scene L.E.D (Rear, One On each Side Of Hosebed)	2			x
12 Volt Scenes - Whelen 900 Opti Scene L.E.D (Pump House One On each Side)	2			x
Brow Light - FRC FCA850-S50	1			x
120/240 VOLT REQUIRMENTS				
120/240 Wiring Standards - NEMA & NFPA 1901	1			x
Wiring - Fine Stranded Copper Type DLOC	1			x
Conduit Type - Liquid Tight Non Metallic	1			x
Dielectric Voltage Withstand Test	1			x
Certification Test OF Power Source	1			x
Generator - Smart Power HR-10 10KW Hydraulic	1			x
PTO - Chelsea Hot Shift PTO	1			x
Generator Performance Display - Smart Power Mounted In R2 Compartm	1			x
Load Center/Breaker Box - Square D 20 Space R2 Compartment	16			x
Circuit Breakers - (16) QO series	1			x
Remote Generator Activation - Front Bumper	4			x
Exterior Receptacles - Covered Duplex 5-20 (2 x Pump House, 2 x Rear Wheel Well)	4			x
Interior 120 Volt Receptacles - Cab, Duplex 5-15 (One Each Side Of Cab)	4			x
Side Mount Push Up Lights, Pump House - FRC FCA1540-S75 Push Up LIghts	2			x
Recessed Scene Lighting, Cab - FRC FCA200-S75 (One On Each Side)	2			x
Scene Lighting, Body - FRC FCA570-S75 Top Mount Fixed Light Heads (Cat Walk Mount)	2			x
Remote Scene Light Activation - (All) Cab Officers Side	1			x
Remote Push Up Light Activation - Pump Panel	1			x
Hannay Electric Cord Reel, ECR Series - R2 Pump Compartment	1			x
Electric Cord - 200' Yellow	1			x
Electric Cord Ball Stop	1			x
Electric Junction Box - Circle D With 4 L5-20 Receptacles	1			x
Juction Box Mounting Bracket - Aluminum R2	1			x
PAINTING AND STRIPING				
Undercoating	1			x
Wheels Painted Job Color	1			x
PPG Two Stage Urthane - Body Job Color	1		x	

11 Sperti Drive, Edgewood, KY 41017
(859)331-0360
FAX: (859)331-0399

Fire Apparatus and Custom Fabricators

DESCRIPTION	QTY	PRICE	STD.	INCLUDED OPTIONS
ANDERSON STAINLESS STEEL PUMPER		$507,200.00		
NFPA Perimeter - 6" White Reflective Cab	1		x	
NFPA Perimeter - 6" White Reflective Body	1		x	
NFPA Chevron 6' Red/Lime Green Reflective - Body, Rear Door, Hose Bed Door	1			x
NFPA Chevron 6' Red/Lime Green Reflective - Front Bumper Wrap	1			x
WARRANTIES				
Limited Warranty (1-Year)	1		x	
Paint Warranty (7-Year)	1		x	
Electrical Warranty (10-Year)	1		x	
Body Structural Warranty (20-Year)	1		x	
Cab Paint Warranty (10 - Year)	1		x	
Cab Structural Warranty (10 - Year/100,000 Miles)	1		x	
Engine Warranty (5 - Year/100,000 Miles)	1		x	
Transmission Warranty (5 - Year)	1		x	
SUMMIT ANDERSON STAINLESS STEEL PUMPER OPTIONS				
CHASSIS OPTIONS:				
20" MFD Cab In Lieu Of 10" Raised Roof MFD Cab		$1,752.00		
10" Raised Roof LFD Cab In Lieu Of 10" Raised Roof MFD Cab		$3,204.00		
20" Raised Roof LFD Cab In Lieu Of 10" Raised Roof MFD Cab		$4,924.00		
350 Hp Cummins ISL In Lieu Of The 330 Hp Cummins ISL		$7,180.00		
380 Hp Cummins ISL In Lieu Of The 330 Hp Cummins ISL		$6,913.00		
450 Hp Cummins ISL In Lieu Of The 400 Hp Cummins ISL		$722.00		
68 Galon Fuel Tank in Lieu Of the 50 Gallon (will reduce rear compartment size)		$166.00		
Weldon Multiplex V-Mux Chassis With Vista Display (Drivers Side)		$4,992.00		
Officer Side V-Mux Vista Display		$1,838.00		
Front Wheel 17" Disc Brakes		$409.00		
Michelin Rear M&S Grip Tires In Lieu Of Highway Read		$250.00		
Auto Tank Drains in Lieu Of Manual Drains		$121.00		
Heated Wet Tank Auto Ejector		$123.00		
Black Door Handles And No Scuff Plates		$700.00		
Electric Door Locks In Lieu of Manual		$1,102.00		
Power Windows In Lieu Of Manual Roll Up		$2,017.00		
BODY UPFIT OPTIONS:				

Fire Apparatus and Custom Fabricators

DESCRIPTION	QTY	PRICE	STD.	INCLUDED OPTIONS
ANDERSON STAINLESS STEEL PUMPER		$507,200.00		
Hinged Hose Bed Doors with Vinyl Hose Tarp At Rear In Lieu Of The ROM Roll Up Hose Bed Cover		-$4,500.00		
Reduction OF Compartment Heights to 64" In Lieu Of 72" (ROM Hose Bed Cover Requires Raised Hose Bed and Compartments)		-$1,500.00		

11 Sperti Drive, Edgewood, KY 41017
(859)331-0360
FAX: (859)331-0399

SUMMIT

Fire Apparatus and Custom Fabricators

CUSTOM DESIGN IS OUR SPECIALTY, QUALITY IS OUR COMMITMENT!

11 Sperti Drive Edgewood, KY 41017 (859) 331-0360 www.SummitFireApparatus.com

Fire Apparatus and Custom Fabricators

DESCRIPTION	QTY	PRICE	STD. OPT	INCLUDED OPT.
SHARONVILLE RESCUE PUMPER		$486,300.00		
CHASSIS				
Metro Star	1			
Summit Fire (SUM1001)				
Model Year - 2014				
Country of Service United States Of America				
Apparatus Type Pumper				
Vehicle Type Straight Truck				
Axle Configuration 4x2 (Rear Axle Drive Only)				
GAWR Front 21500#				
GAWR Rear 31000#				
Pump Provision Driveline Midship				
Cab Style MFD 10" Raised Roof				
Cab Frt Fascia Classic				
Cab Frt Grille Classic Styled				
Cab Undercoat				
Cab Side Drip Rail				
Cab Paint Exterior Single Color				
Cab Paint Manufacturer PPG				
Cab Paint Primary/Lower Color PPG White FBCH 2185				
Cab Paint Warranty 2014 (10) Year/100,000 Miles				
Cab Paint Int Zolatone Silver Gray				
Cab Entry Doors (4)				
Cab Entry Door Type Full Length				
Cab Structural Warranty 2014 (10) Year/100,000 Miles				
Cab Test Information Crash Test ECE-R29/SAE J2420/SAE J2422				
Elec System 12V DC				
Data Recording Sys Vehicle Data				
Pwr & Gnd Stud 40A Batt Dir & 15A Ign Sw				
Aux Pwr & Gnd Stud Bhd Sw Pnl 40A Batt Dir				
Addl Pwr & Gnd Stud Bhd Drv Seat 40A Batt Dir				
Exterior Electrical Terminal Coating Spray On Plasti Dip				
Engine Diesel 450HP Cummins ISL9				
Cab Engine Tunnel Small/Medium				
DPF Ctrl Regeneration Sw & Inhibit Sw				
Engine Programming High Idle Speed 1250 RPM				
Engine High Idle Ctrl Manual				
Engine Programming Road Speed Governor Enabled				
Aux Engine Brake Compression Brake w/VG Turbo				
Aux Engine Brake Ctrl On/Off & Low/Med/High Sw Pnl				
Fluid Fills Under Cab w/Tnl Hatch Engine Oil Check				
Elec Engine Oil Level Indicator				
Engine Warranty Cummins (5) Year/100,000 Miles				
Rmt Throttle Harness PSG Class 1 Total Press Gov Side Mnt				
Engine Program Rmt Throttle Off				

SUMMIT
Fire Apparatus and Custom Fabricators

DESCRIPTION	QTY	PRICE	STD. OPT	INCLUDED OPT.
SHARONVILLE RESCUE PUMPER		$486,300.00		
Engine Programming Idle Speed 700 RPM				
Engine Fan Drive Clutch Engaged in Pump Mode				
Engine Cooling Sys Serial Flow Medium				
Engine Cooling System Protection Light Duty Skid Plate				
Engine Coolant Extended Life				
Elec Low Coolant Level Indicator				
Engine Pump Heat Exchanger				
Coolant Hoses Silicone				
Engine Air Intake Filtration and Restriction				
Eng Exhaust Sys Under Frm RH Outboard w/DPF/SCR Inline w/T-Brkt Hangers				
Diesel Exhaust Fluid Tank LH 6 Gal Fill Thru Rr Step				
Engine Exh Acc Exh Temp Mitigation				
Engine Exhaust Wrap				
Transmission GEN IV-E Allison 3000 EVS				
Transmission Mode Programming 4th Startup/5th Mode				
Transmission Feature Programming I/O Package 198/Pumper				
Elec Transmission Oil Level Indicator				
Transmission GEN IV-E Shift Sel Key Pad/Push Button				
2nd Gear Pre-Select				
Transmission Cooling System				
Transmission Warranty Allison (5) Year				
Driveline Spicer 1710 HD				
Midship Pump Jackshaft Only				
Midship Pump/Gearbox Model Hale QMAX				
Midship Pump Ratio 2.28:1 (23)				
Midship Pump Gearbox Drop Hale "L"				
Midship Pump Location C/L Suction 121"				
Fuel Filter/Wtr Separator Fleetguard FS1003 w/Lt & Alarm				
Fuel Lines Nylon				
Fuel Tank 50 Gallon				
Fuel Tank Fill Port RH Fwd/LH Mid				
Frt Axle Meritor MFS 21500# Beam				
Front Axle Warranty Meritor 2014				
Frt Wheel Bearing Lube Oil				
Frt Shock Absorbers Bilstein				
Frt Suspension 9 Leaf 20000-21500#				
Steering Column/Wheel Tilt/Telescopic 18" 4 Spoke				
Power Steering Pump TRW				
Elec Power Steering Fluid Level Indicator				
Front Axle Cramp Angle 48L/44R Degrees				
Power Steering Gear TRW TAS 65 w/Assist				
Chassis Alignment				
Rear Axle 31500# Meritor RS-30-185				

Fire Apparatus and Custom Fabricators

DESCRIPTION	QTY	PRICE	STD. OPT	INCLUDED OPT.
SHARONVILLE RESCUE PUMPER		$486,300.00		
Rear Axle Differential Lubrication Oil				
Rear Axle Warranty Meritor 2014				
Rear Wheel Bearing Lubrication Oil				
Vehicle Top Speed 65 MPH				
Rear Susp Reyco 79KB Spring 21000-31500# Conventional				
Frt Tire 425/65R 22.5 Michelin XFE				
Rear Tire 315/80R 22.5 Michelin XDY3				
Rear Axle Ratio 5.38				
Tire Pressure Equalization System Crossfire Voucher				
Tire Pressure Ind Frt Only Pop Up Voucher				
Frt Wheel Alcoa 22.5 x 12.25 Alum				
Rr Whl Alcoa 22.5 x 9.00 Alum				
Aux Lubrication System SKF RH Rail				
Brake System ABS/ATC/ESC Sgl Axle				
Frt Brakes Meritor EX225 Disc 17"				
Rr Brakes S-Cam Drum 16.5" x 7" Cast Iron Shoe				
Prk Brake Rr Wheels Only				
Prk Brake Ctrl Ctr Tunnel Mnt				
Rr Brake Slack Adjusters Haldex				
Air Dryer Wabco System Saver 1200 Bhd RH Step				
Frt Brake Chambers MGM Type 24 Long Stroke				
Rr Brake Chambers TSE 30/36 Long Stroke				
Air Compressor Wabco SS318 18.7 CFM				
Air Governor Mnt on Air Cleaner Bracket				
Aux Air Reservoir 1200 Cu In				
Moisture Ejectors Auto w/Cable				
Air Sply Lines Nylon				
Air Inlet Connection w/Auto Eject				
Air Inlet/Auto Eject Conn Cover Yellow				
Air Inlet Location LH Cab Side Mid Fwd				
Plumbing Air Inlet Conn				
Air Inlet/Outlet Manual Conn Tru-Flate Interchange 1/4"				
Rear Air Tank Mnt Any Bhd Rear Axle Perpendicular w/Frame				
Wheelbase 219.0"				
Rear Overhang 60.0"				
Frame Double Channel 35.00" Width				
Frame Warranty Lifetime 2014				
Frame Clear Area Inside/Outside Rail 30" Rwd Back of Cab				
Frame Paint Powder Coat Black				
Frt Bumper Stainless Steel Flat				
Frt Bumper Extension Length 28"				
Frt Bumper Extension Frame Width 48.25"				
Air Horn (2) Plumbing Only No Horns				
Air Horn Reservoir (1) 1200 Cu In				

11 Sperti Drive, Edgewood, KY 41017
(859)331-0360
FAX: (859)331-0399

SUMMIT
Fire Apparatus and Custom Fabricators

DESCRIPTION	QTY	PRICE	STD. OPT	INCLUDED OPT.
SHARONVILLE RESCUE PUMPER		$486,300.00		
Frt Bumper Tow Eyes 2" Chrome Below				
Cab Tilt System				
Cab Tilt Ctrl Receptacle Temp				
Cab Windshield				
Glass Frt Dr Pwr				
Glass Tint Frt Dr Automotive Green				
Glass Rr Dr RH Pwr				
Glass Tint Rr Door RH Automotive Green				
Glass Rr Dr LH Pwr				
Glass Tint Rr Door LH Automotive Green				
Glass Side Mid RH Fxd 16"W x 26"H				
Glass Tint Side Mid RH Automotive Green				
Glass Side Mid LH Fxd 16"W x 26"H				
Glass Tint Side Mid LH Automotive Green				
Climate Ctrl Htr Defroster A/C Ovrhd Painted Alum				
Climate Control Drain Gravity				
Climate Ctrl Actv Rotary Dash Mnt LH				
HVAC Overhead Cover Paint Zolatone Silver Gray				
A/C Condenser Location Roof Mnt Fwd Ctr				
A/C Compressor Large Capacity				
Cab Insulation				
Under Cab Insulation Engine Tunnel				
Interior Trim Floor				
Interior Trim Vinyl				
Rear Wall Interior Trim Vinyl				
Header Trim XDuty				
Interior Trim Sunvisor Vinyl				
Trim Center Dash ABS				
Trim LH Dash ABS				
Trim RH Dash ABS Glove Cmpt/MDT Prov				
Trim RH Dash Acc ABS Dash Slide-Out Tray				
Eng Tnl Trim Flr Mat w/Access Hatch				
Step Trim Grip Strut Lwr Flex-Tred Mid				
Under Cab Access Door Rear Step LH Painted				
Interior Door Trim Painted				
Door Trim Customer Nameplate				
Cab Dr Trim Reflective 1" Vert/6" Chevron w/Logo				
Interior Grab Handle 'A' Pillar 11" Molded				
Interior Grab Handle Frt Door Horiz 9"				
Int Grab Handle Rr Dr Alum Window Span 30" Black Powder Coat				
Interior Trim Vinyl Color Gray				
Interior ABS Trim Color Gray				
Interior Floor Mat Color Gray				

11 Sperti Drive, Edgewood, KY 41017
(859)331-0360
FAX: (859)331-0399

SUMMIT
Fire Apparatus and Custom Fabricators

DESCRIPTION	QTY	PRICE	STD. OPT	INCLUDED OPT.
SHARONVILLE RESCUE PUMPER		$486,300.00		
Cab Paint Int Dr Trim Zolatone Silver Gray				
Header Trim Interior Paint Zolatone Silver Gray				
RH Dash Acc Interior Paint Powdercoat Black				
Dash Pnl Group 3-Pnl				
Switches Ctr Pnl 6 Upr LH				
Switches Left Pnl 13 (6+7)				
Switches Right Pnl 0				
Seat Belt Warn Indv Seat Loc & LED Display w/VDR				
Seat Material Ballistic				
Seat Color Gray/Red Seat Belts				
Seat Back Logo Spartan				
Seat Driver Bostrom Firefighter 4-Way Air Non-ABTS				
Seat Back Driver Non-SCBA Non-ABTS				
Seat Mounting Driver				
Seat Officer Bostrom Firefighter Fixed ABTS				
Seat Back Officer SCBA Bostrom SecureAll w/Quick-Adjust				
Seat Mounting Officer				
Seat RFO Location (2) R/L				
Seat Crew RFO Bostrom Firefighter Fixed				
Seat Back RFO SCBA Bostrom SecureAll w/Quick-Adjust				
Seat Mounting RFO Rwd 2"				
Seat Belt Orientation Crew Outboard Shoulder To Inboard Hip				
Seat FFC Location (2) Ctr				
Seat Crew FFC Bostrom Firefighter Flip-Up				
Seat Back FFC SCBA Bostrom SecureAll w/Quick-Adjust				
Seat Mounting Forward Facing Center				
Seat Frm Fwd Fcg Dual				
Seat Frm Fwd Fcg Strg Acc Dr (2) R/L Sd				
Cab Frt Undrst Strg Acc Dr				
Seat Compartment Door Finish Zolatone Silver Gray				
Windshield Wiper System Single Motor				
Electronic Windshield Fluid Level Indicator				
Cab Door Hardware Chrome w/Scuff Plate				
Door Locks Manual				
Grab Handles SS 24"				
Mirror LH CRM-310-1750-THCHR, RH CRM-310-1752-A10-THCHR				
Rearview Mirror Heat Sw Pnl				
Cab Fender SS				
Cab Ext Frt & Side Emblems				
Cab Exterior Model Nameplate Metro Star				
Ign Mstr Sw w/Keyless Start				
Batt (6) Group 31 Harris				
Batt Tray (2) R/L Steel				

Fire Apparatus and Custom Fabricators

DESCRIPTION	QTY	PRICE	STD. OPT	INCLUDED OPT.
SHARONVILLE RESCUE PUMPER		$486,300.00		
Batt Box Cover (2) Steel w/Black Handles				
Batt Cables				
Batt Jumper Stud Frt LH Lwr Step				
Alternator Leece-Neville 320A				
Headlights 4 Headlamps Halogen				
Frt Turn Signals Whelen 600 Series Halogen				
Headlights Below Frt Warn Lts				
Side Turn/Marker Lts LED				
Marker & ICC Lts Face Mnt LED				
Hdlt & Mrkr Lt Actv Rkr Sw/DRL				
Cornering Lts Whelen 500 Series 5mm LED on Bmpr Tail				
Ground Lts Resp Dr & Rkr Sw				
Step Lts				
Engine Compartment Work Lt (1)				
Interior Overhead Lights Weldon				
Light Tower Prov Reinforcement Pad				
Light Tower Model Will-Burt Nightscan 4.5 (NS-15) Optimum 240V 1500W QH (6)				
Lt Tower Orientation Parallel to Rear Wall				
Lt Tower Horizontal Justification Centered Left To Right				
Lt Tower Lt Head Orientation RH				
Lt Tower Fore/Aft Orientation Rear				
Do Not Move App Lt Flashing Red w/Alarm				
Mstr Warn Sw Pnl				
Inboard Frt Warn Lts Provision				
Horn Btn Sel Sw Elec Horn/Air Horn				
Air Horn Actv Strg Whl/RH Ft Sw				
Back-Up Alarm Ecco 575				
Instrumentation Standard				
Backlighting Color Red				
Aux Speedometer Analog				
Cam Rr & RH Teardrop w/Mon				
Panel Layout				
Cab Exterior Protection Front				
Fire Extinguisher Ship Loose				
Door Keys for Manual Locks (4)				
Warranty Cab and Chassis 2014 (1) Year				
Operation Manual Digital Copy (2)				
Engine & Transmission Operation Manual Hard Copy (2)				
Engine Service Manual Hard Copy Cummins ISC/ISL (2)				
As Built Wiring Diagrams Digital Copy				
End of Frame Cross Member				
CHASSIS MODIFICATIONS				

Fire Apparatus and Custom Fabricators

DESCRIPTION	QTY	PRICE	STD. OPT	INCLUDED OPT.
SHARONVILLE RESCUE PUMPER		$486,300.00		
Rear Drop Frame Under Body and Tailboard - Steel	1		x	
Front Bumper Extenion - 28"	1			x
Front Bumper Extension Storage - Aluminum (2 x Hyd Reels, 1 x 1.5" Trash line)	1			x
Front Bumper Extension Gravel Shield - Aluminum Treadplate	1			x
Hydraulic Reels Front Bumper Mount - Hannay EF Series Electric Reels	2			x
Hydraulic Reel Fairleads - 4 Way	2			x
Hydraulic Reels Rewind Switch - Momentary Adjacent to Each Reel	2			x
Rescue TooL Mounting- Front Bumper (2 Toold)	2			x
Tire Chains - Rudd Rotogrip III	1			x
Air Connnection Point - Front Bumper	1			x
Air Connnection Point - Rear Of Body	1			x
Rear Tow Eyes - Painted Under Rear Tailboard	2		x	
Tire Pressure Monitoring System - Valve Stem Low Pressure Indicators	1		x	
Wheels - Unfinished	1		x	
Engine Cowl Storage Tray - Rubberized Aluminum Tray Over Engine Cover	1			x
Arm Rest Drivers Side - Mounted on Engine Cowl Tray	1			x
Cup Holders - Two (2) Cupholder To Be Installed On each Side Of Engine Cowl Tray.	2			x
EMS Compartment (Roll Up Door) Two (2) - Mounted In Forward Facing Outboard Seating Postions w/ LED Lighting & an Electrical Outlet	2			x
Overhead Storage Compartment W/Sliding Access Doors - Mounted Above Forward Facing Rear Seats	1			x
Book & Map Storage - 1 Aluminum Rack w/ Velcro Fasteners	1		x	
Radio Tree Stacked Radio Mount - Swivel Mounted to Tray	1			x
Front Mud Flaps	1		x	
Rear Mud Flaps	1		x	
Fluid Identifcation Plate	1		x	
Fuel Type Label - Diesel	1		x	
Seating Label - Maximum Seating Of 2	1		x	
Vehicle Height Label	1		x	
Seatbelt Warning Label	1		x	
Riding On Step Warning Label - Rear of Body	1		x	
Helmet In Cab Warning Label	1		x	
NFPA Helmet Storage - Department To Mount In Body	1		x	
BODY - RESCUE PUMPER				
Body Construction - Combination Formed Sheet / Extruded	1		x	

SUMMIT
Fire Apparatus and Custom Fabricators

DESCRIPTION	QTY	PRICE	STD. OPT	INCLUDED OPT.
SHARONVILLE RESCUE PUMPER		$486,300.00		
Body Subframe - Aluminum Extruded	1		x	
Material - .160" and .190" 5052 Aluminum	1		x	
Body Mounting	1		x	
Polymer Isolation Strips - Chassis Frame	1		x	
Construction - All Aluminum	1		x	
Body Dimensions - 16' (192") Long, 105" High, 96" Wide	1		x	
Compartment Interiors - Unfinished Aluminum	1		x	
Compartment Floors - Raised Sweep-out Type	1		x	
Rear Tail Board - 10 inch NFPA Aluminum Treadplate	1			x
Fenderettes - Polised Stainless Steel	2		x	
Wheel Well Liners - Full Removable Poly Liners	2		x	
Corrosion Protection Pkg - Anti Corrosion Compound and Nylon Spacers on All Fasteners	1		x	
Fuel Fill Pocket - Cast Aluminum Houseing w/ Door	1			x
Roof Top Compartments - Coffin Style Integral Formed Aluminum	1			x
Roof Top Compartments Interior False Wall To Protect Outsid Headrail	1			x
Roof Top Hose Bed - Aluminum Extruded Floor	1			x
Rear Access Ladder & Pike Pole Storage Compartment - Below Hosebed	1			x
Rood Top Landing And Step - ALuminum Treadplate / NFPA Tread Plate				
COMPARTMENTATION - 6-Bay				
L1 Compartment Dimensions - 60" Wide x 75" High x 25.95" Deep	1		x	
L1 Adjustable Shelf Hard ware - P100 Aluminum Unistrut	4			x
L2 Compartment Dimensions - 60" Wide x 36" High x 25.95" Deep	1		x	
L2 Adjustable Shelf Hard ware - P100 Aluminum Unistrut	4			x
L3 Compartment Dimensions - 60" Wide x 75" High x 25.95" Deep (Lower Rear, Transverse)	1		x	
L3 Adjustable Shelf Hard ware - P100 Aluminum Unistrut	4			x
R1 Compartment Dimensions - 60" Wide x 75" High x 25.95" Deep	1		x	
R1 Adjustable Shelf Hard ware - P100 Aluminum Unistrut	4			x
R2 Compartment Dimensions - 60" Wide x 36" High x 25.95" Deep	1		x	
R2 Adjustable Shelf Hard ware - P100 Aluminum Unistrut	4			x
R3 Compartment Dimensions - 60" Wide x 75" High x 25.95" Deep (Lower Rear, Transverse)	1		x	
R3 Adjustable Shelf Hard ware - P100 Aluminum Unistrut	4			x

11 Sperti Drive, Edgewood, KY 41017
(859)331-0360
FAX: (859)331-0399

SUMMIT
Fire Apparatus and Custom Fabricators

DESCRIPTION	QTY	PRICE	STD. OPT	INCLUDED OPT.
SHARONVILLE RESCUE PUMPER		$486,300.00		
Rear Compartment Dimensions - 44" Wide x 42" High x 36" Deep	1			
Rear Adjustable Shelf Hard ware - P100 Aluminum Unistrut	4			
Doors - Annodized ROM Roll Up Doors	1			x
Roof Top Compartments - Coffin Style	4			x
Roof Top Compartments Access Doors - Treadplate Aluminum, Hinged Shoe Box Style	4			x
Roof Top Storage - Open	1			x
BODY UPFIT:				
Roof Access Ladder - Zico Quic-Ladder	1			x
Roof Access Ladder Deployment Warning - Activate Compartment Ajar Light When Deployed	1			x
Adjustable Aluminum Shelves	3			x
Adjustable Aluminum Slideout Trays	5			x
Slideout Tool Board	3			x
Heavy Duty Slideout Tool Board	1			
Aluminum Vertical Compartment Dividers	6			x
Electric Rewind Electrical Cord Reel w/ Junction Box	2			x
Articulating Slide Tray	5			x
Fixed Aluminum Shelf	1			x
Heavy Duty Slide Tray	2			x
Airbag Storage Dividers	1			x
Cribbing Storage Compartment	1			x
Cribbing Storage Compartment Aluminum Access Doors	2			x
SCBA/Fire Extinguisher Storage - 1 Cylinder Drivers Wheel Wheel, Aft Wheel	1			
SCBA/Fire Extinguisher Storage - 2 Cylinder	3			x
Grab Rail - Apparatus Rear	1			x
Plastic Compartment Floor Tiling - All Shelving and Slide Trays	1			x
Floor Dry Hopper - Air Actuated in Roof Top Storage Area	1			x
Stainless Steel Guards - Lower Lip of Body Compartments	9			x
Cribbing Storage Provisions - Body Compartment	1			x
Cribbing Storage Access Door - Hinged Aluminum	1			x
Hose Bed Dividers 4	4			x
Hose Bed Cover - Hinged Aluminum	1			x
Hose Bed Restraint - Vinyl. Buckled	1			x
Rear Ladder & Pike Pole Storage	1			x
PUMP	1		x	
Pump - Hale 2000 GPM	1		x	
Gearbox - In Cab Pneumatic Shift	1		x	
Pump Shift Overide - Driverside Pump Panel	1			x
Pump Seals - Mechanical	1		x	

11 Sperti Drive, Edgewood, KY 41017
(859)331-0360
FAX: (859)331-0399

SUMMIT
Fire Apparatus and Custom Fabricators

DESCRIPTION	QTY	PRICE	STD. OPT	INCLUDED OPT.
SHARONVILLE RESCUE PUMPER		$486,300.00		
Priming Pump - Oiless	1			x
Auxillary Cooler / Heat Exchanger - Pump/Engine Circulator	1		x	
Intake Relief Valve - Pressure Relief Valve	6		x	
Master Drain - Drivers Side Lower Pump Panel	1		x	
Drains - Quarter Turn Valves Drivers Side Pump Panel	1		x	
Thermal Releif Valve - Delete	1			x
Cooling Line - Delete	1			x
Plumbing - Stainless Steel & High Pressure Hose	1		x	
Valves - Akron 8000 Series Quarter Turn	1		x	
Pump Anode - Two	1			x
Pump Test - Manufacturer Class A NFPA 1901	1		x	
Suction Releif - Terminate Below Pump House Away From Work Area	1			x
Steamer Inlets - 6"	1		x	
6" Gated Inlets - Hale MIVE	2			x
MIV Contol Electric	2			x
MIV Contol Location - Operators Panel	1			x
Steamer Caps - 6" Long Handle Chrome	1		x	
Left Side Auxillary Intake - (1) 2.5" Aux Intake	1		x	
Left Side Auxillary Intake Control - Lever	1			x
Left Side Auxillary Intake Termination - Chrome Plug and Chain	1		x	
Right Side Auxillary Intake - (1) 2.5" Aux Intake	1		x	
Right Side Auxillary Intake Control - Electric	1		x	
Right Side Auxillary Intake Termination -Chrome Cap with Chain	1		x	
Pump Module - Full Width (96) Self-Supported Structure Independent of Body W/ Roll Up Doors	1			x
Pump Module To Body Flex Joint	1		x	
Pump Module - Traditional Side Mount	1			x
Pump Module Construction - Aluminum Extruded	1		x	
Pump Control Panel - Side Mount Control	1		x	
Dunnage Storage Area - Raised Equal With Body	1			x
Dunnage Storage Access - Painted Large Side Access Doors	4			x
Hose Well In Running Board - Drivers Side	1			x
Grab Handles - Two (2) Mounted to Module, One On Each Side	2		x	
Pump Panel Construction - Rubberized Aluminum	1			x
Valve Controls - Elkhart RC-10 With 5" HandWheel	8			x
Pressure Gauges - 2.5" Class One Line Gauges	2		x	
Master Gauges - Delete	1		x	
Pressure Governor - Class 1 TPG Plus	1			x
Fuel Guage - Additional Guage On Pump Panel	1			x

11 Sperti Drive, Edgewood, KY 41017
(859)331-0360
FAX: (859)331-0399

SUMMIT
Fire Apparatus and Custom Fabricators

DESCRIPTION	QTY	PRICE	STD. OPT	INCLUDED OPT.
SHARONVILLE RESCUE PUMPER		$486,300.00		
Water Level Gauge - Class One 1 ITL	1		x	
U.L. Test Ports	1		x	
Data Plate - Driver Side Pump Panel	1		x	
Labels - All Intakes, Discharges, Drains & Gauges NFPA Labeled & Color Coded	1		x	
Tank To Pump Valve - 3" 1/4 Turn Ball Valve	1		x	
Tank Fill Valve - 1.5" 1/4 Turn Ball Valve	2		x	
Left Side Discharges - Two (2) 2.5"	2		x	
Left Side Discharge Control - Class One Locking Push & Pull	2		x	
Left Side Discharge Termination - 2.5" Chrome Cap With Chain	2		x	
Right Side Forward Discharge -Two (2) 3"	2		x	
Right Side Forward Discharge Control - Class One Locking Push & Pull	2		x	
Right Side Forward Discharge Termination - 2.5" Chrome Cap With Chain	2		x	
Right Side Rearward Discharge - One (1) 2.5"	1			x
Right Side Rearward Discharge Control - Class One Locking Push & Pull	1			x
Right Side Rearward Discharge Termination - Chrome Cap and Chain	1			x
Rear Left Discharges - One (1) 1/4 Turn Ball Valve	1			x
Rear Leftside Discharge Control - Class One Locking Push & Pull	1			x
Rear LeftSide Discharge Termination - 2.5" Chrome Cap With Chain	1			x
Rear Right Right Discharges - 2.5"	1		x	
Rear Right Side Discharge Control - Class One Locking Push & Pull	1		x	
Rear Right Side Discharge Termination - Pre-Connect Hose Bed	1		x	
Deluge Discharge - 3" Plumbed To Top Of Pump House	1			x
Deluge Contol - Class One Locking Push & Pull	1			x
Deluge Discharge - 3" w/ 18" Telescoping Extension	1			x
Deluge Monitor - Akron Deck Master 3440 Remote Control w/ Nozzle 5077 nozzle	1			x
Crosslays- (2) 1.75" - Ahead of Pump Module W/ Removable Tray	2		x	
Crosslay Controls - Class One Locking Push & Pull	2		x	
Crosslay- 2.5" - Ahead Pump Module W/ Removable Tray	1			x
Crosslay 2.5" Controls - Class One Locking Push & Pull	1			x
Roller Guides Around Crosslay Hosebeds				
Front Bumper Trashline/Jumpline - (1) 1.5" Discharge	1			x
Front Bumper Trashline Discharge Control - Class One Locking Push Pole.	1			x

SUMMIT
Fire Apparatus and Custom Fabricators

DESCRIPTION	QTY	PRICE	STD. OPT	INCLUDED OPT.
SHARONVILLE RESCUE PUMPER		$486,300.00		
Front Bumper Discharge Termination - Delete	1			x
Pump Compartment Light - (1) Vista Strip LED Across Top (In Adddition To Door Lights)	1		x	
Foam System - Foam Logix 3.3 Dual Foam	1		x	
Foam Discharges - two (2) 2.5" rear discharges, (1) 2.5" Crosslay, (2) 1 ¾" Crosslays and the (1) 1 ¾" hose well located in front bumper.	6			x
Foam Control - Push / Pull Operators Panel	1			x
Foam Flush Control - Driver Side Pump Panell	1			x
Foam Strainer Clean Out - Drivers Side Pump Panel	1			x
Foam Selector - Manual Dual Tank Selector On Pum Panel	1			x
Foam Check Valves - Integral Injector Fitting & Waterway Check Valves	1			x
Flow Meter(s) - Foam System	1			x
Low Tank Level Switch - Foam Tank	1			x
Foam Up Load System - Foam Pro	1			x
Pull Out Pump Operators Platform - Left & Right side Pump Panel	2			x
TANK	1		x	
Booster Tank - UPF Poly 500	1		x	
ISO Certification - 9001:2008	1		x	
Construction - Pt3 Polypropylene	1		x	
Closed Curve Baffling	1		x	
Fill Tower W/Cover - Center Mount	1		x	
Vent Overflow - 4 Inch	1		x	
Sump	1		x	
3" Npt Threaded Outlet Bottom Of Sump	1		x	
Foam Cell - Two (2) 30 Gallon	2			x
Foam Drain - Delete	1			x
12 VOLT ELECTRICAL REQUIRMENTS				
12 Volt Elctrical System - Multiplex System	1		x	
Wiring Requirments - NFPA 1901	1		x	
SAE Practices & FMVSS Compliant	1		x	
Wiring - GXL Stranded Copper	1		x	
12V Dc Voltage Output Testing & Documentation	1		x	
Switch Panel - Cab mounted - One Master Switch Warning System	1		x	
Reserve Capacity Test:	1		x	
Alternator Performance Test At Idle:	1		x	
Alternator Performance Test At Full Load:	1		x	
Low Voltage Alarm Test:	1		x	
Documentation - NFPA Test Results	1		x	

Fire Apparatus and Custom Fabricators

DESCRIPTION	QTY	PRICE	STD. OPT	INCLUDED OPT.
SHARONVILLE RESCUE PUMPER		$486,300.00		
Battery Disconnect Switch - Supplied Chassis Manufacturer	1		x	
Battery Light - Green L.E.D. Dash Mounted	1		x	
Clearance / Marker Lights - Tecniq P2 L.E.D	22		x	
License Plate Bracket and Light - Arrow	1		x	
Brake Lights, - Whelen 600 Series Red L.E.D.	2		x	
Turn Lights - Whelen 600 Series Amber L.E.D.	2		x	
Backup Lights - Whelen 600 Series Clear L.E.D.	2		x	
Light Cluster Housing - Chrome	2		x	
Light Bar - Whelen 72" Freedom L.E.D.	1		x	
Blocking Right Away	1		x	
Lower Zone A Warning Lights - Whelen 600 Series L.E.D. Supplied Chassis Mfg	2		x	
Lower Zone B&D Intersection Lights - Whelen 600 Series L.E.D Front Bumper Tail	2		x	
Lower Zone B&D Intersection Light Chrome Flange - Whelen 6E flange	2		x	
Lower Zone B&D Midship Warning Lights - Whelen 600 Series On Cab Above Wheel Well	2		x	
Lower Zone B&D Midship Warning Light Chrome Flange - Whelen 6Eflange	2		x	
Lower Zone B&D Midship Warning Lights - Whelen 600 Series Rear Wheel Well	2		x	
Lower Zone B&D Midship Warning Light Chrome Flange - Whelen 6Eflange	2		x	
Upper Zone Warning Lights - Whelen 900 LED Lights (4 Zone C Altternating)	10			x
Electric Siren - Whelen WS-295	1		x	
Speaker - (1) CPI SH2015 Flush Mount	2		x	
Air Horns - Dual 21" Grover Stuttertone Front Bumper Mounted	2			x
Side Lights - (1) Left Rear Wheel Well (1) Right Rear Wheel Well	2			x
Compartment Lighting - ROM LED (2) Light Strips Each Door	18			x
Compartment Open Light - Red	1		x	
Hose Bed Lights - Vista Strip Lights (Either side of Hose Bed)	2			x
Ground Lighting Cab - 8 TecNiq LED				
Ground Lighting Body - 8 TecNiq LED	1		x	
Roof Top Compartment Lighting - LED	4			x
Roof Top Walkway Lighting - (6) LED	6			x
Battery Conditioner - Kussmaul Auto-Charge Super Kit w/ Auto-Eject	1			x
Battery Charging Receptacle - Kussmaul Auto Eject	1			x
Battery Charge Indicator - Delete	1		x	
Rear Mounted Camera - Audiovox Installed on Rear of Body	1			x
Hannay Hydraulic Reels - Rear Compartment	2			x

SUMMIT
Fire Apparatus and Custom Fabricators

DESCRIPTION	QTY	PRICE	STD. OPT	INCLUDED OPT.
SHARONVILLE RESCUE PUMPER		$486,300.00		
Hannay Fairlead	2			x
SCENE LIGHTING - 12 VOLT				
Scene Lights - (6) Whelen 900 LED Series Scene Lights	6			x
Brow Lights - (2) FRC FCA100-V08	1			x
Hooded Work Light - (2) Rear Body Mounted	2			x
120/240 VOLT REQUIREMENTS				
120/240 Wiring Standards - NEMA & NFPA 1901	1			x
Wiring - Fine Stranded Copper Type DLOC	1			x
Conduit Type - Liquid Tight Non Metallic	1			x
Dielectric Voltage Withstand Test	1			x
Certification Test OF Power Source	1			x
Generator - Smart Power HR-20 20KW Hydraulic	1			x
PTO - Chelsea Hot Shift PTO	1			x
Generator Performance Display - Smart Power Mounted on Pump Panel	1			x
Load Center/Breaker Box - Square D 20 Space	1			x
Circuit Breakers - (16) QO series	16			x
Remote Generator Activation - Front Bumper	1			x
Exterior Receptacles - Covered Duplex 5-20	4			x
Interior 120 Volt Receptacles - Cab, Duplex 5-15	1			x
Interior 120 Volt Receptacles - Body Compartrment, Duplex 5-15	4			x
220 Volt Receptacle - Body Compartment	1			x
Electric Cord - 200' Yellow	2			x
Electric Cord Ball Stop	2			x
Electric Junction Box - Circle D With 4 L5-20 Receptacles	2			x
Fair Lead, Cord Reel - Hannay 4 Way	2			x
Juction Box Mounting Bracket - Aluminum R2	1			x
Rear Mount Tri-Pod Lights - FRC FCA100-M10 on FC-600 Tripods	2			x
Light Tower - Command Light CL602 Mounted On Cab	1			x
Light Tower Remote - Mounter Over Wheel Well Adjacent to Breaker Box	1			x
Light Tower Fairing - Alumiinum Cab Mounted, Painted to Match	1			x
Tower Up Indicator - Cab Mounted	1			x
PAINTING / STRIPING				
Undercoating	1			x
Wheels - Factory Aluminum Finish	1		x	
PPG Two Stage Urthane - Body Job Color	1		x	
NFPA Perimeter - 6" White Reflective Cab	1			x

11 Sperti Drive, Edgewood, KY 41017
(859)331-0360
FAX: (859)331-0399

SUMMIT
Fire Apparatus and Custom Fabricators

DESCRIPTION	QTY	PRICE	STD. OPT	INCLUDED OPT.
SHARONVILLE RESCUE PUMPER		$486,300.00		
NFPA Perimeter - 6" White Reflective Body	1			x
"Z" Formation In Stripe	2			x
NFPA Chevron 6' Red/Amber Reflective - Body, Rear Door, Hose Bed Door	1			x
MISC. EQUIPMENT				
Wheel Chocks - Zico SAC-44 w/ Mounting Brackets Installed	2			x
Wiring Schematics Supplied	1		x	
Service Manual & Parts List Supplied	1		x	
WARRANTIES				
Limited Warranty (1-Year)	1		x	
Paint Warranty (7-Year)	1		x	
Electrical Warranty (10-Year)	1		x	
Body Structural Warranty (20-Year)	1		x	
Cab Paint Warranty (10 - Year)	1		x	
Cab Structural Warranty (10 - Year/100,000 Miles)	1		x	
Engine Warranty (5 - Year/100,000 Miles)	1		x	
Transmission Warranty (5 - Year)	1		x	
SUMMIT RESCUE PUMPER OPTIONS				
CHASSIS OPTIONS: Metro				
330 Hp Cummins ISL In Lieu Of The 450 Hp Cummins ISL		-$9,100.00		
380 Hp Cummins ISL In Lieu Of The 450 Hp Cummins ISL		-$8,300.00		
400 Hp Cummins ISL In Lieu Of The 450 Hp Cummins ISL		-$722.00		
68 Galon Fuel Tank in Lieu Of the 50 Gallon (will reduce rear compartment size)		$166.00		
100 Gallon Fuel Tank in Lieu Of the 50 Gallon (will reduce rear compartment size And Or Extend Body Length)		$594.00		
Weldon Multiplex V-Mux Chassis With Vista Display (Drivers Side)		$4,992.00		
Officer Side V-Mux Vista Display		$1,838.00		
Front Wheel 17" Disc Brakes		$409.00		
Michelin Rear M&S Grip Tires In Lieu Of Highway Read		$250.00		
Aluminum Rims		$2,000.00		
Auto Tank Drains in Lieu Of Manual Drains		$121.00		
Heated Wet Tank Auto Ejector		$123.00		

11 Sperti Drive, Edgewood, KY 41017
(859)331-0360
FAX: (859)331-0399

SUMMIT
Fire Apparatus and Custom Fabricators

DESCRIPTION	QTY	PRICE	STD. OPT	INCLUDED OPT.
SHARONVILLE RESCUE PUMPER		$486,300.00		
Black Door Handles And No Scuff Plates		$700.00		
Electric Door Locks In Lieu of Manual		$1,102.00		
Power Windows In Lieu Of Manual Roll Up		$2,017.00		
Xtreme Duty Interior		$3,800.00		
CHASSIS OPTIONS: Gladiator				
Gladiator Cab In Lieu of Metro		$25,600.00		
500 HP Cummins ISX12 in lieu of ISL 450 HP Cummins		$33,500.00		
500 Hp Cummins ISX15 In Lieu Of The 450 Hp Cummins ISL		$37,400.00		
550 Hp Cummins ISX15 In Lieu Of The 450 Hp Cummins ISL		$40,100.00		
600 Hp Cummins ISX15 In Lieu Of The 450 Hp Cummins ISL		$44,600.00		
68 Galon Fuel Tank in Lieu Of the 50 Gallon (will reduce rear compartment size)		$166.00		
100 Gallon Fuel Tank in Lieu Of the 50 Gallon (will reduce rear compartment size And Or Extend Body Length)		$594.00		
Weldon Multiplex V-Mux Chassis With Vista Display (Drivers Side)		$4,992.00		
Officer Side V-Mux Vista Display		$1,838.00		
Front Wheel 17" Disc Brakes		$409.00		
Michelin Rear Highway Tires In Lieu Of Highway Read		-$250.00		
Aluminum Rims		$2,000.00		
Auto Tank Drains in Lieu Of Manual Drains		$121.00		
Heated Wet Tank Auto Ejector		$123.00		
Chrome Door Handles With Scuff Plates		$700.00		
Electric Door Locks In Lieu of Manual		$1,102.00		
Power Windows In Lieu Of Manual Roll Up		$2,017.00		
Xtreme Duty Interior		$3,800.00		
PUMPS & PLUMBING:				
Hale Q FLow 1250 GPM Pump in Lieu of Hale Q Max1500 GPM (2 x2.5" LS, 2 x 2.5" RS, and 4" Waterway)		($3,300.00)		
Hale Q FLow 1750 GPM Pump in Lieu of Hale Q Max1500 GPM (2 x2.5" LS, 2 x 2.5" RS, LDD On RS and 4" Waterway)		$3,600.00		
Hale Q FLow 2000 GPM Pump in Lieu of Hale Q Max1500 GPM (2 x2.5" LS, 2 x 2.5" RS, LDD RS and 4" Waterway)		$3,600.00		
Waterous CSY 1250 GPM in Lieu Of The Hale Q Max 1500 GPM (2 x2.5" LS, 2 x 2.5" RS, and 4" Waterway)		$1,820.00		
Waterous CSY 1500 GPM in Lieu Of The Hale 1500 GPM		$2,290.00		
1.5" Trash Line Run to Front Bumper (Must Select Bumper Extension)		$1,100.00		
5" Front Intake (Vertical Through Bumper Extension With Air Operated Valve)		$6,820.00		
LDH Discharge on Right Side Pump Panel		$1,900.00		
Right Side 2.5"Suction		$1,325.00		

SUMMIT
Fire Apparatus and Custom Fabricators

DESCRIPTION	QTY	PRICE	STD. OPT	INCLUDED OPT.
SHARONVILLE RESCUE PUMPER		$486,300.00		
2.5" Rear Discharge - One (1) Right Hand		$2,100.00		
Hose Well In Pump House Running Board - Includes Velcro Strap		$750.00		
Foam Pro 1600 Includes Foam Cell In Tank (X-Lays Only)		$6,320.00		
Foam Pro 2001 - Single Foam System, Includes Foam Cell In Tank (X-Lays & Trash)		$7,900.00		
Foam Pro 2001 - Dual Foam System, Includes Two Foam Cells In Tank (X-Lays & Trash)		$9,800.00		
Foam Pro 2024 - Single Foam System, Includes One Foam Cell In Tank (X-Lays,Trash, One 2-1/2")		$9,720.00		
Foam Pro 2024 - Dual Foam System, Includes Two 20 Gallon Foam Cells In Tank (X-Lays,Trash, One 2-1/2")		$11,160.00		
Foam Pro Uplift System - Single		$2,350.00		
Foam Pro Uplift System - Dual		$4,580.00		
Pull Out Pump Operators Step		$575.00		

11 Sperti Drive, Edgewood, KY 41017
(859)331-0360
FAX: (859)331-0399

SUMMIT

Fire Apparatus and Custom Fabricators

CUSTOM DESIGN IS OUR SPECIALTY, QUALITY IS OUR COMMITMENT

11 Sperti Drive Edgewood KY 41017 (859) 331-0360 www.SummitFireApparatus.com

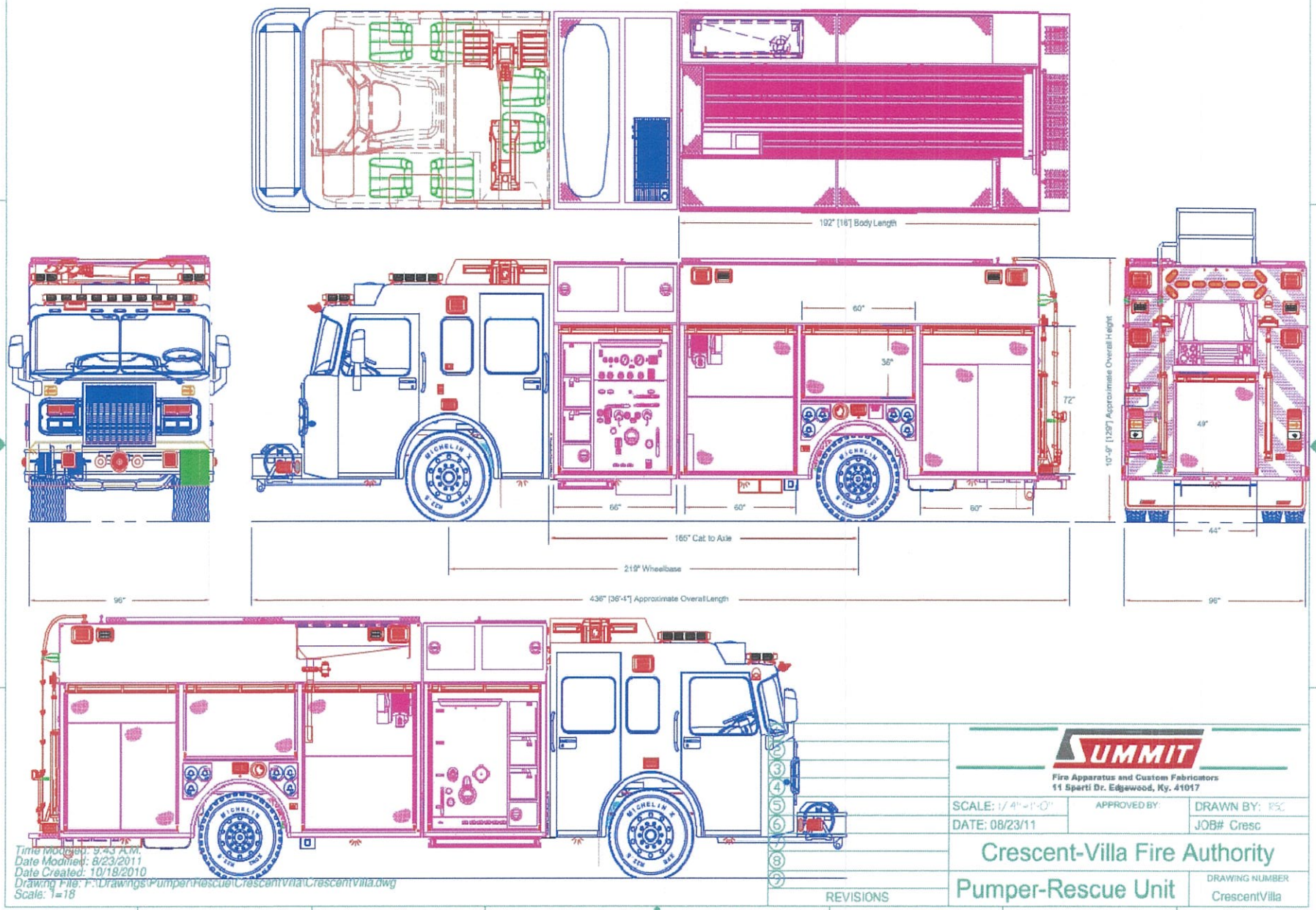
192" [16'] Body Length
60"
36"
72"
10'-9" [129"] Approximate Overall Height
49"
66"
60"
60"
165" Cab to Axle
219" Wheelbase
436" [36'-4"] Approximate Overall Length
96"
44"
96"
MICHELIN
Time Modified: 9:43 AM
Date Modified: 8/23/2011
Date Created: 10/18/2010
Drawing File: F:\Drawings\Pumper\Rescue\CrescentVilla\CrescentVilla.dwg
Scale: 1=18
REVISIONS
SUMMIT
Fire Apparatus and Custom Fabricators
11 Sparti Dr. Edgewood, Ky. 41017
SCALE: 1/4"=1'-0"
APPROVED BY:
DRAWN BY: RSC
DATE: 08/23/11
JOB# Cresc
Crescent-Villa Fire Authority
Pumper-Rescue Unit
DRAWING NUMBER
CrescentVilla

Fire Apparatus and Custom Fabricators

DESCRIPTION	QTY	PRICE	STD. OPT	INCLUDED OPT.
CRESENT SPRINGS RESCUE PUMPER		$529,100.00		
CHASSIS				
Metro Star	1			
Summit Fire (SUM1001)				
Model Year - 2014				
Country of Service United States Of America				
Apparatus Type Pumper				
Vehicle Type Straight Truck				
Axle Configuration 4x2 (Rear Axle Drive Only)				
GAWR Front 21500#				
GAWR Rear 31000#				
Pump Provision Driveline Midship				
Cab Style MFD 10" Raised Roof				
Cab Frt Fascia Classic				
Cab Frt Grille Classic Styled				
Cab Undercoat				
Cab Side Drip Rail				
Cab Paint Exterior Single Color				
Cab Paint Manufacturer PPG				
Cab Paint Primary/Lower Color PPG White FBCH 2185				
Cab Paint Warranty 2014 (10) Year/100,000 Miles				
Cab Paint Int Zolatone Silver Gray				
Cab Entry Doors (4)				
Cab Entry Door Type Full Length				
Cab Structural Warranty 2014 (10) Year/100,000 Miles				
Cab Test Information Crash Test ECE-R29/SAE J2420/SAE J2422				
Elec System 12V DC				
Data Recording Sys Vehicle Data				
Pwr & Gnd Stud 40A Batt Dir & 15A Ign Sw				
Aux Pwr & Gnd Stud Bhd Sw Pnl 40A Batt Dir				
Addl Pwr & Gnd Stud Bhd Drv Seat 40A Batt Dir				
Exterior Electrical Terminal Coating Spray On Plasti Dip				
Engine Diesel 450HP Cummins ISL9				
Cab Engine Tunnel Small/Medium				
DPF Ctrl Regeneration Sw & Inhibit Sw				
Engine Programming High Idle Speed 1250 RPM				
Engine High Idle Ctrl Manual				
Engine Programming Road Speed Governor Enabled				
Aux Engine Brake Compression Brake w/VG Turbo				
Aux Engine Brake Ctrl On/Off & Low/Med/High Sw Pnl				
Fluid Fills Under Cab w/Tnl Hatch Engine Oil Check				
Elec Engine Oil Level Indicator				
Engine Warranty Cummins (5) Year/100,000 Miles				
Rmt Throttle Harness PSG Class 1 Total Press Gov Side Mnt				
Engine Program Rmt Throttle Off				

SUMMIT
Fire Apparatus and Custom Fabricators

DESCRIPTION	QTY	PRICE	STD. OPT	INCLUDED OPT.
CRESENT SPRINGS RESCUE PUMPER		$529,100.00		
Engine Programming Idle Speed 700 RPM				
Engine Fan Drive Clutch Engaged in Pump Mode				
Engine Cooling Sys Serial Flow Medium				
Engine Cooling System Protection Light Duty Skid Plate				
Engine Coolant Extended Life				
Elec Low Coolant Level Indicator				
Engine Pump Heat Exchanger				
Coolant Hoses Silicone				
Engine Air Intake Filtration and Restriction				
Eng Exhaust Sys Under Frm RH Outboard w/DPF/SCR Inline w/T-Brkt Hangers				
Diesel Exhaust Fluid Tank LH 6 Gal Fill Thru Rr Step				
Engine Exh Acc Exh Temp Mitigation				
Engine Exhaust Wrap				
Transmission GEN IV-E Allison 3000 EVS				
Transmission Mode Programming 4th Startup/5th Mode				
Transmission Feature Programming I/O Package 198/Pumper				
Elec Transmission Oil Level Indicator				
Transmission GEN IV-E Shift Sel Key Pad/Push Button				
2nd Gear Pre-Select				
Transmission Cooling System				
Transmission Warranty Allison (5) Year				
Driveline Spicer 1710 HD				
Midship Pump Jackshaft Only				
Midship Pump/Gearbox Model Hale QMAX				
Midship Pump Ratio 2.28:1 (23)				
Midship Pump Gearbox Drop Hale "L"				
Midship Pump Location C/L Suction 121"				
Fuel Filter/Wtr Separator Fleetguard FS1003 w/Lt & Alarm				
Fuel Lines Nylon				
Fuel Tank 50 Gallon				
Fuel Tank Fill Port RH Fwd/LH Mid				
Frt Axle Meritor MFS 21500# Beam				
Front Axle Warranty Meritor 2014				
Frt Wheel Bearing Lube Oil				
Frt Shock Absorbers Bilstein				
Frt Suspension 9 Leaf 20000-21500#				
Steering Column/Wheel Tilt/Telescopic 18" 4 Spoke				
Power Steering Pump TRW				
Elec Power Steering Fluid Level Indicator				
Front Axle Cramp Angle 48L/44R Degrees				
Power Steering Gear TRW TAS 65 w/Assist				
Chassis Alignment				

SUMMIT
Fire Apparatus and Custom Fabricators

DESCRIPTION	QTY	PRICE	STD. OPT	INCLUDED OPT.
CRESENT SPRINGS RESCUE PUMPER		$529,100.00		
Rear Axle 31500# Meritor RS-30-185				
Rear Axle Differential Lubrication Oil				
Rear Axle Warranty Meritor 2014				
Rear Wheel Bearing Lubrication Oil				
Vehicle Top Speed 65 MPH				
Rear Susp Reyco 79KB Spring 21000-31500# Conventional				
Frt Tire 425/65R 22.5 Michelin XFE				
Rear Tire 315/80R 22.5 Michelin XDY3				
Rear Axle Ratio 5.38				
Tire Pressure Equalization System Crossfire Voucher				
Tire Pressure Ind Frt Only Pop Up Voucher				
Frt Wheel Alcoa 22.5 x 12.25 Alum				
Rr Whl Alcoa 22.5 x 9.00 Alum				
Aux Lubrication System SKF RH Rail				
Brake System ABS/ATC/ESC Sgl Axle				
Frt Brakes Meritor EX225 Disc 17"				
Rr Brakes S-Cam Drum 16.5" x 7" Cast Iron Shoe				
Prk Brake Rr Wheels Only				
Prk Brake Ctrl Ctr Tunnel Mnt				
Rr Brake Slack Adjusters Haldex				
Air Dryer Wabco System Saver 1200 Bhd RH Step				
Frt Brake Chambers MGM Type 24 Long Stroke				
Rr Brake Chambers TSE 30/36 Long Stroke				
Air Compressor Wabco SS318 18.7 CFM				
Air Governor Mnt on Air Cleaner Bracket				
Aux Air Reservoir 1200 Cu In				
Moisture Ejectors Auto w/Cable				
Air Sply Lines Nylon				
Air Inlet Connection w/Auto Eject				
Air Inlet/Auto Eject Conn Cover Yellow				
Air Inlet Location LH Cab Side Mid Fwd				
Plumbing Air Inlet Conn				
Air Inlet/Outlet Manual Conn Tru-Flate Interchange 1/4"				
Rear Air Tank Mnt Any Bhd Rear Axle Perpendicular w/Frame				
Wheelbase 219.0"				
Rear Overhang 60.0"				
Frame Double Channel 35.00" Width				
Frame Warranty Lifetime 2014				
Frame Clear Area Inside/Outside Rail 30" Rwd Back of Cab				
Frame Paint Powder Coat Black				
Frt Bumper Stainless Steel Flat				
Frt Bumper Extension Length 28"				
Frt Bumper Extension Frame Width 48.25"				
Air Horn (2) Plumbing Only No Horns				

SUMMIT
Fire Apparatus and Custom Fabricators

DESCRIPTION	QTY	PRICE	STD. OPT	INCLUDED OPT.
CRESENT SPRINGS RESCUE PUMPER		$529,100.00		
Air Horn Reservoir (1) 1200 Cu In				
Frt Bumper Tow Eyes 2" Chrome Below				
Cab Tilt System				
Cab Tilt Ctrl Receptacle Temp				
Cab Windshield				
Glass Frt Dr Pwr				
Glass Tint Frt Dr Automotive Green				
Glass Rr Dr RH Pwr				
Glass Tint Rr Door RH Automotive Green				
Glass Rr Dr LH Pwr				
Glass Tint Rr Door LH Automotive Green				
Glass Side Mid RH Fxd 16"W x 26"H				
Glass Tint Side Mid RH Automotive Green				
Glass Side Mid LH Fxd 16"W x 26"H				
Glass Tint Side Mid LH Automotive Green				
Climate Ctrl Htr Defroster A/C Ovrhd Painted Alum				
Climate Control Drain Gravity				
Climate Ctrl Actv Rotary Dash Mnt LH				
HVAC Overhead Cover Paint Zolatone Silver Gray				
A/C Condenser Location Roof Mnt Fwd Ctr				
A/C Compressor Large Capacity				
Cab Insulation				
Under Cab Insulation Engine Tunnel				
Interior Trim Floor				
Interior Trim Vinyl				
Rear Wall Interior Trim Vinyl				
Header Trim XDuty				
Interior Trim Sunvisor Vinyl				
Trim Center Dash ABS				
Trim LH Dash ABS				
Trim RH Dash ABS Glove Cmpt/MDT Prov				
Trim RH Dash Acc ABS Dash Slide-Out Tray				
Eng Tnl Trim Flr Mat w/Access Hatch				
Step Trim Grip Strut Lwr Flex-Tred Mid				
Under Cab Access Door Rear Step LH Painted				
Interior Door Trim Painted				
Door Trim Customer Nameplate				
Cab Dr Trim Reflective 1" Vert/6" Chevron w/Logo				
Interior Grab Handle 'A' Pillar 11" Molded				
Interior Grab Handle Frt Door Horiz 9"				
Int Grab Handle Rr Dr Alum Window Span 30" Black Powder Coat				
Interior Trim Vinyl Color Gray				
Interior ABS Trim Color Gray				

11 Sperti Drive, Edgewood, KY 41017
(859)331-0360
FAX: (859)331-0399

SUMMIT
Fire Apparatus and Custom Fabricators

DESCRIPTION	QTY	PRICE	STD. OPT	INCLUDED OPT.
CRESENT SPRINGS RESCUE PUMPER		$529,100.00		
Interior Floor Mat Color Gray				
Cab Paint Int Dr Trim Zolatone Silver Gray				
Header Trim Interior Paint Zolatone Silver Gray				
RH Dash Acc Interior Paint Powdercoat Black				
Dash Pnl Group 3-Pnl				
Switches Ctr Pnl 6 Upr LH				
Switches Left Pnl 13 (6+7)				
Switches Right Pnl 0				
Seat Belt Warn Indv Seat Loc & LED Display w/VDR				
Seat Material Ballistic				
Seat Color Gray/Red Seat Belts				
Seat Back Logo Spartan				
Seat Driver Bostrom Firefighter 4-Way Air Non-ABTS				
Seat Back Driver Non-SCBA Non-ABTS				
Seat Mounting Driver				
Seat Officer Bostrom Firefighter Fixed ABTS				
Seat Back Officer SCBA Bostrom SecureAll w/Quick-Adjust				
Seat Mounting Officer				
Seat RFO Location (2) R/L				
Seat Crew RFO Bostrom Firefighter Fixed				
Seat Back RFO SCBA Bostrom SecureAll w/Quick-Adjust				
Seat Mounting RFO Rwd 2"				
Seat Belt Orientation Crew Outboard Shoulder To Inboard Hip				
Seat FFC Location (2) Ctr				
Seat Crew FFC Bostrom Firefighter Flip-Up				
Seat Back FFC SCBA Bostrom SecureAll w/Quick-Adjust				
Seat Mounting Forward Facing Center				
Seat Frm Fwd Fcg Dual				
Seat Frm Fwd Fcg Strg Acc Dr (2) R/L Sd				
Cab Frt Undrst Strg Acc Dr				
Seat Compartment Door Finish Zolatone Silver Gray				
Windshield Wiper System Single Motor				
Electronic Windshield Fluid Level Indicator				
Cab Door Hardware Chrome w/Scuff Plate				
Door Locks Manual				
Grab Handles SS 24"				
Mirror LH CRM-310-1750-THCHR, RH CRM-310-1752-A10-THCHR				
Rearview Mirror Heat Sw Pnl				
Cab Fender SS				
Cab Ext Frt & Side Emblems				
Cab Exterior Model Nameplate Metro Star				
Ign Mstr Sw w/Keyless Start				
Batt (6) Group 31 Harris				

11 Sperti Drive, Edgewood, KY 41017
(859)331-0360
FAX: (859)331-0399

Fire Apparatus and Custom Fabricators

DESCRIPTION	QTY	PRICE	STD. OPT	INCLUDED OPT.
CRESENT SPRINGS RESCUE PUMPER		$529,100.00		
Batt Tray (2) R/L Steel				
Batt Box Cover (2) Steel w/Black Handles				
Batt Cables				
Batt Jumper Stud Frt LH Lwr Step				
Alternator Leece-Neville 320A				
Headlights 4 Headlamps Halogen				
Frt Turn Signals Whelen 600 Series Halogen				
Headlights Below Frt Warn Lts				
Side Turn/Marker Lts LED				
Marker & ICC Lts Face Mnt LED				
Hdlt & Mrkr Lt Actv Rkr Sw/DRL				
Cornering Lts Whelen 500 Series 5mm LED on Bmpr Tail				
Ground Lts Resp Dr & Rkr Sw				
Step Lts				
Engine Compartment Work Lt (1)				
Interior Overhead Lights Weldon				
Light Tower Prov Reinforcement Pad				
Light Tower Model Will-Burt Nightscan 4.5 (NS-15) Optimum 240V 1500W QH (6)				
Lt Tower Orientation Parallel to Rear Wall				
Lt Tower Horizontal Justification Centered Left To Right				
Lt Tower Lt Head Orientation RH				
Lt Tower Fore/Aft Orientation Rear				
Do Not Move App Lt Flashing Red w/Alarm				
Mstr Warn Sw Pnl				
Inboard Frt Warn Lts Provision				
Horn Btn Sel Sw Elec Horn/Air Horn				
Air Horn Actv Strg Whl/RH Ft Sw				
Back-Up Alarm Ecco 575				
Instrumentation Standard				
Backlighting Color Red				
Aux Speedometer Analog				
Cam Rr & RH Teardrop w/Mon				
Panel Layout				
Cab Exterior Protection Front				
Fire Extinguisher Ship Loose				
Door Keys for Manual Locks (4)				
Warranty Cab and Chassis 2014 (1) Year				
Operation Manual Digital Copy (2)				
Engine & Transmission Operation Manual Hard Copy (2)				
Engine Service Manual Hard Copy Cummins ISC/ISL (2)				
As Built Wiring Diagrams Digital Copy				
End of Frame Cross Member				

11 Sperti Drive, Edgewood, KY 41017
(859)331-0360
FAX: (859)331-0399

Fire Apparatus and Custom Fabricators

DESCRIPTION	QTY	PRICE	STD. OPT	INCLUDED OPT.
CRESENT SPRINGS RESCUE PUMPER		$529,100.00		
CHASSIS MODIFICATIONS				
Rear Drop Frame Under Body and Tailboard - Steel	1		x	
Front Bumper Bumperettes - Rubber, Extended to Protect Q Siren	2			x
Front Bumper Extenion - 28"	1			x
Front Bumper Extension Storage - Aluminum (2 x Hyd Reels, 1 x 1.5" Trash line)	1			x
Front Bumper Extension Gravel Shield - Aluminum Treadplate	1			x
Hydraulic Reels Front Bumper Mount - Hannay EF Series Electric Reels	2			x
Hydraulic Reel Fairleads - 4 Way	2			x
Hydraulic Reels Rewind Switch - Momentary Adjacent to Each Reel	2			x
Rescue TooL Mounting- Front Bumper (2 Toold)	2			x
Side Winch / Rope Anchor Points - 2" Receiver Left and Right Under Body	2			x
Tire Chains - Rudd Rotogrip III	1			x
Rear Tow Eyes - Painted Under Rear Tailboard	2		x	
Tire Pressure Monitoring System - Valve Stem Low Pressure Indicators	1		x	
Wheels - Unfinished	1		x	
Crew Cab Compartments - Overhead Crew Area Storage Compartments w/ LED Lighting & Electrical Outlets	1			x
EMS Compartment - 1 Compartment Between rear Facing Crew Seats w/ LED Lighting & an Electrical Outlet	1		x	
Book & Map Storage - 1 Aluminum Rack w/ Velcro Fasteners	1		x	
Under Seat Storage - Crew Area Seats	2			x
Front Mud Flaps	1		x	
Rear Mud Flaps	1		x	
Fluid Identifcation Plate	1		x	
Fuel Type Label - Diesel	1		x	
Seating Label - Maximum Seating Of 2	1		x	
Vehicle Height Label	1		x	
Seatbelt Warning Label	1		x	
Riding On Step Warning Label - Rear of Body	1		x	
Helmet In Cab Warning Label	1		x	
NFPA Helmet Storage - Department To Mount In Body	1		x	
BODY - RESCUE PUMPER				
Body Construction - Combination Formed Sheet / Extruded	1		x	
Body Subframe - Aluminum Extruded	1		x	
Material - .160" and .190" 5052 Aluminum	1		x	
Body Mounting	1		x	
Polymer Isolation Strips - Chassis Frame	1		x	

11 Sperti Drive, Edgewood, KY 41017
(859)331-0360
FAX: (859)331-0399

SUMMIT
Fire Apparatus and Custom Fabricators

DESCRIPTION	QTY	PRICE	STD. OPT	INCLUDED OPT.
CRESENT SPRINGS RESCUE PUMPER		$529,100.00		
Construction - All Aluminum	1		x	
Body Dimensions - 16' (194") Long, 90" High, 96" Wide	1		x	
Compartment Interiors - Unfinished Aluminum	1		x	
Compartment Floors - Raised Sweep-out Type	1		x	
Rear Tail Board - 12 inch NFPA Aluminum Treadplate	1			x
Fenderettes - Polised Stainless Steel	2		x	
Wheel Well Liners - Full Removable Poly Liners	2		x	
Corrosion Protection Pkg - Anti Corrosion Compound and Nylon Spacers on All Fasteners	1		x	
Fuel Fill Pocket - Cast Aluminum Houseing w/ Door	1			x
Roof Top Compartments - Coffin Style Integral Formed Aluminum	1			x
Roof Top Compartments Interior False Wall To Protect Outsid Headrail	1			x
Roof Top Hose Bed - Aluminum Extruded Floor	1			x
Rear Access Ladder & Pike Pole Storage Compartment - Below Hosebed	1			x
Rood Top Landing And Step - ALuminum Treadplate / NFPA Tread Plate				
Compartmentation - 6-Bay				
L1 Compartment Dimensions - 66" Wide x 72" High Pump Compartment	1		x	
L1 Adjustable Shelf Hard ware -Delete (Pump Compartment)	1		x	
L2 Compartment Dimensions - 60" Wide x 72" High x 25.95" Deep	1		x	
L2 Adjustable Shelf Hard ware - P100 Aluminum Unistrut	4			x
L3 Compartment Dimensions - 60" Wide x 43" High x 25.95" Deep	1		x	
L3 Adjustable Shelf Hard ware - P100 Aluminum Unistrut	4			x
L4 Compartment Dimensions - 60" Wide x 72" High x 25.95" Deep (Lower Rear, Transverse)	1		x	
L4 Adjustable Shelf Hard ware - P100 Aluminum Unistrut	4			x
R1 Compartment Dimensions - 66" Wide x 72" High Pump Compartment			x	
R1 Adjustable Shelf Hard ware -Delete (Pump Compartment)				x
R2 Compartment Dimensions - 60" Wide x 72" High x 25.95" Deep	1		x	
R2 Adjustable Shelf Hard ware - P100 Aluminum Unistrut	4			x
R3 Compartment Dimensions - 60" Wide x 43" High x 25.95" Deep	1		x	
R3 Adjustable Shelf Hard ware - P100 Aluminum Unistrut	4			x
R4 Compartment Dimensions - 60" Wide x 72" High x 25.95" Deep (Lower Rear, Transverse)	1		x	

11 Sperti Drive, Edgewood, KY 41017
(859)331-0360
FAX: (859)331-0399

SUMMIT
Fire Apparatus and Custom Fabricators

DESCRIPTION	QTY	PRICE	STD. OPT	INCLUDED OPT.
CRESENT SPRINGS RESCUE PUMPER		$529,100.00		
R4 Adjustable Shelf Hard ware - P100 Aluminum Unistrut	4			x
Rear Compartment Dimensions - 44" Wide x 49" High x 28" Deep	1			
Rear Adjustable Shelf Hard ware - P100 Aluminum Unistrut	4			
Doors - Annodized ROM Roll Up Doors	1			x
Roof Top Compartments - Coffin Style	4			x
Roof Top Compartments Access Doors - Treadplate Aluminum, Hinged Shoe Box Style	4			x
Roof Top Storage - Open	1			x
BODY UPFIT:				
Roof Access Ladder - Zico Quic-Ladder	1			x
Roof Access Ladder Deployment Warning - Activate Compartment Ajar Light When Deployed	1			x
Adjustable Aluminum Shelves - (11)	11			x
Adjustable Aluminum Slideout Trays - (5)	5			x
Heavy Duty Slideout Tool Board - (3)	3			x
Aluminum Vertical Compartment Dividers - (7)	7			x
Electric Rewind Electrical Cord Reel w/ Junction Box - (2)	2			x
Articulating Slide Tray - (2)	2			x
Fixed Aluminum Shelf - (1)	1			x
Heavy Duty Slide Tray - (2)	2			x
Airbag Storage Dividers - (1)	1			x
SCBA/Fire Exyinguisher Storage - 3 Cylinder	4			x
Grab Rail - Apparatus Rear	1			x
Plastic Compartment Floor Tiling - All Shelving and Slide Trays	1			x
Floor Dry Hopper - Air Actuated in Roof Top Storage Area	1			x
Stainless Steel Guards - Lower Lip of Body Compartments	9			x
Cribbing Storage Provisions - Body Compartment	1			x
Cribbing Storage Access Door - Hinged Aluminum	1			x
Hose Bed Dividers - (2)	1			x
Hose Bed Cover - ROM Powered Roll Up	1			x
Fall Protection Barrier - Automatic Pneumatic Controlled by Roof Access Ladder	1			x
Air Connection - Chassis Supply, Located on Pump Panel	1			x
PUMP	1		x	
Pump - Hale 1500 GPM	1		x	
Gearbox - In Cab Pneumatic Shift	1		x	
Pump Shift Overide - Driverside Pump Panel	1			x

11 Sperti Drive, Edgewood, KY 41017
(859)331-0360
FAX: (859)331-0399

SUMMIT
Fire Apparatus and Custom Fabricators

DESCRIPTION	QTY	PRICE	STD. OPT	INCLUDED OPT.
CRESENT SPRINGS RESCUE PUMPER		$529,100.00		
Pump Seals - Mechanical	1		x	
Priming Pump - Oiless	1			x
Auxillary Cooler / Heat Exchanger - Pump/Engine Circulator	1		x	
Intake Relief Valve - Pressure Relief Valve	6		x	
Master Drain - Drivers Side Lower Pump Panel	1		x	
Drains - Quarter Turn Valves Drivers Side Pump Panel	1		x	
Thermal Releif Valve - Delete	1			x
Cooling Line - Delete	1			x
Plumbing - Stainless Steel & High Pressure Hose	1		x	
Valves - Akron 8000 Series Quarter Turn	1		x	
Pump Anode - Two	1			x
Pump Test - Manufacturer Class A NFPA 1901	1		x	
Suction Releif - Terminate Below Pump House Away From Work Area	1			x
Steamer Inlets - 6"	1		x	
6" Gated Inlets - Delete	2			x
MIV Contol -	2			x
MIV Contol Location -	1			x
Steamer Caps - 6" Long Handle Chrome	1		x	
Left Side Auxillary Intake - (1) 2.5" Aux Intake	1		x	
Left Side Auxillary Intake Control - Lever	1			x
Left Side Auxillary Intake Termination - Chrome Plug and Chain	1		x	
Right Side Auxillary Intake - (1) 2.5" Aux Intake	1		x	
Right Side Auxillary Intake Control - Electric	1		x	
Right Side Auxillary Intake Termination -Chrome Cap with Chain	1		x	
Pump Module - Full Width (96) Self-Supported Structure Independent of Body W/ Roll Up Doors	1			x
Pump Module To Body Flex Joint	1		x	
Pump Module - Traditional Side Mount	1			x
Pump Module Construction - Aluminum Extruded	1		x	
Pump Control Panel - Side Mount Control	1		x	
Dunnage Storage Area - Raised Equal With Body	1			x
Dunnage Storage Access - Painted Large Side Access Doors	4			x
Hose Well In Running Board - Drivers Side	1			x
Grab Handles - Two (2) Mounted to Module, One On Each Side	2		x	
Pump Panel Construction - Rubberized Aluminum	1			x
Valve Controls - Elkhart RC-10 With 5" HandWheel	8			x
Pressure Gauges - 2.5" Class One Line Gauges	2		x	
Master Gauges - Delete	1		x	
Pressure Governor - Class 1 TPG Plus	1			x

SUMMIT
Fire Apparatus and Custom Fabricators

DESCRIPTION	QTY	PRICE	STD. OPT	INCLUDED OPT.
CRESENT SPRINGS RESCUE PUMPER		$529,100.00		
Fuel Guage - Additional Guage On Pump Panel	1			x
Water Level Gauge - Class One 1 ITL	1		x	
U.L. Test Ports	1		x	
Data Plate - Driver Side Pump Panel	1		x	
Labels - All Intakes, Discharges, Drains & Gauges NFPA Labeled & Color Coded	1		x	
Tank To Pump Valve - 3" 1/4 Turn Ball Valve	1		x	
Tank Fill Valve - 1.5" 1/4 Turn Ball Valve	2		x	
Left Side Discharges - Two (2) 2.5"	2		x	
Left Side Discharge Control - Elkhart RC-10 With 5" HandWheel	2		x	
Left Side Discharge Termination - 2.5" Chrome Cap With Chain	2		x	
Right Side Forward Discharge -Two (2) 2.5"	2		x	
Right Side Forward Discharge Control - Elkhart RC-10 With 5" HandWheel	2		x	
Right Side Forward Discharge Termination - 2.5" Chrome Cap With Chain	2		x	
Right Side Rearward Discharge - One (1) 4"	1			x
Right Side Rearward Discharge Control - Electric	1			x
Right Side Rearward Discharge Termination - 4"- 5" Storz with Plug and Chain	1			x
Flow Meter - 4" Discharge	1			
Rear Left Discharges - One (1) 1/4 Turn Ball Valve	1			x
Rear Leftside Discharge Control - Elkhart RC-10 With 5" HandWheel	1			x
Rear LeftSide Discharge Termination - 2.5" Chrome Cap With Chain	1			x
Rear Right Right Discharges - Delete	1		x	
Rear Right Side Discharge Control - Delete	1		x	
Rear Right Side Discharge Termination - Delete	1		x	
Deluge Discharge - 3" Plumbed To Top Of Pump House	1			x
Deluge Contol - Elkhart RC-10 With 5" HandWheel	1			x
Deluge Discharge - 3" w/ 18" Telescoping Extension	1			x
Deluge Monitor - Elkhart 8297RF Remote Control w/ Nozzle	1			x
Speedlays- (2) 1.75" - Ahead of Pump Module W/ Removable Tray	2		x	
Speedlay Controls - Elkhart RC-10 With 5" HandWheel	2		x	
Speedlays- 2.5" - Ahead Pump Module W/ Removable Tray	1			x
Speedlay 2.5" Controls - Elkhart RC-10 With 5" HandWheel	1			x
Front Bumper Trashline/Jumpline - (1) 1.5" Discharge	1			x
Front Bumper Trashline Discharge Control - Electric	1			x
Front Bumper Discharge Termination - Delete	1			x

Fire Apparatus and Custom Fabricators

DESCRIPTION	QTY	PRICE	STD. OPT	INCLUDED OPT.
CRESENT SPRINGS RESCUE PUMPER		$529,100.00		
Pump Compartment Light - (1) Vista Strip LED Across Top (In Adddition To Door Lights)	1		x	
Foam System - Foam Logix 3.3 Dual Foam	1		x	
Foam Discharges - two (2) 2.5" rear discharges, (1) 2.5" Crosslay, (2) 1 ¾" Crosslays and the (1) 1 ¾" hose well located in front bumper.	6			x
Foam Control - Push / Pull Operators Panel	1			x
Foam Flush Control - Driver Side Pump Panell	1			x
Foam Strainer Clean Out - Drivers Side Pump Panel	1			x
Foam Selector - Manual Dual Tank Selector On Pum Panel	1			x
Foam Check Valves - Integral Injector Fitting & Waterway Check Valves	1			x
Flow Meter(s) - Foam System	1			x
Low Tank Level Switch - Foam Tank	1			x
Foam Up Load System - Foam Pro	1			x
Pull Out Pump Operators Platform - Left & Right side Pump Panel	2			x
TANK	1		x	
Booster Tank - UPF Poly 750	1		x	
ISO Certification - 9001:2008	1		x	
Construction - Pt3 Polypropylene	1		x	
Closed Curve Baffling	1		x	
Fill Tower W/Cover - Center Mount	1		x	
Vent Overflow - 4 Inch	1		x	
Sump	1		x	
3" Npt Threaded Outlet Bottom Of Sump	1		x	
Foam Cell - Two (2) 25 Gallon	2			x
Foam Drain - Delete	1			x
12 VOLT ELECTRICAL REQUIRMENTS				
12 Volt Elctrical System - Multiplex System	1		x	
Wiring Requirments - NFPA 1901	1		x	
SAE Practices & FMVSS Compliant	1		x	
Wiring - GXL Stranded Copper	1		x	
12V Dc Voltage Output Testing & Documentation	1		x	
Switch Panel - Cab mounted - One Master Switch Warning System	1		x	
Reserve Capacity Test:	1		x	
Alternator Performance Test At Idle:	1		x	
Alternator Performance Test At Full Load:	1		x	
Low Voltage Alarm Test:	1		x	
Documentation - NFPA Test Results	1		x	
Battery Disconnect Switch - Supplied Chassis Manufacturer	1		x	

SUMMIT
Fire Apparatus and Custom Fabricators

DESCRIPTION	QTY	PRICE	STD. OPT	INCLUDED OPT.
CRESENT SPRINGS RESCUE PUMPER		$529,100.00		
Battery Light - Green L.E.D. Dash Mounted	1		x	
Clearance / Marker Lights - Tecniq P2 L.E.D	24		x	
License Plate Bracket and Light - Arrow	1		x	
Brake Lights, - Whelen 600 Series Red L.E.D.	2		x	
Turn Lights - Whelen 600 Series Amber L.E.D.	2		x	
Backup Lights - Whelen 600 Series Clear L.E.D.	2		x	
Light Cluster Housing - Chrome	2		x	
Light Bar - Whelen 93" Freedom L.E.D.	1		x	
Blocking Right Away	1		x	
Whelen Mini NFPA Ultra Freedom Bars - On Cab Raised Roof	2			x
Lower Zone A Warning Lights - Whelen 600 Series L.E.D. Supplied Chassis Mfg	2		x	
Lower Zone B&D Intersection Lights - Whelen 600 Series L.E.D Front Bumper Tail	2		x	
Lower Zone B&D Intersection Light Chrome Flange - Whelen 6E flange	2		x	
Lower Zone B&D Midship Warning Lights - Whelen 600 Series On Cab Above Wheel Well	2		x	
Lower Zone B&D Midship Warning Light Chrome Flange - Whelen 6Eflange	2		x	
Lower Zone B&D Midship Warning Lights - Whelen 600 Series Rear Wheel Well	2		x	
Lower Zone B&D Midship Warning Light Chrome Flange - Whelen 6Eflange	2		x	
Upper Zone Warning Lights - Whelen 900 LED Lights (4 Zone C Altternating)	10			x
Traffic Advisor - Custom Recessed LED	1			x
Electric Siren - Whelen WS-295	1		x	
Speaker - (1) CPI SH2015 Flush Mount	2		x	
Mechanical Siren - Federal Q2B Front Bumper Mounted	1			x
Air Horns - Dual 21" Grover Stuttertone Front Bumper Mounted	2			x
Side Lights - (1) Left Rear Wheel Well (1) Right Rear Wheel Well	2			x
Compartment Lighting - ROM LED (2) Light Strips Each Door	18			x
Compartment Open Light - Red	1		x	
Hose Bed Lights - Vista Strip Lights (Either side of Hose Bed)	2			x
Ground Lighting Cab - 8 TecNiq LED				
Ground Lighting Body - 8 TecNiq LED	1		x	
Roof Top Compartment Lighting - LED	4			x
Roof Top Walkway Lighting - (6) LED	6			x
Battery Conditioner - Kussmaul Auto-Charge Super Kit w/ Auto-Eject	1			x

11 Sperti Drive, Edgewood, KY 41017
(859)331-0360
FAX: (859)331-0399

SUMMIT
Fire Apparatus and Custom Fabricators

DESCRIPTION	QTY	PRICE	STD. OPT	INCLUDED OPT.
CRESENT SPRINGS RESCUE PUMPER		$529,100.00		
Battery Charging Receptacle - Kussmaul Auto Eject	1			x
Battery Charge Indicator - Delete	1		x	
Rear Mounted Camera - Audiovox Installed on Rear of Body	1			x
Lite-Box Lanterns - (5) Mounted in Cab	5			x
Additional Interior Lighting - (2) Dual Map Lights Over Engine Tunnel	2			x
Antenna Installation - (2) Customer Supplied Antennas Mounted On Cab	1			x
SCENE LIGHTING - 12 VOLT				
Scene Lights - (6) FRC LED 900 Scene Lights	6			x
Brow Lights - (2) FRC FCA850-S50	2			x
Hooded Work Light - (2) Rear Body Mounted	2			x
120/240 VOLT REQUIREMENTS				
120/240 Wiring Standards - NEMA & NFPA 1901	1			x
Wiring - Fine Stranded Copper Type DLOC	1			x
Conduit Type - Liquid Tight Non Metallic	1			x
Dielectric Voltage Withstand Test	1			x
Certification Test OF Power Source	1			x
Generator - Smart Power HR-20 20KW Hydraulic	1			x
PTO - Chelsea Hot Shift PTO	1			x
Generator Performance Display - Smart Power Mounted on Pump Panel	1			x
Load Center/Breaker Box - Square D 20 Space	1			x
Circuit Breakers - (16) QO series	16			x
Remote Generator Activation - Front Bumper	1			x
Exterior Receptacles - Covered Duplex 5-20	4			x
Interior 120 Volt Receptacles - Cab, Duplex 5-15	1			x
Interior 120 Volt Receptacles - Body Compartrment, Duplex 5-15	4			x
220 Volt Receptacle - Body Compartment	1			x
Electric Cord - 200' Yellow	1			x
Electric Cord Ball Stop	1			x
Electric Junction Box - Circle D With 4 L5-20 Receptacles	1			x
Fair Lead, Cord Reel - Hannay 4 Way				
Juction Box Mounting Bracket - Aluminum R2	1			x
Rear Mount Tri-Pod Lights - FRC FCA100-M10 on FC-600 Tripods	2			x
Light Tower - Wil-Burt NS4.5-9000 Cab Mounted				
Light Tower Remote - Mounter Over Wheel Well Adjacent to Breaker Box	1			x
Light Tower Fairing - Alumiinum Cab Mounted, Painted to Match	1			x

11 Sperti Drive, Edgewood, KY 41017
(859)331-0360
FAX: (859)331-0399

Fire Apparatus and Custom Fabricators

DESCRIPTION	QTY	PRICE	STD. OPT	INCLUDED OPT.
CRESENT SPRINGS RESCUE PUMPER		$529,100.00		
Tower Up Indicator - Cab Mounted	1			x
PAINTING / STRIPING				
Undercoating	1			x
Wheels - Factory Aluminum Finish	1		x	
PPG Two Stage Urthane - Body Job Color	1		x	
NFPA Perimeter - 6" White Reflective Cab	1		x	
NFPA Perimeter - 6" White Reflective Body	1		x	
NFPA Chevron 6' Red/Amber Reflective - Body, Rear Door, Hose Bed Door	1			x
MISC. EQUIPMENT				
Wheel Chocks - Zico SAC-44 w/ Mounting Brackets Installed	2			x
Wiring Schematics Supplied	1		x	
Service Manual & Parts List Supplied	1		x	
WARRANTIES				
Limited Warranty (1-Year)	1		x	
Paint Warranty (7-Year)	1		x	
Electrical Warranty (10-Year)	1		x	
Body Structural Warranty (20-Year)	1		x	
Cab Paint Warranty (10 - Year)	1		x	
Cab Structural Warranty (10 - Year/100,000 Miles)	1		x	
Engine Warranty (5 - Year/100,000 Miles)	1		x	
Transmission Warranty (5 - Year)	1		x	
CHASSIS OPTIONS: Metro				
20" MFD Cab In Lieu Of 10" Raised Roof MFD Cab		$1,752.00		
10" Raised Roof LFD Cab In Lieu Of 10" Raised Roof MFD Cab		$3,204.00		
20" Raised Roof LFD Cab In Lieu Of 10" Raised Roof MFD Cab		$4,924.00		
330 Hp Cummins ISL In Lieu Of The 450 Hp Cummins ISL		-$9,100.00		
380 Hp Cummins ISL In Lieu Of The 450 Hp Cummins ISL		-$8,300.00		
400 Hp Cummins ISL In Lieu Of The 450 Hp Cummins ISL		-$722.00		
68 Galon Fuel Tank in Lieu Of the 50 Gallon (will reduce rear compartment size)		$166.00		
Weldon Multiplex V-Mux Chassis With Vista Display (Drivers Side)		$4,992.00		
Officer Side V-Mux Vista Display		$1,838.00		
Front Wheel 17" Disc Brakes		$409.00		
Michelin Rear M&S Grip Tires In Lieu Of Highway Read		$250.00		
Auto Tank Drains in Lieu Of Manual Drains		$121.00		

11 Sperti Drive, Edgewood, KY 41017
(859)331-0360
FAX: (859)331-0399

SUMMIT
Fire Apparatus and Custom Fabricators

DESCRIPTION	QTY	PRICE	STD. OPT	INCLUDED OPT.
CRESENT SPRINGS RESCUE PUMPER		$529,100.00		
Heated Wet Tank Auto Ejector		$123.00		
Black Door Handles And No Scuff Plates		$700.00		
Electric Door Locks In Lieu of Manual		$1,102.00		
Power Windows In Lieu Of Manual Roll Up		$2,017.00		
Xtreme Duty Interior		$3,800.00		
CHASSIS OPTIONS: Gladiator				
Gladiator Cab In Lieu of Metro		$25,600.00		
20" MFD Cab In Lieu Of 10" Raised Roof MFD Cab		$1,752.00		
10" Raised Roof LFD Cab In Lieu Of 10" Raised Roof MFD Cab		$4,838.00		
20" Raised Roof LFD Cab In Lieu Of 10" Raised Roof MFD Cab		$6,750.00		
500 HP Cummins ISX12 in lieu of ISL 450 HP Cummins		$33,500.00		
500 Hp Cummins ISX15 In Lieu Of The 450 Hp Cummins ISL		$37,400.00		
550 Hp Cummins ISX15 In Lieu Of The 450 Hp Cummins ISL		$40,100.00		
600 Hp Cummins ISX15 In Lieu Of The 450 Hp Cummins ISL		$44,600.00		
68 Galon Fuel Tank in Lieu Of the 50 Gallon (will reduce rear compartment size)		$166.00		
Weldon Multiplex V-Mux Chassis With Vista Display (Drivers Side)		$4,992.00		
Officer Side V-Mux Vista Display		$1,838.00		
Front Wheel 17" Disc Brakes		$409.00		
Michelin Rear M&S Grip Tires In Lieu Of Highway Read		$250.00		
Auto Tank Drains in Lieu Of Manual Drains		$121.00		
Heated Wet Tank Auto Ejector		$123.00		
Chrome Door Handles With Scuff Plates		$700.00		
Electric Door Locks In Lieu of Manual		$1,102.00		
Power Windows In Lieu Of Manual Roll Up		$2,017.00		
Xtreme Duty Interior		$3,800.00		

11 Sperti Drive, Edgewood, KY 41017
(859)331-0360
FAX: (859)331-0399

ENGINEERED TO PERFORM

SPARTAN CHASSIS

SERIES 75 AERIAL

Comprised of an all-steel chassis, this Aerial features a 75 ft. ladder, **providing the option** to operate as an attack engine or ladder truck. Easy to maneuver in tight areas, the Series 75 Aerial enables fast knockdown with its **500 gallon water capacity**.

Offering **great overall serviceability**, this line of Aerials will be available* in 75 ft. and 103 ft. ladders as well as a 100 ft. platform. Fully NFPA compliant, all three options offer great overall performance, in addition to **low cost of ownership**.

OUT & DOWN H-STYLE OUTRIGGERS

Delivers excellent leveling capability on steep or uneven terrain

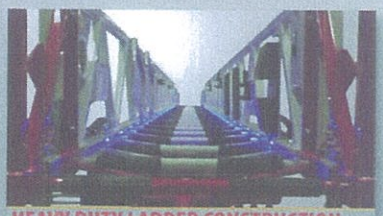

HEAVY DUTY LADDER CONSTRUCTION

Yields high strength, lasting durability, and low deflection for safer climbing

* 103 ft. ladder and 100 ft. platform available in 2014.

The included images of the Series 75 Aerial do not represent all available options. For additional information and to locate your Regional Sales Manager, scan the QR code or visit spartanchassis.com/series75.

SPARTANCHASSIS.COM/SERIES75

Fire Apparatus and Custom Fabricators

DESCRIPTION	QTY	PRICE	STD. OPT	INCLUDED OPT.
SUMMIT 75' QUINT		$589,500.00		
CHASSIS				
Metro Star	1			
Summit Fire (SUM1001)				
Model Year - 2015				
Country of Service United States Of America				
Apparatus Type Rear Mount Quint				
Rear Mount Aerial Device Series 75 MUX				
Vehicle Type Straight Truck				
Axle Configuration 4x2 (Rear Axle Drive Only)				
GAWR Front 21500#				
GAWR Rear 31000#				
Pump Provision Driveline Midship				
Cab Style MFD 10" Raised Roof				
Occupant Protection Advanced Protection System				
Cab Frt Fascia Classic				
Cab Frt Grille Hinged Classic Styled				
Cab Undercoat				
Cab Side Drip Rail				
Cab Paint Exterior Single Color				
Cab Paint Manufacturer PPG				
Cab Paint Primary/Lower Color No Selection/TBD				
Cab Paint Warranty 2015 (10) Year/100,000 Miles				
Cab Paint Int Zolatone Silver Gray				
Cab Entry Doors (4)				
Cab Entry Door Type Full Length				
Cab Insulation				
Cab Roof Trench 50"W x 10"D				
Cab Structural Warranty 2015 (10) Year/100,000 Miles				
Cab Test Information Crash Test ECE-R29/SAE J2420/SAE J2422				
Elec System 12V DC MUX				
MUX Display Weldon Touchscreen IV LH Sw Pnl				
Data Recording Sys Vehicle Data Weldon MUX				
Accessory Pwr & Gnd Stud 40A Batt Dir & 15A Ign Sw				
Aux Acc Pwr & Gnd Stud Bhd Sw Pnl 40A Mstr Sw				
Addl Acc Pwr 10 Fuse Pnl Bhd Off Seat w/40A Fuse Batt Dir				
Exterior Electrical Terminal Coating Spray On Plasti Dip				
Engine Diesel 450HP Cummins ISL9 - EPA 2013				
Cab Engine Tunnel Small/Medium				
DPF Ctrl Regeneration Sw & Inhibit Sw				
Engine Programming High Idle Speed 1250 RPM				
Engine High Idle Ctrl Manual and Automatic w/V-MUX				
Engine Programming Road Speed Governor Enabled				

Fire Apparatus and Custom Fabricators

DESCRIPTION	QTY	PRICE	STD. OPT	INCLUDED OPT.
SUMMIT 75' QUINT		$589,500.00		
Aux Engine Brake Compression Brake w/VG Turbo				
Aux Engine Brake Ctrl Off/Low/Med/High MUX				
Elec Engine Oil Level Indicator				
Fluid Fills Fwd For Med Displacement Cap				
Engine Drain Plug				
Engine Warranty Cummins (5) Year/100,000 Miles				
Engine Program Rmt Throttle On				
Engine Programming Idle Speed 700 RPM				
Engine Fan Drive Direct				
Engine Cooling Sys Serial Flow Medium				
Engine Cooling System Protection Light Duty Skid Plate				
Engine Coolant Extended Life				
Elec Low Coolant Level Indicator				
Engine Pump Heat Exchanger				
Coolant Hoses Silicone Heater & Radiator w/Cab Int Rubber Hoses				
Engine Air Intake Filtration and Restriction w/Replaceable Element				
Air Intake Protection Light Duty Skid Plate				
Eng Exhaust Sys Under Frm RH Outboard w/DPF/SCR Inline				
Diesel Exhaust Fluid Tank LH 6 Gal Fill Thru Rr Step				
Engine Exh Acc Exh Temp Mitigation				
Engine Exhaust Wrap				
Transmission Allison 3000 EVS				
Transmission Mode Programming 5th Startup/6th Mode				
Transmission Feature Programming Allison Gen V-E I/O Package 198/Pumper				
Transmission GEN V-E Shift Sel Key Pad/Push Button				
Elec Transmission Oil Level Indicator				
2nd Gear Pre-Select				
Transmission Cooling System				
Transmission Drain Plug				
Transmission Warranty Allison (5) Year				
LH PTO Spartan Sply				
LH PTO Model Chelsea 278-XSFJP-B3RA				
PTO Location 8:00/4:00				
PTO Ctrl LH Aerial PTO Prog Vista Actv Labeled Aerial On/Off/Active w/Neutral				
Driveline Spicer 1710 HD				
Midship Pump Jackshaft Only				
Midship Pump/Gearbox Model Hale QMAX				
Midship Pump Gearbox Drop Hale "L"				
Midship Pump Ratio 2.28:1 (23)				
Midship Pump Location C/L Suction to C/L Rear Axle 80.0"				

SUMMIT
Fire Apparatus and Custom Fabricators

DESCRIPTION	QTY	PRICE	STD. OPT	INCLUDED OPT.
SUMMIT 75' QUINT		$589,500.00		
Fuel Filter/Wtr Separator Fleetguard FS1003 w/Lt & Alarm				
Fuel Lines Nylon				
Electric Fuel Primer Engine Sply Electric Lift Pump				
Fuel Tank 50 Gallon				
Fuel Tank Fill Port LH Rwd/RH Mid				
Frt Axle Meritor MFS 21500# Beam				
Front Axle Warranty Meritor 2015				
Frt Wheel Bearing Lube Oil				
Frt Shock Absorbers Bilstein				
Frt Suspension 9 Leaf 20000-21500#				
Steering Column/Wheel Tilt/Telescopic 18" 4 Spoke				
Elec Power Steering Fluid Level Indicator				
Power Steering Pump TRW				
Front Axle Cramp Angle 48L/44R Degrees				
Power Steering Gear TRW TAS 65 w/Assist				
Chassis Alignment				
Rear Axle 33000# Meritor RS-30-185				
Rear Axle Warranty Meritor 2015				
Rear Axle Differential Lubrication Oil				
Rear Wheel Bearing Lubrication Oil				
Vehicle Top Speed 65 MPH				
Rear Susp Reyco 79KB Spring 21000-31500# Conventional				
Frt Tire 425/65R 22.5 Michelin XZY3				
Rear Tire 315/80R 22.5 Michelin XDN2 Grip				
Rear Axle Ratio 6.14				
Tire Pressure Equalization System Crossfire Voucher				
Tire Pressure Ind Frt Only Pop Up Voucher				
Frt Wheel Accuride 22.5 x 12.25 Steel				
Rr Whl Accuride 22.5 x 9.00 Steel/Alum				
Wheel Paint Primary/Lower Cab Color				
Wheel Guards Between Dual Rear Wheels				
Brake System ABS/ATC/ESC Sgl Axle				
Frt Brakes S-Cam Drum 16.5" x 6"				
Rr Brakes S-Cam Drum 16.5" x 7" Cast Iron Shoe				
Prk Brake Rr Wheels Only				
Prk Brake Ctrl Ctr Tunnel Mnt				
Frt Brake Slack Adjusters Meritor				
Rr Brake Slack Adjusters Haldex				
Air Dryer Wabco System Saver 1200 Bhd LH Batt Box				
Frt Brake Chambers MGM Type 30				
Rr Brake Chambers TSE 30/36 Long Stroke				
Air Compressor Wabco SS318 18.7 CFM				
Air Governor Mnt on Air Dryer Bracket				
Moisture Ejectors Manual/Auto Wet Tank				

11 Sperti Drive, Edgewood, KY 41017
(859)331-0360
FAX: (859)331-0399

SUMMIT
Fire Apparatus and Custom Fabricators

DESCRIPTION	QTY	PRICE	STD. OPT	INCLUDED OPT.
SUMMIT 75' QUINT		$589,500.00		
Air Sply Lines Nylon				
Rear Air Tank Mnt Any Bhd Rear Axle Perpendicular w/Frame				
Wheelbase 200.0"				
Rear Overhang 47.0"				
Frame Double Channel 35.00" Width				
Frame Warranty Lifetime 2015				
Frame Paint Powder Coat Black				
Frt Bumper Stainless Steel Flat				
Frt Bumper Extension Length 18"				
Frt Bumper Extension Frame Width 48.25"				
Air Horn - Delete				
Air Horn Location - Delete				
Air Horn Reservoir (1) 1200 Cu In				
Frt Bumper Tow Hooks Painted Side Rwd				
Cab Tilt System				
Cab Tilt Ctrl Receptacle Temp				
Cab Windshield				
Glass Frt Dr Roll Down/XDuty Regulator				
Glass Tint Frt Dr Automotive Green				
Glass Rr Dr RH Roll Down/XDuty Regulator				
Glass Tint Rr Door RH Automotive Green				
Glass Rr Dr LH Roll Down/XDuty Regulator				
Glass Tint Rr Door LH Automotive Green				
Glass Side Mid RH Fxd 16"W x 26"H				
Glass Tint Side Mid RH Automotive Green				
Glass Side Mid LH Fxd 16"W x 26"H				
Glass Tint Side Mid LH Automotive Green				
Climate Ctrl Htr Defroster Frt Ovrhd/Htr A/C Tunnel Mnt				
Climate Control Drain Gravity				
Climate Ctrl Actv Device Mnt Ovrhd/Device Mnt Tunnel				
A/C Condenser Location Roof Mnt Mid LH				
A/C Compressor Large Capacity				
Under Cab Insulation Engine Tunnel				
Interior Trim Floor				
Interior Trim Vinyl				
Rear Wall Interior Trim Vinyl				
Header Trim ABS				
Trim Center Dash ABS				
Trim LH Dash ABS				
Trim RH Dash ABS Glove Cmpt/MDT Prov				
Eng Tnl Trim Flr Mat				
Step Trim Grip Strut Lwr Flex-Tred Mid				
Under Cab Access Door Rear Step LH Painted				
Interior Door Trim Painted				

Fire Apparatus and Custom Fabricators

DESCRIPTION	QTY	PRICE	STD. OPT	INCLUDED OPT.
SUMMIT 75' QUINT		$589,500.00		
Door Trim Customer Nameplate				
Cab Dr Trim Reflective Vert Stripe/6" Chevron w/Logo				
Interior Grab Handle 'A' Pillar 11" Molded				
Interior Grab Handle Frt Door Horiz 9"				
Int Grab Handle Rr Dr Alum Window Span 30" Black Powder Coat				
Interior Trim Vinyl Color Gray				
Interior Trim Sunvisor Vinyl				
Interior ABS Trim Color Gray				
Interior Floor Mat Color Gray				
Cab Paint Int Dr Trim Zolatone Silver Gray				
Dash Pnl Group 3-Pnl				
Switches Ctr Pnl 6 Upr LH				
Switches Left Pnl 1 Wiper				
Switches Right Pnl 3 Far RH Ctr				
Seat Belt Warn Vista Display w/VDR				
Seat Material Ballistic				
Seat Color Gray/Red Seat Belts				
Seat Back Logo Spartan Chassis				
Seat Driver Bostrom Firefighter 4-Way Air Non-ABTS				
Seat Back Driver Non-SCBA Non-ABTS				
Seat Mounting Driver				
Occupant Protection Driver Advanced Protection System				
Seat Officer Bostrom Firefighter 2-Way Manual ABTS				
Seat Back Officer Non-SCBA ABTS				
Seat Mounting Officer				
Occupant Protection Officer Advanced Protection System				
Seat Belt Orientation Crew Outboard Shoulder To Inboard Hip				
Seat RFO Location (2) R/L				
Seat Crew RFO Bostrom Firefighter Fixed				
Seat Back RFO SCBA Bostrom SecureAll w/Quick-Adjust				
Seat Mounting Rear Facing Outer				
Occupant Protection RFO Advanced Protection System				
Seat FFC Location (2) Ctr				
Seat Crew FFC Bostrom Firefighter Flip-Up				
Seat Back FFC SCBA Bostrom SecureAll w/Quick-Adjust				
Occupant Protection FFC Advanced Protection System				
Seat Frm Fwd Fcg Dual				
Seat Frm Fwd Fcg Strg Acc Dr (2) R/L Sd				
Seat Mounting Forward Facing Center				
Cab Frt Undrst Strg Acc Dr				
Seat Compartment Door Finish Zolatone Silver Gray				
Windshield Wiper System Single Motor				
Electronic Windshield Fluid Level Indicator				

11 Sperti Drive, Edgewood, KY 41017
(859)331-0360
FAX: (859)331-0399

Fire Apparatus and Custom Fabricators

DESCRIPTION	QTY	PRICE	STD. OPT	INCLUDED OPT.
SUMMIT 75' QUINT		$589,500.00		
Cab Door Hardware Black				
Door Locks Manual				
Grab Handles SS 18"				
Mirror Aerodynamic Retrac 613265 Rmt				
Cab Fender Alum Wide				
Cab Ext Frt & Side Emblems w/Side Emblem Integrated Model Nameplate				
Cab Exterior Model Nameplate Metro Star Advanced Protection System w/Emblem				
Ign Mstr Sw w/Keyless Start				
Batt (6) Group 31 Harris				
Batt Tray (2) R/L Steel				
Batt Box Cover (2) Steel w/Black Handles				
Batt Cables				
Batt Jumper Stud Frt LH Lwr Step				
Alternator Leece-Neville 270A				
Headlights 4 Headlamps Halogen				
Frt Turn Signals Whelen 600 Series Halogen				
Headlights Below Frt Warn Lts				
Side Turn/Marker Lts LED				
Marker & ICC Lts Face Mnt LED				
Hdlt & Mrkr Lt Actv MUX/DRL				
Ground Lts Resp Side Dr & Vista				
Step Lts LED				
Engine Cmpt Work Lt (1)				
Interior Overhead Lts Weldon w/Front Map Lts/MUX Actv				
Do Not Move App Lt Flashing Red w/Alarm				
Mstr Warn Sw MUX				
Headlight Flasher Alternating				
Headlight Flasher Sw MUX				
Inboard Frt Warn Lts Whelen 600 Super LED Chrm Bezel				
Inboard Frt Warn Lts Color Red				
Frt Warn Sw Vista				
Horn Btn Sel Sw Elec Horn/Air Horn MUX				
Air Horn Actv Strg Whl/RH Ft Sw				
Back-Up Alarm Ecco 575				
Instrumentation Standard				
Backlighting Color Red				
Hour Meter Honeywell in Instrument Pnl for LH PTO				
Panel Layout				
Aerial Device 75' Rear Mount Steel Telescoping Turntable Ladder				
Aerial Device Waterway System Series 75 w/Rr Inlet				
Aerial Device Waterway Flow Meter Class 1 Flow Minder				

11 Sperti Drive, Edgewood, KY 41017
(859)331-0360
FAX: (859)331-0399

Fire Apparatus and Custom Fabricators

DESCRIPTION	QTY	PRICE	STD. OPT	INCLUDED OPT.
SUMMIT 75' QUINT		$589,500.00		
Aerial Electric Monitor Akron 3578 Auto Stow				
Aerial Electric Nozzle Akron Akromatic 1250 Master Stream				
Rear Aerial Device Outriggers 16' Stance				
Aerial Device Aux Outrigger Pads Single Set Alum				
Aerial Device Outrigger Ground Lights (2) Halogen				
Aerial Device Outrigger Warn Lights (4) Halogen Red 4" Round				
Aerial Device Emergency Hydraulic Ladder Pump 12V				
Aerial Device Turntable Side Hosebed Access				
Turntable Deck Access Sgl Handrail Opening w/Safety Chain				
Turntable Ctrl Station Rear Mnt Aerial Ladder Drv Sd				
Turntable Work Lights (5) Halogen in Turntable Step Cvr				
Aerial Ladder Fly Tip Step (1) Folding Step				
Aerial Device Spot Light Unity Single Spot Ladder Tip				
Aerial Device Tracking Spot Light (2) Unity Spot				
Aerial Device AC Electrical Power (2) Cable OEM Conn at Ladder Rotation Swivel				
Aerial Ladder Rung Illumination (2) LED Pods Per Rung				
Apparatus Level Indicator (2), (1) Side-to-Side and (1) Fore/Aft Shiploose				
Aerial Comm System Atkinson Two position Intercom				
Aerial Device Paint PPG White FBCH 2185				
Aerial Device Lift Cylinder Paint PPG White FBCH 2185				
Aerial Device Travel Rest Paint PPG Black FBCH 9000				
Aerial Outrigger Paint PPG Silver Mtlc FBCH 33723				
Aerial Torque Box/Turntable/Control Station Paint PPG Black FBCH 9000				
Aerial Extension/Retraction Cylinder Paint PPG Black FBCH 9000				
Aerial Device Tip Paint PPG White FBCH 2185				
Aerial Device Operation Manuals (2) Hard Copy w/(2) Digital Parts Manuals				
Aerial Device As Built Wiring Diagram Digital Copy (2)				
Aerial Device As Built Hydraulic Diagram Digital Copy (2)				
Aerial Device Warranty 2015 Ladder w/Waterway General Coverage				
Aerial Device Training (3) Days				
Cab Exterior Protection Front				
Fire Extinguisher Ship Loose				
Door Keys for Manual Locks (4)				
Diagnostic Software Occupant Protection Advanced Protection System				
Warranty Cab and Chassis 2015 (2) Year				
Cab and Chassis Labeling Language English				

SUMMIT
Fire Apparatus and Custom Fabricators

DESCRIPTION	QTY	PRICE	STD. OPT	INCLUDED OPT.
SUMMIT 75' QUINT		$589,500.00		
Chassis Operation Manual Digital Copy (2)				
Eng & Trans Operation Man Eng Hard Copy/Trans Digital/Eng Owner Digital				
Cab/Chassis As Built Wiring Diagrams Digital Copy (2)				
Sales Terms				
End of Frame Cross Member				
CHASSIS MODIFICATIONS				
Front Bumper Extenion - Factory Extension	1		x	
Front Bumper Extension Storage - Delete	1		x	
Front Bumper Extension Gravel Shield - Aluminum Treadplate	1			x
Tire Chains - Delete	1		x	
Rear Tow Eyes - Painted Under Rear Tailboard	2		x	
Tire Pressure Monitoring System - Valve Stem Low Pressure Indicators	1		x	
Wheels - Unfinished	1		x	
Front Mud Flaps	1		x	
Rear Mud Flaps	1		x	
Fluid Identifcation Plate	1		x	
Fuel Type Label - Diesel	1		x	
Seating Label - Maximum Seating Of 2	1		x	
Vehicle Height Label	1		x	
Seatbelt Warning Label	1		x	
Riding On Step Warning Label - Rear of Body	1		x	
Helmet In Cab Warning Label	1		x	
NFPA Helmet Storage - Department To Mount In Body	1		x	
BODY - Aerial				
Body Construction - Combination Formed Sheet / Extruded	1		x	
Body Subframe - Aluminum Extruded	1		x	
Material - .160" and .190" 5052 Aluminum	1		x	
Body Mounting	1		x	
Polymer Isolation Strips - Chassis Frame	1		x	
Construction - All Aluminum	1		x	
Body Dimensions - 16' Long, 90" High, 100" Wide	1		x	
Compartment Interiors - Unfinished Aluminum	1		x	
Compartment Floors - Raised Sweep-out Type	1		x	
Fenderettes - Polised Stainless Steel	2		x	
Wheel Well Liners - Full Removable Poly Liners	2		x	
Corrosion Protection Pkg - Anti Corrosion Compound and Nylon Spacers on All Fasteners	1		x	
Fuel Fill Pocket - Cast Aluminum Houseing w/ Door	1			x
Right Side Hose Bed Storage - Aluminum Extruded Floor	1		x	

11 Sperti Drive, Edgewood, KY 41017
(859)331-0360
FAX: (859)331-0399

SUMMIT
Fire Apparatus and Custom Fabricators

DESCRIPTION	QTY	PRICE	STD. OPT	INCLUDED OPT.
SUMMIT 75' QUINT		$589,500.00		
Rear Access Ladder & Pike Pole Storage Compartment - Below Turn table	1		x	
Turntable Access Steps, Access landing	1		x	
COMPARTMENTATION - 7-Bay				
L1 Compartment Dimensions - 60" Wide x 70" High x 14" Deep Upper, 25.95" Deep Lower	1		x	
L1 Adjustable Shelf Hard ware - P100 Aluminum Unistrut	1		x	
L2 Compartment Dimensions - 23" Wide x 38" High x 14" Deep	1		x	
L2 Adjustable Shelf Hard ware - P100 Aluminum Unistrut	4			x
L3 Compartment Dimensions - 55" Wide x 28" High x 14" Deep	1		x	
L3 Adjustable Shelf Hard ware - P100 Aluminum Unistrut	4			x
L4 Compartment Dimensions - 19" Wide x 62" High x 14" Deep upper, 25.95" Deep Lower	1		x	
L4 Adjustable Shelf Hard ware - P100 Aluminum Unistrut	4			x
R1 Compartment Dimensions - 60" Wide x 70" High x 14" Deep Upper, 25.95" Deep Lower			x	
R1 Adjustable Shelf Hard ware -Delete (Pump Compartment)				x
R2 Compartment Dimensions - 42" Wide x 28" High x 25.95" Deep	1		x	
R2 Adjustable Shelf Hard ware - P100 Aluminum Unistrut	4			x
Rear Ladder Compartment Dimensions - 36" Wide x 36" High	1			
Compartment Doors - ROM Roll Up Doors	7			x
Door Finish - Anodized	1		x	
Top Seal - Drip Rail With Wiper	7		x	
Internal Drip Pans - Delete	1		x	
Door Locks - Delete	1		x	
BODY UPFIT:				
Turn Table Access - Zico Quic-Ladder	1			x
Roof Access Ladder Deployment Warning - Activate Compartment Ajar Light When Deployed	1			x
Grab Rail - Apparatus Rear	1			x
Right Side Rear Hose Bed	1		x	
Hose Bed Dividers - 1	1		x	
Hose Bed Cover - Vinyl Tarp Cover with buckles	1		x	
Chrome Rear Stanchions For Beacons	2		x	
PUMP	1		x	
Pump - Hale 1500 GPM	1		x	
Gearbox - In Cab Pneumatic Shift	1		x	
Pump Shift Overide - Driverside Pump Panel	1			x

11 Sperti Drive, Edgewood, KY 41017
(859)331-0360
FAX: (859)331-0399

Fire Apparatus and Custom Fabricators

DESCRIPTION	QTY	PRICE	STD. OPT	INCLUDED OPT.
SUMMIT 75' QUINT		$589,500.00		
Pump Seals - Mechanical	1		x	
Priming Pump - Oiless	1			x
Auxillary Cooler / Heat Exchanger - Pump/Engine Circulator	1		x	
Intake Relief Valve - Pressure Relief Valve	6		x	
Master Drain - Drivers Side Lower Pump Panel	1		x	
Drains - Quarter Turn Valves Drivers Side Pump Panel	1		x	
Thermal Relief Valve - Delete	1			x
Cooling Line - Delete	1			x
Plumbing - Stainless Steel & High Pressure Hose	1		x	
Valves - Hale Stainless Series Quarter Turn	1		x	
Pump Anode - One	1			x
Pump Test - Manufacturer Class A NFPA 1901	1		x	
Suction Releif - Terminate Below Pump House Away From Work Area	1			x
Steamer Inlets - 6"	1		x	
6" Gated Inlets - Delete	2		x	
MIV Contol - Delete	2		x	
MIV Contol Location - Delete	1		x	
Steamer Caps - 6" Long Handle Chrome	1		x	
Left Side Auxillary Intake - (1) 2.5" Aux Intake	1		x	
Left Side Auxillary Intake Control - Lever	1			x
Left Side Auxillary Intake Termination - Chrome Plug and Chain	1		x	
Right Side Auxillary Intake - (1) 2.5" Aux Intake	1		x	
Right Side Auxillary Intake Control - Electric	1		x	
Right Side Auxillary Intake Termination -Chrome Cap with Chain	1		x	
Pump Module - 72" Width Self-Supported Structure Independent of Body	1			x
Pump Module To Body Flex Joint	1		x	
Pump Module - Traditional Side Mount	1			x
Pump Module Construction - Aluminum Extruded	1		x	
Pump Control Panel - Side Mount Control	1		x	
Dunnage Storage Area - Delete	1			x
Grab Handles - Two (2) Mounted to Module, One On Each Side	2		x	
Pump Panel Construction - Stainless Steel	1			x
Valve Controls - Class One Locking Push Pull	8			x
Pressure Gauges - 2.5" Class One Line Gauges	2		x	
Master Gauges - 3.5"	1		x	
Pressure Governor - Class 1 TPG Plus	1			x
Auxiliary Fuel Guage - Delete	1			x
Water Level Gauge - Class One 1 ITL	1		x	
U.L. Test Ports	1		x	

SUMMIT
Fire Apparatus and Custom Fabricators

DESCRIPTION	QTY	PRICE	STD. OPT	INCLUDED OPT.
SUMMIT 75' QUINT		$589,500.00		
Data Plate - Driver Side Pump Panel	1		x	
Labels - All Intakes, Discharges, Drains & Gauges NFPA Labeled & Color Coded	1		x	
Tank To Pump Valve - 3" 1/4 Turn Ball Valve	1		x	
Tank Fill Valve - 1.5" 1/4 Turn Ball Valve	2		x	
Left Side Discharges - Two (2) 2.5"	2		x	
Left Side Discharge Control - Class 1 Locking Push / Pull	2		x	
Left Side Discharge Termination - 2.5" Chrome Cap With Chain	2		x	
Right Side Forward Discharge -Two (2) 2.5"	2		x	
Right Side Forward Discharge Control - Class 1 Locking Push / Pull	2		x	
Right Side Forward Discharge Termination - 2.5" Chrome Cap With Chain	2		x	
Right Side Rearward Discharge - One (1) 2.5"	1		x	
Right Side Rearward Discharge Control - Class 1 Locking Push / Pull	1		x	
Right Side Rearward Discharge Termination - Chrome Cap and Chain	1		x	
Large Diameter Discharge - One (1) Akron 4" Electric	1		x	
Large Diameter Discharge Control - Electric	1		x	
Large Diameter Discharge Termination - Aerial Waterway	1			x
1.75" Crosslays Above of Pump Module - (2) 1.75"	2		x	
Crosslay Controls - Class 1 Locking Push / Pull	2		x	
2.5 " Crosslays Above Pump Module - Delete	1		x	
Crosslay 2.5" Controls - Delete	1		x	
Front Bumper Trashline/Jumpline - Delete	1		x	
Front Bumper Trashline Discharge Control - Delete	1		x	
Front Bumper Discharge Termination - Delete	1		x	
Pump Compartment Light - (1) Vista Strip LED Across Top (In Adddition To Door Lights)	1		x	
Foam System - Delete	1		x	
Foam Control - Delete	1		x	
Foam Flush Control - Delete	1		x	
Foam Strainer Clean Out - Delete	1		x	
Foam Selector - Delete	1		x	
Foam Check Valves - Delete	1		x	
Flow Meter(s) - Delete	1		x	
Low Tank Level Switch - Delete	1		x	
Foam Up Load System - Delete	1		x	
Pull Out Pump Operators Platform - Delete	1		x	
TANK	1		x	
Booster Tank - UPF Poly 500	1		x	
ISO Certification - 9001:2008	1		x	

Fire Apparatus and Custom Fabricators

DESCRIPTION	QTY	PRICE	STD. OPT	INCLUDED OPT.
SUMMIT 75' QUINT		$589,500.00		
Construction - Pt3 Polypropylene	1		x	
Closed Curve Baffling	1		x	
Fill Tower W/Cover - Center Mount	1		x	
Vent Overflow - 4 Inch	1		x	
Sump	1		x	
3" Npt Threaded Outlet Bottom Of Sump	1		x	
Foam Cell - Delete	1		x	
Foam Drain - Delete	1		x	
12 VOLT ELECTRICAL REQUIRMENTS				
12 Volt Elctrical System - Multiplex System	1		x	
Wiring Requirments - NFPA 1901	1		x	
SAE Practices & FMVSS Compliant	1		x	
Wiring - GXL Stranded Copper	1		x	
12V Dc Voltage Output Testing & Documentation	1		x	
Switch Panel - Cab mounted - One Master Switch Warning System	1		x	
Reserve Capacity Test:	1		x	
Alternator Performance Test At Idle:	1		x	
Alternator Performance Test At Full Load:	1		x	
Low Voltage Alarm Test:	1		x	
Documentation - NFPA Test Results	1		x	
Battery Disconnect Switch - Supplied Chassis Manufacturer	1		x	
Battery Light - Green L.E.D. Dash Mounted	1		x	
Clearance / Marker Lights - Tecniq P2 L.E.D	21		x	
License Plate Bracket and Light - Arrow	1		x	
Brake Lights, - Whelen 600 Series Red L.E.D.	2		x	
Turn Lights - Whelen 600 Series Amber L.E.D.	2		x	
Backup Lights - Whelen 600 Series Clear L.E.D.	2		x	
Light Cluster Housing - Chrome	2		x	
Light Bar - Delete	1		x	
Blocking Right Away	1		x	
Whelen Mini NFPA Ultra Freedom Bars - On Cab Raised Roof	2			x
Lower Zone A Warning Lights - Whelen 600 Series L.E.D. Supplied Chassis Mfg	2		x	
Lower Zone B&D Intersection Lights - Whelen 600 Series L.E.D Front Bumper Tail	2		x	
Lower Zone B&D Intersection Light Chrome Flange - Whelen 6E flange	2		x	
Lower Zone B&D Midship Warning Lights - Whelen 600 Series On Cab Above Wheel Well	2		x	
Lower Zone B&D Midship Warning Light Chrome Flange - Whelen 6Eflange	2		x	

11 Sperti Drive, Edgewood, KY 41017
(859)331-0360
FAX: (859)331-0399

Fire Apparatus and Custom Fabricators

DESCRIPTION	QTY	PRICE	STD. OPT	INCLUDED OPT.
SUMMIT 75' QUINT		$589,500.00		
Lower Zone B&D Midship Warning Lights - Whelen 600 Series Rear Wheel Well	2		x	
Lower Zone B&D Midship Warning Light Chrome Flange - Whelen 6Eflange	2		x	
Lower Zone B,D, & C Rear & Side Warning Light - Power Arc PA180 LED	2			
Upper Zone C Warning Lights - L31HAFN Drivers Side & L31HRFN LED Beacon	2			x
Traffic Advisor - Rwhelen TAL837 LED	1			x
Electric Siren - Whelen WS-295	1		x	
Speaker - (1) CPI SH2015 Flush Mount	2		x	
Mechanical Siren - Delete	1			x
Air Horns - Dual 24" Hadley Front Bumper Mounted	2			x
Compartment Lighting - TecNiq, Single Light Strip Each Door	18			x
Compartment Open Light - Red	1		x	
Hose Bed Light - Single Spot Light	1		x	
Ground Lighting Cab - Supplied by Chasis Manufacturer	1		x	
Ground Lighting Body - 8 TecNiq LED	1		x	
Battery Conditioner - Kussmaul Auto-Charge Super Kit w/ Auto-Eject	1			x
Battery Charging Receptacle - Kussmaul Auto Eject	1			x
Battery Charge Indicator - Delete	1		x	
Rear Mounted Camera - Mito Installed on Rear of Body	1			x
PAINTING / STRIPING				
Undercoating	1			x
Wheels - Factory Aluminum Finish	1		x	
PPG Two Stage Urthane - Body Job Color	1		x	
NFPA Perimeter - 6" White Reflective Cab	1		x	
NFPA Perimeter - 6" White Reflective Body	1		x	
NFPA Chevron 6' Red/Amber Reflective - Body, Rear Door, Hose Bed Door	1			x
MISC. EQUIPMENT				
Wheel Chocks - Zico SAC-44 w/ Mounting Brackets Installed	2			x
Wiring Schematics Supplied	1		x	
Service Manual & Parts List Supplied	1		x	
WARRANTIES				
Limited Warranty (1-Year)	1		x	
Paint Warranty (7-Year)	1		x	
Electrical Warranty (10-Year)	1		x	
Body Structural Warranty (20-Year)	1		x	
Cab Paint Warranty (10 - Year)	1		x	

11 Sperti Drive, Edgewood, KY 41017
(859)331-0360
FAX: (859)331-0399

SUMMIT
Fire Apparatus and Custom Fabricators

DESCRIPTION	QTY	PRICE	STD. OPT	INCLUDED OPT.
SUMMIT 75' QUINT		$589,500.00		
Cab Structural Warranty (10 - Year/100,000 Miles)	1		x	
Engine Warranty (5 - Year/100,000 Miles)	1		x	
Transmission Warranty (5 - Year)	1		x	
SPARTAN 75 QUINT OPTIONS				
CHASSIS OPTIONS: Metro				
330 Hp Cummins ISL In Lieu Of The 450 Hp Cummins ISL		-$9,100.00		
380 Hp Cummins ISL In Lieu Of The 450 Hp Cummins ISL		-$8,300.00		
400 Hp Cummins ISL In Lieu Of The 450 Hp Cummins ISL		-$722.00		
68 Galon Fuel Tank in Lieu Of the 50 Gallon (will reduce rear compartment size)		$166.00		
100 Gallon Fuel Tank in Lieu Of the 50 Gallon (will reduce rear compartment size And Or Extend Body Length)		$594.00		
Officer Side V-Mux Vista Display		$1,838.00		
Front Wheel 17" Disc Brakes		$409.00		
Michelin Rear M&S Grip Tires In Lieu Of Highway Read		$250.00		
Aluminum Rims		$2,000.00		
Auto Tank Drains in Lieu Of Manual Drains		$121.00		
Heated Wet Tank Auto Ejector		$123.00		
Black Door Handles And No Scuff Plates		$700.00		
Electric Door Locks In Lieu of Manual		$1,102.00		
Power Windows In Lieu Of Manual Roll Up		$2,017.00		
Xtreme Duty Interior		$3,800.00		
CHASSIS OPTIONS: Gladiator				
Gladiator Cab In Lieu of Metro		$25,600.00		
500 HP Cummins ISX12 in lieu of ISL 450 HP Cummins		$33,500.00		
500 Hp Cummins ISX15 In Lieu Of The 450 Hp Cummins ISL		$37,400.00		
550 Hp Cummins ISX15 In Lieu Of The 450 Hp Cummins ISL		$40,100.00		
600 Hp Cummins ISX15 In Lieu Of The 450 Hp Cummins ISL		$44,600.00		
68 Galon Fuel Tank in Lieu Of the 50 Gallon (will reduce rear compartment size)		$166.00		
100 Gallon Fuel Tank in Lieu Of the 50 Gallon (will reduce rear compartment size And Or Extend Body Length)		$594.00		
Officer Side V-Mux Vista Display		$1,838.00		
Front Wheel 17" Disc Brakes		$409.00		
Michelin Rear Highway Tires In Lieu Of Highway Read		-$250.00		
Aluminum Rims		$2,000.00		
Auto Tank Drains in Lieu Of Manual Drains		$121.00		
Heated Wet Tank Auto Ejector		$123.00		
Chrome Door Handles With Scuff Plates		$700.00		
Electric Door Locks In Lieu of Manual		$1,102.00		

11 Sperti Drive, Edgewood, KY 41017
(859)331-0360
FAX: (859)331-0399

SUMMIT
Fire Apparatus and Custom Fabricators

DESCRIPTION	QTY	PRICE	STD. OPT	INCLUDED OPT.
SUMMIT 75' QUINT		$589,500.00		
Power Windows In Lieu Of Manual Roll Up		$2,017.00		
Xtreme Duty Interior		$3,800.00		
CHASSIS UPFIT OPTIONS:				
Front Bumper Extension 18-24" With Gravel Shield		$3,700.00		
Front Bumper Extension Hose Well (No Discharge Provided) Requires 18-24" extension)		$550.00		
Vinyl Hose Tray Cover For Bumper Hose Tray		$150.00		
Treadplate Cover For Bumper Hose Tray With Latch		$295.00		
Trailer Hitch - 2" Class 4 receiver (includes 4 way plug)		$990.00		
Seven way trailer plug in lieu of 4 way		$70.00		
Stainless Steel Wheel Simulators		$890.00		
Air Horns - Bumper Mounted (Require Bumper Extension)		$960.00		
Automatic Tire Chains - Rudd		$2,981.00		
Automatic Tire Chains - On Spot		$2,705.00		
Lighted Bumper Poles (Rookie Rods)		$325.00		
BODY OPTIONS:				
SCBA Spare Bottle Storage - One (1) On Each Side Fore of Rear Wheel W/Side Cast Aluminum Access Doors		$560.00		
SCBA Spare Bottle Storage - Two (2) On Each Side Fore And Aft Rear Wheel W/Side Cast Aluminum Access Doors		$977.00		
Dual Bottle SCBA Storage In Lieu of Single (Pending on location; Pricing is each)		$150.00		
Rub Rails with Conspicuity Stripe		$670.00		
Folding Steps on Front Of Body (Pair)		$245.00		
Protective TreadPlate Overlay On Front of Compartments		$375.00		
STORAGE OPTIONS:				
Adjustable Shelf (12" Deep)		$180.00		
Adjustable Shelf (24" Deep)		$200.00		
Adjustable Slide Tray (24" Deep, 250lb rated)		$555.00		
Roll Out / Tilt Down Tray (24" Deep)		$725.00		
Heavy Slide Tray (600 LB Rated) - Floor Mounted		$650.00		
Heavy Slide Tray (1000 LB Rated) -Floor Mounted		$680.00		
Heavy Slide Tray For Rear Cargo Area (1000 LB Rated)		$1,580.00		
Roll Out Tool Board		$750.00		
Full Height Compartment Divider (Includes Unistrut)		$480.00		
Plastic Floor Tile compartment floors		$118.00		
Plastic Floor Tile installed on 12" deep shelf / Tray (each)		$60.00		
Plastic Floor Tile compartment floors		$118.00		
Plastic Floor Tile installed on 24" deep shelf / Tray (each)		$75.00		
PUMPS & PLUMBING:				

SUMMIT
Fire Apparatus and Custom Fabricators

DESCRIPTION	QTY	PRICE	STD. OPT	INCLUDED OPT.
SUMMIT 75' QUINT		$589,500.00		
Hale Q FLow 1250 GPM Pump in Lieu of Hale Q Max1500 GPM (2 x2.5" LS, 2 x 2.5" RS, and 4" Waterway)		($3,300.00)		
Hale Q FLow 1750 GPM Pump in Lieu of Hale Q Max1500 GPM (2 x2.5" LS, 2 x 2.5" RS, LDD On RS and 4" Waterway)		$3,600.00		
Hale Q FLow 2000 GPM Pump in Lieu of Hale Q Max1500 GPM (2 x2.5" LS, 2 x 2.5" RS, LDD RS and 4" Waterway)		$3,600.00		
Waterous CSY 1250 GPM in Lieu Of The Hale Q Max 1500 GPM (2 x2.5" LS, 2 x 2.5" RS, and 4" Waterway)		$1,820.00		
Waterous CSY 1500 GPM in Lieu Of The Hale 1500 GPM		$2,290.00		
5" Front Intake (Vertical Through Bumper Extension With Air Operated Valve)		$6,820.00		
1.5" Trash Line Run to Front Bumper (Must Select Bumper Extension)		$1,100.00		
LDH Discharge on Right Side Pump Panel		$1,900.00		
Right Side 2.5"Suction		$1,325.00		
2.5" Rear Discharge - One (1) Right Hand		$2,100.00		
Hose Well In Pump House Running Board - Includes Velcro Strap		$750.00		
Foam Pro 1600 Includes Foam Cell In Tank (X-Lays Only)		$6,320.00		
Foam Pro 2001 - Single Foam System, Includes Foam Cell In Tank (X-Lays & Trash)		$7,900.00		
Foam Pro 2001 - Dual Foam System, Includes Two Foam Cells In Tank (X-Lays & Trash)		$9,800.00		
Foam Pro 2024 - Single Foam System, Includes One Foam Cell In Tank (X-Lays,Trash, One 2-1/2")		$9,720.00		
Foam Pro 2024 - Dual Foam System, Includes Two 20 Gallon Foam Cells In Tank (X-Lays,Trash, One 2-1/2")		$11,160.00		
Foam Pro Uplift System - Single		$2,350.00		
Foam Pro Uplift System - Dual		$4,580.00		
Pull Out Pump Operators Step		$575.00		
ELECTRIC:				
Kussmaul Battery Conditioner with Auto Eject In Lieu of Polarity Plug		$995.00		
Kussmaul Pump Plus, Battery Conditioner with Auto Eject In Lieu of Polarity Plug		$1,760.00		
Auto Air Eject For House Air Supply		$445.00		
Whelen 900 Series LED In Upper Zones B&D and C in lieu of Beacons		$420.00		
Single Strip LED Strip Compartment Lighting in lieu single LED		$750.00		
Dual Strip LED Strip Compartment Lighting in lieu single LED		$1,620.00		
LED Ground lights under front of body		$240.00		

11 Sperti Drive, Edgewood, KY 41017
(859)331-0360
FAX: (859)331-0399

SUMMIT
Fire Apparatus and Custom Fabricators

DESCRIPTION	QTY	PRICE	STD. OPT	INCLUDED OPT.
SUMMIT 75' QUINT		$589,500.00		
LED Ground light under front bumper		$180.00		
LED Whelen 900 Scene lighting - One (1) on Each Side of Rear Compartment (2 total)		$740.00		
LED Whelen 900 Scene lighting - Two (2) on Upper Cab Side		$880.00		
LED FRC Spectra 900 Scene lighting - One (1) on Each Side of Rear Compartment (2 total)		$1,060.00		
LED FRC Spectra 900Scene lighting - Two (2) on Upper Cab Side		$1,090.00		
Cab Brow Light - Two (2) One Each Side, Over Cab - Whelen PFA2 Pioneer 7400 Lumen, L.E.D, 12 Volt		$3,180.00		
Cab Brow Light - Two (2) One Each Side, Over Cab - Whelen PFP2 Pioneer 16000 Lumen, L.E.D, 12 Volt		$4,026.00		
Cab Brow Light - Two (2) One Each Side, Over Cab - FRC FCA800-V08 8,000 Lumen, L.E.D, 12 Volt		$2,930.00		
Cab Brow Light - Two (2) One Each Side, Over Cab - FRC FCA800-V15 15,000 Lumen, L.E.D, 12 Volt		$3,192.00		
Cab Brow Light - Two (2) One Each Side, Over Cab - FRC SPA800-Q15 15,000 Lumen, L.E.D, 12 Volt		$3,618.00		
Cab Brow Light - Two (2) One Each Side, Over Cab - FRC SPA800-Q20 20,000 Lumen, L.E.D, 12 Volt		$4,006.00		
120/240 VOLT ELECTRICAL OPTIONS				
5000 W Gasoline Powered Honda Generator - Mounted on slide tray (Elec Start)		$4,200.00		
5000 W Gasoline Powered Generator - Mounted on slide tray (Elec Start)		$2,800.00		
3000 W Baldor Diesel Generator Mounted on slide tray (Elec Start)		$4,200.00		
5500 W Baldor Diesel Generator Mounted on slide tray (Elec Start)		$5,450.00		
120/240 Volt load center with up to 4 breakers & pigtail for genertaor (Gas or Diesel Generators Only)		$750.00		
Fuel Tap from chassis (Diesel)		$610.00		
6 KW Smart Power Hydraulic Generator With Load Center		$11,828.00		
8 KW Smart Power Hydraulic Generator With Load Center		$14,923.00		
10KW Smart Power Hydraulic Generator With Load Center		$15,972.00		
15KW Smart Power Hydraulic Generator With Load Center		$20,321.00		
20KW Smart Power Hydraulic Generator With Load Center		$22,206.00		
Remote Generator Activation From Pump Panel		$250.00		
Exterior Receptacles - Covered Duplex 5-20		$285.00		
Interior 120 Volt Receptacles - Cab, Duplex 5-15		$320.00		
Interior 120 Volt Receptacles - Body Compartrment, Duplex 5-15		$250.00		

SUMMIT
Fire Apparatus and Custom Fabricators

DESCRIPTION	QTY	PRICE	STD. OPT	INCLUDED OPT.
SUMMIT 75' QUINT		$589,500.00		
220 Volt Receptacle - Body Compartment		$295.00		
Electric Cord Reel - 200' 10/3 Black Cable		$2,180.00		
Electric Cord - 200' 10/3 Yellow Cord In Lieu Of The Black		$180.00		
Electric Cord Ball Stop		$25.00		
Electric Junction Box - Akron With 4 L5-20 Receptacles		$425.00		
Electric Junction Box - Circle D With 4 L5-20 Receptacles		$545.00		
Fair Lead, Cord Reel - Hannay 4 Way		$180.00		
Sumit Extendible or Swing Out Fair Lead		$340.00		
Junction Box Mounting Bracket - Aluminum		$150.00		
Side Mount Push-Up Lights - Akron ELNB-750-Pod 120Volt, 750 Watt Lights (Per Pair)		$1,665.00		
Side Mount Push Up Lights - FRC FCA530-S75 120 Volt 750 Watt Lights (Per Pair)		$1,632.00		
Side Mount Push Up Lights - FRC FCA530-M10 1000 Watt Lights (Per Pair)		$1,745.00		
Side Mount Push Up Lights - FRC FCA530-M12 240 Volt, 1000 Watt Lights (Per Pair)		$1,832.00		
Side Mount Push Up Lights - FRC OPA530-S75 120 Volt 750 Watt Lights (Per Pair)		$1,685.00		
Side Mount Push Up Lights - FRC OPA530-M10 1000 Watt Lights (Per Pair)		$1,847.00		
Side Mount Push Up Lights - FRC OPA530-M12 240 Volt, 1000 Watt Lights (Per Pair)		$1,910.00		
Light Tower - Wil-Burt NS3.0-2700 Profiler Mounted On Cab Roof		$13,887.00		
Light Tower - Wil-Burt NS3.0-3000 Profiler Mounted On Cab Roof		$14,244.00		
Light Tower - Wil-Burt NS3.0-4500 Profiler Mounted On Cab Roof		$15,870.00		
Light Tower Fairing - Aluminum, Cab Mounted, Painted to Match		$1,780.00		
Light Tower Fairing - Treadplate Aluminum, Cab Mounted		$1,300.00		
PAINT:				
Two Tone Chassis - Custom Cab MFD		$3,550.00		
Painting Jambs in addition to paint (4 Door)		$1,200.00		
Two Tone Body		$2,550.00		
Body Undercoating		$415.00		
Painted Steel Wheels to Job Color		$460.00		
STRIPING & LETTERING:				
NFPA Perimeter Stripe 4"		$642.00		
1- 4 -1 NFPA Perimeter Stripe 4" with 1" stripe above and below		$792.00		

Fire Apparatus and Custom Fabricators

DESCRIPTION	QTY	PRICE	STD. OPT	INCLUDED OPT.
SUMMIT 75' QUINT		$589,500.00		
Z pattern in stripe		$130.00		
Sixty (60) 3" Reflective Lettering		$705.00		

11 Sperti Drive, Edgewood, KY 41017
(859)331-0360
FAX: (859)331-0399

Fire Apparatus and Custom Fabricators

DESCRIPTION	QTY	PRICE	STD. OPT	INCLUDED OPT.
SUMMIT 103' QUINT		$706,300.00		
CHASSIS				
Metro Star				
Summit Fire (SUM1001)	1			
Model Year - 2015				
Country of Service United States Of America				
Apparatus Type Rear Mount Quint				
Rear Mount Aerial Device Series 103 MUX				
Vehicle Type Straight Truck				
Axle Configuration 6x4 (Rear Tandem Axle Drive Only)				
GAWR Front 21500#				
GAWR Rear 44000#				
Pump Provision Driveline Midship				
Cab Style MFD 10" Raised Roof				
Occupant Protection Advanced Protection System				
Cab Frt Fascia Classic				
Cab Frt Grille Hinged Classic Styled				
Cab Undercoat				
Cab Side Drip Rail				
Cab Paint Exterior Single Color				
Cab Paint Manufacturer PPG				
Cab Paint Primary/Lower Color No Selection/TBD				
Cab Paint Warranty 2015 (10) Year/100,000 Miles				
Cab Paint Int Zolatone Silver Gray				
Cab Entry Doors (4)				
Cab Entry Door Type Full Length				
Cab Insulation				
Cab Roof Trench 50"W x 10"D				
Cab Structural Warranty 2015 (10) Year/100,000 Miles				
Cab Test Information Crash Test ECE-R29/SAE J2420/SAE J2422				
Elec System 12V DC MUX				
MUX Display Weldon Touchscreen IV LH Sw Pnl				
Data Recording Sys Vehicle Data Weldon MUX				
Accessory Pwr & Gnd Stud 40A Batt Dir & 15A Ign Sw				
Aux Acc Pwr & Gnd Stud Bhd Sw Pnl 40A Mstr Sw				
Addl Acc Pwr 10 Fuse Pnl Bhd Off Seat w/40A Fuse Batt Dir				
Exterior Electrical Terminal Coating Spray On Plasti Dip				
Engine Diesel 450HP Cummins ISL9 - EPA 2013				
Cab Engine Tunnel Small/Medium				
DPF Ctrl Regeneration Sw & Inhibit Sw				
Engine Programming High Idle Speed 1250 RPM				
Engine High Idle Ctrl Manual and Automatic w/V-MUX				
Engine Programming Road Speed Governor Enabled				
Aux Engine Brake Compression Brake w/VG Turbo				

11 Sperti Drive, Edgewood, KY 41017
(859)331-0360
FAX: (859)331-0399

Fire Apparatus and Custom Fabricators

DESCRIPTION	QTY	PRICE	STD. OPT	INCLUDED OPT.
SUMMIT 103' QUINT		$706,300.00		
Aux Engine Brake Ctrl Off/Low/Med/High MUX				
Elec Engine Oil Level Indicator				
Fluid Fills Fwd For Med Displacement Cap				
Engine Drain Plug				
Engine Warranty Cummins (5) Year/100,000 Miles				
Engine Program Rmt Throttle On				
Engine Programming Idle Speed 700 RPM				
Engine Fan Drive Direct				
Engine Cooling Sys Serial Flow Medium				
Engine Cooling System Protection Light Duty Skid Plate				
Engine Coolant Extended Life				
Elec Low Coolant Level Indicator				
Engine Pump Heat Exchanger				
Coolant Hoses Silicone Heater & Radiator w/Cab Int Rubber Hoses				
Engine Air Intake Filtration and Restriction w/Replaceable Element				
Air Intake Protection Light Duty Skid Plate				
Eng Exhaust Sys Under Frm RH Outboard w/DPF/SCR Inline				
Diesel Exhaust Fluid Tank LH 6 Gal Fill Thru Rr Step				
Engine Exh Acc Exh Temp Mitigation				
Engine Exhaust Wrap				
Transmission Allison 3000 EVS				
Transmission Mode Programming 5th Startup/6th Mode				
Transmission Feature Programming Allison Gen V-E I/O Package 198/Pumper				
Transmission GEN V-E Shift Sel Key Pad/Push Button				
Elec Transmission Oil Level Indicator				
2nd Gear Pre-Select				
Transmission Cooling System				
Transmission Drain Plug				
Transmission Warranty Allison (5) Year				
LH PTO Spartan Sply				
LH PTO Model Chelsea 278-XSFJP-B3RA				
PTO Location 8:00/4:00				
PTO Ctrl LH Aerial PTO Prog Vista Actv Labeled Aerial On/Off/Active w/Neutral				
Driveline Spicer 1710/1610 HD				
Midship Pump Jackshaft Only				
Midship Pump/Gearbox Model Hale QMAX				
Midship Pump Gearbox Drop Hale "S"				
Midship Pump Ratio 2.28:1 (23)				
Midship Pump Location C/L Suction to C/L Rear Axle 110.0"				
Fuel Filter/Wtr Separator Fleetguard FS1003 w/Lt & Alarm				

Fire Apparatus and Custom Fabricators

DESCRIPTION	QTY	PRICE	STD. OPT	INCLUDED OPT.
SUMMIT 103' QUINT		$706,300.00		
Fuel Lines Nylon				
Electric Fuel Primer Engine Sply Electric Lift Pump				
Fuel Tank 50 Gallon				
Fuel Tank Fill Port LH Rwd/RH Mid				
Frt Axle Meritor MFS 21500# Beam				
Front Axle Warranty Meritor 2015				
Frt Wheel Bearing Lube Oil				
Frt Shock Absorbers Bilstein				
Frt Suspension 9 Leaf 20000-21500#				
Steering Column/Wheel Tilt/Telescopic 18" 4 Spoke				
Elec Power Steering Fluid Level Indicator				
Power Steering Pump TRW				
Front Axle Cramp Angle 48L/44R Degrees				
Power Steering Gear TRW TAS 65 w/Assist				
Chassis Alignment				
Rear Axle 44000# Meritor MT-44-14X				
Rear Axle Warranty Meritor 2015				
Rear Axle Differential Lubrication Oil				
Rear Wheel Bearing Lubrication Oil				
Rear Axle Differential Ctrl Interaxle Lock				
Vehicle Top Speed 65 MPH				
Rear Susp Ridewell RD-202 Rubber 40000-48000#				
Rear Shock Absorbers Suspension Sply				
Frt Tire 425/65R 22.5 Michelin XZY3				
Rear Tire 315/80R 22.5 Michelin XZA1				
Rear Axle Ratio 6.14				
Tire Pressure Ind Frt Only RealWheels Tire Watch LED Voucher				
Frt Wheel Accuride 22.5 x 12.25 Steel				
Rr Whl Accuride 22.5 x 9.00 Steel				
Wheel Paint Primary/Lower Cab Color				
Brake System ABS/ATC/ESC Tandem Axle MUX Btn				
Frt Brakes S-Cam Drum 16.5" x 6"				
Rr Brakes S-Cam Drum 16.5" x 7"				
Prk Brake Rr Wheels Only				
Prk Brake Ctrl Ctr Tunnel Mnt				
Frt Brake Slack Adjusters Meritor				
Rr Brake Slack Adjusters Meritor				
Air Dryer Wabco System Saver 1200 Bhd LH Batt Box				
Frt Brake Chambers MGM Type 30				
Rr Brake Chambers TSE 30/30				
Air Compressor Wabco SS318 18.7 CFM				
Air Governor Mnt on Air Dryer Bracket				
Moisture Ejectors Manual/Auto Wet Tank				

11 Sperti Drive, Edgewood, KY 41017
(859)331-0360
FAX: (859)331-0399

Fire Apparatus and Custom Fabricators

DESCRIPTION	QTY	PRICE	STD. OPT	INCLUDED OPT.
SUMMIT 103' QUINT		$706,300.00		
Air Sply Lines Nylon				
Rear Air Tank Mnt Any Bhd Rear Axle Perpendicular w/Frame				
Wheelbase 237.5"				
Rear Overhang 100.0"				
Frame Double Channel 35.00" Width				
Frame Warranty Lifetime 2015				
Frame Paint Powder Coat Black				
Frt Bumper Stainless Steel Flat				
Frt Bumper Extension Length 24"				
Frt Bumper Extension Frame Width 48.25"				
Air Horn 24" Round Hadley E-Tone				
Air Horn Location Frt Bmpr Face LH IB				
Air Horn Reservoir (1) 1200 Cu In				
Frt Bumper Tow Hooks Painted Side Rwd				
Cab Tilt System				
Cab Tilt Ctrl Receptacle Temp				
Cab Windshield				
Glass Frt Dr Roll Down/XDuty Regulator				
Glass Tint Frt Dr Automotive Green				
Glass Rr Dr RH Roll Down/XDuty Regulator				
Glass Tint Rr Door RH Automotive Green				
Glass Rr Dr LH Roll Down/XDuty Regulator				
Glass Tint Rr Door LH Automotive Green				
Glass Side Mid RH Fxd 16"W x 26"H				
Glass Tint Side Mid RH Automotive Green				
Glass Side Mid LH Fxd 16"W x 26"H				
Glass Tint Side Mid LH Automotive Green				
Climate Ctrl Htr Defroster Frt Ovrhd/Htr A/C Tunnel Mnt				
Climate Control Drain Gravity				
Climate Ctrl Actv Device Mnt Ovrhd/Device Mnt Tunnel				
A/C Condenser Location Roof Mnt Mid LH				
A/C Compressor Large Capacity				
Under Cab Insulation Engine Tunnel				
Interior Trim Floor				
Interior Trim Vinyl				
Rear Wall Interior Trim Vinyl				
Header Trim ABS				
Trim Center Dash ABS				
Trim LH Dash ABS				
Trim RH Dash ABS Glove Cmpt/MDT Prov				
Eng Tnl Trim Flr Mat				
Step Trim Grip Strut Lwr Flex-Tred Mid				
Under Cab Access Door Rear Step LH Painted				
Interior Door Trim Painted				

SUMMIT
Fire Apparatus and Custom Fabricators

DESCRIPTION	QTY	PRICE	STD. OPT	INCLUDED OPT.
SUMMIT 103' QUINT		$706,300.00		
Door Trim Customer Nameplate				
Cab Dr Trim Reflective Vert Stripe/6" Chevron w/Logo				
Interior Grab Handle 'A' Pillar 11" Molded				
Interior Grab Handle Frt Door Horiz 9"				
Int Grab Handle Rr Dr Alum Window Span 30" Black Powder Coat				
Interior Trim Vinyl Color Gray				
Interior Trim Sunvisor Vinyl				
Interior ABS Trim Color Gray				
Interior Floor Mat Color Gray				
Cab Paint Int Dr Trim Zolatone Silver Gray				
Dash Pnl Group 3-Pnl				
Switches Ctr Pnl 6 Upr LH				
Switches Left Pnl 1 Wiper				
Switches Right Pnl 3 Far RH Ctr				
Seat Belt Warn Vista Display w/VDR				
Seat Material Ballistic				
Seat Color Gray/Red Seat Belts				
Seat Back Logo Spartan Chassis				
Seat Driver Bostrom Firefighter 4-Way Air Non-ABTS				
Seat Back Driver Non-SCBA Non-ABTS				
Seat Mounting Driver				
Occupant Protection Driver Advanced Protection System				
Seat Officer Bostrom Firefighter 2-Way Manual ABTS				
Seat Back Officer Non-SCBA ABTS				
Seat Mounting Officer				
Occupant Protection Officer Advanced Protection System				
Seat Belt Orientation Crew Outboard Shoulder To Inboard Hip				
Seat RFO Location (2) R/L				
Seat Crew RFO Bostrom Firefighter Fixed				
Seat Back RFO SCBA Bostrom SecureAll w/Quick-Adjust				
Seat Mounting Rear Facing Outer				
Occupant Protection RFO Advanced Protection System				
Seat FFC Location (2) Ctr				
Seat Crew FFC Bostrom Firefighter Flip-Up				
Seat Back FFC SCBA Bostrom SecureAll w/Quick-Adjust				
Occupant Protection FFC Advanced Protection System				
Seat Frm Fwd Fcg Dual				
Seat Frm Fwd Fcg Strg Acc Dr (2) R/L Sd				
Seat Mounting Forward Facing Center				
Cab Frt Undrst Strg Acc Dr				
Seat Compartment Door Finish Zolatone Silver Gray				
Windshield Wiper System Single Motor				
Electronic Windshield Fluid Level Indicator				

11 Sperti Drive, Edgewood, KY 41017
(859)331-0360
FAX: (859)331-0399

Fire Apparatus and Custom Fabricators

DESCRIPTION	QTY	PRICE	STD. OPT	INCLUDED OPT.
SUMMIT 103' QUINT		$706,300.00		
Cab Door Hardware Black				
Door Locks Manual				
Grab Handles SS 18"				
Mirror Aerodynamic Retrac 613265 Rmt				
Cab Fender Alum Wide				
Cab Ext Frt & Side Emblems w/Side Emblem Integrated Model Nameplate				
Cab Exterior Model Nameplate Metro Star Advanced Protection System w/Emblem				
Ign Mstr Sw w/Keyless Start				
Batt (6) Group 31 Harris				
Batt Tray (2) R/L Steel				
Batt Box Cover (2) Steel w/Black Handles				
Batt Cables				
Batt Jumper Stud Frt LH Lwr Step				
Alternator Leece-Neville 270A				
Headlights 4 Headlamps Halogen				
Frt Turn Signals Whelen 600 Series Halogen				
Headlights Below Frt Warn Lts				
Side Turn/Marker Lts LED				
Marker & ICC Lts Face Mnt LED				
Hdlt & Mrkr Lt Actv MUX/DRL				
Ground Lts Resp Side Dr & Vista				
Step Lts LED				
Engine Cmpt Work Lt (1)				
Interior Overhead Lts Weldon w/Front Map Lts/MUX Actv				
Do Not Move App Lt Flashing Red w/Alarm				
Mstr Warn Sw MUX				
Headlight Flasher Alternating				
Headlight Flasher Sw MUX				
Inboard Frt Warn Lts Whelen 600 Super LED Chrm Bezel				
Inboard Frt Warn Lts Color Red				
Frt Warn Sw Vista				
Horn Btn Sel Sw Elec Horn/Air Horn MUX				
Air Horn Actv Strg Whl/RH Ft Sw				
Back-Up Alarm Ecco 575				
Instrumentation Standard				
Backlighting Color Red				
Hour Meter Honeywell in Instrument Pnl for LH PTO				
Panel Layout				
Aerial Device 103' Rear Mount Steel Telescoping Turntable Ladder				
Aerial Device Waterway System Series 103 w/Rr Inlet/Rr E-Discharge				

11 Sperti Drive, Edgewood, KY 41017
(859)331-0360
FAX: (859)331-0399

Fire Apparatus and Custom Fabricators

DESCRIPTION	QTY	PRICE	STD. OPT	INCLUDED OPT.
SUMMIT 103' QUINT		$706,300.00		
Aerial Device Waterway Flow Meter Class 1 Flow Minder				
Aerial Electric Monitor Akron 3578 Auto Stow				
Aerial Electric Nozzle Akron Akromatic 1250 Master Stream				
Front Aerial Device Outriggers H-Style 14' Stance				
Rear Aerial Device Outriggers H-Style 14' Stance				
Aerial Device Aux Outrigger Pads Dual Sets Alum				
Aerial Device Outrigger Ground Lights (4) LED				
Aerial Device Outrigger Warn Lights (8) LED Red 3"H x 5"W				
Aerial Device Emergency Hydraulic Ladder Pump 12V				
Aerial Device Turntable Side Hosebed Access				
Turntable Deck Access Sgl Handrail Opening w/Safety Chain				
Turntable Ctrl Station Rear Mnt Aerial Ladder Drv Sd				
Turntable Work Lights (5) Halogen in Turntable Step Cvr				
Aerial Ladder Fly Tip Step (1) Folding Step				
Aerial Device Spot Light Unity Single Spot Ladder Tip				
Aerial Device Tracking Spot Light (2) Unity Spot				
Aerial Device AC Electrical Power (2) Cable OEM Conn at Ladder Rotation Swivel				
Apparatus Level Indicator (2), (1) Side-to-Side and (1) Fore/Aft Shiploose				
Aerial Comm System Atkinson Two position Intercom				
Aerial Device Paint PPG White FBCH 2185				
Aerial Device Lift Cylinder Paint PPG White FBCH 2185				
Aerial Device Travel Rest Paint PPG Black FBCH 9000				
Aerial Outrigger Paint PPG Silver Mtlc FBCH 33723				
Aerial Torque Box/Turntable/Control Station Paint PPG Black FBCH 9000				
Aerial Extension/Retraction Cylinder Paint PPG Black FBCH 9000				
Aerial Device Tip Paint PPG White FBCH 2185				
Aerial Device Operation Manuals (2) Hard Copy w/(2) Digital Parts Manuals				
Aerial Device As Built Wiring Diagram Digital Copy (2)				
Aerial Device As Built Hydraulic Diagram Digital Copy (2)				
Aerial Device Warranty 2015 Ladder w/Waterway General Coverage				
Aerial Device Training (3) Days				
Cab Exterior Protection Front				
Fire Extinguisher Ship Loose				
Door Keys for Manual Locks (4)				
Diagnostic Software Occupant Protection Advanced Protection System				
Warranty Cab and Chassis 2015 (2) Year				
Cab and Chassis Labeling Language English				

11 Sperti Drive, Edgewood, KY 41017
(859)331-0360
FAX: (859)331-0399

Fire Apparatus and Custom Fabricators

DESCRIPTION	QTY	PRICE	STD. OPT	INCLUDED OPT.
SUMMIT 103' QUINT		$706,300.00		
Chassis Operation Manual Digital Copy (2)				
Eng & Trans Operation Man Eng Hard Copy/Trans Digital/Eng Owner Digital				
Cab/Chassis As Built Wiring Diagrams Digital Copy (2)				
Sales Terms				
End of Frame Cross Member				
End of Frame Cross Member				
CHASSIS MODIFICATIONS				
Front Bumper Extenion - Factory Extension	1		x	
Front Bumper Extension Storage - Delete	1		x	
Front Bumper Extension Gravel Shield - Aluminum Treadplate	1			x
Tire Chains - Delete	1		x	
Rear Tow Eyes - Painted Under Rear Tailboard	2		x	
Tire Pressure Monitoring System - Valve Stem Low Pressure Indicators	1		x	
Wheels - Unfinished	1		x	
Front Mud Flaps	1		x	
Rear Mud Flaps	1		x	
Fluid Identifcation Plate	1		x	
Fuel Type Label - Diesel	1		x	
Seating Label - Maximum Seating Of 2	1		x	
Vehicle Height Label	1		x	
Seatbelt Warning Label	1		x	
Riding On Step Warning Label - Rear of Body	1		x	
Helmet In Cab Warning Label	1		x	
NFPA Helmet Storage - Department To Mount In Body	1		x	
BODY - Aerial				
Body Construction - Combination Formed Sheet / Extruded	1		x	
Body Subframe - Aluminum Extruded	1		x	
Material - .160" and .190" 5052 Aluminum	1		x	
Body Mounting	1		x	
Polymer Isolation Strips - Chassis Frame	1		x	
Construction - All Aluminum	1		x	
Body Dimensions - 16' Long, 90" High, 100" Wide	1		x	
Compartment Interiors - Unfinished Aluminum	1		x	
Compartment Floors - Raised Sweep-out Type	1		x	
Fenderettes - Polised Stainless Steel	2		x	
Wheel Well Liners - Full Removable Poly Liners	2		x	
Corrosion Protection Pkg - Anti Corrosion Compound and Nylon Spacers on All Fasteners	1		x	
Fuel Fill Pocket - Cast Aluminum Houseing w/ Door	1			x
Right Side Hose Bed Storage - Aluminum Extruded Floor	1		x	

11 Sperti Drive, Edgewood, KY 41017
(859)331-0360
FAX: (859)331-0399

SUMMIT
Fire Apparatus and Custom Fabricators

DESCRIPTION	QTY	PRICE	STD. OPT	INCLUDED OPT.
SUMMIT 103' QUINT		$706,300.00		
Rear Access Ladder & Pike Pole Storage Compartment - Below Turn table	1		x	
Turntable Access Steps, Access landing	1		x	
COMPARTMENTATION - 7-Bay				
L1 Compartment Dimensions - 60" Wide x 70" High x 14" Deep Upper, 25.95" Deep Lower	1		x	
L1 Adjustable Shelf Hard ware - P100 Aluminum Unistrut	1		x	
L2 Compartment Dimensions - 23" Wide x 38" High x 14" Deep	1		x	
L2 Adjustable Shelf Hard ware - P100 Aluminum Unistrut	4			x
L3 Compartment Dimensions - 55" Wide x 28" High x 14" Deep	1		x	
L3 Adjustable Shelf Hard ware - P100 Aluminum Unistrut	4			x
L4 Compartment Dimensions - 19" Wide x 62" High x 14" Deep upper, 25.95" Deep Lower	1		x	
L4 Adjustable Shelf Hard ware - P100 Aluminum Unistrut	4			x
R1 Compartment Dimensions - 60" Wide x 70" High x 14" Deep Upper, 25.95" Deep Lower			x	
R1 Adjustable Shelf Hard ware -Delete (Pump Compartment)				x
R2 Compartment Dimensions - 42" Wide x 28" High x 25.95" Deep	1		x	
R2 Adjustable Shelf Hard ware - P100 Aluminum Unistrut	4			x
Rear Ladder Compartment Dimensions - 36" Wide x 36" High	1			
Compartment Doors - ROM Roll Up Doors	7			x
Door Finish - Anodized	1		x	
Top Seal - Drip Rail With Wiper	7		x	
Internal Drip Pans - Delete	1		x	
Door Locks - Delete	1		x	
BODY UPFIT:				
Turn Table Access - Zico Quic-Ladder	1			x
Roof Access Ladder Deployment Warning - Activate Compartment Ajar Light When Deployed	1			x
Grab Rail - Apparatus Rear	1			x
Right Side Rear Hose Bed	1		x	
Hose Bed Dividers - 1	1		x	
Hose Bed Cover - Vinyl Tarp Cover with buckles	1		x	
Chrome Rear Stanchions For Beacons	2		x	
PUMP	1		x	
Pump - Hale 1500 GPM	1		x	
Gearbox - In Cab Pneumatic Shift	1		x	
Pump Shift Overide - Driverside Pump Panel	1			x

11 Sperti Drive, Edgewood, KY 41017
(859)331-0360
FAX: (859)331-0399

Fire Apparatus and Custom Fabricators

DESCRIPTION	QTY	PRICE	STD. OPT	INCLUDED OPT.
SUMMIT 103' QUINT		$706,300.00		
Pump Seals - Mechanical	1		x	
Priming Pump - Oiless	1			x
Auxillary Cooler / Heat Exchanger - Pump/Engine Circulator	1		x	
Intake Relief Valve - Pressure Relief Valve	6		x	
Master Drain - Drivers Side Lower Pump Panel	1		x	
Drains - Quarter Turn Valves Drivers Side Pump Panel	1		x	
Thermal Relief Valve - Delete	1			x
Cooling Line - Delete	1			x
Plumbing - Stainless Steel & High Pressure Hose	1		x	
Valves - Hale Stainless Series Quarter Turn	1		x	
Pump Anode - One	1			x
Pump Test - Manufacturer Class A NFPA 1901	1		x	
Suction Releif - Terminate Below Pump House Away From Work Area	1			x
Steamer Inlets - 6"	1		x	
6" Gated Inlets - Delete	2		x	
MIV Contol - Delete	2		x	
MIV Contol Location - Delete	1		x	
Steamer Caps - 6" Long Handle Chrome	1		x	
Left Side Auxillary Intake - (1) 2.5" Aux Intake	1		x	
Left Side Auxillary Intake Control - Lever	1			x
Left Side Auxillary Intake Termination - Chrome Plug and Chain	1		x	
Right Side Auxillary Intake - (1) 2.5" Aux Intake	1		x	
Right Side Auxillary Intake Control - Electric	1		x	
Right Side Auxillary Intake Termination -Chrome Cap with Chain	1		x	
Pump Module - 72" Width Self-Supported Structure Independent of Body	1			x
Pump Module To Body Flex Joint	1		x	
Pump Module - Traditional Side Mount	1			x
Pump Module Construction - Aluminum Extruded	1		x	
Pump Control Panel - Side Mount Control	1		x	
Dunnage Storage Area - Delete	1			x
Grab Handles - Two (2) Mounted to Module, One On Each Side	2		x	
Pump Panel Construction - Stainless Steel	1			x
Valve Controls - Class One Locking Push Pull	8			x
Pressure Gauges - 2.5" Class One Line Gauges	2		x	
Master Gauges - 3.5"	1		x	
Pressure Governor - Class 1 TPG Plus	1			x
Auxiliary Fuel Guage - Delete	1			x
Water Level Gauge - Class One 1 ITL	1		x	
U.L. Test Ports	1		x	

Fire Apparatus and Custom Fabricators

DESCRIPTION	QTY	PRICE	STD. OPT	INCLUDED OPT.
SUMMIT 103' QUINT		$706,300.00		
Data Plate - Driver Side Pump Panel	1		x	
Labels - All Intakes, Discharges, Drains & Gauges NFPA Labeled & Color Coded	1		x	
Tank To Pump Valve - 3" 1/4 Turn Ball Valve	1		x	
Tank Fill Valve - 1.5" 1/4 Turn Ball Valve	2		x	
Left Side Discharges - Two (2) 2.5"	2		x	
Left Side Discharge Control - Class 1 Locking Push / Pull	2		x	
Left Side Discharge Termination - 2.5" Chrome Cap With Chain	2		x	
Right Side Forward Discharge -Two (2) 2.5"	2		x	
Right Side Forward Discharge Control - Class 1 Locking Push / Pull	2		x	
Right Side Forward Discharge Termination - 2.5" Chrome Cap With Chain	2		x	
Right Side Rearward Discharge - One (1) 2.5"	1		x	
Right Side Rearward Discharge Control - Class 1 Locking Push / Pull	1		x	
Right Side Rearward Discharge Termination - Chrome Cap and Chain	1		x	
Large Diameter Discharge - One (1) Akron 4" Electric	1		x	
Large Diameter Discharge Control - Electric	1		x	
Large Diameter Discharge Termination - Aerial Waterway	1			x
1.75" Crosslays Above of Pump Module - (2) 1.75"	2		x	
Crosslay Controls - Class 1 Locking Push / Pull	2		x	
2.5 " Crosslays Above Pump Module - Delete	1		x	
Crosslay 2.5" Controls - Delete	1		x	
Front Bumper Trashline/Jumpline - Delete	1		x	
Front Bumper Trashline Discharge Control - Delete	1		x	
Front Bumper Discharge Termination - Delete	1		x	
Pump Compartment Light - (1) Vista Strip LED Across Top (In Adddition To Door Lights)	1		x	
Foam System - Delete	1		x	
Foam Control - Delete	1		x	
Foam Flush Control - Delete	1		x	
Foam Strainer Clean Out - Delete	1		x	
Foam Selector - Delete	1		x	
Foam Check Valves - Delete	1		x	
Flow Meter(s) - Delete	1		x	
Low Tank Level Switch - Delete	1		x	
Foam Up Load System - Delete	1		x	
Pull Out Pump Operators Platform - Delete	1		x	
TANK	1		x	
Booster Tank - UPF Poly 500	1		x	
ISO Certification - 9001:2008	1		x	

SUMMIT
Fire Apparatus and Custom Fabricators

DESCRIPTION	QTY	PRICE	STD. OPT	INCLUDED OPT.
SUMMIT 103' QUINT		$706,300.00		
Construction - Pt3 Polypropylene	1		x	
Closed Curve Baffling	1		x	
Fill Tower W/Cover - Center Mount	1		x	
Vent Overflow - 4 Inch	1		x	
Sump	1		x	
3" Npt Threaded Outlet Bottom Of Sump	1		x	
Foam Cell - Delete	1		x	
Foam Drain - Delete	1		x	
12 VOLT ELECTRICAL REQUIRMENTS				
12 Volt Elctrical System - Multiplex System	1		x	
Wiring Requirments - NFPA 1901	1		x	
SAE Practices & FMVSS Compliant	1		x	
Wiring - GXL Stranded Copper	1		x	
12V Dc Voltage Output Testing & Documentation	1		x	
Switch Panel - Cab mounted - One Master Switch Warning System	1		x	
Reserve Capacity Test:	1		x	
Alternator Performance Test At Idle:	1		x	
Alternator Performance Test At Full Load:	1		x	
Low Voltage Alarm Test:	1		x	
Documentation - NFPA Test Results	1		x	
Battery Disconnect Switch - Supplied Chassis Manufacturer	1		x	
Battery Light - Green L.E.D. Dash Mounted	1		x	
Clearance / Marker Lights - Tecniq P2 L.E.D	21		x	
License Plate Bracket and Light - Arrow	1		x	
Brake Lights, - Whelen 600 Series Red L.E.D.	2		x	
Turn Lights - Whelen 600 Series Amber L.E.D.	2		x	
Backup Lights - Whelen 600 Series Clear L.E.D.	2		x	
Light Cluster Housing - Chrome	2		x	
Light Bar - Delete	1		x	
Blocking Right Away	1		x	
Whelen Mini NFPA Ultra Freedom Bars - On Cab Raised Roof	2			x
Lower Zone A Warning Lights - Whelen 600 Series L.E.D. Supplied Chassis Mfg	2		x	
Lower Zone B&D Intersection Lights - Whelen 600 Series L.E.D Front Bumper Tail	2		x	
Lower Zone B&D Intersection Light Chrome Flange - Whelen 6E flange	2		x	
Lower Zone B&D Midship Warning Lights - Whelen 600 Series On Cab Above Wheel Well	2		x	
Lower Zone B&D Midship Warning Light Chrome Flange - Whelen 6Eflange	2		x	

Fire Apparatus and Custom Fabricators

DESCRIPTION	QTY	PRICE	STD. OPT	INCLUDED OPT.
SUMMIT 103' QUINT		$706,300.00		
Lower Zone B&D Midship Warning Lights - Whelen 600 Series Rear Wheel Well	2		x	
Lower Zone B&D Midship Warning Light Chrome Flange - Whelen 6Eflange	2		x	
Lower Zone B,D, & C Rear & Side Warning Light - Power Arc PA180 LED	2			
Upper Zone C Warning Lights - L31HAFN Drivers Side & L31HRFN LED Beacon	2			x
Electric Siren - Whelen WS-295	1		x	
Speaker - (1) CPI SH2015 Flush Mount	2		x	
Mechanical Siren - Delete	1			x
Compartment Lighting - TecNiq, Single Light Strip Each Door	18			x
Compartment Open Light - Red	1		x	
Hose Bed Light - Single Spot Light	1		x	
Ground Lighting Cab - Supplied by Chasis Manufacturer	1		x	
Ground Lighting Body - 8 TecNiq LED	1		x	
Battery Conditioner - Kussmaul Auto-Charge Super Kit w/ Auto-Eject	1			x
Battery Charging Receptacle - Kussmaul Auto Eject	1			x
Battery Charge Indicator - Delete	1		x	
Rear Mounted Camera - Mito Installed on Rear of Body	1			x
PAINTING / STRIPING				
Undercoating	1			x
Wheels - Factory Aluminum Finish	1		x	
PPG Two Stage Urthane - Body Job Color	1		x	
NFPA Perimeter - 6" White Reflective Cab	1		x	
NFPA Perimeter - 6" White Reflective Body	1		x	
NFPA Chevron 6' Red/Amber Reflective - Body, Rear Door, Hose Bed Door	1			x
MISC. EQUIPMENT				
Wheel Chocks - Zico SAC-44 w/ Mounting Brackets Installed	2			x
Wiring Schematics Supplied	1		x	
Service Manual & Parts List Supplied	1		x	
WARRANTIES				
Limited Warranty (1-Year)	1		x	
Paint Warranty (7-Year)	1		x	
Electrical Warranty (10-Year)	1		x	
Body Structural Warranty (20-Year)	1		x	
Cab Paint Warranty (10 - Year)	1		x	
Cab Structural Warranty (10 - Year/100,000 Miles)	1		x	
Engine Warranty (5 - Year/100,000 Miles)	1		x	

11 Sperti Drive, Edgewood, KY 41017
(859)331-0360
FAX: (859)331-0399

SUMMIT
Fire Apparatus and Custom Fabricators

DESCRIPTION	QTY	PRICE	STD. OPT	INCLUDED OPT.
SUMMIT 103' QUINT		$706,300.00		
Transmission Warranty (5 - Year)	1		x	
SPARTAN 103' QUINT OPTIONS				
CHASSIS OPTIONS: Metro				
330 Hp Cummins ISL In Lieu Of The 450 Hp Cummins ISL		-$9,100.00		
380 Hp Cummins ISL In Lieu Of The 450 Hp Cummins ISL		-$8,300.00		
400 Hp Cummins ISL In Lieu Of The 450 Hp Cummins ISL		-$722.00		
68 Gallon Fuel Tank in Lieu Of the 50 Gallon (will reduce rear compartment size)		$166.00		
100 Gallon Fuel Tank in Lieu Of the 50 Gallon (will reduce rear compartment size And Or Extend Body Length)		$594.00		
Officer Side V-Mux Vista Display		$1,838.00		
Front Wheel 17" Disc Brakes		$409.00		
Michelin Rear M&S Grip Tires In Lieu Of Highway Read		$250.00		
Aluminum Rims		$2,000.00		
Auto Tank Drains in Lieu Of Manual Drains		$121.00		
Heated Wet Tank Auto Ejector		$123.00		
Black Door Handles And No Scuff Plates		$700.00		
Electric Door Locks In Lieu of Manual		$1,102.00		
Power Windows In Lieu Of Manual Roll Up		$2,017.00		
Xtreme Duty Interior		$3,800.00		
CHASSIS OPTIONS: Gladiator				
Gladiator Cab In Lieu of Metro		$25,600.00		
500 HP Cummins ISX12 in lieu of ISL 450 HP Cummins		$33,500.00		
500 Hp Cummins ISX15 In Lieu Of The 450 Hp Cummins ISL		$37,400.00		
550 Hp Cummins ISX15 In Lieu Of The 450 Hp Cummins ISL		$40,100.00		
600 Hp Cummins ISX15 In Lieu Of The 450 Hp Cummins ISL		$44,600.00		
68 Galon Fuel Tank in Lieu Of the 50 Gallon (will reduce rear compartment size)		$166.00		
100 Gallon Fuel Tank in Lieu Of the 50 Gallon (will reduce rear compartment size And Or Extend Body Length)		$594.00		
Officer Side V-Mux Vista Display		$1,838.00		
Front Wheel 17" Disc Brakes		$409.00		
Michelin Rear Highway Tires In Lieu Of Highway Read		-$250.00		
Aluminum Rims		$2,000.00		
Auto Tank Drains in Lieu Of Manual Drains		$121.00		
Heated Wet Tank Auto Ejector		$123.00		
Chrome Door Handles With Scuff Plates		$700.00		
Electric Door Locks In Lieu of Manual		$1,102.00		
Power Windows In Lieu Of Manual Roll Up		$2,017.00		
Xtreme Duty Interior		$3,800.00		

11 Sperti Drive, Edgewood, KY 41017
(859)331-0360
FAX: (859)331-0399

SUMMIT
Fire Apparatus and Custom Fabricators

DESCRIPTION	QTY	PRICE	STD. OPT	INCLUDED OPT.
SUMMIT 103' QUINT		$706,300.00		
CHASSIS UPFIT OPTIONS:				
Front Bumper Extension 18-24" With Gravel Shield		$3,700.00		
Front Bumper Extension Hose Well (No Discharge Provided) Requires 18-24" extension)		$550.00		
Vinyl Hose Tray Cover For Bumper Hose Tray		$150.00		
Treadplate Cover For Bumper Hose Tray With Latch		$295.00		
Trailer Hitch - 2" Class 4 receiver (includes 4 way plug)		$990.00		
Seven way trailer plug in lieu of 4 way		$70.00		
Stainless Steel Wheel Simulators		$890.00		
Air Horns - Bumper Mounted (Require Bumper Extension)		$960.00		
Automatic Tire Chains - Rudd		$2,981.00		
Automatic Tire Chains - On Spot		$2,705.00		
Lighted Bumper Poles (Rookie Rods)		$325.00		
BODY OPTIONS:				
SCBA Spare Bottle Storage - One (1) On Each Side Fore of Rear Wheel W/Side Cast Aluminum Access Doors		$560.00		
SCBA Spare Bottle Storage - Two (2) On Each Side Fore And Aft Rear Wheel W/Side Cast Aluminum Access Doors		$977.00		
Dual Bottle SCBA Storage In Lieu of Single (Pending on location; Pricing is each)		$150.00		
Rub Rails with Conspicuity Stripe		$670.00		
Folding Steps on Front Of Body (Pair)		$245.00		
Protective TreadPlate Overlay On Front of Compartments		$375.00		
STORAGE OPTIONS:				
Adjustable Shelf (12" Deep)		$180.00		
Adjustable Shelf (24" Deep)		$200.00		
Adjustable Slide Tray (24" Deep, 250lb rated)		$555.00		
Roll Out / Tilt Down Tray (24" Deep)		$725.00		
Heavy Slide Tray (600 LB Rated) - Floor Mounted		$650.00		
Heavy Slide Tray (1000 LB Rated) -Floor Mounted		$680.00		
Heavy Slide Tray For Rear Cargo Area (1000 LB Rated)		$1,580.00		
Roll Out Tool Board		$750.00		
Full Height Compartment Divider (Includes Unistrut)		$480.00		
Plastic Floor Tile compartment floors		$118.00		
Plastic Floor Tile installed on 12" deep shelf / Tray (each)		$60.00		
Plastic Floor Tile compartment floors		$118.00		
Plastic Floor Tile installed on 24" deep shelf / Tray (each)		$75.00		
PUMPS & PLUMBING:				
Hale Q FLow 1250 GPM Pump in Lieu of Hale Q Max1500 GPM (2 x2.5" LS, 2 x 2.5" RS, and 4" Waterway)		($3,300.00)		

11 Sperti Drive, Edgewood, KY 41017
(859)331-0360
FAX: (859)331-0399

SUMMIT
Fire Apparatus and Custom Fabricators

DESCRIPTION	QTY	PRICE	STD. OPT	INCLUDED OPT.
SUMMIT 103' QUINT		$706,300.00		
Hale Q FLow 1750 GPM Pump in Lieu of Hale Q Max1500 GPM (2 x2.5" LS, 2 x 2.5" RS, LDD On RS and 4" Waterway)		$3,600.00		
Hale Q FLow 2000 GPM Pump in Lieu of Hale Q Max1500 GPM (2 x2.5" LS, 2 x 2.5" RS, LDD RS and 4" Waterway)		$3,600.00		
Waterous CSY 1250 GPM in Lieu Of The Hale Q Max 1500 GPM (2 x2.5" LS, 2 x 2.5" RS, and 4" Waterway)		$1,820.00		
Waterous CSY 1500 GPM in Lieu Of The Hale 1500 GPM		$2,290.00		
1.5" Trash Line Run to Front Bumper (Must Select Bumper Extension)		$1,100.00		
5" Front Intake (Vertical Through Bumper Extension With Air Operated Valve)		$6,820.00		
LDH Discharge on Right Side Pump Panel		$1,900.00		
Right Side 2.5"Suction		$1,325.00		
2.5" Rear Discharge - One (1) Right Hand		$2,100.00		
Hose Well In Pump House Running Board - Includes Velcro Strap		$750.00		
Foam Pro 1600 Includes Foam Cell In Tank (X-Lays Only)		$6,320.00		
Foam Pro 2001 - Single Foam System, Includes Foam Cell In Tank (X-Lays & Trash)		$7,900.00		
Foam Pro 2001 - Dual Foam System, Includes Two Foam Cells In Tank (X-Lays & Trash)		$9,800.00		
Foam Pro 2024 - Single Foam System, Includes One Foam Cell In Tank (X-Lays,Trash, One 2-1/2")		$9,720.00		
Foam Pro 2024 - Dual Foam System, Includes Two 20 Gallon Foam Cells In Tank (X-Lays,Trash, One 2-1/2")		$11,160.00		
Foam Pro Uplift System - Single		$2,350.00		
Foam Pro Uplift System - Dual		$4,580.00		
Pull Out Pump Operators Step		$575.00		
ELECTRIC:				
Kussmaul Battery Conditioner with Auto Eject In Lieu of Polarity Plug		$995.00		
Kussmaul Pump Plus, Battery Conditioner with Auto Eject In Lieu of Polarity Plug		$1,760.00		
Auto Air Eject For House Air Supply		$445.00		
Whelen 900 Series LED In Upper Zones B&D and C in lieu of Beacons		$420.00		
Single Strip LED Strip Compartment Lighting in lieu single LED		$750.00		
Dual Strip LED Strip Compartment Lighting in lieu single LED		$1,620.00		
LED Ground lights under front of body		$240.00		
LED Ground light under front bumper		$180.00		

11 Sperti Drive, Edgewood, KY 41017
(859)331-0360
FAX: (859)331-0399

Fire Apparatus and Custom Fabricators

DESCRIPTION	QTY	PRICE	STD. OPT	INCLUDED OPT.
SUMMIT 103' QUINT		$706,300.00		
LED Whelen 900 Scene lighting - One (1) on Each Side of Rear Compartment (2 total)		$740.00		
LED Whelen 900 Scene lighting - Two (2) on Upper Cab Side		$880.00		
LED FRC Spectra 900 Scene lighting - One (1) on Each Side of Rear Compartment (2 total)		$1,060.00		
LED FRC Spectra 900Scene lighting - Two (2) on Upper Cab Side		$1,090.00		
Cab Brow Light - Two (2) One Each Side, Over Cab - Whelen PFA2 Pioneer 7400 Lumen, L.E.D, 12 Volt		$3,180.00		
Cab Brow Light - Two (2) One Each Side, Over Cab - Whelen PFP2 Pioneer 16000 Lumen, L.E.D, 12 Volt		$4,026.00		
Cab Brow Light - Two (2) One Each Side, Over Cab - FRC FCA800-V08 8,000 Lumen, L.E.D, 12 Volt		$2,930.00		
Cab Brow Light - Two (2) One Each Side, Over Cab - FRC FCA800-V15 15,000 Lumen, L.E.D, 12 Volt		$3,192.00		
Cab Brow Light - Two (2) One Each Side, Over Cab - FRC SPA800-Q15 15,000 Lumen, L.E.D, 12 Volt		$3,618.00		
Cab Brow Light - Two (2) One Each Side, Over Cab - FRC SPA800-Q20 20,000 Lumen, L.E.D, 12 Volt		$4,006.00		
120/240 VOLT ELECTRICAL OPTIONS				
5000 W Gasoline Powered Honda Generator - Mounted on slide tray (Elec Start)		$4,200.00		
5000 W Gasoline Powered Generator - Mounted on slide tray (Elec Start)		$2,800.00		
3000 W Baldor Diesel Generator Mounted on slide tray (Elec Start)		$4,200.00		
5500 W Baldor Diesel Generator Mounted on slide tray (Elec Start)		$5,450.00		
120/240 Volt load center with up to 4 breakers & pigtail for genertaor (Gas or Diesel Generators Only)		$750.00		
Fuel Tap from chassis (Diesel)		$610.00		
6 KW Smart Power Hydraulic Generator With Load Center		$11,828.00		
8 KW Smart Power Hydraulic Generator With Load Center		$14,923.00		
10KW Smart Power Hydraulic Generator With Load Center		$15,972.00		
15KW Smart Power Hydraulic Generator With Load Center		$20,321.00		
20KW Smart Power Hydraulic Generator With Load Center		$22,206.00		
Remote Generator Activation From Pump Panel		$250.00		
Exterior Receptacles - Covered Duplex 5-20		$285.00		
Interior 120 Volt Receptacles - Cab, Duplex 5-15		$320.00		
Interior 120 Volt Receptacles - Body Compartrment, Duplex 5-15		$250.00		
220 Volt Receptacle - Body Compartment		$295.00		

Fire Apparatus and Custom Fabricators

DESCRIPTION	QTY	PRICE	STD. OPT	INCLUDED OPT.
SUMMIT 103' QUINT		$706,300.00		
Electric Cord Reel - 200' 10/3 Black Cable		$2,180.00		
Electric Cord - 200' 10/3 Yellow Cord In Lieu Of The Black		$180.00		
Electric Cord Ball Stop		$25.00		
Electric Junction Box - Akron With 4 L5-20 Receptacles		$425.00		
Electric Junction Box - Circle D With 4 L5-20 Receptacles		$545.00		
Fair Lead, Cord Reel - Hannay 4 Way		$180.00		
Sumit Extendible or Swing Out Fair Lead		$340.00		
Junction Box Mounting Bracket - Aluminum		$150.00		
Side Mount Push-Up Lights - Akron ELNB-750-Pod 120Volt, 750 Watt Lights (Per Pair)		$1,665.00		
Side Mount Push Up Lights - FRC FCA530-S75 120 Volt 750 Watt Lights (Per Pair)		$1,632.00		
Side Mount Push Up Lights - FRC FCA530-M10 1000 Watt Lights (Per Pair)		$1,745.00		
Side Mount Push Up Lights - FRC FCA530-M12 240 Volt, 1000 Watt Lights (Per Pair)		$1,832.00		
Side Mount Push Up Lights - FRC OPA530-S75 120 Volt 750 Watt Lights (Per Pair)		$1,685.00		
Side Mount Push Up Lights - FRC OPA530-M10 1000 Watt Lights (Per Pair)		$1,847.00		
Side Mount Push Up Lights - FRC OPA530-M12 240 Volt, 1000 Watt Lights (Per Pair)		$1,910.00		
Light Tower - Wil-Burt NS3.0-2700 Profiler Mounted On Cab Roof		$13,887.00		
Light Tower - Wil-Burt NS3.0-3000 Profiler Mounted On Cab Roof		$14,244.00		
Light Tower - Wil-Burt NS3.0-4500 Profiler Mounted On Cab Roof		$15,870.00		
Light Tower Fairing - Aluminum, Cab Mounted, Painted to Match		$1,780.00		
Light Tower Fairing - Treadplate Aluminum, Cab Mounted		$1,300.00		
PAINT:				
Two Tone Chassis - Custom Cab MFD		$3,550.00		
Painting Jambs in addition to paint (4 Door)		$1,200.00		
Two Tone Body		$2,550.00		
Body Undercoating		$415.00		
Painted Steel Wheels to Job Color		$460.00		
STRIPING & LETTERING:				
NFPA Perimeter Stripe 4"		$642.00		
1- 4 -1 NFPA Perimeter Stripe 4" with 1" stripe above and below		$792.00		
Z pattern in stripe		$130.00		

11 Sperti Drive, Edgewood, KY 41017
(859)331-0360
FAX: (859)331-0399

Fire Apparatus and Custom Fabricators

DESCRIPTION	QTY	PRICE	STD. OPT	INCLUDED OPT.
SUMMIT 103' QUINT		$706,300.00		
Sixty (60) 3" Reflective Lettering		$705.00		

11 Sperti Drive, Edgewood, KY 41017
(859)331-0360
FAX: (859)331-0399

Fire Apparatus and Custom Fabricators

DESCRIPTION	QTY	PRICE	STD. OPT	INCLUDED OPT.
SUMMIT 100' PLATFORM		$822,300.00		
CHASSIS				
Gladiator	1			
Summit Fire (SUM1001)				
Model Year - 2015				
Country of Service United States Of America				
Apparatus Type Rear Mount Quint				
Rear Mount Aerial Device Series 100 Platform MUX				
Vehicle Type Straight Truck				
Axle Configuration 6x4 (Rear Tandem Axle Drive Only)				
GAWR Front 21500#				
GAWR Rear 58000#				
Pump Provision Driveline Midship				
Cab Style MFD 10" Raised Roof				
Occupant Protection Advanced Protection System				
Cab Frt Fascia Classic				
Cab Frt Grille Hinged Classic Styled				
Cab Undercoat				
Cab Side Drip Rail				
Cab Paint Exterior Single Color				
Cab Paint Manufacturer PPG				
Cab Paint Primary/Lower Color No Selection/TBD				
Cab Paint Warranty 2015 (10) Year/100,000 Miles				
Cab Paint Int Zolatone Silver Gray				
Cab Entry Doors (4)				
Cab Entry Door Type Full Length				
Cab Insulation				
Cab Roof Trench 50"W x 10"D				
Cab Structural Warranty 2015 (10) Year/100,000 Miles				
Cab Test Information Crash Test ECE-R29/SAE J2420/SAE J2422				
Elec System 12V DC MUX				
MUX Display Weldon Touchscreen IV LH Sw Pnl				
Data Recording Sys Vehicle Data Weldon MUX				
Accessory Pwr & Gnd Stud 40A Batt Dir & 15A Ign Sw				
Aux Acc Pwr & Gnd Stud Bhd Sw Pnl 40A Mstr Sw				
Addl Acc Pwr 10 Fuse Pnl Bhd Off Seat w/40A Fuse Batt Dir				
Exterior Electrical Terminal Coating Spray On Plasti Dip				
Engine Diesel 500HP Cummins ISX12 - EPA 2013				
Cab Engine Tunnel Large				
DPF Ctrl Regeneration Sw & Inhibit Sw				
Engine Programming High Idle Speed 1250 RPM				
Engine High Idle Ctrl Manual and Automatic w/V-MUX				
Engine Programming Road Speed Governor Enabled				
Aux Engine Brake Compression Brake w/VG Turbo				

11 Sperti Drive, Edgewood, KY 41017
(859)331-0360
FAX: (859)331-0399

Fire Apparatus and Custom Fabricators

DESCRIPTION	QTY	PRICE	STD. OPT	INCLUDED OPT.
SUMMIT 100' PLATFORM		$822,300.00		
Aux Engine Brake Ctrl Off/Low/Med/High MUX				
Elec Engine Oil Level Indicator				
Fluid Fills Fwd For Large Displacement Cap				
Engine Drain Plug				
Engine Warranty Cummins (5) Year/100,000 Miles				
Engine Program Rmt Throttle On				
Engine Programming Idle Speed 700 RPM				
Engine Fan Drive Clutch				
Engine Cooling Sys Serial Flow Large				
Engine Cooling System Protection Light Duty Skid Plate				
Engine Coolant Extended Life				
Engine Coolant Filter				
Elec Low Coolant Level Indicator				
Engine Pump Heat Exchanger				
Coolant Hoses Silicone Heater & Radiator w/Cab Int Rubber Hoses				
Engine Air Intake Filtration and Restriction w/Replaceable Element				
Air Intake Protection Light Duty Skid Plate				
Eng Exhaust Sys Under Frm RH Outboard w/DPF/SCR Inline				
Diesel Exhaust Fluid Tank LH 6 Gal Fill Thru Rr Step				
Engine Exh Acc Exh Temp Mitigation				
Engine Exhaust Wrap				
Transmission Allison 4000 EVS				
Transmission Mode Programming 5th Startup/6th Mode				
Transmission Feature Programming Allison Gen V-E I/O Package 198/Pumper				
Transmission GEN V-E Shift Sel Key Pad/Push Button				
Elec Transmission Oil Level Indicator				
2nd Gear Pre-Select				
Transmission Cooling System				
Transmission Drain Plug				
Transmission Warranty Allison (5) Year				
LH PTO Spartan Sply				
LH PTO Model Chelsea 277-XGFJP-B5RA				
PTO Location 8:00/1:00				
PTO Ctrl LH Aerial PTO Prog Vista Actv Labeled Aerial On/Off/Active w/Neutral				
Driveline Spicer 1810/1710 HD				
Midship Pump Jackshaft Only				
Midship Pump/Gearbox Model Hale QMAX				
Midship Pump Gearbox Drop Hale "S"				
Midship Pump Ratio 2.28:1 (23)				
Midship Pump Location C/L Suction to C/L Rear Axle 110.0"				

11 Sperti Drive, Edgewood, KY 41017
(859)331-0360
FAX: (859)331-0399

Fire Apparatus and Custom Fabricators

DESCRIPTION	QTY	PRICE	STD. OPT	INCLUDED OPT.
SUMMIT 100' PLATFORM		$822,300.00		
Fuel Filter/Wtr Separator Fleetguard FS1003 w/Lt & Alarm				
Fuel Lines Wire Braid				
Electric Fuel Primer Engine Sply Electric Lift Pump				
Fuel Tank 50 Gallon				
Fuel Tank Fill Port LH Rwd/RH Mid				
Frt Axle Meritor MFS 21500# Beam				
Front Axle Warranty Meritor 2015				
Frt Wheel Bearing Lube Oil				
Frt Shock Absorbers Bilstein				
Frt Suspension 9 Leaf 20000-21500#				
Steering Column/Wheel Tilt/Telescopic 18" 4 Spoke				
Elec Power Steering Fluid Level Indicator				
Power Steering Pump TRW				
Front Axle Cramp Angle 48L/44R Degrees				
Power Steering Gear TRW TAS 85 w/Assist				
Chassis Alignment				
Rear Axle 63000# Meritor RT-58-185				
Rear Axle Warranty Meritor 2015				
Rear Axle Differential Lubrication Oil				
Rear Wheel Bearing Lubrication Oil				
Rear Axle Differential Ctrl Interaxle Lock				
Vehicle Top Speed 65 MPH				
Rear Susp Ridewell RD-202 Rubber 60000#				
Rear Shock Absorbers Suspension Sply				
Frt Tire 425/65R 22.5 Michelin XZY3				
Rear Tire 315/80R 22.5 Michelin XZA1				
Rear Axle Ratio 6.14				
Tire Pressure Ind Frt Only RealWheels Tire Watch LED Voucher				
Frt Wheel Accuride 22.5 x 12.25 Steel				
Rr Whl Accuride 22.5 x 9.00 Steel				
Wheel Paint Primary/Lower Cab Color				
Brake System ABS/ATC/ESC Tandem Axle MUX Btn				
Frt Brakes S-Cam Drum 16.5" x 6"				
Rr Brakes S-Cam Drum 16.5" x 7" Cast Iron Shoe				
Prk Brake Rr Wheels Only				
Prk Brake Ctrl Ctr Tunnel Mnt				
Frt Brake Slack Adjusters Meritor				
Rr Brake Slack Adjusters Gunite				
Air Dryer Wabco System Saver 1200 Bhd LH Batt Box				
Frt Brake Chambers MGM Type 30				
Rr Brake Chambers TSE 30/36 Long Stroke				
Air Compressor Wabco SS318 18.7 CFM				
Air Governor Mnt on Air Dryer Bracket				

Fire Apparatus and Custom Fabricators

DESCRIPTION	QTY	PRICE	STD. OPT	INCLUDED OPT.
SUMMIT 100' PLATFORM		$822,300.00		
Moisture Ejectors Manual/Auto Wet Tank				
Air Sply Lines Nylon				
Rear Air Tank Mnt Any Bhd Rear Axle Perpendicular w/Frame				
Wheelbase 245.0"				
Rear Overhang 110.0"				
Frame Double Channel 35.00" Width				
Frame Warranty Lifetime 2015				
Frame Paint Powder Coat Black				
Frt Bumper Stainless Steel Flat				
Frt Bumper Extension Length 24"				
Frt Bumper Extension Frame Width 48.25"				
Air Horn 24" Round Hadley E-Tone				
Air Horn Location Frt Bmpr Face LH IB				
Air Horn Reservoir (1) 1200 Cu In				
Frt Bumper Tow Hooks Painted Side Rwd				
Cab Tilt System				
Cab Tilt Ctrl Receptacle Temp				
Cab Windshield				
Glass Frt Dr Roll Down/XDuty Regulator				
Glass Tint Frt Dr Automotive Green				
Glass Rr Dr RH Roll Down/XDuty Regulator				
Glass Tint Rr Door RH Automotive Green				
Glass Rr Dr LH Roll Down/XDuty Regulator				
Glass Tint Rr Door LH Automotive Green				
Glass Side Mid RH Fxd 16"W x 26"H				
Glass Tint Side Mid RH Automotive Green				
Glass Side Mid LH Fxd 16"W x 26"H				
Glass Tint Side Mid LH Automotive Green				
Climate Ctrl Htr Defroster Frt Ovrhd/Htr A/C Tunnel Mnt				
Climate Control Drain Gravity				
Climate Ctrl Actv Device Mnt Ovrhd/Device Mnt Tunnel				
A/C Condenser Location Roof Mnt Mid LH				
A/C Compressor Large Capacity				
Under Cab Insulation Engine Tunnel				
Interior Trim Floor				
Interior Trim Vinyl				
Rear Wall Interior Trim Vinyl				
Header Trim ABS				
Trim Center Dash ABS				
Trim LH Dash ABS				
Trim RH Dash ABS Glove Cmpt/MDT Prov				
Eng Tnl Trim Flr Mat				
Step Trim Grip Strut Lwr Flex-Tred Mid				
Under Cab Access Door Rear Step LH Painted				

11 Sperti Drive, Edgewood, KY 41017
(859)331-0360
FAX: (859)331-0399

Fire Apparatus and Custom Fabricators

DESCRIPTION	QTY	PRICE	STD. OPT	INCLUDED OPT.
SUMMIT 100' PLATFORM		$822,300.00		
Interior Door Trim Painted				
Door Trim Customer Nameplate				
Cab Dr Trim Reflective Vert Stripe/6" Chevron w/Logo				
Interior Grab Handle 'A' Pillar 11" Molded				
Interior Grab Handle Frt Door Horiz 9"				
Int Grab Handle Rr Dr Alum Window Span 30" Black Powder Coat				
Interior Trim Vinyl Color Gray				
Interior Trim Sunvisor Vinyl				
Interior ABS Trim Color Gray				
Interior Floor Mat Color Gray				
Cab Paint Int Dr Trim Zolatone Silver Gray				
Dash Pnl Group 3-Pnl				
Switches Ctr Pnl 6 Upr LH				
Switches Left Pnl 1 Wiper				
Switches Right Pnl 3 Far RH Ctr				
Seat Belt Warn Vista Display w/VDR				
Seat Material Ballistic				
Seat Color Gray/Red Seat Belts				
Seat Back Logo Spartan Chassis				
Seat Driver Bostrom Firefighter 4-Way Air Non-ABTS				
Seat Back Driver Non-SCBA Non-ABTS				
Seat Mounting Driver				
Occupant Protection Driver Advanced Protection System				
Seat Officer Bostrom Firefighter 2-Way Manual ABTS				
Seat Back Officer Non-SCBA ABTS				
Seat Mounting Officer				
Occupant Protection Officer Advanced Protection System				
Seat Belt Orientation Crew Outboard Shoulder To Inboard Hip				
Seat RFO Location (2) R/L				
Seat Crew RFO Bostrom Firefighter Fixed				
Seat Back RFO SCBA Bostrom SecureAll w/Quick-Adjust				
Seat Mounting Rear Facing Outer				
Occupant Protection RFO Advanced Protection System				
Seat FFC Location (2) Ctr				
Seat Crew FFC Bostrom Firefighter Flip-Up				
Seat Back FFC SCBA Bostrom SecureAll w/Quick-Adjust				
Occupant Protection FFC Advanced Protection System				
Seat Frm Fwd Fcg Dual				
Seat Frm Fwd Fcg Strg Acc Dr (2) R/L Sd				
Seat Mounting Forward Facing Center				
Cab Frt Undrst Strg Acc Dr				
Seat Compartment Door Finish Zolatone Silver Gray				
Windshield Wiper System Single Motor				

SUMMIT
Fire Apparatus and Custom Fabricators

DESCRIPTION	QTY	PRICE	STD. OPT	INCLUDED OPT.
SUMMIT 100' PLATFORM		$822,300.00		
Electronic Windshield Fluid Level Indicator				
Cab Door Hardware Black				
Door Locks Manual				
Grab Handles SS 18"				
Mirror Aerodynamic Retrac 613265 Rmt				
Cab Fender Alum				
Cab Ext Frt & Side Emblems w/Side Emblem Integrated Model Nameplate				
Cab Exterior Model Nameplate Gladiator Advanced Protection System w/Emblem				
Ign Mstr Sw w/Keyless Start				
Batt (6) Group 31 Harris				
Batt Tray (2) R/L Steel				
Batt Box Cover (2) Steel w/Black Handles				
Batt Cables				
Batt Jumper Stud Frt LH Lwr Step				
Alternator Leece-Neville 270A				
Headlights 4 Headlamps Halogen				
Frt Turn Signals Whelen 600 Series Halogen				
Headlights Below Frt Warn Lts				
Side Turn/Marker Lts LED				
Marker & ICC Lts Face Mnt LED				
Hdlt & Mrkr Lt Actv MUX/DRL				
Ground Lts Resp Side Dr & Vista				
Step Lts LED				
Engine Cmpt Work Lt (1)				
Interior Overhead Lts Weldon w/Front Map Lts/MUX Actv				
Do Not Move App Lt Flashing Red w/Alarm				
Mstr Warn Sw MUX				
Headlight Flasher Alternating				
Headlight Flasher Sw MUX				
Inboard Frt Warn Lts Whelen 600 Super LED Chrm Bezel				
Inboard Frt Warn Lts Color Red				
Frt Warn Sw Vista				
Horn Btn Sel Sw Elec Horn/Air Horn MUX				
Air Horn Actv Strg Whl/RH Ft Sw				
Back-Up Alarm Ecco 575				
Instrumentation Standard				
Backlighting Color Red				
Hour Meter Honeywell in Instrument Pnl for LH PTO				
Panel Layout				
Aerial Device 100' Rear Mount Steel Telescoping Turntable Ladder w/Platform				

11 Sperti Drive, Edgewood, KY 41017
(859)331-0360
FAX: (859)331-0399

Fire Apparatus and Custom Fabricators

DESCRIPTION	QTY	PRICE	STD. OPT	INCLUDED OPT.
SUMMIT 100' PLATFORM		$822,300.00		
Aerial Device Waterway System Series 100 w/Rr Inlet/Rr E-Discharge				
Aerial Device Waterway Flow Meter Class 1 Flow Minder				
Aerial Electric Monitor Akron 3578				
Aerial Electric Nozzle Akron Akromatic 1250 Master Stream				
Aerial Device Aux Discharge Two (2) 2.5" Platform Discharge				
Front Aerial Device Outriggers H-Style 18' Stance				
Rear Aerial Device Outriggers H-Style 18' Stance				
Aerial Device Aux Outrigger Pads Dual Sets Alum				
Aerial Device Outrigger Ground Lights (4) LED				
Aerial Device Outrigger Warn Lights (8) LED Red 3"H x 5"W				
Aerial Device Emergency Hydraulic Ladder Pump (2) 12V				
Aerial Device Turntable Side Hosebed Access				
Turntable Deck Access Sgl Handrail Opening w/Safety Chain				
Turntable Ctrl Station Rear Mnt Aerial Platform Drv Sd				
Turntable Work Lights (5) Halogen in Turntable Step Cvr				
Aerial Device Platform Series 100				
Platform Control Station				
Aerial Platform Coverings				
Aerial Platform Warning Lights Whelen 600 Super LED				
Platform Int Work Lights (4) LED On-Scene 9" Night Axe				
Aerial Device Spot Light (2) Unity Spot Platform				
Aerial Device Tracking Spot Light (2) Unity Spot				
Rotation Swivel				
Apparatus Level Indicator (2), (1) Side-to-Side and (1) Fore/Aft Shiploose				
Aerial Comm System Atkinson Two position Intercom				
Aerial Device Paint PPG White FBCH 2185				
Aerial Device Lift Cylinder Paint PPG White FBCH 2185				
Aerial Device Travel Rest Paint PPG Black FBCH 9000				
Aerial Outrigger Paint PPG Silver Mtlc FBCH 33723				
Aerial Torque Box/Turntable/Control Station Paint PPG Black FBCH 9000				
Aerial Extension/Retraction Cylinder Paint PPG Black FBCH 9000				
Aerial Platform Handrail Paint PPG Black FBCH 9000				
Aerial Platform Frame Paint PPG Black FBCH 9000				
Aerial Device Operation Manuals (2) Hard Copy w/(2) Digital Parts Manuals				
Aerial Device As Built Wiring Diagram Digital Copy (2)				
Aerial Device As Built Hydraulic Diagram Digital Copy (2)				
Aerial Device Warranty 2015 Ladder w/Waterway General Coverage				
Aerial Device Training (3) Days				

11 Sperti Drive, Edgewood, KY 41017
(859)331-0360
FAX: (859)331-0399

Fire Apparatus and Custom Fabricators

DESCRIPTION	QTY	PRICE	STD. OPT	INCLUDED OPT.
SUMMIT 100' PLATFORM		$822,300.00		
Cab Exterior Protection Front				
Fire Extinguisher Ship Loose				
Door Keys for Manual Locks (4)				
Diagnostic Software Occupant Protection Advanced Protection System				
Warranty Cab and Chassis 2015 (2) Year				
Cab and Chassis Labeling Language English				
Chassis Operation Manual Digital Copy (2)				
Eng & Trans Operation Man Eng Hard Copy/Trans Digital/Eng Owner Digital				
Cab/Chassis As Built Wiring Diagrams Digital Copy (2)				
Sales Terms				
End of Frame Cross Member				
CHASSIS MODIFICATIONS				
Front Bumper Extenion - Factory Extension	1		x	
Front Bumper Extension Storage - Delete	1		x	
Front Bumper Extension Gravel Shield - Aluminum Treadplate	1			x
Tire Chains - Delete	1		x	
Rear Tow Eyes - Painted Under Rear Tailboard	2		x	
Tire Pressure Monitoring System - Valve Stem Low Pressure Indicators	1		x	
Wheels - Unfinished	1		x	
Front Mud Flaps	1		x	
Rear Mud Flaps	1		x	
Fluid Identifcation Plate	1		x	
Fuel Type Label - Diesel	1		x	
Seating Label - Maximum Seating Of 2	1		x	
Vehicle Height Label	1		x	
Seatbelt Warning Label	1		x	
Riding On Step Warning Label - Rear of Body	1		x	
Helmet In Cab Warning Label	1		x	
NFPA Helmet Storage - Department To Mount In Body	1		x	
BODY - Aerial				
Body Construction - Combination Formed Sheet / Extruded	1		x	
Body Subframe - Aluminum Extruded	1		x	
Material - .160" and .190" 5052 Aluminum	1		x	
Body Mounting	1		x	
Polymer Isolation Strips - Chassis Frame	1		x	
Construction - All Aluminum	1		x	
Body Dimensions - 16' Long, 90" High, 100" Wide	1		x	
Compartment Interiors - Unfinished Aluminum	1		x	
Compartment Floors - Raised Sweep-out Type	1		x	

SUMMIT
Fire Apparatus and Custom Fabricators

DESCRIPTION	QTY	PRICE	STD. OPT	INCLUDED OPT.
SUMMIT 100' PLATFORM		$822,300.00		
Fenderettes - Polised Stainless Steel	2		x	
Wheel Well Liners - Full Removable Poly Liners	2		x	
Corrosion Protection Pkg - Anti Corrosion Compound and Nylon Spacers on All Fasteners	1		x	
Fuel Fill Pocket - Cast Aluminum Houseing w/ Door	1			x
Right Side Hose Bed Storage - Aluminum Extruded Floor	1		x	
Rear Access Ladder & Pike Pole Storage Compartment - Below Turn table	1		x	
Turntable Access Steps, Access landing	1		x	
COMPARTMENTATION - 7-Bay				
L1 Compartment Dimensions - 60" Wide x 70" High x 14" Deep Upper, 25.95" Deep Lower	1		x	
L1 Adjustable Shelf Hard ware - P100 Aluminum Unistrut	1		x	
L2 Compartment Dimensions - 23" Wide x 38" High x 14" Deep	1		x	
L2 Adjustable Shelf Hard ware - P100 Aluminum Unistrut	4			x
L3 Compartment Dimensions - 55" Wide x 28" High x 14" Deep	1		x	
L3 Adjustable Shelf Hard ware - P100 Aluminum Unistrut	4			x
L4 Compartment Dimensions - 19" Wide x 62" High x 14" Deep upper, 25.95" Deep Lower	1		x	
L4 Adjustable Shelf Hard ware - P100 Aluminum Unistrut	4			x
R1 Compartment Dimensions - 60" Wide x 70" High x 14" Deep Upper, 25.95" Deep Lower			x	
R1 Adjustable Shelf Hard ware -Delete (Pump Compartment)				x
R2 Compartment Dimensions - 42" Wide x 28" High x 25.95" Deep	1		x	
R2 Adjustable Shelf Hard ware - P100 Aluminum Unistrut	4			x
Rear Ladder Compartment Dimensions - 36" Wide x 36" High	1			
Compartment Doors - ROM Roll Up Doors	7			x
Door Finish - Anodized	1		x	
Top Seal - Drip Rail With Wiper	7		x	
Internal Drip Pans - Delete	1		x	
Door Locks - Delete	1		x	
BODY UPFIT:				
Turn Table Access - Zico Quic-Ladder	1			x
Roof Access Ladder Deployment Warning - Activate Compartment Ajar Light When Deployed	1			x
Grab Rail - Apparatus Rear	1			x
Right Side Rear Hose Bed	1		x	
Hose Bed Dividers - 1	1		x	
Hose Bed Cover - Vinyl Tarp Cover with buckles	1		x	

11 Sperti Drive, Edgewood, KY 41017
(859)331-0360
FAX: (859)331-0399

Fire Apparatus and Custom Fabricators

DESCRIPTION	QTY	PRICE	STD. OPT	INCLUDED OPT.
SUMMIT 100' PLATFORM		$822,300.00		
Chrome Rear Stanchions For Beacons	2		x	
PUMP	1		x	
Pump - Hale 1500 GPM	1		x	
Gearbox - In Cab Pneumatic Shift	1		x	
Pump Shift Overide - Driverside Pump Panel	1			x
Pump Seals - Mechanical	1		x	
Priming Pump - Oiless	1			x
Auxillary Cooler / Heat Exchanger - Pump/Engine Circulator	1		x	
Intake Relief Valve - Pressure Relief Valve	6		x	
Master Drain - Drivers Side Lower Pump Panel	1		x	
Drains - Quarter Turn Valves Drivers Side Pump Panel	1		x	
Thermal Relief Valve - Delete	1			x
Cooling Line - Delete	1			x
Plumbing - Stainless Steel & High Pressure Hose	1		x	
Valves - Hale Stainless Series Quarter Turn	1		x	
Pump Anode - One	1			x
Pump Test - Manufacturer Class A NFPA 1901	1		x	
Suction Releif - Terminate Below Pump House Away From Work Area	1			x
Steamer Inlets - 6"	1		x	
6" Gated Inlets - Delete	2		x	
MIV Contol - Delete	2		x	
MIV Contol Location - Delete	1		x	
Steamer Caps - 6" Long Handle Chrome	1		x	
Left Side Auxillary Intake - (1) 2.5" Aux Intake	1		x	
Left Side Auxillary Intake Control - Lever	1			x
Left Side Auxillary Intake Termination - Chrome Plug and Chain	1		x	
Right Side Auxillary Intake - (1) 2.5" Aux Intake	1		x	
Right Side Auxillary Intake Control - Electric	1		x	
Right Side Auxillary Intake Termination -Chrome Cap with Chain	1		x	
Pump Module - 72" Width Self-Supported Structure Independent of Body	1			x
Pump Module To Body Flex Joint	1		x	
Pump Module - Traditional Side Mount	1			x
Pump Module Construction - Aluminum Extruded	1		x	
Pump Control Panel - Side Mount Control	1		x	
Dunnage Storage Area - Delete	1			x
Grab Handles - Two (2) Mounted to Module, One On Each Side	2		x	
Pump Panel Construction - Stainless Steel	1			x
Valve Controls - Class One Locking Push Pull	8			x

11 Sperti Drive, Edgewood, KY 41017
(859)331-0360
FAX: (859)331-0399

Fire Apparatus and Custom Fabricators

DESCRIPTION	QTY	PRICE	STD. OPT	INCLUDED OPT.
SUMMIT 100' PLATFORM		$822,300.00		
Pressure Gauges - 2.5" Class One Line Gauges	2		x	
Master Gauges - 3.5"	1		x	
Pressure Governor - Class 1 TPG Plus	1			x
Auxiliary Fuel Guage - Delete	1			x
Water Level Gauge - Class One 1 ITL	1		x	
U.L. Test Ports	1		x	
Data Plate - Driver Side Pump Panel	1		x	
Labels - All Intakes, Discharges, Drains & Gauges NFPA Labeled & Color Coded	1		x	
Tank To Pump Valve - 3" 1/4 Turn Ball Valve	1		x	
Tank Fill Valve - 1.5" 1/4 Turn Ball Valve	2		x	
Left Side Discharges - Two (2) 2.5"	2		x	
Left Side Discharge Control - Class 1 Locking Push / Pull	2		x	
Left Side Discharge Termination - 2.5" Chrome Cap With Chain	2		x	
Right Side Forward Discharge -Two (2) 2.5"	2		x	
Right Side Forward Discharge Control - Class 1 Locking Push / Pull	2		x	
Right Side Forward Discharge Termination - 2.5" Chrome Cap With Chain	2		x	
Right Side Rearward Discharge - One (1) 2.5"	1		x	
Right Side Rearward Discharge Control - Class 1 Locking Push / Pull	1		x	
Right Side Rearward Discharge Termination - Chrome Cap and Chain	1		x	
Large Diameter Discharge - One (1) Akron 4" Electric	1		x	
Large Diameter Discharge Control - Electric	1		x	
Large Diameter Discharge Termination - Aerial Waterway	1			x
1.75" Crosslays Above of Pump Module - (2) 1.75"	2		x	
Crosslay Controls - Class 1 Locking Push / Pull	2		x	
2.5 " Crosslays Above Pump Module - Delete	1		x	
Crosslay 2.5" Controls - Delete	1		x	
Front Bumper Trashline/Jumpline - Delete	1		x	
Front Bumper Trashline Discharge Control - Delete	1		x	
Front Bumper Discharge Termination - Delete	1		x	
Pump Compartment Light - (1) Vista Strip LED Across Top (In Adddition To Door Lights)	1		x	
Foam System - Delete	1		x	
Foam Control - Delete	1		x	
Foam Flush Control - Delete	1		x	
Foam Strainer Clean Out - Delete	1		x	
Foam Selector - Delete	1		x	
Foam Check Valves - Delete	1		x	
Flow Meter(s) - Delete	1		x	
Low Tank Level Switch - Delete	1		x	

Fire Apparatus and Custom Fabricators

DESCRIPTION	QTY	PRICE	STD. OPT	INCLUDED OPT.
SUMMIT 100' PLATFORM		$822,300.00		
Foam Up Load System - Delete	1		x	
Pull Out Pump Operators Platform - Delete	1		x	
TANK	1		x	
Booster Tank - UPF Poly 500	1		x	
ISO Certification - 9001:2008	1		x	
Construction - Pt3 Polypropylene	1		x	
Closed Curve Baffling	1		x	
Fill Tower W/Cover - Center Mount	1		x	
Vent Overflow - 4 Inch	1		x	
Sump	1		x	
3" Npt Threaded Outlet Bottom Of Sump	1		x	
Foam Cell - Delete	1		x	
Foam Drain - Delete	1		x	
12 VOLT ELECTRICAL REQUIRMENTS				
12 Volt Elctrical System - Multiplex System	1		x	
Wiring Requirments - NFPA 1901	1		x	
SAE Practices & FMVSS Compliant	1		x	
Wiring - GXL Stranded Copper	1		x	
12V Dc Voltage Output Testing & Documentation	1		x	
Switch Panel - Cab mounted - One Master Switch Warning System	1		x	
Reserve Capacity Test:	1		x	
Alternator Performance Test At Idle:	1		x	
Alternator Performance Test At Full Load:	1		x	
Low Voltage Alarm Test:	1		x	
Documentation - NFPA Test Results	1		x	
Battery Disconnect Switch - Supplied Chassis Manufacturer	1		x	
Battery Light - Green L.E.D. Dash Mounted	1		x	
Clearance / Marker Lights - Tecniq P2 L.E.D	21		x	
License Plate Bracket and Light - Arrow	1		x	
Brake Lights, - Whelen 600 Series Red L.E.D.	2		x	
Turn Lights - Whelen 600 Series Amber L.E.D.	2		x	
Backup Lights - Whelen 600 Series Clear L.E.D.	2		x	
Light Cluster Housing - Chrome	2		x	
Light Bar - Delete	1		x	
Blocking Right Away	1		x	
Whelen Mini NFPA Ultra Freedom Bars - On Cab Raised Roof	2			x
Lower Zone A Warning Lights - Whelen 600 Series L.E.D. Supplied Chassis Mfg	2		x	
Lower Zone B&D Intersection Lights - Whelen 600 Series L.E.D Front Bumper Tail	2		x	

11 Sperti Drive, Edgewood, KY 41017
(859)331-0360
FAX: (859)331-0399

Fire Apparatus and Custom Fabricators

DESCRIPTION	QTY	PRICE	STD. OPT	INCLUDED OPT.
SUMMIT 100' PLATFORM		$822,300.00		
Lower Zone B&D Intersection Light Chrome Flange - Whelen 6E flange	2		x	
Lower Zone B&D Midship Warning Lights - Whelen 600 Series On Cab Above Wheel Well	2		x	
Lower Zone B&D Midship Warning Light Chrome Flange - Whelen 6Eflange	2		x	
Lower Zone B&D Midship Warning Lights - Whelen 600 Series Rear Wheel Well	2		x	
Lower Zone B&D Midship Warning Light Chrome Flange - Whelen 6Eflange	2		x	
Lower Zone B,D, & C Rear & Side Warning Light - Power Arc PA180 LED	2			
Upper Zone C Warning Lights - L31HAFN Drivers Side & L31HRFN LED Beacon	2			x
Electric Siren - Whelen WS-295	1		x	
Speaker - (1) CPI SH2015 Flush Mount	2		x	
Mechanical Siren - Delete	1			x
Compartment Lighting - TecNiq, Single Light Strip Each Door	18			x
Compartment Open Light - Red	1		x	
Hose Bed Light - Single Spot Light	1		x	
Ground Lighting Cab - Supplied by Chasis Manufacturer	1		x	
Ground Lighting Body - 8 TecNiq LED	1		x	
Battery Conditioner - Kussmaul Auto-Charge Super Kit w/ Auto-Eject	1			x
Battery Charging Receptacle - Kussmaul Auto Eject	1			x
Battery Charge Indicator - Delete	1		x	
Rear Mounted Camera - Mito Installed on Rear of Body	1			x
PAINTING / STRIPING				
Undercoating	1			x
Wheels - Factory Aluminum Finish	1		x	
PPG Two Stage Urthane - Body Job Color	1		x	
NFPA Perimeter - 6" White Reflective Cab	1		x	
NFPA Perimeter - 6" White Reflective Body	1		x	
NFPA Chevron 6' Red/Amber Reflective - Body, Rear Door, Hose Bed Door	1			x
MISC. EQUIPMENT				
Wheel Chocks - Zico SAC-44 w/ Mounting Brackets Installed	2			x
Wiring Schematics Supplied	1		x	
Service Manual & Parts List Supplied	1		x	
WARRANTIES				
Limited Warranty (1-Year)	1		x	

11 Sperti Drive, Edgewood, KY 41017
(859)331-0360
FAX: (859)331-0399

Fire Apparatus and Custom Fabricators

DESCRIPTION	QTY	PRICE	STD. OPT	INCLUDED OPT.
SUMMIT 100' PLATFORM		$822,300.00		
Paint Warranty (7-Year)	1		x	
Electrical Warranty (10-Year)	1		x	
Body Structural Warranty (20-Year)	1		x	
Cab Paint Warranty (10 - Year)	1		x	
Cab Structural Warranty (10 - Year/100,000 Miles)	1		x	
Engine Warranty (5 - Year/100,000 Miles)	1		x	
Transmission Warranty (5 - Year)	1		x	
SPARTAN 100' PLATFORM QUINT OPTIONS				
CHASSIS OPTIONS: Metro				
330 Hp Cummins ISL In Lieu Of The 450 Hp Cummins ISL		-$9,100.00		
380 Hp Cummins ISL In Lieu Of The 450 Hp Cummins ISL		-$8,300.00		
400 Hp Cummins ISL In Lieu Of The 450 Hp Cummins ISL		-$722.00		
68 Galon Fuel Tank in Lieu Of the 50 Gallon (will reduce rear compartment size)		$166.00		
100 Gallon Fuel Tank in Lieu Of the 50 Gallon (will reduce rear compartment size And Or Extend Body Length)		$594.00		
Officer Side V-Mux Vista Display		$1,838.00		
Front Wheel 17" Disc Brakes		$409.00		
Michelin Rear M&S Grip Tires In Lieu Of Highway Read		$250.00		
Aluminum Rims		$2,000.00		
Auto Tank Drains in Lieu Of Manual Drains		$121.00		
Heated Wet Tank Auto Ejector		$123.00		
Black Door Handles And No Scuff Plates		$700.00		
Electric Door Locks In Lieu of Manual		$1,102.00		
Power Windows In Lieu Of Manual Roll Up		$2,017.00		
Xtreme Duty Interior		$3,800.00		
CHASSIS OPTIONS: Gladiator				
Gladiator Cab In Lieu of Metro		$25,600.00		
500 HP Cummins ISX12 in lieu of ISL 450 HP Cummins		$33,500.00		
500 Hp Cummins ISX15 In Lieu Of The 450 Hp Cummins ISL		$37,400.00		
550 Hp Cummins ISX15 In Lieu Of The 450 Hp Cummins ISL		$40,100.00		
600 Hp Cummins ISX15 In Lieu Of The 450 Hp Cummins ISL		$44,600.00		
68 Galon Fuel Tank in Lieu Of the 50 Gallon (will reduce rear compartment size)		$166.00		
100 Gallon Fuel Tank in Lieu Of the 50 Gallon (will reduce rear compartment size And Or Extend Body Length)		$594.00		
Officer Side V-Mux Vista Display		$1,838.00		
Front Wheel 17" Disc Brakes		$409.00		
Michelin Rear Highway Tires In Lieu Of Highway Read		-$250.00		
Aluminum Rims		$2,000.00		

11 Sperti Drive, Edgewood, KY 41017
(859)331-0360
FAX: (859)331-0399

Fire Apparatus and Custom Fabricators

DESCRIPTION	QTY	PRICE	STD. OPT	INCLUDED OPT.
SUMMIT 100' PLATFORM		$822,300.00		
Auto Tank Drains in Lieu Of Manual Drains		$121.00		
Heated Wet Tank Auto Ejector		$123.00		
Chrome Door Handles With Scuff Plates		$700.00		
Electric Door Locks In Lieu of Manual		$1,102.00		
Power Windows In Lieu Of Manual Roll Up		$2,017.00		
Xtreme Duty Interior		$3,800.00		
CHASSIS UPFIT OPTIONS:				
Front Bumper Extension 18-24" With Gravel Shield		$3,700.00		
Front Bumper Extension Hose Well (No Discharge Provided) Requires 18-24" extension)		$550.00		
Vinyl Hose Tray Cover For Bumper Hose Tray		$150.00		
Treadplate Cover For Bumper Hose Tray With Latch		$295.00		
Trailer Hitch - 2" Class 4 receiver (includes 4 way plug)		$990.00		
Seven way trailer plug in lieu of 4 way		$70.00		
Stainless Steel Wheel Simulators		$890.00		
Air Horns - Bumper Mounted (Require Bumper Extension)		$960.00		
Automatic Tire Chains - Rudd		$2,981.00		
Automatic Tire Chains - On Spot		$2,705.00		
Lighted Bumper Poles (Rookie Rods)		$325.00		
BODY OPTIONS:				
SCBA Spare Bottle Storage - One (1) On Each Side Fore of Rear Wheel W/Side Cast Aluminum Access Doors		$560.00		
SCBA Spare Bottle Storage - Two (2) On Each Side Fore And Aft Rear Wheel W/Side Cast Aluminum Access Doors		$977.00		
Dual Bottle SCBA Storage In Lieu of Single (Pending on location; Pricing is each)		$150.00		
Rub Rails with Conspicuity Stripe		$670.00		
Folding Steps on Front Of Body (Pair)		$245.00		
Protective TreadPlate Overlay On Front of Compartments		$375.00		
STORAGE OPTIONS:				
Adjustable Shelf (12" Deep)		$180.00		
Adjustable Shelf (24" Deep)		$200.00		
Adjustable Slide Tray (24" Deep, 250lb rated)		$555.00		
Roll Out / Tilt Down Tray (24" Deep)		$725.00		
Heavy Slide Tray (600 LB Rated) - Floor Mounted		$650.00		
Heavy Slide Tray (1000 LB Rated) -Floor Mounted		$680.00		
Heavy Slide Tray For Rear Cargo Area (1000 LB Rated)		$1,580.00		
Roll Out Tool Board		$750.00		
Full Height Compartment Divider (Includes Unistrut)		$480.00		
Plastic Floor Tile compartment floors		$118.00		
Plastic Floor Tile installed on 12" deep shelf / Tray (each)		$60.00		

11 Sperti Drive, Edgewood, KY 41017
(859)331-0360
FAX: (859)331-0399

Fire Apparatus and Custom Fabricators

DESCRIPTION	QTY	PRICE	STD. OPT	INCLUDED OPT.
SUMMIT 100' PLATFORM		$822,300.00		
Plastic Floor Tile compartment floors		$118.00		
Plastic Floor Tile installed on 24" deep shelf / Tray (each)		$75.00		
PUMPS & PLUMBING:				
Hale Q FLow 1250 GPM Pump in Lieu of Hale Q Max1500 GPM (2 x2.5" LS, 2 x 2.5" RS, and 4" Waterway)		($3,300.00)		
Hale Q FLow 1750 GPM Pump in Lieu of Hale Q Max1500 GPM (2 x2.5" LS, 2 x 2.5" RS, LDD On RS and 4" Waterway)		$3,600.00		
Hale Q FLow 2000 GPM Pump in Lieu of Hale Q Max1500 GPM (2 x2.5" LS, 2 x 2.5" RS, LDD RS and 4" Waterway)		$3,600.00		
Waterous CSY 1250 GPM in Lieu Of The Hale Q Max 1500 GPM (2 x2.5" LS, 2 x 2.5" RS, and 4" Waterway)		$1,820.00		
Waterous CSY 1500 GPM in Lieu Of The Hale 1500 GPM		$2,290.00		
1.5" Trash Line Run to Front Bumper (Must Select Bumper Extension)		$1,100.00		
5" Front Intake (Vertical Through Bumper Extension With Air Operated Valve)		$6,820.00		
LDH Discharge on Right Side Pump Panel		$1,900.00		
Right Side 2.5"Suction		$1,325.00		
2.5" Rear Discharge - One (1) Right Hand		$2,100.00		
Hose Well In Pump House Running Board - Includes Velcro Strap		$750.00		
Foam Pro 1600 Includes Foam Cell In Tank (X-Lays Only)		$6,320.00		
Foam Pro 2001 - Single Foam System, Includes Foam Cell In Tank (X-Lays & Trash)		$7,900.00		
Foam Pro 2001 - Dual Foam System, Includes Two Foam Cells In Tank (X-Lays & Trash)		$9,800.00		
Foam Pro 2024 - Single Foam System, Includes One Foam Cell In Tank (X-Lays,Trash, One 2-1/2")		$9,720.00		
Foam Pro 2024 - Dual Foam System, Includes Two 20 Gallon Foam Cells In Tank (X-Lays,Trash, One 2-1/2")		$11,160.00		
Foam Pro Uplift System - Single		$2,350.00		
Foam Pro Uplift System - Dual		$4,580.00		
Pull Out Pump Operators Step		$575.00		
ELECTRIC:				
Kussmaul Battery Conditioner with Auto Eject In Lieu of Polarity Plug		$995.00		
Kussmaul Pump Plus, Battery Conditioner with Auto Eject In Lieu of Polarity Plug		$1,760.00		
Auto Air Eject For House Air Supply		$445.00		
Whelen 900 Series LED In Upper Zones B&D and C in lieu of Beacons		$420.00		

Fire Apparatus and Custom Fabricators

DESCRIPTION	QTY	PRICE	STD. OPT	INCLUDED OPT.
SUMMIT 100' PLATFORM		$822,300.00		
Single Strip LED Strip Compartment Lighting in lieu single LED		$750.00		
Dual Strip LED Strip Compartment Lighting in lieu single LED		$1,620.00		
LED Ground lights under front of body		$240.00		
LED Ground light under front bumper		$180.00		
LED Whelen 900 Scene lighting - One (1) on Each Side of Rear Compartment (2 total)		$740.00		
LED Whelen 900 Scene lighting - Two (2) on Upper Cab Side		$880.00		
LED FRC Spectra 900 Scene lighting - One (1) on Each Side of Rear Compartment (2 total)		$1,060.00		
LED FRC Spectra 900Scene lighting - Two (2) on Upper Cab Side		$1,090.00		
Cab Brow Light - Two (2) One Each Side, Over Cab - Whelen PFA2 Pioneer 7400 Lumen, L.E.D, 12 Volt		$3,180.00		
Cab Brow Light - Two (2) One Each Side, Over Cab - Whelen PFP2 Pioneer 16000 Lumen, L.E.D, 12 Volt		$4,026.00		
Cab Brow Light - Two (2) One Each Side, Over Cab - FRC FCA800-V08 8,000 Lumen, L.E.D, 12 Volt		$2,930.00		
Cab Brow Light - Two (2) One Each Side, Over Cab - FRC FCA800-V15 15,000 Lumen, L.E.D, 12 Volt		$3,192.00		
Cab Brow Light - Two (2) One Each Side, Over Cab - FRC SPA800-Q15 15,000 Lumen, L.E.D, 12 Volt		$3,618.00		
Cab Brow Light - Two (2) One Each Side, Over Cab - FRC SPA800-Q20 20,000 Lumen, L.E.D, 12 Volt		$4,006.00		
120/240 VOLT ELECTRICAL OPTIONS				
5000 W Gasoline Powered Honda Generator - Mounted on slide tray (Elec Start)		$4,200.00		
5000 W Gasoline Powered Generator - Mounted on slide tray (Elec Start)		$2,800.00		
3000 W Baldor Diesel Generator Mounted on slide tray (Elec Start)		$4,200.00		
5500 W Baldor Diesel Generator Mounted on slide tray (Elec Start)		$5,450.00		
120/240 Volt load center with up to 4 breakers & pigtail for genertaor (Gas or Diesel Generators Only)		$750.00		
Fuel Tap from chassis (Diesel)		$610.00		
6 KW Smart Power Hydraulic Generator With Load Center		$11,828.00		
8 KW Smart Power Hydraulic Generator With Load Center		$14,923.00		
10KW Smart Power Hydraulic Generator With Load Center		$15,972.00		
15KW Smart Power Hydraulic Generator With Load Center		$20,321.00		
20KW Smart Power Hydraulic Generator With Load Center		$22,206.00		
Remote Generator Activation From Pump Panel		$250.00		

Fire Apparatus and Custom Fabricators

DESCRIPTION	QTY	PRICE	STD. OPT	INCLUDED OPT.
SUMMIT 100' PLATFORM		$822,300.00		
Exterior Receptacles - Covered Duplex 5-20		$285.00		
Interior 120 Volt Receptacles - Cab, Duplex 5-15		$320.00		
Interior 120 Volt Receptacles - Body Compartrment, Duplex 5-15		$250.00		
220 Volt Receptacle - Body Compartment		$295.00		
Electric Cord Reel - 200' 10/3 Black Cable		$2,180.00		
Electric Cord - 200' 10/3 Yellow Cord In Lieu Of The Black		$180.00		
Electric Cord Ball Stop		$25.00		
Electric Junction Box - Akron With 4 L5-20 Receptacles		$425.00		
Electric Junction Box - Circle D With 4 L5-20 Receptacles		$545.00		
Fair Lead, Cord Reel - Hannay 4 Way		$180.00		
Sumit Extendible or Swing Out Fair Lead		$340.00		
Junction Box Mounting Bracket - Aluminum		$150.00		
Side Mount Push-Up Lights - Akron ELNB-750-Pod 120Volt, 750 Watt Lights (Per Pair)		$1,665.00		
Side Mount Push Up Lights - FRC FCA530-S75 120 Volt 750 Watt Lights (Per Pair)		$1,632.00		
Side Mount Push Up Lights - FRC FCA530-M10 1000 Watt Lights (Per Pair)		$1,745.00		
Side Mount Push Up Lights - FRC FCA530-M12 240 Volt, 1000 Watt Lights (Per Pair)		$1,832.00		
Side Mount Push Up Lights - FRC OPA530-S75 120 Volt 750 Watt Lights (Per Pair)		$1,685.00		
Side Mount Push Up Lights - FRC OPA530-M10 1000 Watt Lights (Per Pair)		$1,847.00		
Side Mount Push Up Lights - FRC OPA530-M12 240 Volt, 1000 Watt Lights (Per Pair)		$1,910.00		
Light Tower - Wil-Burt NS3.0-2700 Profiler Mounted On Cab Roof		$13,887.00		
Light Tower - Wil-Burt NS3.0-3000 Profiler Mounted On Cab Roof		$14,244.00		
Light Tower - Wil-Burt NS3.0-4500 Profiler Mounted On Cab Roof		$15,870.00		
Light Tower Fairing - Aluminum, Cab Mounted, Painted to Match		$1,780.00		
Light Tower Fairing - Treadplate Aluminum, Cab Mounted		$1,300.00		
PAINT:				
Two Tone Chassis - Custom Cab MFD		$3,550.00		
Painting Jambs in addition to paint (4 Door)		$1,200.00		
Two Tone Body		$2,550.00		
Body Undercoating		$415.00		
Painted Steel Wheels to Job Color		$460.00		

11 Sperti Drive, Edgewood, KY 41017
(859)331-0360
FAX: (859)331-0399

Fire Apparatus and Custom Fabricators

DESCRIPTION	QTY	PRICE	STD. OPT	INCLUDED OPT.
SUMMIT 100' PLATFORM		$822,300.00		
STRIPING & LETTERING:				
NFPA Perimeter Stripe 4"		$642.00		
1- 4 -1 NFPA Perimeter Stripe 4" with 1" stripe above and below		$792.00		
Z pattern in stripe		$130.00		
Sixty (60) 3" Reflective Lettering		$705.00		

11 Sperti Drive, Edgewood, KY 41017
(859)331-0360
FAX: (859)331-0399

SUMMIT
Fire Apparatus and Custom Fabricators

DESCRIPTION	QTY	PRICE	STD. OPT.	INCLUDED OPT.
REFURBISHMENT PRICING GUIDE				
The following prices are an established to provide a pricing guide for refurbishment of your aging Pumper / Engines no matter the mnaufacturer of the apparatus. These prices will help you determine if the viablity of refurbishment is right for you . With over 50 years of experinece in refurbishment and manufacturing, a Summit Representative will be able to guide you through the pricing and options available to you.				
**** It should be noted that most of these prices are based on ideal conditions and not representative of every apparatus. A consultation with one of our representatives will be requried to create an exact cost**				
PUMP OVERHAUL This includes all makes of single stage fire pumps ranging in sizes from 1,000 GPM to 2,000 GPM. The work to be performed would be complete disassembly of the pumps center section and replacement of the shaft, wear rings, impeller and gasket kit. The pump then would be tested to the latest NFPA standard. NOTE: This price does not include special conditions such as a pump with an inordinate amount of obstructions.		$10,605.00		
PUMP SEAL This includes the replacement of the fire pumps mechanical seal on any make pump from 1,000 GPM to 2,000 GPM. NOTE: This does not include replacing the pump shaft or impellers and any special conditions such as a pump with an inordinate amount of obstructions.		$4,242.00		
VALVE OVERHAUL This is a price per valve to install the manufacturer's standard kit. In many cases this does not include a new ball.		$635.00		
PUMP INSPECTION This includes a full NFPA pump test and written report. It generally will include a diagnosis of anything defective in the pump with an estimate of cost to repair. This price is good for testing at our facility only.		$530.00		

11 Sperti Drive, Edgewood, KY 41017
(859)331-0360
FAX: (859)331-0399

Fire Apparatus and Custom Fabricators

DESCRIPTION	QTY	PRICE	STD. OPT.	INCLUDED OPT.
REFURBISHMENT PRICING GUIDE				
SCBA BRACKETS This allows you to change any standard SCBA bracket to a newer design, Zico Roll-Loc bracket with standard pull release.		$626.00		
FRONT RESCUE BUMPERS This price includes extending the front frame ends. Revising the existing bumper, creating 3 compartments, 1 for reels, 1 for tool storage and 1 for a 1-3/4 inch discharge line. This also includes 2 new hydraulic reels but no hose. This does not include connecting the hydraulic reels or installing the trash line plumbing.		$15,905.00		
CORROSION To repair damaged paint areas caused by electroloysis or rust, this cost covers about a 2 foot square area. This covers sandblasting away damaged areas, refinishing and utilizing corrosion preventative methods for reassembly.		$2,174.00		
CORROSION: PERFORATED This covers areas where the corrosion has actually perforated the metal. This covers cutting away affected areas and rewelding in new and utilzing corrosion preventative methods for reassembly. This price covers a 10 x 20 inch area and refinishing the affected area.		$3,070.00		
RE-CHASSIS PUMPER This covers the remounting of an existing body and pump onto a new chassis. There are certain bodies that cannot be moved over. Some require special body supports to be made in order to be remounted. Power Train components are also a consideration along with drive line considerations. This price does not include repainting or any new lights.		$20,944.00		
RE-CHASSIS RESCUE Much of the same problems exist with a rescue re-chassis as a pumper. The Power Train is usually not a problem with this type of re-chassis.		$19,322.00		
LED LIGHTING UPGRADE: PUMPER To upgrade a standard pump from strobes or incandesant lights to Whelen LED. This covers an NFPA light bar, 2 pedestal lights and 8 surface mounted lights. This price is based on reusing existing wiring and switching.		$8,040.00		

SUMMIT
Fire Apparatus and Custom Fabricators

DESCRIPTION	QTY	PRICE	STD. OPT.	INCLUDED OPT.
REFURBISHMENT PRICING GUIDE				
REPAINT: PUMPER This includes the removal and reinstallation of all bolt-on items, but not necessarily tread plate or windshields. It does include application of electrlysis protection.		$30,457.00		
GROUND LIGHTING This includes the installation of incandesant under body lighting per NFPA at all stepping locations. LED upgrade is $310.		$1,060.00		
BOOSTER TANKS We have broken down the booster tanks into 2 types and 2 different makes or composites. All of the tanks carry the same lifetime warranty. These prices include the removal and reinstallation of a standard pumper install, additional obstructions or special conditions warrant additional costs. This pricing includes as standard: (1) Fill tower with removable screen and hinged cover. (1) Sump with anti-swirl plate and cleanout/drain fitting. (1) Schedule 40 vent/overflow pipe - 4" pipe standard. (1) Tank fill fitting up to 3" NPT. (1) Tank suction fitting up to 4" NPT.				
Plastic T-Type 500 Gallon		$7,712.00		
Plastic T-Type 750 Gallon		$8,640.00		
Plastic T-Type 1,000 Gallon		$9,544.00		
Fiberglass T-Type 500 Gallon		$8,020.00		
Fiberglass T-Type 750 Gallon		$10,190.00		
Fiberglass T-Type 1,000 Gallon		$10,407.00		
Plastic Rectangle 500 Gallon		$6,927.00		
Plastic Rectangle 750 Gallon		$8,244.00		
Plastic Rectangle 1,000 Gallon		$9,145.00		
Fiberglass Rectangle 500 Gallon		$6,522.00		
Fiberglass Rectangle 750 Gallon		$7,983.00		
Fiberglass Rectangle 1,000 Gallon		$8,882.00		
This pricing does not include converting from a metal tank to a composite. This requires construction and installation of a cradle with cushions. These typically cost about: There are many options obtainable on booster tanks, after discovery of what you have we can price accordingly.		$1,800.00		

11 Sperti Drive, Edgewood, KY 41017
(859)331-0360
FAX: (859)331-0399

SUMMIT
Fire Apparatus and Custom Fabricators

DESCRIPTION	QTY	PRICE	STD. OPT.	INCLUDED OPT.
REFURBISHMENT PRICING GUIDE				
ICC LIGHTS To replace all ICC lights including markers and tail lights with new LED type.		$4,051.00		
ALUMINUM TREAD PLATE EPLACEMENT PUMPER To replace the aluminum tread plate on an average pumper. This includes utilizing NFPA tread plate where required.		$11,135.00		
WHEEL WELL CYLINDER STORAGE To install wheel well cylinder storage in the well corners. This includes 4 single cylinders.		$3,350.00		
AUTOMATIC TIRE CHAINS To install air operated dual wheel tire chains.		$3,180.00		
AIR HORNS To install Grover Stuttertone emergency air horns with floor mount controls. Note: This does not include extending bumpers, but rather mounting on the hood.		$1,155.00		
LETTERING / STRIPING / CHEVRONS To install 60 3 inch Gold Reflective letters, a 4 inch wide NFPA stripe around the truck and Chevron striping on a smooth rear panel.		$4,215.00		
RE-UPHOLSTER CUSHIONS This includes the re-upholstering of standard seating cushions for fire trucks. The covering is of a heavy duty vinyl.		$477 Each		
To recover/re-upholster a standard flat cushion:		$200 Each		
HOSE BED COVER This includes a heavy duty vinyl hose bed cover with elastic style hold downs and a snap down rear.		$950.00		
To install letters or numbers on the rear flap:		$200.00		

11 Sperti Drive, Edgewood, KY 41017
(859)331-0360
FAX: (859)331-0399

Fire Apparatus and Custom Fabricators

DESCRIPTION	QTY	PRICE	STD. OPT.	INCLUDED OPT.
REFURBISHMENT PRICING GUIDE				
LIGHT TOWER The following includes installation of a variety of Will-Burt brand light towers. These prices include installation on custom cab roofs. It includes the reinforcement of the roofs to support the tower. It is possible to install towers in a variety of other locations on trucks, but too many variations to note here. Pricing can be obtained by contacting the factory.				
Night Scan Chief 1.8 with 2 FRC LED 12V lights This model raises to 6 feet.		$12,285.00		
Night Scan Power Lite NS4.5 with 4 1500 Watt 240V FRC fixtures, This model raises to 15 feet		$18,068.00		
HYDRAULIC GENERATORS The following covers installation of a Smart Power brand hydraulic generator. These prices can fluctuate with obstructions. The prices do not include the removal of any existing generator or the installation of a load center breaker box.				
8 KW		$15,728.00		
10 KW		$17,231.00		
15 KW		$21,882.00		

11 Sperti Drive, Edgewood, KY 41017
(859)331-0360
FAX: (859)331-0399