Fire Apparatus Quotation for:
STATE OF OHIO TERM SCHEDULE

Quotation Number: 70720 Rev: 15

Unit Description: PMPR-COMM

Quote Description: Pumper, Commercial Chassis, International 4400 4-door

Salescode	Extended Description	Qty
TESTING COMPLIANCE STANDARD		
1001-0015	The E-ONE supplied components of the vehicle shall meet the requirements of NFPA 1901, 2009 edition.	1
CHASSIS PREP		
1020-0011	Comm Chas Prep E-1 Supp-Non FL.	1
FRAME ASSEMBLY		
1250-0011	Rear underbody support frame.	1
AXLE OPTIONS		
1025-0042	Front axle for commercial chassis 12,000 lb. rating.	1
1025-0046	Rear axle for commercial chassis 23,000lb rating	1
TIRE OPTIONS		
1060-0117	RWC AirGuard LED tire pressure monitoring valve stem caps (6) for single rear axle applications.	1
AIR SYSTEM OPTIONS		
1110-0010-277	Air inlet. To charge brake system. Commercial chassis only. Location: driver's door step area.	1
1110-0065	Dual Grover hood mounted air horns with driver and officer foot switches to be supplied and installed by Navistar.	1
ENGINES & TRANSMISSIONS		
1200-0126	Chassis speed to be electronic limited and not to exceed a maximum of 68 MPH. Note: Speed rating may be lower based on OEM tire ratings/top speed limitations provided on chassis.	1
1200-0285	International N9 engine, 330 HP SCR.	1
CHASSIS OPTIONS		

1680-0011	Tow eyes rear below body, painted.	1
1680-0078	Tow hooks front OEM. Not available with extended E-ONE installed front bumper. Tow hooks are OEM supplied with chassis.	1
1680-0114	Diamond plate trim package for a (4) door International. Includes a full length driver side and a (2) piece officer side trim that will utilize pieces already supplied by the OEM.	1
1680-0234-R02-P0	The fuel tank to be 50 gallons and located to the right hand side of cab.	1
1680-0235-R01	The batteries to be located under left hand side of cab.	1
CAB MODEL		
1500-0011	Four door Navistar 4400 4x2.	1
CAB BADGE PACKAGE		
1610-0000	Cab and body to have applicable E-ONE logos.	1
CAB DOOR OPTIONS		
1550-0059-000-G6	Reflective Red/Lemon Yellow printed striping positioned in the "A" formation located on the cab door panels.	1
MISC EXTERIOR CAB OPTIONS		
1675-0007	Diesel fuel only label.	1
SEATS		
1510-0151	Universal air pack bottle bracket installed (EA).	4
1685-0032	Seating capacity tag of five occupants.	1
CAB ELECTRICAL OPTIONS		
1750-0024-277-04	Auto-Eject receptacle inlet 20 amp located driver's door step area with a Yellow cover.	1
1750-0343	Battery charger E-ONE LPC 20. 120 volt inlet, 20 amp output.	1
BODY COMPT LEFT SIDE		
3100-0112	Driver side body with full height 36" wide forward and 50" wide rearward enhanced extended compartmentation. Includes (1) 56" wide compartment over the wheel well.	1
BODY COMPT RIGHT SIDE		
3120-0013	Officer half side body with 36" wide forward and 50" wide rearward enhanced extended compartmentation. Includes adjustable ladder tracks and ladder brackets.	1
BODY COMPT REAR		
3110-0005	Full Height Rear Compartment. Includes smooth plate panels.	1
3110-0035	Upper rear compartment depth to be approximately 25" deep.	1

3340-0083	Bolt-on diamond plate tailboard (full width of rear compartment). Includes the enhanced extended side compartment frame work with diamond plate compartment tops, (1) officer side lower area folding step. Driver side includes (1) upper hosebed mounted handrail (as applicable) and handrails- (2) vertical on trailing edge of body and horizontal mounted handrail(s) below hosebed.	1
DOORS		
3300-0017-004	Door roll up short (up to 45") with satin finish ROM. Location(s): L2.	1
3300-0017-015	Door roll up short (up to 45") with satin finish ROM. Location(s): R1.	1
3300-0017-016	Door roll up short (up to 45") with satin finish ROM. Location(s): R2.	1
3300-0019-003	Door roll up tall (greater than 45") with satin finish ROM. Location(s): L1.	1
3300-0019-005	Door roll up tall (greater than 45") with satin finish ROM. Location(s): L3.	1
3300-0019-027	Door roll up tall (greater than 45") with satin finish ROM. Location(s): B1.	1
SHELVES		
3370-0025-099	Permanent shelf. Locate in L1 at offset (above extrusion if applicable).	1
3370-0025-100	Permanent shelf. Locate in L3 at offset (above extrusion if applicable).	1
COVERS		
3305-0007-000-02	Vinyl Red hose bed cover with attached rear flap(s).	1
3305-0008-000-02	Vinyl Red crosslay cover with attached side flaps.	1
PUMP MODULE		
3130-0167	Pump module to be 76" wide (side to side). Includes upper, lower, crosswalk, speedlay and tranverse module(s) if applicable.	1
3130-0523	Side mount pump module. Extruded aluminum with runningboards.	1
3130-0532	Pump panel opening is 39" wide. Pumper / tanker only.	1
3130-0539	Pump module height is 75". Pumper / tanker only.	1
PUMP PANELS		
3134-0006	The single gauge panel on the driver's side of the side mount module is to be hinged downward. Includes two (2) cable hold opens, and latches.	1
3134-0016	Stainless steel driver and officer side pump panels.	1
3134-0143	Officer side pump panel to be vertical hinged on forward extrusion. Panel to be (3) pieces with upper (2) panels secured in the closed position with push button latches. Upper panel to be held open with gas shock.	1
MISC PUMP PANEL OPTIONS		
4460-0003	Pump panel tags color coded per NFPA compliance.	1
PUMP MODULE OPTIONS		
3136-0058	E-ONE logo mounted one each side on pump module/preconnect panels. Logos to be sized as applicable to available space on panels.	1

3136-0138	Pump module storage pan.	1
3136-0141	Crosslay double 4.25" wide single stack to hold up to 200' of 2.0" DJ (each).	1
WATER TANK		
4010-0099	Fill tower(s) to be located offset to officer side of water tank.	1
4010-0178	1030 Gallon "T" Water Tank. UPF Poly III color fill towers. Note: Any foam cell(s) and/or storage options through the tank will reduce the overall water capacity.	1
TANK PLUMBING		
4450-0010	2" tank fill Akron manual valve.	1
4450-0119	3" tank to pump Akron manual valve w/4" tank connection.	1
LADDER STORAGE / RACKS		
3365-0025-515	Attic ladder mounting brackets (PR). Locate officer side compartment top.	1
3365-0028	Hard Suction Storage Rack. Driver side compartment top. Includes spring hold downs and scuff plates behind spring mounts (as applicable).	1
3365-0031	Hard Suction Storage Rack. Officer side in adjustable track above ladders (if applicable). Includes spring hold downs and scuff plates.	1
3365-0034-515	(2) aluminum pike pole storage tubes. Locate officer side compartment top.	1
3365-0049	Brand of ladders capable of being carried on unit to be Alco-Lite.	1
3365-0086-B99	The pike pole(s) capable of being stored are to be the following length: (2) 10' pike poles.	1
3365-0087-C57	The length of ladders capable of being stored shall be the following: 24' 2-section and 14' roof ladder.	1
3365-0168	Pike pole tube secondary retaining pin(s) with cable. Locate on end of pike pole tube(s).	1
HANDRAILS / STEPS		
3330-0103	Dual lighted LED folding steps rear NFPA. Includes folding steps on driver side (staggered stepped as applicable with tailboard depth) for NFPA hosebed access and handrail mounted on driver side upper hosebed side (as applicable).	1
3330-0105-060	Dual lighted LED folding step. Location: officer side front compartment face. Each location requires a minimum of (1) handrail per NFPA.	1
3330-0105-062	Dual lighted LED folding step. Location: driver side front compartment face. Each location requires a minimum of (1) handrail per NFPA.	3
MISC BODY OPTIONS		
3090-0002	OAH. Unit has no overall height restrictions.	1
3090-0004	OAL. Unit has no overall length restrictions.	1
3090-0007	The hose bed is to have NFPA capacity.	1
3340-0004	Hosebed above the booster tank. Includes forward hosebed and tower(s) cover plate work (as applicable). Hosebed adjustable divider extrusion rearward of the furthest tower is to run full width of the hosebed (as is practical with other hosebed mounted	1

	equipment).	
3340-0035	Divider Long. To run full length of hose bed (front to rear).	1
3340-0074	Body mainframe and hosebed side assemblies for a 85" high body.	1
3340-0088	Smooth plate single axle wheel well painted job color. Includes bolt-on composite wheel well liners.	1
3340-0093	Mud flaps, rear, black with E-ONE logo.	1
3340-0110	The rear of each hose bed divider to have a hand hold cut-out(s).	1
3340-0145	Rub rail for the body and pump area module(s).	1
3340-0680	Body mainframe layout line to be 23". Includes body and all applicable modules.	1
SCBA BOTTLE STORAGE		
3320-0020	SCBA Bottle Storage. (4) Fire Shopp SCBA bottle storage with hinged doors with push button latches. (2) officer side and (2) driver side in wheel well area.	1
3320-0100	Strap(s), loop style to retain SCBA bottle(s). Locate one per bottle in each exterior storage compartment.	4
PUMPS		
4005-0013	Hale QFLO 750-1250 GPM pump, single stage.	1
4005-0030	Rating 1250 GPM	1
PUMP CERTIFICATION		
4475-0000	Pump certification 750-2250 GPM	1
PUMP OPTIONS		
4015-0008	Zinc anodes for Hale pump (PR), (1) discharge side and (1) intake side.	1
4015-0053-198	Steamers to be Flush + 1". Location: driver's side.	1
4015-0053-199	Steamers to be Flush + 1". Location: officer's side.	1
4015-0098	Manual operated master pump drain. The master drain shall be clearly marked and placed in accessible location on pump panel.	1
4015-0210	Pump cooler with Innovative Control 1/4 turn valve with "T" handle and label.	1
INTAKES		
4440-0005	2.5" Left Intake Akron Manual Valve.	1
INTAKE OPTIONS		
4445-0048	Intake pressure relief valve, Task Force Tips.	1
DISCHARGES AND PRECONNECTS		
4415-0012-654	1.5" crosslay with Akron manual valve. Location: crosslay 1 & 2.	2
4415-0014-581	2.5" Left Pump Panel Discharge Akron Manual Valve. Location: left side discharge 1.	1
4415-0014-582	2.5" Left Pump Panel Discharge Akron Manual Valve. Location: left side discharge 2.	1

4415-0022-350	2.5" Left Rear Discharge Akron Manual Valve. Location: left rear discharge.	1
4415-0041	3" Deck Gun Discharge, Akron manual valve.	1
4415-0054-583	4" Right Pump Panel Discharge with 3" Akron Manual Valve (Waterous pumps noted location to be forward lower port). Location: right side discharge 1.	1
4417-0106-L65	Deck gun piping to be positioned centered in deck gun channel.	1
DISCHARGE OPTIONS		
4417-0175	Innovative Controls push/pull valve controls with locking T handles.	1
4417-0177	Innovative Controls 3/4" bleeder/drain valve include 1/4 turn T-handle.	7
4417-0185	Innovative Controls discharge and intake bezels with integral color code and verbiage for side mount pump panel.	1
PRESSURE GOVERNORS		
4465-0011	Class 1 TPG pressure governor. Includes, water, oil, volt and tachometer.	1
GAUGES		
4435-0001	Class 1 Intelli-Tank water tank level gauge. On pump panel.	1
4435-0246	2.5" Innovative Controls stainless steel case pressure gauge (0-400) with color code bezel.	7
4435-0247	4" Innovative Controls stainless steel case master pressure gauges with bezel. Intake 30-0-400, and discharge 0-400.	1
ELECTRICAL SYSTEMS		
5010-0014-E12	Vehicle data recorder for commercial cab - 2009 NFPA compliant. Includes occupant detection with display. Display location: outboard on driver's side overhead console.	1
5010-0036	V-MUX Electrical system for pumper / tanker / rescue.	1
5010-0059-339	VFD Text display for V-MUX electrical system. Location: center of dash.	1
LIGHT BARS		
5300-0267	Light bar Whelen Justice model JE2NFPA 56" LED with clear lenses and MKEZ7 mounts. N/A on Vista roofs with front facing windows. Includes (4) red corner facing LIN6 LED lights, (6) forward facing CON3 Linear LED lights; (4) red, (2) white. Location: Centered on the front cab roof.	1
WARNING LIGHT PACKAGES		
5550-0128-535	Whelen Super LED lower level warning light package. Includes (6) red 600 LED light heads, (2) red LIN3 lights and (2) red 500 LED light heads w/chrome flanges. Locate side facing lights: at forward most position, centered in rear wheel well, and side facing at rear of body in rubrail if equipped.	1
WARNING LIGHTS		
5600-0078-479-06	Whelen Super LED beacon (PR) model L31H with Red domes. Location rear upper	1

	body on aerial style brackets.	
5600-0105-170	Hazard (door ajar) light 2" LED. Location: center overhead.	1
SIRENS		
5500-0009	Federal PA300 electronic siren recessed mounted.	1
5500-0024-170	The electronic siren control is to be located on the center overhead.	1
SPEAKERS		
5510-0028	Speaker Federal Dynamax ES100. Located officer's side behind tow hook. Navistar 4400 chassis only.	1
DOT LIGHTING		
5150-0007	Whelen 600 series LED vertical mount tail lights. Includes LED stop/tail, arrow turn and halogen back-up lights with vertical Cast 3 housing and weatherproof connectors.	1
5150-0017	License plate light LED with chrome housing located at the rear of the body.	1
5150-0022	Marker light LED body package. Commercial pumper bodies only.	1
LIGHTS - COMPARTMENT, STEP & GROUND		
5380-0189	Compartment light package Amdor Luma-Bar LED for small bodies. Includes one light per compartment (two if transverse).	1
5380-0200	Ground light package EON LED - small.	1
LIGHTS - DECK AND SCENE		
5390-0058-395	Deck Lights - Truck-Lite LED model 81380 (PR). Location: rear body/beavertail area on the trailing edge up high.	1
5390-0076	Hose bed light Truck-Lite LED model 81380. Locate at front of hose bed. Switched with work light switch in cab.	1
5390-0102	Crosslay light Truck-Lite LED model 81380. Locate to rear of crosslay (SM) and forward of crosslay (TM as applicable). Switched with work light switch in cab.	1
LIGHTS - NON-WARNING		
5400-0003	Engine compartment light (EA).	1
5400-0010	Incandescent pump compartment light (EA).	1
5400-0031	Pair of Cab Dome Large Lights mounted driver and officer side front. N/A on E-One Chassis. Required on Comm Chassis.	1
5400-0032	Pair of Cab Dome Large Lights mounted driver and officer side Rear. N/A on E-One Chassis or two door commercial chassis. Required on Comm Chassis.	1
5400-0039	Spotlight Specialty 2150 hand held located on officer's side of cab dash - hardwired.	1
5400-0092	Weldon pump panel LED light package with (3) lights per side pump panel. Pump panels over 45" may require additional lights. Side mount only.	1
MISC ELECTRICAL		

5110-0017	Back-up alarm 97 dB.	1
LIGHTS - QUARTZ		
5450-0290-407	Light Whelen Pioneer model PFP1 12V with internal top raise pole mount. Includes switch accessible to driver. Location: driver side of pump module forward area.	1
5450-0290-408	Light Whelen Pioneer model PFP1 12V with internal top raise pole mount. Includes switch accessible to driver. Location: officer side of pump module forward area.	1
ELBOWS		
7400-0004	Elbow 30 degree chrome swivel w/2.5"FNST x 2.5"MNST.	3
HAND TOOLS		
7600-0005	Pike Pole Fiberglass 6'.	1
7600-0007	Pike Pole Fiberglass 10'.	1
HOSE / NOZZLES		
7700-0004	Hard suction hose 6" X 10' with Pyrolite couplings.	2
GROUND LADDERS		
7800-0007	Alco-Lite PRL-14' roof ladder.	1
7800-0016	Alco-Lite PEL-24' 2-section extension ladder.	1
7800-0032	Alco-Lite FL-10, 10' folding ladder w/safety shoes.	1
MISC LOOSE EQUIPMENT		
7900-0010	Chrome Barrel Strainer 6" NST.	1
7900-0014	DOT Required Drive Away Kit - Kit includes three (3) triangular warning reflectors with carrying case. This kit is for the end user and is to remain with the truck.	1
EXTERIOR PAINT		
8100-0089	All applicable pump/pre-connect application modules are to have a sanded finish (not painted job color). Includes upper and lower pump modules, crosswalk module and/or speedlay/pre-connect module (as applicable). Rear mounted body/pump module to be painted job color.	1
8100-0116	Rear body surface to have a sanded finish (not painted job color). Includes hinged doors that do not have discrete sales codes and removable panels.	1
8100-0182-000-17	Paint Body - Small - For Pumpers, Rear Mounts, S/A Tankers/Wetsides and Rescues. Sikkens paint. Color: FLNA3225E-1 Red.	1
8100-0442-000-17	International cab paint (by chassis OEM). Paint to match FLNA3225E-1 Red.	1
STRIPING		
8300-0002-859-12	NFPA Scotchlite Stripe - 4" wide and straight on front/sides of cab and sides/rear of body. Color: White. Location: bottom of stripe flush with bottom of cab and straight	1

	back.		
8300-0042	White rubrail scotchlite insert.	1	
8300-0084-000-72	Chevron "A" style 6" printed sheet Scotchlite striping full width on rear of body. Includes rear facing extrusions, panels and doors. Colors to be Yellow/Red.	1	
WARRANTY / STANDARD & EXTENDED			
9100-0000	Standard 1 Year Warranty.	1	
9100-0004	10 Year/100,000 Mile Structural Warranty for Alum Cab / Body - Statement of Warranty.	1	
9100-0005	10 Year Stainless Steel Plumbing Warranty - Statement of Warranty.	1	
9100-0019	10 Year Limited Paint and Perforation Warranty - For Sikkens Paint.	1	
SUPPORT, DELIVERY, INSPECTIONS AND MANUALS			
9300-0009	Manuals, Operator and Service CD-ROM.	1	
9300-0316	Fire Apparatus Safety Guide published by FAMA, latest edition.	1	
PRICE	2016 E-ONE PUMPER - INTERNATIONAL 4-DR CHASSIS		$243,560

STATE OF OHIO TERM SCHEDULE

4200 SURFACE RD
COLUMBUS, OH 43228

Quote No: 70720

3/13/2015

Quote Rev:15 Drawing Rev:3

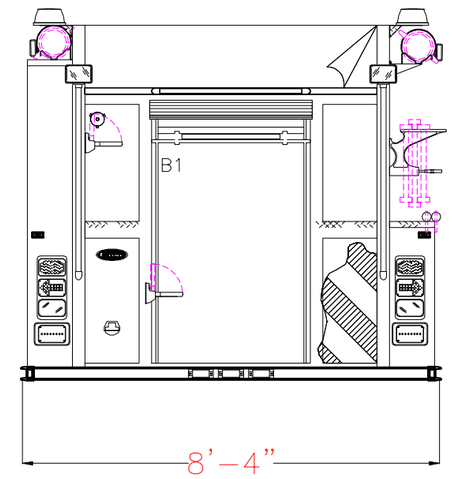

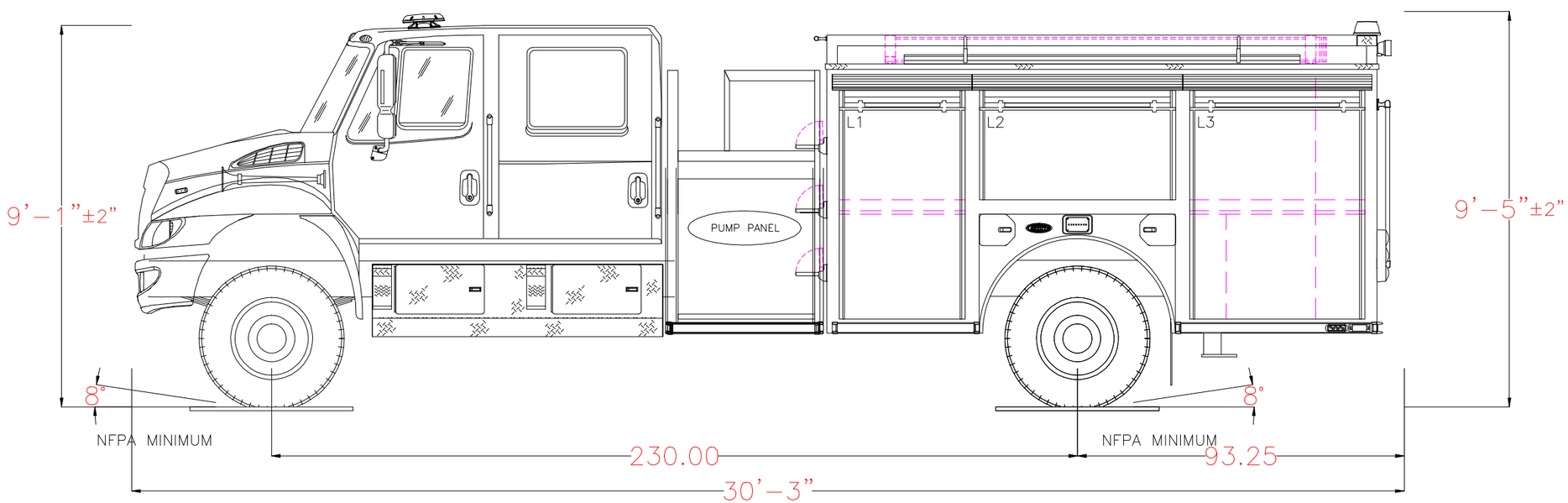

POWERED BY EZDRAW

Notice: This drawing provides a GENERAL REPRESENTATION of the vehicle configuration and should be used for evaluation purposes. The respective dimensions shown,including overall height and length, are estimates and may vary due to manufacturing processes. All other items such as lighting and fixtures, plumbing, compartmentation, and other generally assembled details are shown for REFERENCE ONLY and may not be a direct reflection of the final truck configuration. In ALL situations where this drawing may conflict with the specifications, THE SPECIFICATIONS, AS REFLECTED IN THE APPROVED SHOP ORDER, SHALL PREVAIL. Unless otherwise specified, the proposed apparatus will be manufactured to the latest NFPA recommendations as well as other applicable federally regulated safety regulations. E-One reserves the right to engineer and incorporate design improvements and changes without notice, while adhering to the intent of the specification.

1250 GPM HALE QFLOPUMP 0 TOTAL VOLUME 0 TOTAL FOAM	HOSE LOADS :

	OPENING		INTERIOR DIMENSIONS				
COMPT.	WIDTH	HEIGHT	WIDTH	LOWER HEIGHT	LOWER DEPTH	UPPER HEIGHT	UPPER DEPTH
L1	34	59.75	36	30	26	26.75	12
L2	54	25.75	56	N/A	N/A	26.75	12
L3	48	59.75	50	30	24	26.75	12
R1	34	21	36	30	26	N/A	N/A
R2	48	21	50	30	26	N/A	N/A
B1	36	45	38	30	26	24	14

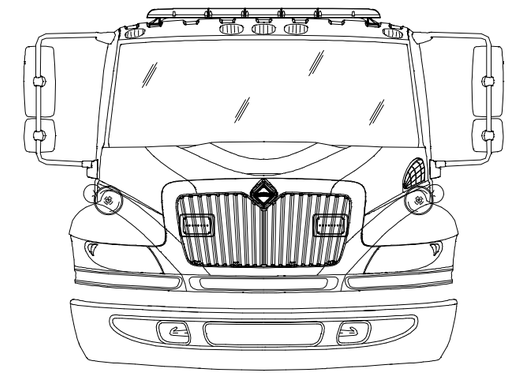

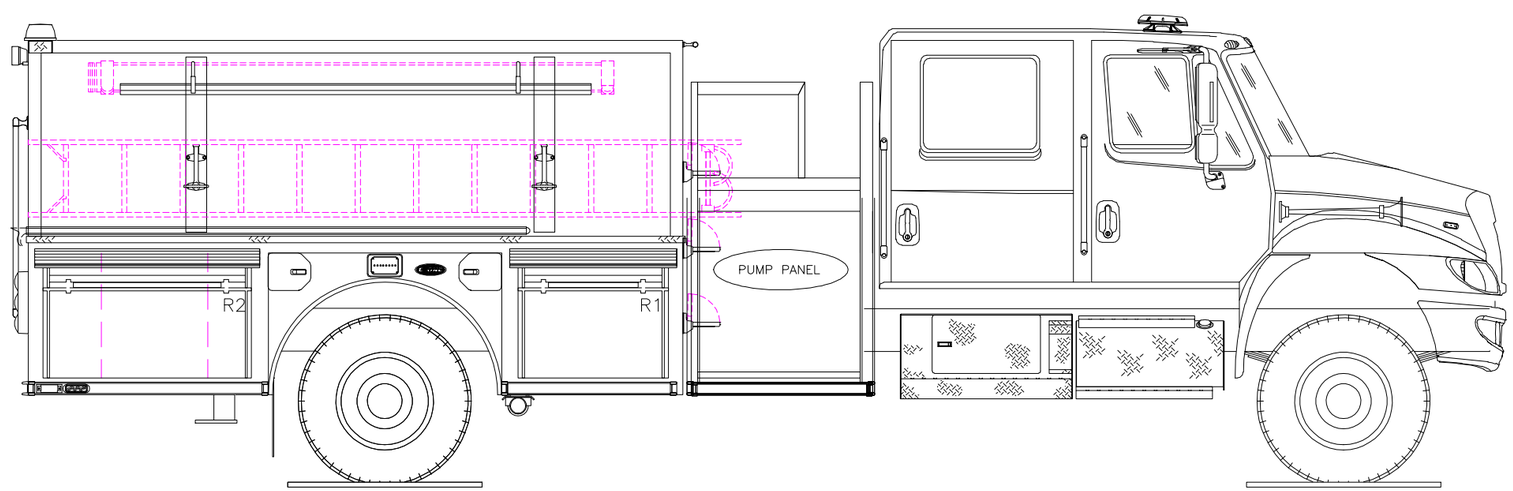

POWERED BY EZDRAW

Fire Apparatus Quotation for:
STATE OF OHIO TERM SCHEDULE

Quotation Number: 70545 Rev: 21

Unit Description: PMPR-COMM

Quote Description: Rescue Pumper, Comm Chassis, International 4400 4-dr

Salescode	Extended Description	Qty
TESTING COMPLIANCE STANDARD		
1001-0015	The E-ONE supplied components of the vehicle shall meet the requirements of NFPA 1901, 2009 edition.	1
CHASSIS PREP		
1020-0011	Comm Chas Prep E-1 Supp-Non FL.	1
FRAME ASSEMBLY		
1250-0011	Rear underbody support frame.	1
AXLE OPTIONS		
1025-0042	Front axle for commercial chassis 12,000 lb. rating.	1
1025-0053	Rear axle for commercial chassis 24,000lb rating	1
TIRE OPTIONS		
1060-0117	RWC AirGuard LED tire pressure monitoring valve stem caps (6) for single rear axle applications.	1
AIR SYSTEM OPTIONS		
1110-0010-277	Air inlet. To charge brake system. Commercial chassis only. Location: driver's door step area.	1
1110-0065	Dual Grover hood mounted air horns with driver and officer foot switches to be supplied and installed by Navistar.	1
ENGINES & TRANSMISSIONS		
1200-0126	Chassis speed to be electronic limited and not to exceed a maximum of 68 MPH. Note: Speed rating may be lower based on OEM tire ratings/top speed limitations provided on chassis.	1
1200-0285	International N9 engine, 330 HP SCR.	1
CHASSIS OPTIONS		

1680-0011	Tow eyes rear below body, painted.	1
1680-0078	Tow hooks front OEM. Not available with extended E-ONE installed front bumper. Tow hooks are OEM supplied with chassis.	1
1680-0114	Diamond plate trim package for a (4) door International. Includes a full length driver side and a (2) piece officer side trim that will utilize pieces already supplied by the OEM.	1
1680-0234-R02-P0	The fuel tank to be 50 gallons and located to the right hand side of cab.	1
1680-0235-R01	The batteries to be located under left hand side of cab.	1
CAB MODEL		
1500-0011	Four door Navistar 4400 4x2.	1
CAB BADGE PACKAGE		
1610-0000	Cab and body to have applicable E-ONE logos.	1
CAB DOOR OPTIONS		
1550-0059-000-G6	Reflective Red/Lemon Yellow printed striping positioned in the "A" formation located on the cab door panels.	1
MISC EXTERIOR CAB OPTIONS		
1675-0007	Diesel fuel only label.	1
SEATS		
1510-0151	Universal air pack bottle bracket installed (EA).	4
1685-0032	Seating capacity tag of five occupants.	1
CAB ELECTRICAL OPTIONS		
1750-0024-277-04	Auto-Eject receptacle inlet 20 amp located driver's door step area with a Yellow cover.	1
1750-0343	Battery charger E-ONE LPC 20. 120 volt inlet, 20 amp output.	1
BODY COMPT LEFT SIDE		
3100-0153	Driver side body with full height 42" wide forward and 56" wide rearward enhanced extended compartmentation. Includes (1) 56" wide compartment over the wheel well.	1
BODY COMPT RIGHT SIDE		
3120-0283	Officer side body with full height 42" wide forward and 56" wide rearward enhanced extended compartmentation. Includes (1) 56" wide compartment over the wheel well and one (1) storage tunnel.	1
BODY COMPT REAR		
3110-0013	Full Height Rear Compartment with Officer Side Storage Tunnel. Includes smooth plate panels and storage access door with push button latch.	1
3110-0052	Bolt-on diamond plate tailboard (full width of rear compartment). Includes the	1

	enhanced extended side compartment frame work and handrails- (2) vertical on trailing edge of body and horizontal mounted handrail(s) below hosebed.	
3110-0092	Enhanced Extended Compartmentation stepped down below hosebed level. Includes embossed diamond plate compartment tops.	1
DOORS		
3300-0017-004	Door roll up short (up to 45") with satin finish ROM. Location(s): L2.	1
3300-0017-016	Door roll up short (up to 45") with satin finish ROM. Location(s): R2.	1
3300-0019-003	Door roll up tall (greater than 45") with satin finish ROM. Location(s): L1.	1
3300-0019-005	Door roll up tall (greater than 45") with satin finish ROM. Location(s): L3.	1
3300-0019-015	Door roll up tall (greater than 45") with satin finish ROM. Location(s): R1.	1
3300-0019-017	Door roll up tall (greater than 45") with satin finish ROM. Location(s): R3.	1
3300-0019-027	Door roll up tall (greater than 45") with satin finish ROM. Location(s): B1.	1
SHELVES		
3370-0025-101	Permanent shelf. Locate in R1 at offset (above extrusion if applicable).	1
3370-0025-102	Permanent shelf. Locate in R3 at offset (above extrusion if applicable).	1
3370-0052-003	Adjustable shelf (J-Style) for non-transverse compartments 16" or greater in depth. Location: L1.	1
3370-0052-004	Adjustable shelf (J-Style) for non-transverse compartments 16" or greater in depth. Location: L2.	1
3370-0052-005	Adjustable shelf (J-Style) for non-transverse compartments 16" or greater in depth. Location: L3.	1
3370-0052-027	Adjustable shelf (J-Style) for non-transverse compartments 16" or greater in depth. Location: B1.	1
3370-0054-003	Tracks for adjustable shelf and/or adjustable tray in compartments 16" or greater in depth. Location: L1.	1
3370-0054-004	Tracks for adjustable shelf and/or adjustable tray in compartments 16" or greater in depth. Location: L2.	1
3370-0054-005	Tracks for adjustable shelf and/or adjustable tray in compartments 16" or greater in depth. Location: L3.	1
3370-0054-027	Tracks for adjustable shelf and/or adjustable tray in compartments 16" or greater in depth. Location: B1.	1
COVERS		
3305-0007-000-02	Vinyl Red hose bed cover with attached rear flap(s).	1
3305-0008-000-02	Vinyl Red crosslay cover with attached side flaps.	1
PUMP MODULE		
3130-0167	Pump module to be 76" wide (side to side). Includes upper, lower, crosswalk, speedlay and tranverse module(s) if applicable.	1
3130-0523	Side mount pump module. Extruded aluminum with runningboards.	1

3130-0532	Pump panel opening is 39" wide. Pumper / tanker only.	1
3130-0539	Pump module height is 75". Pumper / tanker only.	1
PUMP PANELS		
3134-0016	Stainless steel driver and officer side pump panels.	1
3134-0064	The gauge panel(s) on the driver side of the Side Mount module to be hinged upward. Panel(s) to include (2) mechanical/pneumatic (as applicable to panel size) hold opens and latches.	1
3134-0143	Officer side pump panel to be vertical hinged on forward extrusion. Panel to be (3) pieces with upper (2) panels secured in the closed position with push button latches. Upper panel to be held open with gas shock.	1
MISC PUMP PANEL OPTIONS		
4460-0003	Pump panel tags color coded per NFPA compliance.	1
PUMP MODULE OPTIONS		
3136-0058	E-ONE logo mounted one each side on pump module/preconnect panels. Logos to be sized as applicable to available space on panels.	1
3136-0138	Pump module storage pan.	1
3136-0141	Crosslay double 4.25" wide single stack to hold up to 200' of 2.0" DJ (each).	1
WATER TANK		
4010-0099	Fill tower(s) to be located offset to officer side of water tank.	1
4010-0177	780 Gallon "R" Water Tank. UPF Poly III color fill towers. Note: Any foam cell(s) and/or storage options through the tank will reduce the overall water capacity.	1
TANK PLUMBING		
4450-0010	2" tank fill Akron manual valve.	1
4450-0119	3" tank to pump Akron manual valve w/4" tank connection.	1
LADDER STORAGE / RACKS		
3365-0028	Hard Suction Storage Rack. Driver side compartment top. Includes spring hold downs and scuff plates behind spring mounts (as applicable).	1
3365-0035	Hard Suction Storage Rack. Officer side compartment top. Includes spring hold downs and scuff plates behind spring mounts (as applicable).	1
3365-0049	Brand of ladders capable of being carried on unit to be Alco-Lite.	1
3365-0087-Z71	The length of ladders capable of being stored shall be the following: 24' 2-section, 14' roof ladder and 10' attic ladder w/shoes.	1
3365-0149-O97	Storage tunnel capable of holding: (1) 2-section, (1) roof, (1) attic, (2) pike poles, (1) backboard in Officer side storage tunnel.	1
HANDRAILS / STEPS		
3330-0103	Dual lighted LED folding steps rear NFPA. Includes folding steps on driver side (staggered stepped as applicable with tailboard depth) for NFPA hosebed access and	1

	handrail mounted on driver side upper hosebed side (as applicable).	
3330-0105-060	Dual lighted LED folding step. Location: officer side front compartment face. Each location requires a minimum of (1) handrail per NFPA.	3
3330-0105-062	Dual lighted LED folding step. Location: driver side front compartment face. Each location requires a minimum of (1) handrail per NFPA.	3
MISC BODY OPTIONS		
3090-0002	OAH. Unit has no overall height restrictions.	1
3090-0004	OAL. Unit has no overall length restrictions.	1
3090-0007	The hose bed is to have NFPA capacity.	1
3340-0004	Hosebed above the booster tank. Includes forward hosebed and tower(s) cover plate work (as applicable). Hosebed adjustable divider extrusion rearward of the furthest tower is to run full width of the hosebed (as is practical with other hosebed mounted equipment).	1
3340-0035	Divider Long. To run full length of hose bed (front to rear).	1
3340-0075	Body mainframe and hosebed side assemblies for a 90" high body.	1
3340-0088	Smooth plate single axle wheel well painted job color. Includes bolt-on composite wheel well liners.	1
3340-0093	Mud flaps, rear, black with E-ONE logo.	1
3340-0110	The rear of each hose bed divider to have a hand hold cut-out(s).	1
3340-0145	Rub rail for the body and pump area module(s).	1
3340-0680	Body mainframe layout line to be 23". Includes body and all applicable modules.	1
SCBA BOTTLE STORAGE		
3320-0020	SCBA Bottle Storage. (4) Fire Shopp SCBA bottle storage with hinged doors with push button latches. (2) officer side and (2) driver side in wheel well area.	1
3320-0100	Strap(s), loop style to retain SCBA bottle(s). Locate one per bottle in each exterior storage compartment.	4
PUMPS		
4005-0013	Hale QFLO 750-1250 GPM pump, single stage.	1
4005-0030	Rating 1250 GPM	1
PUMP CERTIFICATION		
4475-0000	Pump certification 750-2250 GPM	1
PUMP OPTIONS		
4015-0008	Zinc anodes for Hale pump (PR), (1) discharge side and (1) intake side.	1
4015-0053-198	Steamers to be Flush + 1". Location: driver's side.	1
4015-0053-199	Steamers to be Flush + 1". Location: officer's side.	1
4015-0098	Manual operated master pump drain. The master drain shall be clearly marked and placed in accessible location on pump panel.	1

4015-0210	Pump cooler with Innovative Control 1/4 turn valve with "T" handle and label.	1
INTAKES		
4440-0005	2.5" Left Intake Akron Manual Valve.	1
INTAKE OPTIONS		
4445-0048	Intake pressure relief valve, Task Force Tips.	1
DISCHARGES AND PRECONNECTS		
4415-0012-654	1.5" crosslay with Akron manual valve. Location: crosslay 1 & 2.	2
4415-0014-581	2.5" Left Pump Panel Discharge Akron Manual Valve. Location: left side discharge 1.	1
4415-0014-582	2.5" Left Pump Panel Discharge Akron Manual Valve. Location: left side discharge 2.	1
4415-0022-350	2.5" Left Rear Discharge Akron Manual Valve. Location: left rear discharge.	1
4415-0041	3" Deck Gun Discharge, Akron manual valve.	1
4415-0054-583	4" Right Pump Panel Discharge with 3" Akron Manual Valve (Waterous pumps noted location to be forward lower port). Location: right side discharge 1.	1
4417-0106-L65	Deck gun piping to be positioned centered in deck gun channel.	1
DISCHARGE OPTIONS		
4417-0175	Innovative Controls push/pull valve controls with locking T handles.	1
4417-0177	Innovative Controls 3/4" bleeder/drain valve include 1/4 turn T-handle.	7
4417-0185	Innovative Controls discharge and intake bezels with integral color code and verbiage for side mount pump panel.	1
PRESSURE GOVERNORS		
4465-0011	Class 1 TPG pressure governor. Includes, water, oil, volt and tachometer.	1
GAUGES		
4435-0083	Innovative Controls 10 LED SL series water tank level gauge. On pump panel.	1
4435-0246	2.5" Innovative Controls stainless steel case pressure gauge (0-400) with color code bezel.	7
4435-0247	4" Innovative Controls stainless steel case master pressure gauges with bezel. Intake 30-0-400, and discharge 0-400.	1
ELECTRICAL SYSTEMS		
5010-0014-E12	Vehicle data recorder for commercial cab - 2009 NFPA compliant. Includes occupant detection with display. Display location: outboard on driver's side overhead console.	1
5010-0036	V-MUX Electrical system for pumper / tanker / rescue.	1
5010-0059-339	VFD Text display for V-MUX electrical system. Location: center of dash.	1

LIGHT BARS		
5300-0267	Light bar Whelen Justice model JE2NFPA 56" LED with clear lenses and MKEZ7 mounts. N/A on Vista roofs with front facing windows. Includes (4) red corner facing LIN6 LED lights, (6) forward facing CON3 Linear LED lights; (4) red, (2) white. Location: Centered on the front cab roof.	1
WARNING LIGHT PACKAGES		
5550-0128-535	Whelen Super LED lower level warning light package. Includes (6) red 600 LED light heads, (2) red LIN3 lights and (2) red 500 LED light heads w/chrome flanges. Locate side facing lights: at forward most position, centered in rear wheel well, and side facing at rear of body in rubrail if equipped.	1
WARNING LIGHTS		
5600-0078-479-06	Whelen Super LED beacon (PR) model L31H with Red domes. Location rear upper body on aerial style brackets.	1
5600-0105-170	Hazard (door ajar) light 2" LED. Location: center overhead.	1
SIRENS		
5500-0015	Whelen model 295SLSA1 siren with microphone (replaced 295HFSA1).	1
5500-0024-170	The electronic siren control is to be located on the center overhead.	1
SPEAKERS		
5510-0028	Speaker Federal Dynamax ES100. Located officer's side behind tow hook. Navistar 4400 chassis only.	1
DOT LIGHTING		
5150-0007	Whelen 600 series LED vertical mount tail lights. Includes LED stop/tail, arrow turn and halogen back-up lights with vertical Cast 3 housing and weatherproof connectors.	1
5150-0017	License plate light LED with chrome housing located at the rear of the body.	1
5150-0022	Marker light LED body package. Commercial pumper bodies only.	1
5150-0032	Bracket license plate at rear of body.	1
LIGHTS - COMPARTMENT, STEP & GROUND		
5380-0077	Compartment light package Amdor Luma-Bar LED for medium bodies. Includes one light per compartment (two if transverse).	1
5380-0200	Ground light package EON LED - small.	1
LIGHTS - DECK AND SCENE		
5390-0058-395	Deck Lights - Truck-Lite LED model 81380 (PR). Location: rear body/beavertail area on the trailing edge up high.	1
5390-0076	Hose bed light Truck-Lite LED model 81380. Locate at front of hose bed. Switched with work light switch in cab.	1
5390-0102	Crosslay light Truck-Lite LED model 81380. Locate to rear of crosslay (SM) and	1

	forward of crosslay (TM as applicable). Switched with work light switch in cab.	
LIGHTS - NON-WARNING		
5400-0003	Engine compartment light (EA).	1
5400-0010	Incandescent pump compartment light (EA).	1
5400-0031	Pair of Cab Dome Large Lights mounted driver and officer side front. N/A on E-One Chassis. Required on Comm Chassis.	1
5400-0032	Pair of Cab Dome Large Lights mounted driver and officer side Rear. N/A on E-One Chassis or two door commercial chassis. Required on Comm Chassis.	1
5400-0039	Spotlight Specialty 2150 hand held located on officer's side of cab dash - hardwired.	1
5400-0092	Weldon pump panel LED light package with (3) lights per side pump panel. Pump panels over 45" may require additional lights. Side mount only.	1
CONTROLS / SWITCHES		
5100-0007-198	Foot switch to control electronic siren located driver's side.	1
MISC ELECTRICAL		
5110-0017	Back-up alarm 97 dB.	1
LIGHTS - QUARTZ		
5450-0290-407	Light Whelen Pioneer model PFP1 12V with internal top raise pole mount. Includes switch accessible to driver. Location: driver side of pump module forward area.	1
5450-0290-408	Light Whelen Pioneer model PFP1 12V with internal top raise pole mount. Includes switch accessible to driver. Location: officer side of pump module forward area.	1
ELBOWS		
7400-0004	Elbow 30 degree chrome swivel w/2.5"FNST x 2.5"MNST.	3
HAND TOOLS		
7600-0005	Pike Pole Fiberglass 6'.	1
7600-0007	Pike Pole Fiberglass 10'.	1
HOSE / NOZZLES		
7700-0004	Hard suction hose 6" X 10' with Pyrolite couplings.	2
GROUND LADDERS		
7800-0007	Alco-Lite PRL-14' roof ladder.	1
7800-0016	Alco-Lite PEL-24' 2-section extension ladder.	1
7800-0032	Alco-Lite FL-10, 10' folding ladder w/safety shoes.	1
MISC LOOSE EQUIPMENT		
7900-0010	Chrome Barrel Strainer 6" NST.	1
7900-0014	DOT Required Drive Away Kit - Kit includes three (3) triangular warning reflectors	1

MISC LOOSE EQUIPMENT			
	with carrying case. This kit is for the end user and is to remain with the truck.		
EXTERIOR PAINT			
8100-0071	Undercoating E-ONE.	1	
8100-0089	All applicable pump/pre-connect application modules are to have a sanded finish (not painted job color). Includes upper and lower pump modules, crosswalk module and/or speedlay/pre-connect module (as applicable). Rear mounted body/pump module to be painted job color.	1	
8100-0116	Rear body surface to have a sanded finish (not painted job color). Includes hinged doors that do not have discrete sales codes and removable panels.	1	
8100-0182-000-17	Paint Body - Small - For Pumpers, Rear Mounts, S/A Tankers/Wetsides and Rescues. Sikkens paint. Color: FLNA3225E-1 Red.	1	
8100-0442-000-17	International cab paint (by chassis OEM). Paint to match FLNA3225E-1 Red.	1	
STRIPING			
8300-0002-859-12	NFPA Scotchlite Stripe - 4" wide and straight on front/sides of cab and sides/rear of body. Color: White. Location: bottom of stripe flush with bottom of cab and straight back.	1	
8300-0042	White rubrail scotchlite insert.	1	
8300-0084-000-72	Chevron "A" style 6" printed sheet Scotchlite striping full width on rear of body. Includes rear facing extrusions, panels and doors. Colors to be Yellow/Red.	1	
WARRANTY / STANDARD & EXTENDED			
9100-0000	Standard 1 Year Warranty.	1	
9100-0004	10 Year/100,000 Mile Structural Warranty for Alum Cab / Body - Statement of Warranty.	1	
9100-0005	10 Year Stainless Steel Plumbing Warranty - Statement of Warranty.	1	
9100-0019	10 Year Limited Paint and Perforation Warranty - For Sikkens Paint.	1	
SUPPORT, DELIVERY, INSPECTIONS AND MANUALS			
9300-0009	Manuals, Operator and Service CD-ROM.	1	
9300-0316	Fire Apparatus Safety Guide published by FAMA, latest edition.	1	
PRICE	2016 E-ONE RESCUE PUMPER - INTERNATIONAL 4-DR CHASSIS		$258,310

STATE OF OHIO TERM SCHEDULE

4200 SURFACE RD
COLUMBUS, OH 43228

Quote No: 70545

3/13/2015

Quote Rev:21 Drawing Rev:3

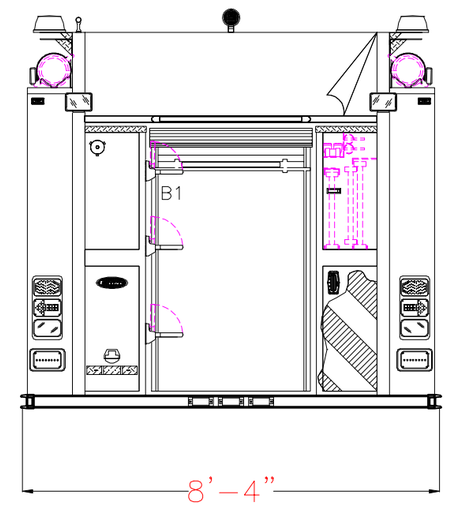

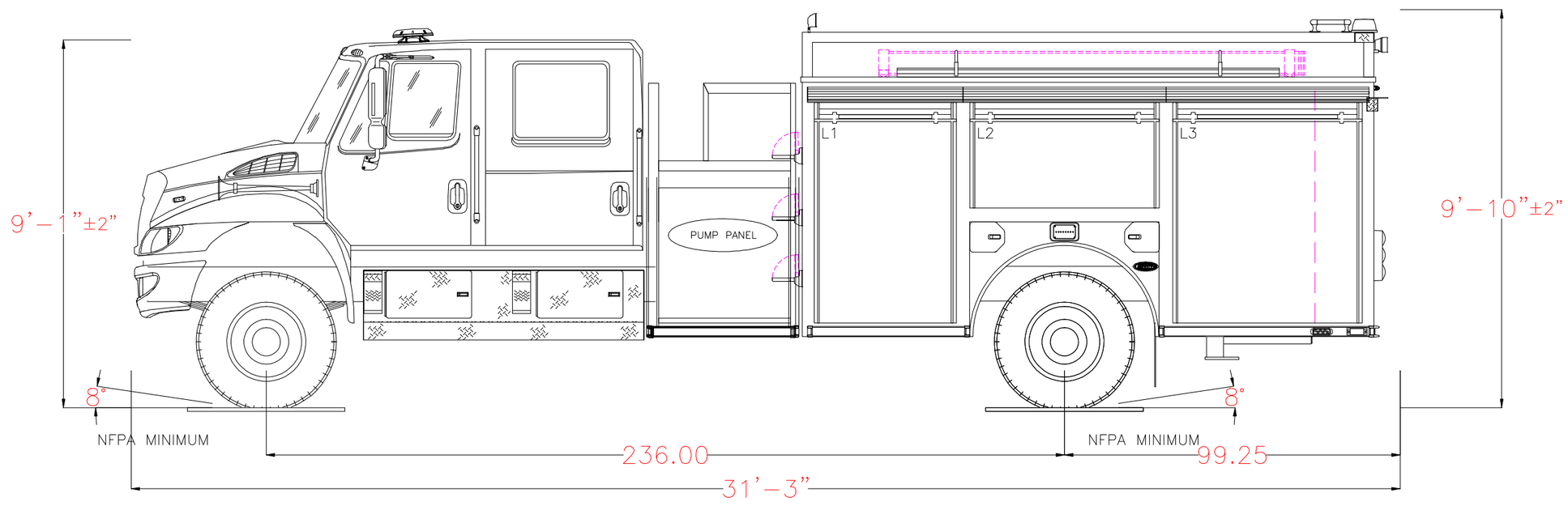

POWERED BY EZDRAW

Notice: This drawing provides a GENERAL REPRESENTATION of the vehicle configuration and should be used for evaluation purposes. The respective dimensions shown,including overall height and length, are estimates and may vary due to manufacturing processes. All other items such as lighting and fixtures, plumbing, compartmentation, and other generally assembled details are shown for REFERENCE ONLY and may not be a direct reflection of the final truck configuration. In ALL situations where this drawing may conflict with the specifications, THE SPECIFICATIONS, AS REFLECTED IN THE APPROVED SHOP ORDER, SHALL PREVAIL. Unless otherwise specified, the proposed apparatus will be manufactured to the latest NFPA recommendations as well as other applicable federally regulated safety regulations. E-One reserves the right to engineer and incorporate design improvements and changes without notice, while adhering to the intent of the specification.

1250 GPM HALE QFLOPUMP 0 TOTAL VOLUME 0 TOTAL FOAM	HOSE LOADS :

	OPENING		INTERIOR DIMENSIONS				
COMPT.	WIDTH	HEIGHT	WIDTH	LOWER HEIGHT	LOWER DEPTH	UPPER HEIGHT	UPPER DEPTH
L1	40	59.75	42	30	26	26.75	26
L2	54	25.75	56	N/A	N/A	26.75	26
L3	54	59.75	56	30	26	26.75	26
R1	40	59.75	42	30	26	26.75	12
R2	54	25.75	56	N/A	N/A	26.75	12
R3	54	59.75	56	30	26	26.75	12
B1	36	45	38	30	26	N/A	N/A

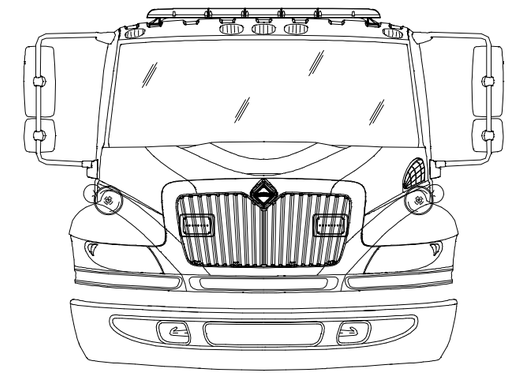

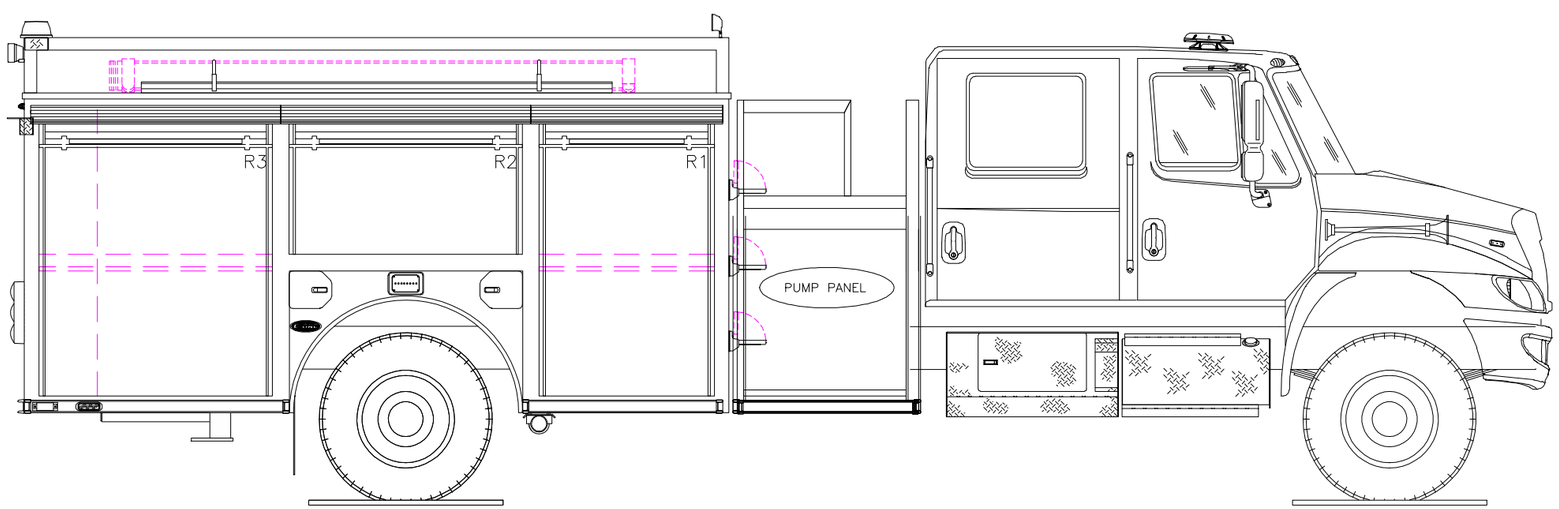

POWERED BY EZDRAW

E-ONE OHIO STATE TERM SCHEDULE 2016 OPTIONS PRICE BOOK
PUMPERS - COMMERCIAL CHASSIS

	Chassis	
1500-0008	Two door Freightliner M2 106 4x2	$88,580
1500-0009	Four door FreightIner M2 106 4x2.	$98,270
1500-0010	Two door International 4400 4x2.	$88,405
1500-0011	Four door Navistar 4400 4x2.	$96,286
	Chassis Mods	
1020-0010	Comm Chassis Prep E-1 Supp-FL.	$3,361
1020-0011	Comm Chas Prep E-1 Supp-Non FL.	$5,235
1020-0016	Install closed coupled drive shafts for 4x4 application	$578
1020-0019	Comm Chas Prep E-1 Supp-Non FL relocate batteries to [#LOC].	$6,055
1020-0033	Comm Chas Prep Navistar, Wildland.	$8,288
1020-0039	Chassis prep for a Peterbuilt chassis. Includes relocating of batteries, exhaust positioning, Fast idle control/switching, master lighting switch, master battery switch, auxiliary engine cooler connection and controller.	$5,661
1050-0007	Front axle wheel trim kit. Includes stainless steel lug nut covers (chrome plated plastic if applicable) and center cap with E-ONE logo. Note: Center cap will have an inspection port IPO a logo if equipped with Stemco oil seals.	$256
1050-0008	Rear axle (single) wheel trim kit. Includes stainless steel lug nut covers (chrome plated plastic if applicable) and center cap with E-ONE logo. E-ONE custom chassis w/steel wheels will have chrome plated plastic lug covers.	$315
1050-0029	Front & rear axle wheel simulator kit. Includes stainless steel wheel simulator and center cap with E-ONE logo.	$1,850
1050-0073	Wheel trim package. For use with steel or aluminum wheels.	$477
1060-0101	Tire pressure monitoring integrated with V-MUX multiplex electrical system. Requires Vista display and D-TEK. For use with single rear axle units.	$683
1060-0102	Tire pressure monitoring integrated with V-MUX multiplex electrical system. Requires Vista display and D-TEK. For use with tandem rear axle units.	$1,178
1060-0103	Cat's Eye model 6130-AB00 single rear axle tire pressure monitoring system. For use on 130 PSI tires. Includes braided lines.	$864
1060-0117	RWC AirGuard LED tire pressure monitoring valve stem caps (6) for single rear axle applications.	$182
1060-0119	RWC AirGuard LED tire pressure monitoring valve stem caps (10) for tandem rear axle applications.	$290
1060-0123	RWC AirGuard LED tire pressure monitoring valve stem caps (2) front only. For use with rear axle Crossfire equalization systems.	$73
1110-0000	Inlet for air system. Location: [#LOC].	$392
1110-0001	Air inlet auto eject. Includes weatherproof gasketed cover. [#LOC].	$504
1110-0009	Air horns on hood pair. Requires control.	$635
1110-0010	Air inlet. To charge brake system. Commercial chassis only. Location: [#LOC].	$392
1110-0012	Air outlet off front ACC tank. It shall be located [#LOC].	$392
1110-0013	Air horns shut-off valve. Located in cab accessible by driver.	$115
1110-0026	Air horns recessed in bumper (PR).	$869
1110-0027	Isolated air tank. Includes pressure protection valve.	$591
1110-0037	Air Horns bumper mounted. Commercial chassis.	$844
1110-0041	Air horns Grover recessed in bumper (PR).	$1,059
1110-0044	Air inlet Auto-Eject. Includes [#COL] weatherproof gasketed cover. Location: [#LOC].	$504
1110-0046	Kussmaul 12V Auto Drain. For use with Kussmaul air compressor.	$491
1110-0052	Air horns recessed behind bumper (PR). Includes E-ONE grilles on bumper.	$1,094
1110-0055	Air horns will alternate from driver to officer.	$421
1110-0058	Air horns recessed in bumper (PR) with bells behind bumper.	$931
1110-0068	Dual Grover Hood Mounted Air Horns with Driver and Officer Foot Switches to be Supplied and Installed by E-One.	$1,059
1110-0082	Air horns Grover model 2040 rectangular recessed in bumper (PR) with snow caps.	$1,129
1110-0085	Bumper mounted Grover 21" air horns. Controls required and provided separately.	$914
1110-0087	Air inlet. To charge brake system. Commercial chassis only. Inlet to be located within the cab and accessable from the driver side door area.	$392
1110-0089	Single Grover 1512 air horn, steering wheel and officers foot switch controlled, Wildland	$693
1110-0090	Air horns Grover recessed in bumper (PR) with snow caps.	$1,194
1110-0106	Air horns Grover recessed behind bumper (PR). Includes E-ONE grilles on bumper.	$1,284
1110-0116	Air horns Buehl recessed in bumper (PR).	$1,103
1110-0117	Air horns Grover model 2040 rectangular recessed in bumper (PR).	$1,129
1110-0118	Inlet for air system. Includes weather proof box and Hubbel [#COL] cover. Location: [#LOC].	$500
1110-0123	Dual Stuttertone Hood Mounted Air Horns to be Supplied and Installed by Freightliner. Lanyard activation sold separately. Tradition	$610
1110-0124	Air horns Grover recessed behind bumper (PR). Includes grilles (No Logo) on bumper.	$1,284
1110-0138	Air horns Grover model 2040 rectangular behind bumper (PR). Includes E-ONE grilles.	$1,354
1150-0054	Hinged diamond plate lid for driver side bumper tray. Includes 1/4 turn latch and gas shock hold open.	$285
1150-0055	Hinged diamond plate lid for center bumper tray. Includes 1/4 turn latch and gas shock hold open.	$314
1150-0056	Hinged diamond plate lid for officer side bumper tray. Includes 1/4 turn latch and gas shock hold open.	$285
1150-0059	Red vinyl lid with velcro fasteners for bumper tray driver side.	$187
1150-0060	Red vinyl lid with velcro fasteners for bumper tray officer side.	$187
1150-0061	Red vinyl lid with velcro fasteners for bumper tray center.	$187
1150-0062	Black vinyl lid with velcro fasteners for bumper tray driver side.	$187

1150-0063	Black vinyl lid with velcro fasteners for bumper tray officer side.	$187
1150-0064	Black vinyl lid with velcro fasteners for bumper tray center.	$187
1150-0065	Diamond plate lid for driver, center, and officer hose trays. 5.25" high with dual chrome grab handles, rubber hood latches and gas shocks.	$614
1150-0085	Nylon black strap on officer side front bumper tray (EA).	$81
1150-0086	Nylon black strap on driver side front bumper tray (EA).	$81
1150-0087	Nylon black strap on center front bumper tray (EA).	$81
1150-0088	Tray officer side bumper outboard with slats 23x18x14 for 202 feet of 1 3/4" double jacket hose	$715
1150-0089	Tray driver side bumper outboard with slats 23x18x14 for 202 feet of 1 3/4" double jacket hose	$715
1150-0090	Tray center of bumper with slats 20x18x14 for 176 feet of 1 3/4" double jacket hose or 67 feet of 5" LDH.	$654
1150-0091	Tray officer side bumper outboard with slats 23x14x14 for 157 feet of 1 3/4" double jacket hose.	$715
1150-0092	Tray driver side bumper outboard with slats 23x14x14 for 157 feet of 1 3/4" double jacket hose.	$715
1150-0093	Tray center of bumper with slats 20x14x16 for 136 feet of 1 3/4" double jacket hose or 52 feet of 5" LDH	$654
1150-0094	Hinged diamond plate lid for driver side bumper tray. Includes D-Ring latch and gas shock hold open.	$312
1150-0095	Hinged diamond plate lid for center bumper tray. Includes D-Ring latch and gas shock hold open.	$341
1150-0096	Hinged diamond plate for officer side bumper tray. Includes D-Ring latch and gas shock hold open.	$312
1150-0102	Diamond plate lid for driver hosetray. 5.25" high with chrome grab handle, rubber hood latch, gas shock and water stop angle.	$404
1150-0103	Diamond plate lid for center hose tray 5.25" high with chrome grab handle, rubber hood latch, gas shock and water stop angle.	$404
1150-0104	Diamond plate lid for officer hosetray. 5.25" high with chrome grab handle, rubber hood latch, gas shock and water stop angle.	$404
1150-0107	Nylon black strap with clip release on officer side front bumper tray.	$144
1150-0108	Nylon black strap with clip release on driver side front bumper tray.	$144
1150-0109	Nylon black strap with clip release on center front bumper tray. The strap shall be attached to the inboard side of the tray and shall not reduce the overall tray capacity	$144
1150-0115	Notch bumper tray lid for preconnected hose. Notch location: [#LOC].	$141
1150-0118	Bumper tray driver's side with slats 14 inches deep (approx 13 inches to slats).	$471
1150-0119	Bumper tray center of bumper with slats 10 inches deep (approx 9 inches to slats).	$471
1150-0121	Bumper tray center of bumper with slats 14 inches deep (approx 13 inches to slats).	$471
1150-0124	Bumper tray officer's side with slats 14 inches deep (approx 13 inches to slats).	$471
1150-0128	Notch front bumper tray for speaker/Q2B/radar. Will reduce front hose/equipment load. Center tray only.	$127
1150-0130	Black nylon cargo net on center front bumper tray.	$308
1150-0131	Extinguisher tube in front bumper extension. Location: [#LOC].	$794
1150-0136	Bumper tray center of bumper with slats 16 inches deep (approx 15 inches to slats). Mount tray 1" above gravel shield.	$563
1150-0138	Bumper pan driver's side without slats 4 inches deep with strap. For use with suction strainer only.	$471
1150-0139	Nylon black strap with aluminum quick release buckle for front bumper hose tray. Strap to attach to front and rear walls of tray down low as applicable. Location: [#LOC].	$118
1150-0140	Bumper tray center of bumper with slats 14 inches deep (approx 13 inches to slats). Mount tray 1" above gravel shield.	$563
1150-0145	Single crosslay on top of the front bumper gravel shield. Tray to be "U" shape, 10" wide x 8" high x the width of the gravel shield. Vinyl cover, [#COL], with end flaps to cover crosslay, velcro along front edge, fastened along back. Requires 24" extension.	$866
1150-0146	Water stop angle. Gravel shield mounted. Requires raised lid and/or 28" bumper extension with reel trays.	$201
1150-0149	Nylon black cargo net on sides for bumper crosslay.	$228
1150-0150	Double crosslay on top of the front bumper gravel shield. Tray to be "U" shape, approx 20" wide x 7.5" high x 90" wide minimum or as per application bumper width. Holds 200' of 1.75" DJ (each). Includes tri-fold diamond plate cover hinged at the front. Requires seperate side cover option and 28" extension.	$1,484
1150-0154	Bumper tray center of bumper with slats located to rear of Q2B. Tray to be approx 34"W x 9"L x 10" deep (9" to slats).	$684
1150-0155	Tray officer side bumper outboard for hydraulic/cord reel.	$760
1150-0156	Tray driver side bumper outboard for hydraulic/cord reel.	$760
1150-0157	Diamond plate raised full lid for extended front bumper. 6" high with dual chrome grab hands, rubber hood latches and gas shocks.	$733
1150-0159	Bumper tray center of bumper with slats 16 inches deep (approx 15 inches to slats).	$471
1150-0161	Double crosslay on top of the front bumper gravel shield. Tray to be "U" shape to hold 200' of 1.75" DJ (each). Includes bi-fold diamond plate cover hinged at the rear. Requires separate side cover option and 28" extension.	$1,484
1150-0164	Bumper tray center of bumper with black Turtle Tile 14" deep (approx. 13.25" from tile). Includes: hinged diamond plate lid for center bumper tray with Tri-Mark latch, gas shock hold open and door ajar switch.	$973
1150-0168	Bumper tray center of bumper without slats 10 inches deep.	$403
1150-0169	Bumper tray center of bumper without slats 12 inches deep.	$403
1150-0170	Bumper tray center of bumper without slats 14 inches deep.	$403
1150-0174	Slatted Duradek flooring in driver side bumper tray.	$61
1150-0175	Slatted Duradek flooring in center bumper tray.	$61
1150-0176	Slatted Duradek flooring in officer side bumper tray.	$61

1150-0177	Notch front bumper tray for speaker/Q2B. Will reduce front hose/equipment load. Driver's side only.	$127
1150-0179	Bumper tray center of bumper without slats 16 inches deep.	$403
1150-0181	Nylon black strap with aluminum quick release buckle for front bumper hose tray. Strap to attach to side walls of tray down low as applicable. Location: [#LOC].	$118
1150-0184	Vinyl [#COL] side covers for diamond plate bumper crosslay cover.	$193
1150-0187	Nylon yellow strap with aluminium quick release buckle for front bumper hose tray. Strap to attach to front and rear walls of tray down low as applicable. Location: [#LOC].	$118
1150-0188	Front bumper stainless steel hose wells, Duradek, w/hose retaining straps, Wildland	$1,843
1150-0189	Front bumper stainless steel hose wells, Duradek, ADT hinged covers, Wildland	$2,166
1150-0190	Front bumper stainless steel hose well lowered extensions, Wildland	$970
1150-0191	Center Front bumper stainless steel well, SS floor, ADT hinged cover, Wildland	$739
1150-0192	Center front bumper stainless steel well, ADT hinged cover, Used w/Winch Option, Wildland	$467
1150-0193	Bumper tray center of bumper with black turtle tile 16 inches deep (approx 15 inches to tiles).	$471
1150-0194	Dri-Deck will be added to the center bumper tray. Color will be black.	$86
1150-0195	Bumper tray center of bumper with black Turtle Tile 14" deep (approx. 13.25" from tile).	$471
1150-0197	Nylon black strap with aluminium quick release buckle. Location: driver, officer and center top of front bumper gravel shield.	$351
1150-0198	Notch front bumper tray for speaker/Q2B. Will reduce front hose/equipment load. Officer's side only.	$127
1150-0199	Nylon black cargo net with bungee hold downs on sides for bumper crosslay.	$282
1150-0200	Bumper tray center of bumper with slats 18 inches deep (approx 17 inches to slats).	$471
1150-0201	Notch front bumper tray for speaker/Q2B. Notch to be sized as close to obstacle as possible to provide more storage space in tray. Will reduce front hose/equipment load. Center only.	$127
1150-0202	Bumper tray center of bumper with slats 12 inches deep (approx 11 inches to slats). The bumper tray shall be raised 2" above the gravel shield (12" total depth). The bumper tray shall be approximately 17" front to rear X 30" in length side to side. A divider shall be centered (spanning from front to back) making a left hand and right hand center bumper tray.	$471
1150-0207	Hinged diamond plate lid for center bumper tray. Includes 1/4 turn latch and moon spring hold open.	$314
1150-0211	Bumper tray center of bumper with slats 16 inches deep (approx 15 inches to slats). Mount tray 1" above gravel shield. Forward bottom edge has 45 degree cut to improve approach angle. Forward cut height begins at approximate tray depth as it aligns with bumper bottom, continuing rearward at a 45 degree angle.	$675
1150-0212	Nylon black strap with clip release on officer side front bumper tray running front to back.	$144
1150-0213	Bumper tray center of bumper (w/o slats) 10 inches deep.	$471
1150-0214	Traffic cone storage on front bumper extension. Cones to be oriented downard through a 7 3/4" hole in the gravelshield. Includes nylon strap with aluminum buckle. Location: [#LOC].	$390
1150-0215	Hinged diamond plate lid for center bumper tray. Includes 1/4 turn latch and two (2) gas shock hold open.	$343
1150-0216	Bumper tray lid(s) to be constucted using 3/16" aluminum ipos.	$150
1150-0219	Additional gas shock on front bumper tray lid. Location: [#LOC].	$162
1150-0223	Bumper tray officer's side with slats 16 inches deep (approx 15 inches to slats).	$471
1150-0225	The rear wall of bumper tray to have louvers for additional ventilation. Location: [#LOC].	$184
1150-0227	Bumper tray center of bumper with slats 18 inches deep (approx 17 inches to slats).	$403
1150-0228	Bumper tray driver's side of bumper with black Turtle Tile 14" deep (approx. 13.25" from tile).	$471
1150-0230	Bumper trough full length, mounted on top of gravel shield. Trough shall run side to side 4" high, 7" wide made from 3/16" smooth plate aluminum.	$252
1150-0231	Nylon black strap with aluminum quick release buckle for front bumper hose tray. Strap to attach to front and rear walls of tray as high as possible. Location: [#LOC].	$118
1150-0232	Hinged diamond plate lid for center bumper tray. Includes Tri-Mark latch and gas shock hold open.	$420
1150-0233	Hinged smooth plate lid for driver side bumper tray. Includes D-Ring latch and gas shock hold open. Lid to painted with black Scorpion brand coating inside and outside surfaces (smooth finish).	$415
1150-0236	Recessed bumper double crosslay to hold of 200' of 1.75" DJ hose in each crosslay. The crosslay floor/bottom shall be slotted to allow drainage (no slats). Includes hinged bi-fold raised lid in center with outboard fixed panels for optional equipment and stainless steel scuff guards at each side of crosslay opening across bottom and sides. Requires 28" extension, side covers, 12" heavy duty bumper and engineering approval.	$3,844
1150-0239	Bumper trays shall have 1/2" drain holes IPOS.	$28
1150-0241	Bumper tray center of bumper with slats 14 inches deep (approx 13 inches to slats) fabricated from smooth plate aluminum. Outside facing surface of tray below bumper shall be painted black Durabak.	$564
1150-0247	Hinged diamond plate lid raised 3" high for center bumper tray. Includes a single chrome grab handle, SS butterfly latches and gas shocks.	$383
1150-0250	Single crosslay on top of the front bumper gravel shield. Tray to be "U" shape, approx 10" wide x 7.5" high x 90" wide. Holds 200' of 1.75" DJ (each). Includes diamond plate cover hinged at the front. Requires seperate side cover, and 24" extension.	$1,163
1150-0251	Bumper tray center of bumper with slats 14 inches deep (approx 13 inches to slats). Tray to be as wide as possible.	$471
1150-0253	Black nylon cargo net on driver side front bumper tray.	$308
1150-0255	Hinged smooth plate lid for driver side bumper tray. Includes D-Ring latch and gas shock hold open. Smooth plate lid will be painted with black Durabak.	$397
1150-0256	Bumper tray(s) to be constructed using smooth plate aluminum with exterior surface painted black Durabak.	$188

1150-0257	Recessed bumper double crosslay to hold of 200' of 1.75" DJ hose with pistol grip (raise lid an additional 1") in each crosslay. The crosslay floor/bottom shall be slotted to allow drainage (no slats). Includes hinged bi-fold raised lid in center with outboard fixed panels for optional equipment and polished stainless steel scuff guards at each side of crosslay opening across bottom and sides. Requires 28" extension, side covers, 12" heavy duty bumper and engineering approval.	$3,844
1150-0258	Recessed bumper double crosslay to hold of 200' of 1.75" DJ hose in each crosslay. The crosslay floor/bottom shall be slotted to allow drainage (no slats). Includes hinged bi-fold raised lid in center with outboard fixed panels for optional equipment and stainless steel rollers at each side of crosslay opening across bottom and sides. Requires 28" extension, side covers, 12" heavy duty bumper and engineering approval.	$3,999
1150-0259	Bumper tray full width of bumper (approx. 85") without slats 6" inches deep.	$878
1150-0260	Recessed bumper double crosslay to hold of 200' of 1.75" DJ hose in each crosslay. The crosslay floor/bottom shall be slotted to allow drainage (no slats). Includes full width hinged bi-fold raised lid and stainless steel scuff guards at each side of crosslay opening across bottom and sides. Requires 28" extension, side covers, 12" heavy duty bumper and engineering approval.	$4,260
1150-0263	Recessed bumper crosslay to hold of 150' of 1.75" DJ hose. The crosslay floor/bottom shall be slotted to allow drainage (no slats). Includes full width flat lid. Requires 20" extension, side covers and 10" heavy duty bumper.	$3,554
1150-0264	Recessed bumper double crosslay to hold 200' of 1.75" DJ hose in each crosslay with a nozzle as applicable. The crosslay floor/bottom shall be slotted to allow drainage (no slats). Includes hinged bi-fold full width raised lid for open full access to crosslays when open and stainless steel scuff guards at each side of crosslay opening across bottom and sides. Requires 28" extension, side covers, 12" heavy duty bumper and engineering approval. Lid shall be raised approx 5.25" above top of bumper for capacity to ensure ease of use with a nozzle. Lid to be secured in closed position with S/S Butterfly latches. Capacity may be affected and may require a compact nozzle depending on hose selection as loaded.	$4,052
1150-0269	Bumper tray to be constucted using 3/16" aluminum ipos.	$104
1150-0272	Raised lid over bumper tray to be extended over jumpline swivel on top of gravel shield. For use with 2" swivel only.	$61
1150-0273	Nylon black cargo net with black powder coated quick release buckles on sides for bumper crosslay.	$332
1150-0275	Hinged smooth plate lid for center bumper tray. Includes 1/4 turn latch and gas shock hold open. Smooth plate lid will be painted black Durabak.	$392
1150-0276	Nylon black strap with aluminum quick-release buckle. Location: driver, officer and (2) center top of front bumper gravel shield.	$471
1155-0000	Class III hitch for portable winch for the front.	$904
1155-0002	Winch, electric front mounted Ramsey 12,000 lb. Includes access door with quarter turn latch and spring hold open device.	$4,221
1155-0005	Winch, Warn Series 12, 12,000 lb. with 125' 3/8" plated cable. Includes access door with quarter turn latch and spring hold open device. Locate: Mounted to the chassis frame extension centered at the front bumper area.	$5,308
1155-0009	Winch, Warn 16.5ti, tow eye, front bumper, Wildland	$6,262
1155-0013	Winch, Warn Series 12, 12,000 lb. with 125' 3/8" plated cable. Includes access door, hinged rearward that is smooth plate alum (IPO tread) and painted with black Scorpion brand coating inside and outside surfaces (smooth finish). Latch to be D-Ring style (IPO std. 1/4 turn latch). Lid to have 1 gas shock.	$5,440
1155-0016	20,000lb Hydraulically Driven Winch. Ramsey Model H800R (Mfg.Part# 124410) Hydraulic Winch with Dow-Lok Clutch, roller guide assembly, minimum 200' of 5/8" Wire Rope Assembly, Winch Mounting Brackets, PTO and Hydraulic Pump. Maudlin to supply and install winch, E-One to complete installation.	$13,905
1155-0018	Winch, Warn Series 12-S Spydura Pro, 12,000 lb. with 100' of 7/16" synthetic rope and Hawse fairlead. Includes access door with quarter turn latch and spring hold open device.	$5,932
1160-0000	Bumper 10" stainless steel.	$1,320
1160-0002	Bumper reinforcement backing. For use with 10" SS or heavy duty bumpers only.	$468
1160-0004	Stainless Steel 10" high front bumper. Requires extended front bumper.	$1,319
1160-0008	3/16" Front Bumper Gravel Shield.	$134
1160-0012	12" Front Bumper Gravel Shield Extension.	$149
1160-0013	16" Front Bumper Gravel Shield Extension.	$285
1160-0014	20" Front Bumper Gravel Shield Extension.	$506
1160-0015	24" Front Bumper Gravel Shield Extension.	$670
1160-0016	28" Front Bumper Gravel Shield Extension.	$810
1160-0020	License plate holder mounted center of front bumper.	$41
1160-0032	1/8" diamond plate gravel shield. For use with Spartan extended front bumper.	$802
1160-0034	8" Front Bumper Extension.	$149
1160-0051	3/16" Front Bumper Gravel Shield. Smooth plate painted with black Durabak.	$1,389
1160-0053	14" Front Bumper Gravel Shield Extension.	$218
1160-0055	Guard straps for bumper mtd recessed Q2B - polished stainless steel.	$316
1160-0068	1/8" Front Bumper Gravel Shield. Smooth plate painted with black Durabak.	$1,389
1160-0082	Front bumper extension. For use with International 7000 Series 4x4 chassis. Total extension to be 20" including the OEM frame extension.	$506
1160-0088	Removable number plate with mounting brackets. Locate [#LOC]. Plate to be painted job color. Plate to be 12"W x 8"H. Lettering and/or graphics not included.	$271
1160-0089	Modify intergal Frame Ext, Navistar, 23 inch, Wildland	$766
1160-0091	Front Bumper, Navistar, repainted job color, Wildland	$1,006
1160-0092	3/16" ADT Bumper gravel shield, w/valve cut-out(s), Wildland	$1,153
1160-0094	18" Front Bumper Gravel Shield Extension.	$397

1160-0105	Removable number plate with mounting brackets. Locate [#LOC]. Plate to be painted lower job color (if cab is painted two tone). Plate to be 14"W x 8"H. Lettering and/or graphics not included.	$298
1160-0108	3/16" Front Bumper Gravel Shield. Smooth plate painted with black Scorpion coating.	$1,389
1160-0120	1/8" Front Bumper Gravel Shield. Includes 1" return break on each side of heavy duty bumper.	$164
1160-0121	Diamond plate lower gravelshield. Located under side of the front bumper extension.	$790
1160-0122	20" Front Bumper Gravel Shield Extension. The extension shall extend further forward and each side to align with the edge of the bumper.	$580
1160-0129	License plate holder hinge mounted below center of front bumper.	$81
1160-0131	1/8" Front Bumper Gravel Shield for heavy duty bumper. Includes 1" turn down around perimeter of HD bumper.	$221
1160-0132	Notch front bumper for low "S" type front intake. Tray below pipe extending from cab to bumper. Tray to hold 15' of 5" LDH. Include nylon strap (seat belt type) for tray.	$1,986
1160-0134	28" Front Bumper Gravel Shield Extension for recessed crosslay to be used on commercials only.	$2,890
1160-0138	3/16" Front Bumper Gravel Shield. Extend shield to flush with heavy duty bumper edge.	$550
1160-0139	20" Front Bumper Gravel Shield Extension for recessed crosslay to be used on commercials only.	$2,586
1160-0140	3/16" Front Bumper Gravel Shield for heavy duty bumper. Includes 1" turn down around perimeter of HD bumper.	$354
1160-0141	3/16" Front Bumper Gravel Shield with 1" turn down lips to protect the top edge of the heavy duty bumper from damage. Smooth plate painted with black Durabak.	$1,441
1160-0145	Notch front bumper for low "S" type front intake. 10" deep tray below pipe extending from cab to bumper to hold at minimum 25' of 5" LDH. Include nylon strap (seat belt type) for tray.	$1,986
1225-0012	Ward No Smoke Exhaust System.	$17,994
1225-0028	Exhaust modification. Wildland	$2,304
1225-0029	Exhaust end modification for Nederman. For exhaust extraction system. Exhaust to discharge at 45 degree angle from body. Wildland.	$97
1225-0030	Exhaust driver side terminating between L3/L4	$637
1225-0034	Exhaust officer side terminating rearward of R1 door below the 1.5" X 3" extrusion.	$637
1225-0054	Locate exhaust end 3" below rubrail extending 2" past rubrail.	$247
1250-0011	Rear underbody support frame.	$602
1250-0028	Rear heavy duty underbody support frame.	$1,606
1250-0057	Rear underbody support frame. SS product.	$602
1250-0074	Rear underbody support frame with side tow eye style frame brackets without lower tow eyes to minimize impact on departure angle. To be used with frame mounted tow eyes facing rearward from frame rails.	$1,029
1350-0000	Electric reprime diesel fuel pump. Not available on E-One custom chassis.	$745
1350-0002	Recessed fuel fill	$136
1350-0010	Fuel pick-up for generator or pump. Includes hoses run to generator compartment.	$142
1350-0016	Fuel Fill Package. Required on chassis with approved factory tank.	$379
1350-0023	Fuel cooler, to be routed from the discharge side of the pump to the chassis fuel line. Cooler to be functioning when the pump is in operation.	$482
1400-0011	Battery splash cover for ULC compliance.	$314
1400-0019	Special battery jumper stud location. Jumper studs to be located [#LOC].	$368
1400-0022	Battery Rollout Tray in Commercial Chassis in Deluxe Trim Package.	$710
1400-0037	Battery rollout tray in body compartment R1.	$710
1510-0035	Universal air pack bottle bracket (EA). Location: [#LOC].	$158
1510-0091	Zico Quic-Hold mechanical air pack bottle bracket (EA). Model QLM-U with adjustable footplate and pull release. Location: [#LOC].	$691
1510-0110	Bostrom Seating Package. Includes one (1) air ride driver seat, one (1) fixed SCBA officer seat and (3) fixed SCBA rear seats. Tradition.	$1,948
1510-0117	Bostrom SecureAll mechanical air pack bottle bracket (EA). Location: [#LOC].	$550
1510-0141	Seating Package Two (2) Door International. Includes One (1) National Brand air suspended driver seat and (1) National Brand air suspended officer seat.	$363
1510-0151	Universal air pack bottle bracket installed (EA).	$158
1510-0203	Bracket SCBA Lifeguard SmartDock Gen2 restraint system. Location: [#LOC].	$511
1510-0224	Bostrom seat package, Wildland, Option, Rear, (2) Hi-Back	$1,799
1510-0225	Seat base option Wildland, Option, Rear, (2) pull-out trays	$4,376
1510-0227	Zico Quic-Hold mechanical air pack bottle bracket (EA). Model QM-ROLO-SA with adjustable footplate and pull release.	$508
1510-0253	Bostrom SecureAll mechanical air pack bottle bracket (EA). SecureAll factory adjusted to accommodate carbon fiber bottle(s) in mounted location(s) as specified. Location: [#LOC].	$550
1510-0258	Zico EZ-LOC mechanical air pack bottle bracket (EA). Model QM-EZL with adjustable top clamp and footplate with center pull release for Bostrom seat. Location: [#LOC].	$608
1510-0271	Seating Package Two (2) Door International. Includes One (1) National Brand air suspended driver seat and (1) National Brand standard suspension officer seat.	$138
1510-0317	Zico EZ-LOC mechanical air pack bottle bracket (EA). Model QM-EZL-CPR with adjustable top clamp and adjustable footplate with center pull release for 911 seats. Location: [#LOC].	$687
1515-0056	Roof mtd A/C system Coleman Mach 8 15,000 BTU. Locate on rear cab roof wired to shore power and (if equipped w/auto transfer) generator.	$3,248
1535-0035	Engine compartment light, LED (EA).	$247
1535-0039	Medical cabinet. Locate center on rear wall (20" wide x 24" deep x 52" high). Includes (3) adjustable shelves and (1) vertically mounted incandescent light.	$2,884
1535-0040	Medical cabinet. Locate center on rear wall (20" wide x 21" deep x 52" high). Includes (3) adjustable shelves and (1) vertically mounted incandescent light.	$2,761

1535-0113	(2) Cabinets rear of commercial extended cab. Sized in height, width and depth as space within cab permits while allowing for installation requirements for a commercial chassis. Each cabinet to include (1) LED strip light mounted as applicable. Cabinets to be bolt-in and have zolatone grey interior and exterior finish.	$3,578
1535-0138	Lock box mounted in the driver side wheel well medical cabinet floor. 14X21X20 with a locking horizontally hinged door. Finish will match interior of cab.	$620
1535-0143	Lock box mounted on top of the rear wall medical cabinet. 14HX18WX12D with a locking horizontally hinged drop down door. Finish will match interior of cab.	$620
1535-0224	Lock box mounted in the driver side wheel well medical cabinet floor. 8X21X20 with a locking horizontally hinged door. Finish will match interior of cab.	$620
1535-0230	Lock box in rear wall medical cabinet; floor mounted. 12H X FW X 12D with a locking horizontally hinged drop down door. Finish will match interior of cab.	$620
1535-0246	Medical cabinet. Locate center on rear wall (20" wide x 24" deep x 52" high) with a locking roll-up door. Includes (3) adjustable shelves.	$2,884
1535-0254	Rubber floor matting on interior of all medical cabinet floors.	$207
1535-0273	Compartment dividers with rubber floor matting on interior of vista cabinet floor.	$260
1540-0002	Center console with map storage box.	$1,389
1540-0043	Floor Mounted Map Box Between Driver and Officer Seats of Commercial Chassis.	$2,455
1540-0044	Map Box with Large Storage Area and Cargo Net Cover.	$1,389
1540-0061	Map storage box constructed of 3/16" aluminum.	$1,501
1540-0074	Map storage box constructed of 1/8" aluminum. Map Box will include forward area for switching, center area will have an area to mount sirens, radios and other miscellanous items. Rear of this area will be a hinged door area for maps.	$1,501
1540-0101	The center console shall have an adjustable track mounted to the front of the console for joystick control mounting bracket.	$197
1550-0138	Door mounted Whelen M2 red super LED flashing lights (4). Locate lights on each cab door in the outboard position. Each individual light shall be activated by the corresponding cab door ajar circuit.	$1,155
1550-0173	Stainless steel trim on bottom edge of the over wheel cab compartment opening (ea). Vertical trim edge to be 3" tall.	$129
1550-0176	Door mounted Whelen 3SR00FRR red super LED flashing lights (4). Locate lights [#LOC]. Each individual light shall be activated by the corresponding cab door ajar circuit.	$747
1640-0017	Diamond plate trim package for a (2) door extended International 7500. Includes driver side and an officer side trim and stepping areas that will utilize pieces already supplied by the OEM. The rearward area below the extended cab will be formed diamond plate with support framing.	$2,420
1640-0021	Cab entrance steps, Navistar, open grating, Wildland	$2,580
1640-0022	Under cab compartments, stainless steel hinged doors, painted job color, Wildland	$5,157
1640-0034	Steps below rear cab door - CFR swing style (PR) painted black Durabak. Includes plunger stop to hold in the down position. Step to be centered below cab step.	$1,051
1670-0029	International West Coast heated mirrors with clearance lights and remote control.	$150
1675-0008	Step chassis off road type pair. Required on all medium duty 4x4 chassis for each cab door.	$448
1675-0015	Cab roof mounted diamond plate 3 sided light tower shield with 45 degree front slope.	$978
1675-0016	Cab roof mounted painted job color 3 sided light tower shield with 45 degree front slope.	$1,218
1675-0033	Chrome fire bell with eagle. Location: Officer's side of front bumper extension.	$1,430
1675-0052	Relocate commerical chassis batteries, location [#LOC].	$824
1675-0058	Chrome fire bell with gold eagle. Location: Officer's side of front bumper extension.	$1,506
1675-0073	Hose deflector pin to protect Q2B on front bumper extension.	$214
1675-0111	Pair of 24" handrails located just behind driver and officer front door one each side. Handrail to extend 6" lower than standard for 4x4 application.	$401
1675-0112	Pair of 24" handrails located just behind driver and officer rear door (ALS doors if equipped) one each side. Exterior handrail to extend 6" lower than standard for 4x4 application. Includes interior rubber grab handles on rear facing wall of driver and officer side wheel well risers.	$617
1675-0140	Cab roof mounted diamond plate 3 sided AC shield with 45 degree front slope.	$760
1675-0149	The battery charger receptacle mounting plate shall be fabricated using 3/16" aluminum smooth plate. It shall be painted to match cab two tone job colors and align with the paint break as mounted.	$144
1675-0154	The cab shall have trim plates made from diamond plate to overlay the existing commercial cab closeout panels below the doors left and right.	$402
1675-0157	The exterior lower rear of the commercial cab to have a diamond plate overlay. For use with a top mount application.	$170
1675-0164	Cab roof mounted painted job color 3 sided light tower shield with 45 degree front slope to match the height of the light tower in the bedded position (+1" -0").	$1,328
1675-0166	Cab roof mounted painted job color 3 sided light tower shield with 45 degree front slope. Located rearward on flat roof (non vista). Placement to allow 45 degree shield to be placed in normal vista rise location to allow cab to appear to have vista roof.	$1,324
1675-0169	Door single vertically hinged painted with Tri-Mark latch. Location(s): driver side canopy area of cab.	$952
1675-0184	Chrome fire bell with eagle. Location: Officer's side front cab corner.	$1,537
1675-0189	Door single vertically hinged painted with Tri-Mark latch. Location(s): officer side canopy area of cab.	$952
1675-0205	Drip pan for a ROM roll-up door (EA). Location(s): driver and officer side ALS door.	$172
1680-0008	Tow eyes front painted below bumper/cab (PR).	$274
1680-0009	Tow eyes front stainless steel below bumper / cab (PR).	$689
1680-0010	Tow eyes front stainless steel mounted in up position. Requires 16" minimum bumper extension on custom chassis and 18" minimum bumper extension on commercial chassis.	$689
1680-0011	Tow eyes rear below body, painted.	$632
1680-0012	Tow eyes rear frame painted.	$562

1680-0013	Tow hooks front stainless steel in down position. Requires extended bumper on commercial chassis. If Non-Extended bumper on Comm. Chassis, tow hooks are to be ordered with chassis.	$824
1680-0014	Tow hooks front stainless steel mounted up. Requires 12" minimum bumper extension on custom and commercial chassis.	$824
1680-0015	Trailer hitch Class III mounted rear.	$1,005
1680-0033	Rear Tow Shackles (Pair)	$277
1680-0042	Tow hooks front painted in the down position.	$284
1680-0060	Deluxe Trim Pkg 4DR Navistar.	$4,443
1680-0062	Deluxe Trim Pkg 2DR M2	$3,211
1680-0063	Diamond Plate Running Boards Ford.	$734
1680-0075	(3) way rear underbody receiver assembly. Includes rearward 9000 lb. winch receiver or Class III trailer receiver and (2) side facing 9000 lb. winch receivers- (1) each below rearward body compartments. Includes rearward tow eyes and electrical winch connections for each receiver.	$2,418
1680-0077	Front bumper 9K winch receiver. Includes electrical connection for portable winch application. Commercial chassis only.	$1,907
1680-0093	Tow eyes front stainless steel with 3" holes mounted in up position. Requires 16 inminimum bumper extension on custom chassis and 18 in minimum bumper extension on commercial chassis.	$929
1680-0094	Trailer hitch Class IV mounted rear.	$1,835
1680-0095	Side underbody 9K winch receivers. Includes (2) side facing- (1) each below rearward body compartments for portable winch with electrical connection for winch.	$1,612
1680-0096	Side underbody 9K winch receivers. Includes (2) side facing- (1) each below body compartment ahead of the rear wheels for portable winch with electrical connection for winch.	$1,612
1680-0104	OEM chassis step package for Freightliner M2 series. Includes mounting plate for the battery charger receptacle and air inlet.	$151
1680-0106	OEM chassis step package for International 4000 and 7000 series. Includes mounting plate for the battery charger receptacle and air inlet.	$160
1680-0107	Diamond plate trim package for a (2) door International. Includes a full length driver side and an officer side trim that will utilize pieces already supplied by the OEM.	$1,360
1680-0110	Chassis Trim Package for a (2) door Freightliner M2 series.	$1,360
1680-0111	Chassis Trim Package for a (4) door Freightliner.	$2,717
1680-0114	Diamond plate trim package for a (4) door International. Includes a full length driver side and a (2) piece officer side trim that will utilize pieces already supplied by the OEM.	$2,717
1680-0121	Under the body there shall be equipped with a pair of 12,000 lb receiver assemblies, each with a removable swivel hoist ring, or can be used with a Class III trailer hitch. One each side of apparatus. The receivers shall be locate in front of rear axle. Final location will depend on Engineering and driveline. 12v not included.	$3,529
1680-0122	Tow eyes rear below body painted. Eyes to be on edge pointing to rear.	$632
1680-0129	The commercial chassis to have seat belt and chassis pre-wiring for NFPA seating indicator and vehicle data recorder.	$497
1680-0144	Trailer hitch class V mounted rear. This hitch has under body support as needed.	$2,594
1680-0184	Existing chassis to be modified to match wheelbase and frame cut of order configuration.	$1,100
1680-0189	Tow eyes front painted mounted in up position. Requires 16" minimum bumper extension on custom chassis and 18" minimum bumper extension on commercial chassis.	$274
1680-0192	Forward facing under front bumper winch receiver. Includes lowered height for center bumper mounted tray depth and electrical connection for portable winch application. Commercial chassis only.	$1,901
1680-0193	Tow eyes rear below body stainless steel.	$2,089
1680-0194	Tow eyes front stainless steel through bumper / cab (PR).	$954
1680-0196	Tow eyes front painted through bumper / cab (PR).	$535
1680-0197	Diamond plate trim package for a (2) door 7400 4x4 with drivcer side vertical exhaust and driver side fuel tank. Includes a full length driver side and an officer side trim that will utilize pieces already supplied by the OEM.	$1,567
1680-0200	Diamond plate trim package for a (2) door International with driver's side fuel tank and Officer's side battery storage. Includes a full length driver side and an officer side trim that will utilize pieces already supplied by the OEM.	$1,360
1680-0208	Storm King Air And Fuel Line Wraps, Wildland	$3,041
1680-0209	Stainless steel air intake screens, HVAC and vents, Wildland	$416
1680-0210	Tow hooks, below front frame, painted, Wildland	$731
1680-0211	Rear tow eyes, painted steel, 3" diameter 3/4" plate, Wildland	$1,085
1680-0221	Under front bumper hose roller receiver. Commercial chassis only. Wildland	$354
1680-0227	Tow eyes front painted with 3" holes below bumper/cab (PR).	$689
1680-0231	Insta-chain tire chain installation. Requires pre-wire option located in Cab Electrical.	$2,888
1680-0236	Chassis Trim Package for a (2) door extended Freightliner.	$2,056
1680-0237	Deluxe Trim Package 2DR Extended Cab International.	$4,165
1680-0239	Tow eyes rear frame painted mounted low just above tailboard.	$562
1680-0244	(2) way rear underbody Class III hitch receiver. Includes Class III trailer receivers, (2) side facing- (1) each below rearward body compartments for portable winch receivers with electrical connection for winch.	$1,617
1680-0247	Trailer hitch Class III mounted rear, optmized mounting to be in a raised mounting position.	$1,005
1680-0252	OEM chassis step package for Kenworth Commercial Chassis. Includes mounting plate for the battery charger receptacle and air inlet.	$160
1680-0254	Officer side rear underbody Class III hitch receiver. Includes Class III trailer receiver, (1) officer side facing side for portable winch receiver with an electrical connection for winch.	$971
1680-0256	Cab windows to be power operated. Two (2) door International (International code 16WJU) Tradition.	$294
1680-0258	Insta-chain tire chain installation. Includes 12 chain sytem. Requires pre-wire option located in Cab Electrical.	$3,015

1680-0259	Diamond plate trim package for a (2) door Navistar. Includes Bustin stepping surfaces, a full length driver side and an officer side trim that will utilize pieces already supplied by the OEM. SS product only.	$1,360
1680-0260	Diamond plate trim package for a (4) door Navistar. Includes Bustin stepping surfaces, a full length driver side and a (2) piece officer side trim that will utilize pieces already supplied by the OEM. SS product only.	$2,717
1680-0261	Diamond plate trim package for a (2) door Freightliner. Includes Bustin stepping surfaces, a full length driver side and an officer side trim that will utilize pieces already supplied by the OEM. SS product only.	$1,360
1680-0267	Commercial chassis trim package upgrade to include smooth aluminum plate bolted in place on underside of gator grip over batteries.	$99
1680-0270	Smooth plate trim package with black durabak finish for a (4) door International. Includes a full length driver side and a (2) piece officer side trim that will utilize pieces already supplied by the OEM, will include modfication for booster reel(s).	$5,490
1680-0271	Tow eyes front painted through bumper / cab (PR). Eyes to be 1" thick material.	$535
1680-0272	Plumb Vogel lube system to On-Spot tire chains.	$205
1680-0278	Deluxe Trim Pkg 4DR Navistar with provision for booster reels.	$4,443
1680-0280	Diamond plate trim package for a (4) door International. Includes a full length driver and officer side trim package that will utilize pieces already supplied by the OEM.	$2,821
1680-0282	Tow eyes rear below body, painted. 1" thick material with 3" diameter hole staight down from chassis frame.	$754
1680-0283	Delux diamond plate trim package for (2) door International. Includes full length driver side and officer side trim.	$2,262
1680-0287	Tow eyes front painted bright silver through bumper / cab (PR).	$535
1680-0293	Tow hooks front painted in the outboard position.	$284
1680-0295	Trailer hitch Class I receiver mounted rear.	$614
1680-0297	Diamond plate trim package for a (2) door International 7600. Includes a full length driver side and an officer side trim that will utilize pieces already supplied by the OEM. To be used with body mounted batteries.	$1,360
1680-0298	Deluxe Trim Package to be used with 4 door Freightliner M2 series chassis.	$4,443
1680-0299	Trim Package to be used with 4 door Freightliner M2 series chassis.	$2,717
1680-0301	Cord connector. Daniel Woodhead 3 wire NEMA 5-20 straight blade male located for block heater routed to driver side battery box.	$160
1680-0304	Deluxe Trim Pkg 4DR Navistar with storage compartment on one side and provision for booster reel on the other side.	$4,443
1680-0305	Diamond plate trim package for a (2) door Peterbilt. Includes Bustin stepping surfaces, a full length driver side and an officer side trim that will utilize pieces already supplied by the OEM. SS product only.	$1,273
1680-0307	4-ply upper and lower radiator hose ipos.	$73
1680-0309	Muncie digital tachometer. Locate display in cab visible to driver.	$705
1685-0009	Chain for ignition key	$134
1685-0063	Medical glove box. Mount to rear area of engine cover. Includes slotted top for dispensing gloves without opening hinged lid. Box to be same color as interior of cab. Secure lid in closed position with small butterfly latch.	$265
1685-0070	Lanyard "Y" control. Chassis mounted air horn(s). Commercial chassis.	$169
1685-0073	Control lanyard Y type or dual single pull as applicable for air horns on a commercial chassis.	$259
1685-0137	Console Remote Control Panel between Driver and Officer for remote control Bumper Turret, Pump Control, and switchs.	$886
1685-0173	Main control console for Ford chassis. Locate in cab centered between driver and officer. Includes all in-cab controls/switching.	$619
1685-0180	On Scene Solutions Talon helmet holder (EA). Location: [#LOC].	$413
1685-0189	Identification plate GSA units. Located on inside of driver's door. Exact information and wording to be determined at time of final inspection. See specification.	$288
1685-0191	Diamond plate cover for battery charger/air compressor. Includes louvers for ventilation.	$231
1685-0195	Control lanyard to officer side and located over the officer side door opening with a single chain. For use with air horns. Commercial chassis only.	$259
1685-0206	Center control console. Locate in cab between driver and officer. Includes area for NFPA siren, electrical, and in-cab controls (as applicable) switching.	$1,676
1685-0211	Center control console. Locate in cab between driver and officer. Includes area for NFPA siren, electrical, and in-cab controls (as applicable) switching.	$2,166
1685-0215	Rear cab SCBA mounting brackets (2) with holders, Wildland.	$1,200
1685-0216	Rear Bench Seat Base Enclosure, Wildland, Navistar	$970
1685-0235	Foot switch Linemaster model 632S to control air horns located [#LOC]. Includes 25 degree diamond plate bracket.	$121
1685-0245	Main control console for Ford chassis. Locate in cab centered between driver and officer. Includes all in-cab controls/switching. Console to have a Zolatone gray finish.	$619
1685-0254	Storage box locking, mounted on the rear lower engine cover. Engine cover lock box measures 18x24x9 with a lift top lid and a locking latch. Finish will match cab interior.	$880
1685-0255	Center control console. Locate in cab between driver and officer. Includes area for NFPA siren, electrical, customer supplied radio cut-out and in-cab controls (as applicable) switching.	$1,676
1685-0264	A universal laptop mount, Havis model C-3090-3 shall be mounted to the center console. Ford commercial chassis. Requires 1685-0173 Ford center console.	$721
1685-0265	Smooth plate cover(s) for battery charger and air compressor. These cover's shall be painted to match cab interior and shall include louvers as required for ventilation.	$231
1685-0289	Foot switch Linemaster model 632S to control Q2B siren located [#LOC]. Includes 25 degree diamond plate bracket.	$121
1685-0294	Pre-wire for air horns, 2 floor mounted foot switches (1) driver side (1) officer side for International 4400.	$425

1685-0313	Smooth plate cover for battery charger. Includes louvers for ventilation. Cover to match cab interior.	$231
1685-0325	Center control console. Locate in cab between driver and officer. Includes free area for customer supplied equipment to be added. Locate no equipment or switches in this console, using instead locations in overhead as specified.	$1,676
1685-0328	Fold down computer tray bolted to the map box on officer's side.	$775
1685-0339	Lower exterior cab steps to be equipped with Bustin Industries Type M stainless steel overlay in lieu of Gator Grip. Includes (6) 3/4" drain holes on the lower steps.	$1,035
1685-0356	Writing surface cab dash finished same as cab interior. Location: Mount at final inspection.	$214
1685-0363	Locking seat riser door. Officer seat riser door is to include a Simplex model 9672C-20-260-41 combination lock with satin chrome finish and black trim ring. Not available with air or electric seats.	$375
1685-0371	Overhead console flange re-inforcement. Includes driver and officer side consoles.	$108
1685-0372	Map pocket rear cab console aluminum plate to match console finish.	$107
1685-0374	Stack-On model PS-514-12 gun safe. Location: centered on top of rear wall medical cabinet.	$323
1685-0377	Fixed back wall mounted swirled overlay. Overlay to be spaced off wall approx. half inch. Location(s): center rear wall of cab full height above seat support channel x engine cover width.	$273
1750-0019	Battery charger Super Smart 110 volt, 20 amp.	$427
1750-0021	Battery charger Kussmaul model 1200, 40 amp.	$717
1750-0022	Battery charger Kussmaul 40 amp model 1200 with air compressor.	$2,418
1750-0024	Auto-Eject receptacle inlet 20 amp located [#LOC] with a [#COL] cover.	$583
1750-0026	Clamshell controller mounted on officer's side of engine cover for the air horns.	$127
1750-0027	Control push-button switch officer dash for Q2B siren.	$97
1750-0029	Switch horn button two position DOT/air horn.	$101
1750-0030	Switch horn button two position DOT/electronic siren.	$101
1750-0031	Switch horn button two position DOT/Q2B.	$101
1750-0032	Switch horn button three position DOT/air horn/electronic siren.	$205
1750-0034	Switch, additional 12 volt/15 amp. Location and function: [#LOC].	$205
1750-0040	Battery charger Super Smart 220 volt 50 Hz, 20 amp.	$427
1750-0042	Horn button selector switch, 3-position DOT/ES/Q2B.	$205
1750-0047	The chassis shall be pre-wired for installation of tire chains.	$433
1750-0059	Receptacle inlet 20 amp with a [#COL] cover. Location: [#LOC].	$295
1750-0060	Auto transfer switch 120 volt. Includes 8 place breaker box. Allows interior receptacles to be powered by either shore power or generator.	$774
1750-0061	Control push-button switch officer dash for air horns.	$97
1750-0062	Control push-button switch officer dash for siren.	$97
1750-0063	Clamshell controller mounted on officer's side of engine cover for Q2B.	$127
1750-0064	Clamshell controller mounted on on officer's side of engine cover for electronic siren.	$127
1750-0071	Mount customer supplied antenna on cab roof. Location: [#LOC].	$178
1750-0072	12 VDC (or 24VDC) electrical outlet in the cab wired battery hot. Location: [#LOC].	$62
1750-0073	Antenna base Tessco P/N 90942 (NMO Motorola Style - also called MATM style) on cab roof. Location: [#LOC].	$96
1750-0082	12V power distribution module. Includes (6) battery hot and (6) switched hot circuits. 100 amps max (IATS). Location: [#LOC].	$317
1750-0084	Receptacle inlet 220 volt European "Schuko" style. Includes matching cord connector. Location: [#LOC]	$420
1750-0091	Battery Saver Kussmaul model 091-195-12 wired to battery charger receptacle.	$708
1750-0094	Battery charger / air compressor 220 volt Kussmaul Pump Plus HO.	$1,523
1750-0113	Dome Lts Red/White Incandescent. Package includes two lights mounted in the front of the cab. White light wire through door and light assembly mounted switch. Red light through light assembly mounted switch.	$286
1750-0114	Cab Headlights in addition to front quad headlights	$437
1750-0115	Master warning light switch to have a red cover (or bezel).	$39
1750-0117	Auto eject receptacle inlet 15 amp 240 volt with a [#COL] cover. Location: [#LOC].	$533
1750-0124	Whelen 4" round LED red door ajar light. Model 20R00FCR light with 2FLANGEC bezel.	$191
1750-0131	Pyrometer gauge in cab.	$582
1750-0132	Auto transfer switch for additional battery charge receptacle.	$468
1750-0144	Q2B brake switch to have a red cover (or bezel).	$39
1750-0149	Control push-button switch on officer's dash for Q2B siren brake.	$97
1750-0158	Dome Lts Red/White LED. Package includes two lights mounted in the front and two mounted in the rear of the cab. White light wired through door and light assembly switch. Red light through light assembly switch.	$824
1750-0160	Dome Lts Red/White Incandescent. Package includes two lights mounted in the front and two mounted in the rear of the cab. Front cab lights: White light wired through door and light assembly mounted switch. Red light through light assembly mounted switch. Rear cab lights: White light wired through door and switch on side cab interior wall. Red light through switch on side cab interior wall. Rear dome switches to be located between side window and door opening and control light on respective side of cab.	$976
1750-0162	Battery charger Kussmaul model 091-35/10, 35 amp battery charger / 10 amp battery saver.	$837
1750-0170	Commercial 4x4 headlight wiring for headlights below in/below the bumper in addition to factory headlights. Wire factory hood headlights to three (3) position switch labeled "Off Road Lights".	$473
1750-0173	Rocker switch cover (or bezel) to be red. Location: [#LOC].	$39
1750-0183	Wire Oil Pan Heater Provided by Commercial ChassisThrough Battery Charger Receptacle.	$202
1750-0185	Vernier engine throttle in cab for use with jet dump operations. Locate in driver side overhead console or Lower Dash. Includes selector sw also in overhead console or Lower Dash.	$926
1750-0186	Dome Lts Red/White Incandescent additional. White light wire through door and light assembly mounted switch. Red light through light assembly mounted switch. Location: Centered rear of cab.	$146

1750-0190	Dome Lts Red/White LED. Package includes two lights mounted in the front of the cab. White light wire through door and light assembly mounted switch. Red light through light assembly mounted switch.	$413
1750-0205	Handheld flashlight, orange Streamlight Vulcan flashlight with vehicle mount system. Location: [#LOC].	$262
1750-0222	12 volt electrical outlet in the cab wired through ignition. Location: [#LOC].	$62
1750-0224	Engine Compartment Light LED for Freightliner Chassis (EA).	$247
1750-0225	Engine Compartment Light for Freightliner Chassis (EA).	$132
1750-0230	Control Push Button Switch for Air Horns on Officers Side of Console.	$97
1750-0232	Incandescent Red/White domes and upper NFPA step lighting. Package includes two lights mounted in the front and two mounted in the rear of the cab. White light wire through door and light assembly mounted switch. Red light through light assembly mounted switch. Upper cab step areas to have for NFPA incandescent step lighting. Step lighting to be positioned per OEM recommendations for best compliance to NFPA.	$675
1750-0252	Kussmaul mounting plate model 091-9H for 12v air compressor.	$83
1750-0256	Auto eject block heater receptacle inlet 15amp with a [#COL] cover. Location: [#LOC].	$530
1750-0260	Battery charger, Super Smart, 20 amp with 120V Kussmaul HP air compressor.	$1,695
1750-0262	Auto transfer switch 120 volt. Includes 8 place breaker box. Allows interior receptacles to be powered by either shore power or generator. Ship to VanMor for installation.	$774
1750-0266	Dome Lts Red/White Incandescent. Package includes three lights mounted in the front of the cab. White light wire through door and light assembly mounted switch. Red light through light assembly mounted switch.	$390
1750-0284	Switch additional guarded toggle. Location and Function: [#LOC].	$205
1750-0308	Battery charging connector 12V Anderson with weatherproof cover. Includes mating connector (ship loose). Location: Driver's door step area.	$295
1750-0310	Clamshell controller mounted on officer's side of engine cover for Federal Signal Rumbler.	$127
1750-0314	Battery charger Kussmaul model 12 HO PIM, 20 amp. Includes model 091-189-12 indicator located adjacent to inlet receptacle.	$1,430
1750-0316	Switch horn button two position DOT/Rumbler.	$101
1750-0320	Conduit flexible .75" for radio installation distribution box to officer's overhead.	$307
1750-0325	Pigtail, minimum of 18" of wire for service of the battery charger and air compressor.	$49
1750-0326	Auto transfer switch 120 volt. Includes 2 place breaker box. Allows interior receptacles to be powered by either shore power or generator.	$753
1750-0328	Auto transfer switch 120 volt. Includes 8 place breaker box. Allows interior receptacles to be powered by either shore power or inverter.	$774
1750-0332	Dome lights Red/White incandescent. Package includes two lights mounted in the front and two mounted in the rear of the cab Trucklite 80 series with push style on/off button (may be used with Ford chassis). White light wire through door and light assembly mounted switch. Red light through light assembly mounted switch.	$570
1750-0333	Dome lights White incandescent. Package includes two lights mounted in the front and two mounted in the rear of the cab Trucklite 80 series with push style on/off button (may be used with Ford chassis). Lights wire through door and light assembly mounted switch.	$570
1750-0334	Dome lights White incandescent. Package includes two lights mounted in the front of the cab Trucklite 80 series with push style on/off button (may be used with Ford chassis). Lights wire through door and light assembly mounted switch.	$285
1750-0336	Whelen traffic advisor control head (model TRACTRL1A) shall be mounted in the center overhead panel. The control head shall be wired to the main power switching circuit. There shall be a 50' control cable (model TAPVC50) ran from the control head to the rear of the body, coiled up for dealer supplied and installed traffic advisor.	$1,025
1750-0337	Garmin GSP 18X USB. May be mounted at E-ONE discretion on the cab roof within reach of cab 12VDC hot outlet(s).	$250
1750-0342	Battery charger Kussmaul model 12 HO PIM, 20 amp. Includes model 091-189-12 indicator located behind driver's door adjacent to exterior handrail.	$1,430
1750-0343	Battery charger E-ONE LPC 20. 120 volt inlet, 20 amp output.	$614
1750-0344	Battery charger E-ONE LPC 40. 120 volt inlet, 40 amp output.	$934
1750-0353	Dome Lts Red/White LED. Package includes two lights mounted in the front and three mounted in the rear of the cab. White light wired through door and light assembly switch. Red light through light assembly switch.	$1,050
1750-0355	Each 110 volt cab receptacle shall have a dedicated breaker within the breaker box. This is to provide each cab mounted receptacle (single outlet, duplex, etc. as applicable) with its own isolated circuit.	$271
1750-0369	On-Spot activation switch shall have a red flip up safety guard. The switch shall de located on the driver side overhead panel offset to the officer side as far as possible.	$52
1750-0372	12 VDC (or 24VDC) electrical outlet in the cab wired battery hot with 14AWG at each seated position. Outlets are shared within the same circuit.	$246
1750-0390	Radio Poly-Planar AM/FM CD/MP3 with USB port located center overhead console offset to officer side.	$882
1750-0392	Battery charger Kussmaul 75 amp model 091-149-12 with 091-9 air compressor.	$3,581
1750-0394	Control push button switch for Q2B on officers side of console.	$97
1750-0396	Control push-button switch on officer's overhead for Q2B siren brake.	$97
1750-0399	Control push-button switch driver side of center dash upper tier for Q2B siren.	$97
1750-0405	Battery charger Kussmual model 091-200-12-194-WT-RD. 120 Volt 40 Amp output includes water tight display mounted adjacent to inlet.	$1,792
1750-0406	The air horn(s) shall not be included within the Multiplex system (separate switching from Multiplex display required).	$394
1750-0411	Dome Lts Red/White Whelen model 60CREGCS LED. Package includes two lights mounted in the front and four mounted in the rear of the cab. White light wired through door and light assembly switch. Red light through light assembly switch.	$1,697

1750-0412	Kussmaul digital battery display model 091-194-IND-WT-RD in place of standard.	$350
1750-0414	Warning light Whelen M6R series Linear Super LED (PR) red. Location: interior of canopy doors wired through each door ajar switch only.	$726
1750-0429	Dual USB charging ports in the cab wired battery hot. Location: [#LOC].	$70
1750-0433	Battery charger Kussmaul LPC 80. 120 volt inlet, 80 amp output.	$1,715
1750-0439	Dome Lt Red/White Whelen model 60CREGCS LED additional (EA). White light wired through door and light assembly switch. Red light through light assembly switch. Location: center rear crew cab ceiling.	$341
1750-0440	Switch horn button three position DOT/air horn/electronic siren. Wired through multiplex display screen.	$205
1750-0441	Battery charger Kussmaul model EV40, 40 amp.	$1,557
1750-0443	Dome Lts Red/White Whelen model 60CREGCS LED. Package includes two lights mounted in the front of the cab. White light wired through door and light assembly switch. Red light through light assembly switch.	$566
1750-0447	Dome Lts Red/White Whelen model 60CREGCS LED. Package includes two lights mounted in the front and two mounted in the rear of the cab. White light wired through door and light assembly switch. Red light through light assembly switch.	$1,132
1750-0453	Auto transfer switch 120 volt. Includes 12 place breaker box. Allows interior receptacles to be powered by either shore power or generator.	$815
1750-0454	Courtesy light for driver and officer located on front of risers wired through marker lights. Whelen model 0SR00SCR light.	$259
1750-0458	Quad bezels (4) black ipos.	$260
1750-0464	Dome Lt Red/White Whelen model 60CREGCS LED. One (1) light centered between driver/officer in the ceiling. White light wired through door and light assembly switch. Red light through light assembly switch.	$341
1750-0466	DEF level gauge adjacent to tank fill area.	$355
	BODY	
3090-0023	Body, Stainless Steel, 600 gallon integral tank, base, Wildland	$39,312
3090-0024	Body, stainless steel, 500 gallon integral tank option, Wildland	$37,978
3100-0000	Driver side body with full height 24" wide forward and 36" wide rearward compartmentation. Includes (1) 56" wide compartment over the wheel well.	$8,723
3100-0001	Driver side body with full height 30" wide forward and 36" wide rearward compartmentation. Includes (1) 56" wide compartment over the wheel well.	$9,332
3100-0002	Driver side body with full height 36" wide forward and 36" wide rearward compartmentation. Includes (1) 56" wide compartment over the wheel well.	$9,997
3100-0003	Driver side body with full height 42" wide forward and 42" wide rearward compartmentation. Includes (1) 56" wide compartment over the wheel well.	$10,684
3100-0004	Driver side body with full height 48" wide forward and 48" wide rearward compartmentation. Includes (1) 56" wide compartment over the wheel well.	$11,430
3100-0006	Driver side body with upper and lower compartmentation. Includes 24" wide forward and 36" wide rearward lower compartments and (3) opening upper compartments.	$9,159
3100-0007	Driver side body with upper and lower compartmentation. Includes 30" wide forward and 36" wide rearward lower compartments and (3) opening upper compartments.	$9,767
3100-0008	Driver side body with upper and lower compartmentation. Includes 36" wide forward and 36" wide rearward lower compartments and (3) opening upper compartments.	$10,420
3100-0009	Driver side body with upper and lower compartmentation. Includes 42" wide forward and 42" wide rearward lower compartments and (3) opening upper compartments.	$11,120
3100-0010	Driver side body with upper and lower compartmentation. Includes 48" wide forward and 48" wide rearward lower compartments and (3) opening upper compartments.	$11,867
3100-0011	Driver side body with upper and lower compartmentation. Includes 42" wide forward and 42" wide rearward lower compartments, (3) opening upper compartments with portable water tank storage with access door at rear.	$11,452
3100-0012	Driver side body with upper and lower compartmentation. Includes 48" wide forward and 48" wide rearward lower compartments, (3) opening upper compartments with portable water tank storage with access door at rear.	$12,223
3100-0013	Driver side body with full height 24" wide forward and 50" wide rearward extended compartmentation. Includes (1) 56" wide compartment over the wheel well.	$9,332
3100-0014	Driver side body with full height 30" wide forward and 50" wide rearward extended compartmentation. Includes (1) 56" wide compartment over the wheel well.	$9,945
3100-0015	Driver side body with full height 36" wide forward and 50" wide rearward extended compartmentation. Includes (1) 56" wide compartment over the wheel well.	$10,594
3100-0016	Driver side body with full height 42" wide forward and 56" wide rearward extended compartmentation. Includes (1) 56" wide compartment over the wheel well.	$11,294
3100-0017	Driver side body with full height 48" wide forward and 62" wide rearward extended compartmentation. Includes (1) 56" wide compartment over the wheel well.	$12,041
3100-0018	Driver side body with full height 24" wide forward and 50" wide rearward enhanced extended compartmentation. Includes (1) 56" wide compartment over the wheel well.	$9,613
3100-0019	Driver side body with full height 30" wide forward and 50" wide rearward enhanced extended compartmentation. Includes (1) 56" wide compartment over the wheel well.	$10,222
3100-0020	Driver side body with full height 36" wide forward and 50" wide rearward enhanced extended compartmentation. Includes (1) 56" wide compartment over the wheel well.	$10,873
3100-0021	Driver side body with full height 42" wide forward and 56" wide rearward enhanced extended compartmentation. Includes (1) 56" wide compartment over the wheel well.	$11,574
3100-0022	Driver side body with full height 48" wide forward and 62" wide rearward enhanced extended compartmentation. Includes (1) 56" wide compartment over the wheel well.	$12,320
3100-0024	Driver side body with full height 36" wide forward and 36" wide rearward compartmentation. Includes (1) 56" wide compartment over the wheel well.	$10,684

3100-0025	Driver side body with full height 42" wide forward and 42" wide rearward compartmentation. Includes (1) 56" wide compartment over the wheel well.	$11,430
3100-0026	Driver side body with full height 48" wide forward and 48" wide rearward compartmentation. Includes (1) 56" wide compartment over the wheel well.	$12,230
3100-0049	Driver side body with full height 24" wide forward and 36" wide rearward compartmentation. Includes (1) 56" wide compartment over the wheel well and 30 degree rear body angle for greater angle of departure.	$9,060
3100-0050	Driver side body with full height 30" wide forward and 36" wide rearward compartmentation. Includes (1) 56" wide compartment over the wheel well and 30 degree angle of departure.	$9,669
3100-0051	Driver side body with full height 36" wide forward and 36" wide rearward compartmentation. Includes (1) 56" wide compartment over the wheel well and 30 degree rear body angle for greater angle of departure.	$10,321
3100-0052	Officer half side body with 24" wide forward and 36" wide rearward compartmentation. Includes adjustable ladder tracks and 30 degree rear body angle for greater angle of departure.	$4,700
3100-0053	Officer half side body with 30" wide forward and 36" wide rearward compartmentation. Includes adjustable ladder tracks and 30 degree rear body angle for greater angle of departure.	$4,700
3100-0054	Stainless steel driver side body with full height 36" wide forward and 48" wide rearward compartmentation (interior). Includes (1) 60" wide compartment over the wheel well.	$10,982
3100-0055	Stainless steel driver side body with full height 48" wide forward and 48" wide rearward compartmentation (interior). Includes (1) 60" wide compartment over the wheel well.	$12,573
3100-0056	Stainless steel driver side body with full height 60" wide forward and 60" wide rearward compartmentation (interior). Includes (1) 60" wide compartment over the wheel well.	$13,455
3100-0059	Stainless steel driver side body with full height 48" wide forward and 60" wide rearward compartmentation (interior). Includes (1) 60" wide compartment over the wheel well.	$13,202
3100-0060	Stainless Steel officer half side body with 36" wide forward and 48" wide rearward compartmentation (interior). Includes adjustable ladder tracks.	$5,495
3100-0067	Driver side body with upper and lower compartmentation. Includes 60" wide forward and 42" wide rearward lower compartments and (3) opening upper compartments.	$12,697
3100-0068	Driver side body with upper and lower compartmentation. Includes 60" wide forward and 42" wide rearward lower compartments, (3) opening upper compartments with portable water tank storage with access door at rear.	$13,046
3100-0069	Driver side body with full height 60" wide forward and 42" wide rearward compartmentation. Includes (1) 56" wide compartment over the wheel well.	$12,230
3100-0074	Driver side body with full height 36" wide rearward compartmentation. Includes (1) 56" wide compartment over the wheel well.	$8,150
3100-0075	Driver side body with full height 36" wide rearward compartmentation. Includes (1) 56" wide compartment over the wheel well and 30 degree rear body angle for greater angle of departure.	$8,489
3100-0076	Stainless steel driver side body with full height 36" wide forward and 48" wide rearward compartmentation (interior). Includes (1) 60" wide compartment over the wheel well.	$10,982
3100-0077	Stainless steel driver side body with full height 48" wide forward and 48" wide rearward compartmentation (interior). Includes (1) 60" wide compartment over the wheel well.	$12,573
3100-0078	Stainless steel driver side body with full height 60" wide forward and 60" wide rearward compartmentation (interior). Includes (1) 60" wide compartment over the wheel well.	$13,455
3100-0080	Driver side body with full height 48" wide forward and 60" wide rearward compartmentation (interior). Includes (1) 60" wide compartment over the wheel well.	$13,202
3100-0082	Stainless steel driver side body with full height 24" wide forward and 48" wide rearward compartmentation (interior). Includes (1) 60" wide compartment over the wheel well.	$9,394
3100-0084	Stainless steel driver side body with full height 24" wide forward and 48" wide rearward compartmentation (interior). Includes (1) 60" wide compartment over the wheel well.	$9,394
3100-0085	Driver half side body with 24" wide forward and 36" wide rearward compartmentation.	$4,362
3100-0088	Officer half side stainless steel body with 36" wide forward and 48" wide rearward compartmentation (interior). Includes adjustable ladder tracks and brackets.	$5,495
3100-0089	Driver half side body with 42" wide forward and 42" wide rearward compartmentation.	$5,343
3100-0091	Driver side body with full height 60" wide forward and 56" wide rearward compartmentation. Includes (1) 56" wide compartment over the wheel well.	$13,087
3100-0092	Driver side body with full height 50" wide enhanced extended rearward compartmentation. Includes (1) 56" wide compartment over the wheel well.	$9,040
3100-0093	Driver side body with full height 24" wide forward and 36" wide rearward compartmentation. Includes (1) 56" wide compartment over the wheel well.	$8,723
3100-0094	Driver side body with full height 30" wide forward and 36" wide rearward compartmentation. Includes (1) 56" wide compartment over the wheel well.	$9,332
3100-0095	Driver side body with full height 36" wide forward and 36" wide rearward compartmentation. Includes (1) 56" wide compartment over the wheel well.	$9,997
3100-0096	Driver side body with full height 42" wide forward and 42" wide rearward compartmentation. Includes (1) 56" wide compartment over the wheel well.	$10,684
3100-0097	Driver side body with full height 48" wide forward and 48" wide rearward compartmentation. Includes (1) 56" wide compartment over the wheel well.	$11,430
3100-0098	Driver side body with upper and lower compartmentation. Includes 24" wide forward and 36" wide rearward lower compartments and (3) opening upper compartments.	$9,159
3100-0099	Driver side body with upper and lower compartmentation. Includes 30" wide forward and 36" wide rearward lower compartments and (3) opening upper compartments.	$9,767
3100-0100	Driver side body with upper and lower compartmentation. Includes 36" wide forward and 36" wide rearward lower compartments and (3) opening upper compartments.	$10,420
3100-0101	Driver side body with upper and lower compartmentation. Includes 42" wide forward and 42" wide rearward lower compartments and (3) opening upper compartments.	$11,120
3100-0102	Driver side body with upper and lower compartmentation. Includes 48" wide forward and 48" wide rearward lower compartments and (3) opening upper compartments.	$11,867

3100-0103	Driver side body with upper and lower compartmentation. Includes 42" wide forward and 42" wide rearward lower compartments, (3) opening upper compartments with portable water tank storage with access door at rear.	$11,452
3100-0104	Driver side body with upper and lower compartmentation. Includes 48" wide forward and 48" wide rearward lower compartments, (3) opening upper compartments with portable water tank storage with access door at rear.	$12,223
3100-0105	Driver side body with full height 24" wide forward and 50" wide rearward extended compartmentation. Includes (1) 56" wide compartment over the wheel well.	$9,332
3100-0106	Driver side body with full height 30" wide forward and 50" wide rearward extended compartmentation. Includes (1) 56" wide compartment over the wheel well.	$9,945
3100-0107	Driver side body with full height 36" wide forward and 50" wide rearward extended compartmentation. Includes (1) 56" wide compartment over the wheel well.	$10,594
3100-0108	Driver side body with full height 42" wide forward and 56" wide rearward extended compartmentation. Includes (1) 56" wide compartment over the wheel well.	$11,294
3100-0109	Driver side body with full height 48" wide forward and 62" wide rearward extended compartmentation. Includes (1) 56" wide compartment over the wheel well.	$12,041
3100-0110	Driver side body with full height 24" wide forward and 50" wide rearward enhanced extended compartmentation. Includes (1) 56" wide compartment over the wheel well.	$9,613
3100-0111	Driver side body with full height 30" wide forward and 50" wide rearward enhanced extended compartmentation. Includes (1) 56" wide compartment over the wheel well.	$10,222
3100-0112	Driver side body with full height 36" wide forward and 50" wide rearward enhanced extended compartmentation. Includes (1) 56" wide compartment over the wheel well.	$10,873
3100-0113	Driver side body with full height 42" wide forward and 56" wide rearward enhanced extended compartmentation. Includes (1) 56" wide compartment over the wheel well.	$11,574
3100-0114	Driver side body with full height 48" wide forward and 62" wide rearward enhanced extended compartmentation. Includes (1) 56" wide compartment over the wheel well.	$12,320
3100-0115	Driver side body with full height 36" wide forward and 36" wide rearward compartmentation. Includes (1) 56" wide compartment over the wheel well.	$10,684
3100-0116	Driver side body with full height 42" wide forward and 42" wide rearward compartmentation. Includes (1) 56" wide compartment over the wheel well.	$11,430
3100-0117	Driver side body with full height 48" wide forward and 48" wide rearward compartmentation. Includes (1) 56" wide compartment over the wheel well.	$12,230
3100-0118	Driver side body with full height 24in. wide forward and 36in. wide rearward compartmentation. Includes (1) 56in. wide compartment over the wheel well and 30 degree rear body angle for greater angle of departure.	$9,060
3100-0119	Driver side body with full height 30" wide forward and 36" wide rearward compartmentation. Includes (1) 56" wide compartment over the wheel well and 30 degree rear body angle for greater angle of departure.	$9,669
3100-0120	Driver side body with full height 36" wide forward and 36" wide rearward compartmentation. Includes (1) 56" wide compartment over the wheel well and 30 degree rear body angle for greater angle of departure.	$10,321
3100-0121	Stainless steel driver side body with full height 36" wide forward and 48" wide rearward compartmentation (interior). Includes (1) 60" wide compartment over the wheel well.	$10,982
3100-0122	Stainless steel driver side body with full height 48" wide forward and 48" wide rearward compartmentation (interior). Includes (1) 60" wide compartment over the wheel well.	$12,573
3100-0123	Stainless steel driver side body with full height 60" wide forward and 60" wide rearward compartmentation (interior). Includes (1) 60" wide compartment over the wheel well.	$13,455
3100-0124	Stainless steel driver side body with full height 48" wide forward and 60" wide rearward compartmentation (interior). Includes (1) 60" wide compartment over the wheel well.	$13,202
3100-0125	Driver side body with full height 60" wide forward and 42" wide rearward compartmentation. Includes (1) 56" wide compartment over the wheel well.	$13,087
3100-0126	Driver side body with upper and lower compartmentation. Includes 60" wide forward and 42" wide rearward lower compartments and (3) opening upper compartments.	$12,697
3100-0127	Driver side body with upper and lower compartmentation. Includes 60" wide forward and 42" wide rearward lower compartments, (3) opening upper compartments with portable water tank storage with access door at rear.	$13,046
3100-0128	Driver side body with full height 60" wide forward and 42" wide rearward compartmentation. Includes (1) 56" wide compartment over the wheel well.	$12,230
3100-0129	Driver side body with full height 36" wide rearward compartmentation. Includes (1) 56" wide compartment over the wheel well.	$8,150
3100-0130	Driver side body with full height 36" wide rearward compartmentation. Includes (1) 56" wide compartment over the wheel well and 30 degree rear body angle for greater angle of departure.	$8,489
3100-0131	Stainless steel driver side body with full height 36" wide forward and 48" wide rearward compartmentation (interior). Includes (1) 60" wide compartment over the wheel well.	$10,982
3100-0132	Stainless steel driver side body with full height 48" wide forward and 48" wide rearward compartmentation (interior). Includes (1) 60" wide compartment over the wheel well.	$12,573
3100-0133	Stainless steel driver side body with full height 60" wide forward and 60" wide rearward compartmentation (interior). Includes (1) 60" wide compartment over the wheel well.	$13,455
3100-0134	Stainless Steel Driver side body with full height 48" wide forward and 60" wide rearward compartmentation (interior). Includes (1) 60" wide compartment over the wheel well.	$13,202
3100-0135	Driver side body with full height 60" wide forward and 56" wide rearward compartmentation. Includes (1) 56" wide compartment over the wheel well. Top Mount eMAX Only.	$13,087
3100-0136	Driver side tunnel to hold: Lower section (3) Backboards. Upper section (1) Divider full length of tunnel, bolted at front of tunnel and held in place by a slot in the rear of tunnel for removability.	$621
3100-0137	Driver side compartment top storage box. Box to be smooth plate and painted job color with diamond plate top. Box to have a rear vertically hinged door with push-button latch. Box to have diamond plate lids with push button latches.	$1,853

3100-0138	Driver side body with upper and lower compartmentation. Includes 24" wide forward and 36" wide rearward lower compartments and (2) opening upper compartments.	$9,159
3100-0139	Compartment L1 to have rescue style interior compartment depth and height.	$1,481
3100-0140	Driver side 36"/48" assembly. Includes upper and lower compartments with diamond plate compartment top. Upper area is for storage of hardsuction rack (not included).	$12,219
3100-0143	Driver side body with full height 52" wide forward and 52" wide rearward compartmentation. Includes (1) 56" wide compartment over the wheel well.	$12,230
3100-0144	Driver side body with full height 36" wide forward and 50" wide rearward compartmentation. Includes (1) 56" wide compartment over the wheel well.	$10,873
3100-0145	Driver side body with full height 30" wide forward and 50" wide rearward compartmentation. Includes (1) 56" wide compartment over the wheel well.	$10,222
3100-0146	Driver side body with full height 24" wide forward and 50" wide rearward compartmentation. Includes (1) 56" wide compartment over the wheel well.	$9,613
3100-0148	Driver side body with full height 42" wide forward and 56" wide rearward compartmentation. Includes (1) 56" wide compartment over the wheel well.	$11,526
3100-0149	Driver side body with full height 36" wide forward and 42" wide rearward compartmentation. Includes (1) 56" wide compartment over the wheel well.	$11,430
3100-0152	Driver side body with full height 36" wide forward and 50" wide rearward enhanced extended compartmentation. Includes (1) 56" wide compartment over the wheel well.	$11,560
3100-0153	Driver side body with full height 42" wide forward and 56" wide rearward enhanced extended compartmentation. Includes (1) 56" wide compartment over the wheel well.	$12,307
3100-0154	Driver side body with full height 48" wide forward and 62" wide rearward enhanced extended compartmentation. Includes (1) 56" wide compartment over the wheel well.	$13,108
3100-0155	Driver side body with full height 60" wide forward and 56" wide rearward enhanced extended compartmentation. Includes (1) 56" wide compartment over the wheel well.	$13,965
3100-0156	Driver side body with full height 30" wide forward and 36" wide rearward compartmentation. Includes (1) 56" wide compartment over the wheel well. Front and rear compartment opening height to be 66.75" high.	$9,990
3100-0159	Driver side body with full height 42" wide forward and 56" wide rearward enhanced extended compartmentation. Includes (1) 56" wide compartment over the wheel well and one (1) storage tunnel and access door at rear.	$15,141
3100-0160	Driver side body with full height 30" wide forward and 50" wide rearward enhanced extended compartmentation. Includes (1) 56" wide compartment over the wheel well.	$10,865
3100-0162	2-Arm Ladder Rack. The ladder rack includes amber lights on each end to visually indicate when the rack is in motion. Ladder rack to hold storage box with (1) vertically hinged rearward and (2) horizontally hinged outboard (when ladder rack in the down position) diamond plate doors with push button latches. The outboard horizontally hinged door(s) to have chains set to open at approx 160 degrees. Forward section of the box to hold (2) backboards and the rearward section to hold (1) stokes basket.	$17,937
3100-0163	Driver side body with full height 50" wide forward and 50" wide rearward enhanced extended compartmentation. Includes (1) 56" wide compartment over the wheel well.	$12,307
3100-0164	Driver side body with full height 56" wide forward and 56" wide rearward enhanced extended compartmentation. Includes (1) 56" wide compartment over the wheel well.	$13,108
3100-0165	Driver side body with full height 62" wide forward and 62" wide rearward enhanced extended compartmentation. Includes (1) 56" wide compartment over the wheel well.	$13,905
3100-0166	Driver side tunnel to hold: [#LOC].	$621
3100-0167	Driver side body with full height 62" wide forward and 62" wide rearward enhanced extended compartmentation. Includes (1) 56" wide compartment over the wheel well.	$13,072
3100-0168	Driver side body with full height 30" wide forward and 50" wide rearward enhanced extended compartmentation. Includes (1) 56" wide compartment over the wheel well. Rear compartment to be pumper style enhanced extended (shallow upper and deep lower compartmentation).	$12,666
3100-0170	Driver side body with 62" wide full height forward enhanced extended compartment, 36" wide half height second forward compartment and 50" wide half height rearward compartmentation.	$18,015
3100-0171	Driver side body with full height 24" wide forward and 50" wide rearward extended compartmentation. Includes (1) 33" wide compartment over the wheel well and (1) Zico Overhead Ladder Rack.	$15,696
3100-0172	Driver side body with full height 24" wide forward and 56" wide rearward extended compartmentation. Includes (1) 56" wide compartment over the wheel well.	$10,179
3100-0173	Driver side body with full height 24" wide forward and 50" wide rearward enhanced extended compartmentation. Includes (1) 56" wide compartment over the wheel well. Rear compartment to be pumper style enhanced extended (shallow upper and deep lower compartmentation).	$13,458
3100-0174	Driver side body with upper and lower compartmentation. Includes 36" wide forward and 50" wide rearward extended lower compartments and (3) opening upper compartments.	$15,303
3100-0175	Driver side body with full height 36" wide forward and 36" wide rearward compartmentation. Includes (1) 56" wide compartment over the wheel well and one (1) storage tunnel.	$13,516
3100-0176	Driver side body with full height 36" wide forward and 50" wide rearward enhanced extended compartmentation. Includes (1) 56" wide compartment over the wheel well and one (1) storage tunnel.	$14,393
3100-0177	Driver side body with full height 42" wide forward and 42" wide rearward compartmentation. Includes (1) 56" wide compartment over the wheel well and one (1) storage tunnel.	$14,263
3100-0178	Driver side body with full height 42" wide forward and 56" wide rearward enhanced extended compartmentation. Includes (1) 56" wide compartment over the wheel well and one (1) storage tunnel.	$15,141
3100-0179	Driver side body with full height 48" wide forward and 48" wide rearward compartmentation. Includes (1) 56" wide compartment over the wheel well and one (1) storage tunnel.	$15,063
3100-0180	Driver side body with full height 48" wide forward and 62" wide rearward enhanced extended compartmentation. Includes (1) 56" wide compartment over the wheel well and one (1) storage tunnel.	$15,941

3100-0181	Driver side body with full height 60" wide forward and 42" wide rearward compartmentation. Includes (1) 56" wide compartment over the wheel well and one (1) storage tunnel.	$15,921
3100-0182	Driver side body with full height 60" wide forward and 56" wide rearward enhanced extended compartmentation. Includes (1) 56" wide compartment over the wheel well and one (1) storage tunnel.	$16,795
3100-0185	Driver side body with full height 20" wide forward and 50" wide rearward extended compartmentation. Includes (1) 56" wide compartment over the wheel well.	$9,126
3100-0187	Stainless steel driver side body with full height 30" wide forward and 40" wide rearward compartmentation. Includes (1) 54" wide compartment over the wheel well.	$24,397
3100-0188	Stainless steel driver side body with full height 40" wide forward and 40" wide rearward compartmentation. Includes (1) 54" wide compartment over the wheel well.	$25,749
3100-0189	Stainless steel driver side body with full height 48" wide forward and 40" wide rearward compartmentation. Includes (1) 54" wide compartment over the wheel well.	$26,494
3100-0190	Stainless steel driver side body with full height 30" wide forward and 58" wide rearward enhanced extended compartmentation. Includes (1) 54" wide compartment over the wheel well.	$25,286
3100-0191	Stainless steel driver side body with full height 40" wide forward and 58" wide rearward enhanced extended compartmentation. Includes (1) 54" wide compartment over the wheel well.	$26,638
3100-0192	Stainless steel driver side body with full height 48" wide forward and 58" wide rearward enhanced extended compartmentation. Includes (1) 54" wide compartment over the wheel well.	$27,385
3100-0194	Stainless steel driver side body with full height/full depth 48" wide forward and 40" wide rearward compartmentation. Includes (1) 54" wide compartment over the wheel well.	$26,494
3100-0195	Driver 3/4 side body with full height 36" wide forward and 36" wide rearward compartmentation. Includes (1) 56" wide compartment over the wheel well.	$6,240
3100-0196	Driver half side body with (2) forward compartments (48" and 30" wide) and one rearward area for locating of side tank dump.	$4,865
3100-0197	Driver half side body with (2) forward compartments (48" and 30" wide) and (1) rearward compartment (24").	$5,725
3100-0198	Driver 3/4 side body with (2) lower forward compartments (48" and 30" wide), (3) upper compartments (54") and one lower rearward area for locating of side tank dump.	$6,728
3100-0199	Driver 3/4 side body with (2) lower forward compartments (48" and 30" wide), (3) upper compartments (54") and (1) lower rearward compartment (24").	$7,582
3100-0201	Driver full height side body with (2) lower forward compartments (48" and 30" wide), (3) upper compartments (54") and one lower rearward area for locating of side tank dump.	$8,592
3100-0202	Driver full height side body with (2) lower forward compartments (48" and 30" wide), (3) upper compartments (54") and (1) lower rearward compartment (24").	$9,447
3100-0203	Driver full height side body with (2) full height, rescue style, forward compartments (48" and 30" wide), (1) upper compartment (61" and offset rearward of the rack opening) and one lower rearward area for locating of side tank dump.	$8,592
3100-0204	Driver full height side body with (2) full height, rescue style, forward compartments (48" and 30" wide), (1) upper compartment (61" and offset rearward of the rack opening) and (1) lower rearward compartment (24").	$9,447
3100-0207	Driver full height side body with (2) lower forward compartments (48" and 30" wide), (3) upper compartments (54") with rear compartment face access door for portable tank storage and one lower rearward area for locating of side tank dump.	$9,950
3100-0208	Driver full height side body with (2) lower forward compartments (48" and 30" wide), (3) upper compartments (54") with rear compartment face access door for portable tank storage and (1) lower rearward compartment (24").	$10,803
3100-0209	Driver side body with full height 24" wide forward and 50" wide rearward enhanced extended compartmentation. Includes (1) 56" wide compartment over the wheel well.	$10,171
3100-0210	Driver full height side body with (2) full height, rescue style, forward compartments (48" and 30" wide), (2) upper compartment (40" wide) and (1) lower rearward compartment (24").	$9,447
3100-0211	Driver full height side body with (2) full height, rescue style, forward compartments (48" and 30" wide), (2) upper compartments (40" wide) and one lower rearward area for locating of side tank dump.	$8,592
3100-0212	(1) driver side roof top compartments with extra width to inboard side. Includes hinged raised compartment lid with turn latches, grab handle(s) and gas shock hold open and drain line(s) ran to below body. The lid to have (1) bracket mounted LED light and to be wired to door ajar indicator in cab.	$5,306
3100-0213	Stainless steel driver side body with full height 48" wide forward and 48" wide rearward compartmentation. Includes (1) 54" wide compartment over the wheel well.	$27,295
3100-0214	Stainless steel driver side body with full height 54" wide forward and 54" wide rearward compartmentation. Includes (1) 54" wide compartment over the wheel well.	$28,273
3100-0215	Stainless steel driver side body with full height 60" wide forward and 60" wide rearward compartmentation. Includes (1) 54" wide compartment over the wheel well.	$29,252
3100-0216	Compartment L1 to be 48.75" high in full depth lower area due to pipe routing for deck gun in hosebed storage pan.	$560
3100-0219	Driver half side body with 42" wide forward and 42" wide rearward compartmentation. Includes adjustable ladder tracks.	$5,343
3100-0220	Overhead Ladder Rack to be offset forward includes shifting compartment (rearward) over the wheel well.	$591
3100-0221	Driver half side tandem body with 30" wide forward and 30" wide rearward compartmentation.	$7,300
3100-0222	Driver half side tandem body with 42" wide forward and 42" wide rearward compartmentation.	$7,974
3100-0223	Driver half side tandem body with 60" wide forward and 54" wide rearward compartmentation.	$8,750
3100-0224	Driver 3/4 side tandem body with full height 30" wide forward and 30" wide rearward compartmentation. Includes (2) 51.5" wide compartments over the wheel well.	$8,453
3100-0225	Driver 3/4 side tandem body with full height 42" wide forward and 42" wide rearward compartmentation. Includes (2) 51.5" wide compartments over the wheel well.	$9,295

3100-0226	Driver 3/4 side tandem body with full height 60" wide forward and 54" wide rearward compartmentation. Includes (2) 51.5" wide compartments over the wheel well.	$10,262
3100-0227	Driver side tandem body with upper and lower compartmentation. Includes 30" wide forward and 30" wide rearward compartments and (4) opening upper compartments.	$12,384
3100-0228	Driver side tandem body with upper and lower compartmentation. Includes 42" wide forward and 42" wide rearward compartments and (4) opening upper compartments.	$13,737
3100-0229	Driver side tandem body with upper and lower compartmentation. Includes 60" wide forward and 54" wide rearward compartments and (4) opening upper compartments.	$15,313
3100-0230	Driver side tandem body with upper and lower compartmentation. Includes 30" wide forward and 30" wide rearward compartments and (4) opening upper compartments. Includes overhead rack opening centered between upper compartments.	$12,878
3100-0231	Driver side tandem body with upper and lower compartmentation. Includes 42" wide forward and 42" wide rearward compartments and (4) opening upper compartments. Includes overhead rack opening centered between upper compartments.	$14,285
3100-0232	Driver side tandem body with upper and lower compartmentation. Includes 60" wide forward and 54" wide rearward compartments and (4) opening upper compartments. Includes overhead rack opening centered between upper compartments.	$15,925
3100-0233	Driver side tandem body with full height 30" wide forward and 30" wide rearward compartmentation. Includes (2) 51.5" wide compartments over the wheel well.	$11,950
3100-0234	Driver side tandem body with full height 42" wide forward and 42" wide rearward compartmentation. Includes (2) 51.5" wide compartments over the wheel well.	$13,301
3100-0235	Driver side tandem body with full height 60" wide forward and 54" wide rearward compartmentation. Includes (2) 51.5" wide compartments over the wheel well.	$14,846
3100-0236	Driver side tandem body with full height 30" wide forward and 30" wide rearward compartmentation. Includes (2) 42" wide compartments over the wheel well and overhead rack opening centered between upper compartments.	$12,426
3100-0237	Driver side tandem body with full height 42" wide forward and 42" wide rearward compartmentation. Includes (2) 42" wide compartments over the wheel well and overhead rack opening centered between upper compartments.-	$13,832
3100-0238	Driver side tandem body with full height 60" wide forward and 54" wide rearward compartmentation. Includes (2) 42" wide compartments over the wheel well and overhead rack opening centered between upper compartments.	$15,440
3100-0243	Driver side body with full height 42" wide forward and 50" wide rearward compartmentation. Includes (1) 56" wide compartment over the wheel well.	$11,199
3100-0244	Driver half side tandem body with with 42" wide forward and one rearward area for locating of side tank dump rearward of the wheel well.	$8,254
3100-0245	Driver side body with full height 60" wide forward and 56" wide rearward compartmentation. Includes (1) 56" wide compartment over the wheel well. Side Mount eMAX only.	$13,087
3100-0246	Driver side body with upper and lower compartmentation. Includes 36" wide forward and 31" wide rearward lower compartments and (2) opening upper compartments.	$10,420
3100-0247	Driver side body with full height 46" wide forward and 56" wide rearward enhanced extended compartmentation. Includes (1) 56" wide compartment over the wheel well. L1 compartment to be Rescue Pumper style individual compartments.	$13,665
3100-0251	Driver side body with full height 60" wide forward and 42" wide rearward compartmentation. Includes (1) 33" wide compartment over the wheel well and (1) Zico Overhead Portable Tank Rack. Rack to hold (1) 3000 gallon portable tank.	$18,240
3100-0252	Driver side body with full height 42" wide forward and 56" wide rearward enhanced extended compartmentation. Includes (1) 56" wide compartment over the wheel well.	$12,865
3100-0253	Driver full height side body with (3) full height, rescue style, forward compartments (39" and 39" wide and rearward of wheel well 24" wide),(1) upper compartment over the wheel well 56" wide.	$9,526
3100-0254	Driver side body with upper and lower compartmentation. Includes 48" wide forward and 62" wide enhanced extended rearward lower compartments and (3) opening upper compartments.	$12,955
3100-0255	Driver side body with full height 42" wide forward and 56" wide rearward enhanced extended compartmentation. Includes (1) 33" wide compartment over the wheel well and (1) Zico Overhead Ladder Rack.	$19,116
3100-0256	Zico ladder rack to be tested. After testing ladder rack to be disassembled and repackaged for shipping.	$414
3100-0257	Driver side body with full height 36" wide forward and 50" wide rearward enhanced extended compartmentation. Includes (1) 33" wide compartment over the wheel well and (1) Zico Overhead Ladder Rack.	$17,236
3100-0259	Driver side diamond plate roof top compartment. Includes smooth plate painted vertical hinged access door at the rear with push button latch to be wired to door ajar indicator in cab.	$1,545
3100-0260	Driver side body with full height 36" wide forward and 45" wide rearward compartmentation. Includes (1) 56" wide compartment over the wheel well.	$11,475
3100-0261	Driver side body with full height 19.5" wide forward and 31" wide rearward compartmentation. Includes (1) 40" wide compartment over the wheel well.	$9,613
3100-0262	Driver side body with full height 32" wide forward and 50" enhanced extended rearward compartmentation. Includes (1) 56" wide compartment over the wheel well.	$9,045
3100-0263	Driver side body with full height 54" wide forward and 48" wide rearward compartmentation. Includes (1) 56" wide compartment over the wheel well. Side Mount eMAX only.	$12,267
3100-0264	Driver side body with full height 26" and 56" wide forward compartments and 56" wide rearward compartmentation. Includes (1) 56" wide compartment over the wheel well. Side Mount eMAX only.	$14,451
3100-0265	Driver side diamond plate roof top compartment. Includes (2) hinged lift-up access doors with turn latches and grab handle(s) and (1) vertical hinged access door at the rear with push button latch to be. Each lid to have (1) bracket mounted LED light and to be wired to door ajar indicator in cab.	$2,225

3100-0266	Driver side body with full height/full depth 60" wide front and 54" wide rear compartment. Includes (1) 60" wide compartment over the wheel well. Side mount SS eMAX only.	$15,967
3100-0267	Driver side tandem body with upper and lower compartmentation. Includes 60" wide forward and 54" wide rearward compartments and (1) opening forward upper compartment with painted panels rearward.	$16,388
3100-0270	Rear aluminum smooth plate painted job color vertical hinged door on driver side roof top compartments. Includes thumb latch and wiring for door ajar switch.	$213
3100-0273	Driver side ERV style roof top compartment contents: (2) 6" x 10' hard suction hoses (not included) stored vertical. Includes vertical partition around hard suction hoses.	$1,056
3100-0274	Driver side body with full height 36" wide forward and 56" wide rearward enhanced extended compartmentation. Includes (1) 56" wide compartment over the wheel well. Rescue Pumper individual style compartments.	$13,607
3100-0275	Driver side tandem body with upper and lower compartmentation. Includes 30" wide forward and 54" wide rearward compartments and (4) opening upper compartments. Includes offseting upper compartments forward due to deck gun location and access panel on upper rear compartment face to deck gun piping.	$13,745
3100-0276	(1) driver side roof top compartment forward of hard suction storage area and (2) roof top comaprtments over hard suction storage area. Includes hinged raised compartment lids with turn latches and grab handle(s). The lids to have (1) bracket mounted LED light and to be wired to door ajar indicator in cab. Includes partition between roof top compartment and hard suction storage area. Floor to be provided above the hard suction storage area to use remaining area above.	$2,926
3100-0277	Driver side tandem body with 60" wide forward and 54" wide rearward compartmentation. Forward compartment to be full height, rearward to be half height.	$10,782
3100-0278	Driver side body with full height 26" and 56" wide forward compartments and 56" wide rearward compartmentation. Includes (1) 56" wide compartment over the wheel well and one (1) storage tunnel. Side Mount eMAX only.	$17,249
3100-0279	Driver side body with full height 54" wide forward and 36" wide rearward compartmentation. Includes (1) 56" wide compartment over the wheel well. Side Mount eMAX only.	$11,836
3100-0281	Driver side body with full height 36" wide forward and 36" wide rearward compartmentation. Includes (1) 56" wide compartment over the wheel well and 30 degree rear body angle for greater angle of departure. L1 compartment to be Rescue Pumper style individual compartments.	$11,801
3100-0283	Driver half side body with (2) forward compartments (48" and 30" wide) and one rearward area for locating of side tank dump. Includes (1) 20" wide compartment above the lower forward comaprtment.	$5,342
3100-0285	Driver side tandem body with full height 42" wide forward and 59" wide rearward compartmentation. Includes (2) 51.5" wide compartments over the wheel well.	$15,134
3100-0287	Driver side body with 19.5" wide forward and 31" wide rearward compartmentation. Includes (1) 40" wide compartment over the wheel well.	$9,613
3100-0288	Stainless steel driver side body with full height 54" wide front and 54" rear with reduced upper depth for "T" tank. Includes 54" wide compartment over rear wheels.	$27,719
3100-0289	Stainless steel driver side body with full height 48" wide forward and 70" wide rearward enhanced extended compartmentation. Includes (1) 54" wide compartment over the wheel well.	$29,438
3100-0290	Driver side body with full height 48" wide forward and 48" wide rearward compartmentations. Includes (1) 56" wide compartment over the wheel well and one (1) storage tunnel. Tunnel to be behind L2 and L3 compartments only. L1 compartment to be full depth, full height with notch in upper rearward wall and boxed in cover for hard suction.	$16,570
3100-0291	Driver side body with full height 48" wide forward and 48" wide rearward compartmentation. Includes (1) 56" wide compartment over the wheel well and one (1) storage tunnel. Tunnel to be behind L2 and L3 compartments only. L1 compartment to be full depth, full height with notch in upper rearward wall and boxed in cover for hard suction.	$16,575
3100-0292	Stainless steel driver side body high side 60" front and 60" rear. Five compartments, tandem axle. For use with single arm overhead portable tank rack.	$18,427
3100-0293	Driver side tandem body with upper and lower compartmentation. Includes 30" wide forward and 54" wide rearward compartments and (4) opening upper compartments. Includes offseting upper compartments forward due to deck gun location and access panel on upper rear compartment face to deck gun piping.	$13,745
3100-0294	Driver side standard width roof top compartment contents: (2) 6" x 10' hard suction hoses (not included) stored vertical. The hard suction storage shall have a front wall which will prevent the hoses from sliding too far forward while also creating a full depth coffin storage area forward of the wall..	$335
3100-0295	Driver side body with full height 26" and 56" wide forward compartments and 56" wide rearward compartmentation. Includes (1) 56" wide compartment over the wheel well.	$14,451
3100-0296	Driver side body with full height 26" and 56" wide forward compartments and 56" wide rearward compartmentation. Includes (1) 56" wide compartment over the wheel well and one (1) storage tunnel.	$17,249
3100-0298	Stainless steel driver side short Boston style body with low height 36" front and 40" rear and (2) lift-up doors above. Includes 60" wide fender panel. For use with optional suicide hinged L1 door.	$26,783
3100-0299	Driver side tandem body with full height (1) 60" wide forward and (1) 60" wide rearward compartmentation. For use with Rear Mount pump.	$18,379
3100-0300	Driver side body with full height/full depth 60" wide front and 54" wide rear compartment. Includes (1) 60" wide compartment over the wheel well. Top mount SS eMAX only.	$15,967
3100-0301	Stainless steel driver side body with full height 60" wide forward and 60" wide rearward compartmentation. Includes (1) 54" wide compartment over the wheel well.	$32,458
3100-0302	Stainless steel driver side body with full height 48" wide forward and 58" wide rearward enhanced extended compartmentation. Includes (1) 60" wide compartment over the wheel well.	$28,410

3100-0304	Driver side tandem body with (2) 34" wide forward and 54" wide rearward compartmentation. Forward compartments to be full height, rearward to be half height.	$12,012
3100-0305	(1) driver side roof top compartment (no divider). Includes (2) hinged raised compartment lids with turn latches and grab handle(s). Each lid to have (1) bracket mounted LED light and to be wired to door ajar indicator in cab.	$2,655
3100-0306	(2) driver side roof top compartments with removable floors and extra width to inboard side. Includes hinged raised compartment lids with turn latches, grab handle(s) and gas shock hold open and drain line(s) ran to below body. Each lid to have (1) bracket mounted LED light and to be wired to door ajar indicator in cab.	$6,619
3100-0307	(2) Driver side roof top compartments. Includes hinged raised aluminum smooth plate with black Scorpion coating (IPOS diamond plate) compartment lids with turn latches and grab handle(s). Each lid to have (1) bracket mounted LED light and to be wired to door ajar indicator in cab.	$2,994
3100-0308	Driver side body with full height 60" wide forward and 54" wide rearward compartmentation. Includes (1) 60" wide compartment over the wheel well. Top mount SS eMAX only.	$19,422
3100-0309	Driver side body with full height 30" and 60" wide forward compartments and 54" wide rearward compartmentation. Includes (1) 60" wide compartment over the wheel well. Side mount SS eMAX only.	$17,631
3100-0310	Driver side body with full height 30" and 60" wide forward compartments and 54" wide rearward compartmentation. Includes (1) 60" wide compartment over the wheel well, and a storage tunnel. Side mount SS eMAX only.	$21,044
3100-0311	Driver side body with full height 30" and 60" wide forward compartments and 54" wide rearward compartmentation. Includes (1) 60" wide compartment over the wheel well. Top mount SS eMAX only.	$17,631
3100-0312	Driver side body with full height 30" and 60" wide forward compartments and 54" wide rearward compartmentation. Includes (1) 60" wide compartment over the wheel well, and a storage tunnel. Top mount SS eMAX only.	$21,044
3100-0313	Driver side body with full height 50" wide forward and 42" wide rearward compartmentation. Includes (1) 56" wide compartment over the wheel well. Rear perimeter or body raised 3" for improved departure angle. Side Mount eMAX only.	$11,836
3100-0314	Driver full height side body with upper and lower compartmentation. Includes 42" wide forward and 56" wide rearward lower enhanced compartmentation and (3) opening upper compartments. For use with ladder storage in the hosebed	$11,574
3100-0315	Driver side body with 19.5" wide forward and 31" wide rearward compartmentation. Includes (1) 40" wide compartment over the wheel well. Compartment tops raised approximately 6" to match hosebed height.	$10,160
3100-0316	Stainless steel driver side body with rescue style full height 30" front, 40" rear and 60" wide fender panel L2 compartment. For use with suicide hinged L1 door (if applicable).	$26,783
3100-0318	Driver side body with full height 48" wide forward and 56" wide rearward enhanced extended compartmentation. Includes (1) 56" wide compartment over the wheel well.	$13,108
3100-0319	Driver side roof top compartment contents: (1) 10' hard suction hose (not included) stored horizontal. Includes stop bracket rearward of hard suction hoses and Nylatron compartment flooring.	$532
3100-0320	(2) driver side roof top compartments with extra width to inboard side. Includes hinged raised compartment lids with turn latches, grab handle(s) and gas shock hold open and drain line(s) ran to below body. Each lid to have (1) bracket mounted LED light and to be wired to door ajar indicator in cab. Compartment lid construction shall be aluminum smooth plate IPO diamond plate painted Black Scorpion (rough finish).	$5,709
3100-0321	Driver side body with upper and lower compartmentation. Includes 42" wide forward and 42" wide rearward lower compartments, (3) opening upper compartments with portable water tank storage with access door at rear. Smooth plate compartment top painted black durabak.	$11,936
3100-0322	Driver 3/4 side body with (3) full height, rescue style, (2) forward compartments (48" and 30" wide) and (1) rearward compartment (24"). Includes (1) 56" wide compartment over the wheel well.	$8,034
3100-0323	Driver 3/4 side tandem stainless steel body with 35" front and 35" rear for flat back body design. Includes (2) 42" wide compartments over rear tandem wheels, with side dump valve between.	$11,973
3100-0324	Driver side roof top compartment. Includes vertically hinged access door at the rear with push button latch to be wired to door ajar indicator in cab.	$1,545
3100-0325	(2) driver side roof top compartments with extra width to inboard side. Includes hinged raised compartment lids with turn latches, grab handle(s) and gas shock hold open and drain line(s) ran to below body. Each lid to have (2) bracket mounted LED lights and to be wired to door ajar indicator in cab.	$5,400
3100-0326	Driver side tandem body with upper and lower compartmentation. Includes 30" wide forward and 30" wide rearward compartments and (4) opening upper compartments.	$13,179
3100-0327	Driver side body with full height 50" wide forward and 42" wide rearward compartmentation. Includes (1) 56" wide compartment over the wheel well. Rear perimeter or body raised 3" for improved departure angle.	$11,836
3100-0329	Stainless steel driver side body with full height 48" wide forward and 48" wide rearward compartmentation. Includes (1) 54" wide compartment over the wheel well.	$27,988
3100-0330	Driver 1/2 side tandem stainless steel tanker body with 60" front and 60" rear for flat back body design. Includes (2) 55" wide tandem wheel fender panels.	$13,622
3100-0331	Driver side body with full height 24" wide forward and 36" wide rearward compartmentation. Includes (1) 56" wide compartment over the wheel well. Rear bottom corner of truck will be angled 30 degrees for a greater rear angle of departure.	$9,937
3100-0332	Driver side body with full height 36" wide forward and 62" wide rearward enhanced extended compartmentation. Includes (1) 56" wide compartment over the wheel well.	$12,419
3100-0333	Driver full height side body with 36" wide forward and 48" wide rearward compartmentation. Includes (2) 38" wide compartments over the wheel well and one forward area for side tank dump. For use with custom chassis only.	$9,929

3100-0334	Driver side tandem body with full height 30" wide forward and 30" wide rearward compartmentation. Includes (2) 51.5" wide compartments over the wheel well.	$13,016
3100-0335	Driver side body with full height 48" wide forward and 48" wide rearward compartmentation. Includes (1) 56" wide compartment over the wheel well. Compartment material to be 5083-H321.	$12,979
3100-0337	Driver side body with full height 48" wide forward and 54" wide rearward compartmentation. Includes (1) 56" wide compartment over the wheel well.	$12,449
3100-0339	Driver 3/4 side body with upper and lower compartmentation. Includes 42" wide forward and 42" wide rearward lower compartments and (2) opening upper compartments.	$7,114
3100-0340	Driver side ERV body with full height 37" forward and 52" rearward. Includes (1) 56" wide compartment over the wheel well. Includes (2) roof top compartments with hinged raised lids with thumb latches, grab handle(s), and gas shock hold open and drain line(s) ran to below body.Eack lid to have (1) bracket mounted LED light and to be wired to door ajar indicator in cab.	$18,998
3100-0341	Driver side body with full height 24" wide forward and 36" wide rearward compartmentation. Includes (1) 56" wide compartment over the wheel well.	$9,937
3100-0342	Driver side body with full height 38" wide forward and 56" wide rearward compartment. Includes (1) 56" wide compartment over the wheel well.	$12,307
3100-0343	(2) Driver side roof top compartments. Includes hinged raised compartment lids with thumb latches and grab handle(s). Each lid to have (1) bracket mounted LED light and to be wired to door ajar indicator in cab.	$2,655
3100-0344	Driver half side tandem body with (2)41" wide forward and (2)32" wide rearward compartmentation.	$11,819
3100-0347	Stainless steel driver side body with full height/full depth 40" wide forward and 48" wide rearward compartmentation. Includes (1) 60" wide compartment over the wheel well.	$26,494
3100-0349	Driver side roof top compartment contents: (1) 12'-14'+ hard suction hose (not included) stored horizontal. Includes Nylatron compartment flooring. Length of capacity depends on body configuration.	$619
3100-0350	Notch compartment L1 in forward ceiling area to allow for hose bed preconnect piping to route down into pump module.	$406
3100-0351	Driver side body with full height 48" wide forward and 62" wide rearward compartmentation. Includes (1) 56" wide compartment over the wheel well.	$12,320
3100-0352	Stainless steel driver side body with full height 48" wide forward and 58" wide rearward enhanced extended compartmentation. Includes (1) 60" wide compartment over the wheel well.	$28,410
3100-0354	Driver side body with full height 54" wide forward and 48" wide rearward compartmentation. Includes (1) 56" wide compartment over the wheel well. Top Mount eMAX Only.	$12,267
3100-0356	(2) driver side roof top compartments with extra width to inboard side. Includes hinged raised compartment lids with turn latches, grab handle(s) and gas shock hold open and drain line(s) ran to below body. Each lid to have (1) bracket mounted LED light and to be wired to door ajar indicator in cab.	$5,306
3100-0358	Driver side body with full height 42" wide forward and 56" wide rearward compartmentation. Includes (1) 56" wide compartment over the wheel well.	$12,865
3100-0359	Stainless steel driver side tanker body high side 52" front and 52" rear rescue style, with Lord/coil spring torsion style body mounts. Four compartments, tandem axle.	$20,566
3100-0360	Stainless steel driver side special tall body with full height 40" wide forward and 58" wide rearward enhanced extended compartmentation. Includes (1) 54" wide compartment over the wheel well.	$27,385
3100-0361	Stainless steel driver side body with full height/full depth 48" wide forward and 48" wide rearward compartmentation. Includes (1) 54" wide compartment over the wheel well.	$27,988
3100-0362	Driver side body with full height 50" wide forward and 36" wide rearward compartmentation. Includes (1) 56" wide compartment over the wheel well. Rear perimeter or body raised 4" for improved departure angle.	$11,421
3100-0364	Stainless steel driver side body with full height 40" wide forward and 58" wide rearward enhanced extended compartmentation. Includes (1) 60" wide compartment over the wheel well.	$27,172
3100-0365	Driver 3/4 side body with full height 24" wide forward and 36" wide rearward compartmentation. Includes (1) 56" wide compartment over the wheel well.	$5,453
3100-0366	(2) driver side roof top compartments. Includes hinged raised compartment lids with slam style D-ring latches and no grab handles. Each lid to have (1) bracket mounted LED light and to be wired to door ajar indicator in cab.	$2,782
3100-0367	Driver side body with upper and lower compartmentation. Includes 42" wide forward and 42" wide rearward lower compartments and (2) opening upper compartments.	$11,120
3100-0368	Driver side body with full height 26" and 30" wide forward compartments and 56" wide rearward compartmentation. Includes (1) 56" wide compartment over the wheel well. Side Mount eMAX only.	$14,451
3100-0369	Driver side body with full height 60" wide forward and 42" wide rearward compartmentation. Includes (1) 33" wide compartment over the wheel well and (1) Zico Overhead Portable Tank Rack. Rack to hold (1) 2100 gallon portable tank.	$18,240
3100-0370	Driver side body with full height 42" wide forward and 42" wide rearward compartmentation. Includes (1) 56" wide compartment over the wheel well.	$11,218
3100-0372	Driver side smooth plate roof top compartment and paited black Durabak. Includes smooth plate vertically hinged access door at the rear with push button latch and painted job color to be wired to door ajar indicator in cab.	$1,932
3100-0373	(2) driver side roof top compartments with extra width to inboard side. Includes hinged raised compartment lids with turn latches, grab handle(s) and gas shock hold open and drain line(s) ran to below body. Each lid to have (1) Amdor LED strip light and to be wired to door ajar indicator in cab.	$6,061
3100-0374	Driver side roof top compartment contents: (2) 6" x 10' hard suction hoses (not included) stored horizontal side by side. Includes stop bracket rearward of hard suction hoses and partition over the hard suction hoses.	$1,056

3100-0375	(2) driver side roof top compartments. Includes hinged raised compartment lids with turn latches and grab handle(s). Each lid to have (1) bracket mounted LED light and to be wired to door ajar indicator in cab. Includes fixed floor with hard suction storage below accessible through hinged rear panel access door with bent D-ring latch.	$3,494
3100-0377	Driver side body with full height 42" and 40" wide forward compartments and 56" wide rearward compartmentation. Includes (1) 56" wide compartment over the wheel well. Side Mount eMAX only.	$14,971
3100-0379	Driver Full height forward compartment and 3/4 side rear of L1 tandem body with 42" wide forward and 42" wide rearward compartmentation. Includes (2) 51.5" wide compartments over the wheel well. Lowered W/Well for extra compt heigth. Side Dump Valves between Tandems N/A.	$13,978
3100-0380	(2) driver side roof top compartments. Includes hinged raised compartment lids with turn latches and grab handle(s). Each lid to have (3) bracket mounted EON LED lights and to be wired to door ajar indicator in cab.	$2,655
3100-0381	Driver side tandem body with upper and lower compartmentation. Includes (2) 28" wide forward and 54" wide rearward compartments and (1) opening forward upper compartment with painted panels rearward.	$16,921
3100-0384	Driver side tandem body with upper and lower compartmentation. Includes 60" wide full height forward and 54" wide half height rearward compartments and (1) opening forward upper compartment with painted panels rearward.	$16,925
3100-0385	(2) Driver side roof top compartments with extra width to inboard side. Includes hinged raised compartment lids with turn latches, grab handle(s) and gas shock hold open and drain line(s) ran to below body. Each lid to have (1) bracket mounted LED light and to be wired to door ajar indicator in cab. Forward compartment to have standard floor. Rearward compartment shall be stepped at inboard side for a 26" deep section approximately 8.5" wide in order to stow a stokes basket on edge. Forward and rearward compartments to have a dividing wall between them to secure the different floor configurations. Stokes basket to be stored shall be a Ferno 71-M basket or similar in size.	$6,220
3100-0386	Driver side rear mount pumper body with full height 48" wide forward and 60" wide rearward compartmentation. Includes (1) 56" wide compartment over the wheel well and one (1) storage tunnel and access door at rear.	$17,028
3100-0387	Driver side body with full height 60" wide forward and 48" wide rearward compartmentation. Includes (1) 56" wide compartment over the wheel well. Side Mount eMAX only.	$13,087
3100-0388	(2) driver side roof top compartments for instillation of DOT/ASME bottles. Includes hinged raised compartment lids with turn latches and grab handle(s). Each lid to have (1) bracket mounted LED light and to be wired to door ajar indicator in cab.	$2,655
3100-0389	Driver side body with full height 34" and 48" wide forward compartments and 56" wide rearward compartmentation. Includes (1) 56" wide compartment over the wheel well. Side Mount eMAX only.	$14,971
3100-0390	Driver side body with full height 30" wide forward and 44" wide rearward compartmentation. Includes (1) 56" wide compartment over the wheel well.	$10,873
3100-0391	Stainless steel driver side body with full height/full depth 60" wide forward and 60" wide rearward compartmentation. Includes (1) 60" wide compartment over the wheel well.	$30,275
3100-0393	Stainless steel driver side body with full height 48" wide forward and 40" wide rearward compartmentation. Includes (1) 60" wide compartment over the wheel well.	$27,629
3100-0394	Driver side rear mount rescue pumper body with full height 38" wide forward and 42" wide rearward compartmentation. Includes (1) 56" wide compartment over the wheel well and 30 degree angled rear body for improved angle of departure.	$12,307
3100-0395	Driver full height body side with (1) 48" wide, Full Height forward compartment, (1) 30" wide, lower forward compartment adjacent to w/well, (2) upper compartments (57" wide each), the rearward upper having a rear compartment face access door for portable tank storage, and (1) lower rearward compartment (24") to rear of the w/well.	$11,323
3100-0396	Stainless steel driver side body with full height 54" wide forward and 48" wide rearward compartmentation. Includes (1) 60" wide compartment over the wheel well.	$30,228
3100-0398	(2) side low profile stepped interior roof top compartments with extra width to inboard side. Includes hinged raised compartment lids with turn latches,gas shock hold opens and drain line(s) ran to below body. Each lid to have (1) bracket mounted LED light and to be wired to door ajar indicator in cab. Lids shall be without grab handles for lowered OAH and shall have a stepped interior.	$5,415
3100-0399	Driver half side body with 42" wide forward and 56" wide rearward extended compartmentation. For use with a drop down ladder rack.	$5,956
3100-0400	Driver side body with upper and lower compartmentation. Includes 42" wide forward and 36" wide rearward lower compartments and (3) opening upper compartments.	$11,014
3100-0401	Driver side rear mount rescue pumper body with full height 60" wide forward and 44" wide rearward compartmentation. Includes (1) 56" wide compartment over the wheel well and 30 degree angled rear body for improved angle of departure.	$14,307
3100-0402	Driver side diamond plate roof top compartment. Includes smooth plate painted vertical hinged access door at the rear with D-Ring latch to be wired to door ajar indicator in cab.	$1,570
3100-0403	(1) driver side roof top compartment. Includes dual hard suction storage (over/under) accessible through hinged rear panel access door with trigger style latch. Includes (1) bracket mounted LED light and to be wired to door ajar indicator in cab. Includes fixed forward stop for 10' hard suction hoses .Lower hose stop to be positioned for use with a barrel type suction strainer attached.	$3,232
3100-0404	Stainless steel driver side body with full height 40" wide forward and 40" wide rearward compartmentation. Includes (1) 60" wide compartment over the wheel well.	$26,901
3100-0405	Driver side body with full height 30" wide forward and 60" wide rearward extended compartmentation. Includes (1) 56" wide compartment over the wheel well.	$11,159
3100-0406	Stainless steel driver side body with full height 30" front, 40" rear and 60" wide fender panel L2 compartment.	$25,600

3100-0407	Driver side body with full height 36" wide forward and 56" wide rearward compartmentation. Includes (1) 56" wide compartment over the wheel well. For use on low hosebed body and individual compartments on the driver side.	$13,607
3100-0408	L1 floor to have a cut-out rearward and near back wall for a recessed box as applicable to allow for 6000 psi DOT bottle to be located without interference.	$512
3100-0409	(2) driver side roof top compartments. Includes hinged raised compartment lids with turn latches and grab handle(s). Each lid to have (1) bracket mounted ROM V4 LED strip light and to be wired to door ajar indicator in cab.	$3,016
3100-0410	Driver side body with full height 34" and 30" wide forward compartments and 56" wide rearward compartmentation. Includes (1) 56" wide compartment over the wheel well. Side Mount eMAX	$15,007
3100-0411	Driver full height side body with (3) full height, rescue style, forward compartments (48" and 30" wide) and (1) rearward compartment (24" wide), (1) upper compartment (56" wide).	$9,447
3100-0412	Driver side body with full height 42 in. wide forward and 56 in. wide rearward enhanced extended compartmentation. Includes (1) 56 in. wide compartment over the wheel well. L1 compartment to be Rescue Pumper style full depth compartment.	$13,365
3100-0413	(2) driver side roof top compartments with extra width to inboard side. Compartment top and lids to be smooth plate painted black Durabak. Includes hinged raised compartment lids with turn latches, grab handle(s) and gas shock hold open and drain line(s) ran to below body. Each lid to have (1) bracket mounted LED light and to be wired to door ajar indicator in cab.	$6,632
3100-0414	Stainless steel driver side body with full height 48" wide forward and 48" wide rearward compartmentation. Includes (1) 60" wide compartment over the wheel well.	$32,458
3100-0415	(2) driver side roof top compartments. Includes hinged raised compartment lids with turn latches and grab handle(s). Each lid to have (1) bracket mounted ROM V4 LED strip light and to be wired to door ajar indicator in cab.	$3,016
3100-0416	Driver side body with full height 42in. wide forward and 62in. wide rearward enhanced extended compartmentation. Includes (1) 56in. wide compartment over the wheel well and one (1) storage tunnel.	$15,941
3100-0417	Driver side roof top compartment contents: (2) 6" x 10' hard suction hoses (not included) stored vertical.	$335
3100-0418	Driver half side tandem body with 60" wide forward and 48" wide rearward compartmentation.	$8,750
3100-0419	Driver side body with full height 60" wide forward and 56" wide rearward compartmentation. Includes (1) 56" wide compartment over the wheel well. Rear perimeter or body raised 3" for improved departure angle. Side Mount eMAX only.	$13,087
3100-0420	Drivers full height side body with 20" wide and 42" wide forward compartments and 42" wide rearward compartment. Includes (1) 56" wide compartments over the wheel well. For use with 30 high lower compt height only.	$9,929
3100-0421	Driver side body with full height 44" wide forward and 36" wide rearward compartmentation and 60.75" opening. Includes (1) 56" wide compartment over the wheel well and 28.75" opening .	$12,273
3105-0001	Enhanced extended forward compartmentation for Rescue Pumper. Includes 14" of additional interior width to the forward side compartments and 25" of additional depth in the forward 14" wide section (as applicable). Overall interior height will vary depending on additional option selections.	$2,216
3105-0002	Rear Mount forward body. Includes main side body structures and compartment L1/R1, L2/R2.	$15,086
3105-0006	Rear Mount forward body compartments. Includes L1/R1 54" wide x 26" deep in the 56" lower area and 12" deep in the 12" upper area, L2/R2 56" wide x 26" deep in the 22" lower area and 12" deep in the 12" upper area.	$1,494
3105-0008	Rear Mount forward body. Includes main side body structures and compartment L1/R1, L2/R2 and a Zico overhead ladder rack (control located officer rear body/pump module).	$24,021
3105-0009	Rear Mount forward body compartments with driver side storage tunnel. Includes L1 - 72" wide x 26" deep in the 30" lower area and 12" deep in the 34" upper area, L2 - 56" wide x 12" deep, R1 - 72" wide x 26" deep in the 56" lower area and 12" deep in the 12" upper area, R2 - 56" wide x 26" deep in the 22" lower area and 12" deep in the 12" upper area.	$4,403
3105-0010	Rear Mount forward body. Includes main side body structures and compartment LT/RT, L1/R1, L2/R2. LT/RT (full width and 95" high) with lower storage areas (compartment opening 67" wide and same height as main body compartments). Includes full width forward storage pan and a pan in the rearward center/officer area between the driver roof top compartment. Transverse floor to run full width. Rear headboard to have area for routing of plumbing for preconnects located in rearward area. Area above preconnects (forward area) to be for storage of a stokes basket. L1/R1 54" wide x 26" deep in the 56" lower area and 12" deep in the 12" upper area, L2/R2 56" wide x 26" deep in the 22" lower area and 12" deep in the 12" upper area.	$30,731
3105-0011	Rear Mount forward body compartments with driver side storage tunnel. Includes L1 - 54" wide x 26" deep in the 30" lower area and 12" deep in the 38" upper area, L2 - 56" wide x 12" deep. R1 - 54" wide x 26" deep in the 56" lower area and 12" deep in the 12" upper area, R2 - 56" wide x 26" deep in the 22" lower area and 12" deep in the 12" upper area.	$1,494
3105-0014	Rear Mount forward body compartments. Includes L1/R1 - 60" wide x 26" deep in the 56" lower area and 12" deep in the 12" upper area, L2/R2 - 56" wide x 26" deep in the 22" lower area and 12" deep in the 12" upper area.	$2,465
3105-0015	Rear Mount forward body compartments. Includes L1/R1 - 66" wide x 26" deep in the 56" lower area and 12" deep in the 12" upper area, L2/R2 - 56" wide x 26" deep in the 22" lower area and 12" deep in the 12" upper area.	$3,435
3105-0016	Rear Mount forward body compartments. Includes L1/R1 - 72" wide x 26" deep in the 56" lower area and 12" deep in the 12" upper area, L2/R2 - 56" wide x 26" deep in the 22" lower area and 12" deep in the 12" upper area.	$4,403
3105-0017	Rear Mount forward body compartments with officer side Zico Overhead Ladder Rack. Includes L1/R1 - 54" wide x 26" deep in the 56" lower area and 12" deep in the 12" upper area, L2 - 56" wide x 26" deep in the 22" lower area and 12" deep in the 12" upper area, R2 - 33" wide x 26" deep in the 22" lower area and 12" deep in the 12" upper area (position of R2 depends on position of overhead ladder rack).	$1,494

3105-0018	Rear Mount forward body compartments with officer side Zico Overhead Ladder Rack. Includes L1/R1 - 60" wide x 26" deep in the 56" lower area and 12" deep in the 12" upper area, L2 - 56" wide x 26" deep in the 22" lower area and 12" deep in the 12" upper area, R2 - 33" wide x 26" deep in the 22" lower area and 12" deep in the 12" upper area (position of R2 depends on position of overhead ladder rack).	$2,465
3105-0019	Rear Mount forward body compartments with officer side Zico Overhead Ladder Rack. Includes L1/R1 - 66" wide x 26" deep in the 56" lower area and 12" deep in the 12" upper area, L2 - 56" wide x 26" deep in the 22" lower area and 12" deep in the 12" upper area, R2 - 33" wide x 26" deep in the 22" lower area and 12" deep in the 12" upper area (position of R2 depends on position of overhead ladder rack).	$3,435
3105-0020	Rear Mount forward body compartments with officer side Zico Overhead Ladder Rack. Includes L1/R1 - 72" wide x 26" deep in the 56" lower area and 12" deep in the 12" upper area, L2 - 56" wide x 26" deep in the 22" lower area and 12" deep in the 12" upper area, R2 - 33" wide x 26" deep in the 22" lower area and 12" deep in the 12" upper area (position of R2 depends on position of overhead ladder rack).	$4,403
3105-0022	Rear Mount forward body compartments with driver side storage tunnel. Includes L1 - 60" wide x 26" deep in the 30" lower area and 12" deep in the 38" upper area, L2 - 56" wide x 12" deep. R1 - 60" wide x 26" deep in the 56" lower area and 12" deep in the 12" upper area, R2 - 56" wide x 26" deep in the 22" lower area and 12" deep in the 12" upper area.	$2,465
3105-0023	Rear Mount forward body compartments with driver side storage tunnel. Includes L1 - 66" wide x 26" deep in the 30" lower area and 12" deep in the 38" upper area, L2 - 56" wide x 12" deep. R1 - 66" wide x 26" deep in the 56" lower area and 12" deep in the 12" upper area, R2 - 56" wide x 26" deep in the 22" lower area and 12" deep in the 12" upper area.	$3,435
3105-0025	Rear Mount forward body compartments with officer side storage tunnel. Includes L1 - 54" wide x 26" deep in the 56" lower area and 12" deep in the 12" upper area, L2 - 56" wide x 26" deep in the 22" lower area and 12" deep in the 12" upper area. R1 - 54" wide x 26" deep in the 30" lower area and 12" deep in the 38" upper area, R2 - 56" wide x 12" deep.	$1,494
3105-0026	Rear Mount forward body compartments with officer side storage tunnel. Includes L1 - 60" wide x 26" deep in the 56" lower area and 12" deep in the 12" upper area, L2 - 56" wide x 26" deep in the 22" lower area and 12" deep in the 12" upper area. R1 - 60" wide x 26" deep in the 30" lower area and 12" deep in the 38" upper area, R2 - 56" wide x 12" deep.	$2,465
3105-0027	Rear Mount forward body compartments with officer side storage tunnel. Includes L1 - 66" wide x 26" deep in the 56" lower area and 12" deep in the 12" upper area, L2 - 56" wide x 26" deep in the 22" lower area and 12" deep in the 12" upper area. R1 - 66" wide x 26" deep in the 30" lower area and 12" deep in the 38" upper area, R2 - 56" wide x 12" deep.	$3,435
3105-0028	Rear Mount forward body compartments with officer side storage tunnel. Includes L1 - 72" wide x 26" deep in the 56" lower area and 12" deep in the 12" upper area, L2 - 56" wide x 26" deep in the 22" lower area and 12" deep in the 12" upper area. R1 - 72" wide x 26" deep in the 30" lower area and 12" deep in the 38" upper area, R2 - 56" wide x 12" deep.	$4,403
3105-0030	Rear Mount forward body compartments w/dual storage tunnels. Includes L1/R1 - 54" wide x 26" deep in the 30" lower area and 12" deep in the 38" upper area, L2/R2 - 56" wide x 12" deep.	$1,494
3105-0031	Rear Mount forward body compartments w/dual storage tunnels. Includes L1/R1 - 60" wide x 26" deep in the 30" lower area and 12" deep in the 38" upper area, L2/R2 - 56" wide x 12" deep.	$2,465
3105-0032	Rear Mount forward body compartments w/dual storage tunnels. Includes L1/R1 - 66" wide x 26" deep in the 30" lower area and 12" deep in the 38" upper area, L2/R2 - 56" wide x 12" deep.	$3,435
3105-0033	Rear Mount forward body compartments w/dual storage tunnels. Includes L1/R1 - 72" wide x 26" deep in the 30" lower area and 12" deep in the 38" upper area, L2/R2 - 56" wide x 12" deep.	$4,403
3105-0034	Rear Mount forward body. Includes main side body structures and compartment L1/R1, L2/R2 and (1) storage tunnel.	$20,894
3105-0035	Rear Mount forward body. Includes main side body structures and compartment L1/R1, L2/R2 and (2) storage tunnels.	$25,302
3105-0037	Transverse module (full width and height of the body) located forward of the body. Includes single 30" wide compartment opening per side (with a shallow lower area and a transverse upper area with full width smooth plate flooring). Upper area of transverse module to have diamond plate dunnage pan.	$11,228
3105-0038	Transverse module (full width and height of the body) located forward of the body. Includes single 36" wide compartment opening per side (with a shallow lower area and a transverse upper area with full width smooth plate flooring). Upper area of transverse module to have diamond plate dunnage pan.	$12,721
3105-0039	Transverse module (full width and height of the body) located forward of the body. Includes single 42" wide compartment opening per side (with a shallow lower area and a transverse upper area with full width smooth plate flooring). Upper area of transverse module to have diamond plate dunnage pan.	$14,214
3105-0040	Transverse module (full width and height of the body) located forward of the body. Includes single 50" wide compartment opening per side (with a shallow lower area and a transverse upper area with smooth plate flooring). Rearward transverse compartment area to have double preconnects with removable trays (side by side) and backboard storage (rearward of preconnects with velcro straps). Upper area of transverse module to have diamond plate dunnage pan.	$12,541
3105-0041	Transverse module (full width and height of the body) located forward of the body. Includes single 56" wide compartment opening per side (with a shallow lower area and a transverse upper area with smooth plate flooring). Rearward transverse compartment area to have double preconnects with removable trays (side by side) and backboard storage (rearward of preconnects with velcro straps). Upper area of transverse module to have diamond plate dunnage pan.	$14,034
3105-0042	Transverse module (full width and height of the body) located forward of the body. Includes single 62" wide compartment opening per side (with a shallow lower area and a transverse upper area with smooth plate flooring). Rearward transverse compartment area to have double preconnects with removable trays (side by side) and backboard storage (rearward of preconnects with velcro straps). Upper area of transverse module to have diamond plate dunnage pan.	$15,528

3105-0043	Transverse module (full width and height of the body) located forward of the body. Includes single 50" wide compartment opening per side (with a shallow lower area and a transverse upper area with smooth plate flooring). Rearward transverse compartment area to have triple preconnects with removable trays (side by side). Upper area of transverse module to have diamond plate dunnage pan.	$12,979
3105-0044	Transverse module (full width and height of the body) located forward of the body. Includes single 56" wide compartment opening per side (with a shallow lower area and a transverse upper area with smooth plate flooring). Rearward transverse compartment area to have triple preconnects with removable trays (side by side). Upper area of transverse module to have diamond plate dunnage pan.	$14,472
3105-0045	Transverse module (full width and height of the body) located forward of the body. Includes single 62" wide compartment opening per side (with a shallow lower area and a transverse upper area with smooth plate flooring). Rearward transverse compartment area to have triple preconnects with removable trays (side by side). Upper area of transverse module to have diamond plate dunnage pan.	$15,966
3105-0046	Transverse module (full width and height of the body) located forward of the body. Includes single 50" wide compartment opening per side (with a shallow lower area and a transverse upper area with smooth plate flooring). Rearward transverse compartment area to have double preconnects with removable trays (stacked). Upper area of transverse module to have diamond plate dunnage pan.	$12,837
3105-0047	Transverse module (full width and height of the body) located forward of the body. Includes single 56" wide compartment opening per side (with a shallow lower area and a transverse upper area with smooth plate flooring). Rearward transverse compartment area to have double preconnects with removable trays (stacked). Upper area of transverse module to have diamond plate dunnage pan.	$14,330
3105-0048	Transverse module (full width and height of the body) located forward of the body. Includes single 62" wide compartment opening per side (with a shallow lower area and a transverse upper area with smooth plate flooring). Rearward transverse compartment area to have double preconnects with removable trays (stacked). Upper area of transverse module to have diamond plate dunnage pan.	$15,823
3105-0049	Preconnect module (stacked) for use with aluminum speedlay trays. Includes area for (2) stacked preconnect, lower storage compartments with push button latches, running boards and upper area dunnage pan.	$11,228
3105-0051	Preconnect module to be capable of holding the following contents: Upper preconnect area to hold (1) 400' of 1.75" DJ with removable tray. Lower preconnect area to hold (1) 400' of 1.75" DJ with removable tray.	$877
3105-0052	Preconnect module to be capable of holding the following contents: Upper preconnect area to hold (2) 200' of 1.75" DJ with removable trays. Lower preconnect area to hold 200' of 2.5" DJ with removable tray.	$1,314
3105-0053	Preconnect module to be capable of holding the following contents: Upper preconnect area to hold (2) 200' of 1.75" DJ with removable trays. Lower preconnect area to hold (2) 200' of 1.75" DJ with removable trays.	$1,753
3105-0054	Rear Mount forward body. Includes main side body structures and compartment L1/R1, L2/R2.	$19,890
3105-0056	Preconnect module (stacked). Includes area for (2) stacked preconnect, lower storage compartments with push button latches, running boards, upper area dunnage pan and horizontal backboard storage with drop down diamond plate access door (wired to door ajar).	$8,306
3105-0058	Transverse module (full width and height of the body) located forward of the body. Includes single 30" wide compartment opening per side (with a shallow lower area and a transverse upper area with smooth plate flooring). Lower transverse compartment area to have triple preconnects with removable trays (side by side). Above the speedlay area to be storage for stokes basket. Upper area of transverse module to have diamond plate dunnage pan.	$11,798
3105-0059	The outboard panels of the full width transverse module to be smooth plate overlays. These areas are to be seamless and painted job color.	$306
3105-0060	Transverse module (full width and height of the body) located forward of the body. Includes single 30" wide compartment opening per side (with a shallow lower area and a transverse upper area with smooth plate flooring). Rearward transverse compartment area to have triple preconnects with removable trays (stacked, (2) 1.5" on top and (1) 2.5" on bottom). Upper area of transverse module to have diamond plate dunnage pan.	$12,979
3105-0061	Backboard storage sleeve with retaining strap. Located in LT/RT compartment forward of the speedlays to be 5" wide x 20" high.	$953
3105-0062	Rear Mount body. Includes main side body structures and compartments L1/R1, L2/R2, L3/R3 and L4/R4. Includes interior compartment offset for pump panel location and mounting, rear body structure for rear mounted pump application.	$36,763
3105-0066	Rear Mount forward body compartments. Includes L1/R1 - 72" wide x 26" deep in the 56" lower area and 12" deep in the 12" upper area, L2/R2 - 56" wide x 26" deep in the 22" lower area and 12" deep in the 12" upper area. An externally-mounted compartment top shall be provided and constructed of a 1/8" (.125") aluminum smooth plate with black Scorpion coating (IPOS diamond plate).	$4,742
3105-0067	Transverse module (full width and height of the body) located forward of the body. Includes single 30" wide compartment opening per side (with a shallow lower area and a transverse upper area with smooth plate flooring). Rearward transverse compartment area to have triple preconnects with removable trays (stacked, (2) 1.5" on top and (1) 2.5" on bottom). Upper area of transverse module to have a dunnage pan made of aluminum smooth plate with black Scorpion coating (IPOS diamond plate). The running boards shall be constructed of aluminum smooth plate with black Scorpion coating (IPOS diamond plate)	$13,569
3105-0068	Preconnect module to be capable of holding the following contents: Upper preconnect area to hold (2) 200' of 1.75" DJ with removable poly trays. Lower preconnect area to hold 200' of 2.5" DJ with removable poly tray.	$1,314

3105-0069	Preconnect module (stacked)for use with Poly trays. Includes area for (2) stacked preconnect, lower storage compartments with push button latches, running boards and upper area dunnage pan.	$11,696
3105-0071	Rear Mount forward body compartments. Includes L1/R1 - 44" wide x 26" deep in the 56" lower area and 12" deep in the 12" upper area, L2/R2 - 44" wide x 26" deep in the 56" lower area and 12" deep in the 12" upper area, L3/R3 - 56" wide x 26" deep in the 22" lower area and 12" deep in the 12" upper area, L4 - (pump panel location upper section) - 46" wide x 24" high x 24" deep in the lower section and R4 - 46" wide x 24" deep in the 56" lower area and 12" deep in the 12" upper area.	$37,460
3110-0000	Center Slam Strip Rear End with (3) compartments- (2) lower and (1) upper and a diamond plate center strip for a Jet or Newton Dump application. Includes diamond plate panels.	$2,321
3110-0001	Center Slam Strip Rear End with (3) compartments- (2) lower and (1) upper and a smooth plate center strip for a Jet or Newton Dump application. Includes smooth plate panels.	$2,321
3110-0002	Upper and Lower Rear Compartment. Includes diamond plate panels.	$1,789
3110-0003	Upper and Lower Rear Compartment. Includes smooth plate panels.	$1,789
3110-0004	Full Height Rear Compartment. Includes diamond plate panels.	$1,257
3110-0005	Full Height Rear Compartment. Includes smooth plate panels.	$1,257
3110-0006	Full Height Rear Compartment with Upper Ladder Storage Compartment. Includes smooth plate panels. Includes area for storage of (1) 24', (1) 14', (1) 10' Attic, (2) pike poles and a drop down storage access door with push button latches (wire to door ajar).	$2,143
3110-0007	Full Height Rear Compartment. Includes diamond plate panels, 30 degree angle of departure with flip down tailboard and handrails- (2) vertically on trailing edge of body and horizontally mounted handrail(s) below hosebed.	$2,744
3110-0008	Full Height Rear Compartment. Includes smooth plate panels, angled rear body with flip down tailboard and handrails- (2) vertical on trailing edge of body and horizontal mounted handrail(s) below hosebed.	$2,744
3110-0010	Full Height Rear Compartment with Upper Ladder Storage Compartment. Includes area for storage of (1) 24', (1) 14', (1) 10' Attic, (2) pike poles and a drop down storage access door with push button latches (wire to door ajar).	$2,143
3110-0011	Full Height Rear Compartment with Upper Storage Compartment and Officer Side Storage Tunnel. Includes smooth plate panels and storage access doors with push button latches.	$2,229
3110-0012	Full Height Rear Compartment with Upper Storage Compartment and Officer Side Ladder Tunnel. Includes diamond plate panels and storage access doors with push button latches.	$2,229
3110-0013	Full Height Rear Compartment with Officer Side Storage Tunnel. Includes smooth plate panels and storage access door with push button latch.	$1,168
3110-0014	Full Height Rear Compartment with Officer Side Ladder Tunnel and Recessed Traffic Advisor. Includes smooth plate panels and storage door with push buton latch..	$1,546
3110-0015	Full Height Rear Compartment with Officer Side Storage Tunnel. Includes diamond plate panels and storage access door with push button latch.	$1,133
3110-0016	Full Height Rear Compartment with Officer Side Ladder Tunnel and Recessed Traffic Advisor. Includes diamond plate panels and storage door with push button latch.	$1,546
3110-0017	Full Height Rear Compartment with diamond plate panels.	$1,048
3110-0018	Full Height Rear Compartment with smooth plate panels.	$1,048
3110-0019	Full Height Rear Compartment with recessed traffic advisor and smooth plate panels.	$1,462
3110-0020	Full Height Rear Compartment with recessed traffic advisor and diamond plate panels.	$1,462
3110-0021	Rear mount rear end with upper storage area and lower pump panel. Includes 12" bolt-on tailboard, smooth plate panels and upper access area door with push button latches.	$1,737
3110-0023	Rear mount rear end with upper storage area, lower pump panel area and officer side ladder/equipment tunnel. Includes 12" bolt-on tailboard, smooth plate panels, upper access area and ladder/equipment storage doors with push button latches.	$1,819
3110-0024	Stainless Steel rear end with lower center compartment. Includes 12" bolt-on diamond plate tailboard and handrails- (2) vertically on trailing edge of body and horizontally mounted handrail(s) below hosebed.	$2,480
3110-0025	Stainless steel rear end with lower center compartment.	$2,652
3110-0027	Rear of body to have un-painted extrusions with un-painted smooth plate body panels or just unpainted smooth plate to facilitate rear body striping.	$259
3110-0028	Rear body panels to be painted smooth plate.	$908
3110-0033	Single low rear compartment. For use with low hosebed. Includes diamond plate panels.	$943
3110-0035	Upper rear compartment depth to be approximately 25" deep.	$282
3110-0036	Upper and Lower Rear Compartment with Officer Side Ladder Tunnel. Includes diamond plate panels and storage access door with push button latches.	$2,786
3110-0038	Bolt-on diamond plate tailboard (full width of rear compartment). Includes the enhanced extended side compartment frame work with diamond plate compartment tops, (3) folding steps- (2) low and (1) high officer side with a 12" handrail (as applicable) and handrails- (2) vertically on trailing edge of body and horizontally mounted handrail(s) below hosebed.	$876
3110-0039	Bolt-on diamond plate tailboard (full width of body). Includes (2) handrails- (1) vertical on officer body and (1) horz below hosebed, aluminum ladder (angled) on offier side from tailboard to top edge of body and (3) Cast Products steps (staggered) on driver side.	$3,052
3110-0040	Compartment B1 to be 30" deep IPOS 26" deep.	$888
3110-0041	Stainless steel rear end assembly. Includes lower rear compartment, tailboard with slanted beavertails and bolt-on outboard compartments, (4) Cast Products steps- (2) each side, (1) intermediate step above B1 and handrails- (2) vertically on trailing edge of body and horizontally mounted handrail(s) below hosebed.	$7,175
3110-0042	Single low rear compartment. For use with low hosebed. Includes smooth plate panels.	$1,001
3110-0044	Bolt-on diamond plate 10" tailboard (full width of body). Includes handrails- (2) mounted vertical on trailing edge of body and horizontal mounted handrail(s) below hosebed.	$1,055

3110-0046	Enhanced extended rear compartmentation for Rescue Pumper. Includes 14" of additional interior width to the rear side compartments and 25" of additional depth in the rearward 14" wide section. Overall interior height will vary depending on additional option selections.	$1,961
3110-0047	Full Height Rear Compartment with Full Width Upper Ladder Storage Compartment with smooth plate panels. Includes area for storage of (1) 24', (1) 14', (1) 10' Attic, (2) pike poles, (1) stokes basket, drop down storage access door with push button latches (wire to door ajar) and retaining straps for tunnel contents. Includes channels each side of ladder tunnel for discharges to terminate.	$3,213
3110-0048	Enhanced extended rear compartmentation for Rescue Pumper. Includes 14" of additional interior width to the rear side compartments and 25" of additional depth in the rearward 14" wide section. Overall interior height will vary depending on additional option selections. Includes bolt-on diamond plate tailboard (full width of rear compartment) and handrails- (2) vertically on trailing edge of body and horizontally mounted handrail(s) below hosebed.	$2,710
3110-0049	Bolt-on diamond plate tailboard (full width of rear compartment). Additional 10" of tailboard to run full width of body ("T" shaped tailboard). Includes the enhanced extended side compartment frame work with diamond plate compartment tops, (1) officer side lower area folding step. Driver side includes (1) upper hosebed mounted handrail (as applicable) and handrails- (2) vertical on trailing edge of body and horizontal mounted handrail(s) below hosebed.	$2,361
3110-0050	Upper Storage Compartment to hold (1) stokes basket in place of standard ladder components. Stokes basket to be located on officer side of storage tunnel. Stop bracket included.	$171
3110-0051	B1 compartment to have no door. Includes removal of compartment lights and door ajar.	$378
3110-0052	Bolt-on diamond plate tailboard (full width of rear compartment). Includes the enhanced extended side compartment frame work and handrails- (2) vertical on trailing edge of body and horizontal mounted handrail(s) below hosebed.	$1,124
3110-0053	Bolt-on diamond plate tailboard (full width of rear compartment). Additional 10" of tailboard to run full width of body ("T" shaped tailboard). Includes the enhanced extended side compartment frame work and handrails- (2) vertical on trailing edge of body and horizontal mounted handrail(s) below hosebed.	$2,361
3110-0057	Lower Rear Compartment only. Upper section to be diamond plate panel. Includes diamond plate panels.	$1,087
3110-0060	Full Height Rear Compartment with Upper Ladder Storage Compartment. Includes diamond plate panels. Includes area for misc. storage and a drop down storage access door with push button latches (wire to door ajar).	$2,143
3110-0063	Full Height Rear Compartment with Upper Storage Compartment. Includes smooth plate panels. Includes area for misc. storage and a drop down storage access door with push button latches (wire to door ajar).	$2,143
3110-0065	Full Height Rear Compartment with Officer Side Ladder Tunnel. Includes officer side rear tunnel access door with latch (material to match rearend platework).	$1,168
3110-0066	Full Height Rear Compartment.	$1,048
3110-0067	Lower Rear Compartment only. Upper section to be diamond plate panel. Includes diamond plate panels. Additional diamond plate area just above compartment for mounting of recessed directional lightbar.	$6,035
3110-0068	Center Slam Strip Rear End with (3) compartments - (2) lower and (1) upper and a smooth plate center strip for a Jet or Newton Dump application. Includes smooth plate panels. Includes area above upper compartment for directional lightbar.	$4,794
3110-0069	Full Height Rear Compartment with Upper Storage Compartment and Officer Side Ladder Tunnel. Includes diamond plate panels and storage access doors with Tri-Mark model 030-1300 door latches. The upper tunnel to have on the officer side a stop at 128" and on the driver side a stop at 72" from rear of truck.	$2,712
3110-0070	Upper and Lower Rear Compartment. Includes smooth plate panels. B1 to be 36" wide due to enhanced extended feature and vertically hinged door(s).	$2,510
3110-0071	Spacer panel(s) for recess/warning lighting. Located:[#LOC]. Panel(s) tol be painted job color and to iinclude mounting area for any and all lighting mounted in area.	$294
3110-0073	Upper rear compartment depth to be approximately 29" deep.	$523
3110-0074	Full Height Rear Compartment with Officer Side Ladder Tunnel. Includes smooth plate panels and storage access door with push button latch. Includes a 18" channel for (2) tank inlets and (1) 5" jet dump located 16" up from bottom of compartment opening. Includes area above the channel for mounting of a booster reel. The lower opening to have double door and the upper opening to have a dutch door.	$4,770
3110-0075	Full Height Rear Compartment with Officer Side Ladder Tunnel. Includes diamond plate panels and storage access door with push button latch(es). Includes stepped upper horizontal tube to reduce hosebed height from ground over tank and driver side hosebed area.	$2,933
3110-0076	Full Height Rear Compartment with Officer Side Ladder Tunnel. Includes diamond plate panels and storage access door with D-ring latch.	$1,133
3110-0077	Provide modification to B1 officer side compartment opening. To include vertical extrusion and smooth plate panel with lower access door with push button latches for access to tow eye in compartment. Interior width of B1 to remain standard.	$1,314
3110-0078	Lower Rear Compartment only. Upper section to be smooth plate panel. Includes smooth plate panels.	$1,087
3110-0080	Center Slam Strip Rear End with smooth plate center strip for a Jet or Newton Dump application. Includes smooth plate low side panels and diamond plate upper panel.	$2,042
3110-0081	Full Height Rear Compartment with Officer Side Ladder Tunnel. Includes smooth plate panels and storage access door with D-ring latch.	$1,168
3110-0083	Half length offcir side tunnel. Reduces officer side upper compartment depths of R2 and R3 to 12" deep IPO 26".	$2,129

3110-0085	Upper and Lower Rear Compartment. Includes upper and lower sanded smooth plate panels. Upper rear compartment door to be offset to driver side constructed of smooth plate. Upper rear compartment to be 56" wide for little giant ladder storage. (2) 1.5" x 4" extrusions to be stacked between upper and lower compartments for directional light mounted under intermediate rear step.	$2,325
3110-0086	Bolt-on diamond plate 24" tailboard (full width of hosebed). Includes handrails- (2) vertical mounted on trailing edge of body and (1) horizontal mounted handrail(s) below hosebed.	$1,121
3110-0087	Full Height Rear Compartment with Upper Storage Compartment and Officer Side Ladder Tunnel. Includes smooth plate panels and storage access doors with Tri-Mark door latches.	$2,787
3110-0088	Full Height Rear Compartment with Officer Side Ladder Tunnel. Includes diamond plate panels and storage access door with push button latch. Officer side to have Rescue Pumper and Driver to have Pumper style enhanced extended.	$4,480
3110-0093	Full Height Rear Compartment with Driver Side Storage Tunnel. Includes smooth plate panels and storage access door with push button latch.	$1,168
3110-0094	Full Height Rear Compartment with Upper Storage Compartment and Driver Side Storage Tunnel. Includes smooth plate panels and storage access doors with push button latches.	$2,229
3110-0095	Full Height Rear Compartment with Driver and Officer Side Storage Tunnels. Includes smooth plate panels and storage access doors with push button latches.	$1,289
3110-0096	Full Height Rear Compartment with Upper Storage Compartment, Driver and Officer Side Storage Tunnels. Includes smooth plate panels and storage access doors with push button latches.	$2,494
3110-0099	NFPA hose bed access ladder. Zico model RL12 for increased visibility of rear outboard body mounted DOT/NFPA lighting. Includes required step lights and additional hand rail(s) if applicable. Location: [#LOC].	$1,763
3110-0100	Backboard stop bracket to be located approximately 76" back in officer side of ladder tunnel.	$243
3110-0110	Rear Mount Rear Body. Includes rear body side structures with compartment L3/R3, interior compartment offset for pump panel location and mounting, rear body structure for rear mounted pump application. Includes painted job color smooth plate panels (and storage access door with push button latch, if applicable) outboard of pump access/panel(s) and rear body hosebed.	$9,947
3110-0111	Upper and Lower Rear Compartment. Includes smooth plate lower panels outboard of B1 and diamond plate upper panels outboard of B2. Includes (2) 1.5" x 4" extrusions to be stacked between upper and lower compartments for directional light mounted under intermediate rear step and back-up camera to be mounted centered in front of directional lightbar. The upper compartment to be offset to officer side due to rear discharge options.	$3,742
3110-0113	Bolt-on diamond plate 12" tailboard with Gator Grip (full width of body). Includes hand rails- (2) vertical on trailing edge of body and horizontal mounted hand rail(s) below hose bed.	$1,055
3110-0114	Bolt-on diamond plate 12" tailboard full width of body with Bustin Tread. This provides a flat back body design. Includes hand rails, (2) vertically on trailing edge of body and horizontally mounted hand rail below hose bed.	$1,055
3110-0115	Bolt-on diamond plate 12" tailboard with Gator Grip (full width of body). Includes (2) squared off beavertails with hand rails- (2) vertically on trailing edge of body and horizontally mounted hand rail below hose bed.	$791
3110-0116	Bolt-on diamond plate 12" tailboard full width of body with Bustin Tread. Includes (2) squared off beavertails with hand rails, (2) vertically on trailing edge of beavertails and horizontally mounted hand rail below hose bed.	$791
3110-0117	Bolt-on diamond plate 20" tailboard with Gator Grip. Includes hand rails- (2) vertically on trailing edge of body and horizontally mounted hand rail(s) below hose bed.	$981
3110-0118	Bolt-on diamond plate 20" tailboard between rear side compartments with Bustin Tread. Includes hand rails (2) vertically on trailing edge of body and horizontally mounted hand rail below hose bed.	$981
3110-0119	Bolt-on diamond plate 20" tailboard with Gator Grip (full width of body). Includes (2) squared off beavertails with hand rails- (2) vertically on trailing edge of body and horizontally mounted hand rail(s) below hose bed.	$981
3110-0120	Bolt-on diamond plate 20" tailboard with Bustin Tread (full width of body). Includes (2) squared off beavertails with hand rails, (2) vertically on trailing edge of body and horizontally mounted hand rail below hose bed.	$981
3110-0121	Bolt-on diamond plate 20" tailboard with Gator Grip (full width of body). Includes (2) slanted beavertails with removable outer panels and hand rails- (2) vertically on trailing edge of body and horizontally mounted hand rail(s) below hose bed.	$981
3110-0122	Bolt-on diamond plate 20" tailboard with Bustin Tread (full width of body). Includes (2) slanted beavertails and hand rails, (2) vertically on trailing edge of body and horizontally mounted hand rail below hose bed.	$981
3110-0123	Lower rear stainless steel short compartment B1, 46" wide x 35" high x 26" deep. Includes bolt-on intermediate step above. Entire rear panel to be smooth aluminum plate for Chevron graphics.	$1,087
3110-0124	Lower rear stainless steel tall compartment B1, 46" wide x 45" high x 26" deep. Includes bolt-on intermediate step above. Entire rear panel to be smooth aluminum plate for Chevron graphics.	$1,257
3110-0125	Upper Storage Tunnel to have bolt-in side panels to enclose the sides of the tunnel.	$604
3110-0128	Full Height Rear Compartment with smooth plate panels. The rear compartment to be 36" due to the enhanced extended compartment and double door options.	$1,383
3110-0129	Full Height Rear Compartment with Officer Side Storage Tunnel. Includes smooth plate panels and storage access door with push button latch. The rear compartment to be 36" due to the enhanced extended compartment and double door options.	$1,503
3110-0130	Rear end tanker. Includes smooth plate upper and lower panels and a smooth plate center strip for a Jet or Newton Dump application.	$630
3110-0131	Full Height Rear Compartment with Officer Side Storage Tunnel. Includes smooth plate panels and storage access door with push button latch. Includes stepped upper horizontal tube to reduce hosebed height from ground over tank area.	$2,283

3110-0132	Bolt-on diamond plate tailboard (full width of rear compartment). Additional 10" of tailboard to run full width of body ("T" shaped tailboard). Includes the enhanced extended side compartment frame work and handrails - (1) vertical on trailing edge of body opposite side of ladder and handrail(s) horizontal below hosebed.	$2,361
3110-0133	Rear end tanker. Includes smooth plate upper and lower panels, a smooth plate center strip for a Jet or Newton Dump application and upper area access door for thru the tank storage.	$741
3110-0136	Full Height Rear Compartment with Upper Ladder Storage Compartment. Includes smooth plate panels. Includes area for storage of (1) 24', (1) 14', (1) 10' Attic, (4) pike poles and a lift-up storage access door with push buton latches (wire to door ajar). Lift-up door to use plunger style hold open device. Includes "NO STEP" tags located on outboard ends and positioned to be read from the open position of the door.	$2,143
3110-0140	Rearend assembly with 3/4 height rear end and dual dry chemical access doors. The upper access areas to either side of the center section to provide access to the dry chemical vessel and the nitorgen bottle(s). For use with Industrial products only.	$943
3110-0142	Upper rear compartment stepped for use newton dump.	$197
3110-0144	Bolt-on diamond plate tailboard (full width of rear compartment). Additional 10" of tailboard to run full width of body ("T" shaped tailboard). Includes the enhanced extended side compartment frame work and handrails - (1) vertical on trailing edge of body opposite side of ladder and handrail(s) horizontal below hosebed on trailing edge of the intermediate step.	$2,361
3110-0145	Full Height Rear Compartment with smooth plate panels.	$1,326
3110-0146	Rear end with full height compartment. Includes diamond plate panels and double upper extrusions below hosebed area. Interior of compartment to be transverse side to side.	$1,536
3110-0147	Bolt-on diamond plate 16" tailboard (full width of body). Includes (2) slanted beavertails with raised stanchions post with E-ONE logo style mounts and removable outer panels, handrails- (2) vertically on trailing edge of body/beavertail and horizontally mounted handrail below hosebed on trailing edge of intermediate step.	$791
3110-0148	Bolt-on tailboard compartments located to the driver and officer side of B1. The bolt-on tailboard compartments to be 64" high with embossed diamond plate compartment tops. The compartments includes hinged smooth plate door with 1/4 turn latch(es). The each compartment to have 4" gap at top of the door. Each door to be wired into door ajar indicator.	$3,028
3110-0149	Full Height Rear Compartment with Upper Ladder Storage Compartment. Includes smooth plate panels. Includes area for storage of (1) 24', (1) 14', (1) 10' Attic, (2) pike poles and a drop down storage access door with Tri-Mark latch (wire to door ajar).	$2,223
3110-0150	Upper Storage Compartment to hold (1) 17' Little Giant ladder. Little giant ladder to be located on driver side of storage tunnel stop bracket included approximately 58" back from opening.	$604
3110-0151	Bolt-on diamond plate tailboard (full width of rear compartment). Additional 5.5" of tailboard to run full width of body ("T" shaped tailboard). Includes the enhanced extended side compartment frame work with diamond plate compartment tops, (1) officer side lower area folding step. Driver side includes (1) upper hosebed mounted handrail (as applicable) and handrails- (2) vertically on trailing edge of body and horizontally mounted handrail(s) below hosebed.	$2,361
3110-0152	Upper Storage Compartment divider to be located offset 26" from officer side. Officer side of divider to be enclosed to 86" deep and driver side of divider to be enclosed to 72" deep.	$604
3110-0153	Rear access into the enhanced extended portion of the L2 and R2 compartments. Includes smooth plate access doors with (2) push button latches each (wired to door ajar).	$773
3110-0156	Upper Storage Compartment to hold (1) 17' Little Giant ladder, (1) 24' 2-section ladder, (1) 14' roof ladder, (1) 10' attic ladder and (2) pike poles.	$604
3110-0157	Rear end with Upper Storage Compartment. Includes smooth plate panels. Includes area for misc. storage and vertical hinged double doors with D-ring latch (wire to door ajar).	$2,143
3110-0158	Bolt-on diamond plate 16" tailboard (full width of body). Includes handrails- (2) vertical on trailing edge of body and horizontal mounted handrail(s) below hosebed.	$1,220
3110-0159	Full Height Rear Compartment with smooth plate panels for mini pumper. Compartment width will be 44" wide.	$1,048
3110-0163	Enhanced extended rear end with tall rear compartment and with officer side storage tunnel. Driver side enhanced extended to be be Pumper style and officer to be Recue Pumper style.Officer side hosebed extrusion to be stepped for storage tunnel. Included are diamond plate tailboard full width of the rear compartment, smooth plate panels and storage access door (wired to door ajar) with push button latch.	$2,520
3110-0164	Bolt-on diamond plate 24" tailboard (full width of body). Includes (2) squared off 12" deep beavertails (no stanchions) with removable outer panels and handrails- (2) vertical on trailing edge of body and horizontal mounted handrail(s) below hosebed. The outer beavertail panels to be aluminum smooth plate to allow for chevron striping. For use with swivel style rear tank dump only.	$1,347
3110-0165	Full Height Rear Compartment with Driver Side Storage Tunnel. Includes smooth plate panels and storage access door with push button latch. The rear compartment to be 36" due to the enhanced extended compartment and double door options.	$1,503
3110-0166	Full height rear compartment with officer side storage tunnel. Includes bolt-on intermediate step above. SS eMAX only.	$1,394
3110-0167	Full Height Rear Compartment with Upper Storage Compartment and Officer Side Ladder Tunnel. Includes smooth plate panels and storage access doors with Tri-Mark model 030-1300 door latches. The upper tunnel access door to be horizontally hinged lift-up with gas shock. The upper tunnel to have on the officer side a stop at 128" and on the driver side a stop at 72" from rear of truck.	$2,712
3110-0168	Bolt-on diamond plate tailboard (full width of rear compartment). Additional 5" of tailboard to run full width of body ("T" shaped tailboard). Includes the enhanced extended side compartment frame work, (1) officer side lower area folding step and handrails- (2) vertically on trailing edge of body and horizontally mounted handrail(s) below hosebed.	$1,724
3110-0170	Lower Rear Compartment with Officer Side Storage Tunnel. Includes smooth plate panels and storage access door with push button latch.	$1,289

3110-0172	Bolt-on diamond plate 14" tailboard full width of body with Bustin Tread, provides flat back body design. Includes rear of body hand rails.	$1,117
3110-0175	Lower Rear Compartment only. Upper section to be smooth plate panel. Includes smooth plate panels. Upper section to be set back 8" with diamond plate step with gator grip.	$2,538
3110-0176	Full Height Rear Compartment. Includes smooth plate panels. B1 to be as tall as possible (remove traffic advisor platework).	$1,231
3110-0177	Bolt-on diamond plate 12" tailboard (full width of body). Includes (2) squared off beavertails (no stanchions) with removable outer panels and (2) vertical mounted handrails on trailing edge of body.	$791
3110-0178	Full height rear compartment. Includes smooth plate panels. Bolt-on diamond plate tailboard (full width of rear compartment). Includes the driver side rescue style enhanced extended side compartment frame work with diamond plate compartment tops, officer side pumper style enhanced extended side compartment frame work with diamond plate compartment top. Officer side lower rear compartment will be transverse with B1. Handrail included and located: (1) driver upper hosebed mounted handrail (as applicable) and handrails- (2) vertically on trailing edge of body and horizontally mounted handrail(s) below hosebed.	$2,908
3110-0180	Bolt-on diamond plate 14" tailboard (full width of body). For use with rear ladder application. Includes handrails- (1) mounted vertical on trailing edge of body opposite side of ladder and handrail(s) horizontal below hosebed.	$1,087
3110-0181	Rear flip down tailboard. Includes indicator in cab when the tailboard is in the down position. Includes handrails- (2) vertically on trailing edge of body and horizontally mounted handrail(s) below hosebed.	$3,811
3110-0182	Full Height Rear Compartment with Upper Storage Compartment. Includes diamond plate panels. Includes area for misc. storage and a drop down storage access door with a D-ring latch (wire to door ajar).	$2,143
3110-0183	Full height rear compartment with upper ladder storage compartment. Includes smooth plate panels. Includes area for storage of (1) 24',(1)14',(1)10' attic, (2) pike poles and a drop down storage access door with push button latches (wire to door ajar).note door to open up past 90 degrees.	$2,143
3110-0184	(2) bolt-on compartments. Locate (1) each side of B1 - driver side to have 13" wide opening and officer side to have 16" wide opening. Each compartment includes a hinged smooth plate door (with 4" gap at top for connecting of hose stored in compartment) with D-Ring latch (wired into door ajar indicator), removable slat flooring and Gator Grip compartment top. Lower hosebed access step (one each side) to be mounted to inboard side of compartment.	$1,934
3110-0185	Upper and Lower Rear Compartment. Includes smooth plate panels. Upper compartment to be as tall as possible (remove traffic advisor platework).	$1,903
3110-0186	Full Height Rear Compartment with Officer Side Storage Tunnel. Includes smooth plate panels and storage access door with push button latch. Area just below hosebed for discharge pipe routing above the rear compartment. Includes stepped upper horizontal tube to reduce hosebed height from ground over tank area.	$2,534
3110-0188	Bolt-on diamond plate 10" tailboard (full width of body). For use with rear ladder application. Includes a handrail vertically mounted on trailing edge of body opposite side of ladder.	$945
3110-0189	Full Height Rear Compartment with Officer Side Storage Tunnel. Includes smooth plate panels and storage access door with push button latch (remove traffic advisor platework).	$1,168
3110-0190	Lower rear stainless steel short compartment B1, 46" x 35" high x 26" deep. Includes intermediate step above. Side walls removed to allow a Little Giant ladder to be slid in from compartment R3. Provide a stainless steel bolt-on panel to conceal and protect ladder when stored.	$1,344
3110-0191	Bolt-on diamond plate 14" tailboard between rear side compartments with Bustin Tread. Includes hand rails (2) vertically on trailing edge of body and horizontally mounted hand rail below hose bed.	$1,117
3110-0193	Full Height Rear Compartment with Driver Side Storage Tunnel. Includes smooth plate panels and storage access door with push button latch.	$1,610
3110-0194	Full Height Rear Compartment with smooth plate panels. The B1 compartment to be 40" wide, full depth (no compartment break) and as tall as possible (remove traffic advisor platework).	$1,610
3110-0195	Full Height Rear Compartment. Includes smooth plate panels. The rear compartment to be 36" due to the enhanced extended compartment and double door options.	$1,161
3110-0196	Rear end assembly with dual dry chemical access doors. The upper access areas to either side of the center section to provide access to the dry chemical vessel and the nitrogen bottle(s) to include (2) dividers.	$1,953
3110-0198	B1 floor to be recessed as applicable to allow for booster reel and or dealer installed equipment to be located below newton dump/applicable dump without interference.	$512
3110-0199	Compartment B1, 24" wide x 10" high x 26" deep, located between full length chassis frame rails. The compartment shall include a bottom hinged drop-down access door using a D-ring latch (wire to door ajar).	$984
3110-0200	Full Height Rear Compartment with Driver and Officer Side Storage Tunnels. Includes smooth plate panels and storage access doors with d-ring latches.	$1,317
3110-0201	Bolt-on diamond plate tailboard (full width of rear compartment). Additional 10" of tailboard to run full width of body ("T" shaped tailboard). Includes the enhanced extended side compartment frame work and (1) handrail vertical on trailing edge of driver's side of body and horizontal mounted handrail (driver's side) below hosebed.	$2,361
3110-0202	Upper and Lower Rear Compartment. Includes upper and lower sanded smooth plate panels. Upper rear compartment door to be offset to driver side constructed of smooth plate. Upper rear compartment to be 56" wide for little giant ladder storage. (2) 1.5" x 4" extrusions to be stacked between upper and lower compartments for directional light mounted under intermediate rear step.	$2,325

3110-0203	Bolt-on diamond plate tailboard (full width of rear compartment). Includes the enhanced extended side compartment frame work with diamond plate compartment tops raised 12" to cover rear piping, (1) officer side lower area folding step. Driver side includes (1) upper hosebed mounted handrail (as applicable) and handrails- (2) vertically on trailing edge of body and horizontally mounted handrail(s) below hosebed.	$1,209
3110-0204	Lower rear stainless steel tall compartment B1, 46" wide x 50" high x 26" deep. Includes bolt-on intermediate step above. Entire rear panel to be smooth aluminum plate for Chevron graphics.	$1,339
3110-0205	Full Height Rear Compartment with smooth plate panels for mini pumper. Compartment opening dimensions will be approximately 44" wide x 38" wide. Extra compartment height will reduce the hosbed by approximately 11".	$1,048
3110-0206	Full Height Rear (no compartment). Includes opening for access to rear mount pump panel and smooth plate panels. Includes openings for preconncts to driver's side of rear pump panel	$1,492
3110-0207	Lower rear stainless steel short compartment B1, 46" wide x 35" high x 26" deep, without an intermediate rear step. Entire rear panel to be smooth aluminum plate for Chevron graphics.	$868
3110-0208	Bolt-on diamond plate 10" tailboard (full width of body). For use with a folding step application. Includes handrails- (2) vertical on trailing edge of body and handrail(s) horizontal below hosebed.	$726
3110-0209	Upper and Lower Rear Compartment. Includes smooth plate panels. B1 to be 36" wide due to enhanced extended feature and hinged door(s) as required.	$2,510
3110-0210	Bolt-on diamond plate 10" tailboard (full width of body). For use with folding step application. Includes handrails- (1) vertically on trailing edge of body opposite each side of body and handrail(s) horizontally below hosebed.	$945
3110-0211	Bolt-on diamond plate tailboard (full width of rear compartment). Includes the enhanced extended side compartment frame work with diamond plate compartment tops, (2) recessed folding steps in lower area (1) officer side, (1) driver side. Driver side includes (1) upper hosebed mounted handrail (as applicable) and handrails- (2) vertically on trailing edge of body and horizontally mounted handrail(s) below hosebed.	$1,133
3110-0212	Bolt-on diamond plate tailboard (full width of hosebed). Additional 10" of tailboard to run full width of body ("T" shaped tailboard). Includes the extended side compartment frame work and handrails- (2) vertical mounted on trailing edge of body and horizontal mounted handrail(s) below hosebed.	$2,361
3110-0215	Upper Storage Compartment to hold (1) 10' attic ladder, (4) pike poles, and (2) 6" x 10' hard suction hoses. Includes stop bracket included approximately 130" back from opening. An enclosed frontal area shall be included as part of the tunnel design.	$604
3110-0216	Bolt-on diamond plate 12" tailboard (full width of body). Includes (2) squared off beavertails with stanchions and removable outer panels and handrails- (2) vertical on trailing edge of body and horizontal mounted handrail(s) below hosebed.	$791
3110-0217	(1) Officer side rear pump module roof top compartment. Includes hinged raised aluminum smooth plate with black Scorpion coating (IPOS diamond plate) compartment lid with turn latches and grab handle(s). Compartment to have (1) bracket mounted LED light and wired to door ajar indicator in cab. Outboard side of body to run full width and wrap around the rear and meet with the end of the hosebed end.	$1,668
3110-0218	(1) Driver side rear pump module roof top compartment. Includes hinged raised smooth plate with black Scorpion coating (IPOS diamond plate) compartment lid with turn latches and grab handle(s). Compartment to have (1) bracket mounted LED light and wired to door ajar indicator in cab. Outboard side of body to run full width and wrap around the rear and meet with the end of the hosebed end.	$1,668
3110-0220	Bolt-on 10" tailboard (full width of body) aluminum smooth plate with black Scorpion coating (IPOS diamond plate). For use with rear ladder application. Includes handrails- (1) vertically on trailing edge of body opposite side of ladder and handrail(s) horizontally below hosebed.	$1,240
3110-0221	Full height rear compartment with upper storage compartment. Includes smooth plate panels. Includes area for misc. storage and a lift up storage access door with push button latches (wire to door ajar).	$2,307
3110-0222	Bolt-on 10" diamond plate tailboard (full width of rear compartment). Includes the enhanced extended side compartment frame work. For use with rear ladder application. Includes handrails (1) vertical mounted on trailing edge of body opposite side of ladder and (1) horizontal mounted handrail(s) below hosebed.	$2,067
3110-0223	Full Height Rear Compartment with Officer Side Storage Tunnel. Includes smooth plate panels and storage access door with d-ring latch.	$1,168
3110-0224	Rear body panels to be upgraded from smooth aluminum plate to un-painted smooth FRP.	$280
3110-0225	Full Height Rear Compartment with Upper Ladder Storage Compartment. Includes smooth plate panels. Includes area for storage of (1) 24', (1) 14', (1) 10' Attic, (2) pike poles and a lift up storage access door with push button latches (wire to door ajar). The door shall be held in place with a plunger style hold open device.	$2,143
3110-0226	Bolt-on diamond plate 22" tailboard between rear side compartments with Bustin Tread. Includes hand rails (2) vertically on trailing edge of body and horizontally mounted hand rail below hose bed.	$1,117
3110-0227	Upper and lower rear compartment. Includes smooth plate panels. For use with raised lower rear body (B1 is 25" high).	$1,789
3110-0228	Bolt-on diamond plate 12" tailboard (full width of body). Includes (2) squared off beavertails (no stanchions) with removable outer panels and handrails- (2) vertical trailing edge of body and horizontal mounted handrail(s) below hosebed. Beavertails and outer panels to be smooth plate painted job color. Tailboard to diamond plate painted black durabak.	$1,952
3110-0229	Lower rear stainless steel tall compartment B1, 46" wide x approx. 64" high x 26" deep, but door opening remains in the normal 45" high position. Includes bolt-on intermediate step above the door opening. Entire rear panel to be smooth plate for Chevron graphics.	$1,391

3110-0230	Bolt-on 10" tailboard (full width of body) aluminum smooth plate with black Scorpion coating (rough finish) IPOS diamond plate. For use with rear ladder application. Includes handrails- (1) vertically on trailing edge of body opposite side of ladder and handrail(s) horizontally below hosebed.	$1,240
3110-0232	Bolt-on diamond plate 22 inch tailboard tailboard (full width of body). Includes (2) squared off beavertails (no stanchions) with removable outer panels and handrails- (2) vertical on trailing edge of body and horizontal mounted handrail(s) below hosebed.	$1,237
3110-0233	Bolt-on tailboard compartments located to the driver and officer side of B-1. The bolt-on tailboard compartments to be full height just below hosebed. Doors to be (1) Piece full height as applicable and hinged to the outside with push-button latches. Install shelf tracking in each compartment full height	$3,584
3110-0234	Upper Storage Compartment to hold (1) stokes basket in place of standard ladder components. Stokes basket to be located on officer side of storage tunnel. Stop bracket full width across tunnel shall be included.	$171
3110-0235	Step full width rear intermediate. Intermediate rear step to be located just below the upper ladder storage compartment.	$818
3110-0236	Step full width rear intermediate. Intermediate rear step to be located just above the upper ladder storage compartment.	$818
3110-0237	Full height rear compartment with upper storage compartment. Includes smooth plate panels. Includes an area for misc. storage and a lift up storage access door with a D-ring latch (wire to door ajar) and a plunger style hold open device. To include a storage sleeve for (2) backboards (72"X16"X2" each) offset to the officer side with a stop at 80".	$2,467
3110-0238	Bolt-on diamond plate 18" tailboard (full width of body). Includes handrails- (2) vertically on trailing edge of body and handrail(s) horizontally below hosebed.	$1,801
3110-0239	Bolt-on diamond plate 10" tailboard (full width of body). Includes handrail - (1) vertically on officer side trailing edge of body and horizontally mounted handrail(s) below hosebed.	$1,055
3110-0240	Lower Rear Compartment with access door above to the ladders storage thru tank. Includes smooth plate panels and storage access door with push button latches.	$1,745
3110-0242	Bolt-on diamond plate 25" tailboard between rear side compartments with Bustin Tread. Includes hand rails (2) vertically on trailing edge of body and horizontally mounted hand rail below hose bed.	$1,117
3110-0243	Bolt-on diamond plate 16" tailboard (full width of body). For use with rear ladder application. Includes handrails- (1) vertically on trailing edge of body opposite side of ladder and handrail(s) horizontally below hosebed.	$1,736
3110-0245	Bolt-on diamond plate 18" tailboard (full width of body). Includes (2) squared off beavertails (no stanchions) with removable outer panels and handrails- (2) vertical on trailing edge of body and horizontal mounted handrail(s) below hosebed. Outer panels to be smooth plate painted job color.	$1,178
3110-0246	Bolt-on diamond plate 18" tailboard (full width of body). For use with rear ladder application. Includes handrails- (1) vertically on trailing edge of body opposite side of ladder and handrail(s) horizontally below hosebed.	$1,801
3110-0247	Full Height Rear Compartment with Upper Storage Compartment and Officer Side Storage Tunnel. Includes smooth plate panels and storage access door with push button latch. Upper compartment to be approx 17" high x 38" wide x 26" deep.	$1,648
3110-0248	Full Height Rear Compartment. Includes smooth plate panels, angled rear body with flip down tailboard and handrails- (2) vertical on trailing edge of body and horizontal mounted handrail(s) below hosebed.	$3,345
3110-0249	Bolt-on diamond plate 10" tailboard (full width of body). Includes handrails- (2) vertically on trailing edge of body. Must be used with hosebed dividers that include hand hold cut outs (the horizontally mounted handrail(s) are not included).	$1,055
3110-0250	Top of body stepping surface plate work (compartment tops and enhanced extended compartment top at rear of body) shall be smooth plate painted black Durabak.	$742
3110-0251	Full Height Rear Compartment with Officer Side Storage Tunnel. Includes flush smooth plate rear facing body panels and storage access door with push button latch.	$1,338
3110-0252	Enhanced extended exterior inside facing walls at either side of B1 compartment opening shall be smooth plate painted black durabak.	$610
3110-0253	Full Height Rear Compartment with smooth plate panels. Compartment material to be 5083-H321.	$1,355
3110-0254	Single low rear compartment. For use with low hosebed. Includes smooth plate panels.	$1,161
3110-0255	Full Height Rear Compartment 44" wide. Includes smooth plate panels.	$1,257
3110-0256	Bolt-on diamond plate 14" tailboard (full width of body). For use with dual rear ladder application. Includes handrail horizontally mounted below hosebed.	$1,087
3110-0259	Bolt-on diamond plate 14" tailboard (full width of body). Includes handrails- (2) vertically on trailing edge of body and horizontally mounted handrail(s) below hosebed.	$1,196
3110-0260	(1) officer side rear pump module extra width (inboard side) roof top compartment. Includes hinged raised compartment lid with turn latches and grab handle(s). Compartment to have (1) Amdor LED strip light and wired to door ajar indicator in cab. Outboard side of body to run full width and wrap around the rear and meet with the end of the hosebed end.	$2,749
3110-0261	(1) driver side rear pump module extra width (inboard side) roof top compartment (offset rearward and sized to allow deck gun to stow without interfering with hosebed area). Includes hinged raised compartment lid with turn latches and grab handle(s). Compartment to have (1) Amdor LED strip light and wired to door ajar indicator in cab. Outboard side of body to run full width and wrap around the rear and meet with the end of the hosebed.	$2,415
3110-0262	Full Height Rear Compartment with Upper Storage Compartment and Officer Side Storage Tunnel. Upper Storage Compartment to be fully enclosed drop in / bolt in box with top. Compartment to be full height X full width of opening and 86" deep with a vertical partition located 26" from officer side. Driver side of partition to have a stop located 72" from box opening. Includes smooth plate panels and storage access doors with push button latches.	$5,063

3110-0263	Lower Rear Compartment with Officer Side Storage Tunnel. Includes smooth plate panels and storage access door with push button latch. Includes bolt-on panel between recessed traffic advisor and lower compartment for rear tank fill.	$1,462
3110-0264	Lower rear stainless steel tall compartment B1, 46" wide x 60" high x 26" deep. Entire rear panel to be smooth FRP plate for Chevron graphics.	$1,281
3110-0265	Bolt-on diamond plate 16" tailboard full width of body with Bustin Tread. This provides a flat back body design. Includes hand rails, (2) vertically on trailing edge of body and horizontally mounted hand rail below hose bed.	$1,153
3110-0266	Rear end tanker. Includes smooth plate upper and lower panels, a smooth plate center strip for a Jet or Newton Dump application, driver, and officer side access doors for storage tunnels.	$821
3110-0267	Upper and Lower Rear Compartment. Includes smooth plate panels. Upper compartment to be as tall as possible (remove traffic advisor platework).	$2,541
3110-0269	Lower rear stainless steel short and narrow compartment B1, 26" wide x 35" high x 26" deep, for use with special lower rear panel plumbing options. Includes 46" wide intermediate rear step above. Entire rear panel to be smooth aluminum plate for Chevron graphics.	$1,096
3110-0273	Full Height Rear Compartment with 4" high permanent diamond plate shelf for a Upper and Lower Rear Compartment design. Includes smooth plate panels. Upper compartment to be as tall as possible (remove traffic advisor platework).	$2,541
3110-0274	Bolt-on diamond plate 24" tailboard (full width of body). Includes (2) squared off 10" deep beavertails (no stanchions) with removable outer panels and handrails- (2) vertical on trailing edge of body and horizontal mounted handrail(s) below hosebed. For use with swivel style rear tank dump only.	$1,157
3110-0275	Lower rear stainless steel tall compartment B1, 46" wide x approx. 64" high x 34" deep, door opening 53" high position. Includes bolt-on intermediate step above the door opening. Entire rear panel to be smooth plate for Chevron graphics.	$1,638
3110-0276	Lower Rear Compartment with access above to the ladders storage thru tank. Includes smooth plate panels and stepped upper horizontal tube to reduce hosebed height from ground over tank area.	$2,015
3110-0279	Bolt-on diamond plate 20" tailboard (full width of body). Includes (2) slanted beavertails with lowered height approx 5.5" from standard to inhibit interferance as stowed with beacon lights as optioned (no stanchions) with removable outer panels and handrails- (2) vertical on trailing edge of body and horizontal mounted handrail(s) below hosebed.	$1,279
3110-0281	Full Height Rear Compartment with Upper Storage Compartment and Officer Side Storage Tunnel. Includes smooth plate panels and storage access doors with "D"-ring latches.	$2,229
3110-0282	Single low rear compartment. For use with low hosebed. Includes smooth plate panels. B1 compartment 28" deep.	$1,001
3110-0283	Full Height Rear Compartment with Upper Ladder Storage Compartment. Includes smooth plate panels. Includes area for storage of (1) 24', (1) 14', (1) 10' Attic, (2) pike poles and a drop down storage access door with D-Ring latch (wire to door ajar).	$2,221
3110-0284	Bolt-on diamond plate 18" tailboard (full width of body). Includes (2) slanted beavertails (no stanchions) with removable outer panels and handrails- (2) vertically on trailing edge of body.	$1,038
3110-0285	The rearend area of the extra wide roof top compartment above the Zico access ladder to be recessed in 16". The stepping area to be embossed diamond plate.	$772
3110-0286	Full Height Rear Compartment with Upper Storage Compartment and Officer Side Storage Tunnel. Includes smooth plate panels and storage access doors with "D"-ring latches. Divider to be full length and be positioned 27" off of driver side compartment wall or as applicable close to fill tower on water tank. Area to the left of the divider to have a stop and be 84" deep. Area to the right of the divider to have a stop and be 75" deep.	$2,262
3110-0289	Pumper rear mount rear end with lower pump panel provisions and upper pump maintenance access door with driver side ladder tunnel. Includes smooth plate panels and storage access doors with D-ring latches.	$1,228
3110-0290	Bolt-on diamond plate 12" tailboard (full width of body). For use with rear ladder application. Includes handrails- (1) vertical on trailing edge of body opposite side of ladder and handrail(s) horizontal below hosebed.	$1,025
3110-0293	Bolt-on diamond plate 12" tailboard full width of body with Bustin Tread. This provides a flat back body design. Includes hand rails, (2) vertically on trailing edge of body and NO horizontally mounted hand rail below hose bed.	$1,014
3110-0294	Lower rear stainless steel short compartment B1, 46" wide x 35" high x 26" deep, without an intermediate rear step for hinged doors. Entire rear panel to be smooth aluminum plate for Chevron graphics.	$868
3110-0296	Lower Rear Compartment only. Upper section to be smooth plate panel. Includes smooth plate panels.	$1,087
3110-0298	Full Height Rear Compartment with Upper Ladder Storage Compartment. Includes smooth plate panels. Includes area for storage of (1) 28', (1) 14', (1) 10' Attic, (1) Dry wall hook, (2) pike poles and a drop down storage access door with push buton latches (wire to door ajar).	$2,143
3110-0299	1" X 1.5" extrusion added to lower B1 compartment door opening to form a 10" wide notch offset to officer side for 5" LDH hose connected to customer supplied and installed valve stored in B1. This will also require floor mounted rollout tray to be raised to clear lower door opening.	$364
3110-0300	Full Height Rear Pump Panel Compartment with officer side ladder tunnel storage with smooth plate door secured with D-Ring style latch. Includes smooth plate panels, angled rear body with flip down tailboard and handrails as applicable. Pump Panels to be recessed in the rear body and enclosed on all sides.	$5,344
3110-0302	Full Height Rear Compartment with Upper Ladder Storage Compartment. Includes smooth plate panels. Includes area for storage of (1) 24', (1) 14', (1) 10' Attic, (2) NY Roof Hook style pike poles and a drop down storage access door with push buton latches (wire to door ajar).	$2,143

3110-0303	Full Height Rear Compartment with Driver and Officer Side Storage Tunnels. Includes smooth plate panels and storage access doors with push button latches tied to door ajar. Rear compartment to be dual purpose and equipped with a 22" wide door opening on the driver side and a rear body panel added in the remaining space for a rear slam strip to accommodate a jet dump and a direct tank fill in the lower officer side area of the rear compartment. Upper area above slam strip to include a vertical hinged access door of smooth plate aluminum matching rear of body selected finish with stainless steel hinge, push button latch and rubber impact bumper to cushion door on handrail in open position.	$2,725
3110-0304	Full Height Rear Pump Panel Compartment. Includes smooth plate panels, angled rear body with flip down tailboard and handrails as applicable. Pump Panels to be recessed in the rear body and enclosed on all sides.	$5,144
3110-0305	Lower rear stainless steel tall compartment B1, 46" wide x 45" high x 26" deep without intermediate step above. Entire rear panel to be smooth aluminum plate for Chevron graphics.	$1,038
3110-0306	Lower Rear Compartment with Officer Side Storage Tunnel. Includes smooth plate panels and storage access door with "D"-ring.	$1,289
3110-0307	Rearend assembly with 3/4 height rear end and (3) dry chemical access doors. The upper access areas to the center section to provide access to the dry chemical vessel and two access doors to the nitorgen bottle(s). For use with Industrial products only.	$943
3110-0308	Upper rear stainless steel short compartment B2, 39" wide x 12" high x 26" deep. Entire rear panel to be smooth FRP plate for Chevron graphics.	$877
3110-0309	Bolt-on 3/16" (.1875") smooth plate painted black Durabak 10" tailboard (full width of body). For use with rear ladder application. Includes handrails- (1) vertical on trailing edge of body opposite side of ladder and handrail(s) horizontal below hosebed.	$1,181
3110-0310	Full height rear compartment with upper ladder storage compartment. Includes smooth plate panels. Includes area for storage of (1) 24',(1)14',(1)10' attic, (3) pike poles, including (1) one each 6', 8' and 10' with APH style hooks, a lift up storage access door with hold open springs and push button latches (wire to door ajar) note door to open up 90 degrees. There shall be label 'DO NOT STEP' to be applied "upside down" as viewed from the ground at the bottom of the lift-up door.	$2,351
3110-0311	Bolt-on diamond plate tailboard (full width of rear compartment). 20" tailboard to run full width of body ("T" shaped tailboard). Includes the extended side compartment frame work and handrails- (2) vertical on trailing edge of body and horizontal mounted handrail(s) below hosebed.	$1,801
3110-0312	Bolt-on diamond plate 18" tailboard (full width of body). Includes (2) slanted beavertails (no stanchions) with removable outer smooth plate panels painted job color and handrails- (2) vertically on trailing edge of body and horizontally mounted handrail(s) below hosebed.	$1,971
3110-0313	Full Height Rear Compartment with Driver Side Storage Tunnel. Includes smooth plate panels and storage access door with D-ring latch.	$1,210
3110-0314	Rear flip down tailboard to be painted Durabak black. Includes indicator in cab when the tailboard is in the down position. Includes handrails- (2) vertically on trailing edge of body and horizontally mounted handrail(s) below hosebed.	$4,764
3110-0315	Upper rear compartment depth to be approximately 40" deep.	$282
3110-0316	Lower Rear Compartment only 46" wide opening. Upper section to be smooth plate panel. Includes smooth plate panels.	$1,254
3110-0317	Rear flip down tailboard. Includes indicator in cab when the tailboard is in the down position. Includes handrails- (1) vertical on trailing edge of body opposite side of ladder and handrail(s) horizontal below hosebed.	$3,811
3110-0318	Upper and lower rear compartment. Includes smooth plate panels. For use with raised lower rear body (B1 is 29" high).	$1,789
3120-0000	Officer half side body with 24" wide forward and 36" wide rearward compartmentation. Includes adjustable ladder tracks.	$4,362
3120-0001	Officer half side body with 24" wide forward and 50" wide rearward extended compartmentation. Includes adjustable ladder tracks.	$4,973
3120-0003	Officer half side body with 30" wide forward and 36" wide rearward compartmentation. Includes adjustable ladder tracks.	$4,668
3120-0004	Officer half side body with 36" wide forward and 36" wide rearward compartmentation. Includes adjustable ladder tracks.	$4,997
3120-0005	Officer half side body with 42" wide forward and 42" wide rearward compartmentation. Includes adjustable ladder tracks.	$5,343
3120-0006	Officer half side body with 48" wide forward and 48" wide rearward compartmentation. Includes adjustable ladder tracks.	$5,718
3120-0007	Officer half side body with 30" wide forward and 50" wide rearward extended compartmentation. Includes adjustable ladder tracks.	$5,277
3120-0008	Officer half side body with 36" wide forward and 50" wide rearward extended compartmentation. Includes adjustable ladder tracks.	$5,604
3120-0009	Officer half side body with 42" wide forward and 56" wide rearward extended compartmentation. Includes adjustable ladder tracks.	$5,956
3120-0010	Officer half side body with 48" wide forward and 62" wide rearward extended compartmentation. Includes adjustable ladder tracks.	$6,329
3120-0011	Officer half side body with 24" wide forward and 50" wide rearward enhanced extended compartmentation. Includes adjustable ladder tracks.	$5,254
3120-0012	Officer half side body with 30" wide forward and 50" wide rearward enhanced extended compartmentation. Includes adjustable ladder tracks.	$5,557
3120-0013	Officer half side body with 36" wide forward and 50" wide rearward enhanced extended compartmentation. Includes adjustable ladder tracks and ladder brackets.	$5,883
3120-0014	Officer half side body with 42" wide forward and 56" wide rearward enhanced extended compartmentation. Includes adjustable ladder tracks.	$6,233
3120-0015	Officer half side body with 48" wide forward and 62" wide rearward enhanced extended compartmentation. Includes adjustable ladder tracks.	$6,607

3120-0016	Officer 3/4 side body with upper and lower compartmentation. Includes 24" wide forward and 36" wide rearward lower compartments and (3) opening upper compartments.	$5,888
3120-0017	Officer 3/4 side body with full height 24" wide forward and 36" wide rearward compartmentation. Includes (1) 56" wide compartment over the wheel well.	$5,453
3120-0018	Officer 3/4 side body with upper and lower compartmentation. Includes 30" wide forward and 36" wide rearward lower compartments and (3) opening upper compartments.	$6,269
3120-0019	Officer 3/4 side body with upper and lower compartmentation. Includes 36" wide forward and 36" wide rearward lower compartments and (3) opening upper compartments.	$6,677
3120-0020	Officer 3/4 side body with upper and lower compartmentation. Includes 42" wide forward and 42" wide rearward lower compartments and (3) opening upper compartments.	$7,114
3120-0021	Officer 3/4 side body with upper and lower compartmentation. Includes 48" wide forward and 48" wide rearward lower compartments and (3) opening upper compartments.	$7,582
3120-0022	Officer 3/4 side body with full height 30" wide forward and 36" wide rearward compartmentation. Includes (1) 56" wide compartment over the wheel well.	$5,835
3120-0023	Officer 3/4 side body with full height 36" wide forward and 36" wide rearward compartmentation. Includes (1) 56" wide compartment over the wheel well.	$6,240
3120-0024	Officer 3/4 side body with full height 42" wide forward and 42" wide rearward compartmentation. Includes (1) 56" wide compartment over the wheel well.	$6,678
3120-0025	Officer 3/4 side body with full height 48" wide forward and 48" wide rearward compartmentation. Includes (1) 56" wide compartment over the wheel well.	$7,146
3120-0026	Officer 3/4 side body with 24" wide forward and 50" wide rearward extended compartmentation. Includes (1) 56" wide compartment over the wheel well.	$6,063
3120-0027	Officer 3/4 side body with 30" wide forward and 50" wide rearward extended compartmentation. Includes (1) 56" wide compartment over the wheel well.	$6,443
3120-0028	Officer 3/4 side body with 36" wide forward and 50" wide rearward extended compartmentation. Includes (1) 56" wide compartment over the wheel well.	$6,853
3120-0029	Officer 3/4 side body with 42" wide forward and 56" wide rearward extended compartmentation. Includes (1) 56" wide compartment over the wheel well.	$7,289
3120-0030	Officer 3/4 side body with 48" wide forward and 62" wide rearward extended compartmentation. Includes (1) 56" wide compartment over the wheel well.	$7,757
3120-0031	Officer 3/4 side body with 24" wide forward and 50" wide rearward enhanced extended compartmentation. Includes (1) 56" wide compartment over the wheel well.	$6,342
3120-0032	Officer 3/4 side body with 30" wide forward and 50" wide rearward enhanced extended compartmentation. Includes (1) 56" wide compartment over the wheel well.	$6,722
3120-0033	Officer 3/4 side body with 36" wide forward and 50" wide rearward enhanced extended compartmentation. Includes (1) 56" wide compartment over the wheel well.	$7,130
3120-0034	Officer 3/4 side body with 42" wide forward and 50" wide rearward enhanced extended compartmentation. Includes (1) 56" wide compartment over the wheel well.	$7,568
3120-0035	Officer 3/4 side body with 48" wide forward and 62" wide rearward enhanced extended compartmentation. Includes (1) 56" wide compartment over the wheel well.	$8,036
3120-0036	Officer side body with full height 24" wide forward and 36" wide rearward compartmentation. Includes (1) 33" wide compartment (forward) over the wheel well and (1) Zico Overhead Ladder Rack.	$15,086
3120-0037	Officer side body with full height 30" wide forward and 36" wide rearward compartmentation. Includes (1) 33" wide compartment (forward) over the wheel well and (1) Zico Overhead Ladder Rack.	$15,696
3120-0038	Officer side body with full height 36" wide forward and 36" wide rearward compartmentation. Includes (1) 33" wide compartment (forward) over the wheel well and (1) Zico Overhead Ladder Rack.	$16,347
3120-0039	Officer side body with full height 42" wide forward and 42" wide rearward compartmentation. Includes (1) 33" wide compartment (forward) over the wheel well and (1) Zico Overhead Ladder Rack.	$17,047
3120-0040	Officer side body with full height 48" wide forward and 48" wide rearward compartmentation. Includes (1) 33" wide compartment (forward) over the wheel well and (1) Zico Overhead Ladder Rack.	$17,793
3120-0041	Officer side body with full height 24" wide forward and 50" wide rearward extended compartmentation. Includes (1) 33" wide compartment (forward) over the wheel well and (1) Zico Overhead Ladder Rack.	$15,696
3120-0042	Officer side body with full height 30" wide forward and 50" wide rearward extended compartmentation. Includes (1) 33" wide compartment (forward) over the wheel well and (1) Zico Overhead Ladder Rack.	$16,306
3120-0043	Officer side body with full height 36" wide forward and 50" wide rearward extended compartmentation. Includes (1) 33" wide compartment (forward) over the wheel well and (1) Zico Overhead Ladder Rack.	$16,959
3120-0044	Officer side body with full height 42" wide forward and 56" wide rearward extended compartmentation. Includes (1) 33" wide compartment (forward) over the wheel well and (1) Zico Overhead Ladder Rack.	$17,658
3120-0045	Officer side body with full height 48" wide forward and 62" wide rearward extended compartmentation. Includes (1) 33" wide compartment (forward) over the wheel well and (1) Zico Overhead Ladder Rack.	$18,404
3120-0046	Officer side body with full height 24" wide forward and 50" wide rearward enhanced extended compartmentation. Includes (1) 33" wide compartment (forward) over the wheel well and (1) Zico Overhead Ladder Rack.	$15,977
3120-0047	Officer side body with full height 30" wide forward and 50" wide rearward enhanced extended compartmentation. Includes (1) 33" wide compartment (forward) over the wheel well and (1) Zico Overhead Ladder Rack.	$16,585

3120-0048	Officer side body with full height 36" wide forward and 50" wide rearward enhanced extended compartmentation. Includes (1) 33" wide compartment (forward) over the wheel well and (1) Zico Overhead Ladder Rack.	$17,236
3120-0049	Officer side body with full height 42" wide forward and 56" wide rearward enhanced extended compartmentation. Includes (1) 33" wide compartment (forward) over the wheel well and (1) Zico Overhead Ladder Rack.	$17,936
3120-0050	Officer side body with full height 48" wide forward and 62" wide rearward enhanced extended compartmentation. Includes (1) 33" wide compartment (forward) over the wheel well and (1) Zico Overhead Ladder Rack.	$18,683
3120-0051	Officer half side body with 36" wide forward and 36" wide rearward compartmentation. Includes adjustable ladder tracks and 30 degree rear body angle for greater angle of departure.	$5,006
3120-0052	Officer 3/4 side body with full height 24" wide forward and 36" wide rearward compartmentation. Includes (1) 56" wide compartment over the wheel well and 30 degree rear body angle for greater angle of departure.	$9,379
3120-0053	Officer 3/4 side body with full height 30" wide forward and 36" wide rearward compartmentation. Includes (1) 56" wide compartment over the wheel well and 30 degree rear body angle for greater angle of departure.	$9,676
3120-0054	Officer 3/4 side body with full height 36" wide forward and 36" wide rearward compartmentation. Includes (1) 56" wide compartment over the wheel well and 30 degree rear body angle for greater angle of departure.	$9,973
3120-0055	Officer side body with full height 24" wide forward and 36" wide rearward compartmentation. Includes (1) 33" wide compartment (forward) over the wheel well, (1) Zico Overhead Ladder Rack and 30 degree rear body angle for greater angle of departure.	$17,038
3120-0056	Officer side body with full height 30" wide forward and 36" wide rearward compartmentation. Includes (1) 33" wide compartment (forward) over the wheel well, (1) Zico Overhead Ladder Rack and 30 degree rear body angle for greater angle of departure.	$17,335
3120-0057	Officer side body with full height 36" wide forward and 36" wide rearward compartmentation. Includes (1) 33" wide compartment (forward) over the wheel well, (1) Zico Overhead Ladder Rack and 30 degree rear body angle for greater angle of departure.	$17,633
3120-0058	Stainless steel officer half side body with 48" wide forward and 48" wide rearward compartmentation (interior). Includes adjustable ladder tracks.	$6,288
3120-0059	Stainless steel officer half side body with 48" wide forward and 60" wide rearward compartmentation (interior). Includes adjustable ladder tracks.	$6,603
3120-0060	Stainless steel officer half side body with 60" wide forward and 60" wide rearward compartmentation (interior). Includes adjustable ladder tracks.	$6,729
3120-0061	Stainless steel officer 3/4 side body with full height 36" wide forward and 48" wide rearward compartmentation (interior). Includes (1) 60" wide compartment over the wheel well.	$6,867
3120-0062	Stainless steel officer 3/4 side body with full height 48" wide forward and 48" wide rearward compartmentation (interior). Includes (1) 60" wide compartment over the wheel well.	$7,859
3120-0063	Stainless steel officer 3/4 side body with full height 48" wide forward and 60" wide rearward compartmentation (interior). Includes (1) 60" wide compartment over the wheel well.	$8,254
3120-0064	Stainless steel officer 3/4 side body with full height 60" wide forward and 60" wide rearward compartmentation (interior). Includes (1) 60" wide compartment over the wheel well.	$8,409
3120-0065	Stainless steel officer side body with full height 36" wide forward and 48" wide rearward compartmentation (interior). Includes (1) 45" wide compartment (rearward) over the wheel well and (1) Zico Overhead Ladder Rack.	$17,984
3120-0066	Stainless steel officer side body with full height 48" wide forward and 48" wide rearward compartmentation (interior). Includes (1) 45" wide compartment (rearward) over the wheel well and (1) Zico Overhead Ladder Rack.	$19,572
3120-0067	Stainless steel officer side body with full height 48" wide forward and 60" wide rearward compartmentation (interior). Includes (1) 45" wide compartment (rearward) over the wheel well and (1) Zico Overhead Ladder Rack.	$22,351
3120-0068	Stainless steel officer side body with full height 60" wide forward and 60" wide rearward compartmentation (interior). Includes (1) 45" wide compartment (rearward) over the wheel well and (1) Zico Overhead Ladder Rack.	$20,452
3120-0069	Stainless steel officer side body with full height 48" wide forward and 60" wide rearward compartmentation (interior). Includes (1) 60" wide compartment over the wheel well. For use with in the hosebed area ladder storage.	$13,202
3120-0070	Stainless steel officer side body with full height 60" wide forward and 60" wide rearward compartmentation (interior). Includes (1) 60" wide compartment over the wheel well. For use with in the hosebed area or thru the tank ladder storage.	$13,455
3120-0080	Officer side body with full height 36" wide forward and 36" wide rearward compartmentation. Includes (1) 33" wide compartment (forward) over the wheel well and (1) Zico Overhead Ladder Rack.	$17,492
3120-0081	Officer side body with full height 42" wide forward and 42" wide rearward compartmentation. Includes (1) 33" wide compartment (forward) over the wheel well and (1) Zico Overhead Ladder Rack.	$18,240
3120-0082	Officer side body with full height 48" wide forward and 48" wide rearward compartmentation. Includes (1) 33" wide compartment (forward) over the wheel well and (1) Zico Overhead Ladder Rack.	$19,041
3120-0083	Officer side body with full height 36" wide forward and 36" wide rearward compartmentation. Includes (1) 56" wide compartment over the wheel well and one (1)ladder storage tunnel and access door at rear.	$13,516
3120-0084	Officer side body with full height 42" wide forward and 42" wide rearward compartmentation. Includes (1) 56" wide compartment over the wheel well and one (1)ladder storage tunnel and access door at rear.	$14,263

3120-0085	Officer side body with full height 48" wide forward and 48" wide rearward compartmentation. Includes (1) 56" wide compartment over the wheel well and one (1)ladder storage tunnel and access door at rear.	$15,063
3120-0086	Officer side body with full height 42" wide forward and 42" wide rearward compartmentation. Includes (1) 56" wide compartment over the wheel well.	$11,430
3120-0087	Officer side body with full height 48" wide forward and 48" wide rearward compartmentation. Includes (1) 56" wide compartment over the wheel well. For use with thru the tank ladder storage.	$12,230
3120-0088	Officer side body with full height 60" wide forward and 42" wide rearward compartmentation. Includes (1) 33" wide compartment (forward) over the wheel well and (1) Zico Overhead Ladder Rack.	$19,897
3120-0089	Officer side body with full height 60" wide forward and 42" wide rearward compartmentation. Includes (1) 56" wide compartment over the wheel well and one (1)ladder storage tunnel and access door at rear.	$15,921
3120-0090	Officer side body with full height 60" wide forward and 42" wide rearward compartmentation. Includes (1) 56" wide compartment over the wheel well. For use with thru the tank ladder storage.	$13,087
3120-0091	Officer half side body with 36" wide rearward compartmentation. Includes adjustable ladder tracks and 30 degree rear body angle for greater angle of departure.	$2,516
3120-0092	Officer 3/4 side body with full height 36" wide rearward compartmentation. Includes (1) 56" wide compartment over the wheel well and 30 degree rear body angle for greater angle of departure.	$8,462
3120-0093	Officer half side body with 36" wide rearward compartmentation. Includes adjustable ladder tracks.	$2,693
3120-0094	Officer 3/4 side body with full height 36" wide rearward compartmentation. Includes (1) 56" wide compartment over the wheel well.	$4,968
3120-0095	Officer full height side body with upper and lower compartmentation. Includes 42" wide forward and 42" wide rearward lower compartments and (3) opening upper compartments. For use with ladder storage thru tank.	$11,120
3120-0096	Officer side body with full height 42" wide forward and 42" wide rearward compartmentation. Includes (1) 56" wide compartment over the wheel well. For use with ladder storage thru tank.	$10,684
3120-0097	Officer full height side body with upper and lower compartmentation. Includes 48" wide forward and 48" wide rearward lower compartments and (3) opening upper compartments. For use with ladder storage thru tank.	$11,867
3120-0098	Officer side body with full height 48" wide forward and 48" wide rearward compartmentation. Includes (1) 56" wide compartment over the wheel well. For use with ladder storage thru tank.	$11,430
3120-0099	Officer side body with full height 42" wide forward and 56" wide rearward extended compartmentation. Includes (1) 56" wide compartment over the wheel well.	$11,294
3120-0100	Officer side body with full height 42" wide forward and 56" wide rearward enhanced extended compartmentation. Includes (1) 56" wide compartment over the wheel well.	$11,574
3120-0101	Officer side body with full height 48" wide forward and 62" wide rearward extended compartmentation. Includes (1) 56" wide compartment over the wheel well.	$12,041
3120-0102	Officer side body with full height 48" wide forward and 62" wide rearward enhanced extended compartmentation. Includes (1) 56" wide compartment over the wheel well.	$12,320
3120-0104	Stainless steel officer 3/4 side body with full height 36" wide forward and 48" wide rearward compartmentation (interior). Includes (1) 60" wide compartment over the wheel well.	$12,616
3120-0105	Stainless steel officer 3/4 side body with full height 48" wide forward and 48" wide rearward compartmentation (interior). Includes (1) 60" wide compartment over the wheel well.	$13,253
3120-0106	Stainless steel officer 3/4 side body with full height 60" wide forward and 60" wide rearward compartmentation (interior). Includes (1) 60" wide compartment over the wheel well.	$14,527
3120-0107	Stainless steel officer 3/4 side body with full height 48" wide forward and 60" wide rearward compartmentation (interior). Includes (1) 60" wide compartment over the wheel well.	$13,888
3120-0108	Stainless steel officer side body with full height 36" wide forward and 48" wide (interior) rearward compartmentation. Includes (1) 45" wide (interior) compartment (forward) over the wheel well and (1) Zico Overhead Ladder Rack.	$19,239
3120-0109	Stainless steel officer side body with full height 48" wide forward and 48" wide (interior) rearward compartmentation. Includes (1) 45" wide (interior) compartment (forward) over the wheel well and (1) Zico Overhead Ladder Rack.	$20,943
3120-0110	Stainless steel officer side body with full height 60" wide forward and 60" wide (interior) rearward compartmentation. Includes (1) 45" wide (interior) compartment (forward) over the wheel well and (1) Zico Overhead Ladder Rack.	$21,885
3120-0111	Stainless steel officer side body with full height 48" wide forward and 60" wide (interior) rearward compartmentation. Includes (1) 45" wide (interior) compartment (forward) over the wheel well and (1) Zico Overhead Ladder Rack.	$21,571
3120-0112	Stainless steel officer side body with full height 36" wide forward and 48" wide rearward (interior) compartmentation. Includes (1) 60" wide compartment over the wheel well. For use with in the hosebed ladder storage.	$11,750
3120-0113	Stainless steel officer side body with full height 48" wide forward and 48" wide rearward (interior) compartmentation. Includes (1) 60" wide compartment over the wheel well. For use with in the hosebed ladder storage.	$13,455
3120-0114	Stainless steel officer side body with full height 48" wide forward and 60" wide rearward (interior) compartmentation. Includes (1) 60" wide compartment over the wheel well. For use with in the hosebed ladder storage.	$13,858
3120-0115	Stainless steel officer side body with full height 60" wide forward and 60" wide rearward (interior) compartmentation. Includes (1) 60" wide compartment over the wheel well. For use with in the hosebed ladder storage.	$13,455
3120-0116	Stainless steel officer side body with full height 36" wide forward and 48" wide (interior) rearward compartmentation. Includes (1) 60" wide compartment over the wheel well and one (1) ladder storage tunnel and access door at rear with push-button latch.	$15,266

3120-0117	Stainless steel officer side body with full height 48" wide forward and 48" wide (interior) rearward compartmentation. Includes (1) 60" wide compartment over the wheel well and one (1) ladder storage tunnel and access door at rear with push-button latch.	$16,967
3120-0118	Stainless steel officer side body with full height 48" wide forward and 60" wide (interior) rearward compartmentation. Includes (1) 60" wide compartment over the wheel well and one (1) ladder storage tunnel and access door at rear with push-button latch.	$17,817
3120-0119	Stainless steel officer side body with full height 60" wide forward and 60" wide (interior) rearward compartmentation. Includes (1) 60" wide compartment over the wheel well and one (1) ladder storage tunnel and access door at rear with push-button latch.	$17,908
3120-0121	Officer side body with full height 36" wide forward and 36" wide rearward compartmentation. Includes (1) 56" wide compartment over the wheel well.	$10,630
3120-0123	Officer half side body with 60" wide forward and 42" wide rearward compartmentation. Includes adjustable ladder tracks.	$6,118
3120-0124	Officer 3/4 side body with full height 60" wide forward and 42" wide rearward compartmentation. Includes (1) 56" wide compartment over the wheel well.	$7,646
3120-0125	Officer 3/4 side body with upper and lower compartmentation. Includes 60" wide forward and 42" wide rearward lower compartments and (3) opening upper compartments.	$8,111
3120-0126	Officer side body with full height 60" wide forward and 42" wide rearward compartmentation. Includes (1) 56" wide compartment over the wheel well. For use with ladder storage thru tank.	$12,230
3120-0127	Officer full height side body with upper and lower compartmentation. Includes 60" wide forward and 42" wide rearward lower compartments and (3) opening upper compartments. For use with ladder storage thru tank.	$12,697
3120-0128	Officer side body with full height 60" wide forward and 42" wide rearward compartmentation. Includes (1) 33" wide compartment (forward) over the wheel well and (1) Zico Overhead Ladder Rack.	$18,240
3120-0131	Stainless steel officer side body with full height 24" wide forward and 48" wide (interior) rearward compartmentation. Includes (1) 60" wide compartment over the wheel well and one (1) ladder storage tunnel and access door at rear with push-button latch.	$13,562
3120-0134	Officer side body with full height 30" wide forward and 36" wide rearward compartmentation. Includes (1) 56" wide compartment over the wheel well. For use with over the hosebed storage rack.	$9,332
3120-0135	Officer side body with full height 36" wide forward and 36" wide rearward compartmentation. Includes (1) 56" wide compartment over the wheel well. For use with over the hosebed storage rack.	$9,997
3120-0137	Officer 3/4 side body with full height 50" wide enhanced extended rearward compartmentation. Includes (1) 56" wide compartment over the wheel well.	$5,857
3120-0138	Officer 3/4 side body with upper and lower compartmentation. Includes 24" wide forward and 36" wide rearward lower compartments and (3) opening upper compartments.	$5,888
3120-0139	Officer 3/4 side body with full height 24" wide forward and 36" wide rearward compartmentation. Includes (1) 56" wide compartment over the wheel well.	$5,453
3120-0140	Officer 3/4 side body with upper and lower compartmentation. Includes 30" wide forward and 36" wide rearward lower compartments and (3) opening upper compartments.	$6,269
3120-0141	Officer 3/4 side body with upper and lower compartmentation. Includes 36" wide forward and 36" wide rearward lower compartments and (3) opening upper compartments.	$6,677
3120-0142	Officer 3/4 side body with upper and lower compartmentation. Includes 42" wide forward and 42" wide rearward lower compartments and (3) opening upper compartments.	$7,114
3120-0143	Officer 3/4 side body with upper and lower compartmentation. Includes 48" wide forward and 48" wide rearward lower compartments and (3) opening upper compartments.	$7,582
3120-0144	Officer 3/4 side body with full height 30" wide forward and 36" wide rearward compartmentation. Includes (1) 56" wide compartment over the wheel well.	$5,835
3120-0145	Officer 3/4 side body with full height 36" wide forward and 36" wide rearward compartmentation. Includes (1) 56" wide compartment over the wheel well.	$6,240
3120-0146	Officer 3/4 side body with full height 42" wide forward and 42" wide rearward compartmentation. Includes (1) 56" wide compartment over the wheel well.	$6,678
3120-0147	Officer 3/4 side body with full height 48" wide forward and 48" wide rearward compartmentation. Includes (1) 56" wide compartment over the wheel well.	$7,146
3120-0148	Officer 3/4 side body with 24" wide forward and 50" wide rearward extended compartmentation. Includes (1) 56" wide compartment over the wheel well.	$6,063
3120-0149	Officer 3/4 side body with 30" wide forward and 50" wide rearward extended compartmentation. Includes (1) 56" wide compartment over the wheel well.	$6,443
3120-0150	Officer 3/4 side body with 36" wide forward and 50" wide rearward extended compartmentation. Includes (1) 56" wide compartment over the wheel well.	$6,853
3120-0151	Officer 3/4 side body with 42" wide forward and 56" wide rearward extended compartmentation. Includes (1) 56" wide compartment over the wheel well.	$7,289
3120-0152	Officer 3/4 side body with 48" wide forward and 62" wide rearward extended compartmentation. Includes (1) 56" wide compartment over the wheel well.	$7,757
3120-0153	Officer 3/4 side body with 24" wide forward and 50" wide rearward enhanced extended compartmentation. Includes (1) 56" wide compartment over the wheel well.	$6,342
3120-0154	Officer 3/4 side body with 30" wide forward and 50" wide rearward enhanced extended compartmentation. Includes (1) 56" wide compartment over the wheel well.	$6,722
3120-0155	Officer 3/4 side body with 36" wide forward and 50" wide rearward enhanced extended compartmentation. Includes (1) 56" wide compartment over the wheel well.	$7,130
3120-0156	Officer 3/4 side body with 42" wide forward and 56" wide rearward enhanced extended compartmentation. Includes (1) 56" wide compartment over the wheel well.	$7,568
3120-0157	Officer 3/4 side body with 48" wide forward and 62" wide rearward enhanced extended compartmentation. Includes (1) 56" wide compartment over the wheel well.	$8,036
3120-0158	Officer side body with full height 24" wide forward and 36" wide rearward compartmentation. Includes (1) 33" wide compartment over the wheel well and (1) Zico Overhead Ladder Rack.	$15,086

3120-0159	Officer side body with full height 30" wide forward and 36" wide rearward compartmentation. Includes (1) 33" wide compartment over the wheel well and (1) Zico Overhead Ladder Rack.	$15,696
3120-0160	Officer side body with full height 36" wide forward and 36" wide rearward compartmentation. Includes (1) 33" wide compartment over the wheel well and (1) Zico Overhead Ladder Rack.	$16,347
3120-0161	Officer side body with full height 42" wide forward and 42" wide rearward compartmentation. Includes (1) 33" wide compartment over the wheel well and (1) Zico Overhead Ladder Rack.	$17,047
3120-0162	Officer side body with full height 48" wide forward and 48" wide rearward compartmentation. Includes (1) 33" wide compartment over the wheel well and (1) Zico Overhead Ladder Rack.	$17,793
3120-0163	Officer side body with full height 24" wide forward and 50" wide rearward extended compartmentation. Includes (1) 33" wide compartment over the wheel well and (1) Zico Overhead Ladder Rack.	$15,696
3120-0164	Officer side body with full height 30" wide forward and 50" wide rearward extended compartmentation. Includes (1) 33" wide compartment over the wheel well and (1) Zico Overhead Ladder Rack.	$16,306
3120-0165	Officer side body with full height 36" wide forward and 50" wide rearward extended compartmentation. Includes (1) 33" wide compartment over the wheel well and (1) Zico Overhead Ladder Rack.	$16,959
3120-0166	Officer side body with full height 42" wide forward and 56" wide rearward extended compartmentation. Includes (1) 33" wide compartment over the wheel well and (1) Zico Overhead Ladder Rack.	$17,658
3120-0167	Officer side body with full height 48" wide forward and 62" wide rearward extended compartmentation. Includes (1) 33" wide compartment over the wheel well and (1) Zico Overhead Ladder Rack.	$18,404
3120-0168	Officer side body with full height 24" wide forward and 50" wide rearward enhanced extended compartmentation. Includes (1) 33" wide compartment over the wheel well and (1) Zico Overhead Ladder Rack.	$15,977
3120-0169	Officer side body with full height 30" wide forward and 50" wide rearward enhanced extended compartmentation. Includes (1) 33" wide compartment over the wheel well and (1) Zico Overhead Ladder Rack.	$16,585
3120-0170	Officer side body with full height 36" wide forward and 50" wide rearward enhanced extended compartmentation. Includes (1) 33" wide compartment over the wheel well and (1) Zico Overhead Ladder Rack.	$17,236
3120-0171	Officer side body with full height 42" wide forward and 56" wide rearward enhanced extended compartmentation. Includes (1) 33" wide compartment over the wheel well and (1) Zico Overhead Ladder Rack.	$17,936
3120-0172	Officer side body with full height 48" wide forward and 62" wide rearward enhanced extended compartmentation. Includes (1) 33" wide compartment over the wheel well and (1) Zico Overhead Ladder Rack.	$18,683
3120-0173	Officer 3/4 side body with full height 24" wide forward and 36" wide rearward compartmentation. Includes (1) 56" wide compartment over the wheel well and 30 degree rear body angle for greater angle of departure.	$9,379
3120-0174	Officer 3/4 side body with full height 30" wide forward and 36" wide rearward compartmentation. Includes (1) 56" wide compartment over the wheel well and 30 degree rear body angle for greater angle of departure.	$9,676
3120-0175	Officer 3/4 side body with full height 36" wide forward and 36" wide rearward compartmentation. Includes (1) 56" wide compartment over the wheel well and 30 degree rear body angle for greater angle of departure.	$9,973
3120-0176	Officer side body with full height 24" wide forward and 36" wide rearward compartmentation. Includes (1) 33" wide compartment over the wheel well and (1) Zico Overhead Ladder Rack. Rear bottom corner of truck will be angled 30 degrees for a greater rear angle of departure.	$17,038
3120-0177	Officer side body with full height 30" wide forward and 36" wide rearward compartmentation. Includes (1) 33" wide compartment over the wheel well, (1) Zico Overhead Ladder Rack and 30 degree rear body angle for greater angle of departure.	$17,335
3120-0178	Officer side body with full height 36" wide forward and 36" wide rearward compartmentation. Includes (1) 33" wide compartment over the wheel well, (1) Zico Overhead Ladder Rack and 30 degree rear body angle for greater angle of departure.	$17,633
3120-0179	Stainless steel officer 3/4 side body with full height 36" wide forward and 48" wide rearward compartmentation (interior). Includes (1) 60" wide compartment over the wheel well.	$6,867
3120-0180	Stainless steel officer 3/4 side body with full height 48" wide forward and 48" wide rearward compartmentation (interior). Includes (1) 60" wide compartment over the wheel well.	$7,859
3120-0181	Stainless steel officer 3/4 side body with full height 48" wide forward and 60" wide rearward compartmentation (interior). Includes (1) 60" wide compartment over the wheel well.	$8,254
3120-0182	Stainless steel officer 3/4 side body with full height 60" wide forward and 60" wide rearward compartmentation (interior). Includes (1) 60" wide compartment over the wheel well.	$8,409
3120-0183	Stainless steel officer side body with full height 36" wide forward and 48" wide rearward compartmentation (interior). Includes (1) 45" wide compartment over the wheel well and (1) Zico Overhead Ladder Rack.	$17,984
3120-0184	Stainless steel officer side body with full height 48" wide forward and 48" wide rearward compartmentation (interior). Includes (1) 45" wide compartment over the wheel well and (1) Zico Overhead Ladder Rack.	$19,572
3120-0185	Stainless steel officer side body with full height 48" wide forward and 60" wide rearward compartmentation (interior). Includes (1) 45" wide compartment over the wheel well and (1) Zico Overhead Ladder Rack.	$22,351
3120-0186	Stainless steel officer side body with full height 60" wide forward and 60" wide rearward compartmentation (interior). Includes (1) 45" wide compartment over the wheel well and (1) Zico Overhead Ladder Rack.	$20,452

3120-0187	Stainless steel officer side body with full height 48" wide forward and 60" wide rearward compartmentation (interior). Includes (1) 60" wide compartment over the wheel well. For use with in the hosebed area ladder storage.	$13,202
3120-0188	Stainless steel officer side body with full height 60" wide forward and 60" wide rearward compartmentation (interior). Includes (1) 60" wide compartment over the wheel well. For use with in the hosebed area or thru the tank ladder storage.	$13,455
3120-0189	Officer side body with full height 36" wide forward and 36" wide rearward compartmentation. Includes (1) 33" wide compartment over the wheel well and (1) Zico Overhead Ladder Rack.	$17,492
3120-0190	Officer side body with full height 42" wide forward and 42" wide rearward compartmentation. Includes (1) 33" wide compartment over the wheel well and (1) Zico Overhead Ladder Rack.	$18,240
3120-0191	Officer side body with full height 48" wide forward and 48" wide rearward compartmentation. Includes (1) 33" wide compartment over the wheel well and (1) Zico Overhead Ladder Rack.	$19,041
3120-0192	Officer side body with full height 36" wide forward and 36" wide rearward compartmentation. Includes (1) 56" wide compartment over the wheel well and one (1) storage tunnel.	$13,516
3120-0193	Officer side body with full height 42" wide forward and 42" wide rearward compartmentation. Includes (1) 56" wide compartment over the wheel well and one (1) storage tunnel.	$14,263
3120-0194	Officer side body with full height 48" wide forward and 48" wide rearward compartmentation. Includes (1) 56" wide compartment over the wheel well and one (1) storage tunnel.	$15,063
3120-0195	Officer side body with full height 42" wide forward and 42" wide rearward compartmentation. Includes (1) 56" wide compartment over the wheel well.	$11,430
3120-0196	Officer side body with full height 48" wide forward and 48" wide rearward compartmentation. Includes (1) 56" wide compartment over the wheel well.	$12,230
3120-0197	Officer side body with full height 60" wide forward and 42" wide rearward compartmentation. Includes (1) 33" wide compartment over the wheel well and (1) Zico Overhead Ladder Rack.	$19,897
3120-0198	Officer side body with full height 60" wide forward and 42" wide rearward compartmentation. Includes (1) 56" wide compartment over the wheel well and one (1) storage tunnel.	$15,921
3120-0199	Officer side body with full height 60" wide forward and 42" wide rearward compartmentation. Includes (1) 56" wide compartment over the wheel well.	$13,087
3120-0200	Officer 3/4 side body with full height 36" wide rearward compartmentation. Includes (1) 56" wide compartment over the wheel well and 30 degree rear body angle for greater angle of departure.	$8,462
3120-0201	Officer 3/4 side body with full height 36" wide rearward compartmentation. Includes (1) 56" wide compartment over the wheel well.	$4,968
3120-0202	Officer full height side body with upper and lower compartmentation. Includes 42" wide forward and 42" wide rearward lower compartments and (3) opening upper compartments. For use with ladder storage thru tank.	$11,120
3120-0203	Officer side body with full height 42" wide forward and 42" wide rearward compartmentation. Includes (1) 56" wide compartment over the wheel well.	$10,684
3120-0204	Officer full height side body with upper and lower compartmentation. Includes 48" wide forward and 48" wide rearward lower compartments and (3) opening upper compartments. For use with ladder storage thru tank.	$11,867
3120-0205	Officer side body with full height 48" wide forward and 48" wide rearward compartmentation. Includes (1) 56" wide compartment over the wheel well.	$11,430
3120-0206	Officer side body with full height 42" wide forward and 56" wide rearward extended compartmentation. Includes (1) 56" wide compartment over the wheel well.	$11,294
3120-0207	Officer side body with full height 42" wide forward and 56" wide rearward enhanced extended compartmentation. Includes (1) 56" wide compartment over the wheel well.	$11,574
3120-0208	Officer side body with full height 48" wide forward and 62" wide rearward extended compartmentation. Includes (1) 56" wide compartment over the wheel well.	$12,041
3120-0209	Officer side body with full height 48" wide forward and 62" wide rearward enhanced extended compartmentation. Includes (1) 56" wide compartment over the wheel well.	$12,320
3120-0210	Stainless steel officer 3/4 side body with full height 36" wide forward and 48" wide rearward compartmentation (interior). Includes (1) 60" wide compartment over the wheel well.	$12,616
3120-0211	Stainless steel officer 3/4 side body with full height 48" wide forward and 48" wide rearward compartmentation (interior). Includes (1) 60" wide compartment over the wheel well.	$13,253
3120-0212	Stainless steel officer 3/4 side body with full height 60" wide forward and 60" wide rearward compartmentation (interior). Includes (1) 60" wide compartment over the wheel well.	$14,527
3120-0213	Stainless steel officer 3/4 side body with full height 48" wide forward and 60" wide rearward compartmentation (interior). Includes (1) 60" wide compartment over the wheel well.	$13,888
3120-0214	Stainless steel officer side body with full height 36" wide forward and 48" wide (interior) rearward compartmentation. Includes (1) 45" wide (interior) compartment over the wheel well and (1) Zico Overhead Ladder Rack.	$19,239
3120-0215	Stainless steel officer side body with full height 48" wide forward and 48" wide (interior) rearward compartmentation. Includes (1) 45" wide (interior) compartment over the wheel well and (1) Zico Overhead Ladder Rack.	$20,943
3120-0216	Stainless steel officer side body with full height 60" wide forward and 60" wide (interior) rearward compartmentation. Includes (1) 45" wide (interior) compartment over the wheel well and (1) Zico Overhead Ladder Rack.	$21,885
3120-0217	Stainless steel officer side body with full height 48" wide forward and 60" wide (interior) rearward compartmentation. Includes (1) 45" wide (interior) compartment over the wheel well and (1) Zico Overhead Ladder Rack.	$21,571
3120-0218	Stainless steel officer side body with full height 36" wide forward and 48" wide rearward (interior) compartmentation. Includes (1) 60" wide compartment over the wheel well. For use with in the hosebed ladder storage.	$11,750
3120-0219	Stainless steel officer side body with full height 48" wide forward and 48" wide rearward (interior) compartmentation. Includes (1) 60" wide compartment over the wheel well. For use with in the hosebed ladder storage.	$13,455

3120-0220	Stainless steel officer side body with full height 48" wide forward and 60" wide rearward (interior) compartmentation. Includes (1) 60" wide compartment over the wheel well. For use with in the hosebed ladder storage.	$13,858
3120-0221	Stainless steel officer side body with full height 60" wide forward and 60" wide rearward (interior) compartmentation. Includes (1) 60" wide compartment over the wheel well. For use with in the hosebed ladder storage.	$13,455
3120-0222	Stainless steel officer side body with full height 36" wide forward and 48" wide (interior) rearward compartmentation. Includes (1) 60" wide compartment over the wheel well and one (1) ladder storage tunnel and access door at rear with push-button latch.	$15,266
3120-0223	Stainless steel officer side body with full height 48" wide forward and 48" wide (interior) rearward compartmentation. Includes (1) 60" wide compartment over the wheel well and one (1) ladder storage tunnel and access door at rear with push-button latch.	$16,967
3120-0224	Stainless Steel Officer side body with full height 48" wide forward and 60" wide (interior) rearward compartmentation. Includes (1) 60" wide compartment over the wheel well and one (1) ladder storage tunnel and access door at rear with push-button latch.	$17,817
3120-0225	Stainless steel officer side body with full height 60" wide forward and 60" wide (interior) rearward compartmentation. Includes (1) 60" wide compartment over the wheel well and one (1) ladder storage tunnel and access door at rear with push-button latch.	$17,908
3120-0226	Officer side body with full height 36" wide forward and 36" wide rearward compartmentation. Includes (1) 56" wide compartment over the wheel well.	$10,630
3120-0227	Officer 3/4 side body with full height 60" wide forward and 42" wide rearward compartmentation. Includes (1) 56" wide compartment over the wheel well.	$7,646
3120-0228	Officer 3/4 side body with upper and lower compartmentation. Includes 60" wide forward and 42" wide rearward lower compartments and (3) opening upper compartments.	$8,111
3120-0229	Officer side body with full height 60" wide forward and 42" wide rearward compartmentation. Includes (1) 56" wide compartment over the wheel well.	$12,230
3120-0230	Officer full height side body with upper and lower compartmentation. Includes 60" wide forward and 42" wide rearward lower compartments and (3) opening upper compartments. For use with ladder storage thru tank.	$12,697
3120-0231	Officer side body with full height 60" wide forward and 42" wide rearward compartmentation. Includes (1) 33" wide compartment over the wheel well and (1) Zico Overhead Ladder Rack.	$18,240
3120-0232	Officer side body with full height 36" wide forward and 36" wide rearward compartmentation. Includes (1) 56" wide compartment over the wheel well.	$9,997
3120-0234	Officer side body with full height 48" wide forward and 48" wide rearward compartmentation. Includes (1) 56" wide compartment over the wheel well.	$12,230
3120-0236	Overhead Ladder Rack to be offset forward includes shifting compartment (rearward) over the wheel well.	$591
3120-0238	Officer full height side body with upper and lower compartmentation. Includes 36" wide forward and 36" wide rearward lower compartments and (2) opening upper compartments. Includes (1) Zico Overhead Ladder Rack mounted centered between upper compartments.	$19,837
3120-0239	Officer side compartment top storage box (PR). Locate one forward and one rearward of the ladder rack. Boxes to be smooth plate and painted job color with diamond plate tops. The rearward box to have a rear vertically hinged door with push-button latch. Boxes to have (1) diamond plate lid each with push button latch.	$1,853
3120-0240	Officer 3/4 side body with upper and lower compartmentation. Includes 24" wide forward and 36" wide rearward lower compartments and (2) opening upper compartments.	$5,888
3120-0241	Compartment R1 to have rescue style interior compartment height.	$1,481
3120-0242	Officer side tunnel to hold: (1) 1500 gallon Fol-da-tank.	$621
3120-0244	Officer side body with full height 30" wide forward and 50" wide rearward extended compartmentation. Includes (1) 56" wide compartment over the wheel well and (1) 2-Arm Ladder Rack. The ladder rack is to be sanded DA finish and includes amber lights on each end to visually indicate when the rack is in motion.	$29,037
3120-0245	Officer side body with full height 24" wide forward and 36" wide rearward compartmentation. Includes (1) 56" wide compartment over the wheel well.	$8,723
3120-0246	Officer side body with full height 30" wide forward and 36" wide rearward compartmentation. Includes (1) 56" wide compartment over the wheel well.	$9,332
3120-0247	Officer side body with full height 24" wide forward and 50" wide rearward extended compartmentation. Includes (1) 56" wide compartment over the wheel well.	$9,332
3120-0248	Officer side body with full height 30" wide forward and 50" wide rearward extended compartmentation. Includes (1) 56" wide compartment over the wheel well.	$9,945
3120-0249	Officer side body with full height 36" wide forward and 50" wide rearward extended compartmentation. Includes (1) 56" wide compartment over the wheel well.	$10,594
3120-0250	Officer side body with full height 24" wide forward and 50" wide rearward enhanced extended compartmentation. Includes (1) 56" wide compartment over the wheel well.	$9,613
3120-0251	Officer side body with full height 30" wide forward and 50" wide rearward enhanced extended compartmentation. Includes (1) 56" wide compartment over the wheel well.	$10,222
3120-0252	Officer side body with full height 36" wide forward and 50" wide rearward enhanced extended compartmentation. Includes (1) 56" wide compartment over the wheel well.	$10,873
3120-0254	Officer side body with full height 52" wide forward and 52" wide rearward compartmentation. Includes (1) 56" wide compartment over the wheel well.	$12,230
3120-0255	Officer side body with full height 36" wide forward and 50" wide rearward compartmentation. Includes (1) 56" wide compartment over the wheel well.	$10,873
3120-0256	Officer side body with full height 30" wide forward and 50" wide rearward compartmentation. Includes (1) 56" wide compartment over the wheel well.	$10,222
3120-0257	Officer side body with full height 24" wide forward and 50" wide rearward compartmentation. Includes (1) 56" wide compartment over the wheel well.	$9,613
3120-0258	Officer 3/4 side body with full height 24" wide forward and 50" wide rearward compartmentation. Includes (1) 56" wide compartment over the wheel well.	$6,342

3120-0259	Officer 3/4 side body with full height 30" wide forward and 50" wide rearward compartmentation. Includes (1) 56" wide compartment over the wheel well.	$6,722
3120-0260	Officer 3/4 side body with full height 36" wide forward and 50" wide rearward enhanced extended compartmentation. Includes (1) 56" wide compartment over the wheel well.	$7,130
3120-0261	Officer half side body with 24" wide forward and 50" wide rearward compartmentation. Includes adjustable ladder tracks.	$5,254
3120-0262	Officer half side body with 30" wide forward and 50" wide rearward compartmentation. Includes adjustable ladder tracks.	$5,557
3120-0263	Officer half side body with 36" wide forward and 50" wide rearward enhanced extended compartmentation. Includes adjustable ladder tracks.	$5,883
3120-0264	Officer side body with full height 24" wide forward and 50" wide rearward compartmentation. Includes (1) 33" wide compartment over the wheel well and (1) Zico Overhead Ladder Rack.	$15,977
3120-0265	Officer side body with full height 30" wide forward and 50" wide rearward compartmentation. Includes (1) 33" wide compartment over the wheel well and (1) Zico Overhead Ladder Rack.	$16,585
3120-0266	Officer side body with full height 36" wide forward and 50" wide rearward compartmentation. Includes (1) 33" wide compartment over the wheel well and (1) Zico Overhead Ladder Rack.	$17,236
3120-0268	Officer side body with full height 42" wide forward and 56" wide rearward compartmentation. Includes (1) 56" wide compartment over the wheel well.	$11,526
3120-0269	Officer side body with full height 36" wide forward and 42" wide rearward compartmentation. Includes (1) 56" wide compartment over the wheel well and one (1)ladder storage tunnel and access door at rear.	$14,263
3120-0270	Officer side body with full height 42" wide forward and 56" wide rearward compartmentation. Includes (1) 33" wide compartment over the wheel well and (1) Zico Overhead Ladder Rack.	$17,658
3120-0271	Officer 3/4 side body with full height 42" wide forward and 56" wide rearward enhanced extended compartmentation. Includes (1) 56" wide compartment over the wheel well.	$7,568
3120-0272	Officer half side body with 42" wide forward and 56" wide rearward enhanced extended compartmentation. Includes adjustable ladder tracks.	$6,233
3120-0273	Officer side body with full height 36" wide forward and 50" wide rearward enhanced extended compartmentation. Includes (1) 20" wide compartment over the wheel well and (1) E-One center mounted Overhead Ladder Rack.	$17,236
3120-0274	Officer side body with full height 36" wide forward and 50" wide rearward enhanced extended compartmentation. Includes (1) 56" wide compartment over the wheel well.	$11,560
3120-0275	Officer side body with full height 42" wide forward and 56" wide rearward enhanced extended compartmentation. Includes (1) 56" wide compartment over the wheel well.	$12,307
3120-0276	Officer side body with full height 48" wide forward and 62" wide rearward enhanced extended compartmentation. Includes (1) 56" wide compartment over the wheel well.	$13,108
3120-0277	Officer side body with full height 60" wide forward and 56" wide rearward enhanced extended compartmentation. Includes (1) 56" wide compartment over the wheel well.	$13,965
3120-0278	Officer side body with full height 36" wide forward and 50" wide rearward enhanced extended compartmentation. Includes (1) 33" wide compartment over the wheel well and (1) Zico Overhead Ladder Rack.	$18,368
3120-0279	Officer side body with full height 42" wide forward and 56" wide rearward enhanced extended compartmentation. Includes (1) 33" wide compartment over the wheel well and (1) Zico Overhead Ladder Rack.	$19,116
3120-0280	Officer side body with full height 48" wide forward and 62" wide rearward enhanced extended compartmentation. Includes (1) 33" wide compartment over the wheel well and (1) Zico Overhead Ladder Rack.	$19,915
3120-0281	Officer side body with full height 60" wide forward and 56" wide rearward enhanced extended compartmentation. Includes (1) 33" wide compartment over the wheel well and (1) Zico Overhead Ladder Rack.	$20,772
3120-0282	Officer side body with full height 36" wide forward and 50" wide rearward enhanced extended compartmentation. Includes (1) 56" wide compartment over the wheel well and one (1) storage tunnel.	$14,393
3120-0283	Officer side body with full height 42" wide forward and 56" wide rearward enhanced extended compartmentation. Includes (1) 56" wide compartment over the wheel well and one (1) storage tunnel.	$15,141
3120-0284	Officer side body with full height 48" wide forward and 62" wide rearward enhanced extended compartmentation. Includes (1) 56" wide compartment over the wheel well and one (1) storage tunnel.	$15,941
3120-0285	Officer side body with full height 60" wide forward and 56" wide rearward enhanced extended compartmentation. Includes (1) 56" wide compartment over the wheel well and one (1) storage tunnel.	$16,795
3120-0286	Officer 3/4 side body with full height 30" wide forward and 36" wide rearward compartmentation. Includes (1) 56" wide compartment over the wheel well.	$5,606
3120-0287	Officer side body with upper and lower compartmentation. Includes 24" wide forward and 36" wide rearward lower compartments and (2) opening upper compartments. Includes (1) Zico Overhead Ladder Rack centered mounted between upper compartments.	$15,522
3120-0288	Officer full height side body with upper and lower compartmentation. Includes 42" wide forward and 42" wide rearward lower compartments and (2) opening upper compartments. Includes (1) Zico Overhead Ladder Rack mounted centered between upper compartments.	$17,483
3120-0290	Officer side body with full height 30" wide forward and 50" wide rearward enhanced extended compartmentation. Includes (1) 56" wide compartment over the wheel well and one (1) storage tunnel.	$13,699
3120-0291	Officer side body with full height 50" wide forward and 50" wide rearward enhanced extended compartmentation. Includes (1) 33" wide compartment over the wheel well and (1) Zico Overhead Ladder Rack.	$19,116

3120-0292	Officer side body with full height 56" wide forward and 56" wide rearward enhanced extended compartmentation. Includes (1) 33" wide compartment over the wheel well and (1) Zico Overhead Ladder Rack.	$19,914
3120-0293	Officer side body with full height 62" wide forward and 62" wide rearward enhanced extended compartmentation. Includes (1) 33" wide compartment over the wheel well and (1) Zico Overhead Ladder Rack.	$20,713
3120-0294	Officer side body with full height 50" wide forward and 50" wide rearward enhanced extended compartmentation. Includes (1) 56" wide compartment over the wheel well.	$12,307
3120-0295	Officer side body with full height 56" wide forward and 56" wide rearward enhanced extended compartmentation. Includes (1) 56" wide compartment over the wheel well.	$13,108
3120-0296	Officer side body with full height 62" wide forward and 62" wide rearward enhanced extended compartmentation. Includes (1) 56" wide compartment over the wheel well.	$13,905
3120-0297	Officer side body with full height 50" wide forward and 50" wide rearward enhanced extended compartmentation. Includes (1) 56" wide compartment over the wheel well and one (1) ladder storage tunnel and access door at rear.	$15,141
3120-0298	Officer side body with full height 56" wide forward and 56" wide rearward enhanced extended compartmentation. Includes (1) 56" wide compartment over the wheel well and one (1) ladder storage tunnel and access door at rear.	$15,940
3120-0299	Officer side body with full height 62" wide forward and 62" wide rearward enhanced extended compartmentation. Includes (1) 56" wide compartment over the wheel well and one (1) ladder storage tunnel and access door at rear.	$16,737
3120-0300	Officer side body with full height 42" wide forward and 56" wide rearward enhanced extended compartmentation. Includes (1) 56" wide compartment over the wheel well and one (1) storage tunnel and access door at rear.	$15,141
3120-0301	Officer side tunnel to hold: [#LOC].	$621
3120-0302	Officer half side body with 42" wide forward and 42" wide rearward compartmentation.	$5,343
3120-0303	Officer side body with full height 36" wide forward and 36" wide rearward compartmentation. Includes (1) 56" wide compartment over the wheel well and 30 degree rear body angle for greater angle of departure.	$10,321
3120-0304	Officer side body with full height 62" wide forward and 62" wide rearward enhanced extended compartmentation. Includes (1) 56" wide compartment over the wheel well.	$13,072
3120-0305	Stainless steel officer side body with full height 48" wide forward and 48" wide (interior) rearward compartmentation. Includes (1) 60" wide compartment over the wheel well and one (1) ladder storage tunnel and access door at rear with push-button latch. Upper area of ladder storage to have stop at 8' and be used for misc. storage.	$17,268
3120-0306	Officer side body with 62" wide full height forward enhanced extended compartment, 36" wide half height second forward compartment and 50" wide half height rearward compartmentation. Includes adjustable ladder tracks.	$18,015
3120-0307	Officer side body with full height 24" wide forward and 56" wide rearward extended compartmentation. Includes (1) 33" wide compartment over the wheel well and (1) Zico Overhead Ladder Rack.	$16,653
3120-0308	Officer side body with full height 24" wide forward and 50" wide rearward enhanced extended compartmentation. Includes (1) 56" wide compartment over the wheel well and one (1) ladder storage tunnel and access door at rear.	$15,755
3120-0309	Officer side body with upper and lower compartmentation. Includes 36" wide forward and 50" wide rearward extended lower compartmentation and (2) opening upper compartments with (1) Zico Overhead Ladder Rack centered between the compartments.	$20,492
3120-0310	Officer side body with full height 36" wide forward and 36" wide rearward compartmentation. Includes (1) 33" wide compartment over the wheel well, one (1) storage tunnel and (1) Zico Overhead Ladder Rack.	$20,325
3120-0311	Officer side body with full height 42" wide forward and 42" wide rearward compartmentation. Includes (1) 33" wide compartment over the wheel well, one (1) storage tunnel and (1) Zico Overhead Ladder Rack.	$21,072
3120-0312	Officer side body with full height 48" wide forward and 48" wide rearward compartmentation. Includes (1) 33" wide compartment over the wheel well, one (1) storage tunnel and (1) Zico Overhead Ladder Rack.	$21,872
3120-0313	Officer side body with full height 60" wide forward and 42" wide rearward compartmentation. Includes (1) 33" wide compartment over the wheel well, one (1) storage tunnel and (1) Zico Overhead Ladder Rack.	$22,729
3120-0314	Officer side body with full height 36" wide forward and 50" wide rearward enhanced extended compartmentation. Includes (1) 33" wide compartment over the wheel well, one (1) storage tunnel and (1) Zico Overhead Ladder Rack.	$21,199
3120-0315	Officer side body with full height 42" wide forward and 56" wide rearward enhanced extended compartmentation. Includes (1) 33" wide compartment over the wheel well, one (1) storage tunnel and (1) Zico Overhead Ladder Rack.	$21,949
3120-0316	Officer side body with full height 48" wide forward and 62" wide rearward enhanced extended compartmentation. Includes (1) 33" wide compartment over the wheel well, (1) Zico Overhead Ladder Rack and one (1) storage tunnel.	$22,748
3120-0317	Officer side body with full height 60" wide forward and 56" wide rearward enhanced extended compartmentation. Includes (1) 33" wide compartment over the wheel well, one (1) storage tunnel and (1) Zico Overhead Ladder Rack.	$23,605
3120-0319	Officer half side body with 20" wide forward and 50" wide rearward extended compartmentation. Includes adjustable ladder tracks.	$4,871
3120-0321	Stainless steel officer side body with full height 30" wide forward and 58" wide rearward enhanced extended compartmentation. Includes (1) 54" wide compartment over the wheel well.	$10,222
3120-0322	Stainless steel officer side body with full height 40" wide forward and 58" wide rearward enhanced extended compartmentation. Includes (1) 54" wide compartment over the wheel well.	$11,574

3120-0323	Stainless steel officer side body with full height 48" wide forward and 58" wide rearward enhanced extended compartmentation. Includes (1) 54" wide compartment over the wheel well.	$12,320
3120-0324	Stainless steel officer side body with full height 30" wide forward and 40" wide rearward compartmentation. Includes (1) 54" wide compartment over the wheel well.	$9,332
3120-0325	Stainless steel officer side body with full height 40" wide forward and 40" wide rearward compartmentation. Includes (1) 54" wide compartment over the wheel well.	$10,684
3120-0326	Stainless steel officer side body with full height 48" wide forward and 40" wide rearward compartmentation. Includes (1) 54" wide compartment over the wheel well.	$11,430
3120-0327	Stainless steel officer half side body with 30" wide forward and 40" wide rearward compartmentation. Includes adjustable ladder tracks.	$4,668
3120-0328	Stainless steel officer half side body with 40" wide forward and 40" wide rearward compartmentation. Includes adjustable ladder tracks.	$5,343
3120-0329	Stainless steel officer half side body with 48" wide forward and 40" wide rearward compartmentation. Includes adjustable ladder tracks.	$5,718
3120-0330	Stainless steel officer 3/4 side body with full height 30" wide forward and 40" wide rearward compartmentation. Includes (1) 54" wide compartment over the wheel well.	$5,835
3120-0331	Stainless steel officer 3/4 side body with full height 40" wide forward and 40" wide rearward compartmentation. Includes (1) 54" wide compartment over the wheel well.	$6,678
3120-0332	Stainless steel officer 3/4 side body with full height 48" wide forward and 40" wide rearward compartmentation. Includes (1) 54" wide compartment over the wheel well.	$7,146
3120-0333	Stainless steel officer side body with full height 30" wide forward and 40" wide rearward compartmentation. Includes (1) 38" wide compartment over the wheel well and (1) Zico Overhead Ladder Rack.	$15,696
3120-0334	Stainless steel officer side body with full height 40" wide forward and 40" wide rearward compartmentation. Includes (1) 38" wide compartment over the wheel well and (1) Zico Overhead Ladder Rack.	$17,047
3120-0335	Stainless steel officer side body with full height 48" wide forward and 40" wide rearward compartmentation. Includes (1) 38" wide compartment over the wheel well and (1) Zico overhead ladder rack.	$17,793
3120-0336	Stainless steel officer side body with full height 30" wide forward and 58" wide rearward enhanced extended compartmentation. Includes (1) 38" wide compartment over the wheel well and (1) Zico Overhead Ladder Rack.	$16,585
3120-0337	Stainless steel officer side body with full height 40" wide forward and 58" wide rearward enhanced extended compartmentation. Includes (1) 38" wide compartment over the wheel well and (1) Zico Overhead Ladder Rack.	$17,936
3120-0338	Stainless steel officer side body with full height 48" wide forward and 58" wide rearward enhanced extended compartmentation. Includes (1) 38" wide compartment over the wheel well and (1) Zico Overhead Ladder Rack.	$18,683
3120-0339	Officer half side stainless steel body with 30" wide forward and 58" wide rearward enhanced extended compartmentation. Includes adjustable ladder tracks.	$5,557
3120-0340	Officer half side stainless steel body with 40" wide forward and 58" wide rearward enhanced extended compartmentation. Includes adjustable ladder tracks.	$6,233
3120-0341	Officer half side stainless steel body with 48" wide forward and 58" wide rearward enhanced extended compartmentation. Includes adjustable ladder tracks.	$6,607
3120-0342	Officer 3/4 side stainless steel body with 30" wide forward and 58" wide rearward enhanced extended compartmentation. Includes (1) 54" wide compartment over the wheel well.	$6,722
3120-0343	Officer 3/4 side stainless steel body with 40" wide forward and 58" wide rearward enhanced extended compartmentation. Includes (1) 54" wide compartment over the wheel well.	$7,568
3120-0344	Officer 3/4 side stainless steel body with 48" wide forward and 58" wide rearward enhanced extended compartmentation. Includes (1) 54" wide compartment over the wheel well.	$8,036
3120-0346	Officer half side body with (2) forward compartments (48" and 30" wide) and one rearward area for locating of side tank dump.	$4,865
3120-0347	Officer half side body with (2) forward compartments (48" and 30" wide) and (1) rearward compartment (24").	$5,718
3120-0348	Officer 3/4 side body with (2) lower forward compartments (48" and 30" wide), (3) upper compartments (54") and one lower rearward area for locating of side tank dump.	$6,728
3120-0349	Officer 3/4 side body with (2) lower forward compartments (48" and 30" wide), (3) upper compartments (54") and (1) lower rearward compartment (24").	$7,582
3120-0350	Officer full height side body with (2) lower forward compartments (48" and 30" wide), (3) upper compartments (54") and one lower rearward area for locating of side tank dump.	$8,592
3120-0351	Officer full height side body with (2) lower forward compartments (48" and 30" wide), (3) upper compartments (54") and (1) lower rearward compartment (24").	$9,447
3120-0352	Officer full height side body with (2) full height, rescue style, forward compartments (48" and 30" wide), (1) upper compartment (61" and offset rearward of the rack opening) and one lower rearward area for locating of side tank dump.	$8,592
3120-0353	Officer full height side body with (2) full height, rescue style, forward compartments (48" and 30" wide), (1) upper compartment (61" and offset rearward of the rack opening) and (1) lower rearward compartment (24").	$9,447
3120-0356	Officer full height side body with (2) lower forward compartments (48" and 30" wide), (3) upper compartments (54") with rear compartment face access door for portable tank storage and one lower rearward area for locating of side tank dump.	$9,950
3120-0357	Officer full height side body with (2) lower forward compartments (48" and 30" wide), (3) upper compartments (54") with rear compartment face access door for portable tank storage and (1) lower rearward compartment (24").	$10,803
3120-0358	Officer half side body with 60" wide forward and 42" wide rearward compartmentation.	$6,118
3120-0359	Officer side body with full height 24" wide forward and 50" wide rearward enhanced extended compartmentation. Includes (1) 56" wide compartment over the wheel well and one (1) storage tunnel.	$13,004

3120-0362	Officer full height side body with (2) lower forward compartments (48" and 30" wide), (1) upper forward compartment (54") with rear compartment face access door (wired to door ajar) for enclosed ladder storage and (1) lower rearward compartment (24").	$12,159
3120-0363	Officer full height side body with (2) full height, rescue style, forward compartments (48" and 30" wide), (2) upper compartments (40" wide) and one lower rearward area for locating of side tank dump.	$8,592
3120-0364	Officer full height side body with (2) full height, rescue style, forward compartments (48" and 30" wide), (2) upper compartment (40" wide) and (1) lower rearward compartment (24").	$9,447
3120-0365	(1) officer side roof top compartments with extra width to inboard side. Includes hinged raised compartment lid with turn latches, grab handle(s) and gas shock hold open and drain line(s) ran to below body. The lid to have (1) bracket mounted LED light and to be wired to door ajar indicator in cab.	$5,306
3120-0366	Stainless steel officer side body with full height 48" wide forward and 48" wide rearward compartmentation with reduced upper depth. Includes (1) 54" wide compartment over the wheel well and (1) storage tunnel.	$15,063
3120-0367	Stainless steel officer side body with full height 54" wide forward and 54" wide rearward compartmentation with reduced upper depth. Includes (1) 54" wide compartment over the wheel well and (1) storage tunnel.	$16,269
3120-0368	Stainless steel officer side body with full height 60" wide forward and 60" wide rearward compartmentation with reduced upper depth. Includes (1) 54" wide compartment over the wheel well and (1) storage tunnel.	$17,475
3120-0369	Stainless steel officer side body with full height 48" wide forward and 48" wide rearward compartmentation. Includes 54" wide compartment over the wheel well and a dual arm hydraulic overhead ladder rack.	$12,230
3120-0370	Stainless steel officer side body with full height 54" wide forward and 54" wide rearward compartmentation. Includes 54" wide compartment over the wheel well and a dual arm hydraulic overhead ladder rack.	$13,208
3120-0371	Stainless steel officer side body with full height 60" wide forward and 60" wide rearward compartmentation. Includes 54" wide compartment over the wheel well and a dual arm hydraulic overhead ladder rack.	$14,188
3120-0377	Officer half side tandem body with 30" wide forward and 30" wide rearward compartmentation.	$7,300
3120-0378	Officer half side tandem body with 42" wide forward and 42" wide rearward compartmentation.	$7,974
3120-0379	Officer half side tandem body with 60" wide forward and 54" wide rearward compartmentation.	$8,750
3120-0380	Officer 3/4 side tandem body with full height 30" wide forward and 30" wide rearward compartmentation. Includes (2) 51.5" wide compartments over the wheel well.	$8,453
3120-0381	Officer 3/4 side tandem body with full height 42" wide forward and 42" wide rearward compartmentation. Includes (2) 51.5" wide compartments over the wheel well.	$9,295
3120-0382	Officer 3/4 side tandem body with full height 60" wide forward and 54" wide rearward compartmentation. Includes (2) 51.5" wide compartments over the wheel well.	$10,262
3120-0383	Officer side tandem body with upper and lower compartmentation. Includes 30" wide forward and 30" wide rearward compartments and (4) opening upper compartments.	$12,384
3120-0384	Officer side tandem body with upper and lower compartmentation. Includes 42" wide forward and 42" wide rearward compartments and (4) opening upper compartments.	$13,737
3120-0385	Officer side tandem body with upper and lower compartmentation. Includes 60" wide forward and 54" wide rearward compartments and (4) opening upper compartments.	$15,313
3120-0386	Officer side tandem body with upper and lower compartmentation. Includes 30" wide forward and 30" wide rearward compartments and (4) opening upper compartments. Includes overhead rack opening centered between upper compartments.	$12,878
3120-0387	Officer side tandem body with upper and lower compartmentation. Includes 42" wide forward and 42" wide rearward compartments and (4) opening upper compartments. Includes overhead rack opening centered between upper compartments.	$14,285
3120-0388	Officer side tandem body with upper and lower compartmentation. Includes 60" wide forward and 54" wide rearward compartments and (4) opening upper compartments. Includes overhead rack opening centered between upper compartments.	$15,925
3120-0389	Officer side tandem body with full height 30" wide forward and 30" wide rearward compartmentation. Includes (2) 51.5" wide compartments over the wheel well.	$11,950
3120-0390	Officer side tandem body with full height 42" wide forward and 42" wide rearward compartmentation. Includes (2) 51.5" wide compartments over the wheel well.	$13,301
3120-0391	Officer side tandem body with full height 60" wide forward and 54" wide rearward compartmentation. Includes (2) 51.5" wide compartments over the wheel well.	$14,846
3120-0392	Officer side tandem body with full height 30" wide forward and 30" wide rearward compartmentation. Includes (2) 42" wide compartments over the wheel well and overhead rack opening centered between upper compartments.	$12,426
3120-0393	Officer side tandem body with full height 42" wide forward and 42" wide rearward compartmentation. Includes (2) 42" wide compartments over the wheel well and overhead rack opening centered between upper compartments.-	$13,832
3120-0394	Officer side tandem body with full height 60" wide forward and 54" wide rearward compartmentation. Includes (2) 42" wide compartments over the wheel well and overhead rack opening centered between upper compartments.	$15,440
3120-0401	Officer side body with full height 42" wide forward and 50" wide rearward compartmentation. Includes (1) 33" wide compartment over the wheel well and (1) Zico Overhead Ladder Rack.	$17,448
3120-0402	Officer half side tandem body with with 42" wide forward and one rearward area for locating of side tank dump rearward of the wheel well.	$8,254
3120-0403	Officer side body with full height 60" wide forward and 56" wide rearward compartmentation. Includes (1) 56" wide compartment over the wheel well and one (1) storage tunnel located behind the upper (3) compartment back walls.	$15,921

3120-0404	Officer half side body with 36" wide forward and 31" wide rearward compartmentation. Includes adjustable ladder tracks mounted to outside of hosebed 3x3 and to run full height for max adjustments..	$4,997
3120-0405	Officer side body with full height 46" wide forward and 56" wide rearward enhanced extended compartmentation. Includes (1) 56" wide compartment over the wheel well.	$13,108
3120-0407	Officer side body with full height 42" wide forward and 56" wide rearward enhanced extended compartmentation. Includes (1) 56" wide compartment over the wheel well. Rescue Pumper style compartments for use with low hosebed.	$13,981
3120-0411	Officer side body with full height 42" wide forward and 56" wide rearward enhanced extended compartmentation. Includes (1) 56" wide compartment over the wheel well.	$12,865
3120-0412	2-Arm Ladder Rack on Officer Side. The ladder rack includes amber lights on each end to visually indicate when the rack is in motion. Restricts the top folding step (if optioned) from closing completely. Includes mounting bracket (matching rear compartment face or compartment wrap finish) for components mounted on rear compartment face including the stop/tail/turn lights.	$15,432
3120-0413	Officer side body with full height 60" wide forward and 56" wide rearward compartmentation. Includes (1) 33" wide compartment over the wheel well and (1) Zico Overhead Ladder Rack.	$19,897
3120-0414	Officer half side body with (2) forward compartments (39" and 39" wide) and (1) rearward compartment (24").	$6,835
3120-0415	Officer full height side body with upper and lower compartmentation. Includes 48" wide forward and 62" wide enhanced extended rearward lower compartments and (3) opening upper compartments and (1) Zico Overhead Ladder Rack. Upper compartments to be (1) 56" wide forward, Overhead ladder rack, (2) 45" wide compartments rearward of rack.	$19,737
3120-0416	Officer full height side body with upper and lower compartmentation. Includes 60" wide forward and 42" wide rearward lower compartments and (3) opening upper compartments and (1) Zico Overhead Ladder Rack.	$18,707
3120-0418	Officer 3/4 side body with full height 42" wide forward and 56" wide rearward enhanced extended compartmentation. Includes (1) 56" wide compartment over the wheel well. Compartments raised 8" due to roll-up doors to allow for addtional storage room.	$11,520
3120-0420	Officer side body with full height 36" wide forward and 45" wide rearward compartmentation. Includes (1) 56" wide compartment over the wheel well.	$11,475
3120-0421	Officer side diamond plate roof top compartment. Includes (2) hinged lift-up access doors with turn latches and grab handle(s) and (1) vertical hinged access door at the rear with push button latch to be. Each lid to have (1) bracket mounted LED light and to be wired to door ajar indicator in cab.	$2,225
3120-0422	Officer side body with full height 19.5" wide forward and 31" wide rearward compartmentation. Includes (1) 40" wide compartment over the wheel well.	$9,613
3120-0423	Officer side body with full height 32" wide forward and 50" wide rearward compartmentation. Includes (1) 56" wide compartment over the wheel well and one (1) storage tunnel beside the water tank.	$10,422
3120-0424	Officer side body with full height 54" wide forward and 48" wide rearward compartmentation. Includes (1) 56" wide compartment over the wheel well and one (1) storage tunnel located behind the upper (3) compartment back walls.	$15,100
3120-0425	Officer side body with half height 36" wide forward (above fuel fill area) and full height 50" wide rearward enhanced extended compartmentation. Includes (1) 56" wide compartment over the wheel well. Area below forward compartment will be for mounting of fuel fill.	$10,873
3120-0426	Officer side body with full height 26" and 56" wide forward compartments and 56" wide rearward compartmentation. Includes (1) 56" wide compartment over the wheel well and one (1) storage tunnel.	$17,249
3120-0427	Officer side body with full height 60" wide front and 54" wide rear compartments. Includes (1) 60" wide compartment over the wheel well and one (1) storage tunnel located behind reduced upper depth compartments. SS eMAX only.	$19,422
3120-0428	Officer side body with full height 36" wide forward and 50" wide rearward enhanced extended compartmentation. Includes (1) 33" wide compartment over the wheel well and (1) Zico Overhead Ladder Rack. Area below forward compartment will be for mounting of fuel fill.	$18,368
3120-0429	Officer side tandem body with upper and lower compartmentation. Includes 60" wide forward and 54" wide rearward compartments and (1) opening forward upper compartment with painted panels rearward.	$16,388
3120-0437	Rear aluminum smooth plate painted job color vertical hinged door on officer side roof top compartments. Includes thumb latch and wiring for door ajar switch.	$213
3120-0439	Officer side body with full height 26" and 56" wide forward and 56" wide rearward compartmentation. Includes (1) 33" wide compartment over the wheel well and (1) Zico Overhead Ladder Rack.	$21,253
3120-0441	Officer half side body with 36" wide forward and 56" wide rearward enhanced extended compartmentation. Includes adjustable ladder tracks.	$6,233
3120-0442	Officer side tandem body with upper and lower compartmentation. Includes 30" wide forward and 54" wide rearward compartments and (4) opening upper compartments. Includes overhead rack opening centered between upper compartments. Includes offseting upper compartments forward due to deck gun location and access panel on upper rear compartment face to deck gun piping.	$14,326
3120-0443	(1) officer side roof top compartment forward of hard suction storage area and (2) roof top comaprtments over hard suction storage area. Includes hinged raised compartment lids with turn latches and grab handle(s). The lids to have (1) bracket mounted LED light and to be wired to door ajar indicator in cab. Includes partition between roof top compartment and hard suction storage area. Floor to be provided above the hard suction storage area to use remaining area above.	$2,926
3120-0444	Officer half side body with 36" wide forward and 56" wide rearward enhanced extended compartmentation. Includes adjustable ladder tracks. 8" compartment raise to allow for taller opening with roll-up doors and smooth plate above wheel well area.	$6,719

3120-0445	Officer side tandem body with 60" wide forward and 54" wide rearward compartmentation. Forward compartment to be full height, rearward to be half height.	$10,782
3120-0446	Officer side diamond plate roof top compartment. Includes smooth plate painted vertical hinged access door at the rear with push button latch to be wired to door ajar indicator in cab.	$1,545
3120-0447	Officer side body with full height 54" wide forward and 36" wide rearward compartmentation. Includes (1) 33" wide compartment over the wheel well and (1) Zico Overhead Ladder Rack.	$18,645
3120-0449	Officer side body with full height 60" wide forward and 56" wide rearward compartmentation. Includes (1) 56" wide compartment over the wheel well.	$13,087
3120-0450	Officer half side body with 36" wide forward and 36" wide rearward compartmentation. Includes 30 degree rear body angle for greater angle of departure.	$5,006
3120-0453	Officer 3/4 side tandem body with full height 42" wide forward and 59" wide rearward compartmentation. Includes (2) 51.5" wide compartments over the wheel well.	$10,454
3120-0455	Officer side body with 19.5" wide forward and 31" wide rearward compartmentation. Includes (1) 40" wide compartment over the wheel well.	$9,613
3120-0456	Officer side body with full height 26" and 56" wide forward compartments and 56" wide rearward compartmentation. Includes (1) 56" wide compartment over the wheel well.	$14,451
3120-0457	Stainless steel officer side body with full height 48" wide forward and 70" wide rearward enhanced extended compartmentation. Includes (1) 54" wide compartment over the wheel well.	$13,245
3120-0458	Officer high side stainless steel body with 60" front and 60" rear. Five compartments, tandem axle. For use with single arm overhead ladder rack.	$17,567
3120-0460	Officer side tandem body with upper and lower compartmentation. Includes 30" wide forward and 54" wide rearward compartments and (4) opening upper compartments. Includes overhead rack opening centered between upper compartments. Includes offseting upper compartments forward due to deck gun location and access panel on upper rear compartment face to deck gun piping.	$14,326
3120-0461	2-arm ladder rack on officer side. The ladder rack includes Whelen 500 series TIR6 amber lights on each end to visually indicate when the rack is in motion. Restricts the top folding step (if optioned) from closing completely. Includes mounting bracket (if required, matching rear compartment face or compartment wrap finish) for components mounted on rear compartment face.	$15,968
3120-0462	Officer side roof top compartment contents: (2) 6" x 10' hard suction hoses (not included) stored horizontally. Includes stop bracket rearward of hard suction hoses.	$1,056
3120-0463	Officer side diamond plate roof top compartment. Includes verticay hinged access door at the rear with a "D-Ring" latch handle to be wired to door ajar indicator in cab.	$1,568
3120-0464	Stainless steel officer half side body with 36" wide front and 40" wide rear and 60" wide fender panel.	$5,449
3120-0465	Officer side tandem body with full height (1) 60" wide forward and (1) 60" wide rearward compartmentation. For use with Rear Mount pump.	$18,379
3120-0466	Officer side body with upper and lower compartmentation. Includes 36" wide forward and 36" wide rearward lower compartments and (3) opening upper compartments with (1) 33" wide compartment over the wheel well and (1) Zico Overhead Ladder Rack.	$16,772
3120-0467	Stainless steel officer side body with full height 60" wide forward and 60" wide rearward compartmentation. Includes (1) 54" wide compartment over the wheel well.	$14,006
3120-0468	Stainless steel officer side body with full height 48" wide forward and 58" wide rearward enhanced extended compartmentation. Includes (1) 60" wide compartment over the wheel well.	$12,782
3120-0469	Stainless steel officer side body with full height 54" wide forward and 54" wide rearward compartmentation with custom size reduced upper depth. Includes (1) 54" wide compartment over the wheel well and (1) custom size storage tunnel.	$16,816
3120-0471	Officer side tandem body with (2) 34" wide forward and 54" wide rearward compartmentation. (1) forward compartment to be full height, (1) forward and rearward to be half height.	$11,405
3120-0472	Officer 3/4 side body with full height 48" wide forward and 62" wide rearward enhanced extended compartmentation. Includes (1) 56" wide compartment over the wheel well and one (1) storage tunnel.	$14,685
3120-0473	(2) officer side roof top compartments with removable floors and extra width to inboard side. Includes hinged raised compartment lids with turn latches, grab handle(s) and gas shock hold open and drain line(s) ran to below body. Each lid to have (1) bracket mounted LED light and to be wired to door ajar indicator in cab.	$6,619
3120-0474	Rear aluminum smooth plated painted [#COL] vertically hinged door on officer side roof top compartments. Includes thumb latch and wiring for door ajar switch.	$213
3120-0475	Stainless steel officer side body with full height 60" wide forward and 60" wide rearward compartmentation. Includes (1) 54" wide compartment over the wheel well. Upper compartment depth only 12" IPO standard 14" due to 3-section and roof ladders in tunnel.	$14,006
3120-0476	Officer side body with full height 60" wide front and 54" wide rear compartments. Includes (1) 44" wide compartment over the wheel well and one (1) Zico overhead ladder rack. SS eMAX only.	$24,273
3120-0477	(2) Officer side roof top compartments. Includes hinged raised aluminum smooth plate with black Scorpion coating (IPOS diamond plate) compartment lids with turn latches and grab handle(s). Each lid to have (1) bracket mounted LED light and to be wired to door ajar indicator in cab.	$2,994
3120-0478	Officer side tandem body with 60" wide full height forward compartment. Rearward of the forward compartment to 3/4 height with 54" wide rearward compartmentation. Includes (2) 51.5" wide compartments over the wheel well.	$12,233
3120-0479	Officer side body with full height/full depth 30/60" wide front and 54" wide rear compartments. Includes (1) 60" wide compartment over the wheel well. SS eMAX only.	$17,631
3120-0480	Officer side body with full height 30/60" wide front and 54" wide rear compartments. Includes (1) 44" wide compartment over the wheel well, with Zico overhead ladder rack. SS eMAX only.	$25,929
3120-0481	Officer side body with full height 30/60" wide front and 54" wide rear compartments. Includes (1) 60" wide compartment over the wheel well and one (1) storage tunnel located behind reduced upper depth compartments. SS eMAX only.	$21,044

3120-0482	Officer side body with full height 50" wide forward and 42" wide rearward compartmentation. Includes (1) 33" wide compartment over the wheel well, (1) Zico overhead ladder rack. Rear perimeter or body raised 3" for improved departure angle.	$18,645
3120-0483	Officer full height side body with upper and lower compartmentation. Includes 42" wide forward and 56" wide rearward lower enhanced compartmentation and (3) opening upper compartments. For use with ladder storage in the hosebed.	$11,574
3120-0484	Officer side body with 19.5" wide forward and 31" wide rearward compartmentation. Includes (1) 40" wide compartment over the wheel well. Compartment tops raised approximately 6" to match hosebed height.	$10,160
3120-0485	Stainless steel officer half side body with 30" wide front and 40" wide rear and 60" wide fender panel. For use with suicide hinged R1 door (if applicable).	$5,449
3120-0487	Officer side body with full height 48" wide forward and 56" wide rearward enhanced extended compartmentation. Includes (1) 56" wide compartment over the wheel well.	$13,108
3120-0488	Vertical door stop for storage tunnel door.	$123
3120-0489	Officer side roof top compartment contents: (1) 10' hard suction hose (not included) stored horizontal. Includes stop bracket rearward of hard suction hoses and Nylatron compartment flooring.	$532
3120-0490	(2) officer side roof top compartments with extra width to inboard side. Includes hinged raised compartment lids with turn latches, grab handle(s) and gas shock hold open and drain line(s) ran to below body. Each lid to have (1) bracket mounted LED light and to be wired to door ajar indicator in cab. Compartment lid construction shall be aluminum smooth plate IPO diamond plate painted Black Scorpion (rough finish).	$5,709
3120-0491	Officer side body with upper and lower compartmentation. Includes 42" wide forward and 42" wide rearward lower compartments, (3) opening upper compartments. Includes (1) 33" wide compartment over the wheel well and (1) Zico Overhead Ladder Rack. Smooth plate compartment top painted black durabak.	$18,298
3120-0492	Officer 3/4 side body with (3) full height, rescue style, (2) forward compartments (48" and 30" wide) and (1) rearward compartment (24"). Includes (1) 56" wide compartment over the wheel well.	$8,034
3120-0493	Officer 3/4 side tandem stainless steel body with 35" front and 35" rear for flat back body design. Includes (2) 42" wide compartments over rear tandem wheels, with side dump valve between.	$11,973
3120-0494	Officer side roof top compartment. Includes vertically hinged access door at the rear with push button latch to be wired to door ajar indicator in cab.	$1,545
3120-0495	(2) officer side roof top compartments with extra width to inboard side. Includes hinged raised compartment lids with turn latches, grab handle(s) and gas shock hold open and drain line(s) ran to below body. Each lid to have (2) bracket mounted LED lights and to be wired to door ajar indicator in cab.	$5,400
3120-0496	Officer side tandem body with full height 30" wide forward and 30" wide rearward compartmentation. Includes (2) 42" wide compartments over the wheel well and overhead rack opening centered between upper compartments.	$13,222
3120-0498	Stainless steel officer side body with full height 48" wide forward and 48" wide rearward compartmentation. Includes (1) 54" wide compartment over the wheel well.	$12,075
3120-0499	Officer 1/2 side tandem stainless steel tanker body with 60" front and 60" rear for flat back body design. Includes (2) 55" wide tandem wheel fender panels.	$13,622
3120-0500	Officer side body with full height 24" wide forward and 36" wide rearward compartmentation. Includes (1) 56" wide compartment over the wheel well. Rear bottom corner of truck will be angled 30 degrees for a greater rear angle of departure.	$9,937
3120-0501	Officer side body with full height 36" wide forward and 62" wide rearward enhanced extended compartmentation. Includes (1) 56" wide compartment over the wheel well and one (1) storage tunnel.	$14,675
3120-0502	Officer full height side body with 36" wide forward and 48" wide rearward compartmentation. Includes (2) 28.5" wide compartments over the wheel well for the installation of Zico Overhead Ladder Rack and one forward area for side tank dump. For use with custom chassis only.	$9,929
3120-0503	Officer side tandem body with upper and lower compartmentation. Includes 30" wide forward full height and 30" wide low rearward compartments and (2) opening upper compartments. Includes offseting upper compartments forward due to deck gun location and access panel on upper rear compartment face to deck gun piping.	$13,745
3120-0504	Officer side body with full height 48" wide forward and 48" wide rearward compartmentation. Includes (1) 33" wide compartment over the wheel well and (1) Zico Overhead Ladder Rack. Ladder rack controls to be located on officer side rear compartment face above tail lights. Compartment material to be 5083-H321.	$19,890
3120-0508	Officer side ERV body with full height 37" forward and 52" rearward. Includes (1) 56" wide compartment over the wheel well. Includes (2) roof top compartments with hinged raised lids with thumb latches, grab handle(s), and gas shock hold open and drain line(s) ran to below body.Eack lid to have (1) bracket mounted LED light and to be wired to door ajar indicator in cab.	$18,998
3120-0509	Officer side body with full height 24" wide forward and 36" wide rearward compartmentation. Includes (1) 56" wide compartment over the wheel well.	$9,937
3120-0510	Officer half side body with 38" wide forward and 56" wide rearward compartment. Includes adjustable ladder tracks.	$6,544
3120-0511	The rear body corner on the right side to extend full height and a smooth plate inner panel.	$192
3120-0512	Notch compartment R2 in upper back wall rearward due to the 5" rear suction and provide a cover box.	$331
3120-0513	(2) Officer side roof top compartments. Includes hinged raised compartment lids with thumb latches and grab handle(s). Each lid to have (1) bracket mounted LED light and to be wired to door ajar indicator in cab.	$2,655
3120-0514	Officer half side tandem body with (2)41" wide forward and (2)32" wide rearward compartmentation.	$11,819

3120-0517	Stainless steel officer side body with full height 40" wide forward and 48" wide rearward compartmentation. Includes (1) 60" wide compartment over the wheel well.	$11,430
3120-0519	Officer side roof top compartment contents: (1) 12'-14'+ hard suction hose (not included) stored horizontal. Includes Nylatron compartment flooring. Length of capacity depends on body configuration.	$619
3120-0520	Officer side body with full height 48" wide forward and 62" wide rearward compartmentation. Includes (1) 56" wide compartment over the wheel well.	$12,320
3120-0521	Stainless steel officer side body with full height 48" wide forward and 58" wide rearward enhanced extended compartmentation. Includes (1) 60" wide compartment over the wheel well.	$12,535
3120-0522	Officer 3/4 side body with full height 36" wide forward and 42" wide rearward compartmentation. Includes (1) 56" wide compartment over the wheel well.	$7,425
3120-0524	Officer side body with full height 54" wide forward and 48" wide rearward compartmentation. Includes (1) 56" wide compartment over the wheel well.	$12,267
3120-0526	(2) officer side roof top compartments. Includes hinged raised compartment lids with turn latches and grab handle(s). The rear compartment to include (1) vertically hinged access door at the rear with push button latch for access to (1) 6" X10' hard suction tube. Each lid to have (1) bracket mounted LED light and to be wired to door ajar indicator in cab.	$2,751
3120-0527	2-arm ladder rack on officer side. Modified pivot position to allow the ladder rack to deploy at 48" to the center of ladders as loaded or less from ground level. The ladder rack includes amber lights on each end to visually indicate when the rack is in motion. Restricts the top folding step (if optioned) from closing completely. Includes mounting bracket (if required, matching rear compartment face or compartment wrap finish) for components mounted on rear compartment face.	$12,683
3120-0529	Officer side body with full height 42" wide forward and 56" wide rearward compartmentation. Includes (1) 56" wide compartment over the wheel well.	$12,865
3120-0530	Officer high side stainless steel tanker body with 52" front and 52" rear rescue style, R2 and R3 modified for one-arm Zico overhead ladder rack. Four compartments, tandem axle. Ladder rack not included, requires adding sales code 3365-0185-199.	$19,727
3120-0531	Officer side body with full height, full depth 60" wide front and 54" wide rear compartments. Includes (1) 44" wide compartment over the wheel well and one (1) Zico overhead ladder rack. SS eMAX only.	$24,481
3120-0532	Double hard suction storage rack: Two (2) hard suction hose storage racks shall be provided on the driver side of the body. The racks shall be positioned with one (1) rack located beside the other.	$1,056
3120-0533	Stainless steel officer side special tall body with full height 40" wide forward and 58" wide rearward enhanced extended compartmentation. Includes (1) 54" wide compartment over the wheel well.	$12,320
3120-0535	Officer side body with full height 60" wide forward and 62" wide rearward enhanced extended compartmentation. Includes (1) 33" wide compartment over the wheel well, one (1) storage tunnel and (1) Zico Overhead Ladder Rack.	$24,033
3120-0536	Officer side body with full height 50" wide forward and 36" wide rearward compartmentation. Includes (1) 56" wide compartment over the wheel well. Rear perimeter or body raised 4" for improved departure angle.	$11,421
3120-0538	Officer half side stainless steel body with 40" wide forward and 58" wide rearward enhanced extended compartmentation. Includes adjustable ladder tracks, and 60" wide rear fender.	$6,358
3120-0539	(2) officer side roof top compartments. Includes hinged raised compartment lids with slam style D-ring latches and no grab handles. Each lid to have (1) bracket mounted LED light and to be wired to door ajar indicator in cab.	$2,782
3120-0540	(2) officer side roof top compartments. Includes hinged raised compartment lids with turn latches and grab handle(s). Each lid to have (1) bracket mounted LED light and to be wired to door ajar indicator in cab. Includes fixed floor with hard suction storage below accessible through hinged rear panel access door with bent D-ring latch.	$3,494
3120-0541	Officer side body with full height 60" wide forward and 42" wide rearward compartmentation. Includes (1) 33" wide compartment over the wheel well and (1) Zico Overhead Ladder Rack.	$18,240
3120-0542	Officer side body with full height 42" wide forward and 42" wide rearward compartmentation. Includes (1) 56" wide compartment over the wheel well.	$11,218
3120-0544	Officer half side body with 42" wide forward and 50" wide rearward enhanced extended compartmentation. Includes adjustable ladder tracks.	$6,070
3120-0545	Officer half side body with 24" wide forward and 50" wide rearward enhanced extended compartmentation.	$5,254
3120-0546	Officer side smooth plate roof top compartment and painted black Durabak. Includes vertically hinged smooth plate access door painted job color at the rear with push button latch to be wired to door ajar indicator in cab.	$1,932
3120-0547	(2) officer side roof top compartments with extra width to inboard side. Includes hinged raised compartment lids with turn latches, grab handle(s) and gas shock hold open and drain line(s) ran to below body. Each lid to have (1) Amdor strip LED light and to be wired to door ajar indicator in cab.	$6,061
3120-0548	Officer full height side body with (3) full height, rescue style, forward compartments (48" and 30" wide) and (1) rearward compartment (24" wide), plus (1) upper compartment over w/well(33" wide and offset rearward of the rack opening).	$9,447
3120-0550	Officer side tandem body with (1) 36" wide and (1) 20" wide forward and 54" wide rearward compartmentation. (1) forward compartment to be full height, (1) forward and rearward to be half height.	$9,625
3120-0552	Officer Full height forward compartment and 3/4 side rear of R1 tandem body with 42" wide forward and 42" wide rearward compartmentation. Includes (2) 51.5" wide compartments over the wheel well. Lowered W/Well for extra compt heigth. Side Dump Valves between Tandems N/A.	$13,978

3120-0553	(2) officer side roof top compartments. Includes hinged raised compartment lids with turn latches and grab handle(s). Each lid to have (3) bracket mounted EION LED lightS and to be wired to door ajar indicator in cab.	$2,655
3120-0555	Officer side tandem body with upper and lower compartmentation. Includes 60" wide full height forward and 54" wide half height rearward compartments and (1) opening forward upper compartment with painted panels rearward.	$16,925
3120-0556	Officer side rear mount pumper body with full height 48" wide forward and 60" wide rearward compartmentation. Includes (1) 56" wide compartment over the wheel well and provisions to rear mount pump panel in rearward side compartment.	$12,586
3120-0557	Officer side body with full height 60" wide forward and 48" wide rearward compartmentation. Includes (1) 56" wide compartment over the wheel well.	$13,087
3120-0558	(2) officer side roof top compartments for instillation of DOT/ASME bottles. Includes hinged raised compartment lids with turn latches and grab handle(s). Each lid to have (1) bracket mounted LED light and to be wired to door ajar indicator in cab.	$2,655
3120-0559	Officer side body with full height 42" wide forward and 42" wide rearward compartmentation. Includes (1) 56" wide compartment over the wheel well and one (1) storage tunnel beside the water tank.	$13,699
3120-0560	Officer side body with full height 34" and 48" wide forward and 56" wide rearward compartmentation. Includes (1) 33" wide compartment over the wheel well and (1) Zico Overhead Ladder Rack.	$21,773
3120-0561	Officer side body with full height 30" wide forward and 44" wide rearward compartmentation. Includes (1) 56" wide compartment over the wheel well.	$10,873
3120-0562	Officer side body with full height 42" and 40" wide forward compartments and 56" wide rearward compartmentation. Includes (1) 56" wide compartment over the wheel well. Side Mount eMAX only.	$14,971
3120-0563	Zico hydraulic drop-down ladder rack (LAS-XT) with 12 inches additional drop. Includes spacer brackets with ladder rack controller located on the officer side pump panel.	$7,526
3120-0564	Stainless steel officer side body with full height/full depth 60" wide forward and 60" wide rearward compartmentation. Includes 60" wide compartment over the wheel well and a 2-arm hydraulic overhead ladder rack.	$14,684
3120-0566	Stainless steel officer side body with full height 48" wide forward and 40" wide rearward compartmentation. Includes (1) 60" wide compartment over the wheel well.	$11,914
3120-0568	Officer side rear mount rescue pumper body with full height 38" wide forward and 42" wide rearward compartmentation with officer side ladder storage tunnel. Includes (1) 56" wide compartment over the wheel well and 30 degree angled rear body for improved angle of departure.	$15,141
3120-0569	Stainless steel officer side body with full height, full depth 48" wide forward and 40" wide rearward compartmentation. Includes (1) 54" wide compartment over the wheel well.	$12,075
3120-0570	Officer full height body side with (1) 48" wide, Full Height forward compartment, (1) 30" wide, lower forward compartment adjacent to w/well, (2) upper compartments (57" wide each), the rearward upper having a rear compartment face access door for portable tank storage, and (1) lower rearward compartment (24") to rear of the w/well.	$11,323
3120-0571	Stainless steel officer side body with full height 54" wide forward and 48" wide rearward compartmentation. Includes (1) 60" wide compartment over the wheel well.	$13,042
3120-0572	Officer side body with full height 60" wide front and 54" wide rear compartments. Includes (1) 60" wide compartment over the wheel well and one (1) storage tunnel located behind reduced upper depth compartments. SS eMAX only.	$19,422
3120-0573	(2) side low profile stepped interior roof top compartments with extra width to inboard side. Includes hinged raised compartment lids with turn latches,gas shock hold opens and drain line(s) ran to below body. Each lid to have (1) bracket mounted LED light and to be wired to door ajar indicator in cab. Lids shall be without grab handles for lowered OAH and shall have a stepped interior.	$5,415
3120-0574	Officer half side body with 42" wide forward and 36" wide rearward compartmentation. Includes adjustable ladder tracks.	$5,220
3120-0575	Stainless steel officer side body with full height 40" wide forward and 58" wide rearward enhanced extended compartmentation. Includes (1) 60" wide compartment over the wheel well.	$13,855
3120-0576	Officer side rear mount rescue pumper body with full height 60" wide forward and 44" wide rearward compartmentation with officer side ladder storage tunnel. Includes (1) 56" wide compartment over the wheel well and 30 degree angled rear body for improved angle of departure.	$17,141
3120-0577	Officer side rear mount rescue pumper body with full height 60" wide forward and 44" wide rearward compartmentation. Includes (1) 56" wide compartment over the wheel well and 30 degree angled rear body for improved angle of departure.	$14,307
3120-0578	Officer side body with 3/4 height 36" wide forward and 56" wide rearward compartmentation. Includes (1) 56" wide x 20" high compartment over the wheel well.	$8,405
3120-0579	Officer side diamond plate roof top compartment. Includes smooth plate painted vertical hinged access door at the rear with D-Ring latch to be wired to door ajar indicator in cab.	$1,570
3120-0580	(1) officer side roof top compartment. This is to be used for long handle tool storage and to be accessible through hinged rear panel access door with trigger style latch. Includes (1) bracket mounted LED light and to be wired to door ajar indicator in cab. Includes fixed forward wall at 143".	$2,915
3120-0581	Stainless steel officer half side body with 40" wide forward, 40" wide rear and a 60" wide fender panel. Includes adjustable ladder tracks.	$5,582
3120-0582	Officer side body with full height, full depth 30/60" wide front and 54" wide rear compartments. Includes (1) 44" wide compartment over the wheel well, with Zico overhead ladder rack. SS eMAX only.	$26,449

3120-0583	(1) shallow officer side roof top compartment with extra width to inboard side, forward position. Includes hinged raised compartment lid with turn latch, grab handle(s) and gas shock hold open and drain line(s) ran to below body. (1) rear opening hard suction storage compartment with lift up vertically hinged door w/bent D-ring latch. Each compartment to have a (1) LED light and to be wired to door ajar indicator in cab. Compartments shorter to allow recessing of ladder rack.	$5,545
3120-0584	Officer half side body with 30" wide forward and 60" wide rearward extended compartmentation. Includes adjustable ladder tracks.	$6,388
3120-0585	Stainless steel officer half side body with 30" wide front and 40" wide rear and 60" wide fender panel. For use with suicide hinged R1 door.	$5,208
3120-0586	(2) officer side roof top compartments. Includes hinged raised compartment lids with turn latches and grab handle(s). Each lid to have (1) bracket mounted ROM V4 LED strip light and to be wired to door ajar indicator in cab.	$3,016
3120-0587	Officer side body with full height 68" wide forward and 56" wide rearward compartmentation. Includes (1) 56" wide compartment over the wheel well and one (1) storage tunnel located behind the upper (3) compartment back walls.	$16,477
3120-0588	Stainless steel officer side body with full height 60" wide forward and 60" wide rearward compartmentation with reduced upper depth. Includes (1) 60" wide compartment over the wheel well and (1) storage tunnel.	$18,159
3120-0589	Officer full height side body with (3) full height, rescue style, forward compartments (48" and 30" wide) and (1) rearward compartment (24" wide), (1) upper compartment (56" wide).	$9,447
3120-0590	Officer side rear mount rescue pumper body with full height 38" wide forward and 42" wide rearward compartmentation. Includes (1) 56" wide compartment over the wheel well and 30 degree angled rear body for improved angle of departure.	$12,307
3120-0591	(2) officer side roof top compartments with extra width to inboard side. Compartment top and lids to be smooth plate painted black Durabak. Includes hinged raised compartment lids with turn latches, grab handle(s) and gas shock hold open and drain line(s) ran to below body. Each lid to have (1) bracket mounted LED light and to be wired to door ajar indicator in cab.	$6,632
3120-0592	Stainless steel officer side body with full height 48" wide forward and 48" wide rearward compartmentation. Includes (1) 60" wide compartment over the wheel well, and a storage tunnel.	$16,129
3120-0593	Electric Lock for Zico Hydraulic Drop Down Ladder Rack.	$2,075
3120-0594	(2) officer side roof top compartments with extra width to inboard side. Includes hinged raised compartment lids with turn latches, grab handle(s) and gas shock hold open and drain line(s) ran to below body. Each lid to have (1) bracket mounted ROM V4 LED strip light and to be wired to door ajar indicator in cab.	$5,667
3120-0595	Officer side body with full height 30in. wide forward and 62in. wide rearward enhanced extended compartmentation. Includes (1) 56in. wide compartment over the wheel well and a cavity (using space from R1) between R1 and R2 for vertical exhaust to exit on outer compartment top just forward of wheel well.	$15,275
3120-0596	Officer half side tandem body with 60" wide forward and 48" wide rearward compartmentation.	$8,750
3120-0597	Officer side body with full height 60" wide forward and 56" wide rearward compartmentation. Includes (1) 56" wide compartment over the wheel well and one (1) storage tunnel located behind the upper (3) compartment back walls. Rear perimeter or body raised 3" for improved departure angle.	$15,921
3120-0598	Officer side body with full height 30" wide forward and 50" wide rearward enhanced extended compartmentation. Includes (1) 33" wide compartment over the wheel well and (1) Zico Overhead Ladder Rack.	$17,674
3120-0600	Officer half side body with 44" wide forward and 36" wide rearward compartmentation and 28" high opening. Includes adjustable ladder tracks.	$7,137
3125-0005	eMAX Forward body configuration - SM. Includes a lower double preconnect storage area, upper transverse storage area, rack in upper storage area for (2) backboards (vertical stored offset forward - sleeve each side of center pump access), center front pump access doors and removable center floor in upper area.	$2,532
3125-0006	Full one piece body for use with rear mounted pump. Compartment widths front to rear: 44"/56"/33". Rear body to have smooth plate panels (no recess area for trafic advisor) and center area for rear mounted pump and pump panel (rear center body area to have no compartment interior). Includes 92" high body.	$16,005
3125-0007	eMAX crosswalk module. Includes raised floor, walkway storage compartments with push button latches, running boards, (1) dual lighted LED folding step each side and access handrails mounted on the eMAX front body extension.	$1,603
3125-0008	eMAX Forward body configuration - SM. Includes a lower double preconnect storage area, upper preconnect storage area, sleeve in upper storage area for (2) backboards (vertical stored offset forward - sleeve is removable for center pump access), center front pump access doors and removable center floor in upper area.	$2,532
3125-0009	eMAX Forward body configuration - TM. Includes a lower double preconnect storage area, provision for top mount pump operator's panel and center front pump access door.	$2,532
3125-0011	eMAX Forward body configuration - SM. Includes a lower transverse storage area for (2) backboards and (1) stokes basket with boxed out style access door (wired to door ajar). Center area to be sleeved for pump access with center front pump access door and removable center floor area.	$2,310
3125-0013	SS eMAX forward body configuration - SM. Includes a lower double preconnect storage area, upper preconnect storage area, sleeve in upper storage area for (2) backboards (vertically stored offset forward - sleeve is removable for center pump access), center front pump access doors and removable center floor in upper area.	$3,089
3125-0014	eMAX Forward body configuration. Includes a lower transverse storage area, rack in upper storage area for (2) backboards (vertically stored offset forward - sleeve each side of center pump access), upper transverse storage area, center front pump access doors, removable center floor in upper and lower areas and upper storage pan (pan to extend into forward body area and be wider to the rear).	$2,532

3125-0015	eMAX Forward body configuration. Includes a rack in lower storage area for (2) backboards (vertically stored offset forward - sleeve each side of center pump access), lower transverse storage area, upper transverse storage area, center front pump access doors, removable center floor in upper and lower areas and upper storage pan (pan to extend into forward body area and be wider to the rear).	$2,532
3125-0016	eMAX Forward body configuration - SM. Includes a lower double preconnect area, upper transverse storage area, rack in upper storage area for (1) 17' Little Giant ladder (vertically stored offset forward - sleeve each side of center pump access), center front pump access doors and removable center floor in upper area.	$2,790
3125-0017	eMAX Forward body configuration - SM. Includes a transverse storage area above pump panels that include (2) fixed shelves going full length (left to right) of the transverse compartment. The lower most shelf shall be approximately 11" from the floor. It shall accommodate a door on each side approximately 10" in height. The doors shall be mounted below the lower most shelf and shall be recessed approximately 3" from each side. The smooth aluminum doors shall be 3/16" thick, include a thumb latch and have a vertical hinge mounted to the rear side. The second shelf shall be mounted approximately 18" above the lower shelf. The lower area floor shall be constructed from 1/8" smooth aluminum plate and be bolted in to facilitate pump system servicing. The outboard floors of the upper area shall be constructed from 1/8" smooth aluminum plate. The center upper floor shall be 1/8" smooth aluminum plate and removable to provide easy access to the pump manifold and valves.	$2,790
3125-0018	eMAX Forward body configuration - SM. Includes a lower double preconnect storage area, extruded boxed out upper transverse storage area with horizontal hinged door each side with push button latch and pull strap, rack in upper storage area for (2) backboards (vertical stored offset forward - sleeve each side of center pump access) and (1) stokes basket (offset rearward) - 84.5" long x 24" high x 7.5" deep, center front pump access doors, removable center floor in upper area.	$2,867
3125-0019	SS eMAX forward body configuration - SM. Includes a lower double preconnect storage area, sleeve in upper storage area for backboards or other transverse items with lift-up access door each side (stored offset forward - sleeve is removable for center pump access), center front pump access doors and removable center floor in upper area.	$3,089
3125-0020	eMAX Forward body configuration - TME. Includes a lower double preconnect storage area, upper transverse storage area, rack in upper storage area for (2) backboards (vertically stored offset forward - sleeve each side of center pump access), center front pump access doors and removable center floor in upper area.	$2,532
3125-0021	An eMAX forward body configuration - SM. Includes a lower double preconnect storage area, upper transverse storage area, rack in upper storage area for (1) 13' Little Giant Ladder (vertically stored offset forward sleeve each side of center pump access) and (1) Ferno Model 71-S two piece stokes basket (vertically stored), center front pump access doors with D-Ring latch and removable center floor in upper area.	$2,971
3125-0023	OBSOLETE. USE 3125-0018	$2,532
3125-0024	OBSOLETE. USE 3125-0032	$2,867
3125-0025	eMAX Forward body configuration - SM. Includes a lower double preconnect storage area, upper preconnect storage area, sleeve in upper storage area for (2) backboards (vertically stored offset forward - sleeve is removable for center pump access), center front pump access doors and removable center floor in upper area. Upper logo panel and storage door to be smooth plate for paint color or zolotone application.	$2,532
3125-0026	Full one piece body for use with rear mounted pump and 30 degree angle of departure with flip down tailboard and handrails- (2) vertically on trailing edge of body and horizontally mounted handrail(s) below hosebed. Compartment widths front to rear: 24"/56"/42". Compartment openings front to rear: 24"/56"/30". Rear body to have smooth plate panels (no recess area for trafic advisor) and center area for rear mounted pump and pump panel (rear center body area to have no compartment interior). R1 compartment floor to be raised and the bottom portion of the compartment to have a panel for routing the exhaust.Includes 95" high body.	$22,910
3125-0027	SS eMAX forward body configuration - SM. Includes a lower double preconnect storage area, upper preconnect storage area (rearward), open storage area for dealer supplied hydraulic system (offset forward) , center front pump access doors and removable center floor in upper area. Bolt on ventilated brushed stainless steel cover plates on both ends of forward open storage area.	$3,089
3125-0028	eMAX Forward body configuration - SM. Includes a lower double preconnect storage area, upper transverse storage area with D-Ring latch each door, rack in upper storage area for (2) backboards (vertically stored offset forward - sleeve each side of center pump access), center front pump access doors and removable center floor in upper area.	$2,692
3125-0029	eMAX Forward body configuration - SM. Includes a lower double preconnect storage area, upper preconnect storage area, and upper forward area for dry lay. Center front pump access doors and removable center floor in upper area.Pump module opening 23" wide for use with roll-up doors.	$3,055
3125-0030	Includes a lower double preconnect storage area, sleeve in upper storage area for long handle tools and/or other transverse items with lift-up access door each side- (sleeve is removable for center pump access), center front pump access doors and removable center floor in upper area. Upper area recessed at depth of front eMAX body storage pan.	$2,829
3125-0031	eMAX Forward body configuration for use with a (2) arm ladder rack. - SM. Includes a lower double preconnect storage area, upper transverse storage area and deck gun piping access, center front pump access doors and removable center floor in upper area.	$3,052
3125-0032	eMAX Forward body configuration - SM. Includes a lower double preconnect storage area, extruded boxed out upper preconnect/storage area with horizontal hinged door each side with push button latch and pull strap, rack in upper storage area for (1) stokes basket (offset forward) - 84.5" long x 24" high x 7.5" deep and (1) preconnect area (offset rearward), center front pump access doors, removable center floor in upper area.	$2,867

3125-0033	eMAX Forward body configuration for use with a (2) arm ladder rack and raised speedlays for 4X4 application. - SM. Includes a lower double preconnect storage area, upper transverse storage area and deck gun piping access, center front pump access doors and removable center floor in upper area.	$3,052
3125-0034	eMAX Forward full width body configuration - SM. Includes a lower double preconnect storage area, upper full usable body width transverse storage area, rack in upper storage area for (2) backboards (vertical stored offset forward and misc. storage rearward - sleeve each side of center pump access), center front pump access doors and removable center floor in upper area. e-MAX forward pump module to match body height.	$6,463
3125-0035	OBSOLETE	$22,910
3125-0036	eMAX Forward body configuration - SM. Includes a lower double preconnect storage area, upper transverse storage area, an adjustable storage rack in upper storage area for (2) backboards (or similar items, vertically stored offset forward - sleeve each side of center pump access) with single preconnect storage rearward, center front pump access doors and removable center floor in upper area.	$2,648
3125-0037	SS eMAX forward body configuration - SM. Includes a lower double preconnect storage area, sleeve in upper storage area for (1) stokes basket or other transverse items with boxed out style lift-up access doors (wired to door ajar) each side (sleeve is removable for center pump access), center front pump access doors and removable center floor in upper area.	$3,304
3125-0038	eMAX Forward Full Body Width configuration - SM. Includes a transverse double preconnect storage area, one single lower, and one single upper, with a bolt-on partition to keep storage trays from sliding foroward. Both Trays shall accommodate a full height roll-up door on each side of body. Module also includes a center front pump access door, and a removable center floor in the upper area.	$6,463
3125-0039	eMAX Forward body configuration - SM. Includes an extruded boxed out lower double preconnect storage area, upper transverse storage area, sleeve in upper transverse storage area with provision for roll-up door each side, sleeve each side of center pump access) and (1) stokes basket (forward) - 86" long x 24.5" high x 8" deep, center front pump access doors, removable center floor in upper area.	$2,867
3125-0040	eMAX Forward body configuration - SM. Includes a lower double preconnect storage area, extruded boxed out upper preconnect/storage area with horizontal hinged door each side with push D-ring latch and pull strap, rack in upper storage area for (1) stokes basket (offset forward) - 84.5" long x 24" high x 7.5" deep and (1) preconnect area (offset rearward), center front pump access doors, removable center floor in upper area.	$2,867
3125-0041	eMAX Forward body configuration - SM. Includes a lower double preconnect storage area, upper transverse storage area, rack in upper storage area for (2) backboards (horizontally stored - sleeve each side of center pump access), center front pump access doors and removable center floor in upper area.	$2,807
3130-0003	Pump module. Includes 39" wide pump panel opening and running boards.	$5,096
3130-0004	Pump module. Includes 45" wide pump panel opening and running boards.	$5,096
3130-0005	Pump module. Includes 51" wide pump panel opening and running boards.	$5,096
3130-0006	Pump module. Includes 57" wide pump panel opening and running boards.	$5,096
3130-0007	Crosswalk module.Includes running boards, (1) folding step each side and access handrails mounted on the pump module.	$1,004
3130-0008	Crosswalk module. Includes walkway storage compartments with push button latches, running boards, (1) folding step each side and access handrails mounted on the pump module.	$1,465
3130-0009	Speedlay module. Includes area for (2) speedlays with trays, (1) area for dry storage, lower storage compartments with push button latches and running boards.	$1,757
3130-0010	Transverse Module (narrow). Locate forward of pump area. Includes a single compartment opening per side (with a shallow lower area and a transverse upper area with diamond plate flooring) and running boards.	$2,246
3130-0011	Transverse Module (full width). Locate forward of pump area. Includes a single compartment opening per side (with a shallow lower area and a transverse upper area with smooth plate flooring).	$3,107
3130-0012	Upper SM pump module with double stacked double crosslays and diamond plate storage pan.	$1,502
3130-0013	Upper SM pump module with single stacked double crosslays and diamond plate storage pan.	$1,502
3130-0014	Upper SM pump module with single stacked triple crosslays and diamond plate storage pan.	$1,884
3130-0015	Upper SM pump module with single stacked double crosslay, backboard storage and diamond plate storage pan.	$2,560
3130-0016	Upper TM pump module with double stacked double crosslays.	$1,676
3130-0017	Upper TM pump module with single stacked double crosslays.	$1,676
3130-0018	Upper TM pump module with single stacked double crosslays and backboard storage.	$2,696
3130-0020	Upper TM pump module with diamond plate storage pan.	$1,757
3130-0021	Upper TM pump module with backboard storage and diamond plate storage pan.	$2,151
3130-0022	Speedlay module. Includes area for (2) speedlays with trays, (1) area for backboard storage with hinged doors with latches, lower storage compartments with push button latches and running boards.	$2,777
3130-0023	Speedlay module. Includes area for (3) speedlays with trays, lower storage compartments with push button latches and running boards.	$2,139
3130-0024	Upper SM pump module with diamond plate storage pan (only).	$1,631
3130-0030	Stainless steel pump module. Includes 39" wide pump panel opening and running boards.	$6,373
3130-0031	Stainless steel pump module. Includes 45" wide pump panel opening and running boards.	$6,373
3130-0032	Stainless steel pump module. Includes 51" wide pump panel opening and running boards.	$6,373
3130-0033	Stainless steel pump module. Includes 57" wide pump panel opening and running boards.	$6,373
3130-0048	Upper TM pump module with back board storage and diamond plate storage pan.	$2,688
3130-0055	Stainless steel speedlay module. Includes area for (3) speedlays with trays, lower storage compartments with push button latches and running boards.	$2,671
3130-0062	Upper SM pump module with quad single stacked crosslays and diamond plate storage pan.	$2,266

3130-0063	Upper SM pump module with quad single stacked crosslays and diamond plate storage pan. The rear crosslay is for dry hose storage.	$2,266
3130-0064	Upper stainless steel SM pump module with quad single stacked crosslays and diamond plate storage pan.	$2,832
3130-0065	Upper stainless steel SM pump module with quad single stacked crosslays and diamond plate storage pan. The rear crosslay is for dry hose storage.	$2,832
3130-0067	Upper TM pump module with single stacked triple crosslays. Includes (2) dividers.	$1,863
3130-0068	Upper TM pump module with single stacked triple crosslays and backboard storage.	$3,222
3130-0069	Upper SM pump module with double stacked triple dry crosslays. Crosslay floor to be hinged and accessed from driver side. Include gas shocks, hold open rod, adj tracks and (2) dividers w/handhold cut-outs on both ends.	$4,701
3130-0070	Pump module. Includes lowered area for lowered upper module and 45" wide pump panel opening and running boards.	$6,373
3130-0071	Upper SM pump module with single stacked triple crosslay, backboard storage and diamond plate storage pan.	$2,942
3130-0072	Upper SM pump module with single stacked triple crosslays and diamond plate storage pan. Upper module to be full width as applicable to match lower module.	$2,823
3130-0083	Speedlay module. Includes area for triple speedlays with divider(s) and lower storage compartments with push button latches and running boards.	$2,139
3130-0084	Speedlay module to have (2) dividers for a triple speedlay configuration. Each divider to be notched for preconnect nozzles. Preconnect plumbing to be internal to the speedlay.	$390
3130-0085	Upper TM pump module with single stacked 2.5" crosslay and 2.5" double single stacked dry crosslay.	$2,696
3130-0086	Driver side SM module extension for vertical exhaust. Includes forward extended running board.	$282
3130-0088	Speedlay module to have (1) divider for a double configuration. The divider is to be held short for preconnect nozzle. Preconnect plumbing to be internal to the speedlay. Rearward area to be for backboard storage and includes vertically hinged doors with push-button latching.	$731
3130-0089	Upper SM pump module with (5) single stacked crosslays- (4) 1.5" AND (1) 2.5" rearward. Includes open back style pan for generator.	$2,607
3130-0090	Pump module. Includes 63" wide pump panel opening and running boards.	$5,096
3130-0093	Upper SM pump module with double stacked triple crosslays and diamond plate storage pan.	$2,053
3130-0095	Crosswalk module. Includes walkway storage compartments with push button latches, running boards, (1) diamond plate gator grip step each side and access handrails mounted on the pump module.	$1,692
3130-0096	Speedlay module(stacked). Includes area for (2) stacked speedlays and (1) upper speedlay (crosslay style), lower storage compartments with push button latches and running boards. Lower speedlay, upper speedlay and crosslay.	$2,385
3130-0098	Speedlay module full width. Includes area for (4) speedlays, (2) speedlays (stacked) per side with partition in center of module. Includes lower storage compartments with push button latches.	$3,883
3130-0099	Pump module. Includes 45" wide pump panel opening and running boards. Interior of module to have 70" width.	$5,096
3130-0100	Upper SM pump module with triple single stacked crosslays and diamond plate storage pan. Module is for use with a wider lower module base. To include a non-stepped pan with 1.5" extrusion rearward and narrow crosslay widths.	$1,884
3130-0101	Upper SM pump module with single stacked double crosslay, backboard storage and diamond plate storage pan. Interior to be 70" wide to match lower module.	$2,560
3130-0102	Speedlay module(stacked). Includes area for (2) speedlays, lower storage compartments with push button latches and running boards.	$2,139
3130-0103	Speedlay module. Includes area for (2) speedlays with center divider, lower storage compartments with push button latches and running boards.	$1,757
3130-0107	Speedlay module. Includes area for (2) speedlays with dividers, (1) area for backboard storage with hinged doors with latches, lower storage compartments with push button latches and running boards.	$2,777
3130-0111	Upper SM pump module with single stacked triple crosslay, backboard storage and diamond plate storage pan.	$3,678
3130-0114	Pump module. Includes 51" wide pump panel opening and running boards. Interior of module to have 70" width.	$5,184
3130-0115	Upper SM pump module with single stacked double crosslays and diamond plate storage pan. Interior of module to have 70" width.	$1,502
3130-0116	Pump module. Includes 39" wide pump panel opening and running boards. Interior of module to have 70" width.	$5,184
3130-0119	Upper TM pump module with diamond plate storage pan. Interior to be 70" wide to match lower module.	$1,757
3130-0120	Crosswalk module.Includes running boards, (1) folding step each side and access handrails mounted on the pump module. Interior to be 70" to match lower module.	$1,004
3130-0121	Crosswalk module.Includes walkway storage compartments with push button latches, running boards, (1) folding step each side and access handrails mounted on the pump module.Interior to be 70" wide to match lower module.	$1,465
3130-0125	Upper SM pump module with triple single stacked crosslays and diamond plate storage pan. Interior to be 70" wide to match lower module.	$1,884
3130-0127	Upper TM pump module with single stacked double crosslays. Interior to be 70' wide to match lower module.	$1,676
3130-0155	Upper TM pump module with single stacked triple crosslays. Includes (2) dividers. Interior to be 70" to match lower module.	$1,863
3130-0164	Upper SM pump module with double stacked triple crosslays (single stacked depth) and diamond plate storage pan.	$4,358

3130-0169	Transverse module to hold: Lower section (1) Stokes basket and (2) backboards. Upper section to hold miscellaneous long handled tools.	$621
3130-0173	Stainless steel speedlay module. Includes area for (2) speedlays with center divider, lower storage compartments with push button latches and running boards.	$2,196
3130-0175	Raised crosswalk module. Includes walkway storage compartments with push button latches, running boards, (1) diamond plate walkway step w/gator grip each side and access handrails mounted on the pump module. Includes 8" raise with 5" high storage compartment with drop down diamond plate doors with push button latches.	$2,834
3130-0176	Upper TM pump module with double stacked double crosslays with backboard storage.	$3,531
3130-0177	Upper SM pump module with backboard storage and diamond plate storage pan. Backboard storage to be located rearward of storage pan. Deck gun channel to be located between pan and back board compartment.	$2,463
3130-0179	Speedlay module(stacked). Includes area for (2) stacked speedlays and (1) upper storage compartment, lower storage compartments with push button latches and running boards. Lower 1.75 speedlay and upper 2.5 speedlay. Single diamond plate cover for upper storage area. Includes (1) grab handle and (2) hold downs.	$3,705
3130-0180	Transverse Module (narrow). Locate forward of pump area. Includes a single compartment opening per side (with a shallow lower area and a transverse upper area with diamond plate flooring) and running boards. Upper area for single stacked triple crosslay.	$4,056
3130-0181	Pump/Speedlay Module. Includes area for runningboards, upper side stainless steel panels, (2) removable speedlay trays and upper dunage storage pan.	$11,756
3130-0182	Upper SM pump module with triple crosslays (single stacked depth) and diamond plate storage pan. Forward crosslays to be double stacked and rearward crosslay to be single stacked dry lay.	$4,739
3130-0184	Pump module top mount with speedlays. Includes 41" wide pump panel opening, dunnage pan and running boards. Raised top mount walkway includes storage compartments with D-Ring latches, (1) 5" diamond plate top mount walkway step with gator grip each side and access handrails mounted on the pump module. Raised walkway for backboard storage includes diamond plate door with push button latches. Includes area for (2) speedlays with 1.5" plumbing. Driver and Officer side upper pump access panels to be horizontally hinged with diamond plate doors. Includes (2) D-Ring latches and (2) gas shock hold opens for each.	$10,060
3130-0186	Upper TM pump module with double stacked single 2.5" crosslay. Includes area for dry crosslay storage rearward of 2.5".	$2,696
3130-0187	Upper SM pump module with triple single stacked crosslays and diamond plate storage pan. Each crosslay to be 6" wide for nozzle storage.	$2,126
3130-0188	Upper TM pump module with single stacked quad crosslays. Includes (3) dividers.	$2,052
3130-0189	Upper SM pump module with backboard storage and diamond plate storage pan. Backboard storage to be located forward of storage pan.	$2,463
3130-0190	Top Mount Pump Module. Includes area for single stacked double crosslay (notched divider) and TM walkway with folding steps with intergral lights and (2) vertical handrails.	$2,020
3130-0191	Top Mount Pump Module. Includes area for single stacked triple crosslay (notched dividers) and TM walkway with folding steps with integral lights and (2) vertical handrails.	$2,451
3130-0193	Side Mount Pump Module. Includes area for single stacked triple crosslay (notched dividers).	$436
3130-0194	Top Mount Pump Module. Includes area for a double speedlay and TM walkway with folding steps with integral lights and (2) vertical handrails.	$3,195
3130-0195	Top Mount Pump Module. Includes area for a double speedlay, single crosslay and TM walkway with folding steps with integral lights and (2) vertical handrails.	$3,626
3130-0196	Upper SM pump module with single stacked double crosslay, backboard storage and diamond plate storage pan. Backboard storage opening to be 6.5" wide.	$4,417
3130-0197	Upper SM pump module with double stacked double crosslay for 400' of 1.75" hose in each crosslay, backboard storage and diamond plate storage pan.	$5,034
3130-0198	Upper TM pump module with single stacked double crosslays. Each crosslay to hold 100' of 3" DJ.	$4,150
3130-0199	Upper SM pump module with single stacked triple crosslays and diamond plate storage pan. (2) Backboard and Ferno model 6 or EXL scoop stretcher storage box located below the storage pan with lift-up diamond plate door with thumb latches each side. Upper module to be full width as applicable to match lower module.	$5,585
3130-0200	Transverse Module (narrow). Locate forward of pump area. Includes a single compartment opening per side (with a shallow lower area and a transverse upper area with diamond plate flooring) and running boards. Upper area for single stacked quad crosslay. Plumbing to terminate thru outboard extrusion as follows: #1 driver side, #2 officer side, #3 driver side and #4 officer side.	$5,958
3130-0201	Upper SM pump module with 2.5" double stacked double crosslay and diamond plate storage pan. Both preconnects to be offset to officer side of module.	$5,213
3130-0202	Speedlay module(stacked). Includes area for (3) speedlays, lower storage compartments with push button latches and running boards.	$2,385
3130-0203	Transverse Module (narrow). Locate forward of pump area. Includes a single compartment opening per side (with a shallow lower area and a transverse upper area with diamond plate flooring) and upper area for triple stacked double crosslay with backboard storage.	$4,803
3130-0205	Upper TM pump module with backboard storage and diamond plate storage pan. Backboard storage located rearward of storage pan.	$2,151
3130-0206	Upper SM pump module with 2.5" double stacked double crosslays and diamond plate storage pan.	$4,653
3130-0207	Transverse Module (narrow). Locate forward of pump area. Includes a single compartment opening per side (with a shallow lower area and a transverse upper area with diamond plate flooring) and running boards. Upper area for double stacked double crosslay.	$4,674
3130-0208	Pump/Speedlay Module. Includes area for E-ONE supplied runningboards, (2) removable speedlay trays and upper diamond plate panels/doors for access to (2) horizontally stored backboards.	$12,209

3130-0209	Crosswalk module. Includes walkway storage compartments with D-ring latches, running boards, (1) folding step each side and access handrails mounted on the pump module.	$1,764
3130-0210	Speedlay module. Includes area for (2) speedlays with trays, (1) area for backboard storage with hinged doors with latches, lower storage compartments with D-ring latches and running boards. Speedlays to hold 250' of 1.75" DJ hose.	$3,498
3130-0211	Upper SM pump module with quad single stacked crosslays and diamond plate storage pan. Preconnects to located as follows: Preconnects 1 and 3 to be offset to officer side, Preconnects 2 and 4 to be offset to driver side. Crosslays to be 66" high from ground. Includes diamond plate access door on officer side of module with push button latches.	$4,121
3130-0212	Pump module. Includes 57" wide pump panel opening and running boards. Crosslays to be 66" high from ground.	$6,334
3130-0215	Transverse Module (full width). Locate forward of pump area. Includes a single compartment opening per side (with a shallow lower area and a transverse upper area with diamond plate flooring). Upper area for double stacked double crosslay.	$4,038
3130-0216	Upper SM pump module with double stacked triple crosslays and diamond plate storage pan.	$6,831
3130-0217	Speedlay module(stacked). Includes area for (3) 1.75" speedlays, lower storage compartments with push button latches and running boards. Upper speedlay to be dry lay.	$2,385
3130-0218	Upper TM pump module with 2.5" triple stacked single crosslay.	$4,338
3130-0219	Enclosed Pump Module with Triple Speedlays. Includes 45" wide pump panel opening. Includes area for (3) speedlays with trays, lower storage compartments with push button latches forward of pump panel opening. Upper module area to have storage pan.	$18,131
3130-0220	TM Upper module. Includes wide pan and open back style for special reel requirement.	$4,230
3130-0222	Upper TM pump module with single stacked double crosslays. Rearward crosslay to hold 2.5" DJ hose.	$2,231
3130-0224	Upper TM pump module with single stacked triple crosslays, dunnage storage pan and backboard storage. Storage pan located between T/M panel and backboard storage.	$3,998
3130-0225	Pump module. Includes 45" wide pump panel opening and running boards. Includes area forward of pump panel opening for (2) speedlays (stacked), lower storage compartments with push button latches.	$8,652
3130-0226	Upper SM pump module with double stacked double crosslay (single stack depth) and diamond plate storage pan. Built in compartment on officer side of module rearward of crosslays. Compartment dimensions to be approx. 18.5"W x 20"H x 20"D, includes stainless steel door with push button latches. Storage pan to be stepped around compartment. Crosslay divider to be adjustable side to side.	$4,285
3130-0227	Pump module. Includes lowered area for lowered upper module and 51" wide pump panel opening and running boards.	$6,373
3130-0228	Upper SM pump module with single stacked double crosslay, backboard storage and diamond plate storage pan. 2.5" plumbing for rear crosslay.	$3,161
3130-0229	Speedlay module. Includes area for triple speedlays with divider(s) and lower storage compartments with push button latches and running boards.	$3,315
3130-0231	Speedlay module. Includes area for triple speedlays with divider(s) and lower storage compartments with D-ring latches and running boards.	$2,361
3130-0232	Speedlay module(stacked). Includes area for (3) speedlays, lower storage compartments with push button latches and running boards.	$2,909
3130-0233	Speedlay module. Includes area for triple speedlays with divider(s) and lower storage compartments with push button latches and running boards. Forward speedlay to have 2.5" plumbing.	$2,417
3130-0236	Upper SM pump module with double stacked double crosslays and diamond plate storage pan. Storage pan to be open back style.	$4,849
3130-0238	Speedlay module. 48"H IPO 54.5"H so as not to block rear windows. Includes area for (2) speedlays with center divider, lower storage compartments with push button latches and running boards.	$3,339
3130-0239	Upper TM pump module with single stacked double crosslays and diamond plate storage pan.	$2,452
3130-0240	Pump module. Includes 51" wide pump panel opening and running boards. Includes modifications for 4x4 and plumbing applications as required.	$6,372
3130-0242	Speedlay module(stacked). Includes area for (2) stacked speedlays and (1) upper speedlay (crosslay style), lower storage compartments with push button latches and running boards. Lower speedlay, upper speedlay and crosslay. For use with removable or slide-master tray(s).	$2,974
3130-0246	Upper SM pump module with single stacked triple crosslay, backboard storage and diamond plate storage pan. Forward (2) crosslay to be 6" wide and the rearward crosslay to be 6.75" wide.	$4,616
3130-0247	Upper SM pump module with triple crosslays and diamond plate storage pan. Forward (2) crosslays to be single stack and rearward crosslay to be double stack.	$4,222
3130-0252	Upper SM pump module with double stacked single crosslay and diamond plate storage pan. Crosslay to be dry lay.	$3,176
3130-0254	Pump module. Includes 75" wide pump panel opening and running boards.	$5,096
3130-0255	Pump/Speedlay Module. Includes area for E-ONE supplied runningboards, (2) removable speedlay trays and upper diamond plate panels/doors for access to (2) horizontally stored backboards.	$5,919
3130-0259	Pump module. Includes 51" wide pump panel opening and running boards. Lowered to allow 70" high crosslay height from ground.	$6,212
3130-0262	Pump module. Includes 45" wide pump panel opening and running boards. Includes modifications for 4x4 and plumbing applications as required.	$6,372
3130-0264	Upper SM pump module with single stacked triple crosslays and diamond plate storage pan. Storage pan to be open back style.	$1,884
3130-0265	Transverse Module (narrow). Locate forward of pump area. Includes a single compartment opening per side (with a shallow lower area and a transverse upper area with diamond plate flooring) and running boards. Upper area for triple crosslay, forward (2) crosslays to be single stacked and rearward crosslay to be double stacked.	$4,926

3130-0266	Transverse Module (narrow). Locate forward of pump area. Includes a single compartment opening per side (with a shallow lower area and a transverse upper area with diamond plate flooring) and running boards. Upper area for double stacked double crosslay.	$4,674
3130-0271	Upper SM pump module with triple crosslays and diamond plate storage pan. Forward (2) crosslays to be single stack and rearward crosslay to be double stack. Crosslay plumbing to be located centered in place of outboard.	$4,222
3130-0273	Pump module. Includes 51" wide pump panel opening and running boards. Crosslays to be 73" high from ground.	$7,328
3130-0274	Upper SM pump module with double stacked (single stack depth) double crosslays and diamond plate storage pan. Front headboard stepped down 5" to allow 18" deep crosslays.	$3,000
3130-0276	Speedlay module. Includes area for triple speedlays with divider(s) and lower storage compartments with push button latches and running boards. Speedlay module tool compartments to be 20" high.	$2,975
3130-0277	Speedlay module. Includes area for (2) speedlays with trays, lower storage compartments with push button latches and running boards.	$1,980
3130-0278	Pump module. Includes 45" wide pump panel opening and running boards. Includes area forward of pump panel opening for (2) speedlays (stacked), lower storage compartments with push button latches	$7,537
3130-0280	Upper SM pump module with single stacked triple crosslay, backboard storage and diamond plate storage pan. Rearward crosslay to be double stacked for extra capacity.	$4,616
3130-0281	Stainless steel 46" wide lower pump module. Includes side running boards with Gator Grip.	$5,096
3130-0282	Stainless steel 46" wide lower pump module. Includes side running boards with Bustin Tread inserts.	$5,096
3130-0283	Stainless steel 50" wide lower pump module. Includes side running boards with Gator Grip.	$5,096
3130-0284	Stainless steel 50" wide lower pump module. Includes side running boards with Bustin Tread inserts.	$5,096
3130-0285	Stainless steel 54" wide lower pump module. Includes side running boards with Gator Grip.	$5,096
3130-0286	Stainless steel 54" wide lower pump module. Includes side running boards with Bustin Tread.	$5,096
3130-0287	Stainless steel 60" wide lower pump module. Includes side running boards with Gator Grip. This size required for most CAFS units.	$5,096
3130-0288	Stainless steel 60" wide lower pump module. Includes side running boards with Bustin Tread. This size required for most CAFS units.	$5,096
3130-0289	Upper SM stainless steel pump module with single stacked double crosslays and top open storage with treadplate flooring.	$1,502
3130-0290	Upper SM stainless steel pump module with double stacked double crosslays and top open storage with treadplate flooring.	$1,502
3130-0291	Upper SM stainless steel pump module with single stacked triple crosslays and top open storage with treadplate flooring.	$1,884
3130-0292	Upper SM stainless steel pump module with double stacked triple crosslays and top open storage with treadplate flooring.	$1,884
3130-0293	Upper SM stainless steel pump module with single stacked double crosslays and a backboard with top open storage with treadplate flooring.	$2,560
3130-0294	Upper SM stainless steel pump module with double stacked double crosslays and a backboard plus top open storage with treadplate flooring.	$2,560
3130-0295	Upper SM stainless steel pump module with single stacked triple crosslays and a backboard with top open storage with treadplate flooring.	$2,942
3130-0296	Upper SM stainless steel pump module with double stacked triple crosslays and a backboard with top open storage with treadplate flooring.	$2,942
3130-0297	Upper SM stainless steel pump module without crosslays. Top open storage only with treadplate flooring. For use with crosslays mounted on top of a front of pump transverse storage module, or with preconnects in the main hose bed, or as otherwise specified.	$1,631
3130-0298	Upper TM stainless steel pump module with single stacked double crosslays and top open storage with treadplate flooring.	$1,676
3130-0300	Upper TM stainless steel pump module without crosslays. Top open storage only with treadplate flooring. For use with various preconnected discharge options.	$1,757
3130-0301	Speedlay module. Includes area for (2) speedlays, (1) area for backboard storage with hinged doors with latches, stainless steel lower storage compartments with push-button latches and running boards.	$2,777
3130-0302	Speedlay module. Includes area for (3) speedlays, stainless steel lower storage compartments with push-button latches and running boards.	$2,139
3130-0303	Speedlay module. Includes area for (2) 1-3/4" speedlays with a sliding tray and center divider, stainless steel lower storage compartments with push-button latches and running boards.	$1,757
3130-0304	Speedlay module. Includes area for (2) speedlays with dividers, (1) area for backboard storage with hinged doors with latches, stainless steel lower storage compartments with push button latches and running boards.	$2,777
3130-0305	Speedlay module. Includes area for triple speedlays with dividers and stainless steel lower storage compartments with push-button latches and running boards.	$2,139
3130-0306	Transverse Module (narrow). Located forward of pump area. Includes a single stainless steel compartment opening per side (with a shallow lower area and a transverse upper area with SS flooring) and running boards with Gator Grip.	$2,246
3130-0307	Transverse module (20" wide) with brushed stainless steel doors. Located forward of pump area and welded integral. Includes a single stainless steel compartment opening per side (with a shallow lower area and a transverse upper area) and side running boards with Bustin Tread.	$2,246
3130-0308	Crosswalk module. Includes stainless steel walkway storage compartments with lift-up access lids and butterfly latches, non-skid running boards with Bustin Tread, and access hand rails mounted one each side to the front of the pump enclosure assembly.	$1,465

3130-0309	Speedlay module (stacked). Module to be full width. Includes area for (2) stacked speedlays and (1) upper speedlay (crosslay style), lower storage compartments with push button latches and running boards. Lower speedlay, upper speedlay and crosslay. For use with removable or slide-master tray(s).	$4,313
3130-0310	Upper SM pump module with diamond plate storage pan (only). Upper module to be full width as applicable to match lower module.	$2,970
3130-0311	Speedlay module(stacked). Includes area for (2) stacked speedlays, lower storage compartments with push button latches and running boards. For use with removable or slide-master tray(s).	$2,361
3130-0313	Pump module. Includes 51" wide pump panel opening and running boards. Crosslays to be 66" high from ground.	$6,334
3130-0314	Pump module. Includes 39" wide pump panel opening and running boards. Includes area forward of pump panel opening for (2) speedlays (stacked), lower storage compartments with push button latches.	$8,652
3130-0315	Pump module. Includes 57" wide pump panel opening and running boards. Includes modifications for 4x4 and plumbing applications as required.	$6,372
3130-0318	Upper SM pump module with double stacked (single stacked depth) double crosslays and diamond plate storage pan.	$1,884
3130-0319	Upper SM pump module with triple crosslays (single stacked depth) and diamond plate storage pan. Forward crosslays to be double stacked and rearward crosslay to be single stacked dry lay.	$2,542
3130-0320	Pump module. Includes 45" wide pump panel opening and running boards. Lowered to allow 70" high crosslay height from ground.	$6,212
3130-0321	Pump module. Includes 51" wide pump panel opening and running boards. Includes area forward of pump panel opening for (2) speedlays (stacked), lower storage compartments with push button latches. For use with removable or slide-master tray(s).	$8,876
3130-0322	Pump module. Includes 33" wide pump panel opening and running boards.	$5,096
3130-0323	Pump module. Includes 39" wide pump panel opening and running boards. Includes modifications for 4x4 and plumbing applications as required.	$6,372
3130-0324	Crosswalk module. Includes running boards, (1) folding step each side and access handrails mounted on the pump module. Includes modifications for 4x4 and plumbing applications as required.	$1,256
3130-0326	Top Mount Pump Module. Includes area for single stacked double crosslay (notched divider) and TM walkway with dual lighted LED folding steps with intergral lights and (2) vertical handrails.	$2,020
3130-0327	Top Mount Pump Module. Includes area for single stacked triple crosslay (notched dividers) and TM walkway with dual lighted LED folding steps with integral lights and (2) vertical handrails.	$2,451
3130-0328	Top Mount Pump Module. Includes area for a double speedlay and TM walkway with dual lighted LED folding steps with integral lights and (2) vertical handrails.	$3,195
3130-0329	Top Mount Pump Module. Includes area for a double speedlay, single crosslay and TM walkway with dual lighted LED folding steps with integral lights and (2) vertical handrails.	$3,626
3130-0330	Crosswalk module. Includes running boards, (1) dual lighted LED folding step each side and access handrails mounted on the pump module.	$1,004
3130-0331	Crosswalk module. Includes walkway storage compartments with push button latches, running boards, (1) dual lighted LED folding step each side and access handrails mounted on the pump module.	$1,465
3130-0332	Speedlay module(stacked). Includes area for (2) stacked speedlays and (1) upper speedlay (crosslay style, plumbing to be offset to driver side), lower storage compartments with push button latches and running boards. Lower speedlay, upper speedlay and crosslay. For use with removable or slide-master tray(s).	$2,974
3130-0333	Upper SM pump module with bolt-on top. Includes bracing below bolt-on top for light tower mounting. Vertically hinged stainless steel panels with push button latches on each side of the module.	$1,631
3130-0362	Crosswalk module.Includes running boards, (1) dual lighted LED folding step each side and access handrails mounted on the pump module. Diamond plate walkway plate to be 20" wide due to 2-door Freightliner DEF tank.	$1,004
3130-0363	Crosswalk module. Includes walkway storage compartments with push button latches, running boards, (1) dual lighted LED folding step each side and access handrails mounted on the pump module. Diamond plate walkway plate to be 20" wide due to 2-door Freightliner DEF tank.	$1,465
3130-0364	Special Top Mount Pump Module. Includes area for a double speedlay and TM walkway with dual lighted LED folding steps with integral lights and (2) vertical handrails. Extend-a-gun piping located in the dunnage pan offset to officer side.	$4,312
3130-0365	Upper top mount triple speedlays and storage in remaining area.	$2,792
3130-0366	Speedlay module full width wtih stokes basket and backboard storage. Includes area for (2) speedlays, lower storage compartments with push button latches. Upper area of module to hold (1) stokes basket and (2) backboards. Includes vertically hinged smooth plate door(s) with push button latches.	$4,492
3130-0367	Upper SM pump module with 2.5" double stacked single crosslay and diamond plate storage pan. 300' of 2.5" DJ	$1,884
3130-0368	Pump module. Includes 51" wide pump panel opening and running boards. Upper SM pump module with single stacked double crosslays with diamond plate storage pan. Crosslays to be 68" high from ground.	$6,926
3130-0376	Upper SM pump module with triple crosslays and diamond plate storage pan. Forward (2) crosslays to be single stack and rearward crosslay to be double stack.	$2,355
3130-0377	Upper SM pump module with single stacked triple crosslays and diamond plate storage pan. Rearward crosslay to be double stacked dry lay.	$3,000
3130-0378	Pump module. Includes 33" wide pump panel opening and running boards. Includes modifications for front headboard due to special exhaust routing.	$6,372
3130-0379	Pump module. Includes 51" wide pump panel opening and running boards. Running boards to include gator grip and be painted black duraback.	$5,674

3130-0380	Raised crosswalk module. Includes walkway storage compartments with push button latches, running boards, (1) smooth plate walkway step w/gator grip each side and access handrails mounted on the pump module. Includes 8" raise with 5" high storage compartment with drop down aluminum smooth plate doors with push button latches. T/M walkway and walkway access steps to be smooth plate gator grip to be painted black durabak. All access doors on module to be painted gray zolatone.	$3,512
3130-0382	Pump module. Includes 51" wide pump panel opening and running boards. Includes area forward of pump panel opening for (2) speedlays (stacked), lower storage compartments with push button latches.	$8,652
3130-0383	Pump module. Includes 57" wide pump panel opening and running boards. Crosslays to be 70" high from ground.	$6,334
3130-0384	Upper SM pump module with backboard storage and diamond plate storage pan. Backboard storage to be located rearward of storage pan.	$2,463
3130-0385	Pump module. Includes 45" wide pump panel opening and running boards. Includes area forward of pump panel opening for (3) speedlays (stacked), lower storage compartments with push button latches.	$9,215
3130-0386	Pump module. Includes 69" wide pump panel opening and running boards.	$5,096
3130-0387	Enclosed Pump Module. Includes 51" pump panel opening. Driver side to have pump operator's panel. Officer side to include area for NFPA pump access. Upper area of pump module to have diamond plate storage pan.	$10,576
3130-0388	Crosswalk module with running boards. Includes upper walkway storage compartments with embossed diamond plate lift-up walkway lids (includes gas shock(s) as required to hold the lids at 90 degrees with butterfly style latch(es) for securing in the closed position). Compartments to be large as possible and include (1) light each (match body compartments for brand and type of light)and door ajar indicator wiring. Outboard sides of walkway to have diamond plate panels and each includes (1) intermediate style step and access handrails mounted on the pump module.	$2,312
3130-0389	Pump module. Includes 57" wide pump panel opening and running boards. Includes area forward of pump panel opening for (3) speedlays (stacked), lower storage compartments with push button latches. For use with removable tray(s).	$8,099
3130-0390	Upper SM pump module with triple crosslays and diamond plate storage pan. Forward (2) crosslays to be single stack and rearward crosslay to be double stack.	$4,222
3130-0391	Upper TM pump module with single stacked triple crosslays. Forward (2) crosslays to be single stack and rearward crosslay to be double stack.	$2,355
3130-0392	Upper TM pump module with single stacked double crosslays and backboard storage. Crosslays to be 6" wide each.	$2,975
3130-0393	Pump module. Includes 45" wide pump panel opening and running boards. Lowered to allow 72" high crosslay height from ground.	$5,096
3130-0394	Pump module. Includes 39" wide pump panel opening and running boards. Includes area forward of pump panel opening for (2) speedlays (stacked), lower storage compartments with push button latches. For use with removable or slide-master tray(s).	$8,876
3130-0395	Upper TM pump module with double stacked double crosslays with backboard storage.	$2,727
3130-0396	Upper SM pump module with double stacked (single stack depth) double crosslays and diamond plate storage pan.	$2,266
3130-0397	Upper SM stainless steel pump module with single stacked triple crosslays and top open storage with treadplate flooring. Crosslay 1 to be a dead lay.	$1,884
3130-0398	Pump module. Includes 45" wide pump panel opening and running boards. Includes area forward of pump panel opening for (2) speedlays (stacked), lower storage compartments with push button latches. For use with removable or slide-master tray(s).	$8,876
3130-0399	Pump module for top mount enclosed operation. Includes 51" panel opening, area for double stacked double speedlay with trays stacked side by side, lower storage compartments with push button latches and running boards. Speedlay floor to be slotted for draining. Includes backboard storage for (3) backboards. Includes deck gun channel and open back storage pan.	$13,112
3130-0400	Pump module. Includes 51" wide pump panel opening and running boards. Lowered to allow 72" high crosslay height from ground.	$5,606
3130-0403	Upper SM pump module with single stacked triple crosslays and transverse storage area rearward of deckgun channel with stainless steel lift-up door with push button latches on driver side.	$2,707
3130-0404	Raised crosswalk module with forward headboard. Includes running boards, (1) dual lighted LED folding step each side and access handrails mounted on the pump module.	$1,449
3130-0405	Pump module with stepped headboard. Includes 45" wide pump panel opening and running boards.	$5,452
3130-0407	Pump module, base, single crosslay, stainless, Wildland	$8,748
3130-0408	Pump module, Option, Double crosslays, stainless, Wildland	$8,978
3130-0409	Pump module. Includes 31" wide pump panel opening and running boards.	$5,096
3130-0413	Upper SM pump module with single stacked triple crosslays, deck gun channel and transverse storage area. Transverse storage area to be rearward of the deck gun channel. Includes vertically hinged diamond plate doors with butterfly latches, doors to be hinged rearward.	$3,301
3130-0414	Enclosed Pump Module with Triple Speedlays. Includes 51" wide pump panel opening. Includes area for (3) speedlays with trays, lower storage compartments with push button latches forward of pump panel opening. Upper module area to have storage pan.	$18,131
3130-0415	Upper SM pump module with single stacked triple crosslays and diamond plate storage pan. Each crosslay to be 4.75" wide.	$1,884
3130-0416	Crosswalk module. Includes running boards, (1) dual lighted LED folding step each side and access handrails mounted on the pump module. Includes modifications for 4x4 and plumbing applications as required.	$1,204
3130-0418	Pump module with stepped headboard. Includes 51" wide pump panel opening and running boards.	$5,452

3130-0419	Pump module. Includes 39" wide pump panel opening and running boards. Includes modifications for front headboard due to special exhaust routing.	$6,372
3130-0420	Upper SM pump module with double stacked triple crosslays and diamond plate storage pan. Crosslay plumbing to be located as far outboard as possible.	$2,053
3130-0422	Pump module. Includes 45" wide pump panel opening and running boards. Includes area forward of pump panel opening for (3) speedlays (stacked), lower storage compartments with push button latches. For use with removable tray(s).	$9,215
3130-0424	Upper SM pump module with single stacked double crosslays and diamond plate open back storage pan.	$1,502
3130-0426	Upper TM pump module with diamond plate open back storage pan.	$1,980
3130-0427	Upper SM pump module with backboard storage and diamond plate storage pan. Backboard storage to be located forward of storage pan. Backboard storage to be 12" wide and includes divider 4" off forward wall to create two storage spaces.	$2,763
3130-0428	Upper TM pump module with storage area with horizontally hinged access door (wired to door ajar) with push button latches, one each side.	$2,692
3130-0430	Pump module. Includes 39" wide pump panel opening and running boards. Upper SM pump module with double stacked double crosslays. Crosslays to be 66" high from ground.	$7,189
3130-0431	Pump module. Includes 45" wide pump panel opening and running boards. Upper SM pump module with double stacked double crosslays with diamond plate storage pan. Crosslays to be 66" high from ground.	$6,926
3130-0436	Upper SM pump module with single stacked double crosslays and transverse storage area rearward of deckgun channel with aluminum Zolatone lift-up door with push button latches on officer side.	$2,481
3130-0437	Upper SM pump module with single stacked triple crosslays and diamond plate open back storage pan. Duunage pan to be 17.75" deep on driver side due to booster reel height.	$2,440
3130-0438	Speedlay module full width wtih stokes basket and backboard storage. Includes area for (3) speedlays: (1) 2.5" in lower speedlay and (2) 1.5" in upper speedlay, lower storage compartments with push button latches. Upper area of module to hold (1) stokes basket and (2) backboards. Includes vertical hinged smooth plate door(s) with push button latches.	$4,430
3130-0439	Stainless steel 62" wide lower pump module. Includes side running boards with Bustin Tread. This size required for most CAFS units.	$5,206
3130-0440	Upper SM pump module with single stacked triple crosslay, backboard storage and diamond plate storage pan. Rearward crosslays to be double stacked. Crosslays to be 28" deep.	$4,108
3130-0441	Upper TM pump module with double stacked double crosslays. Crosslays to hold 300' of 2.5" DJ hose.	$1,991
3130-0442	Upper SM pump module with single stacked triple crosslays and diamond plate storage pan. Rearward crosslay to hold 150' of 3" DJ hose.	$2,025
3130-0443	Pump module. Includes 51" wide pump panel opening and running boards. Includes area forward of pump panel opening for (2) speedlays (stacked), lower storage compartments with push button latches. Includes modifications for 4x4 and plumbing applications as required.	$9,190
3130-0444	Crosswalk module. Includes walkway storage compartments with push button latches, running boards, (1) dual lighted LED folding step each side and access handrails mounted on the pump module. Includes modifications for 4x4 and plumbing applications as required.	$1,813
3130-0445	Pump module. Includes 39" wide pump panel opening and running boards. Upper SM pump module with single stacked double crosslays and open back storage pan.	$6,906
3130-0447	Pump module. Includes 39" wide pump panel opening and running boards. Includes area forward of pump panel opening for (3) speedlays (stacked), lower storage compartments with push button latches.	$8,538
3130-0449	Top mount eMAX pump module. Includes area for a double speedlay, TM walkway (raised) with compartments, dia plt running boards, folding steps with integral lights and (2) vertical handrails.	$5,523
3130-0450	Pump module top mount with speedlays. Includes 45" wide pump panel opening, dunnage pan and running boards. Top mount walkway includes storage compartments with push button latches, (1) 5" diamond plate top mount walkway step with gator grip each side and access handrails mounted on the pump module. Includes area for (3) speedlays - (2) with 1.5" plumbing and (1) with 2.5" plumbing. The front area of the speedlays to have a removable diamond plate panel with D-ring latches.	$11,235
3130-0451	Pump module. Includes 57" wide pump panel opening and running boards. Upper SM pump module with single stacked triple crosslays, backboard storage and diamond plate storage pan. Crosslays to be 65" high from ground.	$9,612
3130-0452	Speedlay module. Includes area for (2) speedlays with dividers, (1) area for backboard storage with hinged doors with latches, lower storage compartments with D-ring latches and running boards. Speedlays to hold 250' of 1.75 each.	$3,498
3130-0453	Crosswalk module. Includes walkway storage compartments with D-ring latches, running boards, (1) dual lighted LED folding step each side and access handrails mounted on the pump module.	$1,465
3130-0454	Upper SM pump module with double stacked double crosslays and diamond plate storage pan. Crosslay divider to be adjustable side to side.	$1,864
3130-0455	Pump module. Includes 51" wide pump panel opening and running boards. (Tradition style pump module see body layout). Includes area forward of pump panel opening for (2) speedlays (stacked), lower storage compartments with push button latches.	$8,651
3130-0456	Upper TM pump module with double stacked single crosslay and backboard storage.	$2,696
3130-0457	Upper SM pump module with single stacked double crosslay, backboard storage and diamond plate open back storage pan.	$2,889
3130-0458	Upper stainless steel pump module with single stacked quad crosslays and top open storage with treadplate flooring. Crosslay floors lowered to approximately 72" above ground.	$2,942
3130-0460	Upper SM pump module with single stacked double crosslay, backboard storage forward of crosslays and diamond plate open back storage pan.	$2,560

3130-0462	Upper TM pump module with single stacked quad crosslays and backboard storage. Crosslay preconnects to be offset to driver side of module.	$3,749
3130-0464	Upper SM stainless steel pump module with double stacked double crosslays for 1-1/2" DJ hose and top open storage with treadplate flooring. Width of each of the crosslay beds must be 6-1/2".	$1,502
3130-0465	Upper SM pump module with quad single stacked crosslays and diamond plate storage pan. The rear crosslay is for dry hose storage. The (3) forward crosslays to be 5.5" wide and the rearward crosslay to be 6" wide.	$2,493
3130-0467	Side Mount Pump Module. Includes area for double stacked double crosslay (notched dividers). Crosslay opening to be same as standard tradition triple crosslay design.	$982
3130-0468	Upper SM pump module with double stacked single crosslay and diamond plate storage pan. 400' of 1.75" DJ	$1,884
3130-0469	Upper SM pump module with quad single stacked crosslays and diamond plate storage pan. Rearward (2) crosslays to be 3" DJ dry lays.	$2,266
3130-0470	Pump module top mount with single stack double crosslay, double speedlay (9" wide) and diamond plate storage pan. Includes 45" wide pump panel opening and running boards. Top mount walkway storage compartments with push button latches, (1) 5" diamond plate top mount walkway step with gator grip each side and access handrails mounted on the pump module. Deck gun to be located in channel centered in storage pan running front to back. Embossed diamond plate covers with D-ring latches (wired to door ajar switch) each side of deck gun channel, covers to be reinforced and hinged to front.	$12,124
3130-0472	Upper SM pump module with single stacked triple crosslay, backboard storage and diamond plate storage pan. Rearward crosslay to be for 2.5" dry lay. Stoage pan to be open back style due to generator.	$4,108
3130-0473	Vertical speedlay module welded integral to front of pump enclosure. Includes 12" wide area for (2) speedlays.	$2,233
3130-0474	Top mount eMAX pump module. Includes area for a double speedlay, TM walkway (raised) with compartments, dia plt running boards, fixed walkway steps and (2) vertical handrails.	$5,523
3130-0475	Upper TM pump module with triple stacked double crosslays.	$1,676
3130-0476	Top mount SS eMAX pump module. Includes area for double speedlays, TM walkway with compartments, treadplate running boards with Bustin Tread inserts and (2) vertical hand rails.	$6,237
3130-0477	Triple Speedlays with Enclosed Pump Panel Full Width Module. Includes 45" wide pump panel opening. Includes area for (3) speedlays and lower storage compartments with push button latches forward of pump panel opening. Backboard/stokes basket storage above the speedlays. Upper module area above the pump panel to have storage pan.	$18,814
3130-0480	Upper SM pump module with single stacked double crosslay, New York Hook storage with horizontal divider 8" off floor and diamond plate open back storage pan.	$2,889
3130-0481	Pump module. Includes 51" wide pump panel opening and running boards. Upper SM pump module with single stacked triple crosslays, backboard storage and diamond plate storage pan. Crosslays to be 72" high from ground.	$8,609
3130-0483	Transverse Module (narrow). Locate forward of pump area. Includes a single compartment opening per side (with a shallow lower area and a transverse upper area with diamond plate flooring) and running boards. Upper area for triple crosslay, forward (2) crosslays to be single stacked for 200' of 1.75 DJ hose per lay and rearward crosslay to be single stacked for 150-200' of 2.50" DJ hose.	$4,708
3130-0484	Upper SM pump module with backboard storage and diamond plate storage pan. Backboard storage to be located forward of storage pan. Deck gun piping to be located forward center area of pan and just rearward of back board compartment.	$2,463
3130-0486	Upper TM pump module with smooth plate storage pan. Side panels to be Zolatone gray. Storage pan to be painted black durabak.	$2,181
3130-0487	Pump module. Includes 57" wide pump panel opening and running boards. Running boards to be painted black durabak.	$5,441
3130-0488	Painted crosswalk area to includes all smooth plate and extrusion surfaces exposed to exterior in the crosswalk area (speedlay and pump module) to be painted job color. Does not include top facing exposed surfaces.	$2,533
3130-0489	Crosswalk module. Includes walkway storage compartments with push button latches, running boards, (1) dual lighted LED folding step each side and access handrails mounted on the pump module. Compartment doors to be painted job color. Crosswalk and running boards to be painted durabak black.	$1,961
3130-0491	Upper SM stainless steel pump module with single stacked triple crosslays and top open storage with treadplate flooring. Capacities of 300', 200' and 200' of hose for selected discharges.	$2,102
3130-0492	Pump module. Includes 45" wide pump panel opening and running boards. Upper SM pump module with single stacked double crosslays with diamond plate storage pan. Crosslays to be 72" high from ground.	$6,926
3130-0493	Speedlay module full width with stokes basket and backboard storage. Includes area for (2) speedlays: (2) 1.5" side by side speedlay storage compartments. Upper area of module shall have (2) adjustable dividers to hold (1) stokes basket and (2) backboards. Includes vertically hinged smooth plate door(s) with push button latches.	$4,430
3130-0494	Upper TM pump module with a transverse storage compartment with aluminum tread plate vertical hinged doors (1) each end of the compartment and a embossed tread plate top.	$2,132
3130-0495	Enclosed Pump Module with Double Speedlays. Includes 47.5" wide pump panel opening. Includes area for (2) stacked speedlays, lower storage compartments with push button latches forward of pump panel opening. Upper module area to have storage pan.	$18,466
3130-0496	Upper SM pump module. Crosslay area to be: (2) compts 4.5" at base, (1) compt 4.75" at base and (1) compt 7.5" at base. Ensure that each crosslay is wide enough to accommodate the nozzles so they are easily deployed for each side. Backboard storage and diamond plate storage pan. Crosslays to be 28" deep.	$4,464

3130-0497	Upper TM pump module with modified sides for improved visibility and diamond plate storage pan.	$2,291
3130-0499	Upper stainless steel pump module with single stacked quad crosslays and top open storage with treadplate flooring. Crosslay floors located approximately 75" above ground. Top mount pump module only.	$2,942
3130-0500	Upper SM pump module with forward (2) crosslays to be single stack and rearward crosslay to be double stack includes diamond plate storage pan.	$4,222
3130-0501	Upper SM pump module with single stacked quad crosslays and diamond plate storage pan. Crosslays to be 28" deep due to additional capacity.	$2,709
3130-0503	Crosswalk module. Includes running boards, (1) intermediate style step each side and access handrails mounted on the pump module. Crosswalk, intermediate steps and running boards to be 3/16" aluminum treadplate plate.	$1,296
3130-0504	Speedlay module. Includes area for (2) speedlays 15" front to rear with center divider curt to a height of 24", lower storage compartments with push button latches and running boards.	$2,347
3130-0505	Pump module top mount with speedlays. Includes 45" wide pump panel opening, dunnage pan and running boards. Top mount walkway includes storage compartments with push button latches, (1) 10" diamond plate top mount walkway step with gator grip each side and access handrails mounted on the pump module. Includes area for (3) speedlays - (2) with 1.5" plumbing and (1) with 2.5" plumbing. The front area of the speedlays to have a removable diamond plate panel with D-ring latches.	$11,767
3130-0506	Pump module. Includes 63" wide pump panel opening and running boards. Upper SM pump module with double stacked double crosslays with diamond plate storage pan. The hose to be in three (3) poly trays of 200' each. The module to be stepped up rearward of the crosslays.	$6,926
3130-0507	Crosswalk module. Includes walkway storage compartments with push button latches, running boards, (1) dual lighted LED folding step each side and access handrails mounted on the pump module. The crosswalk shall be raised to accommodate storage of (2) backboards.	$1,625
3130-0510	Pump module top mount with speedlays. Includes 51" wide pump panel opening and running boards. Includes area forward of pump panel opening for (2) speedlays (stacked). Includes crosswalk module and walkway storage compartments with push button latches, (1) dual lighted LED folding step each side and access handrails mounted on the pump module.	$10,873
3130-0511	Pump module. Includes 39" wide pump panel opening with integral double speedlays and running boards. Upper SM pump module with double stacked single crosslay and diamond plate storage pan.	$11,055
3130-0512	Enclosed triple vertically stacked speedlays with trays, 14" wide, capacities to be for the selected size preconnect discharges. Speedlay assembly welded integral to the front of SS pump enclosure. For use with enclosed side pump panels with special WB dimension added to create space for door openings. (Actual WB dimension for this application is 22".)	$2,454
3130-0513	Transverse full width module (24" wide) with full height doors. Located behind cab, and stands alone. Includes a single compartment opening per side (with approximately 27" deep lower area and a transverse upper area).	$4,160
3130-0514	Upper SM pump module with single stacked triple crosslays and transverse storage area rearward of deckgun channel with stainless steel lift-up doors with push button latches. (1) On driver and (1) on officer side.	$2,841
3130-0515	Pump module top mount with speedlays. Includes 45" wide pump panel opening, dunnage pan and running boards. The crosswalk shall be raised 3". The area directly below the crosswalk walkway shall include five (5) compartments, one (1) each side for storage in the lower area and a horizontal storage directly under the walkway surface with three (3) compartments.	$11,927
3130-0518	Crosswalk module. Includes walkway storage compartments with D-ring latches, running boards, (1) dual lighted LED folding step each side and access handrails mounted on the pump module.	$1,465
3130-0520	Upper SM pump module with double stacked double crosslays and transverse storage area. Transverse storage area to be rearward crosslays. Includes horizontally hinged diamond plate doors with thumb latches, doors to be hinged at top. Each crosslay to accommodate (1) removable poly tray (removable tray(s) sold separately).	$3,301
3130-0522	Upper SM pump module with double stacked triple crosslay, deck gun channel and backboard storage. The rear crosslay is for dry hose storage.	$2,641
3130-0523	Side mount pump module. Extruded aluminum with runningboards.	$5,096
3130-0524	Top mount pump module with 20" walkway. Extruded aluminum with runningboards.	$6,072
3130-0525	Top mount pump module with walkway and integral double speedlays (9" W). Extruded aluminum with runningboards. Includes formed walkway access steps.	$7,525
3130-0526	Top mount pump module with walkway and integral triple speedlays (13" W). Extruded aluminum with runningboards. Includes formed walkway access steps.	$7,995
3130-0528	Upper SM pump module with single stacked triple crosslays and diamond plate storage pan. Crosslay 3 to be a dead lay.	$1,884
3130-0529	Enclosed Pump Module with Double Speedlays. Includes 40.5" wide pump panel opening. Includes area for (2) stacked speedlays, lower storage compartments with D-handle latches forward of pump panel opening. Upper module area to have storage pan.	$18,466
3130-0530	A side mount pump module with triple crosslays. The module shall have overall dimensions of 70"H x 72"W (not including runningboards) x 49"L (front to rear).	$7,449
3130-0542	Speedlay module. Includes area for (2) speedlays with divider forward, (1) area for four (4) pike pole storage tubes to accommodate 6' pike poles in rearward lower area of module staggered two tubes on forward compartment wall and two tubes on rearward compartment wall. Upper area of rearward storage area over the pike poles there shall be a shovel storage compartment in remaining space which is open to the top of module when lid on top is opened. There shall be a bolt in divider between the pike pole storage and the upper shovel area. There shall be a hinged door on officer side only of rearward upper pike and shovel storage area with 2 push button latches, lower storage compartments with push button latches and running boards. All storage doors shall be wired to door ajar circuit in accordance with NFPA.	$3,697

3130-0543	Upper SM pump module with 2.5" double stacked single crosslay and diamond plate storage pan. 250' of 2.50" DJ	$1,884
3130-0544	Triple vertically stacked speedlays for top console 12" wide (no trays), capacities to be for the selected size preconnect discharges. Speedlay assembly welded integral to the front of SS pump enclosure. Bustin Tread in side running boards of speedlay area.	$2,345
3130-0545	Upper SM pump module with single stacked triple crosslay, backboard storage and diamond plate storage pan.	$3,049
3130-0554	Pump module. Includes 39" wide pump panel opening and running boards. Upper SM pump module with double stacked double crosslays and transverse storage area. Transverse storage area to be rearward crosslays. Includes horizontally hinged diamond plate doors with push button latches. Each crosslay to accommodate (1) removable poly tray (trays not included).	$8,396
3130-0555	Pump module. Includes 41" wide pump panel opening and running boards. Upper SM pump module with diamond plate storage pan and forward transverse compartment with double stacked double crosslays. Crosslays to be 12" wide and 15" deep.	$11,827
3130-0557	Stainless steel 70" wide lower pump module. Includes side running boards with Bustin Tread. This size is used for some big Industrial type foam systems.	$5,096
3130-0558	Upper SM pump module with double stacked triple crosslays.	$1,584
3130-0560	Pump module. Includes 45" wide pump panel opening and running boards. Includes area forward of pump panel opening for (2) stacked speedlays and (1) upper speedlay (crosslay style), lower storage compartments with push button latches.	$10,924
3130-0561	Upper TM pump module with single stacked single crosslay and backboard storage.	$3,775
3130-0562	Crosswalk module. Includes running boards. The crosswalk shall be raised 8". (1) Dual lighted LED folding step each side and access handrails mounted on the pump module.	$1,170
3130-0563	Top mount eMAX pump module for use with a (2) arm ladder rack. Includes area for a double speedlay, TM walkway (raised) 21" front to rear without compartments, dia plt running boards, folding steps with integral lights and (2) vertical handrails.	$5,523
3130-0565	Upper SM pump module with triple crosslays and diamond plate storage pan. Forward (2) crosslays to be single stack and rearward crosslay to be double stack.	$2,150
3130-0566	Speedlay module. Includes area for (2) speedlays, (1) area for backboard storage and Little Giant ladder with hinged doors with latches, lower storage compartments with push button latches and running boards.	$2,941
3130-0568	Pump module. Includes 45" wide pump panel opening and running boards. Upper SM pump module with double stacked triple crosslays with diamond plate storage pan.	$6,926
3130-0569	Upper TM pump module with 2.5" single stacked single crosslay.	$1,808
3130-0570	eMAX Tanker Pump module. Includes enclosed pump panel, compt on officer side (opposite pump panel), lower and upper storage areas, center front pump access doors, removable center floor in upper area, storage pan. Lower storage area to hold (1) tray for 200' of 1.75" DJ preconnected hose and (1) tray for 200' of 2.5" DJ preconnected hose. Upper storage area to hold (1) tray for 200' of 1.75" DJ preconnected hose offset to rear and storage area for (2) backboards vertically stored offset forward w/sleeve each side of center pump access.	$8,580
3130-0571	Upper TM pump module with double stacked single crosslay and pike pole storage.	$2,696
3130-0572	Top mount pump module with 19" walkway. Extruded aluminum with runningboards.	$6,072
3130-0573	Transverse module (18" wide) with brushed stainless steel doors. Located forward of pump area and welded integral. Includes a single stainless steel compartment opening per side (with a shallow lower area and a transverse upper area) and side running boards with Bustin Tread.	$2,400
3130-0574	Transverse Module (narrow) 24.5. Locate forward of pump area. Includes a single compartment opening per side (with a shallow lower area and a transverse upper area with diamond plate flooring) and running boards.	$2,372
3130-0575	Transverse Module (full width). Locate forward of pump area. Includes a single compartment opening per side (with a shallow lower area and a transverse upper area with diamond plate flooring). Upper area for double stacked double crosslay.	$4,038
3130-0577	Upper TM pump module with double crosslays. Forward crosslay to be double stacked and rearward crosslay to be dry lay for storage to include (2) pike pole tubes for 6' pike poles located on the rearward wall.	$2,671
3130-0578	Speedlay module. Includes a lower double preconnect storage area, upper preconnect storage area, sleeve in upper storage area for (2) backboards (vertically stored offset forward) lower storage compartments with push button latches and running boards.	$3,414
3130-0579	Pump module. Includes 51" wide pump panel opening and running boards. Upper SM pump module with (4) single stacked single crosslays with diamond plate storage pan. Crosslays to be 66" high from ground.	$6,926
3130-0580	Top mount eMAX pump module. Includes area for a double speedlay, TM walkway (raised) with compartments with embossed diamond plate lift-up walkway lids (includes gas shock(s) as required to hold the lids open with butterfly style latch(es) for securing in the closed position). Comparments to be large as possible and include (1) light (match body compartmnets for brand and type of light) door ajar indicator wiring. Outboard sides of walkway to have diamond plate panels. Dia plt running boards, Gator Grip fixed walkway steps and (2) vertical handrails.	$6,372
3130-0581	Upper SM pump module with double stacked double crosslay, backboard storage and diamond plate storage pan.	$2,714
3130-0582	Speedlay module. Includes area for (2) speedlays with center divider, lower storage compartments with push button latches and running boards.	$1,757
3130-0583	Transverse Module (narrow). Locate forward of pump area. Includes a single compartment opening per side (with a shallow lower area and a transverse upper area with diamond plate flooring) and running boards. Upper area for double crosslay/drylay, forward crosslay to be single stacked and rearward drylay to be double stacked.	$4,926
3130-0586	Pump module. Includes 45" wide pump panel opening and running boards. Upper SM pump module with 1.5" single stacked double crosslays 71" from ground, 2.5" double stack single dry crosslay stepped up 7" from double crosslay and diamond plate storage pan.	$8,842

3130-0587	Pump module. Includes 45" wide pump panel opening and running boards. Upper SM pump module with single stacked double crosslays, backboard storage and open back storage pan. Crosslays and backboard storage to be stepped down 8".	$7,655
3130-0588	Pump module. Includes 45" wide pump panel opening and running boards. Upper SM pump module with single stacked double crosslays, backboard storage and open back storage pan.	$7,655
3130-0589	Transverse Module (full width). Locate forward of pump area. Includes a single compartment opening per side (with a shallow lower area and a transverse upper area with smooth plate flooring).	$3,107
3130-0590	Transverse module to hold: Four (4) shoreboards 48" x 92" on edge.	$1,293
3130-0591	Transverse Module (narrow). Locate forward of pump area. Includes Upper and Lower compartment openings each side of module, a 3" extrusion located between upper and lower openings. The separate lower, "tool style" compartment on each side of module shall be shallow with diamond plate flooring, and include a diamond plate door with D-ring door latch. The upper transverse storage area shall include a diamond plate floor that shall extend out to the 3" extrusion which separates the upper and lower compartment openings.	$4,803
3130-0592	Speedlay module. Includes area for triple speedlays with divider(s) and lower storage compartments with push button latches and running boards. The side facing tool compartment doors along with the front and rear facing panels are to be smooth plate and painted gray Zolatone. Running boards to include gator grip and be painted black Durabak.	$3,326
3130-0593	Upper TM pump module with smooth plate side panels painted job color and smooth plate storage pan painted black Durabak.	$2,093
3130-0594	Pump module. Includes 45" wide pump panel opening and running boards. The front access door and the front panels to be smooth plate and painted gray Zolatone. Running boards to include gator grip and be painted black duraback. Used on TM module only.	$6,370
3130-0595	Upper SM pump module with double stacked quad crosslays and no storage pan. Crosslays to be 23" deep. For use on narrow 39" module only with applications approval that no pump panel will be utilized on upper module.	$2,684
3130-0597	Transverse Module (narrow). Locate forward of pump area. Includes a single compartment opening per side (with a shallow lower area and a transverse upper area with diamond plate flooring) and running boards. Upper area for triple crosslay, forward (2) crosslays to be single stacked for 200' of 2.00" DJ hose per lay and rearward crosslay to be single stacked for 150' of 2.50" DJ hose.	$4,708
3130-0598	Pump module. Includes 51" wide pump panel opening and running boards. Upper SM pump module with single stacked double crosslays, backboard storage and diamond plate storage pan. Crosslays to be @ 72" high from ground.	$8,227
3130-0599	Crosswalk module. Includes walkway storage compartments with push button latches, running boards, (1) dual lighted LED folding step each side and access handrails mounted on the pump module. Diamond plate walkway plate to be 21" wide due to 2-door Freightliner DEF tank.	$1,465
3130-0601	Pump module. Includes 51" wide pump panel opening and running boards. Upper SM pump module with double stacked triple crosslays with diamond plate storage pan. Crosslays to be 70" high from ground. Front headboard of module to be lowered 10" and provisions added to mount crosslay cover forward of deck gun channel.	$7,238
3130-0602	Dunnage pan notch. Located in the pump module. Pan to have a notch on the rear wall for the ladders to extend into.	$273
3130-0604	Upper SM pump module with double stacked double crosslay, backboard storage and diamond plate storage pan.	$2,688
3130-0605	Pump module. Includes 51" wide pump panel opening and running boards. Upper SM pump module with double stacked triple crosslays single stack depth for extra capacity with diamond plate storage pan. Crosslays to be 70" high from ground.	$7,538
3130-0607	Upper SM pump module with single stacked triple crosslays and enclosed storage compartment with vertical hinged (rearward) diamond plate access door (1) each side and a bolt-on diamond plate top. Inside compartment will be a vertical partition centered in the opening and a full width adjustable shelf forward of the patition.	$4,077
3130-0608	Top mount eMAX pump module for use with a (2) arm ladder rack. Includes area for a raised double speedlay, TM walkway (raised) 21" front to rear, diamond plate access doors without compartments, dia plt running boards, folding steps with integral lights and (2) vertical handrails. For use with 4X4 application.	$5,523
3130-0609	Pump module top mount with speedlays. Includes 45" wide pump panel opening, dunnage pan and running boards. The crosswalk shall be raised 3". The area directly below the crosswalk walkway shall include three (3) compartments, one (1) each side for storage in the lower area and a horizontal transverse backboard storage directly under the walkway surface with an access door on both sides of the module. (1) 14" diamond plate top mount walkway step with gator grip each side and access handrails mounted on the pump module. Includes area for two (2) speedlays with 1.5" plumbing, one (1) discharge swivel to either side of the body. The front area of the speedlays to have a removable diamond plate panel with D-ring latches.	$11,559
3130-0610	Heat shield. Locate below diamond plate walkway top.	$137
3130-0612	Upper SM pump module with storage for (2) New York Hook pike poles and diamond plate storage pan.	$2,560
3130-0613	Pump module. Includes 57" wide pump panel opening and running boards. Upper SM pump module with double stacked double crosslays, backboard storage, and diamond plate storage pan. Crosslays to be 66-68" high from ground.	$7,308
3130-0614	Pump module top mount with 39" wide pump panel opening, triple sgl stack crosslays rear of TM panel and integral walkway with compartments. Includes dia plt running boards.	$8,548
3130-0615	Upper SM stainless steel pump module with double stacked quad crosslays with top open storage with treadplate flooring.	$2,013

3130-0616	Pump module top mount with speedlays. Includes 45" wide pump panel opening and running boards. Includes area forward of pump panel opening for (2) speedlays (stacked). Includes crosswalk module and walkway storage compartments with push button latches, (1) dual lighted LED folding step each side and access handrails mounted on the pump module.	$10,203
3130-0617	Upper SM pump module with single stacked triple crosslays and rear of the crosslays a Double Stacked Dry Lay.	$4,040
3130-0618	Crosswalk module. Includes walkway storage compartments with push button latches, running boards, (1) dual lighted LED folding step each side and access handrails mounted on the pump module. The crosswalk shall be raised to accommodate storage of (1) backboard.	$1,625
3130-0619	Pump module. Includes 51" wide pump panel opening, integral walkway and running boards. Includes area forward of pump panel opening for (2) speedlays (stacked), lower storage compartments with push button latches, (1) dual lighted LED folding step each side and access handrails mounted on the pump module.	$10,633
3130-0620	One (1) diamond plate gator grip step each side of TM walkway in place of the standard folding step.	$228
3130-0623	Pump module. Includes 39" wide pump panel opening with integral double speedlays and running boards. Upper SM pump module with diamond plate storage pan.	$11,055
3130-0626	Pump module top mount with better visability and with speedlays. Includes 45" wide pump panel opening, dunnage pan and running boards. Top mount walkway includes storage compartments with push button latches, (1) dual lighted LED folding step each side and access handrails mounted on the pump module. Includes area for (3) speedlays - (2) with 1.5" plumbing and (1) with 2.5" plumbing.	$11,548
3130-0627	Pump module. Includes 51" wide pump panel opening and running boards. Upper SM pump module with double stacked double crosslays with diamond plate storage pan. Crosslays to be 66" high from ground.	$6,889
3130-0628	Pump module top mount with better visability and with speedlays. Includes 45" wide pump panel opening, dunnage pan and running boards. Top mount walkway includes storage compartments with push button latches, (1) dual lighted LED folding step each side and access handrails mounted on the pump module. Includes area for (3) speedlays - (2) with 1.5" plumbing and (1) with 2.5" plumbing. Each speedlay to have a 200' capacity of hose.	$11,548
3130-0629	Upper SM pump module with single stacked double crosslay, cribbage storage and diamond plate storage pan. Cribbage storage to be a minimum 4" clear opening (including latch).	$2,820
3130-0630	Upper SM pump module with double stacked triple crosslays (single stacked depth) and rear of the crosslays a single stacked Dry Lay.	$4,040
3130-0632	Upper SM pump module with diamond plate storage pan and storage compartment. Storage compartment located forward of storage pan. Includes (1) full height adjustable divider and vertically hinged stainless steel door each side and push button latches.	$4,866
3130-0633	Upper stainless steel pump module with single stacked triple crosslays and top open storage with treadplate flooring. Crosslay floors lowered to approximately 66" above ground. Crosslay plumbing terminates at side panels below beds.	$2,942
3130-0637	Double vertically stacked speedlays for use with removable trays, 9.5" wide, capacities to be for the selected size preconnect discharges. Includes (1) crosslay at top above speedlays. Module assembly welded integral to the front of SS pump enclosure. Actual module width 13".	$2,953
3130-0639	Pump module one piece. Includes 39in. wide pump panel opening and running boards. Upper SM pump module with single stacked double cross lays and a transverse storage located rearward of cross lays equipped with boxed out lift up tread lids on both sides to accommodate storage of up to a 86in. length stokes basket and a nested back board. Boxed out doors to have D-ring latches, Stainless steel staked hinges and gas shocks and be designed to lift up high enough to easily deploy equipment from below. Door to be tied to door ajar circuit in cab. Upper module to be raised to also accommodate a dunnage pan.	$8,458
3130-0640	Enclosed Pump Module with Double Speedlays. Includes 40.5" wide pump panel opening. Includes area for (2) stacked speedlays, lower storage compartments with D-handle latches forward of pump panel opening. Upper module area to have storage pan.	$18,466
3130-0641	Top mount pump module with 20" walkway and running boards. Includes area forward of pump panel opening for (2) speedlays (stacked), lower storage compartments with push button latches.	$8,652
3130-0643	Interior of Backboard Storage compartment shall include gray zoloatone on floor, sides, and top of storage enclosure. Floor of compartment to include a composite material overlay.	$719
3134-0006	The single gauge panel on the driver's side of the side mount module is to be hinged downward. Includes two (2) cable hold opens, and latches.	$139
3134-0009	The gauge panel(s) on the driver side of the Side Mount module to be hinged upward. Includes two (2) gas shock hold opens and latches.	$139
3134-0011	Officer side pump panel to be vertical hinged on forward extrusion. Panel(s) to be secured in the closed position with push button latches. Upper panel to be held open with gas shock.	$512
3134-0013	Driver and Officer side pump panels to be vertical hinged on forward extrusion. Panels to be (2) or (3) pieces, depending on module height, and secured in the closed position with push button latches. Upper panels to be held open with gas shock.	$1,019
3134-0015	Stainless steel TM control panel, driver and officer side pump panels.	$991
3134-0017	The TM control panel, driver and officer side pump panels are to be painted Zolatone black.	$835
3134-0018	The TM control panel, driver and officer side pump panels are to be painted Zolatone gray.	$835
3134-0019	The driver and officer side pump panels are to be painted Zolatone black.	$650
3134-0020	The driver and officer side pump panels are to be painted Zolatone gray.	$650
3134-0021	Body mainframe and upper body/hosebed side assemblies for a 95" high body.	$1,354
3134-0026	Pump panel support angles. Locate up to (3) horizontal mounted as required on interior side of the main vertically hinged pump panel(s).	$158
3134-0027	TM control panel to be Zolatone gray and driver and officer side panels to be stainless steel.	$588
3134-0028	Pump panel layout and approval drawing to match existing and/or previous unit. To match as close as possible (Engineering and/or vendor requirements may alter final panel layout).	$432

3134-0035	Officer side pump access door to be two piece. Split door for access to pump area with ladders mounted on rack.	$221
3134-0036	The TM control panel to be painted zolatone black and the driver and officer side pump panels are to be stainless steel.	$1,086
3134-0041	Pump operator panel in L1 forward area. Includes stainless steel panel with vertical hinge.	$653
3134-0042	Pump panels. Driver side upper pump access panel to be horizontally hinged with diamond plate door. Includes (2) push-button latches and (2) hold opens. Officer side pump panel to be vertically hinged on forward extrusion. Panel to be (2) or (3) pieces, depending on module height, and secured in the closed position with push button latches. Upper panel to be held open with gas shock.	$1,019
3134-0051	Driver and Officer side upper pump access panels to be horizontally hinged with diamond plate doors. Includes (2) D-ring latches and (2) hold opens for each.	$604
3134-0052	Driver side pump panel to be vertically hinged on forward extrusion. Panel to be (2) piece and lower panel to be secured in the closed position with push button latches. Upper panel to be stationary.	$715
3134-0053	Officer side pump panel Escutchion Plate shall be attach with Thumb Latch.	$184
3134-0055	Officer side upper pump access panel to be horizontal hinged with stainless steel door. Includes (2) push button latches and (2) hold open devices.	$217
3134-0056	Driver side panel shall be attach with screw.Officer side pump panels to be vertically hinged on forward extrusion. Panels to be (2) or (3) pieces, depending on module height, and secured in the closed position with push button latches. Upper panels to be held open with gas shock.	$1,019
3134-0064	The gauge panel(s) on the driver side of the Side Mount module to be hinged upward. Panel(s) to include (2) mechanical/pneumatic (as applicable to panel size) hold opens and latches.	$139
3134-0065	Driver and Officer side pump panels. Upper panel to be bolt-on diamond plate panel. Lower pump panel to be vertically hinged on forward extrusion. Panel to be secured in the closed position with push button latches.	$1,428
3134-0066	Officer side upper pump access panel to be horizontally hinged with smooth plate door painted Zolatone black. Includes (2) push button latches and (2) hold open devices.	$650
3134-0068	Driver side panel shall be attach with screw and Escutchion Plate shall be vertically hinge forward.Officer side pump panels to be vertically hinged on forward extrusion. Panels to be (2) or (3) pieces, depending on module height, and secured in the closed position with push button latches. Upper panels to be held open with gas shock.	$1,019
3134-0069	The stainless steel single gauge panel on the driver side of the side mount pump module is to be hinged downward. Includes two (2) cable hold opens, and latches.	$139
3134-0070	The stainless steel double gauge panels on the driver side of the side mount pump module are to be hinged downward. Includes two (2) cable hold opens and latches, per door. Required with 6" master gauges and/or overcrowded single lower gauge panels.	$280
3134-0072	Driver and officer side mounted pump panels are to be brushed stainless steel.	$560
3134-0073	Driver and officer side mount pump panels are to be stainless steel with black Zolatone finish. Includes black suction and discharge bezels.	$650
3134-0074	The top mount control panel and the driver and officer side pump panels are to be brushed stainless steel.	$991
3134-0078	Special Driver and Officer side pump panels to be vertically hinged on forward extrusion. Panels to be (2) or (3) pieces, depending on module height, and secured in the closed position with push button latches. Upper panels to be held open with gas shock.	$1,466
3134-0082	Driver side pump panel Escutchion Plate shall be hinge forward. Include thumb Latches.	$276
3134-0083	The main and lower pump panel to be inset in the rear body and to run full height just below the roll-up door drum. Panels to enclosed on the sides and bottom with bolt-in plates matching main panel material.. Panel materials to be [#LOC].	$511
3134-0084	Driver and Officer side upper pump access panels to be horizontally hinged with aluminum smooth plate doors painted job color. Includes (2) push-button latches and (2) hold opens for each.	$650
3134-0086	The side pump intake / discharge panels to be painted Zolatone gray. eMAX only.	$321
3134-0087	Pump operator control panel in driver side forward body compartment to be painted Zolatone gray. eMAX only.	$407
3134-0088	The side pump intake / discharge panels to be painted Zolatone black. eMAX only.	$321
3134-0089	Pump operator control panel in driver side forward body compartment to be painted Zolatone black. eMAX only.	$407
3134-0090	Custom sized stainless steel gauge panel(s) on the driver side of the side mount pump panel are to be hinged downward. Includes two (2) cable hold opens and latches.	$1,927
3134-0091	Officer side upper pump access panel to be horizontally hinged with diamond plate door. Includes (2) push-button latches and (2) hold opens. Lower pump panel Escutchion plate to be vertically hinged forward. Panel to be secured in the closed position with push button latches.	$715
3134-0093	Top mounted pump operator control panel to be painted Zolatone gray. eMAX only.	$335
3134-0094	Top mounted pump operator control panel to be painted Zolatone black. eMAX only.	$335
3134-0095	The upper gauge panel on the enclosed pump panel is to be hinged forward. Side mount eMAX only.	$139
3134-0099	The driver and officer side under mount pump panel to be stainless steel. Includes panel supports and hinged upper diamond plate top (driver side) with hold-down.	$946
3134-0101	The driver side pump panel below tank to be painted Zolatone black. Wetside Tanker Only.	$435
3134-0103	The pump operator's pump panel and rear main pump panels are to be painted Zolatone black.	$650
3134-0104	Officer side upper pump access panel behind crosslays to be horizontally hinged with stainless steel door. Includes (2) push button latches and (2) hold open devices.	$217
3134-0106	Officer side pump panel escutchion plate shall be around each discharge, and pump intakes.	$182
3134-0107	The TM control panel to be stainless steel. The driver and officer side pump panels are to be painted Zolatone black.	$835
3134-0108	Booster reel rewind switch. Switch guarded half moon. Location on driver side upper pump display panel.	$30

3134-0112	Side control pump enclosure structure and panels to be modified as necessary to provide the lowest practical crosslay floor height from the ground.	$1,358
3134-0113	Officer side upper pump access panel to be horizontally hinged with aluminum smooth plate door painted Zolatone black both sides. Includes (2) push button latches and (2) hold open devices.	$259
3134-0114	Driver and officer side mount pump panels are to be stainless steel with gray Zolatone finish.	$650
3134-0121	The side pump intake / discharge panels to be painted Zolatone black. SS eMAX only.	$392
3134-0122	Pump operator control panel in driver side forward body compartment to be painted Zolatone black. SS eMAX only.	$497
3134-0123	Top mounted pump operator control panel to be painted Zolatone black. SS eMAX only.	$409
3134-0127	Driver and officer side mount pump panels are to be stainless steel with black Zolatone finish. Includes brushed suction and discharge bezels (not coated). Includes T bar and trim.	$614
3134-0129	Driver side mount pump panel to be stainless steel with black Zolatone finish. Includes black suction and discharge escutcheon plates.	$326
3134-0130	Zoloatone escutcheon plate under each (4) foam control handles. Hole diameter shall be as tight as possible to handle shaft size.	$241
3134-0131	Driver and Officer side upper pump access panels to be horizontally hinged with stainless steel doors. Includes (2) D-ring latches and (2) hold opens for each.	$698
3134-0133	Driver and officer side upper pump access panels to be horizontal hinged with stainless steel doors. Includes (2) push-button latches and (2) hold opens for each.	$432
3134-0134	Officer side upper pump access panel to be horizontally hinged with smooth plate door painted Zolatone to match lower panels. Includes (2) push button latches and (2) hold open devices.	$217
3134-0135	Driver and officer side upper pump access panels to be horizontally hinged with smooth plate door painted Zolatone to match lower panels. Includes (2) push button latches and (2) hold opens for each.	$432
3134-0136	The side upper module panels/ access smooth plate doors to be painted Zolatone black. eMAX only.	$321
3134-0142	Pump panel support angles. Locate up to (3) horizontal mounted as required on interior side of the main vertically hinged pump panel(s).(Bolt on support).	$157
3134-0147	Driver and officer side mount pump panels are to be stainless steel with black Zolatone finish.	$615
3136-0000	Air horn switch at pump panel. Switch to be labeled "Evacuation Alert". Location: [#LOC].	$144
3136-0002	Microphone box. Locate at the [#LOC].	$507
3136-0003	Microphone box, Cast Products. Locate at/in the [#LOC].	$473
3136-0004	The lower area of the pump compartment to have a four (4) sided heat pan with two (2) removable (side to side) bottoms. Bottoms to be secured in the closed position with mechanical fasteners.	$1,031
3136-0005	The crosslay divider(s) to be notched both ends for Task Force Nozzle.	$125
3136-0006	Two (2) pump compartment heaters are to be mounted in the pump area. Locate as low as possible.	$1,676
3136-0007	Two (2) FRC Mansaver bars, (1) each side. Installed at pump module crosswalk area. The bars are to include [#COL] vinyl covers.	$1,297
3136-0010	Stainless steel roller assemblies for crosslays and/or speedlays.	$299
3136-0011	P-Rubber in flex joint(s) between pump module and/or body modules.	$614
3136-0012	Slat flooring. The crosslay and/or speedlays are to have removable slat flooring.	$379
3136-0013	Additional Booster Reel Roller Assembly. Locate opposite side of booster reel.	$249
3136-0015	(2) vertical mounted booster reel spool guide roller assemblies. Locate (1) each side on trailing edge of beavertails/body (as applicable). For use with rear compartment mounted booster reel or similar.	$493
3136-0016	Speedlay module trays mounted to a bi-directional Slide Master tray.	$1,252
3136-0017	Driver side pump enclosure. The driver side lower pump module to be full width and full depth of the module and include area in upper section for mounting of roll-up door.	$3,123
3136-0018	Officer side pump enclosure. The officer side lower pump module to be full width and full depth of the module and include area in upper section for mounting of roll-up door.	$3,123
3136-0023	Microphone Box Cast Products. Locate at/in the [#LOC].	$502
3136-0024	Crosslays to accomadate extra capacity.	$541
3136-0025	Microphone box. Dimensions for microphone box are 14" wide x 6.5" high x 5.5" deep. Locate at the [#LOC].	$556
3136-0026	The crosslay divider(s) to have a hand hold cutout on outboard edge each side of divider(s).	$262
3136-0029	Air horn switch at pump panel. Switch to be labeled "Air Horn". Location: [#LOC].	$144
3136-0031	Removable Speedlay Tray(s). The floor of the tray(s) to be slotted to prevent the accumulation of water and allow for ventilation of wet hose.	$617
3136-0033	Crosslay divider(s) to be lowered approx 5" to provide room for bail handled nozzle(s) below cover.	$125
3136-0034	Microphone box 10W X 6H X 11D located on pump operator panel.	$577
3136-0037	Top mount walkway compartments. Includes spring mounted hinged doors with push button latch. Each compartment includes (1) incandescent light and wired to door adjar indicator.	$922
3136-0042	Stainless steel roller assemblies for crosslays and/or speedlays. Rollers on side extrusions only and scuff plates on bottom extrusions.	$779
3136-0044	Pump panel compartments with push button latch. Locate (1) driver side pump panel and (1) officer side pump panel. Compartments to be located in lower forward corner of pump panels. Compartments to be approx. 14" wide x 14" high x 14" deep.	$1,893
3136-0045	Microphone Box Cast Products. Locate at/in the [#LOC].	$502
3136-0050	Extreme weather heat pan plates. Includes interior module area mounted plates for increasing the lower heat pan (forward and rearward) into the lower area of the module for increased heat retaining.	$440
3136-0051	Air horn switch at pump panel. Switch to be labeled "Code Red". Location: [#LOC].	$144
3136-0053	Microphone box. Locate at the [#LOC]. Microphone box to be 9"W x 11"H x 6.5"D.	$633

3136-0054	Deckgun to be located offset to the driver side of the dunnage storage pan. Deckgun piping to be recessed as low as possible for use with Akron Apollo Hi-Riser #3431	$681
3136-0055	The speedlay divider(s) to be held 12" short both ends for Nozzles.	$393
3136-0056	The crosslay divider(s) to be held 12" short both ends.	$413
3136-0059	Speedlay module tray(s) mounted to a directional SlideMaster tray. SlideMaster to have 100% extension to one side.	$1,438
3136-0061	Heat pan removable bottoms to have screws and nuts in place of butterfly latches.	$280
3136-0064	Heat pan. The lower area of the pump compartment to have a four (4) sided heat pan with two (2) removable (side to side) bottoms. Bottoms to be secured in the closed position with butterfly latches.	$1,031
3136-0066	Microphone box. Dimensions for microphone box are 12.5" wide x 8" high x 6" deep. Locate at the [#LOC].	$556
3136-0069	Speedlay module tray(s) mounted to a directional Slide Master tray. Slide Master to have 100% extension to the officer side.	$1,438
3136-0070	Stainless steel scuff plate assemblies for speedlays. Scuff plates to be on top, bottom and sides of each opening.	$779
3136-0071	Microphone Box Cast Products. Locate at/in the [#LOC].	$473
3136-0073	Removable Poly Speedlay Tray(s). The floor of the tray(s) to be slotted to prevent the accumulation of water and allow for ventilation of wet hose.	$566
3136-0074	Stainless steel scuff plates for crosslays and/or speedlays.	$347
3136-0076	Pump module mounted 3 sided light tower shield with approx 28 degree side slope to the driver side. The shield to be even with top of the body and painted job color.	$1,218
3136-0078	Top mount walkway compartments. Includes spring mounted hinged doors with push button latch. Each compartment includes (1) LED light and wired to door adjar indicator.	$922
3136-0079	Q2B switch at pump panel. Switch to be labeled "Evacuation Alert". Location: [#LOC].	$144
3136-0081	A pump compartment heater with 110V blower to be mounted in the pump area.	$1,306
3136-0083	Removable Poly Speedlay Tray. The floor will be notched for the preconnect swivel to be positioned as required with the tray in the stowed position. The floor of the tray(s) to be slotted to prevent the accumulation of water and allow for ventilation of wet hose.	$566
3136-0085	Cast Products EB0010-1-A microphone box. Locate on driver side pump panel. Hinge door to the right.	$546
3136-0086	Notched crosslay divider(s) on both ends for preconnect line(s) nozzle end storage with NFPA cover(s) in closed position. Additional 45 degree angle notch on inside edge on each side. Crosslay divider(s) to be held 1" short below crosslay cover.	$307
3136-0087	Aluminum splash guard over top of hydraulic pump for cab tilt.	$195
3136-0088	Captive booster reel rollers mounted through panel/module. Locate to booster reel side and size for width of reel assembly.	$407
3136-0090	Speedlay tray - removable. Tray includes a 1.25" extruded alum handle low on each end of tray and slots down each side to facilitate lifting. The floor of the tray shall have poly slides and be slotted to prevent the accumulation of water and allow for ventilation of wet hose.	$617
3136-0091	Vertically hinged access door with push button latch for cord reel in driver side of dunnage pan. Includes cut-out in dunnage pan for access to cord reel rollers. Mount junction box to inside of access door.	$483
3136-0093	Dunnage area Right side, option, Wildland	$1,200
3136-0094	Pump panel compartment, Right side, base, Wildland	$1,429
3136-0095	Delete Pump panel compartment, Right side, option, Wildland	$602
3136-0096	Stainless steel roller assemblies for crosslays. Includes handrail the width of the crosslays in place of bottom roller.	$433
3136-0098	Microphone box. Dimensions for microphone box are 12" wide x 12" high x 6" deep. Locate at the [#LOC].	$576
3136-0099	Captive booster reel rollers. (1) mounted through dunnage pan floor inboard of booster reel and (1) thru pump access door. Locate to booster reel side and size for width of reel assembly.	$407
3136-0100	Notched Speedlay divider(s) on the both for connecting preconnect hoses. Notch to be 12"L X 4"H enough room to use a spanner wincher for connecting hoses.	$97
3136-0102	Booster Reel Riser for rollers. Locate with officer side dunnage pan rollers.	$92
3136-0103	Booster Reel Riser for rollers. Locate with driver side dunnage pan rollers.	$91
3136-0104	The lower area of the under frame pump compartment to have a four (4) sided heat pan with two (2) removable (side to side) bottoms. Bottoms to be secured in the closed position with butterfly latches. Wetsides Only.	$1,031
3136-0107	Microphone box. Locate at the [#LOC]. Microphone box to be 9"W x 11"H x 8"D. Locate Pump operator panel.	$633
3136-0108	(2) vertically mounted booster reel spool guide roller assemblies. Locate (1) each side inside rear body compartment opening. For use with rear compartment mounted booster reel.	$493
3136-0109	Removable Poly Box(s). Box to be located in lower transverse storage area (one each side), approx. 15" high x 14" wide x 34" deep. The floor of the box(es) to be slotted to prevent the accumulation of water and allow for ventilation of wet hose.	$566
3136-0110	Captive booster reel rollers mounted through panel/module. Locate to booster reel side and size for width of reel assembly.	$407
3136-0111	Microphone box. Dimensions for microphone box are 8" wide x 12" high x 6" deep. Locate at the [#LOC].	$556
3136-0114	The running board(s) to be notched for Pistion Intake Valve. Location(s): [#LOC].	$478
3136-0115	The lower area of the pump compartment to have a four (4) sided heat pan with two (2) removable (side to side) bottoms. Lower section of pan designed to provide the maximum amount of ground clearance. Bottoms to be secured in the closed position with butterfly latches.	$1,031
3136-0117	P-Rubber in flex joint(s) between pump module and/or body modules. Horizontal across tops and along sides at flex joint(s).	$614

3136-0118	A two (2) piece aluminum pan shall be bolted in place below the pump controls within the pump module. This pan shall utilize .090 aluminum plate to provide a shield to reduce heat loss as the pump controls exit the pump module for the top mount control panel.	$267
3136-0120	Captive booster reel rollers mounted on booster reel assembly. Rollers sized for width of reel assembly.	$407
3136-0121	Speedlay tray - Polypropylene - removable. Tray includes pull out grab handle (poly dowel) down low on each end to facilitate lifting. The trays shall be made from Polypropylene, the floor of the tray shall be slotted to prevent the accumulation of water and allow for ventilation of wet hose.	$876
3136-0122	Commercial chassis requires 3" additional to cab and body gap due to exhaust requirements.	$346
3136-0126	Microphone box. Dimensions for microphone box are 7.5" wide x 15" high x 11" deep. Locate at the [#LOC].	$556
3136-0127	The pump module storage pan shall be upgraded to include a hinged cover. The hinged cover shall be constructed of 3/16" embossed aluminum tread plate, include a grab handle, (2) butterfly latches and hold open device(s). The cover shall be included in the door ajar circuit and may be used a walking surface.	$526
3136-0129	Horizontally hinged access door with D-ring latch for access to officer side of dunnage pan. Includes cut-out in dunnage pan.	$483
3136-0130	Speedlay tray - Polypropylene - removable. Tray includes pull out grab handle (poly dowel) down low on each end to facilitate lifting. The tray(s) shall be sized approximately 18" H X 10" W. The tray(s) shall be made from Polypropylene, the floor of the tray shall be slotted to prevent the accumulation of water and allow for ventilation of wet hose.	$876
3136-0133	Removable Poly Speedlay Tray(s). The floor of the tray(s) to be slotted to prevent the accumulation of water and allow for ventilation of wet hose.	$566
3136-0135	Removable Poly Speedlay Tray(s). The floor of the tray(s) to be slotted to prevent the accumulation of water and allow for ventilation of wet hose. Trays will be equipped with a handle each side to assist in removing from speedlay storage area.	$566
3136-0136	Removable speedlay tray(s). The floor of the tray(s) shall be sloped from a raised position in the middle slanted downward towards each end. Additionally the floors shall be slotted to prevent the accumulation of water and allow for ventilation of wet hose. There shall be slotted hand holds on each side of the tray (IPO grab handles on each end).	$754
3136-0137	All drains within the pump module shall be bundled together to exit the heat pan as a bundle beneath the pump, rather than separately.	$211
3136-0138	Pump module storage pan.	$778
3136-0139	Crosslay double 7.5" wide each to hold up to 200' of 2.0" DJ hose (each).	$763
3136-0140	Crosslay double 7.5" wide each with extra depth to hold up to 400' of 2.0" DJ hose (each).	$939
3136-0141	Crosslay double 4.25" wide single stack to hold up to 200' of 2.0" DJ (each).	$912
3136-0142	Crosslay triple 4.25/4.25/5" wide single stack to hold up to 200' of 2.0" DJ (each) in front lays and 150'-200' 2.5" DJ hose in rear lay.	$1,352
3136-0144	Crosslay single 5" wide single stack to hold up to 200' of 2.0" DJ or 150'-200' 2.5" DJ hose.	$505
3136-0146	Compartments for TM walkway (PR). Includes hinged door each side with push button latch and LED compartment light. Requires TM pump module with walkway.	$759
3136-0151	Microphone box. Dimensions for microphone box are 12" wide x 12" high x 6" deep. Locate at the driver side pump panel. With hold open device.	$680
3136-0152	Air horn switch at pump panel. Switch to be labeled "Evacuation Alert" with a 4" x 2.5" orange backing plate.	$196
3136-0153	(2) vertically mounted booster reel spool guide roller assemblies. Locate (1) each side on trailing edge of body 3x3 down low.	$493
3136-0154	Enclosed transverse compartment above pump gauge panel. Approximately 24" H x 15" W x 76" L. Includes vertically hinged SS doors each side and D-ring latch with gas tube hold opens, and the top of the compartment will be embossed aluminum treadplate.	$1,793
3136-0157	Stainless steel scuff plates for speedlays. Includes full height of exterior extrusion to lower tool compartment.	$321
3136-0158	Upper and/or lower speedlay tray 8.5" interior width. - removable. Tray includes a 1.25" extruded alum handle low on each end of tray and slots down each side to facilitate lifting. The floor of the tray shall have poly slides and be slotted to prevent the accumulation of water and allow for ventilation of wet hose.	$617
3136-0162	Hi Rise tray - removable. Tray includes a 1.25" extruded alum handle low on each end of tray and slots down each side to facilitate lifting. The floor of the tray shall have poly slides and be slotted to prevent the accumulation of water and allow for ventilation of wet hose.	$617
3136-0164	Stainless steel scuff plate assemblies for speedlays & crosslays. Scuff plates to be on top, bottom and sides of each opening mechanically fastened with screws.	$1,195
3136-0165	Microphone box. Dimensions for microphone box are 14" wide x 6" high x 6" deep. Locate at the pump operator panel.	$556
3136-0166	Removable Speedlay Tray(s). The floor of the tray(s) to be slotted to prevent the accumulation of water and allow for ventilation of wet hose. The side walls of tray(s) to be approx same height with slots down each side to facilitate lifting. This tray should be used with Taller Speedlay opening.	$617
3136-0178	Microphone box. Dimensions for microphone box are 14" wide x 5" high x aprox 6" deep. Locate at the the right side of the top mount gauge panel. SS top mount product only	$581
3136-0179	Recessed area in storage pan for deck gun to be as low as practical. Deck gun connection to terminate 3" below top of pump module.	$646
3136-0180	Crosslay triple 4.25/4.25/4.25" wide single stack to hold up to 200' of 2.0" DJ in each hose lay.	$1,352
3136-0181	Speedlay tray - removable - extra length for full width module. Tray to be 14W x 9H x Full width of module. Tray includes a 1.25" extruded alum handle on each end of tray and slots down each side to facilitate lifting. The floor of the tray shall have poly slides and be slotted to prevent the accumulation of water and allow for ventilation of wet hose.	$711
3136-0182	Crosslay double 6.25" wide single stack to hold up to 200' of 2.0" DJ (each).	$912
3136-0184	Crosslay double 5.5" wide single stack to hold up to 200' of 2.0" DJ (each).	$912

3136-0185	Extra Capacity Removable Poly Speedlay Tray(s). Tray(s) to be approx 8.25" wide inside X 17.50" high inside. The floor of the tray(s) to be slotted to prevent the accumulation of water and allow for ventilation of wet hose.	$566
3300-0007	Door single vertical hinged painted. Location(s): [#LOC]	$762
3300-0008	Door double vertical hinged painted. Location(s): [#LOC].	$847
3300-0009	Door single vertical hinged diamond plate. Location(s): [#LOC]	$533
3300-0010	Door double vertical hinged diamond plate. Location(s): [#LOC].	$762
3300-0011	Door single horizontal hinged lift-up box pan configuration painted. Location(s): [#LOC]	$740
3300-0012	Door single horizontal hinged lift-up box pan configuration diamond plate. Location(s): [#LOC]	$574
3300-0013	Door roll up short (up to 45") with satin finish POK. Location(s): [#LOC]	$767
3300-0014	Door roll up tall (greater than 45") with satin finish POK. Location(s): [#LOC]	$1,098
3300-0015	Door roll up short (up to 45") with painted finish POK. Location(s): [#LOC]	$1,228
3300-0016	Door roll up tall (greater than 45") with painted finish POK. Location(s): [#LOC]	$1,555
3300-0017	Door roll up short (up to 45") with satin finish ROM. Location(s): [#LOC].	$854
3300-0019	Door roll up tall (greater than 45") with satin finish ROM. Location(s): [#LOC].	$1,218
3300-0021	Door roll up short (up to 45") with painted finish ROM. Location(s): [#LOC].	$1,447
3300-0022	Door roll up tall (greater than 45") with painted finish ROM. Location(s): [#LOC].	$1,811
3300-0023	Door single stainless steel vertical hinged painted. Location(s): [#LOC]	$953
3300-0024	Door double stainless steel vertical hinged painted. Location(s): [#LOC]	$973
3300-0025	Door single horizontal hinged drop down painted. Location(s): [#LOC]. Door(s) will have chain hold open devices.	$611
3300-0026	Door single stainless steel horizontal hinged drop down painted. Location(s): [#LOC]	$762
3300-0027	Door bi-fold horizontal hinged diamond plate. Location(s): [#LOC]. Includes upper door mounted guide roller assembly and the lower door will have chains for side or upper rear body mount or bumper style for lower rear body mounted.	$847
3300-0028	Door tri-fold vertical hinged diamond plate. Location(s): [#LOC]	$1,152
3300-0029	Door single stainless steel horizontal hinged lift-up painted. Location(s): [#LOC]	$976
3300-0030	Door double 3-point vertical hinged painted. Location(s): [#LOC]	$1,689
3300-0062	Keyed compartment door latch with #1250 key. Location(s): [#LOC].	$81
3300-0063	Keyed roll-up compartment door with #1250 key. Location(s): [#LOC].	$143
3300-0064	All apparatus doors, body and chassis, are to be keyed alike. Not avail on Commercial Chassis. Requires keyed latch option to be included in shop order.	$315
3300-0065	Electric lock for an ROM roll-up door (EA). The door to lock on both sides of compartment as applicable. Includes manual J236 key lock. Location(s): [#LOC]	$627
3300-0066	Drip pan for a ROM roll-up door (EA). Location(s): [#LOC].	$172
3300-0076	Door double 3-point vertical hinged painted. Location(s): [#LOC]	$1,231
3300-0080	Stainless steel interior body door overlay. Each hinged body door interior surface to have a stainless steel overlay. Overlay to fit around any surface mounted items on the door.	$3,171
3300-0081	Keyed compartment door latch (Best Lock). Location(s): [#LOC]	$206
3300-0093	Door double stainless steel vertical hinged un-painted. Location(s): B1. Includes D-Ring latch. Includes brushed stainless steel overlay to match center rear body.	$1,073
3300-0096	Keyed roll-up compartment door with #J236 key. Location(s): [#LOC]	$143
3300-0097	Keyed compartment door latch with #J236 key. Location(s): [#LOC]	$81
3300-0099	Intergrated sill plate. Water Dam type door sill for ROM rollup door. Location(s):[#LOC]	$147
3300-0100	Cleveland door springs provided for vertical hinged body door(s). Locate [#LOC].	$156
3300-0102	Polished stainless steel interior body door overlay. Each hinged body door interior surface to have a polished stainless steel overlay. Overlay to fit around any surface mounted items on the door.	$4,757
3300-0103	Door double vertical hinged smooth plate sanded. Location(s): [#LOC].	$847
3300-0104	Keyed compartment Tri-Mark model 030-1300 door locking latch with (2) TM-700 keys. Location: [#LOC].	$163
3300-0105	Door roll up tall (greater than 45") with satin finish Amdor. Location(s): [#LOC].	$1,591
3300-0106	Door roll up short (up to 45") with satin finish Amdor. Location(s): [#LOC].	$1,139
3300-0107	Pull down straps for lift-up door. Loc: [#LOC].	$106
3300-0119	Door single vertical hinged smooth plate sanded. Location(s): [#LOC].	$762
3300-0120	Electric lock for a ROM roll-up door (EA). The door to lock on both sides of compartment as applicable. Includes manual 1250 key lock. Location(s): [#LOC]	$627
3300-0129	Door bi-fold horizontal hinged smooth plate sanded. Location(s): [#LOC].	$921
3300-0131	Door bi-fold horizontal hinged painted. Location(s): [#LOC]. Includes upper door mounted guide roller assembly and the lower door will have chains for side or upper rear body mount or bumper style for lower rear body mounted.	$1,050
3300-0132	Door to be notched for LDH hose. Notch on driver side to be approximately 5.75"W x 3.75"H and notch on officer side door to be approximately 10"W x 3.75"H. Location: B1 door.	$304
3300-0133	Door single horizontal hinged drop-down sanded smooth plate. Location(s): [#LOC].	$485
3300-0134	Door single horizontal hinged lift-up box pan configuration painted. Includes double D-rings due to width of the door. Location(s): [#LOC]	$740
3300-0135	Door double 3-point vertical hinged smooth plate sanded. Location(s): [#LOC].	$1,689
3300-0138	Keyed compartment door latch with #CH751 key. Location(s): [#LOC]	$81
3300-0139	Door double 3-point horizontal hinged painted. Location(s): [#LOC]. Lower door should act as an exterior writing surface, w/ adjustable angles. The paddle latch on the second door shall not protrude past the edge of the door.	$1,689
3300-0140	Door single horizontal hinged drop down diamond plate. Location(s): [#LOC].	$460
3300-0141	Tri-Mark door latch. Location(s): [#LOC].	$82
3300-0142	Stainless steel door single vertical hinged painted. Location(s): [#LOC].	$762
3300-0143	Stainless steel short doors double vertical hinged painted. Location(s): [#LOC].	$847
3300-0144	Stainless steel door horizontal hinged lift-up painted. Location(s): [#LOC].	$740
3300-0145	Stainless steel door single horizontal hinged drop-down, painted. Location(s): [#LOC].	$611
3300-0146	Stainless steel tall doors double 3-point vertical hinged painted. Location(s): [#LOC].	$1,689

3300-0147	Stainless steel short doors double 3-point vertical hinged painted. Location(s): [#LOC].	$1,231
3300-0148	Stainless steel door single vertical hinged brushed, unpainted. Location(s): [#LOC].	$762
3300-0151	Drip pan with drain for a ROM roll-up door (EA). Location(s): [#LOC].	$221
3300-0164	Door double vertical hinged w/rotary latches - painted . Location(s): [#LOC]	$847
3300-0165	Door double vertical hinged w/rotary latches - smooth plate sanded. Location(s): [#LOC].	$847
3300-0166	Door double vertical hinged w/rotary latches - diamond plate. Location(s): [#LOC]	$762
3300-0167	Door double 3-point vertical hinged w/rotary latches - painted. Location(s): [#LOC]	$1,689
3300-0168	Door double 3-point vertical hinged w/rotary latches - painted. For use with compartments up to 50" high. Location(s): [#LOC].	$1,231
3300-0169	Door double 3-point vertical hinged w/rotary latches - smooth plate sanded. Location(s): [#LOC]	$1,689
3300-0174	Keyed roll-up compartment door with #CH751 key. Location(s): [#LOC].	$143
3300-0177	Door single horizontal hinged drop down painted. Door will have 2 D-ring handles. Location(s): [#LOC].	$789
3300-0191	First closed door of double door compartment to have top and bottom latches (Each).	$239
3300-0195	Door roll up tall (greater than 45") with painted finish Amdor. Location(s):[#LOC].	$2,158
3300-0196	Door double vertical hinged painted, includes (2) gas shock-style hold-open device IPOS. Location(s): [#LOC].	$913
3300-0197	Door roll up short (up to 45") with painted finish Amdor. Location(s): [#LOC].	$1,916
3300-0202	Door single horizontal hinged drop-down sanded smooth plate. Location(s): [#LOC].	$485
3300-0204	Door to be notched for 5" LDH hose. Notch to be approximately 8"W x 2.5 "H. Location: top of B1 officer side door.	$304
3300-0205	3-Point latch double doors to have latch brackets installed with "PULL" tags.	$598
3300-0206	Additional roll up door stop latches shall be mounted for B1 at a raised location aligned with the bottom of the ladder tunnel. The raised latches/hooks shall not be included as part the door ajar circuit.	$74
3300-0207	Door bi-fold horizontal hinged smooth plate sanded. Location(s): [#LOC]. Includes upper door mounted guide roller assembly and the lower door will have chains for side or upper rear body mount or bumper style for lower rear body mounted.	$1,032
3300-0211	Door to be notched for 3" DJ hose. Notch to be 5" W x 1" H. Location: top of B2 officer side door. This door is to be the "first opened" door as shown on drawing.	$304
3300-0212	Keyed compartment Tri-Mark model 030-1300 door locking latch with (2) 1250 keys. Location: [#LOC].	$163
3300-0215	Additional roll up door stop latches (PR) shall be mounted at a raised location aligned with the reduced depth transition area. The raised latches/hooks shall not be included as part the door ajar circuit. Location(s): [#LOC].	$74
3300-0219	Install dealer supplied roll up doors. The roll up doors for location(s): [#LOC]. shall be dealer supplied. These door kit(s) as supplied will be complete and correct for compartment(s) specified. E-ONE manufacturing shall install these dealer supplied ROM roll up door(s).	$238
3300-0220	Reverse hinge single compartment door. Includes vertical mounted drip rail along forward area of compartment opening (in addition to the horizontal drip rail above the door opening). Location(s): [#LOC].	$158
3300-0222	Double door to have latch handle extension installed on secondary door's interior latch with "PULL" tags. Location(s): [#LOC]	$61
3300-0224	Pull down straps for ROM roll-up door ipo rope. Location(s): [#LOC].	$35
3300-0228	Door double 3-point vertical hinged w/rotary latches - painted. Location: [#LOC]. D-ring primary door located rearward ipo standard. Door double 3-point vertical hinged w/rotary latches - painted.	$1,689
3300-0234	Door single vertical hinged painted EOD USAF. Location(s): [#LOC]	$762
3300-0235	Door single horizontal hinged drop down painted. EOD USAF. Location(s): [#LOC]. Door(s) will have chain hold open devices.	$611
3300-0236	Door double vertical hinged - painted. EOD USAF. Location(s): [#LOC]	$847
3300-0238	Door single horizontal hinged lift-up box pan configuration painted. EOD USAF. Location(s): [#LOC]	$740
3300-0239	Door single vertical hinged painted with the hinge reversed so the door open opposite of standard. Location(s): [#LOC]	$762
3300-0247	Door horizontaly hinged without pan drop down smooth plate sanded. Single point D-Ring latch. Includes (2) hose notches on opening end. Left side notch for 5" LDH and right side for 3" DJ. Location: B2	$538
3300-0248	There shall be single piece compartment door drip rail provided over L1/L2, L5/L6, R1/R2 & R4/R5. Only available with (2) consecutive compartments with like doors.	$204
3305-0000	Diamond plate generator cover.	$1,027
3305-0002	Bi-Fold diamond plate cover for the crosslay area. Includes applicable grab handles and (2) hold downs. Non-aerial applications to be tagged as a non-stepping surface.	$900
3305-0003	Single diamond plate cover for the crosslay area. Includes applicable grab handle(s) and (2) hold downs. Non-aerial applications to be tagged as a non-stepping surface.	$609
3305-0006	All hand rails (as applicable) are to have a rubber insert. Includes cab (N/A on commercial chassis), pump module and body.	$1,818
3305-0007	Vinyl [#COL] hose bed cover with attached rear flap(s).	$877
3305-0008	Vinyl [#COL] crosslay cover with attached side flaps.	$308
3305-0009	Compartment underbody with slide-out tray.(**Obsolete** See Sales code 3380-0078) Includes drop down front door with push button latch(es). [#LOC]	$1,953
3305-0010	Compartment underbody. Includes drop down front door with push-button latches. Locate [#LOC].	$1,269
3305-0011	(2) piece aluminum hose bed cover with smooth bottom plate. Includes center hose bed divider with notched rear (as applicable), fill tower(s) access door(s) (as applicable), gas shocks, positive hold opens/hold closed at rear, (2) grab handles front and (2) hand rails rear.	$3,386

3305-0012	(4) piece aluminum hosebed cover. Includes center hosebed divider with notched rear, fill tower(s) access door(s) (as applicable), (2) gas shocks, positive hold-opens/hold-closed at center and at the rear, (6) grab handles- (4) fwd cover and (2) fwd area of rear cover with (2) handrails on rear cover.	$6,045
3305-0013	(2) piece aluminum hose bed cover with smooth bottom plate. Includes dividerless cross structure, fill tower(s) access door(s) (as applicable), (2) gas shocks, positive hold-opens/hold-closed at the rear, (2) grab handles (fwd) and (2) hand rails (rear).	$3,499
3305-0014	(4) piece aluminum hosebed cover. Includes divider-less cross structure, fill tower(s) access door(s) (as applicable), (2) gas shocks, positive hold-opens/hold-closed at center and at the rear, (6) grab handles- (4) fwd cover and (2) fwd area of rear cover with (2) handrails rear of each cover.	$6,353
3305-0015	Vinyl [#COL] speedlay front cover.	$242
3305-0016	Vinyl [#COL] speedlay side covers.	$205
3305-0017	Nylon black strap on running board suction tray (EA). Location: [#LOC].	$81
3305-0021	Vinyl [#COL] hose bed cover with side bungee cords and attached rear flap(s).	$1,220
3305-0022	Vinyl rear cover for diamond plate hose bed cover. Color: [#COL].	$272
3305-0023	Nylon black cargo net at rear of diamond plate or vinyl hose bed cover or similar.	$571
3305-0024	Vinyl [#COL] side covers for diamond plate crosslay cover.	$193
3305-0025	Nylon black cargo net on sides for crosslay cover.	$228
3305-0026	Nylon black cargo net on front of speedlay.	$361
3305-0027	Nylon black cargo net on sides of speedlay.	$265
3305-0028	Vinyl [#COL] cover for running board suction tray. Location: [#LOC].	$193
3305-0029	Nylon black strap on running board suction tray (EA). For use with rolled hose. Location: [#LOC]	$93
3305-0032	Cover for side ladder tunnel. To include mounting bracket over upper ladders in pump module and black vinyl cover. Cover to be removable for access to pump area.	$410
3305-0033	Vinyl access cover for fill tower(s).	$202
3305-0034	Vinyl [#COL] hose bed cover without attached rear flap(s). Requires rear cover option.	$743
3305-0035	Diamond plate hosebed deflector. Located at front of hosebed area with angled front edge. To be hinged along forward edge with "T" style hold-downs. To cover all fill towers. The NFPA hosebed light (as applicable) to be located on trailing edge.	$518
3305-0036	TM control panel [#COL] vinyl cover. Includes lower twist locks and velcro front, side and top securing.	$405
3305-0037	Diamond plate generator cover with expanded metal on top and all (4) sides.	$1,027
3305-0038	Vinyl [#COL] crosslay cover top only.	$262
3305-0039	Diamond plate speedlay cover. Includes fixed rear portion on rear of module (over backboard storage area, if applicable) and hold-open with grab handles on forward area.	$661
3305-0040	Nylon black strap with clip release on running board suction tray (EA). Location: [#LOC]	$144
3305-0041	Vinyl [#COL] hosebed cover with side twist locks and bungee cord attached rear flap(s).	$1,220
3305-0042	Vinyl Red cover for officer side compartment top boxes. Includes snaps on hosebed side and velcro on the sides and outboard edge for securing. Includes notch for overhead ladder rack.	$405
3305-0043	Vinyl Red cover for driver side compartment top box. Includes snaps on hosebed side and velcro on the sides and outboard edge for securing.	$405
3305-0044	Hinged bustin grating cover each side of dunnage pan. Includes permanent mount bustin grating cover over center of dunnage pan. Diamond plate cover to be attached over officer side mounted bustin grating.	$1,068
3305-0045	Diamond Plate Storage Pan Cover. Includes (1) grab handle and (2) hold downs. Hinge to the front of the storage pan.	$851
3305-0046	Diamonda Plate Battery Cover. Includes grab handle and hold downs. Hinge to the front of the storage pan. Includes divider wall to isolate batteries in pan.	$318
3305-0051	Diamonda Plate Battery Cover. Includes grab handle and hold downs. Hinge to the officer side of the storage pan. Includes divider wall to isolate batteries in pan.	$318
3305-0052	Vinyl [#COL] hose bed cover with side snaps and bungee cord attached rear flap(s).	$1,220
3305-0053	Diamond plate cover for the dunnage pan area. Includes permanently mounted panel under ladder rack and hinged panel over remaining pan. Includes (2) butterfly latches to hold closed. Hinge to the rear of dunnage pan.	$751
3305-0055	Diamonda plate battery cover to protect batteries. Cover includes louvers. Location: [#LOC].	$201
3305-0057	ROM roll-up hose bed cover with satin finish. Inlcudes a momentary switch located [#LOC] and to be easily accessible from the ground. Includes enclosing the operator housing.	$6,668
3305-0058	Nylon black cargo cover for running board suction tray. Location: [#LOC].	$361
3305-0060	Diamond plate cover for running board suction tray(s). Includes push-button latches and gator grip. Location(s): [#LOC].	$382
3305-0064	Nylon black strap with aluminum quick-release buckle for hose tray. Strap to attach to side walls of tray down low as applicable. Location: [#LOC].	$118
3305-0065	Compartment underbody with slide-out tray. Includes drop down front door with D-ring latch(es). [#LOC]	$2,254
3305-0068	Vinyl [#COL] hosebed cover with attached rear flap(s). Cover to have snaps and velcro along front (no awning attachment) and sides. No twist locks. The rear bungees to be tie-in versus sown (use ilets sized to secure a looped and tied bungee). Bungee to be easily removed and replaced (by fire department) in field.	$1,485
3305-0069	Diamond plate speedlay cover. Includes fixed rear portion on rear of module (over backboard storage area, if applicable) and hold-open with grab handles on rearward area.	$661
3305-0070	Diamond plate portable pump cover.	$1,251
3305-0071	(4) piece aluminum hosebed cover. Includes divider-less cross structure, fill tower(s) access door(s) (as applicable), (2) gas shocks, positive hold-opens/hold-closed at center and at the rear, (6) grab handles- (4) fwd cover and (2) fwd area of rear cover with (2) handrails rear of each cover. For use with Rear Mount Pumper.	$6,465
3305-0074	Additional reflective white strip to be sewn centered on nylon black strap for running board tray(s).	$67

3305-0078	Vinyl [#COL] hosebed cover with attached rear flap(s). Includes mechanical attachements at the forward body, the four corners of the main and rear body/pump module and velcro along the sides.	$1,073
3305-0080	Diamond plate cover for running board suction tray(s). Includes push-button latches and gator grip. Includes cords to prevent covers from dropping to the ground when removed. Location(s): [#LOC].	$421
3305-0082	(4) piece aluminum hose bed cover. Includes center hose bed divider with notched rear, fill tower(s) access door(s) (as applicable), (2) gas shocks, positive hold-opens/hold-closed at center and at the rear, (6) grab handles- (4) fwd cover and (2) fwd area of rear cover with (2) hand rails on rear cover. A landing platform (sized and positioned as required with overall rear end configuration) with embossed diamond plate surface will be centrally located at the upper rear of the apparatus to assist with hose bed cover operations.	$3,160
3305-0083	(4) piece aluminum hose bed cover. Includes dividerless cross structure, fill tower(s) access door(s) (as applicable), (2) gas shocks, positive hold-opens/hold-closed at center and at the rear, (6) grab handles- (4) fwd cover and (2) fwd area of rear cover with (2) hand rails on rear cover. A landing platform (sized and positioned as required with overall rear end configuration) with embossed diamond plate surface will be centrally located at the upper rear of the apparatus to assist with hose bed cover operations.	$4,315
3305-0086	(4) piece aluminum hosebed cover for use with rear mount body. Includes center hosebed divider with notched rear, fill tower(s) access door(s) (as applicable), (2) gas shocks, positive hold-opens/hold-closed at center and at the rear, (6) grab handles- (4) fwd cover and (2) fwd area of rear cover with (2) handrails on rear cover. A landing platform (sized and positioned as required with overall rearend configuration) with embossed diamond plate surface will be centrally located at the upper rear of the apparatus to assist with hosebed cover operations.	$3,470
3305-0087	(4) piece aluminum hosebed cover for use with rear mount body. Includes divider-less cross structure, fill tower(s) access door(s) (as applicable), (4) gas shocks, positive hold-opens/hold-closed at center and at the rear, (6) grab handles- (4) fwd cover and (2) fwd area of rear cover with (2) handrails on rear cover. A landing platform (sized and positioned as required with overall rearend configuration) with embossed diamond plate surface will be centrally located at the upper rear of the apparatus to assit with hosebed cover operations.	$5,153
3305-0088	(4) piece aluminum hosebed cover with smooth bottom plate. Includes center hosebed divider with notched rear, fill tower(s) access door(s) (as applicable), (2) gas shocks, positive hold-opens/hold-closed at center and at the rear, (6) grab handles- (4) fwd cover and (2) fwd area of rear cover with (2) handrails on rear cover.	$4,538
3305-0089	(4) piece aluminum hose bed cover with smooth bottom plate. Includes dividerless cross structure, fill tower(s) access door(s) (as applicable), (2) gas shocks, positive hold-opens/hold-closed at center and at the rear, (6) grab handles- (4) fwd cover and (2) fwd area of rear cover with (2) hand rails on rear cover.	$4,358
3305-0093	Vinyl fire retardent [#COL] hosebed cover with twist locks fasteners and bungee cord attached rear flap(s).	$1,415
3305-0094	Fire Retardent Vinyl [#COL] crosslay cover with attached side flaps.	$613
3305-0095	Booster Reel Cover. Cover to have roll-top access door with handle and held close with rubber latch.	$1,780
3305-0101	(4) piece aluminum hosebed cover. Includes center hosebed divider with notched rear, fill tower(s) access door(s) (as applicable), (4) gas shocks, positive hold-opens/hold-closed at center and at the rear, (6) grab handles- (4) fwd cover and (2) fwd area of rear cover with (2) handrails on rear cover. Includes center bracing between forward and rearward covers for mounting of gas shocks for rearward covers.	$3,387
3305-0102	Heavy duty Vinyl Black wheel well cover located in compartments L2 and R2. Cover to be full width drop down protector to prevent damage to painted surfaces below the wheel well compartments.	$613
3305-0118	Vinyl [#COL] [#LOC] storage tunnel front cover.	$242
3305-0122	Vinyl [#COL] upper hose storage cover with attached rear flap located above the ladder tunnel.	$308
3305-0123	Powered (2) piece aluminum hose bed cover. Includes center hose bed divider with notched rear, fill tower(s) access door(s) (as applicable), (2) electric actuators, (2) grab handles forward area of cover with (2) hand rails on rearward area of cover. Partition at front of hose bed to cover electric actuators (approx 4" loss in hose bed length). Includes controls, through VMUX system (if so equipped): (2) momentary controls - (1) left cover and (1) right cover.	$6,156
3305-0124	Vinyl [#COL] crosslay cover with attached side flaps. Cover to have velcro on the top IPO snaps.	$308
3305-0125	(2) piece aluminum hose bed cover. Includes center hose bed divider with notched rear, fill tower(s) access door(s) (as applicable), (2) gas shocks, positive hold-opens/hold-closed at rear, (2) grab handles on fwd area of cover with (2) hand rails on rear of cover. A landing platform (sized and positioned as required with overall rear end configuration) with embossed diamond plate surface will be centrally located at the upper rear of the apparatus to assist with hose bed cover operations.	$3,160
3305-0128	Vinyl rear cover for diamond plate hosebed cover. Cover to be attached with snaps. Color: [#COL].	$383
3305-0130	Vinyl [#COL] crosslay cover with attached side flaps. Cover to have snaps and velcro on the top. No twist locks. The side bungees to be tie-in versus sown (use ilets sized to secure a looped and tied bungee). Bungee to be easily removed and replaced (by fire department) in field.	$522
3305-0136	(2) piece aluminum hosebed cover. Includes center hosebed divider with NO notched rear, fill tower(s) access door(s) (as applicable), (2) gas shocks, positive hold-opens/hold-closed at rear, (2) grab handles on fwd area of cover with (2) handrails on rear of cover. A FULL width step (sized and positioned as required with overall rearend configuration) with embossed diamond plate surface will be located at the upper rear of the apparatus to assist with hosebed cover/hose loading operations.	$3,742

3305-0137	Powered (2) piece aluminum hosebed cover. Includes center hosebed divider with notched rear, fill tower(s) access door(s) (as applicable), (2) eletric actuators, (2) grab handles forward area of cover with (2) handrails on rearward area of cover. Partition at front of hosebed to cover electric actuators (approx 4" loss in hosebed length). Includes control panel on officer side rear compartment face with (3) momentary switches: (1) master on/off, (1) left cover and (1) right cover.	$7,220
3305-0138	Stokes Basket storage box. Located on top of the driver side hosebed cover. To hold (1) stokes basket with access from a horizontally hinged lift-up diamond plate door with a push-button latch.	$886
3305-0140	Split style diamond plate hosebed cover. Covers to be low profile and light weight with cross support structure on underside. Covers to lay flat and stow against center hosebed storage box. Includes low profile hold-open and chrome grab handles at the front and rear (no stanchion type handrails to be used).	$1,934
3305-0141	Diamond plate hosebed deflector located at front of hosebed area with angled front edge. To be hinged along forward edge with "T" style hold-downs.	$493
3305-0142	Vinyl red side covers for diamond plate crosslay cover. Covers to attach to the DP cover with snaps. The lower corners to have bungee cords. Cords are to be tie-in versus sown. Flaps to have eyelets sized to secure individual looped and tied bungees. Cords to be easily removed and replaced (by fire department) in field.	$315
3305-0143	Vinyl rear cover for diamond plate hosebed cover. Cover to attach to the DP cover with snaps. The lower edge to have bungee cords. Cords are to be tie-in versus sown. Flap to have eyelets sized to secure individual looped and tied bungees. Cords to be easily removed and replaced (by fire department) in field. Color: Red	$399
3305-0144	(4) piece aluminum hosebed cover. Includes center hosebed divider with notched rear, fill tower(s) access door(s) (as applicable), (2) gas shocks, positive hold-opens/hold-closed at center and at the rear, (8) handrails - (4) forward cover and (4) rearward cover. The enhanced extended landing area(s) will be used to assist with hosebed cover operations. For use with Enhanced Extended Rescue Pumper only.	$3,430
3305-0147	Nylon yellow strap with aluminum quick-release buckle for hose tray. Strap to attach to side walls of tray down low as applicable. Location: [#LOC].	$118
3305-0148	Cover for generator in hosebed storage pan. For max air flow and protection of main generator the side to be open and the upper flat surface to be bustin grating. Cover to be to officer side and hinged forward with gas shock and mechanical hold-downs. Hydraulic connections next to main generator to have a removable diamond plate cover.	$739
3305-0149	Nylon yellow cargo net on sides for crosslay cover. Cover to have snaps in place of bungees.	$320
3305-0150	Nylon yellow cargo net at rear of diamond plate or vinyl hosebed cover. Cover to have snaps in place of bungees.	$611
3305-0151	2-piece aluminum hose bed cover, fill tower(s) access door(s) (as applicable), positive hold opens/hold closed, (2) hand rails rear, Wildland	$3,520
3305-0152	Vinyl speedlay cover. For use with individual preconnect module with side by side storage. Includes mechanical hold-downs on top outer corners and quick-release side flap hold downs. Cover color: [#COL].	$357
3305-0157	Nylon yellow cargo net on sides of speedlay. Covers to have snaps in place of bungees.	$308
3305-0158	Diamond Plate Booster Reel Cover. Includes (1) grab handle and (2) hold downs. Hinge towards the front of the storage pan. Includes partitions located around booster reel.	$1,545
3305-0159	Hosebed cover hold open devices to be thru bolted on side of 3x3 hosebed side extrusions.	$118
3305-0163	Powered (2) piece aluminum hosebed cover with smooth bottom plate. Includes center hosebed divider with notched rear, fill tower(s) access door(s) (as applicable), (2) electric actuators, (2) grab handles forward area of cover with (2) handrails on rearward area of cover. Partition at front of hosebed to cover electric actuators (approx 4" loss in hosebed length). Includes control panel on driver side rear body with (3) momentary switches: (1) master on/off, (1) left cover and (1) right cover.	$6,155
3305-0164	Nylon black cargo net hosebed cover with attached rear flap(s).	$1,140
3305-0166	Nylon black strap with aluminum quick-release buckle for hose tray. Strap to attach to side walls of tray down low as applicable. For use with rolled hose. Location: [#LOC].	$129
3305-0168	Vinyl [#COL] hose bed cover with side bungee cords without attached rear flap(s). Requires rear cover option.	$1,087
3305-0169	Diamond plate cover for the dunnage pan area. Includes (2) butterfly latches to hold closed. Hinge to the rear of dunnage pan.	$751
3305-0170	Spring hold down for hose tray. Spring to attach to side wall of tray with scuff plate on pump panel. Location: [#LOC].	$156
3305-0171	Diamond plate speedlay cover (3/16" diamond plate). Includes fixed rear portion on rear of module (over backboard storage area, if applicable) and hold-open with grab handles on rearward area.	$690
3305-0172	Diamond plate booster reel cover with open sides for hose deployment.	$915
3305-0174	Single diamond plate cover for the crosslay area. Includes applicable grab handle(s) and (2) hold downs. Cover to be embossed diamond plate.	$670
3305-0175	Vinyl fire retardent [#COL] hose bed cover with attached rear flap(s).	$1,096
3305-0176	Vinyl fire retardent [#COL] side covers for diamond plate crosslay cover.	$241
3305-0177	Vinyl fire retardent [#COL] cover for running board suction tray. Location: [#LOC].	$241
3305-0178	One piece vinyl fire retardent cover for top mount pump panel opening. Top of vinyl fire retardent cover outboard corners to have twist locks with velcro around permetier. Color to be [#COL].	$844
3305-0179	(2) piece aluminum hosebed cover. Includes divider-less cross structure, fill tower(s) access door(s) (as applicable), (2) gas shocks, positive hold-opens/hold-closed at rear, (2) grab handles on fwd area of cover with (2) handrails on rear of cover. A landing platform (sized and positioned as required with overall rearend configuration) with embossed diamond plate surface will be centrally located at the upper rear of the apparatus to assist with hosebed cover operations.	$4,006

3305-0180	Vinyl [#COL] hose bed cover with side bungee cords and attached rear flap(s). Includes large pull tabs to ease securing cover while wearing gloves.	$1,332
3305-0181	Vinyl [#COL] hosebed cover with side twist locks with Velcro in between the twist locks and bungee cord attached rear flap(s).	$1,461
3305-0182	Hold open retaining pin for aluminum crosslay (single or bi-fold) cover. Locate as required based off options on module.	$153
3305-0183	Vinyl [#COL] crosslay cover with attached side flaps with bungee cord.	$384
3305-0184	Vinyl [#COL] side covers for diamond plate crosslay cover. Includes large pull tabs to ease securing end flaps while wearing gloves.	$193
3305-0185	Nylon red cargo cover for running board suction tray. Location: [#LOC].	$389
3305-0186	Nylon red cargo net on sides for crosslay cover.	$254
3305-0187	Nylon red cargo net at rear of diamond plate or vinyl hose bed cover.	$604
3305-0188	Nylon black strap with footman loops and Velcro closure to secure hose. Location: [#LOC].	$93
3305-0189	The rear flap(s) of the hosebed cover shall be upgraded to add weight to the bottom of the rear vertical flap(s).	$545
3305-0190	(4) piece aluminum hosebed cover. Includes off center hosebed divider located 8" left of center (NOT CENTERED) with notched rear, fill tower(s) access door(s) (as applicable), (4) gas shocks, positive hold-opens/hold-closed at center and at the rear, (6) grab handles- (4) fwd cover and (2) fwd area of rear cover with (2) handrails on rear cover. Includes center bracing between forward and rearward covers for mounting of gas shocks for rearward covers.	$3,934
3305-0191	Vinyl rear cover for diamond plate hose bed cover using California Type 3 straps IPOS. Color: [#COL].	$415
3305-0193	Hold open device(s) shall be provided. Rubber plunger type hold downs(s) shall hold the aluminum crosslay cover(s) (single or bi-fold) in the open position.	$212
3305-0194	Bi-Fold diamond plate cover for the crosslay area. Includes applicable grab handles, (2) hold downs and magnetic door ajar switch(s). Non-aerial applications to be tagged as a non-stepping surface.	$1,023
3305-0195	(4) piece aluminum hose bed cover. Includes divider-less cross structure, fill tower(s) access door(s) (as applicable), (2) gas shocks, positive hold-opens/hold-closed at center and at the rear, (6) grab handles- (4) fwd cover and (2) fwd area of rear cover with (2) hand rails on rear cover. A landing platform (10" in depth, the width shall be sized and positioned as required with overall rear end configuration) with embossed diamond plate surface will be centrally located at the upper rear of the apparatus to assist with hose bed cover operations.	$4,315
3305-0196	Diamond plate cover for the dunnage pan area. Includes (2) butterfly latches to hold closed and (1) grab handle mounted between butterfly latches. Hinge to the front of dunnage pan.	$751
3305-0197	Hose bed deflector. The diamond plate deflector shall be bolted in place on the front of hose bed area with an angled top edge to shield rain and wind from the frontal area of the hose bed.	$518
3305-0199	Double diamond plate cover for each outboard hose storage area on the Low Hosebed body. Includes applicable grab handle(s) and (2) hold downs on each cover. Covers to be embossed diamond plate and hinged outboard.	$1,533
3305-0200	Vinyl [#COL] end covers for upper outboard hose storage of the hosebed.	$193
3305-0201	Bi-Fold 1/8" smooth plate cover for the crosslay area. Includes applicable grab handles and (2) hold downs. The cover to be painted black durabak. Non-aerial applications to be tagged as a non-stepping surface.	$1,079
3305-0202	(4) Piece aluminum smooth plate with black Scorpion coating (IPOS diamond plate) hosebed cover for use with rear mount body. Includes center hosebed divider with notched rear, fill tower(s) access door(s) (as applicable), (2) gas shocks, positive hold-opens/hold-closed at center and at the rear, (6) grab handles- (4) fwd cover and (2) fwd area of rear cover with (2) handrails on rear cover. A landing platform (sized and positioned as required with overall rear end configuration) with aluminum smooth plate with black Scorpion coating (IPOS diamond plate) surface will be centrally located at the upper rear of the apparatus to assist with hosebed cover operations.	$3,913
3305-0203	Nylon black strap with aluminum quick-release buckle for tailboard hose tray(s). Strap to attach to side walls of tray down low as applicable.	$118
3305-0204	(4) piece aluminum hosebed cover for use with rear mount body. Includes center hosebed divider with notched rear, fill tower(s) access door(s) (as applicable), (2) gas shocks, positive hold-opens/hold-closed at center and at the rear, (6) grab handles- (4) fwd cover and (2) fwd area of rear cover with (2) handrails on rear cover. A landing platform (sized and positioned as required with overall rearend configuration) with embossed diamond plate and gator grip surface will be centrally located at the upper rear of the apparatus to assist with hosebed cover operations.	$3,470
3305-0205	Vinyl [#COL] side covers for diamond plate crosslay cover. Covers to attach to the DP cover with snaps. The lower corners shall be secured in place using California type straps (2) each side IPOS. These straps shall function to allow each strap to be looped around the horizontal crosslay roller on each side as part of the attach system.	$390
3305-0206	Vinyl [#COL] hose bed cover using Nitrogen/Oxygen type straps (2) attach positions each side (4) total to secure the rear flap(s) IPOS. The upper straps shall be sewn in place leaving the ratchet clamp approximately half way or mid height of the rear flap(s). The bottom straps shall be fastened to a strap tie down mounted slightly above the horizontal handrail in line with the sewn in straps above (4) total top and (4) total bottom. The bottom straps shall feed directly above to the ratchet clamps (sewn in) as part of the attach/securing system.	$1,664
3305-0208	Cargo net for inside compartment for containing cribbing in compartment when door is opened. Net to permanently fasten on rearward wall just inside door opening and fasten with buckle straps on forward wall just inside door opening. Cargo netting will be 3" x 3" squares. Location: [#LOC].	$839
3305-0209	Smooth plate speedlay cover painted gray durabak. Includes fixed rear portion on rear of module (over backboard storage area, if applicable) and hold-open with grab handles on rearward area.	$845

3305-0210	Diamond plate cover for the dunnage pan area. Includes permanently mounted panel under ladder rack and hinged panel over remaining pan. Includes (2) butterfly latches to hold closed to include gas spring(s) as hold open device. Hinge to the rear of dunnage pan.	$785
3305-0211	(2) piece aluminum hosebed cover. Includes center hosebed divider with NO notched rear, fill tower(s) access door(s) (as applicable), (2) gas shocks, positive hold-opens/hold-closed at rear, (2) grab handles on fwd area of cover with (2) handrails on rear of cover.	$3,742
3305-0212	Vinyl fire retardent [#COL] hosebed cover with twist locks fasteners and bungee cord attached rear flap(s). Cover to be partial hosebed cover leaving hosebed walkway area uncovered. To extend full length of the hosebed from roof top compartment on the side to divider against walkway in the middle and to hosebed storage pan rearward mounting flange at the front.	$1,415
3305-0213	(4) Piece aluminum hose bed cover. Includes divider-less cross structure, fill tower(s) access door(s) (as applicable), (2) gas shocks, custom positive hold-open devices at the rear and separate hold closed devices (see photos in file), (6) grab handles- (4) fwd cover and (2) fwd area of rear cover with (2) 18" hand rails on rear cover mounted inboard not to interfere with upper warning lights.	$4,405
3305-0214	Nylon black cargo net at rear of diamond plate or vinyl hose bed cover. Notched for hosebed storage compartment(s) and door(s) as required.	$571
3305-0215	Vinyl [#COL] hose bed cover with attached rear flap(s). Cover to have snaps and velcro along front (NO awning attachment) and velcro along sides. No twist locks.	$877
3305-0217	Vinyl [#COL] hosebed cover with attached rear flap(s). Cover to have bungees on sides ipo velcro. Bungee to be easily removed and replaced (by fire department) in field.	$1,485
3305-0218	(4) piece aluminum smooth plate hosebed cover (flat profile with no pitch) painted with Durabak black coating. Includes center hosebed divider with notched rear, notch for boom support, fill tower(s) access door(s) (as applicable), (2) gas shocks, positive hold-opens/hold-closed at center and at the rear, (6) grab handles- (4) fwd cover and (2) fwd area of rear cover with (2) handrails rear of each cover. The enhanced extended landing area(s) will be used to assist with hosebed cover operations. For 50' Teleboom with Enhanced Extended Rescue.	$7,305
3305-0219	(2) piece light weight aluminum hose bed cover. Includes center hose bed divider with notched rear (as applicable), fill tower(s) access door(s) (as applicable), gas shocks, positive hold opens/hold closed at rear, (2) grab handles front and (2) hand rails rear.	$3,089
3305-0220	(2) piece light weight aluminum hose bed cover. Includes dividerless cross structure, fill tower(s) access door(s) (as applicable), (2) gas shocks, positive hold-opens/hold-closed at the rear, (2) grab handles (fwd) and (2) hand rails (rear).	$3,089
3305-0222	Vinyl rear cover for diamond plate hosebed cover. Cover to be attached with bungee cords at all attachment positions. Color: [#COL].	$387
3305-0223	Nylon black cargo net on sides of speedlay. Cover to be attached with bungee cords at all attachment positions.	$332
3305-0227	Vinyl fire retardant rear cover for diamond plate hose bed cover. Color: [#COL].	$299
3305-0228	Fire Retardent Vinyl [#COL] side covers for diamond plate crosslay cover.	$385
3305-0231	Powered (2) piece aluminum hosebed cover with notch built into the officer side rear corner (to miss monitor are mounted). Includes center hosebed divider with notched rear, fill tower(s) access door(s) (as applicable), (2) electric actuators, (2) grab handles forward area of cover with (2) handrails on rearward area of cover. Partition at front of hosebed to cover electric actuators (approx 4" loss in hosebed length). Includes control panel on left rear of body above taillights with (3) momentary switches: (1) master on/off, (1) left cover and (1) right cover.	$7,045
3305-0234	Powered (2) piece aluminum hose bed cover. Includes center hose bed divider with notched rear, fill tower(s) access door(s) (as applicable), (2) electric actuators, (2) grab handles forward area of cover with (2) hand rails on rearward area of cover. A landing platform (sized and positioned as required with overall rear end configuration) with embossed diamond plate surface will be centrally located at the upper rear of the apparatus to assist with hose bed cover operations. Partition at front of hose bed to cover electric actuators (approx 4" loss in hose bed length). Includes (2) momentary controls - (1) left cover and (1) right cover.	$6,386
3305-0238	Vinyl [#COL] hose bed covers with attached rear flaps. Two Seperate covers for bi-level hose bed sides stepped to clear overhead rack assembly.	$1,053
3305-0241	Bi-fold style diamond plate cover for running board suction tray(s) hinged outboard from pump panels. Includes butterfly latches and gator grip. Location(s): [#LOC].	$421
3305-0243	Vinyl [#COL] crosslay cover with attached side flaps. Includes side snaps.	$383
3305-0244	Cargo net: Black nylon with 2 inch openings, mechanical type hold downs and notch to accommodate pan mounted options if applicable. Locate in upper eMAX forward module roof pan area.	$1,268
3305-0246	Smooth plate aluminum rear covers for the application of applicable chevrons mounted on the ends of the top outboard hose bed storage areas. Includes vertical hinge each side and a non-locking D-ring latch. Doors to be wired to door ajar circuit. Storage areas to be open to the top and shall be used for misc. equipment to be added/secured as applicable to NFPA by customer/dealer. Not identified to be used as loose hose storage.	$817
3305-0247	Diamond plate vertically hinged door each side of the 2.5" crosslay hinge rearward. Includes thumb latch and wiring for door ajar switch.	$379
3305-0248	(2) piece aluminum hose bed cover. Includes dividerless cross structure, fill tower(s) access door(s) (as applicable), (2) gas shocks, positive hold-opens/hold-closed at the rear, (2) grab handles (fwd), (2) grab handles rear and (2) hand rails (rearend).	$4,411
3305-0250	Diamond plate speedlay cover painted gray Zolatone. Includes fixed rear portion on rear of module (over backboard storage area, if applicable) and hold-open with grab handles on rearward area.	$886

3305-0251	Powered (2) piece aluminum smooth plate hosebed cover and painted black Durabak. Includes center hose bed divider with notched rear, fill tower(s) access door(s) (as applicable), (2) electric actuators, (2) grab handles forward area of cover with (2) hand rails on rearward area of cover. Partition at front of hose bed to cover electric actuators (approx 4" loss in hose bed length). Includes controls, through VMUX system (if so equipped): (2) momentary controls - (1) left cover and (1) right cover.	$7,695
3305-0252	Nylon black cargo net hosebed cover with side bungee cords and attached rear flap(s). Rear Cover notched for hosebed storage compartment(s) and door(s) as required.	$1,618
3305-0253	One piece vinyl cover for top mount pump panel opening. Top of vinyl cover outboard corners to have twist locks with velcro around permetier. Color to be [#COL].	$844
3305-0259	Nylon black cargo net at rear of diamond plate or vinyl hose bed cover w/(2) aluminum quick release buckles.	$801
3305-0260	Nylon black cargo net end flaps w/(2) aluminum quick release buckles on each side for crosslay cover.	$570
3305-0263	Removable diamond plate cover for the crosslay area. Includes applicable grab handles and aluminum fabricated brackets with safety pins for hold downs. Aerial applications to be tagged as a non-stepping surface.	$900
3305-0264	Diamond plate cover for running board suction tray(s). Includes butterfly latches and gator grip. Includes cords to prevent covers from dropping to the ground when removed. Location(s): [#LOC].	$421
3305-0265	Vinyl rear cover for diamond plate hose bed cover. The top of the cover shall be mechanically attached to the rear hose bed cover extrusion with over lapping flaps in the center secured with velcro. The lower portion of the cover shall be secured in place with heavy duty nylon straps. The lower portion fasteners shall be mounted at pick up. Color: Red.	$399
3305-0267	(4) piece aluminum hose bed cover. Includes divider-less cross structure, fill tower(s) access door(s) (as applicable), (4) 153 lb gas shocks, positive hold-opens/hold-closed at center and at the rear, (6) grab handles- (4) fwd cover and (2) fwd area of rear cover with (2) hand rails on rear cover. A landing platform (10" in depth, the width shall be sized and positioned as required with overall rear end configuration) with embossed diamond plate surface will be centrally located at the upper rear of the apparatus to assist with hose bed cover operations.	$4,399
3305-0268	Diamond plate cover for the dunnage pan area. Includes (2) butterfly latches to hold closed and (2) gas shocks as hold open device. Cover to hinge to the rear of dunnage pan and open a full 90 deg.	$785
3305-0271	Nylon black cargo net end cover, for driver side upper outboard hose storage of the hosebed.	$146
3305-0274	Vinyl black hose bed cover with attached rear flap, on one side only, to the top of the hose bed storage compartment.	$877
3305-0276	Vinyl red crosslay cover top with attached nylon red cargo net on each side of cover.	$588
3305-0277	Vinyl rear cover for diamond plate hose bed cover. Cover shall attach to hard cover optioned and have weighted bottom edge with additional shock cord attaching cords to comply with NFPA current version. Cover shall be split in the center along hard cover center or divider at center of hose bed. D&S custom covers brand NFPA compliant with reflective yellow and red "A" chevrons.	$878
3305-0278	The hosebed cover divider shall be located offset to one side per the instructions on the body layout.	$170
3305-0280	Nylon black strap with aluminum quick-release buckle for hose tray. Location: to be mounted at final inspection. [#LOC].	$118
3305-0281	(4) piece aluminum hose bed cover. Includes center hose bed divider with notched rear, fill tower(s) access door(s) (as applicable), (2) gas shocks, positive hold-opens/hold-closed at center and at the rear, (6) grab handles- (4) fwd cover and (2) fwd area of rear cover with (2) hand rails on rear cover. Requires an Intermediate rear step located at the upper rear of the apparatus to assist with hose bed cover operations.	$3,160
3305-0282	Vinyl black hose bed cover with nylon black strap with footman loops and Velcro closure to secure hosebed cover without attached rear flap(s). Requires rear cover option.	$1,087
3305-0283	Nylon black cargo net at rear of diamond plate or vinyl hosebed cover. Cover to have nylon black strap with footman loops and Velcro closure to secure hosebed end flap.	$611
3305-0284	Diamond plate hose bed deflector. Aluminum tread plate .25 in thick. Located at front of hosebed area with angled front edge. The NFPA hosebed light (as applicable) to be located on trailing edge and provisions added to secure hose bed vinyl cover along forward edge below deflector. Top of shield to extend upwards approx. 5 in. above hose bed top extrusion and approx. 10.5 in. rearward to trailing edge from front of body.	$310
3305-0285	Powered (2) piece aluminum hosebed cover with smooth bottom plate. Includes center hosebed divider with notched rear, fill tower(s) access door(s) (as applicable), (2) electric actuators, (2) grab handles forward area of cover with (2) handrails on rearward area of cover. Partition at front of hosebed to cover electric actuators (approx 4" loss in hosebed length). Includes control panel [#LOC] with (3) momentary switches: (1) master on/off, (1) left cover and (1) right cover.	$6,155
3305-0286	Cover for side ladder tunnel forward end. Cover shall be fabricated from flat smooth plate aluminum and be easily removable for access to the forward end of the ladder tunnel for clean out. Usable only on body configurations where the ladders do NOT extend into pump module.	$280
3305-0287	(4) piece aluminum hosebed cover (flat profile with no pitch). Includes center hosebed divider with notched rear, fill tower(s) access door(s) (as applicable), (2) gas shocks, positive hold-opens/hold-closed at center and at the rear, (6) grab handles- (4) fwd cover and (2) fwd area of rear cover. (2) handrails on back lip of hosebed cover due to overall height restriction. A landing platform (sized and positioned as required with overall rear end configuration) with embossed diamond plate surface will be centrally located at the upper rear of the apparatus to assist with hose bed cover operations.	$3,467
3305-0291	Nylon red cargo net on sides of speedlay.	$308
3305-0292	Removable diamond plate cover for the hydraulic power supply for E-ONE 2 arm ladder rack for use in top side dunnage or storage pan mounting applications. Includes flush access door with thumb latch to inspect or fill hydraulic reservoir. To include NO STEP tags as applicable.	$380

3305-0293	(2) piece aluminum smooth platehose bed cover and painted black Durabak.. Includes dividerless cross structure, fill tower(s) access door(s) (as applicable), (2) gas shocks, positive hold-opens/hold-closed at the rear, (2) grab handles (fwd) and (2) hand rails (rear).	$5,394
3305-0294	Vinyl red cover for fire extinguisher box. Cover to attach to the shelf lip with snaps. The lower corners to have bungee cords.	$315
3305-0296	(2) piece aluminum hose bed cover and painted black Durabak with smooth bottom plate. Includes center hose bed divider with notched rear (as applicable), fill tower(s) access door(s) (as applicable), gas shocks, positive hold opens/hold closed at rear, (2) grab handles front and (2) hand rails rear.	$4,070
3310-0021	Step flop down rear 24" wide rung type (EA).	$583
3310-0039	Cut-out on compartment floor for exhaust and cover plate for hydraulic lines.	$493
3310-0098	Step fold-down (EA). Location: [#LOC].	$947
3310-0215	Transverse compartment floor to be extended out to door opening in L1.	$428
3315-0006	4-Bottle DOT 6000 PSI breathing air cascade system with air panel, bottle rack and all associated air lines, valves and gauges. Rack and bottles to be located [#LOC].	$18,086
3315-0009	4-Bottle ASME 6000 PSI Breathing Air Cascade System with air panel, bottle rack and all associated air lines, valves and gauges. Rack and botles to be located in [#LOC].	$23,373
3315-0044	Storage rack for four (4) DOT or ASME air bottles. Mounted horizontal in roof top compartments. Locate two (2) each side in roof top compartments for dealer supplied and installed DOT/ASME bottles and Cascade system.	$842
3315-0045	Storage rack for One (1) 4500 nitrogen bottle air bottle. Mounted horizontal above standard bottles (1) B1 and (1) B2.	$608
3320-0005	SCBA Bottle Storage. (4) Cast Product SCBA bottle storage with gasketed doors. (2) each side in rear wheel well area.	$760
3320-0007	SCBA Bottle Storage. (7) E-ONE SCBA bottle storage with hinged doors (doors to match wheel well material) with push button latches. (4) officer side and (3) driver side in wheel well area.	$1,216
3320-0008	SCBA Bottle Storage. (8) E-ONE SCBA bottle storage with hinged doors (doors to match wheel well material) with push button latches. (4) officer side and (4) driver side in wheel well area.	$1,450
3320-0011	SCBA Bottle Storage. (11) E-ONE SCBA bottle storage with hinged doors (doors to match wheel well material) with push button latches. (6) officer side and (5) driver side in wheel well area- (3) FWD and (2) RWD.	$1,634
3320-0012	SCBA bottle storage. (7) E-ONE SCBA bottle storage with hinged stainless steel doors with push-button latches. (4) officer side and (3) driver side in wheel well area.	$1,328
3320-0015	SCBA Bottle Storage. (2) Cast Product SCBA bottle storage with gasketed doors. Located driver side rear wheel well area.	$760
3320-0018	SCBA Bottle Storage. (8) Fire Shopp SCBA bottle storage with hinged doors with push button latches. (4) officer side and (4) driver side in wheel well area.	$1,770
3320-0019	SCBA Bottle Storage. (7) Fire Shopp SCBA bottle storage with hinged doors with push button latches. (4) officer side and (3) driver side in wheel well area.	$1,482
3320-0020	SCBA Bottle Storage. (4) Fire Shopp SCBA bottle storage with hinged doors with push button latches. (2) officer side and (2) driver side in wheel well area.	$1,288
3320-0021	SCBA/Wheel Chock Storage. (2) Cast Product SCBA bottle storage with gasketed doors on driver side in wheel well area. (2) wheel chock storage compartments with hinged doors and push button latches located on officer side in wheel well area. (2) wheel chocks to be stored per compartment. Does not include wheel chocks. Storage doors to match wheel well material.	$3,005
3320-0023	SCBA Storage. (6) Cast Product SCBA bottle storage with gasketed doors. (3) each side rear wheel well area located in center and rearward positions.	$1,138
3320-0030	SCBA Bottle Storage. (8) E-ONE SCBA bottle storage with hinged stainless steel doors with push-button latches. (4) officer side and (4) driver side in wheel well area.	$973
3320-0031	Zico, metal QUIC-STORAGE bottle rack for large bottles for 6.1" to 7.4" cylinder. Locate in [#LOC]. Each unit will have straps to hold the bottle in and all top units will have a flat top. Each unit will be bolted together and be [#COL] PVC coated.	$141
3320-0038	SCBA bottle storage. (2) Fire Shopp style SCBA bottle storage with hinged brushed stainless steel doors with push-button latches. (1) officer side and (1) driver side in the rear wheel well area.	$645
3320-0039	SCBA bottle storage. (3) Fire Shopp style SCBA bottle storage with hinged brushed stainless steel doors with push-button latches. (2) officer side and (1) driver side in the rear wheel well area.	$967
3320-0040	SCBA bottle storage. (4) Fire Shopp style SCBA bottle storage with hinged brushed stainless steel doors with push-button latches. (2) officer side and (2) driver side in the rear wheel well area.	$1,288
3320-0041	SCBA Bottle Storage. (4) Cast Product SCBA bottle storage with gasketed doors with locking latches. (2) each side in rear wheel well area.	$850
3320-0044	SCBA Bottle Storage. (6) E-ONE SCBA bottle storage with hinged stainless steel doors with push button latches. (3) officer side and (3) driver side in wheel well area. There will (2) bottles forward of the rear axle and (1) rearward.	$865
3320-0045	SCBA Bottle Storage. (7) E-ONE SCBA bottle storage with hinged stainless steel doors with push button latches. (4) officer side and (3) driver side in wheel well area.	$920
3320-0047	SCBA Bottle Storage. (2) Cast Product SCBA bottle storage with gasketed doors. Located officer's side rear wheel well area.	$760
3320-0050	SCBA Bottle Storage. (7) E-ONE SCBA bottle storage with hinged polished stainless steel doors with push button latches. (4) officer side and (3) driver side in wheel well area.	$1,640
3320-0052	Stainless steel trim on bottom edge of each SCBA/Extinguisher compartment opening.	$219
3320-0055	SCBA Storage. (6) Fire Shopp SCBA bottle storage with hinged doors with push button latches. (4) Driver side rear wheel well area and (2) officer side (located either side of the rearward tandem wheel).	$1,931
3320-0056	SCBA storage, PVC, large, (3), center rear, Wildland	$303
3320-0057	SCBA storage, PVC, small, (4), center rear, Wildland	$303

3320-0058	SCBA Bottle Storage. (2) Fire Shopp SCBA bottle storage with hinged doors with push button latches. Located centered in officer side wheel well area.	$645
3320-0062	SCBA/Wheel Chock Storage. (1) E-ONE SCBA bottle storage with hinged door (door to match wheel well material) with push button latches. (1) driver side in wheel well area. (3) wheel chock storage compartment with hinged door and push button latch, (1) driver side in forward wheel well area and (2) officer side in forward and rearward wheel well area. (2) wheel chocks to be stored per compartment. Does not include wheel chocks.	$2,763
3320-0065	SCBA Bottle Storage. (6) Fire Shopp SCBA bottle storage with hinged doors with push button latches. (3) officer side and (3) driver side in wheel well area.	$1,386
3320-0066	Zico Bottle rack for large bottles. Locate in roll-out tray in B1 (vertically mounted) 3 wide x 3 deep. Each unit will have straps to hold the bottle in and all top units will have a flat top. Each unit will be bolted together and be Black PVC coated.	$138
3320-0069	PAC Cylinder Mate. Locate in [#LOC]. Each unit will be black in color and have a strap to secure bottle.	$243
3320-0071	SCBA bottle storage for 5.25" diameter high pressure cylinders. (3) dually style SCBA bottle compartments with hinged brushed stainless steel doors and push-button latches for total storage of 6 bottles. (2) officer side and (1) driver side in the rear fender panels.	$1,187
3320-0074	SCBA Bottle Storage. (16) E-ONE SCBA bottle storage with hinged doors (doors to match wheel well material) with push button latches and one aluminum tray for each bottle. (8) officer side and (8) driver side in wheel well area.	$2,280
3320-0076	SCBA Bottle Storage. (2) Cast Product SCBA bottle storage with gasketed doors. Located (1) driver's side forward wheel well area, (1) officer's side rear wheel well area.	$760
3320-0079	SCBA Bottle Storage. (7) Fire Shopp SCBA bottle storage with hinged doors with push button latches (wired to door ajar). (4) officer side and (3) driver side in wheel well area.	$1,997
3320-0080	SCBA Bottle Storage. (2) Fire Shopp SCBA bottle storage with hinged doors with push button latches. Located centered in driver side wheel well area.	$645
3320-0081	Vision Mark tags (2) for driver side wheel well area SCBA bottle storage. Tags to have red letters on white background. (1) Tag forward inboard tube to read "WATER EXTINGUISHER". (1) Tag rearward inboard tube to read "DRY CHEM".	$108
3320-0084	Extinguishers label to be mounted on the Officer's side rear SCBA bottle storage door IPOS.	$41
3320-0085	SCBA bottle storage for 5.25" diameter high pressure cylinders. (4) dually style SCBA bottle compartments with hinged brushed stainless steel doors and push-button latches for total storage of 7 bottles. (2) officer side and (2) driver side in the rear wheel well area. Left side rear door covers the fuel pocket and has single bottle SCBA storage.	$1,512
3320-0089	SCBA Bottle Storage. (4) Fire Shopp SCBA bottle storage with hinged doors with push button latches with locking latches. (2) officer side and (2) driver side in wheel well area.	$1,500
3320-0091	SCBA Bottle Storage. (6) E-ONE SCBA bottle storage with hinged doors (doors to match wheel well material) with push button latches. (3) officer side and (3) driver side in wheel well area. All doors to be hinged forward.	$2,164
3320-0092	PAC Cylinder Mate. Each unit will be black in color and have a strap to hold the bottle in. Locate: Inside rear body, drivers side, on top of counter top in rear most corner.	$243
3320-0093	SCBA bottle storage. (3) Fire Shopp style SCBA bottle storage with hinged brushed stainless steel doors with push-button latches. (2) officer side and (1) driver side in the forward wheel well area.	$967
3320-0094	SCBA Storage. (6) Cast Product SCBA bottle storage with gasketed doors. (3) each side rear wheel well area located in center and forward positions.	$1,138
3320-0099	SCBA Bottle Storage. (7) Fire Shopp SCBA bottle storage with hinged doors with locking push button latches. (4) officer side and (3) driver side in wheel well area.	$1,938
3320-0101	SCBA bottle storage. (7) E-ONE SCBA bottle storage with hinged stainless steel doors with push-button latches. (4) officer side and (3) driver side in wheel well area. Left side rear door also covers the fuel pocket.	$1,435
3320-0103	SCBA Bottle Storage. (7) E-ONE SCBA bottle storage with hinged doors (doors to match wheel well material) with 1/4 turn latches. (4) officer side and (3) driver side in wheel well area.	$1,216
3320-0106	SCBA Bottle/Extinguisher Storage. (8) E-ONE SCBA/Ext. bottle storage with hinged doors (doors to match wheel well material) with push button latches. (4) officer side and (4) driver side in wheel well area. Driver side to accommodate four (4) Scott 45 min 4500 PSI bottles. Officer side to accommodate two(2)Amerex model A411 20# ABC Dry Chem extinguishers and Two(2) Amerex model A240 2.5 gal pressurized water extinguishers. Officer side to load one ABC drychem and One H2O extinguisher in forward storage and same in rearward storage arraged thus to provide space for the different nozzles on extinguishers.	$1,498
3320-0107	SCBA Bottle Storage. (4) Fire Shopp SCBA bottle storage with hinged doors with push button latches. (4) driver side only in wheel well area. Officer side SCBA not to be installed due to rear body plumbing options. Available only on commercial units with forward fuel tanks or custom applications with officer side only fuel fill.	$895
3320-0108	SCBA Storage. (6) Cast Product SCBA bottle storage with gasketed doors. (3) each side rear wheel well area located in center and rearward positions. Note rear bottle tube support brackets to be welded to body IPO bolted.	$1,138
3320-0110	SCBA Bottle Storage. (4) E-ONE SCBA bottle storage with hinged doors (doors to match wheel well material) with push button latches. (4) officer side only.	$726
3320-0111	SCBA Bottle Storage. (4) E-ONE SCBA bottle storage with hinged doors (doors to match wheel well material) with push button latches. (4) driver side only.	$726
3320-0117	SCBA Air Pack Storage. (4) E-ONE SCBA air pack storage (2 each side) with hinged door (door to match wheel well material) with push button latches. Does not include SCBA bottles or air pack.	$2,911
3320-0119	SCBA/Wheel Chock Storage. (5) E-ONE SCBA bottle storage with hinged doors (doors to match wheel well material) with push button latches. (4) officer side and (1) driver side in wheel well area. (1) wheel chock storage compartment with hinged door and push button latch driver side in forward wheel well area. (2) wheel chocks to be stored per compartment. Does not include wheel chocks.	$2,704

3320-0122	SCBA Bottle Storage. (15) Fire Shopp SCBA bottle storage with hinged doors with push button latches. (8) officer side and (7) driver side in wheel well area.	$3,252
3325-0009	XRT Hydraulic tool system with 3 tool capability. 5,000 PSI system. Includes selector vlv for each reel, hyd res / filter and remote cooler. Requires gen with XRT hyd pump.	$25,652
3325-0013	TNT PTO-TWIN-LP Hydraulic tool system with 2 tool capability. 5000 PSI system. Requires Harrison gen with IHT configuration. Pump location: [#LOC]	$13,048
3325-0014	XRT Hydraulic tool system with 3 tool capability. 10,500 PSI system. Includes selector vlv for each reel, hyd res / filter and remote cooler. Requires gen with XRT hyd pump.	$25,652
3325-0015	HRT 2 tool system for Holmatro, thru drive on generator hydraulic pump for HRT air clutch and drive pump. Locate reservoir in upper pan adjacent to the hydraulic generator unit in rear dunnage pan. Locate the manifold inside the pump panel compartment up high with roof access for adjustments. Locate the cooler adjacent to the foam system cooler in forward dunnage pan. Plumb to reels in front bumper.	$50,044
3325-0018	There will be a thru shaft for the generator to work off the same PTO as HRT system.	$2,278
3330-0001	Slide-out platform, integral driver side running board (includes hand rail as applicable).	$1,432
3330-0002	Slide-out platform, rollerless. Includes chrome grab handle centered on the front face of the platform (includes hand rail as applicable). Located [#LOC].	$1,386
3330-0007	Folding Step. Location [#LOC]. Each location requires a minimum of (1) handrail per NFPA.	$134
3330-0008	Handrail 12". Location [#LOC].	$118
3330-0012	Intermediate pump panel step officer side with forward tapered corner. Includes step lighting (as applicable). Step light to be switched thru work light in cab.	$713
3330-0013	Platform with 500lbs. slides. Locate [#LOC]. Platform sized as required per location. I includes a chrome grab pull handle and a body mounted handrail (as applicable for body mounted locations).	$933
3330-0015	Auto Kwikee Step for Large Rescues. Locate under Entry door. The step shall be locked out when parking brake is activated.	$850
3330-0020	Intermediate pump panel step driver and officer side with forward tapered corner. Includes step lighting (as applicable). Step lights to be switched through work light in cab.	$1,369
3330-0023	Slideout platform-integral officer side running board. Not available with a front suction (includes handrail as applicable).	$1,432
3330-0025	Steps rear. Includes folding steps on officer side (staggered stepped as applicable with tailboard depth) for additional hosebed access and handrail mounted on officer side upper hosebed side (as applicable).	$385
3330-0026	(3) Cast Product steps. Mount to driver side of B1. To include lighting under each step and driver side upper hose bed hand rail.	$356
3330-0028	Rear driver side cast products steps with intermediate step. Includes step lighting with cast product steps.	$1,004
3330-0034	Recessed folding step box. Driver side rear. To accommodate all steps as applicable.	$265
3330-0035	Recessed folding step box. Officer side rear. To accommodate all steps as applicable.	$265
3330-0038	Upper hosebed handrail. Locate to rear most area of hosebed with same stanchions as rear tailboard handrails. Handrail not to be in the hosebed.	$247
3330-0041	Steps Rear NFPA. Includes diamond plate corner steps on driver and officer side for NFPA hosebed access and handrail mounted on driver and officer side upper hosebed side (as applicable)	$250
3330-0042	Hansen white LED body hand rails upgrade package (includes pump module if applicable).	$1,389
3330-0048	Handrails above compartments over 96" (Pair). To be mounted on top of body.	$368
3330-0050	Intermediate pump panel step driver side with forward tapered corner. Includes step lighting (as applicable). Step light to be switched thru work light in cab.	$713
3330-0053	Folding Step. Location [#LOC]. Step include integral lights. Each location requires a minimum of (1) handrail per NFPA.	$156
3330-0055	Steps rear. Steps include integral lights. Includes folding steps on officer side (staggered stepped as applicable with tailboard depth) for additional hosebed access and handrail mounted on officer side upper hosebed side (as applicable).	$466
3330-0056	Intermediate pump panel step officer side with forward and rearward tapered corners. Includes step lighting (as applicable). Step lights to be switched thru work light in cab.	$890
3330-0058	Intermediate pump panel step driver side with forward and rearward tapered corners. Includes step lighting (as applicable). Step lights to be switched thru work light in cab.	$890
3330-0061	Handrail to be mounted on the rear of the hosebed. Handrail to use offset stanchions and be mounted downward. This is in place of standard below the hosebed handrail.	$189
3330-0062	Step rear intermediate. Intermediate rear step to be embossed diamond plate. Includes folding steps on driver side for NFPA hosebed access and handrail mounted on driver side upper hosebed side (as applicable).	$585
3330-0063	Steps rear. Includes diamond plate gator grip corner steps on officer side for hosebed access and handrail mounted on officer side upper hosebed side (as applicable).	$483
3330-0065	Zico access ladder. Location: [#LOC]. Includes required step lights.	$1,780
3330-0069	Spacer bracket for platform mounting. Bracket to lower platform to approx. 12" from ground (measured to bottom of platform). Locate: [#LOC].	$273
3330-0071	Step rear intermediate above B2.	$747
3330-0073	Step rear intermediate. Locate above B1, includes handrail (in place of horizontal hosebed handrail).	$585
3330-0074	Access ladder. Aluminum extruded ladder with ribbed aluminum extrusion steps located on officer side of pump module offset to the rear. Rear rail to loop up and over to aid in access into/out of dunnage storage pan.	$1,675
3330-0075	Slideout platform - SlideMaster. Location: [#LOC].	$1,828
3330-0077	Intermediate pump panel step officer without taper. Includes step lighting (as applicable). Step light to be switched thru work light in cab.	$752

3330-0079	Slide-out platform, rollerless. Includes chrome grab handle centered on the front face of the platform (includes hand rail as applicable for body mounted locations) and required step lighting. Located [#LOC].	$933
3330-0080	Intermediate pump panel step driver side located rearward of the crosslays. Includes step lighting (as applicable). Step lights to be switched thru work light in cab.	$890
3330-0082	Handrail 36". Location: driver side vertically mounted on forward corner extrusion of pump module..	$351
3330-0083	Handrail 18". Location: (1) on top of forward staircase module 3x3 extrusion, (1) on officer side lip of staircase storage pan and (1) on top of officer side compartment top offset to front.	$525
3330-0085	Ladder, aluminum access rear of body with extruded and ribbed extrusion sides and steps. The outboard vertical extrusion is to extend full height and over the rear upper body for an additional gripping surface when accessing the upper body/hosebed area. Locate to the [#LOC]	$608
3330-0089	Intermediate pump panel step driver and officer side without taper. Includes step lighting (as applicable). Step light to be switched thru work light in cab. Mounting feet to be reverse mounted due to vertically hinged panel.	$1,369
3330-0090	Handrail on pump module to be full length as possible. Location: [#LOC].	$118
3330-0093	Ladder access, aluminum extruded ladder with ribbed aluminum extrusion steps located on the rear offset to the officer side. Includes required step lights.	$1,686
3330-0094	A pair of 12" handrails shall be supplied. Locate 1 each side outboard of ladder on roof.	$234
3330-0095	Intermediate pump panel step driver and officer side located rearward of the backboard storage. Includes step lighting (as applicable). Step lights to be switched thru work light in cab.	$890
3330-0100	Step below body. Located below [#LOC]. Each location requires a minimum of (1) handrail / handhold per NFPA.	$356
3330-0101	Intermediate pump panel step for rear pump panel.	$397
3330-0104	Dual lighted LED folding steps rear NFPA. Includes folding steps on officer side (staggered stepped as applicable with tailboard depth) for additional hosebed access and handrail mounted on officer side upper hosebed side (as applicable).	$411
3330-0105	Dual lighted LED folding step. Location: [#LOC]. Each location requires a minimum of (1) handrail per NFPA.	$127
3330-0106	Step rear intermediate. Intermediate rear step to be located just below the upper ladder storage compartment.	$585
3330-0107	All body and pump module (if applicable) hand rails to use Austin Hardware model GR-002-AL-BRT-144 knurled bright anodized aluminum tubes IPOS.	$309
3330-0118	Steps rear. Steps include integral LED lights. Includes (6) folding steps - (3) on driver side and (3) on officer side (staggered stepped as applicable with tailboard depth) for additional hosebed access and handrail mounted on driver and officer side upper hosebed side (as applicable).	$690
3330-0123	Rear landing platform located above the B1 compartment. Landing platform to be used for hose loading operations and will be embossed diamond plate.	$585
3330-0124	Access ladder. Aluminum extruded ladder with ribbed aluminum extrusion steps located on the rear offset to the driver side. Includes required step lights.	$1,686
3330-0125	Slideout platform-integral driver side running board (includes handrail as applicable). The platform step to be smooth plate with gator grip painted black durabak.	$1,721
3330-0126	Slideout platform-rollerless. Includes chrome grab handle centered on the frt face of the platform (includes handrail as applicable). Located below officer side pump panel. The platform step to be smooth plate with gator grip painted black durabak	$1,675
3330-0134	Step rear intermediate. Locate above rear traffic advisor, includes handrail (in place of horizontal hosebed handrail).	$585
3330-0138	Diamond plate step. Located below hosebed with step running from inboard of access ladder to opposite side end of hosebed. Step to be embossed diamond plate.	$668
3330-0139	Step below side intake / discharge panel (PR). Embossed dia plt with steel supports. Each location requires a minimum of (1) handrail / handhold per NFPA. eMAX only.	$1,391
3330-0142	Rear Step/Bumper, 12" stainless steel w/swing-up assist, Wildland	$2,046
3330-0143	Folding Step Package. Steps include LED integral lights. Locate (3) each side rear. Includes applicable hand rails as required, Wildland.	$1,485
3330-0152	Handrail 36". Location offset to driver side of body headboard forward of the water tank fill tower(s).	$234
3330-0155	Step rear intermediate. Locate above B1.	$585
3330-0156	Step rear intermediate. Intermediate rear step to be located above the thru the tank storage tunnel.	$585
3330-0158	Step below side intake / discharge panel (PR). Gator grip diamond plate. Each location requires a minimum of (1) handrail / handhold per NFPA. eMAX only.	$1,064
3330-0159	Step rear intermediate. Intermediate rear step to be located above the rear Newton dump.	$585
3330-0161	Handrail 12" with angled stanchions. Location: outboard on driver side compartment top 8" off front compartment face.	$118
3330-0165	Handrail 24". Location [#LOC].	$213
3330-0166	Handrail 12". Location: Mount on rear of truck at E-One discretion.	$118
3330-0167	Intermediate rear step to be approximately 10" deep located above the rear Newton dump valve, and be of embossed aluminum treadplate.	$585
3330-0168	Slide-out platform, rollerless. Includes chrome grab handle centered on the front face of the platform (includes hand rail as applicable). Located under right side pump running board.	$1,386
3330-0170	Slideout platform-roller-less. Includes chrome grab handle and retaining pin, centered on the front face of the platform (includes handrail as applicable for body mounted locations) and required step lighting. Located: [#LOC].	$933
3330-0171	Steps rear NFPA compliant. Includes diamond plate corner steps on driver and officer side rear of body for NFPA hose bed access. Includes hand rails mounted vertically on driver and officer side rear beavertails and horizontal below the hose bed (as applicable).	$422
3330-0173	Step bolt on, 19.9" X 8" gator grip stepping surface shall be mounted [#LOC].	$322

3330-0174	Slideout platform-rollerless. Includes chrome grab handle centered on the front face of the platform (includes hand rail as applicable). The platform step to be smooth plate with gator grip painted black durabak. Located [#LOC].	$1,661
3330-0177	Intermediate pump panel step constructed of 3/16" (.187") aluminum smooth plate with black Scorpion coating (IPOS diamond plate) for rear pump panel.	$544
3330-0179	Steps below side intake / discharge panel (PR). Bustin Tread and diamond plate. Each location requires a minimum of (1) hand rail / hand hold per NFPA. SM SS eMAX only.	$1,064
3330-0182	Step rear intermediate embossed treadplate. Locate above B1, includes handrail (in place of horizontal hosebed handrail).	$585
3330-0183	Step rear intermediate. Locate above B1, includes handrail (in place of horizontal hosebed handrail). Step construction shall be aluminum smooth plate IPO diamond plate painted Black Scorpion (rough finish).	$824
3330-0184	Step rear intermediate. Locate above B2, includes handrail (in place of horizontal hosebed handrail).	$585
3330-0185	Step below side intake / discharge panel (PR). Gator grip plate constructed of 1/8" (.125") aluminum smooth plate with black Scorpion coating (rough finish) IPOS diamond plate. Each location requires a minimum of (1) handrail / handhold per NFPA. eMAX only.	$1,351
3330-0186	Rear handrails. Locate on rear of the body 3x3 and extend from just above the tailboard to the top of the body on the driver and officer sides. In place of standard 48" handrail.	$460
3330-0187	Step rear intermediate. Locate above B1. The step shall be 10" in depth.	$638
3330-0188	Hansen green LED body hand rails upgrade package (includes pump module if applicable).	$1,389
3330-0189	Step rear intermediate embossed treadplate. Locate below fold-a-tank.	$585
3330-0190	Step below side intake / discharge panel (PR). Smooth plate aluminum with gator grip painted black durabak. Each location requires a minimum of (1) handrail / handhold per NFPA. eMAX only.	$1,277
3330-0191	Access ladder. Aluminum extruded ladder with ribbed aluminum extrusion steps located on driver side of pump module offset to the rear. Rear rail to loop up and over to aid in access into/out of dunnage storage pan.	$1,675
3330-0193	Step rear intermediate. Locate below hosebed, includes handrail (in place of horizontal hosebed handrail).	$585
3330-0196	Additional handrails horizontal above pump panel, below upper pump module (1) driver, (1) officer side. Mount handrails offset to the rear (just forward of folding steps).	$229
3330-0198	Intermediate rear step to be approximately 10" deep located above the rear compartment and be of embossed aluminum treadplate.	$585
3330-0201	Step rear intermediate embossed treadplate. Locate below hosebed, includes three (3) hand hold cut-outs on top of the step in place of the hand rail.	$585
3330-0202	Intermediate rear step to be approximately 8" deep located at the rear panel and be constructed of embossed aluminum treadplate.	$507
3330-0206	Step rear 10" intermediate embossed treadplate. Locate below hosebed, includes three (3) hand hold cut-outs on top of the step in place of the hand rail.	$585
3330-0207	Hansen blue LED body hand rails upgrade package (includes pump module if applicable).	$1,389
3330-0208	NFPA hose bed access ladder. Zico model RL18 for increased visibility of rear outboard body mounted DOT/NFPA lighting. Includes required step lights and additional hand rail(s) if applicable. Location: [#LOC].	$2,152
3330-0209	Slide-out platform, rollerless. Includes chrome grab handle centered on the front face of the platform (includes hand rail as applicable). Located below tailboard centered and the step area the same width as the access ladder.	$1,386
3330-0210	Handrail 12". Install 12" handrails on the upper flat section above the speedlays for easier access to the top mount pump panel walkway.	$118
3330-0211	Intermediate pump panel step officers side located rearward of the crosslays. Step to be constructed of embossed aluminum treadplate. Includes step lighting (as applicable). Step lights to be switched thru work light switch in cab.	$893
3330-0212	(2) Dual lighted LED folding steps. Location: Side by side centered on front pump module access door above walkway to aid pump operator in reaching and operating deck gun from crosswalk area. Includes reinforced 3/16" diamond plate pump access door. Each location requires a minimum of (1) handrail per NFPA.	$359
3330-0214	Slidemaster pull out platform shall be mounted in B1 compartment floor.	$1,186
3330-0216	Access ladder. Sure Step V2. Finish: Aluminum. Includes required step lights and additional hand rail(s) if applicable. Location: [#LOC].	$2,495
3330-0219	Step rear intermediate embossed treadplate. Locate below hose bed, to extend rearward from body 12 in. and shall include three (3) hand hold cut-outs on top of the step in place of the hand rail.	$640
3330-0220	Slide-out platform, rollerless. Includes chrome grab handle centered on the front face of the platform (includes hand rail as applicable). Located [#LOC].	$1,386
3330-0222	Rear landing platform (full width) located below hosebed area. Landing platform to be used for hosebed operations and will be embossed diamond plate.	$825
3330-0223	Intermediate rear step to be approximately 10" deep located above the rear compartment and be of embossed aluminum treadplate. Includes side mounted gussets to provide a 500lb weight rating.	$653
3330-0224	Handrails 12". Install (2) 12" Hansen white LED lighted handrails on the upper rear top of body forward of the rear unistruts.	$396
3330-0225	Folding Step. Step to be located 18" above surface of tailboard, and directly below drivers side rear vertical handrail.	$256
3330-0226	Step rear intermediate smooth plate painted black Durabak. Locate above B1, includes handrail (in place of horizontal hosebed handrail).	$732
3330-0228	Step rear intermediate embossed treadplate. Locate above B1, includes three (3) hand hold cut-outs on top of the step in place of the hand rail.	$585

3330-0230	Non-folding 8x8 bolt on surface mount CPI step with LED lighting. CPI model# SP2013-1-D Each location requires a minimum of (1) handrail per NFPA.	$159
3330-0231	Slide-out platform, rollerless to be painted Durabak black. Includes chrome grab handle centered on the front face of the platform (includes hand rail as applicable). Located [#LOC]..	$3,464
3330-0232	Step below side intake / discharge panel (PR) to be painted Durabak black.. Smmoth plate. Each location requires a minimum of (1) handrail / handhold per NFPA. eMAX only.	$1,331
3340-0003	Cast Products recessed fuel fill with door.	$136
3340-0004	Hosebed above the booster tank. Includes forward hosebed and tower(s) cover plate work (as applicable). Hosebed adjustable divider extrusion rearward of the furthest tower is to run full width of the hosebed (as is practical with other hosebed mounted equipment).	$1,704
3340-0005	Step rear intermediate. Includes folding steps on driver side for NFPA hosebed access and handrail mounted on driver side upper hosebed side (as applicable).	$585
3340-0015	Diamond plate single axle wheel well. Includes bolt-on composite wheel well liners and aluminum trim fenderettes.	$1,174
3340-0026	Diamond plate overlay front body. For Stainless Steel product only. To include the entire front body panels. Do not wrap to the door opening.	$432
3340-0027	Diamond plate corner guards for the driver and officer front compartment face. Guards to wrap around the corner and be full height of side assembly or to a max of 96".	$219
3340-0028	Stainless Steel corner guards for the driver and officer front compartment face. Guards to wrap around the corner and be full height of side assembly.	$278
3340-0034	The hinged door(s) of [#LOC] to have door louvers for additional ventalation.	$169
3340-0035	Divider Long. To run full length of hose bed (front to rear).	$518
3340-0036	Body compartment interiors to have a swirled finish. Includes pan or hinged door as applicable.	$2,208
3340-0041	Removable number plate with mounting brackets. Locate [#LOC]. Plate to be painted job color. Lettering and/or graphics not included.	$285
3340-0045	(2) driver side roof top compartments. Includes hinged raised compartment lids with turn latches and grab handle(s). Each lid to have (1) bracket mounted LED light and to be wired to door ajar indicator in cab.	$2,655
3340-0049	Hosebed storage pan. Locate in forward area of hosebed.	$778
3340-0051	Reinforce flooring of compartment [#LOC] for storage of heavy equipment.	$340
3340-0052	Stainless steel trim on bottom edge of compartment opening of [#LOC].	$129
3340-0060	Diamond plate corner guards for the driver and officer rear compartment face. Guards to wrap around the corner and be full height of side assembly or to a max of 96".	$248
3340-0061	The walls of compartment [#LOC] to have additional louvers for additional ventilation.	$87
3340-0062	Divider medium. To run full length of hose bed (front to rear) behind single fill tower.	$465
3340-0063	Divider short. To run full length of hose bed (front to rear) behind dual fill towers or single set back fill tower.	$390
3340-0067	Turtle Tile Brand [#COL] Floor Matting covering all applicable Compartment Floors, Shelves, and Rollout Trays.	$1,122
3340-0068	Mud flaps, rear, black with Saulsbury logo.	$172
3340-0074	Body mainframe and hosebed side assemblies for a 85" high body.	$1,231
3340-0075	Body mainframe and hosebed side assemblies for a 90" high body.	$2,457
3340-0076	(2) officer side roof top compartments. Includes hinged raised compartment lids with turn latches and grab handle(s). Each lid to have (1) bracket mounted LED light and to be wired to door ajar indicator in cab.	$2,655
3340-0077	Body compartment Interiors to have Zolatone gray finish. To include pan of hinged doors and tool compartments (as applicable). Does not include floors if they are dia plt.	$5,525
3340-0078	Body compartment Interiors and compartment mounted components (shelves, trays, toolboards,etc.) to have Zolatone gray finish. To include pan of hinged doors, and tool compartments (as applicable). Does not include floors if they are dia plt.	$11,720
3340-0080	Bolt-on diamond plate 18" tailboard (full width of body). Includes (2) squared off beavertails (no stanchions) with removable outer panels and handrails- (2) vertical on trailing edge of body and horizontal mounted handrail(s) below hosebed.	$981
3340-0081	Bolt-on diamond plate tailboard (full width of body). Includes handrails- (2) vertically on trailing edge of body and horizontally mounted handrail(s) below hosebed.	$1,310
3340-0082	Bolt-on diamond plate tailboard (full width of hosebed). Includes handrails- (2) vertical mounted on trailing edge of body and horizontal mounted handrail(s) below hosebed.	$739
3340-0083	Bolt-on diamond plate tailboard (full width of rear compartment). Includes the enhanced extended side compartment frame work with diamond plate compartment tops, (1) officer side lower area folding step. Driver side includes (1) upper hosebed mounted handrail (as applicable) and handrails- (2) vertical on trailing edge of body and horizontal mounted handrail(s) below hosebed.	$876
3340-0088	Smooth plate single axle wheel well painted job color. Includes bolt-on composite wheel well liners.	$1,701
3340-0089	Turtle Tile Brand [#COL] Floor Matting covering all applicable Compartment Floors, Shelves, and Rollout Trays.	$1,809
3340-0090	Turtle Tile Brand [#COL] Floor Matting covering all applicable Compartment Floors, Shelves, and Rollout Trays.	$2,463
3340-0093	Mud flaps, rear, black with E-ONE logo.	$171
3340-0094	Body mainframe and hosebed side assemblies for a 95" high body.	$3,686
3340-0095	(2) officer side roof top compartments with extra width to inboard side. Includes hinged raised compartment lids with turn latches, grab handle(s) and gas shock hold open and drain line(s) ran to below body. Each lid to have (1) bracket mounted LED light and to be wired to door ajar indicator in cab.	$5,306
3340-0096	(2) driver side roof top compartments with extra width to inboard side. Includes hinged raised compartment lids with turn latches, grab handle(s) and gas shock hold open and drain line(s) ran to below body. Each lid to have (1) bracket mounted LED light and to be wired to door ajar indicator in cab.	$5,306

3340-0097	Brushed Stainless Steel single axle wheel wells. Includes bolt-on composite wheel well liners and fenderettes.	$1,292
3340-0098	Stainless Steel single axle wheel wells. Includes job color paint, bolt-on composite wheel well liners and fenderettes.	$1,606
3340-0099	Diamond plate overlay rear body. For Stainless Steel product only. To include the entire rear body panels. Do not wrap to the door opening.	$355
3340-0102	Angled (Boston style) style tailboard corners.	$467
3340-0107	Diamond plate tandem axle wheel well. Includes bolt-on composite wheel well liners and fenderettes.	$2,343
3340-0108	Smooth plate tandem axle wheel well painted job color. Includes bolt-on composite wheel well liners and fenderettes.	$3,397
3340-0109	Power vent system located in [#LOC]. Includes timer and is run from shorepower inlet.	$203
3340-0113	Adjustable ladder brackets. Mount in adjustable tracks on officer side.	$496
3340-0114	Hosebed above the booster tank and side body compartments. Includes forward hosebed and tower(s) cover plate work (as applicable) and extended width side to side (over side compartments) for increased hosebed capacity.	$3,264
3340-0115	Bolt-on diamond plate 16" tailboard (full width of body). Includes (2) squared off beavertails (no stanchions) with removable outer panels and handrails- (2) vertical on trailing edge of body and horizontal mounted handrail(s) below hosebed.	$919
3340-0116	Bolt-on diamond plate 14" tailboard (full width of body). Includes (2) squared off beavertails (no stanchions) with removable outer panels and handrails- (2) vertical on trailing edge of body and horizontal mounted handrail(s) below hosebed.	$854
3340-0117	Bolt-on diamond plate 12" tailboard (full width of body). Includes (2) squared off beavertails (no stanchions) with removable outer panels and handrails- (2) vertical on trailing edge of body and horizontal (as applicable) mounted handrail(s) below hosebed.	$791
3340-0118	Bolt-on diamond plate 10" tailboard (full width of body). Includes (2) squared off beavertails (no stanchions) with removable outer panels and handrails- (2) vertical on trailing edge of body and horizontal mounted handrail(s) below hosebed.	$726
3340-0119	Speedy dry hopper. Locate [#LOC]. Includes discharge chute in compartment directly below roof top compartment with close off valve and extension hose for ground level dispensing. Capacity of speedy dry hopper is 200 lbs.	$1,650
3340-0121	Full length driver side tunnel. Reduces driver side upper compartment depths to 12" deep IPO 26". Tunnel includes access door at rear.	$1,487
3340-0122	Half length driver side tunnel. Reduces driver side upper compartment depths of L2 and L3 to 12" deep IPO 26".	$928
3340-0125	Recess mounting for directional light bar. Located on rear area of body.	$419
3340-0126	Diamond plate single axle wheel well. Includes fenderettes and bolt-on stainless steel wheel well liners.	$3,001
3340-0128	Bolt-in partition walls. Locate in lower rear compartment transverse area. Partitions to separate the side rear compartments from the rear compartment.	$246
3340-0132	Diamond plate single axle wheel well. Includes fenderettes and bolt-on aluminum wheel well liners painted job color.	$2,343
3340-0133	Officer side beavertail to have recess box (9"w x 14"H x depth of beavertail). Box to be mounted low flush with top of tailboard.	$432
3340-0135	Body mainframe and hosebed side assemblies for a 73" high body.	$1,722
3340-0136	Bolt-on diamond plate 20" tailboard (full width of body). Includes (2) squared off beavertails (no stanchions) with removable outer panels and (3) 48" handrails- (2) vertically on beavertails and (1) horizontally below hosebed.	$1,047
3340-0137	Body mainframe and hosebed side assemblies for a 92" high body.	$2,948
3340-0139	Bolt-on diamond plate 18" tailboard (full width of body). Includes (2) slanted beavertails (no stanchions) with removable outer panels and handrails- (2) vertically on trailing edge of body and horizontally mounted handrail(s) below hosebed.	$1,227
3340-0140	Hosebed above the booster tank. Includes forward hosebed and tower(s) cover plate work (as applicable). Adjustable track rearward of the fill tower(s) to run full width of the hosebed area.	$1,907
3340-0142	Crosslay roller 18". Mount driver side front compartment face just below compartment top.	$158
3340-0143	Interior ladder tunnel door. Locate in B1 inline with ladder tunnel thru tank. Hinge to officer side with D-Ring latch and driver side to be notched for cord reel.	$446
3340-0144	Stainless Steel floor overlay. B1/R1 full width.	$290
3340-0145	Rub rail for the body and pump area module(s).	$789
3340-0146	Stainless steel rubrail for the body and pump area module(s).	$1,573
3340-0147	Louver Guards. All lower body compartment louvers to have protective guard provided on exterior of compartments. Guards to prevent road spray from entering compartments.	$562
3340-0149	Transverse Module (full width). Locate forward of pump area. Includes a single compartment opening per side (with a shallow lower area and a transverse upper area with diamond plate flooring) and upper area for single stacked double crosslay with backboard storage.	$4,158
3340-0150	Dri-Dek brand [#COL] floor matting covering all applicable compartment floors, shelves, and rollout trays.	$1,047
3340-0151	Dri-Dek Brand [#COL] floor matting covering all applicable body compartment floors, shelves, and rollout trays.	$1,733
3340-0152	Dri-Dek brand [#COL] floor matting covering all applicable compartment floors, shelves, and rollout trays.	$2,388
3340-0158	Underbody splash guard behind rear axle mounted to body.	$554
3340-0165	Bracket pac trac jumbolok p/n 1070 PT. To hold (2) pike poles (1) 6ft and (1) 10ft. To be located on officer side compartment top.	$284
3340-0166	Bolt-in partition wall. Locate in [#LOC].	$229

3340-0173	Backboard storage box. Located in the officer side of the hosebed (full length). Includes vertically hinged door (wired to door ajar) w/push-button latch and composite flooring. Box to hold: (2) backboards. The box to have an open area (top access) to the rear of the backboards in remaining hosebed area.	$529
3340-0176	Swirl plate single axle wheel well with clear coat finish. Includes bolt-on composite wheel well liners.	$1,804
3340-0177	Black Dri-Deck flooring to be installed on all flat surfaces of the body. This includes floor, shelves and trays.	$1,277
3340-0178	Storage rack floor mounted in R3. For storage of air bags and plywood.	$1,037
3340-0180	Brushed stainless steel overlay front body. For Stainless Steel product only. To include the entire front body panels. Do not wrap to the door opening.	$644
3340-0181	Each lid to have (1) additional bracket mounted light. This is in addition to light that comes standard for total of (2) lights per compartment.	$160
3340-0182	Brushed stainless steel single axle wheel well. Includes bolt-on stainless steel wheel well liners and fenderettes.	$2,577
3340-0184	Diamond plate box for directional lightbar and (2) GH scene lights. Box to be mounted on 3" x 3" aluminum angle at rear of hosebed storage pan. Lights to be surface mounted to box.	$591
3340-0187	Sign "Stay Back 150 Metres" with black reflective lettering. Locate below rear of body.	$140
3340-0191	Divider Support to run full width of hosebed (side to side) at the front of the hosebed and towards the rear of the hosebed at top of the divider(s). Attach to each hosebed divider to provide additional support.	$354
3340-0193	Pumper Body, Pump Module and Cab Tags in French to replace standard English E-One supplied Tags.	$1,594
3340-0194	Bolt-on diamond plate tailboard (full width of rear compartment) for use with low hosebed. Includes driver side (1) upper hosebed mounted handrail (as applicable), handrail(s) mounted horizontally below hosebed and (2) handrails mounted vertically on trailing edge of body.	$876
3340-0198	Rear diamond plate vertical hinged door on driver side roof top compartments. Includes thumb latch and wiring for door ajar switch.	$190
3340-0200	Removable slat flooring. Location: [#LOC]	$282
3340-0207	Piping cover to be located in compartment [#LOC]. Includes compartment wall cut-outs for piping.	$476
3340-0210	Brushed stainless steel overlay rear body. For Stainless Steel product only. To include the entire rear body panels. Do not wrap to the door opening.	$644
3340-0211	Painted smooth plate overlay rear body. For Stainless Steel product only. To include the entire rear body panels. Do not wrap to the door opening.	$1,986
3340-0214	Smooth plate outboard beavertail panels (PR). Painted job color.	$554
3340-0215	Divider Long. To run full length of hosebed (front to rear). Divider height to half of hosbed depth (top to bottom). For use with low hosebed configurations only.	$518
3340-0216	Body mainframe and upper body/hosebed side assemblies for a 90" high body.	$680
3340-0218	Sign "Stay Back 500FT". White plate with red reflective lettering. Locate low on rear of body / body doors.	$140
3340-0219	Body and hosebed storage pan pump access panel package. Includes removable access panels in upper forward area of L1/R1 and a large removable access panel in floor of the hosebed storage pan.	$614
3340-0220	Body compartment Interiors to have Zolatone black finish. To include pan of hinged doors (as applicable). Does not include floors if they are dia plt.	$5,525
3340-0221	Body compartment Interiors and compartment mounted components (shelves, trays, toolboards,etc.) to have Zolatone black finish. To include pan of hinged doors (as applicable). Does not include floors if they are dia plt.	$11,720
3340-0222	Locking push button latches. Located (1) on each backboard storage door and (2) on drop down door for stokes basket storage.	$66
3340-0223	Stainless Steel corner guards for the driver and officer rear compartment face. Guards to wrap around the corner and be the height of the top of the tail lights.	$265
3340-0227	Divider Long. To be split for rear mount hosebed application. Main body hosebed divider to be squared on both ends. Rear hosebed divider to have radius end.	$774
3340-0231	Nylon black cargo net(s) in interior compartment opening(s) behind lift-up doors of [#LOC]. Cargo net(s) to be held in place at top between two (2) pieces of flat bar, through-bolted. Cargo net(s) to be held in place at bottom with twist-locks outboard and snaps inboard. Two (2) velcro straps to be installed: (1) on rear of flat bar and (1) on cargo net to hold in place for compartment access.	$701
3340-0232	Directional Lightbar Box. Located on rear area of body between upper rear hosebed side tubes. Box to be diamond plate.	$604
3340-0233	Speedy Dry Hopper. Locate roof top compartment above R3. Includes discharge chute in compartment directly below roof top compartment with close off valve and extension hose for ground level dispensing. Capacity of speedy hopper is 68 lbs.	$1,289
3340-0241	Rear diamond plate vertical hinged door on officer side roof top compartments. Includes thumb latch and wiring for door ajar switch.	$190
3340-0245	Nylon black cargo net(s) over exterior compartment opening(s) [#LOC]. Cargo net to be held in place with twist-locks.	$571
3340-0248	Hosebed Storage Pan. Locate in forward area of hosebed. Extra width front to back for equipment, generator and fill tower storage.	$1,554
3340-0251	Half length driver side tunnel. Reduces driver side upper compartment depths of L2 and L3 to 12" deep IPO 26". Includes cut-out in hosebed side wall in forward area of L2. Cut-out to forward of Little Gaint sleeve. Includes cover plate with push button latches.	$2,129
3340-0252	Bolt-in floor R2. Floor is in addition to the existing DP floor. Floor to have 2" raised forward area (tapered towards rear for securing cribbing) and run full length front to rear.	$232
3340-0253	Backboard storage compartment. Locate in officer side ladder tunnel. Rack to be approx 2" wide.	$434
3340-0259	(1) officer side transverse module extra width (inboard side) roof top compartment. Includes hinged raised compartment lid with turn latches and grab handle(s). Compartment to have (1) bracket mounted LED light and wired to door ajar indicator in cab.	$2,320

3340-0264	License plate sized number plate. Locate in license plate bracket(s). Plate to be painted job color. Lettering and/or graphics not included.	$222
3340-0271	Nylon black cargo net in interior compartment opening behind door(s) of [#LOC]. Cargo net to be mechanically attached to bottom of compartment opening and bungee cords in the top corners.	$571
3340-0272	Sign "Stay Back 500FT" with black reflective lettering. Locate B1 door above D-ring.	$140
3340-0280	Divider Long. To run full length of hosebed (front to rear). Locate on top of hard suction storage in hosebed.	$518
3340-0284	The hosebed divider(s) to be notched on the rearward end for nozzle(s).	$273
3340-0285	Bolt-in partition wall. Locate in centered (front to back) in driver side roof top compartment.	$341
3340-0290	Full width partition(s) located in hosebed rearward of the fill tower(s).	$558
3340-0291	Removable number plate with mounting brackets. Locate [#LOC]. Plate to be painted job color. Plate to be 8"W x 20"H. Lettering and/or graphics not included.	$404
3340-0292	Smooth plate single axle wheel well painted job color. Includes bolt-on composite wheel well liners. Wheel well plate(s) to be flush mounted.	$3,934
3340-0293	Crosswalk and Speedlay module compartment Interiors to have Zolatone gray finish. Does not include floors if they are dia plt.	$743
3340-0295	(1) driver side rear pump module extra width (inboard side) roof top compartment (offset rearward and sized to allow deck gun to stow without interfering with hosebed area). Includes hinged raised compartment lid with turn latches and grab handle(s). Compartment to have (1) bracket mounted LED light and wired to door ajar indicator in cab. Outboard side of body to run full width and wrap around the rear and meet with the end of the hosebed.	$2,320
3340-0296	(1) driver side transverse module extra width (inboard side) roof top compartment (offset rearward). Includes hinged raised compartment lid with turn latches and grab handle(s). Compartment to have (1) bracket mounted LED light and wired to door ajar indicator in cab. Forward area to be open for general location of items in forward transverse pan.	$2,320
3340-0297	(1) officer side transverse module extra width (inboard side) roof top compartment (offset rearward). Includes hinged raised compartment lid with turn latches and grab handle(s). Compartment to have (1) bracket mounted LED light and wired to door ajar indicator in cab. Forward area to be open for general location of items in forward transverse pan.	$2,320
3340-0298	(1) officer side rear pump module extra width (inboard side) roof top compartment. Includes hinged raised compartment lid with turn latches and grab handle(s). Compartment to have (1) bracket mounted LED light and wired to door ajar indicator in cab. Outboard side of body to run full width and wrap around the rear and meet with the end of the hosebed end.	$2,654
3340-0300	(1) officer side rear pump module roof top compartment. Includes hinged raised compartment lid with turn latches and grab handle(s). Compartment to have (1) bracket mounted LED light and wired to door ajar indicator in cab. Outboard side of body to run full width and wrap around the rear and meet with the end of the hosebed end.	$1,328
3340-0303	(1) driver side rear pump module roof top compartment. Includes hinged raised compartment lid with turn latches and grab handle(s). Compartment to have (1) bracket mounted LED light and wired to door ajar indicator in cab. Outboard side of body to run full width and wrap around the rear and meet with the end of the hosebed end.	$1,328
3340-0305	Body mainframe and hosebed side assemblies for a 90" high body. Includes modifications for 4x4 and plumbing applications as required.	$3,070
3340-0309	Sign "Keep Back 300FT". White plate with red reflective lettering. Locate on rear ladder access door.	$140
3340-0310	OBSOLETE - USE 4460-0004	$428
3340-0313	Locate Foam Fill Tower in the hosebed storage pan. Water Fill Tower located in the hosebed.	$448
3340-0319	Bolt-on diamond plate 10" tailboard (full width of body). For use with rear ladder application. Includes handrails- (1) vertical on trailing edge of body opposite side of ladder and handrail(s) horizontal below hosebed.	$945
3340-0320	Locate Tank Fill Tower(s) in the hosebed area. For use with hosebed storage pan for max storage pan capacity.	$790
3340-0324	Body mainframe and hosebed side assemblies for a 98" high body.	$4,424
3340-0338	(1) driver side rear pump module extra width (inboard side) roof top compartment. Includes hinged raised compartment lid with turn latches and grab handle(s). Compartment to have (1) bracket mounted LED light and wired to door ajar indicator in cab. Outboard side of body to run full width and wrap around the rear and meet with the end of the hosebed end.	$2,654
3340-0339	(1) driver side transverse module extra width (inboard side) roof top compartment. Includes hinged raised compartment lid with turn latches and grab handle(s). Compartment to have (1) bracket mounted LED light and wired to door ajar indicator in cab.	$2,320
3340-0343	Body mainframe and hosebed side assemblies for a 95" high body. Includes height of rear body/pump module.	$1,231
3340-0344	Hosebed above the booster tank and rear pump. Includes forward hosebed and tower(s) cover plate work (as applicable). Hosebed adjustable divider extrusion rearward of the furthest tower is to run full width of the forward hosebed.	$1,704
3340-0345	Hosebed above the booster tank and rear pump. Includes forward hosebed and tower(s) cover plate work (as applicable). Hosebed adjustable divider extrusion rearward of the furthest tower is to run full width of the hosebed.	$1,218
3340-0346	Hosebed above the booster tank and rear pump. Includes forward hosebed and tower(s) cover plate work (as applicable). Hosebed adjustable divider extrusion rearward of the furthest tower is to run full width of the hosebed.	$1,534
3340-0348	Divider Short. To be split for rear mount hosebed application. Main body hosebed divider to be squared on both ends. Rear hosebed divider to have radius end.	$670
3340-0349	Divider Medium. To be split for rear mount hosebed application. Main body hosebed divider to be squared on both ends. Rear hosebed divider to have radius end.	$722
3340-0350	Hosebed Storage Pan (24" front to rear). Locate in forward area of hosebed.	$471
3340-0351	Hosebed Storage Pan (40" front to rear). Locate in forward area of hosebed.	$778

3340-0354	(1) officer side rear pump module extra width (inboard side) roof top compartment (offset rearward and sized to allow deck gun to stow without interfering with hosebed area). Includes hinged raised compartment lid with turn latches and grab handle(s). Compartment to have (1) bracket mounted LED light and wired to door ajar indicator in cab. Outboard side of body to run full width and wrap around the rear and meet with the end of the hosebed.	$2,320
3340-0356	(1) driver side rear transverse module roof top compartment. Includes hinged raised compartment lid with turn latches and grab handle(s). Compartment to have (1) bracket mounted LED light and wired to door ajar indicator in cab.	$1,328
3340-0357	Body mainframe and hosebed side assemblies for a 85" high body. Includes modifications for 4x4 and plumbing applications as required.	$1,537
3340-0361	Divider Support to run full width of hosebed (side to side) at the front of the hosebed and towards the rear of the hosebed at top of the divider(s). Attach to each hosebed divider to provide additional support. Rear divider support to be split on either side of the aluminum hosebed center divider.	$354
3340-0364	Diamond Plate Hosebed Storage Pan Cover. Cover to be split due to ladder rack for access when in stowed position. Includes D-ring latches and gas shock(s). Hinge to the rear of the hosebed storage pan.	$1,645
3340-0365	Hosebed deflector divider. Locate to driver side rear of hosebed forward of deck gun. Deflector to only cover the forward and side of the deck gun piping. Rear area fo hosebed to be open for access from driver side rear.	$346
3340-0370	Body mainframe and hosebed side assemblies for a 80" high body. Includes modifications for 4x4 and plumbing applications as required.	$309
3340-0371	Crosswalk module compartment Interiors to have Zolatone gray finish. Does not include floors if they are dia plt.	$372
3340-0373	The R1 compartment to have smooth plate floor and compartment walls to be non-louvered.	$295
3340-0374	Sign "Stay Back 300FT" with black reflective lettering. Locate below rear of body.	$140
3340-0376	Diamond plate single axle wheel well. Includes fenderettes and bolt-on aluminum wheel well liners sanded finish.	$2,119
3340-0382	Body main frame and hose bed side assemblies for a 78" high pumper body.	$1,117
3340-0383	Body main frame and hose bed side assemblies for an 83" high pumper body.	$1,231
3340-0384	Body main frame and hose bed side assemblies for an 88" high pumper body.	$2,457
3340-0385	Body main frame and hose bed side assemblies for a 93" high pumper body.	$3,686
3340-0386	Mateflex brand [#COL] floor matting covering all applicable compartment floors, shelves, and roll-out trays.	$1,809
3340-0387	Full width of hose bed stainless steel transverse storage divider. Located in forward area of hose bed to separate equipment items such as a generator, etc. from the main hose storage area. Main hose bed dividers will be located rearward of the transverse divider.	$778
3340-0388	Brushed stainless steel rubrails for the sides of the body below the lower side compartments.	$789
3340-0389	Stainless steel rear fender panels painted job color. (Recommended for FRP paint process compatibility!) Includes bolt-on stainless steel inner wheel well liners (not painted) and polished stainless steel outer fenderettes.	$1,701
3340-0390	Stainless steel rear fender panels with aluminum treadplate overlays IPO painted finish. Includes bolt-on stainless steel wheel well liners (not painted) and polished stainless steel outer fenderettes.	$1,292
3340-0391	Body mainframe and hosebed side assemblies for a 83" high body.	$1,231
3340-0392	Underbody full width mudflap behind rear axle (as applicable) mounted to body.	$653
3340-0403	Diamond plate side dump panels. Includes lift-up diamond plate doors with spring loaded hinges.	$471
3340-0404	Smooth plate side dump panels. Includes lift-up smooth plate doors with spring loaded hinges. Smooth plate panels painted job color.	$897
3340-0405	Sign, "STAY BACK 500 FEET" with black reflective lettering. Locate below rear of body.	$140
3340-0406	Sign "Stay Back 150 Metres" with black reflective lettering. Locate below rear of body.	$140
3340-0407	Hosebed above the booster tank. Hosebed assembly to be 3-piece design due to stepped hosebed. Includes forward hosebed and tower(s) cover plate work (as applicable). Hosebed adjustable divider extrusion rearward of the furthest tower is to run full width of the hosebed.	$2,262
3340-0408	Adjustable ladder brackets. Locate in adjustable track [#LOC].	$513
3340-0409	Adjustable tracks (pair). Locate tracks to [#LOC] assembly. For use with ladder and/or hard suction rack(s).	$202
3340-0412	Bolt-on diamond plate 24" tailboard (full width of body). Includes (2) squared off 12" deep beavertails (no stanchions) with removable outer panels and handrails- (2) vertical on trailing edge of body and horizontal mounted handrail(s) below hosebed. For use with swivel style rear tank dump only.	$1,157
3340-0413	Wheel Chocks 44" NFPA Complaint - Pair of Zico SAC-44. Up to 44" diameter Tires. Includes mounting bracket. Locate [#LOC].	$679
3340-0414	Body main frame and 46" wide hose bed for a 90" high rescue pumper body.	$2,457
3340-0415	Body main frame and 46" wide hose bed for a 97" high rescue pumper body.	$3,686
3340-0416	Removable number plate with mounting brackets. Locate driver side outboard of B1. Plate to be painted job color. Plate to be 10"W x 10"H. Lettering and/or graphics not included.	$285
3340-0417	Removable number plate with mounting brackets. Locate driver and officer side of the cab below canopy window. Plate to be painted job color. Plate to be 12"W x 12"H. Lettering and/or graphics not included.	$285
3340-0455	Reinforce compartment [#LOC] for storage of heavy equipment. The compartment to be capable of storing up to 1000lbs of equipment.	$340
3340-0459	Locking push button latches to match body compartment door locks. Locate (1) on each door of the deluxe trim package of chassis and (1) on each SCBA bottle storage door.	$66
3340-0460	Body main frame and hose bed side assemblies for a 78" high body with low hose bed and "L" shaped water tank.	$1,396

3340-0461	Body main frame and hose bed side assemblies for an 83" high body with low hose bed and "L" shaped water tank.	$1,676
3340-0467	Roof top compartment Interiors to have Zolatone gray finish.	$1,996
3340-0470	The outboard panels of the roof top compartments to be smooth plate overlays. These areas are to be seamless and painted job color.	$2,765
3340-0472	Compartment floors to be flush for sweep out.	$652
3340-0476	Stainless steel tandem axle rear fender panels painted job color. Includes bolt-on stainless steel wheel well liners (not painted) and polished stainless steel outer fenderettes.	$2,233
3340-0482	Roof top compartments on driver and officer side to have 1" drain holes with tubing and plugs.	$280
3340-0483	Divider Long. To run full length of hose bed (front to rear). Divider 3/4 height of hose bed depth (top to bottom). For use with low hose bed configurations only.	$518
3340-0484	Body mainframe and hosebed side assemblies for a 92" high body.	$2,457
3340-0485	Body mainframe and hosebed side assemblies for a 95" high body. Includes modifications for 4x4 and plumbing applications as required.	$4,423
3340-0486	Diamond plate single axle wheel well. Includes bolt-on composite wheel well liners and bolt-on polished alum fenderettes.	$1,064
3340-0488	Divider long for use with hosebed preconnect. Divider to be set back and/or notched at forward area of hosebed for access to preconnect line connection.	$518
3340-0493	Sign "Keep Back 150M". White plate with red reflective lettering. Locate on rear ladder access doors.	$140
3340-0494	Rubrail for the body.	$789
3340-0499	Storage area to officer side of center hosebed divider. Area to include (from driver to officer side): (1) 10" H x 10" W. This includes (1) divider with square ends and hosebed style top. Remaining are to be for horizontally stored backboards (2). Area to be 6" H x remaining hosbed width with a hosebed style top (full length of hosebed).Each storage area to have a drop down diamond plate door with push button latching and each wired to door ajar indicator in cab.	$671
3340-0509	The outboard panels of the roof top compartments to be smooth plate overlays. These areas are to be seamless and painted job color.	$2,765
3340-0511	Bolt-in partition walls. Locate in lower rear compartment transverse area. Partitions to seperate the L3 compartment from the rear compartment.	$124
3340-0512	I-Zone brackets mounted on driver and officer rear body compartment face up high. Includes 14" removable poles with keeper pins.	$239
3340-0513	Special hosebed configuration from driver to officer side. 500' of 2.5" DJ hose, (1) short divider, backboard storage to hold (2) backboards with access from a vertically hinged diamond plate door with a push-button latch, (1) short divider, 750' of 3" DJ hose to be stored above strut storage box with (3) 5" aluminum tubes length of the hosebed includes drop down door (wired to door ajar) with push-button latch and hosebed style top, hosebed cover center divider, 1200' of 5" LDH hose, (1) long divider with horizontally hinged shelf to seperate upper hose packs from lower 300' of 1.75" DJ hose.	$3,237
3340-0514	Compartment R1 to have no louvers. Requires roll-up door application.	$113
3340-0516	Storage Pan Hot Shot II Hydraulic Reservoir. Includes a hinged lid with gas shock hold open.	$778
3340-0517	Bolt-in partition to separate the officer side booster reel from the officer side main hosebed. Partion to have scotch-brite finish.	$329
3340-0519	Removable number plate with mounting brackets. Locate [#LOC]. Plate to be painted job color. Plate to be 12"W x 12"H. Lettering and/or graphics not included.	$298
3340-0520	Smooth plate single axle wheel well painted job color. Includes bolt-on composite wheel well liners and bolt-on polished alum fenderettes.	$1,593
3340-0521	All body and pump module compartments (if applicable) and/or storage areas to have no louvers or vents.	$280
3340-0524	Hosebed area above booster tank. Includes raised sides and front of water tank, slatted flooring and adjustable divider extrusions.	$4,260
3340-0526	Hose bed storage pan to extend forward over eMAX transverse storage area(s).	$330
3340-0527	2x2 angle to be located full width of opening of compartment L2.	$182
3340-0530	Removable number plate with mounting brackets. Locate [#LOC]. Plate to be painted job color. Plate to be 12"W x 8"H. Lettering and/or graphics not included.	$271
3340-0531	Spare tire carrier lift, 12VDC, below body, Wildland	$1,843
3340-0533	Backboard storage sleeve. Locate within LS hose bed cover, underneath. Sleeve to be approximately 3" H x 20" W x 72" L, Wildland	$803
3340-0534	Backboard storage sleeves. Locate in under both hose bed covers. Racks to be approximately 3" H x 20" W x 72" L, Wildland	$1,190
3340-0535	Hose bed bulkhead dividers, stainless, Wildland	$739
3340-0536	Hose bed divider, aluminum, Wildland	$366
3340-0538	Brushed stainless steel rubrails for the sides of the body below the lower side compartments, Wildland	$463
3340-0539	Bolt-on rubber fenderettes, Wildland	$603
3340-0540	Embossed aluminum treadplate trim, Wildland	$786
3340-0542	Hose bed divider, aluminum, additional, Wildland	$366
3340-0543	Transverse sleeve thru backwall of compartments L1 and R1. Transverse area to be approx. 32" wide x 18" high x 47" deep.	$773
3340-0545	Diamond plate box for directional lightbar. Box to be mounted on 3" x 3" aluminum angle at rear of hosebed storage pan. Lightbar to be surface mounted to box.	$591
3340-0551	Diamond plate hose storage box located on driver side compartment top. Includes lift-up door for easy access from the ground. Tray to sized for 150' of 2.50" hose (deadlay).	$2,395
3340-0552	Double pre-connect tray on top of the drivers side compartment top offset to the rear. Tray to be "U" shape to hold 200' of 1.75" DJ (each). Includes hinged diamond plate cover.	$1,484
3340-0555	Roof top compartments to have raised push button latches in place of turn latches.	$343
3340-0560	Rolled hose rack for (4) hose rolls. Includes (3) adjustable dividers to be 18" high x 24" deep each with adjustable tracking on floor. Locate in floor of L1 compartment.	$611

3340-0562	Universal air pack bottle bracket installed on backwall of compartment [#LOC].	$158
3340-0576	Mateflex brand [#COL] floor matting covering all applicable compartment floors, shelves, and roll-out trays.	$1,095
3340-0577	Bolt-in partition wall. Located forward of electric cord reels in driver and officer side roof top compartments.	$229
3340-0578	Bolt-on trim panels to be installed over the side walls extrusions of the driver and officer side roof top compartments.	$863
3340-0579	Provide (2) two inch conduits with pull wires in them for dealer/customer installed equipment. Locate (1) from driver side forward roof top compartment to the hydraulic ports on the front bumper and (1) from driver side forward roof top compartment to the hydraulic ports in the B1 compartment.	$455
3340-0586	Storage pan over eMAX transverse storage area(s).	$465
3340-0587	Slip-on stainless steel dump elbow and 36" straight extension chute. Includes body mounted removable support arm and mounting brackets at rear of body for elbow and straight chute.	$1,755
3340-0588	Slip-on painted steel dump elbow and 36" straight extension chute. Includes body mounted removable support arm and mounting brackets at rear of body for elbow and straight chute.	$1,355
3340-0589	Body main frame and 46" wide hose bed for a 83" high rescue pumper body. Intended for use with overhead ladder rack and stay under 10' OAH.	$2,457
3340-0597	Handrail to be mounted between stanchion posts. Stanchion post be 6" high and set back 11" from back of body.	$513
3340-0599	Hosebed storage box. Located in the driver side of the hosebed. To hold (2) backboards, (2) 10' pike poles and (1) 10' attic ladder with access from a vertically hinged diamond plate door (wired to door ajar) with a push-button latch.	$1,554
3340-0600	Bolt-in partition walls. Locate in lower rear compartment transverse area. Partitions to seperate the R2 compartment from the rear compartment.	$124
3340-0602	Diamond plate side dump panels. Includes drop-down diamond plate doors with counter balanced actuation.	$690
3340-0603	Removable number plate with mounting brackets. Locate [#LOC]. Plate to be painted lower job color (if cab is painted two tone). Plate to be 8"W x 14"H. Lettering and/or graphics not included.	$298
3340-0604	Diamond plate hose storage box. Locate on driver side compartment top. Box to include removable flooring and a diamond plate drop down door with d-ring latch(s). Rubber stops will be provided ipo chains.	$1,484
3340-0605	Removable number plate with mounting brackets. Locate [#LOC]. Plate to be painted upper job color (if cab is painted two tone). Plate to be 14"W x 8"H. Lettering and/or graphics not included.	$298
3340-0608	Hosebed area above booster tank. Includes raised sides and front of water tank. No hosebed slats in hosebed.	$1,733
3340-0609	Guard Booster Reel. There shall be an expanded metal guard provided for booster reel mounted below body between frame rails to prevent booster reel hose from falling below the truck.	$576
3340-0610	Full width partition/channel located in hosebed rearward of the fill tower(s). Channel shall be approximately 6" wide x 2" high and located 106" from the rear of the truck. See photos on file.	$474
3340-0614	[#COL] edge trim for floor mounted Turtle Tile matting. Locate on door opening side only. Requires seperate floor matting option.	$395
3340-0615	Pan mounted diamond plate 3 sided generator shield. Includes partition in storage pan for driver side wall.	$978
3340-0616	Tool air system. Includes 6000 PSI DOT cyl, bottle rack, fill panel. Rack located driver side roof top compartment. Fill panel adjacent to breaker box In L1.	$4,955
3340-0617	The following items to be sanded smooth plate painted with black Scorpion coating place of standard diamond plate: Compartment tops, roof top compartment lids, hosebed storage pan, transverse module storage pan, aluminum hosebed covers, tailboard, rear intermediate steps, transverse module running boards.	$3,257
3340-0623	There shall be a compartment below side dumps, it will include a vertically hinged access door (one each side) below the side dumps with push button latch. Doors to match dump panel material. Compartment dims to be approximately 15" high x 24" wide x 26" deep.	$291
3340-0626	Body mainframe and hosebed side assemblies for a 94" high body.	$3,686
3340-0631	Removable number plate with mounting brackets. Locate [#LOC]. Plate to be painted body job color. Plate to be 8"W x 14"H. Lettering and/or graphics not included.	$298
3340-0632	Body main frame and 59" wide hose bed for a 90" high rescue pumper body.	$2,457
3340-0633	Removable Poly hose bed storage tray (EA). The floor of the tray(s) to be slotted to prevent the accumulation of water and allow for ventilation of wet hose.	$566
3340-0634	Double pre-connect tray on top of the drivers side compartment top offset to the rear. Tray to be "U" shape to hold 200' of 1.75" DJ (each). Includes black vinyl cover.	$1,484
3340-0638	Bolt-in partition wall. Located rearward of air cord reel in officer's side roof top compartment.	$229
3340-0639	Front of hose bed stainless steel partial storage divider on officer side for selected accessory such as a generator. Located in forward area of hose bed to separate the storage area from the main hose storage area. Applicable main hose bed dividers will be located rearward of the partial divider.	$826
3340-0641	Removable number plate with mounting brackets. Locate [#LOC]. Plate to be painted upper cab job color. Plate to be 5.5"H x 11"W. Lettering and/or graphics not included.	$298
3340-0643	Stainless steel trim for lower edge of rear mudflap (PR). The trim shall be 2" in height and go full width of the mudflap. The material shall be "polished" stainless steel and it will be mounted to the lower edge of the rear (back side) of the mudflaps.	$329
3340-0644	Flooring plate additional in L2 and R2 compartments. 3/16" aluminum smooth plate to be bolted in place 1/2" above standard diamond plate compartment floors.	$164
3340-0645	(2) driver side roof top compartments with extra width to inboard side. Includes hinged raised compartment lids ("embossed" treadplate) with turn latches, grab handle(s) and gas shock hold open and drain line(s) ran to below body. Each lid to have (1) bracket mounted LED light and to be wired to door ajar indicator in cab.	$5,361

3340-0646	(2) officer side roof top compartments with extra width to inboard side. Includes hinged raised compartment lids ("embossed" treadplate) with turn latches, grab handle(s) and gas shock hold open and drain line(s) ran to below body. Each lid to have (1) bracket mounted LED light and to be wired to door ajar indicator in cab.	$5,361
3340-0647	Roof top compartment doors shall have larger latches installed (Southco model C5-11-15 latch, C5-82 gasket) in place of standard.	$236
3340-0650	Fill tower partition. "U" shaped partition to be located around water fill tower and extend rearward to bolt to rear surface of storage pan. This 1/8" diamond plate "hat" section shall provide fill tower protection within the hose bed.	$336
3340-0651	Piping cover where visible for discharge piping above pump enclosure to front of hose bed (each). Cover to be stainless steel to blend with surrounding area.	$500
3340-0652	Stainless steel trim for lower edge of front mudflap (PR). The trim shall be 2" in height and go full width of the mudflap. The material shall be "polished" stainless steel and it will be mounted to the lower edge of the rear (back side) of the mudflaps.	$329
3340-0653	Diamond plate tandem axle wheel well. Includes bolt-on composite wheel well liners and bolt-on polished alum fenderettes.	$2,126
3340-0662	Recessed fuel fill with flat latching stainless steel door. Door style to match SCBA doors.	$286
3340-0664	Backboard storage box. Located in the officer side of the hosebed. To hold (1) backboard with access from a vertically hinged diamond plate door with a lift and turn latch. The box to only run the length of the backboards.	$529
3340-0666	Mounting for directional light bar. Located on rear area of body below upper or intermediate step.	$127
3340-0670	Double pre-connect tray on top of the drivers side compartment top offset to the rear. Tray to be "U" shape to hold 200' of 1.75" DJ (each). Includes cover to protect preconnects and hinged smooth plate cover for hose. Tray and covers to be painted job color.	$1,650
3340-0673	Storage box with (2) drop down doors. Diamond plate box to be approx. 136" long x 12" high x 12" deep mounted on officer side compartment top between hosebed side tubes. Includes hinged drop down doors with locking D-ring latches (wire to door ajar).	$986
3340-0675	The outboard panels of the rear body to be smooth plate overlays. These areas are to be seamless and painted job color.	$2,737
3340-0678	Double pre-connect tray on top of the drivers side compartment top offset to the rear. Tray to be "U" shape to hold 200' of 1.75" DJ (each). Includes red vinyl cover.	$1,484
3340-0683	Hosebed storage pan. Locate in forward area of hosebed. Pan depth shall be approximately 18".	$1,098
3340-0695	Soda ash hopper. Locate [#LOC]. Includes discharge chute in compartment directly below roof top compartment with close off valve and extension hose for ground level dispensing. The hopper shall be constructed of stainless steel, holding capacity shall be 200 lbs.	$2,223
3340-0697	Power vent system located in [#LOC]. Wired through receptacle in compartment.	$203
3340-0699	Bolt-on cover plate over upper section of water tank to be embossed diamond plate.	$593
3340-0702	Hosebed storage box. Located in the driver side of the hosebed. To be 76" long X 25" wide X hosebed depth. Box to have diamond plate top with approx. 4" upper. 4" middle and 8" lower storage space. Includes a vertically hinged diamond plate door (wired to door ajar) with a push-button latch.Hinge door to outside.	$1,554
3340-0703	Diamond plate box for directional lightbar and (2) Whelen M6 Linear Super LED scene lights. Box to be mounted on 3" x 3" aluminum angle at rear of hosebed decking. Lights to be surface mounted to box.	$1,366
3340-0707	Upper right side of body to be notched to allow hydraulic overhead ladder rack to be lowered for reduced travel height. Compartment opening height to remain std.	$1,619
3340-0708	The outboard panels of the driver side roof top compartments to be smooth plate overlays. These areas are to be seamless and painted job color.	$1,384
3340-0709	Vertical handrails as mounted the rear body shall extend full height from the bottom of the body to the top of the body IPOS (as practicality permits).	$138
3340-0710	Transverse storage modification affecting L3, B1 and R3 compartments to accommodate a transverse storage area running from L3 to R3 (lower area only). The transverse tunnel area shall be approximately the full depth of the B1 compartment, the compartment opening height shall start approximately 2" above the floor to maximum height available (height may be reduced as required depending upon the rear body storage tunnel foot print). The B1 compartment side walls will be opened (removed) as part of the transverse modifications necessary.	$1,157
3340-0714	Bolt-in floor [#LOC]. Floor is in addition to the existing DP floor. Floor to have 2" raised forward area (tapered towards rear for securing cribbing) and run full length front to rear.	$232
3340-0716	Bolt-in SS floor taper [#LOC]. Floor taper is in addition to the existing stainless steel floor. Floor to have 1.5" raised outer area (tapered towards back wall for securing cribbing) and run full length side to side.	$232
3340-0720	Slip-on painted steel dump elbow and 36" straight extension chute. Includes body mounted removable support arm and mounting brackets in compartment [#LOC] for elbow and straight chute.	$1,355
3340-0723	All compartment floors to have Zolatone gray finish. Includes changing floors from diamond plate to smooth plate.	$1,916
3340-0725	Rear vertically hinged door for the officer's side roof top compartment. The door includes thumb latch(s) and wiring for the door ajar switch. The material shall be 1/8" aluminum smooth plate and the hinge shall be placed outboard.	$127
3340-0726	Nylon black cargo net for interior compartment opening of compartment [#LOC]. Cargo net to have custom designed one-piece bar assembly and one step Velcro attachment process with footman loops shall be used opposite the bar end.	$316
3340-0727	Body main frame and hose bed for a 85" high stainless steel eMAX rescue pumper body.	$1,556
3340-0728	Body main frame and hose bed for a 90" high stainless steel eMAX rescue pumper body.	$2,996
3340-0729	Body main frame and hose bed for a 95" high stainless steel eMAX rescue pumper body.	$4,497
3340-0730	Smooth plate corner guards for the driver and officer front and rear compartment faces. Guards to wrap around the corner and be full height of side assembly or to a max of 96". Corner guards to be painted black durabak.	$943

3340-0736	Body main frame and hose bed side assemblies for an 83" high body with low hose bed and "L" shaped water tank. No upper rear crossover hand rail.	$1,463
3340-0737	Body mainframe and hosebed side assemblies for a 100" high body.	$4,912
3340-0738	A landing platform (10" in depth, the width shall be sized and positioned as required with overall rear end configuration) with embossed diamond plate surface will be centrally located at the upper rear of the apparatus to assist with hose bed cover operations.	$380
3340-0739	Turtle Tile brand floor matting covering driver and officer roof top compartment floors full length and width. Color: [#COL].	$639
3340-0740	Divider shroud for cab tilt pump, bolt in R1.	$192
3340-0743	Backboard Storage sleeve. Located in the officer side hard suction storage compartment. Sleeve to hold (1) backboard, 2"H x 16" W x 73" L. Includes stop bracket approximately 74" back from opening.	$434
3340-0746	CTECH Brand 4 drawer compartment toolbox unit in [#LOC]. Includes Cal Gray drawer face finish with two (2) 8" drawers below and two (2) 3" drawers above to mount in an available compartment opening. Toolbox dimensions to fit in an opening 39.5" W X 23.0" H X 24". Requires a fixed shelf mounted above toolbox enclose top drawer and to create opening height added separately.	$2,064
3340-0747	Compartment heater as high as possible on forward wall. Includes switch on driver overhead. Location: [#LOC].	$1,258
3340-0752	Embossed diamond plate in place of ALL standard and optioned diamond plate on body and modules.	$1,478
3340-0754	Hosebed storage pan constructed of 3/16" (.187") aluminum smooth plate with black Scorpion coating (rough finish) IPOS diamond plate. Locate in forward area of hosebed.	$988
3340-0757	Floor overlay [#LOC]. The overlay shall be constructed of 1/8" treadplate and shall be raised at the interior wall 1" providing a sloped floor (low point at the door opening).	$393
3340-0758	Speedy dry hopper. Locate [#LOC]. Includes discharge chute in compartment directly below roof top compartment with close off valve and extension hose for ground level dispensing. Capacity of speedy dry hopper is 180 lbs for a shorter upper body (less than 19").	$1,650
3340-0772	Rear wheel well trim shall be added to both sides of the unit. Diamond plate 1/16" thick shall be added to the 4" extrusion that surrounds the wheel well. The extrusion forward, rear and on top of the wheel well shall have a diamond plate overlay added.	$212
3340-0775	Stokes basket storage box for a Ferno Washington model 71. The storage box shall be made from diamond plate material approx 9" wide x 26" tall x 90" deep. It shall include a rear mounted door with a vertical hinge and a thumb latch. Location officer side hosebed.	$1,759
3340-0777	Slip-on stainless steel dump elbow and 36" straight extension chute. Includes body mounted removable support arm and mounting brackets in compartment [#LOC] for elbow and straight chute.	$1,755
3340-0778	Wheel well liner extensions for inboard side of rear wheel well liners (PR).	$347
3340-0779	All folding steps shall be Signature Fire Shopp brand. The folding steps shall be dual LED (top and bottom) model 101953-2 IPOS.	$161
3340-0786	Dual Hosebed above the booster tank. Includes forward hosebed cover plate work (as applicable). Hosebed adjustable divider extrusion rearward of the furthest tower is to run full width of the hosebed in the upper hose bed. (as is practical with other hosebed mounted equipment). Lower hose bed over tank shall have one non adjustable center divider hard mounted to divide lower hosebed into (2) equal width storage compartments for dealer added pull out hosetrays with nylatron slide plates	$3,067
3340-0788	Storage Pan Hot Shot II Hydraulic Reservoir. Includes a lid hinged forward with gas shock hold open.	$778
3340-0789	Hosebed storage pan. Locate in forward area of hosebed. Storage pan to be 109" interior length for Night Scan NSP7.5 light tower.	$1,556
3340-0790	Swing arm bracket with smooth plate box for TAL65 lightbar mounted on square extrusion. Swing arm to be mounted at rear of hosebed, with pivot tower and (2) locking towers to be provided.	$745
3340-0791	Body mainframe and hosebed side assemblies for a 87" high body.	$2,457
3340-0800	Notched hosebed divider(s). Notch to be in center approximately 32" up from floor and angle up 45 degrees at each end. See photo on file.	$436
3340-0801	Special hose bed divider reinforcement. Each divider shall have a round reinforcement welded in place on the forward and rear vertical edges and the top horizontal edges to stiffen the dividers as mounted.	$345
3340-0802	The vehicle shall be supplied with a deck gun cradle for additional support of the deck gun's tip/nozzle assembly. The cradle shall be made of stainless steel materials with a cushioned rest pad. Cradle shall remain unpainted.	$268
3340-0809	Body main frame and hose bed for a 95" high stainless steel eMAX rescue pumper body. Hose bed to be 56" wide.	$4,497
3340-0821	Locate (2) hosebed storage pans (1) each side of ladder storage box in forward area of hosebed. Pans to hold hydraulic cooler and hydraulic resevoir.	$886
3340-0823	Body mainframe and hosebed side assemblies for a 85" high bi-level body. Includes stepped headboard.	$1,231
3340-0830	Turtle Tile brand floor matting covering L1, R1 and B1 compartment floors only. Color: [#COL].	$639
3340-0836	Compartment pan drop down door inside to have Zolatone gray finish (door only). Location L2 and R2 drop down doors.	$240
3340-0837	Cover cast products AD0039-1 mounted over newton dump control switches on rear of body.	$213
3340-0838	Hosebed deflector divider. Locate to officer side rear of hosebed forward of deck gun. Deflector smooth plate to cover the forward and side of the deck gun piping. Rearward side of deflector at back of hose bed to be diamond plate.	$346
3340-0849	Rub rail assemblies constructed of 3" x 2" Black U.H.M.W. plastic. (1) bolted to the lower exterior edge of the apparatus body and pump module.	$931
3340-0861	Reinforce flooring of compartment LTC and RTC for storage of heavy equipment.	$522

3340-0862	Stainless steel trim on bottom edge of compartment opening of [#LOC]. Includes full height of exterior extrusion.	$161
3340-0863	Headboard extrusions and smooth plate at top front of the body to be painted job color finished.	$201
3340-0864	Diamond plate single axle wheel well. Includes bolt-on composite wheel well liners and sanded aluminum trim fenderettes.	$952
3340-0870	Stainless steel trim on bottom edge and covering entire surface of extrusion below compartment opening of [#LOC].	$194
3340-0874	Reinforced hinged .188" embossed diamond plate lid for dunnage pan. Includes two (2) D-Ring latches, stainless steel hinge along forward edge and gas shock hold open. Lid to be reinforced with welded on structure on underside to allow for lid to be a walking surface.	$708
3340-0880	Brushed stainless steel scuff plates for all body handrails.	$493
3340-0882	Body main frame and hose bed for a 97" high stainless steel eMAX rescue pumper body.	$4,592
3340-0883	Rubber fenderette in place of weld-on.	$298
3340-0888	FRP exterior panel replacement set for stainless steel tanker body. Panels to include all original factory cutouts and notches. Panels to be shipped loose with vehicle upon delivery.	$1,069
3340-0889	Body mainframe and hosebed side assemblies for a 96" high body.	$3,932
3340-0890	Divider Hose Bed Special Height iat standard. All Hose Bed Divider(s) shall include an extra 4" height over the standard hose bed divider height.	$203
3340-0892	Rub rail assemblies constructed of 3" x 2" Black U.H.M.W. plastic. (1) bolted to the lower exterior edge of the apparatus body only.	$631
3340-0894	Smooth plate single axle wheel well painted job color. Includes bolt-on composite wheel well liners and bolt-on polished alum fenderettes. Wheel well plates to be flush mounted.	$3,200
3340-0895	Smooth plate tandem axle wheel well painted job color. Includes bolt-on composite wheel well liners and bolt-on polished alum fenderettes. Wheel well plates to be flush mounted.	$5,210
3340-0896	Body wheelwell driver side compartments (2) approx 24" W x 6" H x 26" deep. A gasketed drop down door shall be installed on each compartment. Door material to match wheelwell finish.	$718
3340-0898	Rolled hose rack for (2) hose rolls, (1) 5" LDH 9" wide, (1) for the balance of tray. Includes (3) dividers attached to roll out tray in compartment L1.	$380
3340-0901	(3) Removable number plates with mounting brackets. Locate (1) each side of cab rearward of driver and officer doors, (1) driver side rear compartment face above taillights. Plates to be 5.25" tall X 5" wide and painted job color. Lettering and/or graphics not included.	$855
3340-0902	Body wheelwell compartments (4) approx 24" W x 6" H x maximum depth permissible without interference with hydraulic line(s) reservoir(s) etc. A gasketed drop down door shall be installed on each compartment. Door material to match wheelwell finish.	$1,435
3340-0907	Body mainframe and hosebed side assemblies for a 88" high body.	$2,457
3340-0908	Slip-on stainless steel dump elbow and 36" straight extension chute. Includes body mounted removable support arm, mounting brackets at rear of body for elbow and brackets for straight chute in R2	$1,755
3340-0909	Divider Long Fixed. To run full length of hose bed (front to rear) positioned fixed as close to center of hosebed ROM roll up door drum center as hose loading permits..	$611
3340-0910	Label wheel well doors with 1x3 labels to read applicable contents per location. Mechanically attached lable to each location required.	$21
3340-0911	A polypropylene storage box for foan cannisters shall be supplied. The storage shall be for fourteen (14) cannister 7 wide x 2 high. Each compartment shall be 6" wide x 11" high. There shall be NO back wall on the box.	$1,557
3340-0915	Body main frame and 46" wide hose bed for a 95" high rescue pumper body.	$3,336
3340-0918	Wheel Chocks Alum HGS Heavy Includes Brackets. Locate below compartment ahead of Drivers side rear wheels.	$552
3340-0919	Diamond plate Storage Box. Located on the driver side compartment top for long tool storage. Includes hinged raised compartment lid with turn latches and grab handle(wired to door ajar indicator). Box to be as long as possible.	$1,055
3340-0920	Bolt-in partition wall. Locate in lower rear compartment transverse area. Partition to separate R3 compartment from B1 compartment.	$161
3340-0925	Speedy dry hopper. Locate [#LOC]. Includes discharge chute in compartment directly below roof top compartment with close off valve and extension hose for ground level dispensing. Capacity of speedy dry hopper is 200 lbs.	$1,650
3340-0928	Body main frame and hose bed side assemblies for a 93" high pumper body with special location side sheet on right side to lower overhead ladder rack. No upper rear crossover hand rail with this option.	$3,666
3340-0929	Smooth plate tandem axle wheel well painted job color. Includes bolt-on composite wheel well liners and fenderettes painted Durabak black.	$4,021
3340-0930	Hosebed storage area (no pan) in forward area of hosebed with embossed diamond plate cover hinged forward with two grab handles and gas shock hold opens. The cover to open past 90 degree for ease of equipment loading and removal in the storage area.	$778
3340-0933	Body mainframe and hosebed side assemblies for a 88" high body.	$2,457
3340-0937	Tank sides to be raised 14" above booster tank. Includes raised sides and front of water tank. No hosebed slats to be installed.	$2,427
3340-0938	Provide access with covers on forward wall of compartment R3 to access to upper KLAMP-IT hardware for DOT storage bottles located in R2.	$191
3340-0943	Transverse compartment modification affecting rear side and rear compartments on rescue pumper body's. The transverse storage area running from side to side (lower area only). The compartments above the transverse each side to be full depth.	$1,157
3340-0947	Rolled hose rack for (3) hose rolls, (1) 50' of 1.75", (1) 25' of 3" and (1) 25' of 5. Includes adjustable (4) dividers attached to roll out tray(s) in compartment(s) L1, R1.	$605
3340-0948	The hose bed is to have the capacity for the following hose (unless otherwise specified on the approval drawing). Hose load shall be listed from driver to officer. Bed 1, 1000' of 5" hose, Bed 2, 200' of 2-1/2" hose, Bed 3, 300' of 2" hose, Bed 4, 200' of 3" hose, Bed 5, (2) areas each holding 200' of 3" hose seperated by a hinged false floor.	$626

3340-0949	Stokes storage with stops located in the drivers side upper header. Includes a lift-up rear access door (wired to door ajar) w/bent D-ring latch.	$1,750
3340-0952	Hosebed deflector box and access to the dry chem fill. Locate center of the hosebed at rear.	$553
3340-0953	Rub rail assembly constructed of 3" x 2" Black U.H.M.W. plastic. Bolted to the lower exterior perimeter edge of the apparatus body. Rub rail shall be mitered 45 degrees at leading and trailing end and notched for marker and warning lights clearance (where applicable).	$1,377
3340-0954	Stainless steel rear fender panels painted job color. (Recommended for FRP paint process compatibility!) Includes bolt-on stainless steel inner wheel well liners (not painted) and rubber outer fenderettes.	$1,451
3340-0955	Backboard storage sleeve. Locate in ladder tunnel. Rack to be approx 3"W x 18"H x 72"L.	$434
3340-0956	Compartment R1 to be notched for vertical exhaust in back forward corner of the compartment.	$280
3340-0957	Compartment R4 to be notched for deck gun piping in back rearward corner of the compartment.	$280
3340-0959	One (1) Vertical mount traffic cone holder shall be fabricated and installed to hold up to (8) 28" tall traffic cones with 12" bases (not included). The bracket shall be constructed of 1/8" aluminum smooth plate, bolted and mounted to the left rear panel step bumperette, inboard of the tail light assembly.	$280
3340-0961	Divider long fixed at the edge of the step-down in hosebed (officer side). Divider to run full length of hose bed (front to rear).	$518
3340-0962	Body main frame and hose bed side assemblies for a 97 in. high body.	$4,178
3340-0963	Hosebed storage pan smooth plate painted black Durabak. Locate in forward area of hosebed.	$973
3340-0964	Storage pan over eMAX transverse storage area(s) to be smooth plate painted black Durabak.	$582
3340-0969	Divider Reinforcement. To run full length of hose bed divider on top surface (front to rear). 3/4" extruded aluminum tubing welded to divider. Price per each divider.	$335
3340-0971	Stainless steel tag on wheel well area above each tire location. Tag to be engraved, silver with black lettering, and specify pressure, torque and size of each tire.	$220
3340-0975	Smooth plate painted tandem axle wheel well. Includes bolt-on composite wheel well liners and bolt-on polished alum fenderettes.	$3,223
3340-0976	Horizontal air bag module for four (4) customer furnished air bags. Bags will be Paratech Maxiforce brand and each bag will store with two (2) identical pieces of 3/4" plywood. Nylon buckle strap assembly shall be provided across the openings. Locate on floor of compartment L2. See specifications for details.	$1,259
3340-0978	Body mainframe and hosebed side assemblies for a 104" high body.	$5,892
3340-0979	Smooth plate single axle wheel well painted black Durabak. Includes bolt-on composite wheel well liners and bolt-on polished alum fenderettes.	$1,593
3340-0981	Divider Support to run full width of hosebed (side to side) at the front of the hosebed and towards the rear of the hosebed at top of the divider(s). Attach to each hosebed divider to provide additional support. The rear divider support to be located as far rearward as available space on upper rear hose bed allows for support mounting.	$394
3340-0983	All body and pump module compartments (if applicable) and/or storage areas (EXCEPT R1 compartment) to have no louvers or vents. Louvers or vents for compartment R1 are to located up high only.	$280
3350-0000	Hydraulic hose reel for use with Hurst brand tools. Includes 100' 1/4" hose (up to 5,000 PSI) and rollers (captive type). Location: [#LOC]. Hose Color: [#COL].	$2,551
3350-0001	Air Reel w/electric rewind. 12V with 100' .25" hose plumbed to the truck air system (unless otherwise specified). Location: [#LOC].	$2,804
3350-0002	Low Pressure Utility Air Hose Reel assembly with 175' low pressure air hose and mini panel. Locate in [#LOC].	$2,551
3350-0004	Low Pressure Utility Air Hose Reel assembly with 250' low pressure air hose and mini panel. Locate in [#LOC].	$2,691
3350-0009	Hydraulic hose reel for use with TNT brand tools. Includes 100' 1/4" hose (up to 10,500 PSI) and rollers (captive type). Location: [#LOC]. Hose Color [#COL].	$5,125
3350-0010	Hydraulic hose reel for use with Phoenix brand tools. Includes 100' 1/4" hose (up to 5,000 PSI) and rollers (captive type). Location: [#LOC]. Hose Color [#COL].	$2,551
3350-0011	Hydraulic hose reel for use with Code 3 brand tools. Includes 100' 1/4" hose (up to 5,000 PSI) and rollers (captive type). Location: [#LOC]. Hose Color [#COL].	$2,551
3350-0012	Hydraulic hose reel for use with Amkus brand tools. Includes 100' 1/4" hose (up to 10,500 PSI) and rollers (captive type). Location: [#LOC]. Hose Color: [#COL].	$5,125
3350-0013	Hydraulic hose reel for use with Hurst Centaur brand tools. Includes 100' 1/4" hose (up to 10,000 PSI) and rollers (captive type). Location: [#LOC]. Hose Color [#COL].	$5,125
3350-0014	Hydraulic hose reel for use with Genesis brand tools. Includes 100' 1/4" hose (up to 10,000 PSI) and rollers (captive type). Location: [#LOC]. Hose Color [#COL].	$5,125
3350-0015	Hydraulic hose reel for use with Holmatro brand tools. Includes 100' 1/4" hose (up to 10,000 PSI) and rollers (captive type). Location: [#LOC]. Hose Color [#COL].	$5,125
3350-0016	12' Lead/Supply Line for high pressure hydraulic reel. To be used with 10,000 PSI hyd reels. Locate on reel in [#LOC].	$872
3350-0017	30' Lead/Supply Line for high pressure hydraulic reel. To be used with 10,500 PSI hyd reels. Locate [#LOC].	$1,297
3350-0018	12' Lead/Supply Line for low pressure hydraulic reel. To be used with 5,000 PSI hyd reels. Locate [#LOC].	$699
3350-0019	30' Lead/Supply Line for low pressure hydraulic reel. To be used with 5,000 PSI hyd reels. Locate [#LOC].	$1,098
3350-0024	Dual hydraulic reel rollers mounted thru bolt-on bracket. Location(s): [#LOC].	$513
3350-0025	Hydraulic hose reel for use with TNT brand tools. Includes 100' 1/4" synthetic rubber hose (up to 10,500 PSI) and rollers (captive type). Location: [#LOC]. Hose Color [#COL].	$5,125
3350-0029	Route hydraulic lead line(s) to [#LOC].	$103
3350-0030	Low pressure utility air hose reel w/spring rewind. Includes 50' 3/8" low pressure air hose, rollers, ball stop and and shut-off valve accessible from ground. Loc: [#LOC].	$1,412

3350-0032	Akron utility air hose reel. Includes 200' 3/8" hose and reel mounted rollers (captive type). Loc: [#LOC].	$1,500
3350-0033	Akron hydraulic hose reel for use with Hurst brand tools. Includes 100' 1/4" hose (up to 5,000 PSI) and rollers (captive type). Location: [#LOC]. Hose Color: [#COL].	$2,371
3350-0034	Hydraulic hose reel for use with Holmatro Core Technology tools. Reel model EF2220-17-18 w/ 100' of CORE hydraulic hose and a 30' CORE Holmatro pigtail. Location: [#LOC]. Hose Color [#COL].	$8,118
3350-0036	Hydraulic hose reel for use with Hurst Centaur brand tools. Includes 150' 1/4" hose (up to 10,000 PSI) and rollers (captive type). Location [#LOC]. Hose Color [#COL].	$6,239
3350-0040	12' Lead/Supply Line for high pressure hydraulic reel. To be used with 10,500 PSI hyd reels. Locate on reel in [#LOC].	$916
3350-0041	30' Lead/Supply Line for high pressure hydraulic reel. To be used with 10,500 PSI hyd reels. Locate [#LOC].	$1,361
3350-0043	Akron hydraulic hose reel for use with Amkus brand tools. Includes 100' 1/4" hose (up to 10,500 PSI) and rollers (captive type). Location: [#LOC]. Hose Color: [#COL].	$3,658
3350-0045	Akron reel to be powder painted custom color. Requires approval from vendor on color. Location: [#LOC]. Reel Color: [#COL].	$129
3350-0046	8' Lead/Supply Line for high pressure hydraulic reel. To be used with hyrdraulic reels between 10,000 to 10,500 PSI. Locate: [#LOC].	$425
3350-0048	Low Pressure Utility Air Hose Reel assembly with 250' low pressure air hose. Locate in [#LOC].	$2,021
3350-0050	Dual hydraulic reel rewind switch panel. Includes mounting rewind switches towards center of bracket. Location: mounted between B1 hydraulic reels.	$264
3350-0052	6' Lead/Supply Line for high pressure hydraulic reel. To be used with 10,000 PSI hyd reels. Locate on reel in [#LOC].	$839
3350-0054	Hydraulic hose reel with Nexus couplings with swivels for use with TNT brand tools. Includes 60' 3/8" hose (up to 10,500 PSI) and rollers (captive type). Location: officer side front bumper. Hose Color: Black/Black with Blue shrink wrap every 10'.	$6,306
3350-0055	Hydraulic hose reel with Nexus couplings with swivels for use with TNT brand tools. Includes 100' 3/8" hose (up to 10,500 PSI) and rollers (captive type). Location: B1 driver side. Hose Color: Black/Black with Red shrink wrap every 10'.	$6,306
3350-0058	Streamline fittings for Hurst reels and tools. This covers hose to lead connections and 2 tool to reel connections.	$1,140
3350-0059	6' Lead/Supply Line for Holmatro Core hydraulic reel. To be used with Holmatro Core hyd reels. Locate on reel in [#LOC].	$1,073
3350-0060	Hydraulic hose reel for use with Holmatro Core Technology tools. Reel model EF2220-17-18 w/ 100' of CORE hydraulic hose. Location: [#LOC]. Hose Color [#COL].	$6,138
3350-0062	Hydraulic hose reel for use with Hurst brand tools. Includes rollers (captive type). Does not include hydraulic hose. Location: [#LOC].	$1,958
3350-0063	Low Pressure Utility Air Hose Reel assembly with 175' low pressure 1/2" air hose and mini panel. Locate in L2 offset rearward of cord reel, set back 24" from compartment opening with rewind switch located next to the breaker box, locate the air panel in L2 between lower air bag rack and adjustable shelves with protective shield above air panel, run reel plumbing to dunnage area forward of drivers side coffin compartment for the customer installed air compressor.	$2,701
3350-0065	Captive reel rollers for the air reel(s) shall be mounted through a bolt-on bracket. Includes rewind switch which is mounted on side wall. Location(s): [#LOC].	$768
3350-0066	16' Lead/Supply Line for low pressure hydraulic reel. To be used with 5,000 PSI hyd reels. Locate [#LOC].	$741
3350-0068	A lead line #8, 5,000 psi hydraulic hose line routed from IHT manifold to B2 lower rear wall.	$499
3350-0069	Hydraulic tool ports with TNT RV-120 remote actuation vlv. Quick connect fittings on vlv to be for Phoenix brand tools. vlv with tool fittings to be located on officer side of front bumper. Includes hyd supply lines run to B1.	$1,964
3350-0072	A lead line 5,000 psi hydraulic line routed from B2 lower forward wall to dunnage pan located MAS heat exchanger	$713
3350-0073	A return lead line 5,000 psi hydraulic line routed from B2 lower forward wall to dunnage pan located generator	$713
3350-0078	Hydraulic reels to be mounted in aluminum tray with a cutout for roller assembly. A 1" lip around roller tray assembly to contain any fluids that may leak from hyd reel. Location [#LOC].	$414
3350-0081	Raceway for Air Lines from Driver and Officer Roof Top compartments to rearward L3 compartment for Dealer Supplied and Installed Air Fill System. Locate raceway in ceiling of L3, rearward and as far back as possible.	$616
3350-0083	Hydraulic hose reel for use with Amkus brand tools. Includes rollers (captive type). Does not include hydraulic hose. Location: [#LOC].	$2,266
3350-0084	16' Lead/Supply Line for high pressure hydraulic reel. To be used with 10,500 PSI hyd reels, lines are red and black in color. Compatible with Amkus tool brand. Locate on reel in [#LOC].	$1,073
3350-0085	16' Lead/Supply Line for high pressure hydraulic reel. To be used with 10,500 PSI hyd reels, lines are yellow and black in color. Compatible with Amkus tool brand. Locate on reel in [#LOC].	$1,073
3350-0088	40' Lead/Supply Line for high pressure hydraulic reel. To be used with 10,500 PSI hyd reels. Locate: [#LOC].	$1,729
3350-0089	CMW model 6011-W3-H1 dual reel, low pressure working air and hydraulic hose reel combo. Includes 100' of 300 PSI blue air hose and 100' of 10,500 PSI red/black hydraulic hose, compatible with Amkus tools. Located on ceiling of compartment B1 offset to officer side.	$6,797
3350-0090	CMW model 6011 dual hydraulic hose reel for use with 10,500 PSI Amkus tools. Reel SHALL NOT be supplied with hose or ball stops. Located on ceiling of compartment B1 offset to driver side.	$4,766
3350-0091	15' Lead/Supply Line for high pressure hydraulic reel. To be used with 10,500 PSI hyd reels. Locate on reel in [#LOC].	$1,002
3350-0092	Hydraulic hose reel for use with Holmatro brand tools. Includes 60' of Core Technology hose installed (up to 10,000 PSI) and rollers (captive type). Location: [#LOC]. Hose Color: [#COL].	$4,874

3350-0098	45' Lead/Supply Line for low pressure hydraulic reel. To be used with 5,000 PSI hyd reels. Locate [#LOC].	$1,524
3350-0099	Hydraulic hose reel for use with Holmatro Core Technology tools. Reel model EF2220-17-18 w/ 80' of CORE hydraulic hose. Location: [#LOC]. Hose Color [#COL].	$5,447
3350-0100	31' to 40' Core Technology Lead/Supply Line for high pressure hydraulic reel. To be used with 10,000 PSI hyd reels. Locate on reel in [#LOC].	$1,796
3350-0101	Up to 10' Core Technology Lead/Supply Line for high pressure hydraulic reel. To be used with 10,000 PSI hyd reels. Locate on reel in [#LOC].	$1,219
3350-0102	Hydraulic reel rewind switch. Switch located [#LOC].	$121
3350-0104	8' Lead/Supply Line for high pressure hydraulic reel. To be used with 10,500 PSI hyd reels. Locate on reel in [#LOC].	$826
3350-0106	Air reel w/electric rewind 100' of .375" hose. Breathing Air to plumbed to the B/A cascade system for low pressure utility air. Includes 100' 3/8" low pressure air hose, rollers and ball stop (controls for reel included with breathing air system). Location: Roof top compartment abve R4 rearward.	$2,021
3350-0107	Air reel w/electric rewind 100' of .375" hose for low pressure utility air. Dealer is responsible for plumbing air reel to the cascade system. Includes 100' 3/8" low pressure air hose, rollers and ball stop. Location: L4 ceiling offset forward rearwar of cord reel.	$2,021
3350-0108	CMW model 6011 dual hydraulic hose reels for use with 5,000 PSI tools shall be provided and installed. Includes two (2) sets of 100' 1/4" twinline hose (up to 5,000 PSI), hose guides and ball stops. Includes (2) 30' lead/supply lines. Location: [#LOC]. Hose Color: [#COL].	$12,423
3350-0109	A side out and hinged roller assembly. Roller shall be Hannay Reels, 4 way roller 2.5" opening mounted on a slide out bracket attached up high on the side walls of compartment L3.	$331
3350-0111	Bulk Head Fittings, including (2) 3' Pig Tails. Locate R3 back wall offset forward and 10" off compartment floor.	$850
3350-0117	Captive roller assemblies for (1)cord reel and (1) air reel mounted thru bolt-on bracket. Includes mounting rewind switches adjacent to each roller for it respective reel on bracket. Locate in [#LOC].	$897
3350-0119	Akron utility air hose reel. Capacity for 200' 3/8" hose (hose not included) and reel mounted rollers (captive type). Loc: L3 forward.	$1,242
3360-0050	Adjustable compartment dividers shall be installed in each roof compartment. The divider shall span from front to rear and be adjustable left to right. The use of Unistrut or equal materials as required shall provide the adjustability for each divider. The divider plate shall be 3/16" smooth aluminum. Locate (1) divider in each roof top compartment.	$979
3365-0002	Recessed folding ladder storage compartment located [#LOC]. Compartment sized to store a 10' ladder with feet.	$585
3365-0003	Overhead Zico storage rack to have a job color painted door.	$240
3365-0004	(2) pike pole storage tubes. Locate inboard side of ladder rack with pike pole hooks stored in the up position.	$460
3365-0005	Drop Down Fold-A-Tank Rack. Rack to hold [#LOC] gallon portable tank.	$1,621
3365-0010	(3) pike pole storage tubes. Locate inboard side of rack with pike pole hooks stored in the up position.	$689
3365-0011	Floor mounted roll-out tray. Includes 250lbs. tray capacity. Mount on [#LOC] floor.	$690
3365-0012	Recessed folding ladder and pike pole storage compartment located [#LOC]. Compartment sized to store a 10' ladder with feet and (2) pike poles.	$918
3365-0020	Zico electric drop-down ladder rack. Includes spacer brackets with ladder rack controller located on the officer side pump panel.	$5,186
3365-0021	Manual Operated Aluminum Drop Down Ladder Rack. Includes (2) assist lift/lower handles and securing pins (accessable from ground) on each end.Ladder hold downs to secure (1) 2-section extension and (1) roof.	$2,443
3365-0023	Ladder storage through tank for (1) 2-section 24' extension, (1) 14' roof, (1) 10' attic with feet and (2) pike poles. Reduces selected water tank capacity by approximately 250 gallons for pumpers and 300 gallons for tankers.	$2,950
3365-0024	Ladder storage thru tank for (1) 3-section 35' extension, (1) 14' roof, (1) 10' attic with feet and (2) pike poles. Reduces selected water tank capacity by approximately 250 gallons for pumpers and 300 gallons for tankers.	$3,212
3365-0025	Attic ladder mounting brackets (PR). Locate [#LOC].	$326
3365-0026	Zico pike pole mounting brackets (PR). Locate on top of Zico drop-down ladder rack.	$174
3365-0027	Zico attic ladder mounting brackets (PR). Locate on top of Zico drop-down ladder rack.	$369
3365-0028	Hard Suction Storage Rack. Driver side compartment top. Includes spring hold downs and scuff plates behind spring mounts (as applicable).	$392
3365-0029	Hard suction storage box (pr). Stored (1) each side below "T" of tank. Includes hinged door with push-button latch.	$577
3365-0030	Double Hard Suction Storage Rack for 10' hard suction hoses. Driver side compartment top. Includes spring hold downs with scuff plates (as applicable)	$776
3365-0031	Hard Suction Storage Rack. Officer side in adjustable track above ladders (if applicable). Includes spring hold downs and scuff plates.	$408
3365-0032	Hard Suction Storage Box. Stored below driver side "T" of tank. Includes hinged door with push-button latch.	$290
3365-0033	Recessed pike pole storage compartment located [#LOC]. Compartment sized to store (2) pike poles.	$473
3365-0034	(2) aluminum pike pole storage tubes. Locate [#LOC].	$336
3365-0035	Hard Suction Storage Rack. Officer side compartment top. Includes spring hold downs and scuff plates behind spring mounts (as applicable).	$392
3365-0040	SCBA/Fire Extinguisher storage rack. Locate in [#LOC]. To hold (6) bottles- (2) wide/(3)high. Bottles to be stored angled upward in the compartment. The bottom and sides are to include ribbed rubber inserts.	$531
3365-0041	Hard suction storage box. Located in the officer side hose bed. Includes drop down door (wired to door ajar) w/push-button latch(es), hose bed style top and nylatron flooring (no divider). Box to hold [#LOC] tube(s).	$1,663

3365-0043	Triple Hard Suction Storage Rack. Driver side compartment top. Includes spring hold downs and scuff plates behind spring mounts (as applicable).	$1,163
3365-0046	The driver side full length tunnel to store (2) 6" x 10' hardsuction hoses. Each to be stored individually and accessed by a vertically hinged diamond plate door with a push-button latch. Door to wired to the door ajar indicator in the cab.	$595
3365-0047	The driver side half length tunnel to store (3) backboards. Each to be stored individually with stop bracket 75" back from opening, composite material on floor and accessed by a vertically hinged door at rear with a push-button latch. Door to wired to the door ajar indicator in the cab.	$638
3365-0048	Hard Suction Storage Box. Stored below officer side "T" of tank. Includes hinged door with push-button latch.	$290
3365-0051	Portable Tank Storage Box. Located in the officer side hosebed. Includes drop down door (wired to door ajar) w/push-button latches, hosebed style top and nylatron flooring (no divider). Box to hold [#LOC] gallon portable tank.	$1,663
3365-0052	Over the hosebed ladder rack. Includes framing (with a sanded finish) and mounting points. Ladder storage box to be center mounted with diamond plate front box.	$2,084
3365-0056	Ladder storage thru tank for (2) 6" x 10' hardsuction hoses, (2) pike poles and (1) 10' attic ladder. Provide retaining straps to hold the hardsuctions stationary when stored. Reduces selected water tank capacity by approximately 250 gallons.	$3,310
3365-0057	The driver side full length tunnel to store (3) 6" x 10' hardsuction hoses. Each to be stored individually and accessed by a vertically hinged access door with a push-button latch. Door to wired to the door ajar indicator in the cab.	$892
3365-0058	Recessed pike pole storage compartment located [#LOC]. Compartment sized to store (3) pike poles.	$707
3365-0059	SCBA/Fire Extinguisher storage rack. Locate in [#LOC]. To hold (4) bottles- (2) wide/(2)high. Bottles to be stored angled upward in the compartment. The bottom and sides are to include ribbed rubber inserts.	$356
3365-0060	Ladders to be enclosed in pump compartment. Smooth plate box to enclose ladders in pump area.	$481
3365-0061	Hard Suction Storage Racks. Driver side hose bed side with adjustable tracks. Includes spring hold downs and scuff plates behind spring mounts (as applicable).	$900
3365-0062	Hard Suction Storage Box. Stored below driver side "T" of tank. Includes DP hinged door with push-button latch.	$756
3365-0063	Hard Suction Storage Box. Stored below officer side "T" of tank. Includes DP hinged door with push-button latch.	$756
3365-0065	(4) Hard Suction Storage Racks. Driver side hosebed side with adjustable tracks. Includes spring hold downs and scuff plates behind spring mounts (as applicable)	$1,425
3365-0066	The driver side half length tunnel to store (1) stokes basket and (2) backboards. Each to be stored individually and accessed by a vertically hinged diamond plate door with a push-button latch. Door to wired to the door ajar indicator in the cab.	$638
3365-0069	Officer side hosebed storage box to store a 24' two section and 14' roof (nested). Access thru brushed stainless steel drop down door. Door to be secured with D-ring latch. Upper area of storage to be for storage of LDH hose. Ladders will extend into pump module storage pan. Provide box/ ladder stop in pump module pan.	$2,708
3365-0070	Recessed folding ladder and pike pole storage compartment located below officer side "T" of the tank. Compartment sized to store a 10' ladder with feet and (2) pike poles.	$1,373
3365-0074	SCBA/Fire Extinguisher storage rack. Locate in [#LOC]. To hold (6) bottles- (3) wide/(2)high. Bottles to be stored angled upward in the compartment. The bottom and sides are to include ribbed rubber inserts.	$531
3365-0075	Officer side vertical storage tunnel. For use with low hose bed. Tunnel to hold: [#LOC]. Includes vertical hinged rear diamond plate door(s) with push-button latch.	$2,092
3365-0077	(2) pike pole storage tubes. Locate outboard side of rack with pike pole hooks stored in the up position.	$460
3365-0078	(3) pike pole storage tubes. Locate outboard side of rack with pike pole hooks stored in the up position.	$689
3365-0079	2-arm ladder rack on officer side. The ladder rack includes amber lights on each end to visually indicate when the rack is in motion. Restricts the top folding step (if optioned) from closing completely. Includes mounting bracket (if required, matching rear compartment face or compartment wrap finish) for components mounted on rear compartment face.	$12,009
3365-0081	2-Arm Ladder Rack to be painted job color.	$3,096
3365-0083	Zico pike pole mounting brackets (PR). Locate [#LOC].	$174
3365-0085	Zico pike pole mounting brackets with straps (PR). Locate [#LOC].	$192
3365-0088	Double hard suction hose storage tray. Locate on inboard side of overhead ladder rack. Includes (2) securing straps per tray.	$857
3365-0089	Hardsuction Storage Box. Located in the driver side hosebed. Includes vertically hinged door (wired to door ajar) w/push-button latch and composite flooring. Box to hold (1) tubes.	$835
3365-0090	Officer side half length vertical storage tunnel. For use with low hosebed. Tunnel to hold: (2) backboards, (1) AEL 12' 2-section ladder, (1) 4' D-handled pike pole, (1) 8' pike pole and (1) 6' pike pole. Includes vertically hinged rear diamond plate door with push-button latch. Pike poles to be located down low in tunnel with backboards and ladder located above.	$1,572
3365-0091	Recessed folding ladder storage compartment located officer side just below hosebed. Compartment sized to store a 10' ladder with feet.	$699
3365-0092	(2) pike pole storage tubes. Locate in driver side roof top compartment with pike pole hooks stored in the up position.	$460
3365-0094	Storage tunnel access (contents to be noted). Includes vertically hinged door (to match material of pump access door) with push-button latch(s) and wired to door ajar indicator. Door to [#LOC] of the body/water tank.	$321
3365-0095	Rear mount beside tank storage tunnel contents. Includes brackets capable of securing (1) two section, (1) roof, (1) 10' attic with feet and (2) pike pole tubes.	$2,669

3365-0096	Zico Hydraulic Drop Down Ladder Rack. Includes diamond plate spacer brackets with ladder rack controller located on the officer side pump panel.	$6,771
3365-0097	12' Hard suction hose storage tray. Locate on inboard side of overhead ladder rack. Includes (2) securing straps.	$536
3365-0098	12' Hard Suction Storage Rack. Driver side compartment top. Includes spring hold downs and scuff plates behind spring mounts (as applicable)	$586
3365-0100	Hard Suction Storage Rack. Officer side compartment top. Includes spring hold downs and scuff plates behind spring mounts (as applicable). Rack to hold 5' hard suction.	$268
3365-0101	Officer side vertical storage tunnel. For use with low hosebed. Lower section of tunnel to hold: 2-Section 24', 14' roof, 10' attic and (2) pike poles. Upper section of tunnel to hold: 2-Section AEL-10 attic ladder and (1) 300' of 1.75" DJ hose. Upper section includes ladder stop 90" back from opening and bolt-in divider between ladder and hose storages. Includes vertically hinged rear diamond plate door(s) with push-button latch(es). The diamond compartment top of tunnel to be hinged for access to dry lay of hose.	$3,328
3365-0102	SCBA/Fire Extinguisher storage rack. Locate in [#LOC]. To hold (4) bottles- (4)wide/(1)high. Bottles to be stored angled upward in the compartment. The bottom and sides are to include ribbed rubber inserts.	$356
3365-0103	SCBA/Fire Extinguisher storage rack. Locate in [#LOC]. To hold (6) bottles- (6)wide/(1)high. Bottles to be stored angled upward in the compartment. The bottom and sides are to include ribbed rubber inserts.	$531
3365-0104	Double hard suction hose storage tray. Locate (1) each side on inboard side of overhead ladder rack(s). Includes (2) securing straps per tray. For use with 13' hard suction hoses.	$2,351
3365-0107	SCBA/Fire Extinguisher storage rack. Locate in [#LOC]. To hold (12) bottles- (4) wide/(3)high. Bottles to be stored angled upward in the compartment. The bottom and sides are to include ribbed rubber inserts.	$1,059
3365-0108	10' folding ladder with feet. Locate in officer side roof top compartment.	$699
3365-0109	(4) pike pole storage tubes. Locate inboard side of rack with pike pole hooks stored in the up position.	$915
3365-0110	Recessed pike pole storage compartment located below officer side "T" of the tank. Compartment sized to store (3) pike poles.	$707
3365-0111	Hard suction hose storage tray. Locate on [#LOC]. Includes (2) securing straps. For use with 13' hard suction hoses.	$1,032
3365-0112	Over the hosebed ladder rack. Includes framing (with a sanded finish) and mounting points. Ladder storage box to be adjustable side to side with diamond plate front box. The ladder storage rack to have locking points of driver side outboard, center and officer side outboard. The framework of the ladder rack to be 9.5" high.	$3,222
3365-0114	Recessed pike pole storage compartment located [#LOC]. Compartment sized to store (3) pike poles. Pike pole box to be 7" deep.	$1,288
3365-0115	Ladder storage thru tank for (1) 2-section 24' extension, (1) 14' roof, (1) 10' attic with feet and (3) pike poles. Reduces selected water tank capacity by approximately 250 gallons.	$3,016
3365-0116	Ladder tunnel to extend to rear of body (over pump/plumbing). Extension to be aluminum and bolt-on for removal for pump maintenance.	$870
3365-0118	(3) pike pole storage tubes. Locate [#LOC].	$504
3365-0120	SCBA/Fire Extinguisher storage rack. Locate in [#LOC]. To hold (12) bottles- (6) wide/(2)high. Bottles to be stored angled upward in the compartment. The bottom and sides are to include ribbed rubber inserts.	$1,059
3365-0122	Officer side vertical storage tunnel. For use with low hosebed. Tunnel to hold: 2-Section 24', 14' roof, 10' attic and (2) pike poles. Upper storage area to have hinged diamonad plate top for storage of misc. items. Includes vertically hinged rear diamond plate door(s) with D-ring latch.	$3,231
3365-0124	Recessed pike pole storage compartment located below officer side compartment top. Compartment sized to store (2) pike poles. Recessed box to be 10" high for Boston Roof Hooks.	$1,073
3365-0125	Officer side vertical storage tunnel. For use with low hosebed. Tunnel to hold: 2-Section 24', 14' roof, 10' attic, (6) pike poles and (2) 6" x 10' hardsuction hoses (individually vertically stacked). (2) pike poles will be in ladder tunnel and (2) in each hard suction storage. Includes vertically hinged rear diamond plate door(s) with push-button latch.	$2,966
3365-0128	(1) pike pole storage tubes. Locate [#LOC].	$169
3365-0129	Officer side half length vertical storage tunnel. For use with low hosebed. Tunnel to hold: (2) backboards, (1) 4' D-handled pike pole, (1) 8' pike pole and (1) 6' pike pole. Make box for 4' D-handle pike pole 56" long. Includes vertically hinged rear diamond plate door with push-button latch. Pike poles to be located down low in tunnel with backboards located above.	$1,572
3365-0130	OBSOLETE - USE HYDRAULIC - Zico Electric Drop Down Fold-A-Tank Rack. Rack to be capable to hold [#LOC] gallon portable tank. Locate on driver side of body. Includes diamond plate cover and mounting hardware.	$9,405
3365-0134	Double Hard Suction Storage Rack. Driver side compartment top. Includes spring hold downs with scuff plates (as applicable). For use with 11' hard suction hoses.	$1,377
3365-0135	Stop bracket set for Zico HLAS ladder rack. Optional bracket for additional ladder rack stability in the up position.	$227
3365-0137	Pike pole. Locate (1) pike pole on officer side compartment top with pike pole hook stored in the up position. Mount with tulip clip(s) for use with D-handle pike pole.	$99
3365-0138	SCBA/Fire Extinguisher storage rack. Locate in [#LOC]. To hold (9) bottles- (3) wide/(3)high. Bottles to be stored angled upward in the compartment. The bottom and sides are to include ribbed rubber inserts.	$797
3365-0143	Hard Suction Storage Rack. Locate: [#LOC]. Includes (1) spring hold down and scuff plates behind spring mount (as applicable). Includes diamond plate box with air deflector to hold end of hose in place.	$782
3365-0163	Hard Suction Storage Box Vert. Located in the [#LOC] hose bed. Includes vertical hinged door (wired to door ajar) w/push-button latches and nylatron flooring. Box to hold (2) 10' hard suction hoses vertical stacked.	$1,663

3365-0165	Double hard suction storage rack. One (1) rack located above the other. Officer side compartment top. Includes spring hold downs with scuff plates (as applicable).	$776
3365-0173	Hard Suction Storage Box. Stored below officer side just below the hosebed. Includes hinged door with push-button latch.	$621
3365-0177	Hold down brackets to secure a (3) section extension ladder.	$205
3365-0179	Officer side vertical storage tunnel behind reduced upper depth right side compartments. Tunnel to hold: 24' 2-section and 14' roof, plus (2) pike poles and a folding ladder. Includes vertically hinged rear smooth plate door with bent D-ring latch.	$2,092
3365-0183	Hard suction storage rack. Locate [#LOC]. Includes NFPA retaining strap(s).	$274
3365-0184	Zico hydraulic drop down portable tank rack. Rack located to [#LOC] of body. Rack sized for [#COL] gallon aluminum frame portable tank. The control switching to be located on the side pump panel with the rack being in full view of the operator during operations.	$5,655
3365-0185	Zico overhead ladder rack. Includes electrical relay with cover in compartment adjacent to the storage rack. Locate rack to [#LOC] of body. The control switching to be located at the pump module area with the rack being in full view of the operator during operations.	$6,784
3365-0186	Zico overhead portable tank rack. Includes electrical relay with cover in compartment adjacent to the storage rack. Locate rack to [#LOC] of body. Rack sized for [#COL] gallon aluminum frame portable tank.	$6,784
3365-0187	Zico drop down rack to have diamond plate cover between outboard rack assemblies.	$659
3365-0188	Zico drop down rack to have smooth plate cover between outboard rack assemblies. Cover to be painted job color.	$803
3365-0189	Manual drop-down portable tank storage rack. Includes forward and rearward securing clamps with manual releases. Locate rack to [#LOC] of body. Rack sized for steel framed [#COL] portable tank.	$1,929
3365-0190	Manual drop down rack to have diamond plate cover over the forward, rearward, upper and outboard sides. Includes hand rails along the outboard front and rear and (1) on each end mounted on the upper area.	$634
3365-0191	Manual drop down rack to have smooth plate cover over the forward, rearward, upper and outboard sides. Includes handrails along the outboard front and rear and (1) on each end mounted on the upper area. Cover to be painted job color.	$929
3365-0192	Internal aluminum frame portable tank storage with vertically hinged smooth plate door painted job color (wired to door ajar) with D-ring latch. Access door to be located to the rear of the [#LOC] body. Included is a composite material floor overlay and a tank stop for use with a [#COL] aluminum frame portable storage tank.	$769
3365-0193	Portable storage tank thru water tank. To be capable of storing a [#COL] aluminum frame portable storage tank. Storage thru tank will reduce overall gallon capacity of water tank.	$2,280
3365-0194	Double hard suction storage rack. Locate [#LOC]. Includes NFPA retaining strap(s).	$581
3365-0195	Hard suction hose storage tray. Locate on inboard side of [#LOC] overhead storage rack. Includes (2) NFPA retaining straps.	$432
3365-0196	Ladder storage in hosebed for the following: (1) 2-section extension, (1) roof ladder, (1) attic and (2) pike poles. Extension and roof ladders stored nested. Includes (1) hosebed divider with squared off upper rear, vertically hinged (to swing into hosebed area) door with latch (wired to door ajar indicator) and composite material overlay on hosebed flooring. Upper area open and main hosebed cover to be used to cover top area of ladder storage area. Storage located to [#LOC] of hosebed.	$1,163
3365-0197	Portable storage tank in hosebed for the following: [#COL] gallon aluminum frame tank. Includes (1) hosebed divider with squared off upper rear, vertically hinged (to swing into hosebed area) door with latch (wired to door ajar indicator) and composite material overlay on hosebed flooring. Upper area open and main hosebed cover to be used to cover top area of storage area. Storage located to [#LOC] of hosebed.	$1,163
3365-0198	Storage box for (1) 10' length of hard suction hose. Includes vertically hinged door with latch (wired to door ajar indicator). Reduces selected water tank capacity by approximately 100 gallons on Tankers. Locate to [#LOC] below "T" of water tank.	$655
3365-0199	Zico electric drop-down ladder rack. Rack located to [#LOC] of body. The control switching to be located on the side pump panel with the rack being in full view of the operator during operations.	$5,655
3365-0202	Hard Suction Storage Rack. Driver side in adjustable track above ladders. Includes spring hold downs and scuff plates.	$408
3365-0208	Horizontal ladder bracket. Location and type of ladder: in officer side of hosebed storage pan to hold Little Giant model 17.	$271
3365-0209	Officer side vertical storage tunnel. For use with low hosebed. Tunnel to hold: 2-Section 24', 14' roof, 10' attic and (2) pike poles. Includes vertically hinged rear diamond plate door with push-button latch. Upper storage area to have an open top and run full legnth of the body. Upper area to have hosebed style flooring.	$3,209
3365-0214	Hard suction storage thru tank for (2) 5" x 15' hard suction hoses. Includes vertical hinged door wired to door ajar with push button latch. Reduces selected water tank capacity by approximately 200 gallons.	$2,950
3365-0218	Recessed D-handle pike pole storage compartment located below officer side compartment top. Compartment sized to store (2) 6' D-handle pike poles.	$707
3365-0219	Diamond plate storage compartment located on officer side compartment top. Compartment sized to store (1) 10' ladder with feet and (2) 6' D-handle pike poles.	$707
3365-0220	Storage box for (1) 6" x 10' hard suction hose. Includes vertically hinged swing-out door with push-button latch (wired to door ajar). Box to be smooth plate and painted job color. Located [#LOC].	$564
3365-0221	Driver side vertical storage tunnel. For use with low hosebed. Tunnel to hold: 2-Section 24', 14' roof, 10' attic and (2) pike poles. Includes vertically hinged rear diamond plate door(s) with push-button latch.	$2,092
3365-0222	Upper hosebed storage area above driver side compartments and officer side ladder/storage tunnel or compartments as applicable. Upper storage areas to have an open top and run length of the hosebed area. Includes hosebed style flooring.	$2,037

3365-0223	Hard Suction Storage Rack. Officer side on compartment top. Rack to be 118" in length and be held back 9" from the front of the compartment top. Includes spring hold downs and scuff plates.	$408
3365-0226	Hosebed ladder storage box with diamond plate top. Located centered in hosebed and to secure from driver to officer: (1) 10' attic w/feet (in a box) w/(2) 10' pike pole tubes mounted on top, (1) PRL-12 & (1) PEL3-24. Ladders to be stored on beam. Included are (2) hosebed dividers with squared ends, diamond plate top and a vertically hinged diamond plate door (hinged to officer side) wired to the door ajar indicator.	$1,383
3365-0236	Officer side vertical storage tunnel behind reduced upper depth right side compartments. Tunnel to hold: 24' 2-section and 14' roof, plus (4) pike poles and a folding ladder. Includes vertically hinged rear smooth plate door with bent D-ring latch.	$2,427
3365-0237	Hard Suction Storage Rack. Rack to be 138" in length and rear of rack to be flush with rear compartment top. Rack to be located officer side in adjustable track above ladders (if applicable). Includes spring hold downs and scuff plates.	$408
3365-0238	Folding ladder and pike pole storage compartment located in driver side of hosebed. Includes drop down door with push button latch. Compartment sized to store a 10' ladder with feet and (2) pike poles.	$918
3365-0240	Hard Suction storage left side, Ladder storage right side, base, stainless, Wildland	$4,376
3365-0241	Hard suction storage on right side, Ladder storage on left side, option, stainless, Wildland	$4,513
3365-0242	Horizontal ladder bracket. Location and type of ladder: officer's side compartment top for a PEL3-24.	$271
3365-0244	Pre-connect storage box with hinged full length lid. Includes center divider and storage for (2) 1.75" DJ hose (200' each) with black dri-deck flooring and red vinyl end flap with hold-downs.	$712
3365-0245	Pike pole tubes in officer side storage tunnel to be modified to hold (1) ARH-60 and (1) ARH-72 pike poles.	$207
3365-0246	Officer side vertical storage tunnel behind reduced upper depth right side compartments. Tunnel to hold: 24' 2-section and 14' roof, plus (2) pike poles and a folding ladder. Includes vertically hinged rear 3/16" treadplate door with bent D-ring latch.	$2,233
3365-0253	Ladder storage thru tank for (2) 6" x 10' hardsuction hoses. Reduces selected water tank capacity by approximately 150 gallons.	$1,670
3365-0254	Hard suction storage box with cargo net cover at rear. Located in B1 compartment to be in-line with thru the tank tunnel.	$611
3365-0258	Recessed pike pole storage compartment located officer side "T" of the tank. Compartment sized to store (3) pike poles. Center pike pole will be a multi -purpose" hook.	$707
3365-0259	Recessed pike pole storage compartment located officer side just below the hosebed. Compartment sized to store (2) pike poles.	$473
3365-0260	Ladder storage thru tank for (1) 2-section 24' extension, (1) 14' roof, (1) 10' attic with feet, (3) pike poles and (1) backboard. Reduces selected water tank capacity by approximately 300 gallons.	$3,212
3365-0262	Double Hard Suction Storage Rack for 8' hard suction hoses. Driver side compartment top. Includes spring hold downs with scuff plates (as applicable)	$839
3365-0265	Recessed storage compartment located officer side just below hosebed. Compartment sized to store (1) 10' ladder with feet offset to left and (1) 6' pike pole offset to right, tube to be set back 6" from opening.	$837
3365-0267	Officer side vertical storage tunnel. For use with low hose bed. Tunnel to hold: [#LOC]. Includes vertically hinged rear smooth plate door(s) with push-button latch.	$2,092
3365-0270	Stainless steel scuff plate mounted full height of tank to protect paint from hard suction handles. Located at each end of hard suction hose.	$248
3365-0272	Hard Suction Storage Box. Located in the driver side hosebed. Includes vertical hinged door (wired to door ajar) w/push-button latches and nylatron flooring. Box to hold two (2) 6" X 10' hard suction hoses.	$1,663
3365-0275	Hard suction storage rack for (1) 6" X 14' suction hose. Locate [#LOC]. Includes NFPA retaining strap(s).	$416
3365-0276	Zico pike pole mounting brackets (PR). Locate on top of Zico drop-down ladder rack. Brackets to be for D-ring pike poles.	$174
3365-0278	Officer side vertical storage tunnel. For use with low hosebed. Tunnel to hold: 2-Section 24', 14' roof, 10' attic and (2) pike poles. Includes vertically hinged rear diamond plate door(s) with push-button latch. The pike poles and attic ladder to be stored below the 2-section and roof ladders. Ladder tunnel will not extend to top of the body, the area above the ladder tunnel to have hosebed style flooring.	$3,209
3365-0280	Hard Suction Storage Box. Located horizontal in the officer side hosebed. Includes vertical hinged door (wired to door ajar) w/push-button latches and nylatron flooring. Box to hold two (2) 6" X 10' hard suction hoses.	$1,663
3365-0281	Hard Suction Storage Box. Located horizontal in the officer side hosebed. Includes vertical hinged door (wired to door ajar) w/push-button latches and nylatron flooring. Box to hold two (2) 6" X 13' hard suction hoses.	$1,663
3365-0283	Divider Long. To run full length of hose bed above ladder tunnel (front to rear).	$518
3365-0284	Officer side vertical storage tunnel behind reduced upper depth right side compartments. Tunnel to hold: 28' 2-section and 16' roof, (2) pike poles and a folding ladder, plus two 10' lengths of 6" hard suction hose above ladders together with a skinny backboard. Where ladders extend into the pump enclosure, they shall be enclosed from the elements with aluminum treadplate.	$1,793
3365-0285	Officer side vertical storage tunnel. For use with low hosebed. Tunnel to hold: 2-Section 20', 12' roof, 10' attic and (2) pike poles. Includes vertically hinged rear smooth plate door (to accommodate graphics/striping) with push-button latch. Upper storage area to have an open top and run full length of the body. Upper area to have hosebed style flooring.	$3,209
3365-0286	Officer side vertical storage tunnel behind reduced upper depth compartments. Tunnel to hold: 24' 2-section and 14' roof, plus (2) pike poles and a folding ladder. Above ladders is storage area for a sheet rock hook and a pike pole with D-handle, both 4' in length. Stops shall be provided ahead this storage area approximately 60" from the rear opening to prevent these items from sliding forward during transport. Includes vertically hinged rear smooth plate door with bent D-ring latch.	$2,190

3365-0289	Hard suction hose storage tray. Locate on inboard side of overhead ladder rack. Includes spring hold downs and scuff plates behind spring mounts (as applicable).	$456
3365-0290	Ladder storage thru tank for (1) 3-section 30' extension, (1) 14' roof, (1) 10' attic with feet and (2) 10' pike poles. Reduces selected water tank capacity by approximately 300 gallons for pumpers and 350 gallons for tankers.	$2,950
3365-0292	Hard Suction Storage Box. Located in the driver side hosebed. Includes vertical hinged door (wired to door ajar) w/push-button latches and nylatron flooring. Box to hold one (1) 6" X 12' hard suction hoses.	$832
3365-0293	Cover diamond plate for hydraulic ladder rack power supply. Location: [#LOC].	$212
3365-0294	There shall be a metal plate mounted to the side of the portable tank rack to assist in the application of the NFPA stripe.	$176
3365-0295	Manual drop down portable tank storage rack. Includes forward and rearward securing clamps with manual releases. Locate rack to [#LOC] of body. Rack sized for an aluminum framed [#COL] portable tank.	$1,929
3365-0297	(1) Pike pole storage tube, pike pole hook stored in the up position. (1) Dry wall hook storage using brackets to secure in place rather than tube. Locate inboard side of rack.	$569
3365-0298	(5) Pike pole storage tubes. Locate inboard side of rack with pike pole hooks stored in the up position.	$1,311
3365-0299	Hard suction storage box. Located in the officer side hose bed. Includes a swing open door, vertical hinged on the left hand side (inboard) and wired to door ajar w/push-button latch(es), hose bed style top and nylatron flooring (no divider). Box to hold [#LOC] tubes.	$1,663
3365-0302	Provision to store (4) Fire Department supplied 50' lengths of 2-1/2" high rise hose packs on right side compartment top.	$1,209
3365-0303	Four (4) pike poles and a folding ladder tucked behind ground ladders on the adjustable ladder tracks.	$1,172
3365-0304	Hard suction storage within the hosebed. (1) Hard suction tube shall be located on each side of the hosebed center divider. The rear and top hosebed covers shall be used for access.	$1,663
3365-0305	Provision to store (4) Fire Department supplied 50' lengths of 2-1/2" high rise hose packs on right side compartment top. (6) PAC ADJUSTAMOUNT brackets to secure hose.	$1,583
3365-0306	Backboard storage sleeve with containment strap(s). Located in L1 and R1 compartments just below compartment offset to be approximately 9" high x 27" wide as clearance permits. Locate as far forward as possible.	$1,253
3365-0307	Hard suction storage box, horizontal side by side. Located in the officer's side hose bed. Includes lift-up door (wired to door ajar) w/bent D-ring latch, hose bed style top and flooring. Box to hold (2) 6" x 10' long tubes.	$1,663
3365-0308	Hard Suction Storage Rack. Officer side in adjustable track below ladders (if applicable). Includes spring hold downs and scuff plates.	$408
3365-0310	Hard suction storage box, smooth plate side wall construction painted job color. Located on the [#LOC]. Includes vertically hinged door(s) (wired to door ajar) w/D-Ring latch(s). Box to hold (3) tubes and to extend to the back side of the L2 compartment and to be approximately the same height as L1, L2 compartments.	$1,663
3365-0311	Hard suction storage box with (2) pike poles (pr). Stored (1) each side below "T" of tank. Includes hinged door with push-button latch.	$1,090
3365-0312	Ladder storage thru tank for AlcoLite ladders (1) 3-section 35' extension, (1) 16' roof, (1) 10' attic with feet and (2) pike poles. Reduces selected water tank capacity by approximately 250 gallons for pumpers and 300 gallons for tankers.	$3,212
3365-0313	Double hard suction storage rack. One (1) rack located above the other. Officer side in ladder track. Includes spring hold downs with scuff plates (as applicable). Rack shall accommodate 3" hard suction hose.	$775
3365-0316	Storage box for (1) 15' length of hardsuction hose. Includes vertically hinged door with latch (wired to door ajar indicator). Locate [#LOC] side below "T" of water tank.	$764
3365-0319	Hard Suction Storage Rack. Driver side compartment top. Includes spring hold downs and scuff plates behind spring mounts (as applicable).	$392
3365-0320	Storage box on officer side compartment top with hinged full length side hinged down with butterfly latches (wired to door ajar). Box to be approximately 116" long x 12" high x 12" deep. Storage is for 250' of 2.5" DJ hose with nozzle for hi-rise pac with black dri-deck flooring.	$1,073
3365-0322	Recessed New York hook and pike pole storage compartment located officer side just below the "T" of the tank to include a smooth plate door with thumb latch(s). Compartment sized to store (2) Fire Hooks Unlimited New York Hook Model RH-6 and RH-8 and (2) pike poles.	$918
3365-0323	Double hard suction storage rack. Two (2) 2.5" or 3" x 10` hard suction hoses. One (1) next the other horizontally mounted. Includes spring hold downs with scuff plates (as applicable). Locate: Driver side compartment top.	$776
3365-0324	Hard suction storage boxes welded one each side to upper body hose bed side sheets, to be painted as applicable. Includes vertically hinged brushed stainless steel rear access doors and aluminum hose trays with forward travel limit stops. Requires minimum 88" high pumper body.	$2,737
3365-0325	Officer side vertical storage tunnel behind reduced upper depth right side compartments. Tunnel to hold: 35' 3-section and 14' roof, (2) pike poles and a folding ladder. Where ladders extend into the pump enclosure, they shall be enclosed from the elements with aluminum treadplate. Includes vertically hinged rear smooth aluminum door with bent D-ring latch.	$2,092
3365-0326	Recessed pike pole storage compartment located below officer side "T" of the tank. Compartment sized to store (2) pike poles.	$707
3365-0328	Officer side vertical storage tunnels. For use with low hose bed. Tunnels to hold [#LOC]. The upper ladder tunnel shall be full length of hose bed, same width as lower ladder tunnel. The upper ladder tunnel compartment shall be fully enclosed except for an open top/roof which will be open to the elements. Includes vertically hinged rear .1875" smooth plate doors with D-ring latch on each door accessible at the rear of body.	$2,225

3365-0329	Ladder storage thru tank for (1) 2-section 24' extension, (1) 16' roof, (1) 10' attic with feet and (2) pike poles. Reduces selected water tank capacity by approximately 250 gallons for pumpers and 300 gallons for tankers.	$2,950
3365-0331	Recessed folding ladder and pike pole storage compartment located right rear of body up high. Compartment sized to store a 10' ladder with feet and (2) 12' pike poles.	$1,064
3365-0332	Recessed pike pole storage compartment located left rear of body up high. Compartment sized to store (4) 10' pike poles.	$943
3365-0333	Backboard storage for use with low hose bed stroage tunnel only. Storage for (1) backboard vertically in officer side storage tunnel. Includes stop bracket at the front.	$384
3365-0334	Ladder Storage Box. Located in the officer side hosebed. The top shall be enclosed using the hosebed cover, the rear access shall be included in the vinyl rear flap as part of the hose bed cover (hinged door not included), The hosebed cover and rear flap shall be sold separately. Box to hold (1) Alcolite PEL 24' 3-section, (1) Alcolite PRL 12' roof, (1) Alcolite FL 10' attic ladder, (2) backboards and (2) pike poles.	$2,866
3365-0335	Miscellaneous storage in hosebed above the ladder tunnel. Upper area open and main hosebed cover to be used to cover top area of the storage area. There is to be a bolted end plate at the rear of the storage area, horizontal adjustable tracks 60" from the rear mounted forward with a divider.	$379
3365-0336	Horizontal ladder storage with forward diamond plate box and and hold-down bracket. Location and type of ladder: [#LOC].	$506
3365-0337	Two (2) pike poles and a folding ladder tucked behind ground ladders on the adjustable ladder tracks on the officer's side outside of the hose bed.	$1,172
3365-0338	Hard Suction Storage Box. Located in the [#LOC] hose bed. Includes vertical hinged door (wired to door ajar) w/push-button latches (without nylatron flooring as preferred by customer). Box to hold (2) 10' hard suction hoses.	$1,663
3365-0339	Hard Suction Storage Box. Located in the [#LOC] hose bed. Includes vertical hinged door (wired to door ajar) w/D-Ring latch(s) and Nylatron flooring. Box to hold (2) 10' hard suction hoses.	$1,735
3365-0340	Dual hard suction hose storage with stops located (above ladders) in the officer side ladder storage tunnel. Includes a common taller rear access door (wired to door ajar) w/bent D-ring deadbolt type latch.	$1,174
3365-0342	Dual hard suction hose storage with stops located in the officer side upper header. Includes a lift-up rear access door (wired to door ajar) w/bent D-ring latch.	$1,888
3365-0343	Hard suction hose storage tray. Locate on top of Zico drop-down portable tank rack.	$863
3365-0344	Hard suction storage box. Located in the officer side hose bed. Includes a swing open diamond plate door, vertically hinged on the right hand side (outboard) and wired to door ajar w/push-button latch(es), hose bed style top and nylatron flooring (no divider). Box to hold [#LOC] tubes.	$1,663
3365-0345	Officer side horizontal storage tunnel between top of tank and below hose bed floor. Tunnel to hold: up to a 24' 2-section and 14' roof, up to (3) pike poles and a folding ladder. Includes a horizontally hinged lift-up rear smooth plate door with bent D-ring latch and a gas tube hold-open.	$2,233
3365-0346	Storage box for (1) 12' length of hard suction hose. Includes vertically hinged door with latch (wired to door ajar indicator). Locate to [#LOC] below "T" of water tank.	$655
3365-0347	Recessed folding ladder storage compartment located driver side just below hosebed. Compartment sized to store a 10' ladder with feet.	$699
3365-0348	Ladder storage box in driver side of hosebed. Dimensions to be 25" wide x 8" high x length of hosebed. Includes ladder stop 66" back from opening and diamond plate drop down door with a D-ring latch (wired to door ajar indicator) and composite material overlay on hosebed flooring.	$1,163
3365-0350	Hard suction storage box (pr). Stored (1) each side below "T" of tank. Storage boxes shall be lined with plastic liner and include hinged door with push-button latch. Inside compartment and tube tunnel to be enlarged in depth to fit strainers to be pre-connected as stored.	$1,263
3365-0352	Portable Tank Storage Box. Located in the officer side hosebed. Includes vertically hinged door (wired to door ajar) w/push-button latches (hinge to the exterior and latch to the interior), hosebed style top and nylatron flooring (no divider). Box to hold [#LOC] gallon aluminum framed Fol-da-tank portable tank.	$1,663
3365-0353	Double hard suction hose storage tray. Locate inboard side of overhead ladder rack(s) (1) stacked above the other. Includes (2) securing straps per tray. For use with 10' hard suction hoses.	$2,351
3365-0354	Ladder storage thru tank for (1) 2-section 24' extension, (1) 14' roof, (1) 10' attic with feet. Ladders shall be stored vertically or on their side (ILO horizontal/flat). (1) 10' Folding ladder and (2) pike poles stacked over and under each other adjacent ladder storage. Tunnel shall be approx centered in rear body. Reduces selected water tank capacity by approximately 300 gallons.	$3,270
3365-0355	Hard suction Storage Box located in the drivers side roof top compartment. The storage to be boxed off inside roof top compartment. Includes vertical hinged smooth plate door (wired to door ajar) w/push-button latch. Storage to hold [#LOC] 6" x 10' hard suction hoses.	$2,135
3365-0356	Ladder storage thru tank for (1) 2-section 24' extension, (1) 14' roof, (1) 10' attic with feet and (2) pike poles. Provide retaining straps to hold contents stationary. Reduces selected water tank capacity by approximately 250 gallons for pumpers and 300 gallons for tankers.	$3,030
3365-0360	Driver side vertical storage tunnel behind reduced upper depth left side compartments. Tunnel to hold: up to (3) 10' lengths of 6" hard suction hose. Includes vertically hinged rear smooth plate door with bent D-ring latch.	$2,190
3365-0361	Zico hydraulic drop down portable tank rack. Rack located to [#LOC] of body. Rack sized for [#COL] gallon aluminum frame portable tank. The control switching to be located driver side rear compartment face with the rack being in full view of the operator during operations.	$5,807
3365-0363	Hard suction storage rack. Locate:[#LOC]. Includes NFPA retaining strap(s). For use with 15' hard suction hose.	$535
3365-0364	Ladder storage box. Located in the officer side hose bed. Includes vertical hinged door (wired to door ajar) w/push-button latch(es), hose bed style top and nylatron flooring (no partition). Box to hold (1) 20' 2-Section and (1) 12' roof.	$1,663

3365-0365	Officer side vertical storage tunnel. For use with low hosebed, fully enclosed and extended to pump area with drain holes forward in tunnel flooring. Tunnel to hold: 2-Section 24', 14' roof, 10' attic and (2) pike poles. Includes vertically hinged rear smooth plate door(s) with push-button latch. The pike poles and attic ladder to be stored below the 2-section and roof ladders. Ladder tunnel will not extend to top of the body, the area above the ladder tunnel to have hosebed style flooring.	$3,520
3365-0366	Double Hard Suction Storage Rack. Driver side compartment top. Includes spring hold downs with scuff plates (as applicable). For use with 14' hard suction hoses.	$1,377
3365-0367	Zico hydraulic drop down portable tank rack. Rack located to [#LOC] of body. Rack sized for [#COL] gallon aluminum frame portable tank. The control switching to be located on the side pump panel with the rack being in full view of the operator during operations.	$5,655
3365-0368	Zico hydraulic drop down portable tank rack. Rack located to [#LOC] of body. Rack sized for [#COL] gallon aluminum frame portable tank. The control switching to be located officer side rear compartment face with the rack being in full view of the operator during operations.	$5,655
3365-0371	The storage tunnel directly behind the upper area of the officer side compartments shall be fully enclosed as it extendes into the pump module area with drain holes forward in tunnel.	$628
3365-0373	(2) D-handle pike pole storage tubes 10' on length. Locate outboard side of ladder rack with pike pole hooks stored in the up position.	$529
3365-0375	Hard suction storage box. Located in the driver side hose bed. Includes a swing open diamond plate door, vertical hinged on the right hand side (inboard) and wired to door ajar w/"D"-ring latch(es), hose bed style top and nylatron flooring (no divider). Box to hold [#LOC] tubes.	$1,663
3365-0377	Fire extinguisher storage rack to hold (3) extinguishers in a single horz row. The rack shall be raised 3" on the open end to allow the extinguishers to slide back into the box at an angle. Bottom and sides to include ribbed rubber inserts. Each opening to have a vertically mounted strap. The rearward opening shall be 15" wide, the middle and forward opening to be 10" wide. The opening shall be 18" high. The top shall be flat and have a 2" lip up for storing items as a permanent shelf. Locate floor mtd in [#LOC].	$696
3365-0378	Ladder Storage Box. Located in the officer side hosebed. The top shall be enclosed using hosebed style top. Includes drop down door (wired to door ajar) W/ D-ring latch. Box to hold (1) Alcolite FEL 24' 2-section, (1) Alcolite FRL 14' roof, (1) Alcolite FL 10' attic ladder and (5) 10' pike poles (NY hooks).	$2,866
3365-0379	Fire extinguisher storage rack to hold (3) extinguishers in a single horz row. Bottom and sides to include ribbed rubber inserts. Each opening to have a vertically mounted strap. The top shall have a 1" lip up for storing items.Locate floor mtd in [#LOC].	$696
3365-0380	Zico pike pole mounting brackets (PR). Locate outboard on top of Zico drop-down ladder rack.	$174
3365-0382	Hose bed storage compartment for Low Hosebed body. Contents stored as follows from left to right: (1) Model 17 Little Giant ladder extended, (2) pike poles (6' with drywall hook, 10' with dry wall hook)above the Little Giant ladder, (1) 10' folding ladder above the Little Giant ladder, (2) 6" x 10" hard sution hoses.	$2,548
3365-0383	Officer side vertical storage tunnel behind reduced upper depth right side compartments. Tunnel to hold: 24' 2-section and 14' roof, plus (2) pike poles and a folding ladder. Does not include a door.	$1,841
3365-0384	Single hard suction hose storage with stop located (above ladders) in the officer side ladder storage tunnel. Includes a common taller rear access door (wired to door ajar) w/bent D-ring deadbolt type latch.	$1,174
3365-0387	Hard Suction Hose Rack for 2.5" or 3" Hose located inboard on hydraulic ladder rack (Each)	$253
3365-0389	Hard suction hose storage tray. Locate on top of Zico drop-down ladder rack. Mount secure straps further outboard to accommodate longer hard tube or 10' hard suction tube with a Kochek BS60 Barrel strainer pre-attached.	$863
3365-0390	Ladder storage box. Located in the driver side hose bed. Includes vertically hinged door (wired to door ajar) w/push-button latch(es), hose bed style top and nylatron flooring (no partition). Box to hold (1) 22' 3-Section, (1) 10' roof and (1) 8' folding ladder	$1,663
3365-0395	Fire Extinguisher storage rack. Locate in B1 mounted to ceiling and/or cpmpartment walls as applicable to drop down and exit just below the roll up door when opened. To hold (3) bottles- (3)wide/(1)high. Each box to be 11" high x 11" wide. The bottom and sides are to include ribbed rubber inserts. The storage box shall have a drop down door with a latch to secure the cylinders in place during transit.	$438
3365-0397	Officer side vertical storage tunnels. For use with low hose bed. Tunnels to hold: [#LOC]. The upper ladder tunnel shall be full length of hose bed, same width as lower ladder tunnel. The upper ladder tunnel compartment shall be fully enclosed except for an open top/roof which will be open to the elements.	$2,438
3365-0398	Hard suction storage box (pr). Stored (1) each side below "T" of tank. Includes hinged door with push-button latch. Tube tunnels to extend through raised rear enhanced extended compartment steps to gain additional capacity for longer length tube storage. Tube tunnels to fit One (1) 6" X 12' Hard suction tube on each side.	$1,335
3365-0400	Officer side vertical storage tunnels. For use with low hose bed. Tunnels to hold: [#LOC]. The upper tunnel to have enclosed storage for (2) 10' X 6" hard suction hoses (stacked) with (2) pike poles with multipurpose hooks (recessed 5" fwd of door). The upper area above and forward of the fully enclosed hard suction / pike pole storage to be open top/roof which will be open to the elements includes drain hole(s) as required. Includes vertically hinged rear .1875" smooth plate doors with D-ring latch on each door accessible at the rear of body.	$3,248
3365-0401	Officer side vertical storage tunnel behind reduced upper depth right side compartments. Tunnel to hold: 24' 2-section and 16' roof, plus a folding ladder. Includes vertically hinged rear smooth plate door with bent D-ring latch.	$1,932
3365-0403	Zico model HLAS-HS-2KIT, Double hard suction hose storage tray. Locate on inboard side of overhead ladder rack. Includes (2) securing straps per tray.	$845
3365-0404	Hosebed storage box. Located in the center of the hosebed. To hold (1) backboard, (1) 10' pike poles,(1) 8' pike pole, (1) 6' NY style pike pole, (1) 6' pike pole and (1) 10' attic ladder with access from a vertically hinged diamond plate door (wired to door ajar) with a push-button latch.	$1,889

3365-0405	Hose tray storage with stop located (above ladders) in the officer side ladder storage tunnel. Includes a common taller rear access door (wired to door ajar) w/bent D-ring deadbolt type latch.	$1,174
3365-0406	Portable Tank Storage Box. Located in the driver side hosebed. Includes drop down door (wired to door ajar) w/push-button latches, hosebed style top and nylatron flooring (no divider). Box to hold [#LOC] gallon portable tank.	$1,663
3365-0407	(2) Pike pole storage tubes with locking end. Locate in the driver side hosebed area to extend into the hose reel area. (1) 6' and (1) 8' pike pole. Pike poles are not includes (sold separately).	$550
3365-0408	Hard Suction Storage Box. Located in the officer side hosebed. Includes vertical hinged door (wired to door ajar) w/push-button latches and nylatron flooring. Box to hold one (1) 6" X 10' hard suction hose.	$832
3365-0409	Ladder storage box. Located in the officer side hose bed. Includes vertically hinged diamond plate door (wired to door ajar) w/push-button latch, open top and nylatron flooring (no partition). Box to hold (1) 20' 2-Section and (1) 12' roof, (1) 10 foot attic ladder with feet. and (2) 10' pike pole tubes.	$2,001
3365-0410	Ladder Storage Box. Located in the officer side hosebed. The top shall be enclosed using the hosebed cover, the rear access shall be equipped with an outboard vertical hinged door with thumb latch and moon spring hold open, The hosebed cover and rear flap shall be sold separately. Box to hold (1) Alcolite PEL 24' 3-section, (1) Alcolite PRL 12' roof with separete divider and (1) Model 13 Little Giant	$2,866
3365-0414	Backboard stop bracket to be located approximately 80" back in officer side of ladder tunnel.	$243
3365-0416	Hosebed ladder storage box with diamond plate top. Located centered in hosebed and to secure from driver to officer: (3) 2.5" x 10' hard suction tubes, (2) 10' pike pole tubes mounted down low, (1) 925-A 22' 3 Sect & (1) 775-A 10' Roof. Ladders to be stored on beam. Included are (2) hosebed dividers with squared ends, diamond plate top and a vertically hinged diamond plate door (hinged to officer side) wired to the door ajar indicator.	$1,383
3365-0417	Zico attic ladder mounting brackets (PR). Locate [#LOC].	$232
3365-0420	Dual hard suction hose storage with stops located in the drivers side upper header. Includes a lift-up rear access door (wired to door ajar) w/bent D-ring latch.	$1,888
3365-0422	Ladder storage through tank for (1) 2-section 24' extension, (1) 14' roof, (1) 10' attic with feet,(2) pike poles, and (2) backboards. Reduces selected water tank capacity by approximately 350 gallons.	$3,430
3365-0423	Recessed folding ladder storage compartment located [#LOC]. Compartment sized to store a 10' ladder with feet.	$585
3365-0426	(3) Hard Suction Storage Racks. Driver side hosebed side with adjustable tracks. Includes spring hold downs and scuff plates behind spring mounts (as applicable).	$1,070
3365-0427	Hard suction storage box. Located on the driver side compartment top. Includes vertical hinged door at the rearward of the apparatus as installed that swings outward (wired to door ajar) w/push-button latch, To be constructed of .125" thick aluminum tread plate with nylatron flooring. Box to hold one (1) 6 inch dia. x 10 foot hard tube.	$1,436
3365-0428	Hard suction storage box. Located on the officer side compartment top. Includes vertical hinged door at the rearward of the apparatus as installed that swings outward (wired to door ajar) w/push-button latch, To be constructed of .125" thick aluminum tread plate with nylatron flooring. Box to hold one (1) 6 inch dia. x 10 foot hard tube.	$1,436
3365-0429	Hard suction Storage Box located in the driver side roof top compartment. The storage to be boxed off inside roof top compartment. Includes vertical hinged smooth plate door (wired to door ajar) w/push-button latch. Storage to hold (2) 6" X 12' hard suction tubes.	$2,135
3365-0431	Hard suction storage box. Located in the officer side hose bed. Includes vertically hinged diamond plate door (wired to door ajar) with D-Ring latch, hose bed style top and nylatron flooring (no divider). Box to hold 3 tube(s).	$1,663
3365-0435	Nylon black strap with clip release for use with Drv/Ofc side storage tunnel.	$93
3365-0436	Ladder storage box. Located in the officer side hose bed. Includes vertically hinged door (wired to door ajar) w/push-button latch(es) and nylatron flooring (no partition). Box to hold (1) 20' 2-Section and (1) 12' roof.	$1,663
3365-0437	Officer side vertical storage tunnel. For use with low hose bed. Tunnel to hold: [#LOC]. Includes vertically hinged rear diamond plate door(s) with D-ring latch.	$2,144
3365-0438	Storage tunnel above B1 capable of holding: (1) Ferno Washington Model 71 stokes basket. Install (1) divider 26" off driver side wall full length with nylatron on floor and stop set at 90". Right side remaining area will have a stop set at 72".	$1,050
3365-0439	Recessed folding ladder and pike pole storage compartment located right rear of body up high. Compartment sized to store a 10' ladder with feet and (3) 10' pike poles. The pike poles shall be (1) mounted from the top and (2) at the bottom of the box.	$1,294
3365-0440	Zico HHS-TM-1 hard suction storage rack. Locate on the Zico Hydraulic Portable Tank System. Includes NFPA retaining strap(s).	$463
3365-0441	Zico model HLAS-HS-1KIT, Single hard suction hose storage tray. Locate on inboard side of overhead ladder rack. Includes (2) securing straps.	$533
3365-0442	Officer side vertical storage tunnel. For use with low hosebed. Tunnel to hold: 2-Section 24', 14' roof, 10' attic,(2) pike poles, and (1) backboard. Includes vertically hinged rear diamond plate door(s) with push-button latch. Includes upper area of ladder tunnel to have (2) roof top compartments. Includes hinged raised compartment lids with turn latches. Each lid to have (1) bracket mounted light and to be wired to door ajar indicator in cab.	$3,628
3365-0443	Hard suction storage rack for (1) 6" X 8' suction hose. Locate [#LOC]. Includes NFPA retaining strap(s).	$297
3365-0445	Single hard suction hose storage without stop located (above ladders) in the officer side ladder storage tunnel. Includes a common taller rear access door (wired to door ajar) w/bent D-ring deadbolt type latch. Used for extra long suction hose (up to 14').	$1,127
3365-0446	Single hard suction hose storage (without stops) located in the drivers side upper header. This allows for longer suction hose. Includes a lift-up rear access door (wired to door ajar) w/bent D-ring latch.	$1,552

3365-0447	Recessed folding ladder and pike pole storage compartment located officer side just below "T" of the tank. Compartment sized to store a 10' ladder with feet and (2) pike poles. To have a hinged smoothplate door with a thumb latch hinged to open downward tied to door ajar and park brake per NFPA.	$918
3365-0450	Triple hard suction storage rack. Officer side in ladder track. Includes NFPA restraining straps. Rack shall accommodate 3" hard suction hose.	$1,062
3365-0451	(2) 10' pike pole storage tubes. Locate driver side in adjustable tracks with pike pole hooks stored in the up position. Outboard tube to be fitted for a NY hook.	$460
3365-0454	Stokes/backboard storage with stops located in the officers side upper header. Includes a lift-up rear access door (wired to door ajar) w/bent D-ring latch.	$1,750
3365-0455	Dual hard suction hose storage (without stops) located in the officer side upper header. This allows for longer suction hoses (maximum lenght of 12'). Includes a lift-up rear access door (wired to door ajar) w/bent D-ring latch.	$1,924
3365-0457	Four (4) pike poles and a folding ladder tucked behind ground ladders on the adjustable ladder tracks.	$2,771
3365-0459	Box storage rack. Locate in [#LOC]. (2) wide/(2) high. Each compartment to be 8" wide x 10" high. Box to be angled upward in the compartment. No ribbed rubber.	$356
3365-0460	Box storage rack. Locate in [#LOC]. (1) wide/(2) high. Each compartment to be 12" wide x 10" high. Box to be angled upward in the compartment. No ribbed rubber.	$307
3365-0461	Ladder storage box. Located in the officer side hose bed. Includes vertically hinged door (wired to door ajar) w/push-button latch(es), hose bed style above the ladder storage and nylatron flooring (no partition). Box to hold (1) 24' 2-Section, (1) 14' roof, (1) 10' attic and (2) pike poles.	$2,720
3365-0465	Officer side vertical storage tunnels. For use with low hose bed. Lower Tunnel to hold: 2-section 24`, 14` roof, 10` attic and (3) pike poles, (1) standard, (2) with multipurpose hooks (recessed 5" fwd of door). The upper tunnel to have enclosed storage for (1) 10` X 6" hard suction hose with (1) pike pole with multipurpose hook (recessed 5" fwd of door). The area below the hard suction storage for a removable hose tray (not included) for customers "high raise packs" with a stop set at 72" from access opening. Includes vertically hinged rear .188" smooth plate doors with D-ring latch on each door accessible at the rear of body.	$3,248
3365-0467	Hard suction storage in hosebed for the following: (3) 6" x 10' hard suction hoses. Includes (2) hosebed divider with squared off upper rear, vertically hinged (to swing outboard hosebed area) door with latch (wired to door ajar indicator) and composite material overlay on hosebed flooring. Upper area open and main hosebed cover to be used to cover top area of storage area. Storage located in the center of the hosebed.	$1,681
3365-0468	Internal ladder tunnel storage with vertically hinged smooth plate door (wired to door ajar). Access door to be located to the rear of the officer's side body. Storage tunnel capable of holding: (2) 12' Roof, (1) 10' Attic, (1) 6' roof hook pole, (1) 8' pike pole and (1) 10' pike pole.	$2,837
3365-0469	Ladder storage through tank for (1) 2-section 24' extension, (1) 14' roof, (1) 10' attic with feet, (2) pike poles and (2) 10' X 6" hard suction hoses. Reduces selected water tank capacity by approximately 450 gallons for pumpers.	$5,730
3365-0470	Hard suction Storage Box located in the officer side roof top compartment. The storage to be boxed off inside roof top compartment. Includes vertical hinged smooth plate door painted job color as applicable (wired to door ajar) w/D-ring latch. Storage to hold (2) 6" X 10' hard suction tubes horizontal side by side..	$2,135
3365-0471	Upper hosebed storage area above ladder or storage tunnel on officer side body. Upper storage area to have an open top and run length of the hosebed area. Includes hosebed style flooring and matching rear vinyl or cargo net cover of same style/color as main hosebed.	$1,019
3365-0472	Recessed folding ladder and pike pole storage compartment located right rear of body up high. Compartment sized to store a 10' ladder with feet and (3) up to 12' in length pike poles.	$1,401
3365-0473	Upper hosebed storage area above driver side compartments. Upper storage area to have an open top and run length of the available hosebed area as optioned. Includes hosebed style flooring.	$1,020
3365-0474	Officer side vertical storage tunnel. For use with low hosebed, fully enclosed and extended to pump area with drain holes forward in tunnel flooring. Tunnel to hold: 2-Section 24', 14' roof, 10' attic and (2) D-Handle pike poles. Includes vertically hinged rear smooth plate door(s) with push-button latch. The attic ladder to be stored below the 2-section and roof ladders. The D-Handle pike poles to be located on the hose bed wall outboard of ground ladders. Ladder tunnel will not extend to top of the body, the area above the ladder tunnel to have hosebed style flooring.	$3,520
3365-0475	Hard suction storage box, vertical, over/under. Located in the officer's side hose bed. Includes a swing open door, vertical hinged on left side (wired to door ajar) w/trigger latch, hose bed style top and flooring. Box to hold (2) 6" x 10' long tubes.	$1,663
3365-0476	Ladder Storage Box. Located in the officer side hosebed. The top shall be enclosed using hosebed style top. Includes vert hinged door (wired to door ajar) w/ thumb latch(s). Box to hold (1) one 24' 2-section, (1) one 14' roof, (1) one 10' folding attic ladder, (4) four pike poles, and (2) two 6" x 10' hard suction hose above ladders.	$3,186
3365-0477	Hard suction storage box, vertical, over/under. Located in the driver's side hose bed. Includes a swing open door, vertical hinged on right side (wired to door ajar) w/trigger latch, hose bed style top and flooring. Box to hold (2) 6" x 10' long tubes (not included).	$1,663
3365-0478	Hard suction storage box with strainer storing capacity. Located in the driver side hose bed. Includes a swing open diamond plate door, vertically hinged on the right hand side (inboard) and wired to door ajar w/thumb latch(es), diamond plate top and nylatron flooring (no divider). Box to hold [#LOC] tubes with strainer.	$1,663
3365-0479	Hardsuction Storage in hosebed for the following: (2) 6" x 10' Hoses. Includes (1) hosebed divider with squared off upper rear, vertically hinged (to swing into hosebed area) door with latch (wired to door ajar indicator) and composite material overlay on hosebed flooring. Upper area open and main hosebed cover to be used to cover top area of hardsuction storage area. Storage located to officer of hosebed.	$1,163

3365-0480	Hard suction storage in hosebed for the following: (2) 6" x 10' hard suction hoses. Includes (1) hosebed divider with squared off upper rear, vertically hinged (to swing outboard hosebed area) door with latch (wired to door ajar indicator) and composite material overlay on hosebed flooring. Upper area open and main hosebed cover to be used to cover top area of storage area. Storage located to officer side of hosebed.	$1,163
3365-0481	Zico hydraulic drop down portable tank rack. Rack located to officer of body. Rack sized to be a portable tank 169" long. The control switching to be located officer side rear compartment face with the rack being in full view of the operator during operations.	$6,175
3365-0482	The driver side Storage Box to store (2) backboards. Each to be accessed by a vertically hinged diamond plate door with a push-button latch. Door to wired to the door ajar indicator in the cab.	$534
3365-0483	Officer side vertical storage tunnel. For use with low hosebed. Tunnel to hold: 2-Section 24', 14' roof, 10' folding attic, (2) pike poles, and (1) backboard. Includes vertically hinged rear smooth plate door (to accommodate graphics/striping) with push-button latch. Upper storage area to have an open top and run full length of the body. Upper area to have hosebed style flooring.	$3,209
3365-0487	A bolt on aluminum fabricated sign plate mounted to the exterior vertical surface of the hydraulic ladder lift structure. This shall provide a mounting surface for lights along with an area for graphics. Sign plate shall be painted job color to match the ladder lift.	$794
3365-0489	Trash Hook storage compartment located driver side just below hosebed. Compartment sized to store a 10' Trash Hook with D-Handle with smooth plate vertically hinged door and D-Ring latch.	$699
3365-0492	Storage box on officer side compartment top with 2 half length side hinged down access doors with 2 butterfly latches per door (wired to door ajar). Box to be approximately 149" long x 12" high x 12" deep without center divider. Storage is for 2.5" DJ hose with nozzle for hi-rise pack remaining extra space for tool storage. With black dri-deck flooring.	$1,415
3365-0493	(2) 10' pike pole storage tubes. Locate inboard bottom side of ladder rack on old style adjustable track with pike pole hooks stored in the down position.	$627
3365-0495	Storage tunnel capable of holding: (1) Husky brand steel frame 2100 gallon folding tank. Tunnel to be 35" tall by standard width and full length of the available body. Forward end of tunnel to be capped with a removable plate to seal tunnel from debris and a 10.5" wide (minimum or as applicable to tank model) U channel top and bottom centered in tunnel with Nylon pads to be supplied on the bottom. Door to be plate aluminum matching ladder tunnel with push button latch tied to door ajar. Tank storage to be Driver Side Storage Tunnel.	$1,644
3365-0498	Ladder Tunnel to be completely enclosed to prevent road grime, water or snow from entering into the storage tunnel.	$481
3365-0501	Dual hard suction hose storage with stops located in the officer side upper header. Designed to hold (1) 11' and (1) 7' hoses (not included).	$1,888
3365-0502	Four (4) pike poles and a folding ladder located under stokes basket module on floor of upper left side body compartment.	$1,172
3365-0503	Recessed pike pole storage compartment located [#LOC]. Compartment sized to store (2) pike poles.	$473
3365-0504	Three (3) pike poles and a folding ladder tucked behind ground ladders on the adjustable ladder tracks.	$2,771
3365-0505	Hard Suction Storage Box. Located horizontal in the drivers side hosebed. Includes vertical hinged door (wired to door ajar) with D-Ring style latches and nylatron flooring. Box to hold two (2) 6" X 10' hard suction hose.	$1,663
3365-0506	Hard suction storage box. Located in the officer side hose bed. Includes a swing open door, vertical hinged on the right hand side (outboard) and wired to door ajar w/push-button latch(es), hose bed style top and nylatron flooring (no divider). Box to hold two (2) tubes.	$1,663
3365-0508	Ladder storage thru tank for (1) 2-section 24' extension, (1) 14' roof, (1) 10' attic with feet,(2) 10' pike poles and (1) Combo step-extension (Duo Safety 300-A) ladder. Ladders shall be stored horizontally. Ladder storage is approximately 270 gallons.	$3,471
3365-0510	(2) aluminum pike pole storage tubes. (2) 48" pike pole tubes to be Located just below, rearward, and across lower B1 compartment top and to extend into L4 and R3 compartments for dealer supplied and installed trash hooks. Dealer is to supply and install required retaining devise for hooks.	$336
3365-0512	Hard suction storage box. Located in the driver side hose bed. Includes a swing open diamond plate door, vertical hinged on the right hand side (inboard) and wired to door ajar w/push button latch(es), and nylatron flooring. Box to hold one (1) 6" X 10' tube.	$1,180
3365-0513	Hard suction storage box. Located in the officer side hose bed. Includes a swing open diamond plate door, vertical hinged on the left hand side (inboard) and wired to door ajar w/push button latch(es), and nylatron flooring. Box to hold one (1) 6" X 10' tube.	$1,180
3365-0514	Fire extinguisher storage rack to hold (3) extinguishers in a single horz row. Each storage area to be 11" wide x 11" high x 25" deep with a trough in the bottom (same as used in E-ONE wheelwell bottle storage. Bottom and sides of the trough to include ribbed rubber inserts. Each opening to have a vertically mounted strap. Bolt to the bottom of the adjustable shelf in R1 forward end.	$696
3365-0515	Full width horizontal storage tunnel between top of tank and below hose bed floor. Tunnel to hold: (3) 10' lengths of 6" hard suction hose, side by side on the right side. Includes horizontally hinged drop down rear smooth plate door with bent D-ring latch, and bolt-on SS partition protection for water tank fill tower(s).	$2,942
3365-0517	Recessed pike pole storage compartment located on the officer side between the upper and lower compartments. Compartment sized to store (1) 6' NY Roof Hook and (1) 6' Drywall Hook. The box to be 5" deep.	$473
3365-0519	Upper hosebed storage area above driver side compartments. Upper storage area to have an open top and run length of the available hosebed area as optioned. Includes slotted flooring for storage of 17' Little Giant Ladder with divider set 8.5", leaving 4.25" outboard for customer supplied and installed backboards. Dealer to supply stops for backboards.	$1,410
3365-0520	Storage tunnel capable of holding: (2) 6" x 10' hard suction hoses (individually vertically stacked) in Drivers Side Storage Tunnel. Includes vertically hinged rear smooth plate door with push-button latch. Tanker Only.	$986

3365-0521	Officer side ladder storage tunnel. Includes area for a vertically stored 35' 3-section', 16' roof and 10' folding ladders plus storage for two (2) standard pike poles.	$1,709
3365-0522	Ladder storage box in driver side of hosebed. Dimensions to be 25" wide x 9" high x length of hosebed. Includes ladder stop 66" back from opening and diamond plate drop down door 8" high (1" open space between top of door and top of box) with a D-ring latch (wired to door ajar indicator) and composite material overlay on hosebed flooring.	$1,308
3365-0523	Recessed folding ladder and pike pole storage compartment located right rear of body up high. Compartment sized to store a 10' ladder with feet, (3) 10' pike poles, and (1) 8' "D" handle trash hook.	$2,006
3370-0023	Tracks for adjustable shelf and/or adjustable tray in single depth or rescue style single depth compartment. Location: [#LOC].	$196
3370-0025	Permanent shelf. Locate in [#LOC].	$102
3370-0026	Adjustable shelf. For compartments that are full height/full depth or lower compartments with full depth. Location: [#LOC].	$253
3370-0027	Tracks for adjustable shelf and/or adjustable tray in the lower area of the compartment. Location: [#LOC].	$100
3370-0028	Tracks for adjustable shelf and/or adjustable tray in the upper area of the compartment. Location: [#LOC].	$54
3370-0029	Adjustable shelf. For compartments with upper shallow depth. Location: [#LOC].	$129
3370-0046	Adjustable shelf. Shelf to be notched into extended side compartment area. For compartments with upper shallow depth. Location: R3 upper.	$485
3370-0048	Adjustable shelf with 2" lips around entire shelf. For compartments that are full height/full depth or lower compartments with full depth. Location: [#LOC].	$543
3370-0050	Tracks for adjustable shelf and/or adjustable tray in transverse compartment. Location: B1.	$387
3370-0052	Adjustable shelf (J-Style) for non-transverse compartments 16" or greater in depth. Location: [#LOC].	$253
3370-0053	Adjustable shelf (C-Style) for non-transverse compartments up to 15.99" in depth. Location: [#LOC].	$129
3370-0054	Tracks for adjustable shelf and/or adjustable tray in compartments 16" or greater in depth. Location: [#LOC].	$196
3370-0055	Tracks for adjustable shelf in shallow compartments up to 15.99" deep. Location: [#LOC].	$100
3370-0056	Tracks for adjustable shelf and/or adjustable tray in compartments 16" or greater in depth. Tracks to run from floor to just below compartment offset/ceiling. Location: [#LOC].	$196
3370-0057	Tracks for adjustable shelf in shallow compartments up to 15.99" deep. Tracks to run from floor/compartment offset tube to just below compartment ceiling. Location: [#LOC].	$100
3370-0065	Tracks for adjustable shelf and/or adjustable tray in single depth or rescue style single depth compartment. Position tracks within compartment for optimal adjustability. Track height from floor and/or ceiling may be impacted by other items located within the compartment or by general body construction. Location: [#LOC].	$196
3370-0119	Fixed shelf with 1/2" front lip. For non-transverse compartments that are 16" or greater in depth. Location: B1 mounted 9" below roll-up door drum, angles to be only as large as needed.	$253
3370-0127	Permanent shelf. Locate in R1 just above the Zico bottle racks. Front lip of shelf to be bent down.	$174
3370-0128	Permanent shelf. Locate in B1 just above the booster reel. Front lip of shelf to be bent down.	$174
3370-0132	Bolt in shelf. Locate in roof top compartment driver's side, just above the air bottle, forward roof top compartment.	$174
3370-0133	Tracks shall be provided for use with adjustable shelves and/or trays. The tracks shall align for use of a shallow depth adjustable shelf(s) and/or adjustable tray(s). The tracks shall be ran from floor to ceiling to allow the shallow depth adjustable shelf/tray to have full compartment height adjustability. Position tracks within compartment for optimal adjustability. The tracks as installed from floor to ceiling may be impacted by other items located within the compartment; tracks may be cut and continued again as required to provide full height adjustability. The tracks shall be vertically mounted and attached to the side and/or rear walls of the compartments. Location: [#LOC].	$196
3370-0134	Fixed shelf modification for shelf to have 1" lips. Location: [#LOC].	$115
3370-0138	Permanent shelf. Locate in L1 just above the CAFS foam system components. Front lip of shelf to be bent down.	$174
3370-0140	The R2 Compartment shall include Unistrut. (1) Piece each side centered and (4) on back wall evenly spaced.	$359
3370-0142	Permanent shelf for Hurst power unit. Locate on forward bulkhead high as possible [#LOC].	$702
3370-0144	Permanent shelf, bolt in, suspended from ceiling and forward in compartment. Locate in [#LOC].	$309
3370-0146	The interior shall include adjustable track extrusion horizontally on interior side walls, from the front wall of the body to the forward walls of the L2/R2 compartments. Locate (1) at 24" above the floor and the (1) at 42" above the floor.	$359
3370-0149	Adjustable shelf. For non-transverse compartments that are 16" or greater in depth. The shelf shall have a minimum 2" front, rear and side lips. Location: [#LOC].	$279
3370-0154	Adjustable shelf with 2" lips around entire shelf. For compartments that are shallow up to 15.99" depth. Location: [#LOC].	$239
3370-0158	Tracks on rear wall of compartment for equipment mounting. Three (3) aluminum adjustable shelf tracks shall be vertical mounted on the rear wall of the L2 compartment over rear wheel. Tracks shall be located forward and rearward offset from compartment walls 4 inches in the compartment and one centered in the compartment. Tracks shall be for mounting customer equipement and shall not have any shelves included.	$163
3370-0161	Stainless steel adjustable shelf. For non-transverse compartments that are 16" or greater in depth. Location: [#LOC].	$303
3370-0162	Stainless steel adjustable shelf. For non-transverse compartments that are up to 15.99" deep. Location: [#LOC].	$155
3370-0167	Mount two (2) pieces of shelf track horizontal from front to back on the back wall for attaching air bottle brackts to. Use old style adjustable track part # 273490. Locate [#LOC].	$229

3370-0168	Fixed shelf with 1" front lip. For non-transverse compartments that are 16" or greater in depth. Location: B1 mounted 28" above floor full width of compartment for booster reel.	$387
3370-0169	Permanent shelf. Locate in R8, 36" from the floor to the bottom of the shelf.	$102
3370-0171	Compartment R2 to have an "L" shaped shelf bolted to the ceiling and front wall to support the (8) air bottle storage.	$328
3370-0172	Adjustable shelf (J-Style) for non-transverse compartments 16 in. or greater in depth. Shelf to be partial depth and extend from back wall 18in. or as applicable per compartment depth, options. Design to offset attach to standard location adjustable tracks and relief notch as needed to adjust at breaker box or similar compartment mounted options.. Location: [#LOC].	$253
3370-0175	Fixed corner shelves with 1" front and side lip. For non-transverse compartments that are 16" or greater in depth. Location: L3 mounted (1) each side above floor tray for (1) gal fuel cans.	$281
3370-0177	Fixed hanging shelf without front lip. For non-transverse compartments that are 16" or greater in depth. 30" wide x 5" high x 24" deep. Includes nylon buckle strap assembly vertically across the center of the opening. Location: R3 mounted rearward at the ceiling of the full depth compartment area.	$253
3370-0178	Permanent shelf. Locate in L3, approximately 1/2 depth of compartment, even with bottom of lower 3x3 extrusion at turntable access panel on back wall.	$92
3370-0179	All adjustable and fixed shelves to be extended outboard towards door opening and inboard towards back wall as far as possible. Note outboard corners may require notching for compartment track lighting (if applicable).	$398
3370-0181	Fixed shelf with 1" front lip. For non-transverse compartments that are 16" or greater in depth. Location: L2 mounted above air bag module full width of compartment.	$253
3370-0182	Permanent shelf, bolt in and full transverse mounted, located above the upper transverse Speedlay assembly as low as the speedlay plumbing and tray will allow.	$309
3380-0014	Roll-out generator tray. Includes tray interlock. Locate [#LOC].	$821
3380-0015	Fixed back wall mounted toolboard. Toolboard to be spaced off wall a half inch. Location(s): [#LOC].	$228
3380-0017	Floor mounted slide master roll-out/tilt down tray. Single depth. Mount on [#LOC] floor.	$1,156
3380-0018	Adjustable roll-out toolboard. Includes upper and lower adjustable track with 250 lbs. slides and gas shock actuated. Toolboard sized to compartment height and depth as applicable. Location(s): [#LOC].	$849
3380-0019	Running board suction tray. Includes removable slats in bottom of tray. Location(s): [#LOC]	$540
3380-0021	Hard suction hose storage tray. Locate on inboard side of overhead ladder rack. Includes (2) securing straps.	$432
3380-0022	Floor mounted roll-out tray. Includes 500lbs. tray capacity. Location: [#LOC].	$900
3380-0023	Adjustable mounted roll-out/tilt-down tray. Location(s): [#LOC]. For use in single depth or rescue style compartments.	$1,461
3380-0024	Adjustable mounted roll-out tray. Includes 250 lbs tray capacity. Location(s): [#LOC]	$991
3380-0025	Adjustable mounted roll-out tray. Includes 500 lbs tray capacity. Location(s): [#LOC]	$1,203
3380-0027	Floor mounted SlideMaster with tray. Model SM3-SP. Single depth. Mount on [#LOC] floor.	$926
3380-0028	Adjustable mounted Slide Master with tray. Model SM3-SP. Single depth. Location(s): [#LOC]	$1,227
3380-0029	Floor mounted Bi-Directional Slide Master with tray. Model SM2-D-SP. Mounted on [#LOC].	$1,595
3380-0030	Adjustable mounted bi-directional Slide Master with tray. Model SM2-D-SP. Mounted in transverse area of [#LOC].	$1,895
3380-0033	Hard suction hose storage tray. Locate on top of Zico drop-down ladder rack.	$863
3380-0036	Fixed back wall mounted peg toolboard. Toolboard to be spaced off wall a half inch. Location(s): [#LOC].	$273
3380-0038	Floor mounted roll-out tray with Jonathan Slides. Includes 400lbs. tray capacity. Mount on [#LOC] floor.	$1,573
3380-0039	Adjustable mounted roll-out tray with Jonathan Slides. Includes 400 lbs tray capacity. Location(s): [#LOC]	$1,875
3380-0040	Vertical hinged swing-out tool board. Location: [#LOC]. Hinge along forward compartment wall and position centered between door and back wall. Includes butterfly latch to secure in the closed position that is accessible from the ground.	$1,596
3380-0041	PAC TRAC panels vertical stacked on back wall of compartment. Locate: [#LOC].	$824
3380-0049	Running board suction tray (floating style). Includes tapered 3" front corner and removable slats in bottom of tray. Location(s): [#LOC].	$701
3380-0055	Floor mounted roll-out/tilt down tray with aluminum frame. Mount on [#LOC] floor.	$1,126
3380-0056	Adjustable mounted roll-out/tilt down tray with aluminum frame. Location(s): [#LOC]. For use in single depth or rescue style compartments.	$1,426
3380-0059	Running board suction tray. Outboard (front) wall of tray and rubrail hinged at the bottom with quick release latches for drop down door. Includes tapered 3" front corner and removable slats in bottom of tray. Location(s): [#LOC]	$873
3380-0060	Adjustable tool board with 500 lbs slides. Includes upper and lower adjustable track and gas shock actuated. Tool board sized to compartment height and depth as applicable. Location(s): [#LOC].	$1,167
3380-0061	Compartment underbody. Includes drop down front door with D-ring latches. Locate [#LOC].	$1,578
3380-0062	Adjustable peg tool board. Includes upper and lower adjustable track and gas shock actuated. Tool board sized to compartment height and depth as applicable. Location(s): [#LOC].	$1,020
3380-0063	Ready Respond Storage cabinet. Includes (5) drawers with gray fronts. No side trim required. Locate floor mounted in [#LOC].	$4,180
3380-0064	Floor mounted roll-out tray. Includes 250lbs. tray capacity. Mount on B1 floor. Front and rear lips of tray to be 9.5".	$1,927
3380-0065	Vertical hinged swing-out toolboard. Location: [#LOC]. Hinge along forward compartment wall and position centered between door and back wall. Includes D-Ring latch to secure in the closed position that is accessable from the ground.	$1,596
3380-0067	Poly box(s) to be located [#LOC]. Box(s) depth (front to rear) to be sized for placement on floor/shelf or tray as applicable to compartment options. Box sized [#COL]	$338

3380-0068	Floor mounted equally sized roll-out trays (PR). Includes 250lbs. tray capacity. Mount on [#LOC] floor.	$1,375
3380-0072	Running board suction tray. Includes removable slats in bottom of tray. Tray to be as long as possible. Location(s): [#LOC].	$1,079
3380-0073	Slidemaster frame powder coated silver. Location(s): [#LOC]	$117
3380-0074	Tool board HD adjustable. Includes upper and lower adjustable track and is gas shock actuated, return style re-enforcing bends on vertical front and rear edges of tool board, upper and lower adjustable track and gas shock actuated. Tool board sized to compartment height and depth as applicable. Location(s): [#LOC]	$907
3380-0075	Running board suction tray (floating style). Includes tapered 3" front corner and removable slats in bottom of tray. Tray to be as long as possible. Location(s): [#LOC].	$1,052
3380-0076	Tray, floor mounted roll-out with gas spring. 500 lbs. capacity. Location: [#LOC].	$690
3380-0077	Tray, adjustable roll-out with 500 lbs. capacity and a gas shock. Location(s): [#LOC].	$991
3380-0078	Compartment underbody with slide-out tray. Includes drop-down front door with push-button latch(es). [#LOC].	$1,953
3380-0079	Adjustable heavy duty tool board with 500 lbs. capacity. Includes return style reinforcing bends on vertical front and rear edges of tool board, upper and lower adjustable track and gas shock actuated. Tool board sized to compartment height and depth as applicable. Location(s): [#LOC].	$907
3380-0080	Adjustable heavy duty peg tool board. Includes return style re-enforcing bends on vertical front and rear edges of tool board, upper and lower adjustable track and gas shock actuated. Tool board sized to compartment height and depth as applicable. Location(s): [#LOC]	$1,078
3380-0081	Roll-out generator tray. Includes tray interlock. Locate [#LOC].	$821
3380-0082	Slidemaster frame powder coated black (EA). Location: [#LOC].	$158
3380-0086	Vertical hinged swing-out pegboard toolboard. Location: [#LOC]. Hinge along forward compartment wall and position centered front to rear. Includes D-ring latch to secure in the closed position that is accessible from the ground.	$1,692
3380-0087	Adjustable toolboard with 500 lb. slides for use with deep compartments. Includes upper and lower adjustable track with lock in/lock out latch. Toolboard sized to compartment height and depth as applicable. Location(s): [#LOC].	$1,167
3380-0093	Floor mounted roll-out/tilt down tray. Mount on [#LOC] floor. For use on half transverse trays.	$1,156
3380-0094	Floor mounted roll-out/tilt down tray. Mount on [#LOC] floor. For use on two thirds transverse trays or in the B1above the frame rails.	$1,156
3380-0095	Adjustable mounted roll-out/tilt down tray. Location(s): [#LOC]. For use on 1/2 depth transverse trays or upper deep B1 compartment.	$1,461
3380-0096	Adjustable mounted roll-out/tilt down tray. Location(s): [#LOC]. For use on 2/3 deep transverse trays or B1above the frame rails.	$1,461
3380-0099	Vertical hinged swing-out toolboard. Location: [#LOC]. Hinge along rearward compartment wall and position centered between door and back wall. Includes D-Ring latch to secure in the closed position that is accessable from the ground and a positive hold open device in the open position.	$1,596
3380-0103	Running board suction tray (floating style). Includes tapered 3" front corner and Turtle Tile brand [#COL] floor matting in bottom of tray. Location(s): [#LOC]	$701
3380-0125	Running board suction tray. Outboard (front) wall of tray and rubrail hinged at the bottom with quick release latches for drop down door. Includes removable slats in bottom of tray. Location(s): [#LOC]	$873
3380-0129	Left side running board SS hose tray with Duradek flooring.	$560
3380-0130	Right side running board SS hose tray with Duradek flooring.	$560
3380-0133	On Scene Solutions floor mounted roll-out/tilt down tray mount on [#LOC] floor. This tray shall not exceed 30" in depth.	$1,568
3380-0134	On Scene Solutions adjustable mounted roll-out/tilt down tray mount in the [#LOC] compartment. This tray shall not exceed 30" in depth.	$1,863
3380-0139	Vertical hinged swing-out toolboard. Location: R2. Hinge along forward compartment wall and position centered between door and back wall. The hinge to be full height of toolboard (as applicable). Includes D-Ring latch to secure in the closed position that is accessable from the ground.	$1,675
3380-0140	Generator roll-out tray. Includes tray interlock. For use with Harrison compartment mounted generator. Locate in compartment [#LOC].	$556
3380-0142	PAC TRAC panels vertical stacked on compartment walls (includes installation on vertical hinged compt door, if applicable). Locate: [#LOC].	$2,661
3380-0143	Compartment underbody with slide-out tray. Includes front door with D-ring latch(es). Door will be attached to the tray. Locate [#LOC].	$2,254
3380-0146	Vertical hinged swing-out toolboard. Location: [#LOC]. Hinge along rearward compartment wall and position centered between door and back wall. Includes latch to secure in the closed position that is accessible from the ground.	$1,596
3380-0147	Poly toolboards to be half inch thick. Toolboards to be spaced off wall a half inch. Location(s): B1 side and back walls. Includes cut-out for compartment light(s). Toolboards to be approx (2) 30" high x 24" wide and (1) 30" high x 43" wide.	$950
3380-0148	Poly toolboards to be half inch thick. Toolboards to be spaced off wall a half inch. Location(s): L1 back wall, notch around generator gauge panel. Toolboard to be approx 37" high x 32" wide.	$318
3380-0149	Respond Ready toolbox located in the L1 compartment. Toolbox includes (4) drawers with 500 lb. lock-out slides and (4) dividers per drawer. Drawer heights to be (1) 3", (1) 4", (1) 8" and (1) 10" drawer. Includes standard top shelf, gray power coated front panels and galvanized components. Dimensions of overall toolbox 26" W x 27.5" H x 22.7" D.	$3,040
3380-0150	Fixed back wall mounted toolboard with swirled finish. Toolboard to be spaced off wall a half inch. Location(s): [#LOC].	$374
3380-0152	Vertical hinged swing-out toolboard, adjustable in and out. Location: L2. Hinge along rearward compartment wall and position centered between door and back wall. Includes latch to secure in the closed position that is accessible from the ground.	$1,596
3380-0153	Fixed back wall mounted toolboards, compartment above rear wheels on the left and right side. Toolboards to be spaced off back walls. Wildland	$554

3380-0154	Brass tray, egg crate dividers, 500 lb., Wildland	$1,153
3380-0155	Running board suction tray. Includes Turtle Tile brand black floor matting in bottom of tray. Location(s): [#LOC].	$540
3380-0158	Floor mounted roll-out tray. Includes OnScene Solutions slide 81900 series. 500 lbs. tray capacity. Location: [#LOC].	$2,035
3380-0159	Adjustable tool board with 500 lbs slides. Includes upper and lower adjustable track, .75" x .75" aluminum angle welded to front edge and gas shock actuated. Tool board sized to compartment height and depth as applicable. Location(s): [#LOC].	$907
3380-0162	Vertical hinged swing-out pegboard toolboard. Location: [#LOC]. Hinge along rearward compartment wall and position centered front to rear. Includes latch to secure in the closed position and gas shock to secure in the open position that is accessible from the ground.	$1,730
3380-0167	Vertical hinged heavy duty swing-out toolboard. Location: [#LOC]. Hinge along forward compartment wall and position centered between door and back wall. Includes D-Ring latch to secure in the closed position that is accessible from the ground. Hinge made from 1/2" stainless steel rod and stainless steel plate with flanged bearing top and bottom.	$1,675
3380-0168	Floor mounted roll-out tray with 500 lbs. capacity. Locate in R1 offset forward. Tray to be half the width of compartment.	$690
3380-0169	Adjustable roll-out tray with 500 lbs. capacity. Tray to have 6" lips. Location(s): [#LOC].	$1,276
3380-0173	Vertical hinged heavy duty swing-out pegboard toolboard. Location: [#LOC]. Hinge along forward compartment wall and position centered between door and back wall. Includes D-Ring latch to secure in the closed position that is accessable from the ground. Hinge made from 1/2" stainless steel rod and stainless steel plate with flanged bearing top and bottom.	$1,771
3380-0175	Floating style left side running board SS hose tray with Duradek flooring.	$669
3380-0176	Floating style right side running board SS hose tray with Duradek flooring.	$669
3380-0177	Prepare upper back walls of compartment L3 and L4 with studs for dealer to provide plywood (or whatever material) toolboard panels. Studs are to be threaded stainless steel.	$303
3380-0179	Vertical hinged heavy duty swing-out aluminum tool board(s) shall be provided for compartment(s) [#LOC]. The tool board shall be constructed of 1/4" (.25") smooth aluminum plate, peg board style, and be sized in height and length as applicable. The tool board shall be position centered between door and back wall and hinged along rearward wall mounted. The hinge shall be made from 1/2" stainless steel rod and stainless steel plate with flanged bearing top and bottom that will permit the board to swing out of the compartment for easier access to tools and/or equipment. The tool board shall latch to a 3" x 3" extrusion, with a Tri-Mark latch to secure the toolboard in the closed position.	$2,163
3380-0180	(2) Hand hold slotted cut-outs shall be provided on rollout tray's front wall (one each side), for easier roll-out/roll-in. Rubber trim shall line the hand cut outs. Approximate size of cut-out to be 1-1/2" x 5". Locate on each tray in [#LOC].	$40
3380-0181	Vertical hinged swing-out toolboard. Located in [#LOC] 12" from door. Hinge along rearward compartment wall and position centered between door and back wall. Includes D-Ring latch to secure in the closed position that is accessable from the ground and a positive hold open device in the open position.	$1,596
3380-0189	Running board suction tray with a diamond plate door hinged on the inboard side with quick release flush latch(s) and a lanyard type holding device. Includes removable slats in bottom of tray. Location(s): [#LOC].	$1,146
3380-0190	Vertical hinged swing-out tool board. Location: [#LOC]. Hinge along forward compartment wall and position halfway in from door opening. Includes single point D-ring latch to secure in the closed position that is accessible from the ground.	$1,596
3380-0191	Vertical hinged heavy duty swing-out toolboard. Location: [#LOC]. Hinge along rearward compartment wall and position centered between door and back wall. Includes D-Ring latch to secure in the closed position that is accessible from the ground. Hinge made from 1/2" stainless steel rod and stainless steel plate with flanged bearing top and bottom.	$1,675
3380-0194	PAC TRAC panels vertical stacked on each side of Swing-out Toolboard. Locate:[#LOC].	$1,647
3380-0195	Poly boxes (4) to be located [#LOC]. Box depth (front to rear) to be sized for placement on floor/shelf or tray as applicable to compartment options. All (4) boxes shall be 10" in height and equal width to fill the placement area designated.	$1,349
3380-0196	Vertical hinged heavy duty swing-out pegboard toolboard. Location: [#LOC]. Hinge along rearward compartment wall and includes D-Ring latch to secure in the closed position that is accessible from the ground. Hinge made from 1/2" stainless steel rod and stainless steel plate with flanged bearing top and bottom.	$1,755
3380-0197	Floor mounted roll-out/tilt down tray with aluminum frame. Mount on [#LOC] floor. Tray(s) to have 2" high sides all around IPO standard.	$1,126
3380-0198	Adjustable mounted roll-out/tilt down tray with aluminum frame. Location(s): [#LOC]. Tray(s) to have 2" high sides all around IPO standard. For use in single depth or rescue style compartments.	$1,426
3380-0199	Floor mounted bi-directional Slide Master with tray. Model SM2-D-SP. Includes fixed toolboard centered in tray lengthwise extending up as high as possible. Toolboard to be fabricated from 1.5" square aluminum tubing for frame and centered inside of frame shall be .250" smooth plate with bracing on each end for rigidity when tools are mounted. Tray/toolboard mounted on L1/R1 transverse floor.	$2,469
3380-0200	Running board suction tray (floating style). Includes tapered 3" front corner and removable slats in bottom of tray. Location(s): [#LOC]. Trays to be smooth plate painted black durabak.	$889
3380-0201	PAC TRAC panels vertical stacked on each side of swing-out tool board. Locate: [#LOC].	$1,647
3380-0203	Adjustable peg tool board. Includes upper and lower adjustable track and gas shock actuated. Tool board sized to compartment height and depth as applicable. Location(s): [#LOC].	$985
3380-0204	Floor mounted Slide Master with tray. Model SM3-LP (low profile). Single depth. Mount on [#LOC] floor.	$988
3380-0206	Adjustable peg tool board. Includes upper and lower adjustable track with lock in/lock out latch. Slides for use with deep compartments. Toolboard sized to compartment height and depth as applicable. Location(s): [#LOC].	$1,241

3380-0211	Officer side running board suction tray shall have 1/2" drain holes IPOS.	$28
3380-0212	Floor mounted rollout tray/toolboard, with gas spring and 500 lbs. capacity. The vertical peg board tool board will be mounted on adjustable mount(s) on the floor of the roll out tray. Includes return style reinforcing bends on vertical front and rear edges of tool board. Tool board sized to compartment height and depth as applicable. Location: [#LOC].	$1,476
3380-0220	Floor mounted roll-out/tilt down and adjustable mounted roll-out/tilt down trays with aluminum frame. Trays to have 2" high sides all around IPO standard. Mount in [#LOC] compartment.	$2,551
3380-0222	Floor mounted roll-out inverted tray with 500 lbs. capacity. Location: [#LOC].	$690
3380-0224	Floor mounted roll-out tray, with gas spring. 500 lbs. capacity. Tray shall be made of 1/4" smooth aluminum. Location: [#LOC].	$914
3380-0226	Poly toolboards to be half inch thick. Toolboards to be spaced off wall a half inch. Location(s): B1 side and back walls. Includes cut-out for compartment light(s). Toolboards to be approx (2) 30" high x 24" wide and (1) 30" high x 36" wide.	$950
3380-0228	Vertical hinged swing-out Pegboard tool board. Location: L2. Hinge along rearward compartment wall and position halfway in from door opening. Includes single point D-ring latch to secure in the closed position that is accessible from the ground.	$1,729
3380-0229	Adjustable toolboard partition. With unistrut track mounted to inside of rollout tray on floor for toolboard to adjust side to side. Toolboard to be fabricated from 1.5" square aluminum tubing for frame and centered inside of frame shall be .250" smooth plate with bracing on each end for rigidity when tools are mounted. Locate in [#LOC] floor mounted roll-out tray.	$535
3380-0230	Compartment underbody. Includes drop down front door with push-button latches. Locate: Span below R1 and R2.	$1,477
3380-0233	Adjustable roll-out tray with 500 lbs. capacity. Tray to have raised forward lip with hole(s) to accommodate mounting of captive rollers for optioned reels in compartment. Tray at full extension shall position rollers outward to provide additional protection from hoses chafing or damaging painted surfaces: [#LOC].	$1,347
3380-0236	Vertical hinged heavy duty swing-out toolboard with storage trough(s). Location: [#LOC]. Hinge along forward compartment wall and position centered between door and back wall. Includes D-Ring latch to secure in the closed position that is accessible from the ground. The Toolboard shall include a 5" x 5" Trough, enclosed on each end and running full length along the botom edge of the board, both inside and outside (for as long as available space allows when fully opened), used for small containers storage. Hinge made from 1/2" stainless steel rod and stainless steel plate with flanged bearing top and bottom.	$1,831
3380-0237	Compartment underbody 30" wide. Includes drop down front door with push-button latches. The storage compartment shall hold approximately 50` of 3" DJ hose. Locate [#LOC}.	$1,269
3380-0238	Pac Trac Vertical hinged swing-out toolboard, adjustable in and out. Location: [#LOC]. Hinge along forward compartment wall. Includes latch to secure in the closed position that is accessible from the ground.	$1,648
3380-0239	Adjustable roll-out tray with 500 lbs. capacity and a gas shock. PAC tool panel mounted on floor of tray. Location(s): L1	$1,326
3380-0240	Floor mounted stainless steel roll-out tray. Includes OnScene Solutions slide 81900 series. 500 lbs. tray capacity. Location: [#LOC].	$2,064
3380-0243	Adjustable roll-out tray. Includes 500lbs. tray capacity. Location: L3 compartment. The tray to be maximum of 20" deep x standard compartment width size. Use 20" long slides due to the enhanced extended compartmentation.	$991
3380-0246	Running board suction tray. Includes removable slats in bottom of tray. Tray inside dimensions to be 35" long from front to back x 10" from rub rail inward to pump panel x 9.5" total depth inside. Tray shall be equipped with a removable slat which will reduce the listed depth dimension. The outboard edge of the tray shall have no folded lip and shall bolt through rub rail to allow for max width. Location(s): [#LOC]	$590
3380-0247	Floor mounted roll-out tray, 48" wide sized for portable pump. Includes 500lbs tray capacity. Location: R1 offset forward.	$900
3380-0248	Vertical hinged swing-out tool board, adjustable in and out. Location: [#LOC]. Hinge along forward compartment wall. Includes single point D-ring latch to secure in the closed position that is accessible from the ground.	$1,649
3380-0249	Compartment underbody. Includes drop down front door with push-button latches. To hold approximately 25' of 5" LDH hose in each underbody compartment. Locate below L1/R1.	$1,269
3380-0251	Left side running board SS hose tray with Duradek flooring. Well to store 50' of 4" hose.	$560
3380-0252	Right side running board SS hose tray with Duradek flooring. Well to store 50' of 4" hose.	$560
3380-0253	Adjustable aluminum peg toolboard with SlideMaster SM3-MP 600 lb. slides for use with deep compartments. Includes upper and lower adjustable track with lock in/lock out latch. Toolboard sized to compartment height and depth as applicable. Location(s): R1	$1,326
3380-0254	Floating style right side running board SS hose tray with Duradek flooring. Well to be 34"L x 9"W x 11"D and offset rearward.	$692
3380-0255	Floating style left side running board SS hose tray with Duradek flooring. Well to be 34"L x 9"W x 11"D and offset rearward.	$692
3380-0256	Compartment with provision for 2 SCBA Bottle storage. Includes drop-down door with D-ring latch. Compartment to be located [#LOC].	$650
3380-0261	Roll-out generator tray. Includes tray interlock. Locate R3. 23 x 18 x 3 spaced from forward wall 8 inches.	$821
3380-0262	Vertical hinged heavy duty swing-out toolboard. Location: L2. Hinge along forward compartment wall and position so that face of toolboard will be 6" into compartment from back of closed door. Includes D-Ring latch to secure in the closed position that is accessible from the ground. Hinge made from 1/2	$1,675
3380-0264	PAC TRAC panels vertical stacked on forward and rearward side walls of compartment L2.	$554
3380-0265	Tray, floor mounted roll-out with gas spring. 500 lbs. capacity. The front and rear lips shall be 1.5" high. Location: [#LOC].	$690

3380-0266	Vertical hinged swing-out Pegboard tool board. Location: R2. Hinge along forward compartment wall and position halfway in from door opening. Includes single point D-ring latch to secure in the closed position that is accessible from the ground.	$1,729
3380-0267	Compartment underbody 66" wide with slide-out tray. Includes front door with D-ring latch(es). Door will be attached to the tray. Locate centerd below L1/L2.	$2,254
3380-0268	Tray / toolboard combination, floor mounted roll-out with gas spring. 500 lbs. capacity. The tray portion to be rearward. L1 rearward of CAFS unit.	$1,565
3380-0273	Fixed back wall mounted toolboard. Toolboard to be spaced off wall a half inch. Location(s): L1 lower on forward, rearward and back walls. Note toolboard fixed to back wall will be removable due to jack access.	$228
3380-0274	Vertical hinged heavy duty swing-out toolboard. Location: [#LOC]. Hinge along forward compartment wall and position centered between door and back wall. Includes D-Ring latch to secure in the closed position that is accessible from the ground and a ball type nylon catch with a ball socket rod to hold device in the open position. Hinge made from 1/2" stainless steel rod and stainless steel plate with flanged bearing top and bottom.	$1,713
3380-0275	Vertical hinged heavy duty swing-out toolboard. Location: [#LOC]. Hinge along forward compartment wall and position 8 in. in from door opening between door and back wall. Includes D-Ring latch to secure in the closed position that is accessible from the ground and a ball type nylon catch with a ball socket rod to hold device in the open position. Hinge made from 1/2" stainless steel rod and stainless steel plate with flanged bearing top and bottom.	$1,713
3380-0277	Running board suction tray extra capacity, drivers side. Includes removable slats in bottom of tray. Tray to be as long as possible, and 5" deeper than standard tray depth for extra hose capacity. Location shall be on drivers side pump panel running board. (Note): ground clearance below tray will be reduced to approximately 9" over level ground.	$1,279
3390-0001	Compartment [#LOC] to have the following storage package: (1) vertical partition 20" off forward wall and the following located forward of the partition: (1) floor mntd roll-out tray w/500lb slds and (2) adjustable shelves. Rearward of partition: (2) adjustable heavy duty tool boards.	$3,062
3390-0002	Compartment [#LOC] to have the following storage package: (1) vertical partition centered off forward wall and the following located forward of the partition: (1) floor mntd roll-out tray w/500lb slds and (2) adjustable shelves. Rearward of partition: (2) adjustable heavy duty tool boards.	$3,062
3390-0003	Compartment [#LOC] to have the following storage package: (1) vertical partition 20" off rearward wall and the following located forward of the partition: (1) floor mntd roll-out tray w/500lb slds and (2) adjustable shelves. Rearward of partition: (1) adjustable heavy duty toolboard.	$3,062
3390-0004	Compartment [#LOC] to have the following storage package: (1) vertical partition 20" off forward wall and the following located forward of the partition: (1) floor mntd roll-out tray w/250lb slds, (1) adjustable roll-out tray w/250lb slds and (1) adjustable shelf. Rearward of partition: (3) adjustable tool boards.	$4,593
3390-0005	Compartment [#LOC] to have the following storage package: (1) vertical partition centered off forward wall and the following located forward of the partition: (1) floor mntd roll-out tray w/250lb slds, (1) adjustable roll-out tray w/250lb slds and (1) adjustable shelf. Rearward of partition: (3) adjustable heavy duty tool boards.	$4,593
3390-0006	Compartment [#LOC] to have the following storage package: (1) vertical partition 20" off rearward wall and the following located forward of the partition: (1) floor mntd roll-out tray w/250lb slds, (1) adjustable roll-out tray w/250lb slds and (1) adjustable shelf. Rearward of partition: (1) adjustable tool board.	$2,902
3390-0007	Compartment [#LOC] to have the following storage package: (1) vertical partition 20" off forward wall and the following located forward of the partition: (1) permanent shelf centered, (1) floor mntd roll-out tray w/250lb slds and (2) adjustable shelves (above permanent shelf). Rearward of partition: (1) permanent shelf 18" off floor, (1) floor mntd roll-out tray w/250lb slds (below permanent shelf) and (2) adjustable tool boards (above the permanent shelf).	$3,819
3390-0008	Compartment [#LOC] to have the following storage package: (1) vertical partiton centered off forward wall and the following located forward of the partiton: (1) permanent shelf centered, (1) floor mntd roll-out tray w/250lb slds and (2) adjustable shelves. Rearward of partition: (1) permanent shelf 24" off floor, (1) floor mntd roll-out tray w/250lb slds (below permanent shelf) and (2) adjustable tool boards (above the permanent shelf).	$3,819
3390-0009	Compartment [#LOC] to have the following storage package: (1) vertical partition 20" off rearward wall and the following located forward of the partition: (1) permanent shelf centered, (1) floor mntd roll-out tray w/250lb slds and (2) adjustable shelves. Adjustable tracking to be provided above (as applicable) and below permanent shelf. Rearward of partition: (1) adjustable tool board.	$2,424
3390-0010	Compartment [#LOC] to have the following storage package: (1) vertical partition 20" off forward wall and the following located rearward of the partition: (1) permanent shelf 15" off floor, (1) floor mntd roll-out tray w/250lb slds (below permanent shelf) and (2) adjustable tool boards (above the permanent shelf).	$2,592
3390-0011	Compartment [#LOC] to have the following storage package: (1) vertical partition 20" off rearward wall and the following located forward of the partition: (1) permanent shelf 15" off floor, (1) floor mntd roll-out tray w/250lb slds (below permanent shelf) and (2) adjustable tool boards (above the permanent shelf).	$2,592
3390-0012	Compartment [#LOC] to have the following storage package: (2) vertical partions- (1) 18" off forward and (1) 18" off rearward wall and the following located forward of the forward partion: OPEN. Centered between partions: (1) permanent shelf 24" off floor, (1) floor mntd roll-out tray w/250lb slds (below permanent shelf) and (2) adjustable tool boards (above the permanent shelf). Rearward of the rear partion: OPEN.	$2,663
3390-0021	Compartment [#LOC] to have the following storage package: (1) vertical partition 20" off rearward wall and the following located forward of the partition: (1) floor mntd roll-out tray w/250lb slds and (1) adjustable shelf. Rearward of partition: (2) adjustable tool boards.	$2,815

3390-0050	Bolt-in partition wall. Locate in officer side transverse module roll-out tray. Partition to run full length front to back, partition to be approx. 45" long. Partition to be offset approx 10" back from rearward side lip of roll out tray.	$680
3390-0051	Compartment [#LOC] to have the following storage package: (1) vertical partition 20" off forward wall and the following located forward of the partition: (2) adjustable shelves. Rearward of partition: (2) heavy duty adjustable tool boards.	$2,378
3390-0052	Compartment [#LOC] to have the following storage package: (1) vertical partition 24" off forward wall and the following located forward of the partition: (1) permanent shelf centered, (1) floor mntd roll-out tray w/250lb slds and (2) adjustable shelves (above permanent shelf). Rearward of partition: (1) permanent shelf 18" off floor, (1) floor mntd roll-out tray w/250lb slds (below permanent shelf) and (2) adjustable tool boards (above the permanent shelf).	$3,819
3390-0054	Compartment [#LOC] to have the following storage package: (1) vertical partition 20" off forward wall and the following located forward of the partition: (3) adjustable shelves. Rearward of partition: (2) adjustable heavy duty tool boards.	$2,862
3390-0055	Compartment [#LOC] to have the following storage package: (1) vertical partition 14" off rearward wall and the following located forward of the partition: (1) adjustable shelf with tracks, (1) floor mounted Slide Master with tray model SM3-SP slides and (1) adjustable roll-out tray w/250lb slides.	$2,577
3390-0059	Compartment [#LOC] to have the following storage package: (1) vertical partition 18" off rearward wall and the following located forward of the partition: (1) adjustable shelves.	$453
3390-0060	Compartment [#LOC] to have the following: (1) vertical partition located 10" off rearward wall (full height and depth as applicable). Forward of vertical partition: (1) fixed back wall mounted peg toolboard in the upper section and spaced off back wall .5" and (1) permanent shelf at offset.	$587
3390-0062	Compartment [#LOC] to have the following storage package: (1) vertical partition 20" off rearward wall and the following located forward of the partition: (2) adjustable heavy duty peg tool boards. Rearward of partition: (1) floor mntd roll-out tray w/500lb slds and (2) adjustable shelves.	$3,408
3390-0063	Compartment [#LOC] to have the following storage package: (1) vertical partition 20" off rearward wall and the following located forward of the partition: (2) adjustable peg tool boards. Rearward of partition: (3) adjustable shelves.	$2,972
3390-0067	Compartment [#LOC] to have the following storage package: (1) vertical partition centered off forward wall and the following located forward of the partition: (2) adjustable tool boards. Rearward of partition: (2) adjustable shelf.	$2,362
3390-0068	Compartment [#LOC] to have the following storage package: (1) vertical partition 20" off rearward wall and the following located forward of the partition: (1) adjustable shelf. Rearward of the partition: (1) floor mounted 500# roll-out tray to hold Speedy Dry Hopper. Tray to have notch on front wall for Speedy Dry Hopper valve. Hopper to hold #100 pounds.	$2,907
3390-0070	Compartment [#LOC] to have the following storage package: (1) vertical partition 20" off rearward wall and the following located forward of the partition: (1) floor mntd roll-out tray w/250lb slds and (3) adjustable shelves. Rearward of partition: (1) adjustable tool board.	$2,701
3390-0074	Compartment [#LOC] to have the following storage package: (1) vertical partition 14" off rearward wall and the following located forward of the partition: (1) floor mntd roll-out tray w/250lb slds, (1) adjustable roll-out tray w/250lb slds and (1) adjustable shelf. Rearward of partition: (2) adjustable tool board.	$4,035
3390-0080	Compartment L3 to have the following: (1) vertical partition located 14" from forward wall and (2) adjustable shelves with adjustable tracking forward of partition.	$921
3390-0082	Compartment [#LOC] to have the following storage package: (1) vertical partiton centered off forward wall and the following located forward of the partiton: (2) adjustable shelves. Rearward of partition: (3) adjustable shelves, (1) floor mntd roll-out tray 500 lb capacity and (2) adjustable roll-out trays 500 lb capacity.	$4,531
3390-0083	Compartment [#LOC] to have the following storage package: (1) vertical partition centered off forward wall and the following located forward of the partition: (1) floor mntd roll-out tray 500 lb capacity, (1) adjustable roll-out tray 500 lb capacity and (2) adjustable shelves. Rearward of partition: (2) adjustable tool boards.	$4,290
3390-0084	Compartment [#LOC] to have the following storage package: (1) vertical partition 18" off rearward wall and the following located forward of the partition: (1) floor mntd roll-out tray w/250lb slds and (2) adjustable shelves.	$1,609
3390-0086	Compartment [#LOC] to have the following storage package: (1) vertical partition 30" off forward wall and the following located forward of the partition: (1) floor mntd roll-out tray w/250lb slds, (1) adjustable roll-out/tilt down tray w/250lb slds and (1) adjustable shelf. Rearward of partition: (1) adjustable tool boards.	$3,660
3390-0088	Compartment [#LOC] to have the following storage package: (1) vertical partition 30" off forward wall and the following located forward of the partition: (1) adjustable toolboard. Rearward of partition: (3) adjustable shelves.	$1,920
3390-0089	Compartment [#LOC] to have the following storage package: (1) vertical partition 22" off forward wall and the following located rearward of the partition: (1) adjustable shelf.	$576
3390-0090	Compartment [#LOC] to have the following storage package: (1) vertical partition 14" off rearward wall and the following located forward of the partition: (1) adjustable shelf. Rearward of partition: (1) adjustable toolboard.	$1,422
3390-0091	Compartment [#LOC] to have the following storage package in the lower full depth area: (1) vertical partition centered off forward wall and the following located forward of the partition: (1) adjustable shelf.	$576
3390-0092	Compartment [#LOC] to have the following storage package: (1) vertical partition 18" off driver side wall and the following located to the officer side of the partition: (2) adjustable shelves.	$825
3390-0093	Compartment [#LOC] to have the following storage package: (1) vertical partition 20" off forward wall and the following located forward of the partition: (2) adjustable shelves. Rearward of partition: (2) adjustable peg tool boards.	$2,696

3390-0095	Compartment [#LOC] to have the following storage package: (1) vertical partition 24" off forward wall and the following located forward of the partition: (1) floor mntd roll-out tray w/250lb slds and (2) adjustable shelves. Rearward of partition: (1) adjustable tool board.	$2,460
3390-0096	Compartment [#LOC] to have the following storage package: (1) vertical partition 14" off rearward wall and the following located forward of the partition: (1) floor mntd roll-out tray w/500lb slides, (1) adjustable roll-out tray w/500lb slides and (1) adjustable shelf with tracks.	$2,771
3390-0097	Compartment [#LOC] to have the following storage package: (2) adjustable roll-out tray w/500lb slides, (1) adjustable shelf with tracks and (1) SCBA/Fire Extinguisher storage rack floor mounted to hold (4) bottles to be stored angled downward in the compartment. The bottom and sides are to include composite material. Each storage slot to be 10" wide x 10" high.	$4,907
3390-0098	Compartment [#LOC] to have the following storage package: (1) air bag storage rack offset rearward and the following located forward of the storage rack: (1) adjustable shelf with tracks and (1) poly box floor mounted. The air bag storage rack to have (6) slots, each slot to be 2"W x 21"H x 24"D. The poly box to be 15"W x 10"H x 24"D..	$2,188
3390-0099	Compartment [#LOC] to have the following storage package: (1) floor mntd roll-out tray w/500lb slides, (1) adjustable roll-out tray w/500lb slides and (2) adjustable shelf with tracks. Floor mounted roll-out tray to have 10" high side walls.	$3,913
3390-0100	Compartment [#LOC] to have the following storage package: (1) vertical partition 12" off rearward wall and the following located forward of the partition: (3) adjustable shelves - (2) shevles located above breaker box and (1) shelf located below. Rearward of partition: (1) adjustable tool board.	$2,015
3390-0101	Compartment [#LOC] to have the following storage package: (1) permanent shelf mounted 18" above compartment floor. Above the permanent shelf: (1) vertical partition located 15" off rearward wall and (1) adjustable toolboard rearward of the vertical partition.	$1,288
3390-0102	Compartment [#LOC] to have the following storage package: (1) vertical pegboard partition 14" off rear wall and the following located forward of the partition: in upper area (2) adjustable shelf and (1) permanent shelf at offset (above extrusion if applicable).	$751
3390-0103	Compartment [#LOC] to have the following storage package in upper area: (2) adjustable shelf. In lower area: (2) adjustable toolboards in forward area, (1) #500 floor mounted roll-out tray in rearward 30" and (1) permanent shelf at offset below extrusion.	$2,998
3390-0109	Compartment [#LOC] to have the following storage package: (1) vertical partition 17" off rearward wall and the following located forward of the partition: (1) floor mntd roll-out tray w/250lb slds and (2) adjustable shelves. Rearward of partition: (1) adjustable tool board.	$2,460
3390-0110	Compartment [#LOC] lower section to have the following storage package: (1) vertical partition 20" off rearward wall and the following located forward of the partition: (1) floor mounted 500# roll-out tray and (1) adjustable shelf. Rearward of the partition: (1) floor mounted 500# roll-out tray to hold Speedy Dry Hopper. Tray to have notch on front wall for Speedy Dry Hopper valve. Hopper to hold #100 pounds.	$2,485
3390-0114	Compartment [#LOC] to have the following storage package in the lower full depth area: (1) vertical partition located at compartment offset and the following located forward of the partition: (1) floor mntd roll-out tray w/500lb slds and (1) adjustable shelf.	$1,475
3390-0116	Compartment [#LOC] to have the following storage package: (1) vertical partition 20" off rearward wall and the following located forward of the partition: (3) adjustable shelves. Rearward of partition: (1) adjustable tool board.	$2,023
3390-0117	Compartment [#LOC] to have the following storage package in full depth lower area: (1) vertical partition 46" off rearward wall and the following located rearward of the partition: (1) adjustable mounted roll-out tray w/500lb slides	$1,469
3390-0120	Compartment [#LOC] to have the following storage package in the lower full depth area: (1) vertical partition located at compartment offset and the following located forward of the partition: (1) floor mntd roll-out tray w/500lb slds and (1) adjustable roll-out tray w/250lb slds.	$2,213
3390-0123	Bolt-in partition wall. Locate 26" back from inside of extrusion of [#LOC] door opening. Partition will run from the front of truck to rear of truck dividing officerside from drivers side of transverse area.	$341
3390-0124	Compartment [#LOC] to have the following storage package: (1) floor mounted 500# roll-out tray to hold Speedy Dry Hopper. Tray to have notch on front wall for Speedy Dry Hopper valve to hold #50 pounds.	$1,926
3390-0127	Compartment [#LOC] to have the following storage package: (1) vertical partition 24" off forward wall and the following located rearward of the partition: (1) adjustable shelf.	$576
3390-0132	Compartment [#LOC] to have the following storage package: (1) vertical pegboard partition 20" off forward wall and the following located forward of the partition: (1) floor mntd roll-out tray w/500lb slds, (1) adjustable tilt-down roll-out tray and (1) adjustable shelf. Rearward of partition: (1) adjustable pegboard tool board.	$3,892
3390-0143	Compartment [#LOC] to have the following storage package: (1) vertical partition 12" off forward wall and the following located rearward of partition: (1) floor mntd roll-out tray, (1) adjustable shelf and (1) adjustable roll-out/tilt down tray.	$2,566
3390-0151	Compartment [#LOC] to have the following storage package: (1) vertical partition 13" off forward wall and the following located rearward of the partition: (1) adjustable shelf.	$674
3390-0217	Compartment [#LOC] to have the following storage package: (1) vertical partition 27" off rearward wall and the following located forward of the partition: (1) floor mntd roll-out tray w/500lb slds and (1) adjustable shelf. Rearward of partition: (1) adjustable heavy duty toolboard.	$2,267
3390-0234	Compartment [#LOC] to have the following storage package: (1) vertical partition 20" off rearward wall and the following located forward of the partition: (2) adjustable shelves. Rearward of partition: (1) adjustable heavy duty toolboard.	$2,376
3390-0260	Compartment [#LOC] to have the following storage package: (1) vertical partition 10" off rearward wall and the following located forward of the partition: (2) adjustable shelves. Rearward of partition: (1) 17' Little Giant Ladder.	$906
3390-0261	Compartment [#LOC] to have the following storage package: (1) vertical partition 16" off forward wall and the following located forward of the partition: (3) adjustable shelves. Rearward of partition: (1) adjustable heavy duty toolboard.	$2,993

3390-0266	Compartment [#LOC] to have the following storage package: (1) vertical partition 26" off forward wall and the following located forward of the partition: (1) floor mntd roll-out tray w/500lb slds and (2) adjustable shelves. Rearward of partition: (2) adjustable heavy duty tool boards.	$3,062
3390-0267	Compartment [#LOC] to have the following storage package: (1) vertical partition centered off forward wall and the following located forward of the partition: (1) floor mounted roll-out tray. Rearward of partition: (2) adjustable shelves.	$2,020
3390-0268	Compartment [#LOC] to have the following storage package: (1) vertical partition centered off forward wall and the following located forward of the partition: (1) adjustable shelf. Rearward of partition: (1) floor mounted roll-out tray.	$1,573
3390-0271	Compartment [#LOC] to have the following storage package: (1) vertical partition 26" off forward wall and the following located forward of the partition: (3) adjustable shelves. Rearward of partition: (2) adjustable heavy duty tool boards.	$2,862
3390-0272	Compartment [#LOC] to have the following storage package: (1) vertical partition 16" off rearward wall and the following located forward of the partition: (4) adjustable shelves. Rearward of partition: Speedy Dry Valve and Hose.	$1,696
3390-0273	Compartment [#LOC] to have the following storage package: (1) vertical partition 24" off rearward wall and the following located forward of the partition: (1) adjustable tray, (1) adjustable roll-out tilt down tray and (1) floor mounted slide-out tray. Rearward of partition: (2) adjustable slide-out toolboards.	$5,468
3390-0274	Compartment [#LOC] to have the following storage package: (1) vertical partition 22" off rearward wall and the following located forward of the partition: (1) floor mntd roll-out tray w/500lb slides and (2) adjustable shelves w/500lb slides . Rearward of partition: (1) adjustable roll out heavy duty tool board w/500lb slides.	$2,658
3390-0275	Compartment [#LOC] to have the following storage package: (1) vertical partition 11" off forward wall and the following located rearward of the partition: (1) adjustable shelf with tracks in lower area and (1) adjustable roll out tilt down tray above.	$1,939
3390-0277	Compartment [#LOC] to have the following storage package: (1) vertical partition 18" off forward wall and the following located forward of the partition: (1) adjustable toolboard. Rearward of partition: (2) adjustable shelves.	$1,792
3390-0278	Compartment [#LOC] to have the following storage package: (1) vertical partition approximately 12" off rearward wall and the following located forward of the partition: (2) adjustable roll out heavy duty tool boards w/500lb slides . Rearward of partition: (3) adjustable shelves.	$2,876
3390-0279	Compartment [#LOC] to have the following storage package: (1) vertical partition rearward of cord reel and the following located rearward of partition: (1) adjustable shelf.	$676
3390-0280	Storage system for compartment [#LOC]. Includes vertical partition offset 20" from rearward wall, (2) adj. HD tool boards to rear of partition. (1) Adjustable rollout tray, (1) floor mounted rollout tray and (1) adjustable shelf (notched for clearance as required in the upper storage location) all ahead of partition.	$4,096
3390-0281	Compartment [#LOC] to have the following storage package: (2) Full width permanent shelves, (1) approximately 24" off the floor and (1) approximately 49" off the floor. (1) Vertical partition approximately 12" off forward wall located between the full width permanent shelves. The following located forward of the partition: (2) adjustable shelve. Rearward of partition: (1) adjustable roll out heavy duty tool board w/500lb slides .	$2,475
3390-0282	Compartment [#LOC] to have the following storage package: (1) vertical partition approximately 8" off rearward wall and the following located forward of the partition: (1) floor mounted roll-out tray w/500lb slides, (1) fixed shelf approximately 25" from the ceiling.	$1,170
3390-0283	Compartment [#LOC] to have the following storage package: (1) vertical partition approximately 13" off rearward wall, (1) fixed shelf mounted at the compartment offset below extrusion.	$481
3390-0286	Compartment [#LOC] to have the following storage package: (1) vertical partition approximately 20" off rearward wall and the following located forward of the partition: (1) floor mounted roll out tray w/ 500lb slides and (2) adjustable roll-out tray w/500lb slides (1) upper and (1) lower. Rearward of partition: (2) adjustable roll out heavy duty tool boards w/500lb slides.	$4,310
3390-0287	Compartment [#LOC] to have the following storage package: (1) vertical partition centered off forward wall and the following located rearward of partition: (1) floor mounted roll-out tray and (1) adjustable shelf.	$1,573
3390-0288	Compartment [#LOC] to have the following storage package: (1) vertical partition centered off rearward wall and the following located forward of the partition: (1) adjustable heavy duty peg tool board and fixed forward wall mounted peg toolboard spaced off wall a half inch. Rearward of partition: (3) adjustable shelves.	$2,527
3390-0289	Compartment L1 to have the following storage package: (1) floor mounted roll out tray w/ 500lb slides extending approximately 40" from the forward wall. Rearward of floor mounted tray (1) roll out heavy duty tool board with Pac Trac panels vertically stacked on each side of tool board.	$1,514
3390-0290	Compartment [#LOC] to have the following storage package: (1) vertical partition 15" off rearward wall and the following located forward of the partition: (1) 2"x2" angle floor mounted to outside edge and (1) permanent shelf just below breaker box. Rearward of partition: (1) adjustable heavy duty tool boards.	$1,365
3390-0291	Compartment [#LOC] to have the following storage package in the lower full depth area: (1) vertical partition 15" off forward wall and the following located forward of the partition: (1) adjustable heavy duty toolboard. Rearward of partition: (1) adjustable shelf.	$1,524
3390-0293	Compartment [#LOC] to have the following storage package: (1) vertical partition 12" off forward wall, and the following located forward of the partition: (1) adjustable tool board, rearward of the partition: (3) adjustable shelves.	$2,344
3390-0294	Compartment [#LOC] to have the following storage package: (1) vertical partition 8" off rearward wall, and the following located forward of the partition: (1) floor mntd roll-out tray w/500lb slds, (3) adjustable shelves. Rearward of partition: open for storage.	$1,894
3390-0296	Compartment [#LOC] to have the following storage package: (1) vertical partition 25" off forward wall and the following located forward of the partition: (1) floor mntd roll-out tray w/500lb slds and (2) adjustable shelves. Rearward of partition: (2) adjustable heavy duty tool boards.	$3,062

3390-0300	Compartment [#LOC] to have the following storage package: (1) vertical partition 24" off forward wall and the following located forward of the partition: (1) floor mntd roll-out tray w/500lb slds and (2) adjustable shelves. Rearward of partition: (2) adjustable heavy duty tool boards.	$3,062
3390-0301	Compartment [#LOC] to have the following storage package: (1) vertical partition 24" off rearward wall and the following located forward of the partition: (1) floor mntd roll-out tray w/500lb slds and (2) adjustable shelves. Rearward of partition: (1) adjustable tool board with 500# slides includes upper and lower adjustable track. Toolboard sized to compartment height and depth as applicable. The ceiling shall be cut to allow the hydraulic reel lines to drop into R2 from the roof top compartment above. The cutout shall include captive rollers and visibility to the reels as mounted above.	$3,189
3390-0302	Compartment [#LOC] to have the following storage package: (1) vertical partition 27" off rearward wall and the following located forward of the partition: (1) adjustable heavy duty toolboard. Rearward of partition: (1) floor mntd roll-out tray w/500lb slds and (1) adjustable shelf.	$2,267
3390-0303	Compartment [#LOC] to have the following storage package: (1) vertical partition 24 " off forward wall and the following located forward of the partition: (1) floor mounted roll-out tray w/500lb slides and (2) adjustable shelves. Rearward of partition: (2) adjustable heavy duty tool boards.	$3,062
3390-0304	Compartment [#LOC] to have the following storage package: (1) vertical partition 20" off forward wall and the following located forward of the partition: (2) adjustable shelves. Rearward of partition: (2) adjustable heavy duty tool boards.	$2,374
3390-0308	Compartment [#LOC] to have the following storage package: (1) vertical partition centered within the compartment and the following located forward of the partition: (2) adjustable shelves.	$825
3390-0311	Compartment [#LOC] to have the following storage package: (1) vertical partition 20" off forward wall and the following located forward of the partition: (1) adjustable heavy duty toolboard. Rearward of partition: (1) adjustable mounted roll-out/tilt-down tray, (1) adjustable shelf and (1) floor mounted 500# roll-out tray.	$3,501
3390-0312	Compartment [#LOC] to have the following storage package: (1) vertical partition 20" off rearward wall and the following located forward of the partition: (1) adjustable heavy duty toolboard. Rearward of partition: (1) adjustable mounted roll-out/tilt-down tray.	$2,560
3390-0314	Compartment [#LOC] to have the following storage package: (1) vertical partition 16" off forward wall and the following located forward of the partition: (1) adjustable shelf and (1) adjustable roll out tray with a 2" front lip and mechanical latching system. Rearward of partition: (2) adjustable heavy duty peg tool bards, these toolboards shall use mechanical latches (no gas shocks).	$4,359
3390-0315	Compartment [#LOC] to have the following storage package: (1) vertical partition 16" off forward wall and the following located forward of the partition: (1) adjustable shelf . Rearward of partition: (2) adjustable heavy duty peg tool boards , these tool boards shall use mechanical latches (no gas shocks)..	$3,157
3390-0316	Compartment [#LOC] to have the following storage package: (1) vertical partition 20" off forward wall and the following located forward of the partition: (1) adjustable shelf. Rearward of partition: (2) adjustable heavy duty peg tool boards, these toolboards shall use mechanical latches (no gas shocks).	$2,444
3390-0317	Compartment [#LOC] to have the following storage package: (1) vertical partition 20" off forward wall and the following located forward of the partition: (1) adjustable heavy duty tool board. Rearward of partition: (1) floor mntd roll-out tray w/500lb slds and (2) adjustable shelves.	$2,215
3390-0318	Compartment [#LOC] to have the following storage package: (1) vertical partition 12" off forward wall and the following located forward of the partition: (1) adjustable heavy duty toolboard. Rearward of partition: (2) adjustable shelves.	$2,374
3390-0319	Compartment [#LOC] to have the following storage package: (1) vertical partition 14" off rearward wall and the following located forward of the partition: (1) floor mntd roll-out tray w/500lb slds and (2) adjustable shelves. Rearward of partition: (1) adjustable heavy duty toolboard.	$3,062
3390-0320	Storage system for compartment [#LOC]. Includes vertical partition 24" from left side wall, (2) adj. HD tool peg boards rearward of partition and (2) adjustable shelves ahead of partition. Aerial application.	$2,894
3390-0328	Compartment [#LOC] to have the following storage package: (1) vertical partition 20" off forward wall and the following located rearward of the partition: (1) floor mntd roll-out tray w/500lb slds and (2) adjustable shelves. Forward of partition: (2) adjustable heavy duty tool boards.	$3,062
3390-0350	Compartment [#LOC] to have the following storage package: (1) vertical partition 17" off rearward wall and the following located forward of the partition: (1) 2"x2" angle floor mounted to outside edge and (1) permanent shelf just below breaker box. Rearward of partition: (1) adjustable heavy duty tool boards.	$1,365
3390-0361	Compartment [#LOC] to have the following storage package: (1) vertical partition 18" off rearward wall and the following located forward of the partition: (3) adjustable heavy duty pegboard toolboards. Rearward of partition: (3) adjustable shelves.	$4,415
3390-0362	Compartment [#LOC] to have the following storage package: (1) vertical partiton 18" off forward wall and the following located forward of the partiton: (1) adjustable shelf. Rearward of partition: (1) floor mntd roll-out tray 500 lb capacity, (2) adjustable roll-out trays 500 lb capacity and (1) adjustable shelf.	$3,795
3390-0365	Compartment [#LOC] to have the following storage package: (1) vertical partition located 12" off forward wall and the following located forward of the partition: open area for speedy dry hopper hose. Rearward of partition: (3) adjustable heavy duty tool boards.	$3,730
3390-0405	Compartment [#LOC] to have the following storage package: (1) vertical partition 20 in. off forward wall and the following located forward of the partition: (1) floor mounted roll-out tray w/500lb slides and (2) adjustable shelves. Rearward of partition: (2) heavy duty adjustable peg tool boards.	$3,764
3390-0426	Compartment [#LOC] to have the following storage package: (1) vertical partition 30" off forward wall and the following located rearward of the partition: (1) floor mounted roll-out tray w/500lb slides and (1) adjustable roll-out tray w/500lb slides with tracks. Forward of partition: (1) adjustable heavy duty tool board.	$3,013
	WATER AND FOAM TANKS	$0

4010-0016	530 Gallon "T" Water Tank. Note: Any foam cell(s) will reduce the overall water capacity. Tank capacity is 530 US gallons / 441 Imperial gallons / 2006 Liters.	$5,869
4010-0017	780 Gallon "T" Water Tank. Note: Any foam cell(s) and/or storage options thru the tank will reduce the overall water capacity. Tank capacity is 780 US gallons / 649 Imperial gallons / 2952 Liters.	$6,498
4010-0018	1030 Gallon "T" Water Tank. Note: Any foam cell(s) and/or storage options thru the tank will reduce the overall water capacity. Tank capacity is 1030 US gallons / 857 Imperial gallons / 3898 Liters.	$8,090
4010-0019	1280 Gallon "T" Water Tank. Note: Any foam cell(s) and/or storage options thru the tank will reduce the overall water capacity. Tank capacity is 1280 US gallons / 1065 Imperial gallons / 4845 Liters.	$10,340
4010-0020	1530 Gallon"T" Water Tank. Note: Any foam cell(s) and/or storage options thru the tank will reduce the overall water capacity. Tank capacity is 1530 US gallons / 1273 Imperial gallons / 5791 Liters.	$12,420
4010-0035	530 Gallon "R" Water Tank Note: Any foam cell(s) will reduce the overall water capacity. Tank capacity is 530 US gallon / 441 Imperial gallons / 2006 Liters.	$5,372
4010-0036	780 Gallon "R" Water Tank. Note: Any foam cell(s) and/or storage options thru the tank will reduce the overall water capacity. Tank capacity is 780 US gallon / 649 Imperial gallons / 2952 Liters.	$6,420
4010-0037	1030 Gallon "R" Water Tank. Note: Any foam cell(s) and/or storage options through the tank will reduce the overall water capacity. Tank capacity is 1030 US gallon / 857 Imperial gallons / 3898 Liters.	$7,815
4010-0038	1280 Gallon "R" Water Tank. Note: Any foam cell(s) and/or storage options thru the tank will reduce the overall water capacity. Tank capacity is 1280 US gallon / 1065 Imperial gallons / 4845 Liters.	$9,719
4010-0057	530 Gallon "L" shaped Water Tank. Includes lowered rear section for lower hose bed height. Note: Any foam cell(s) optioned will reduce the overall water capacity. Tank capacity is 530 US gallon / 441 Imperial gallons / 2006 Liters.	$8,655
4010-0058	1030 Gallon "T" Water Tank. Includes lower upper "T" for lower hosebed height. Note: Any foam cell(s) optioned will reduce the overall water capacity. Tank capacity is 1030 US gallon / 857 Imperial gallons / 3898 Liters.	$8,090
4010-0059	530 Gallon "T" Water Tank. Includes raised lower "T" and rear tank overhang for shallow upper area rear compartment. Note: Any foam cell(s) will reduce the overall water capacity. Tank capacity is 530 US gallon / 441 Imperial gallons / 2006 Liters.	$7,334
4010-0060	530 Gallon "T" Water Tank. Includes raised lower "T" and rear tank overhang for deep upper area rear compartment. Note: Any foam cell(s) will reduce the overall water capacity. Tank capacity is 530 US gallon / 441 Imperial gallons / 2006 Liters.	$7,774
4010-0061	530 Gallon "T" Water Tank. Includes lowered "T" and rear tank overhang for shallow upper area rear compartment. Note: Any foam cell(s) will reduce the overall water capacity. Tank capacity is 530 US gallon / 441 Imperial gallons / 2006 Liters.	$5,869
4010-0064	780 Gallon" L" shape Water Tank. Includes lowered rear section for lower hosebed height. Note: Any foam cell(s) optioned will reduce the overall water capacity. Tank capacity is 780 US gallon / 649 Imperial gallons / 2952 Liters.	$9,285
4010-0067	875 Gallon "R" Water Tank (Special add for Canada bid that has specific Imperial capacity). Tank capacity is 875 US gallon / 728 Imperial gallons / 3312 Liters.	$7,815
4010-0071	780 Gallon "R" Water Tank. Note: Any foam cell(s) and/or storage options thru the tank will reduce the overall water capacity. Tank capacity is 780 US gallon / 649 Imperial gallons / 2952 Liters.	$7,658
4010-0072	1030 Gallon" L" shape Water Tank. Includes lowered rear section for lower hose bed height. Note: Any foam cell(s) optioned will reduce the overall water capacity. Tank capacity is 1030 US gallon / 857 Imperial gallons / 3898 Liters.	$11,487
4010-0073	530 Imperial Gallon "R" water tank. Note: Any foam cell(s) and/or storage options through the tank will reduce the overall water capacity.	$6,181
4010-0074	530 Gallon "T" Water Tank. Note: Any foam cell(s) will reduce the overall water capacity. Fill towers to be located side by side and offset rearward due to hosebed storage pan partition. Tank capacity is 530 US gallon / 441 Imperial gallons / 2006 Liters.	$7,245
4010-0076	3530 Gallon "T" Water Tank. Note: Any foam cell(s) and/or storage options thru the tank will reduce the overall water capacity. Tank capacity is 3530 US gallons / 2939 Imperial gallons / 13362 Liters.	$28,615
4010-0077	1250 Gallon "T" Water Tank. Note: Any foam cell(s) and/or storage options thru the tank will reduce the overall water capacity. Tank capacity is 1250 US gallons / 1040 Imperial gallons / 4731 Liters.	$10,340
4010-0078	1250 Gallon "R" Water Tank. Note: Any foam cell(s) and/or storage options thru the tank will reduce the overall water capacity. Tank capacity is 1250 US gallons / 1040 Imperial gallons / 4731 Liters.	$9,719
4010-0080	300 Gallon R Poly Water Tank	$5,236
4010-0081	1030 Gallon "T" Water Tank. Note: Any foam cell(s) and/or storage options thru the tank will reduce the overall water capacity. Tank capacity is 1030 US gallons / 857 Imperial gallons / 3898 Liters. Includes modifications for 4x4 and plumbing applications as required.	$10,112
4010-0083	Fill tower locations. Water and Foam "A" fill towers to be located driver side of hosebed and Foam "B" fill tower to be located to officer side of hosebed.	$304
4010-0090	530 Gallon "R" Water Tank Note: Any foam cell(s) will reduce the overall water capacity. Tank capacity is 530 US gallon / 441 Imperial gallons / 2006 Liters. For use with rear mounted pumps only.	$4,749
4010-0092	1030 Gallon "R" Water Tank. Note: Any foam cell(s) and/or storage options thru the tank will reduce the overall water capacity. Tank capacity is 1030 US gallon / 857 Imperial gallons / 3898 Liters. For use with rear mounted pumps only.	$6,996

4010-0097	780 Gallon "T" Water Tank. Note: Any foam cell(s) and/or storage options thru the tank will reduce the overall water capacity. Tank capacity is 780 US gallon / 649 Imperial gallons / 2952 Liters. Includes modifications for 4x4 and plumbing applications as required.	$8,122
4010-0100	1530 Gallon "T" Water Tank. Note: Any foam cell(s) and/or storage options thru the tank will reduce the overall water capacity. Tank capacity is 1530 US gallons / 1273 Imperial gallons / 5791 Liters.	$11,040
4010-0101	1830 Gallon "T" Water Tank. Note: Any foam cell(s) and/or storage options thru the tank will reduce the overall water capacity. Tank capacity is 1830 US gallons / 1523 Imperial gallons / 6927 Liters.	$13,126
4010-0102	2030 Gallon "T" Water Tank. Note: Any foam cell(s) and/or storage options thru the tank will reduce the overall water capacity. Tank capacity is 2030 US gallons / 1690 Imperial gallons / 7684 Liters.	$14,516
4010-0117	Fill tower locations. Water fill tower to be located driver side of hosebed and foam fill tower to be located to officer side of hosebed.	$304
4010-0118	2030 Gallon Tandem "T" Water Tank. Note: Any foam cell(s) and/or storage options thru the tank will reduce the overall water capacity. Tank capacity is 2030 US gallons / 1690 Imperial gallons / 7684 Liters.	$15,905
4010-0119	1070 Gallon "T" Water Tank. Note: Any foam cell(s) and/or storage options thru the tank will reduce the overall water capacity. Tank capacity is 1070 US gallons / 890 Imperial gallons / 4050 Liters.	$8,403
4010-0120	2530 Gallon Tandem "T" Water Tank. Note: Any foam cell(s) and/or storage options thru the tank will reduce the overall water capacity. Tank capacity is 2530 US gallons / 2106 Imperial gallons / 9577 Liters.	$19,822
4010-0121	3030 Gallon Tandem "T" Water Tank. Note: Any foam cell(s) and/or storage options thru the tank will reduce the overall water capacity. Tank capacity is 3030 US gallons / 2523 Imperial gallons / 11469 Liters.	$23,738
4010-0125	1030 Gallon "R" Water Tank. Note: Any foam cell(s) and/or storage options thru the tank will reduce the overall water capacity. Tank capacity is 1030 US gallon / 857 Imperial gallons / 3898 Liters. Includes modifications for 4x4 and plumbing applications as required.	$9,767
4010-0128	820 Gallon "R" Water Tank. Note: Any foam cell(s) and/or storage options thru the tank will reduce the overall water capacity. Tank capacity is 820 US gallon / 682 Imperial gallons / 3104 Liters.	$6,916
4010-0129	1830 Gallon "T" Water Tank. Note: Any foam cell(s) and/or storage options thru the tank will reduce the overall water capacity. Tank capacity is 1830 US gallons / 1523 Imperial gallons / 6927 Liters.	$14,856
4010-0131	750 Gallon "T" Water Tank. Note: Any foam cell(s) and/or storage options thru the tank will reduce the overall water capacity. Tank capacity is 750 US gallon. For use with rear mounted pumps only.	$5,713
4010-0132	1730 Gallon "T" Water Tank. Note: Any foam cell(s) and/or storage options thru the tank will reduce the overall water capacity. Tank capacity is 1730 US gallons / 1440 Imperial gallons / 6548 Liters.	$14,044
4010-0133	1530 Gallon "T" Water Tank. Note: Any foam cell(s) and/or storage options thru the tank will reduce the overall water capacity. Tank capacity is 1530 US gallons / 1273 Imperial / 5791 Liters gallons. Includes modifications for 4x4 and plumbing applications as required.	$15,525
4010-0134	3000 gallon wide Wetside water tank. Tank capacity is 3000 US gallons / 2498 Imperial gallons / 11356 Liters. For use with single rear tank dump.	$14,059
4010-0138	400 Gallon "R" Water Tank Note: Any foam cell(s) will reduce the overall water capacity. Tank capacity is 400 US gallon / 333 Imperial gallons / 1514 Liters.	$4,090
4010-0139	3000 gallon narrow Wetside water tank. Tank capacity is 3000 US gallons / 2498 Imperial gallons / 11356 Liters. For use with single rear tank dump.	$15,175
4010-0141	530 Gallon "T" Water Tank (no "T" section to officer side of tank). Note: Any foam cell(s) and/or storage options thru the tank will reduce the overall water capacity. Tank capacity is 530 US gallons / 441 Imperial gallons / 2006 Liters.	$6,498
4010-0143	780 Gallon "R" Water Tank. Note: Any foam cell(s) and/or storage options thru the tank will reduce the overall water capacity. Tank capacity is 780 US gallon / 649 Imperial gallons / 2952 Liters. Includes modifications for 4x4 and plumbing applications as required.	$8,024
4010-0145	650 Gallon "R" Water Tank. Note: Any foam cell(s) and/or storage options thru the tank will reduce the overall water capacity. Tank capacity is 650 US gallons / 541 Imperial gallons / 2460 Liters.	$5,345
4010-0146	580 Gallon "R" water tank. Foam cells reduce the base amount of water.	$5,879
4010-0147	1080 Gallon "R" Water Tank. Note: Any foam cell(s) and/or storage options through the tank will reduce the overall water capacity. Tank capacity is 1080 US gallon / 899 Imperial gallons / 4088 Liters.	$8,196
4010-0148	800 Gallon "R" Water Tank. Note: Any foam cell(s) and/or storage options thru the tank will reduce the overall water capacity. Tank capacity is 800 US gallons / 665 Imperial gallons / 3028 liters.	$8,094
4010-0149	1530 Gallon Tandem "T" Water Tank. Note: Any foam cell(s) and/or storage options thru the tank will reduce the overall water capacity. Tank capacity is 1530 US gallons / 1273 Imperial gallons / 5791 Liters.	$11,988
4010-0150	1030 Gallon "T" Water Tank. Includes driver side flush side for use with full depth compartments/tunnell. Note: Any foam cell(s) optioned will reduce the overall water capacity. Tank capacity is 1030 US gallon / 857 Imperial gallons / 3898 Liters.	$7,779
4010-0152	745 Gallon "R" Water Tank. Note: Any foam cell(s) and/or storage options thru the tank will reduce the overall water capacity. Tank capacity is 745 US gallon / 620 Imperial gallons / 2820 Liters.	$6,130
4010-0154	1530 Gallon "R" Water Tank. Note: Any foam cell(s) and/or storage options thru the tank will reduce the overall water capacity. Tank capacity is 1530 US gallon / 1273 Imperial gallons.	$11,618

4010-0156	2000 Gallon Tandem "T" Water Tank. Note: Any foam cell(s) and/or storage options thru the tank will reduce the overall water capacity. Tank capacity is 2000 US gallons / 1665 Imperial gallons / 7570 Liters.	$15,669
4010-0159	Fill tower locations. The water and foam fill towers shall be relocated so they are centered left to right about the apparatus after the tanks have been loaded.	$304
4010-0174	530 Gallon "T" Water Tank. UPF Poly III color fill towers. Note: Any foam cell(s) will reduce the overall water capacity.	$5,869
4010-0175	530 Gallon "R" Water Tank UPF Poly III color fill towers. Note: Any foam cell(s) will reduce the overall water capacity.	$5,372
4010-0176	780 Gallon "T" Water Tank. UPF Poly III color fill towers. Note: Any foam cell(s) and/or storage options through the tank will reduce the overall water capacity.	$6,498
4010-0177	780 Gallon "R" Water Tank. UPF Poly III color fill towers. Note: Any foam cell(s) and/or storage options through the tank will reduce the overall water capacity.	$6,420
4010-0178	1030 Gallon "T" Water Tank. UPF Poly III color fill towers. Note: Any foam cell(s) and/or storage options through the tank will reduce the overall water capacity.	$8,090
4010-0179	1030 Gallon "R" Water Tank. UPF Poly III color fill towers. Note: Any foam cell(s) and/or storage options through the tank will reduce the overall water capacity.	$7,815
4010-0180	1280 Gallon "T" Water Tank. UPF Poly III color fill towers. Note: Any foam cell(s) and/or storage options through the tank will reduce the overall water capacity.	$10,340
4010-0181	1280 Gallon "R" Water Tank. UPF Poly III color fill towers. Note: Any foam cell(s) and/or storage options through the tank will reduce the overall water capacity.	$9,719
4010-0182	1530 Gallon "T" Water Tank. UPF Poly III color fill towers. Note: Any foam cell(s) and/or storage options through the tank will reduce the overall water capacity.	$12,420
4010-0183	530 Gallon "L" shaped Water Tank. UPF Poly III color fill towers. Includes lowered rear section for lower hose bed height. Note: Any foam cell(s) optioned will reduce the overall water capacity.	$8,655
4010-0184	780 Gallon "L" shape Water Tank. UPF Poly III color fill towers. Includes lowered rear section for lower hose bed height. Note: Any foam cell(s) optioned will reduce the overall water capacity.	$9,285
4010-0185	1030 Gallon "L" shape Water Tank. Includes lowered rear section for lower hose bed height. Note: Any foam cell(s) optioned will reduce the overall water capacity. UPF Poly III color fill towers.	$11,487
4010-0186	530 Gallon "R" Water Tank Note: Any foam cell(s) will reduce the overall water capacity. UPF Poly III color fill towers. For use with rear mounted pumps only.	$4,749
4010-0188	1030 Gallon "R" Water Tank. UPF Poly III color fill towers. For use with rear mounted pumps only. Note: Any foam cell(s) and/or storage options thru the tank will reduce the overall water capacity.	$6,996
4010-0189	1530 Gallon "T" Water Tank. UPF Poly III color fill towers - tanker version. Note: Any foam cell(s) and/or storage options thru the tank will reduce the overall water capacity.	$11,040
4010-0190	1830 Gallon "T" Water Tank. UPF Poly III color fill towers. Note: Any foam cell(s) and/or storage options thru the tank will reduce the overall water capacity.	$13,126
4010-0191	2030 Gallon "T" Water Tank. UPF Poly III color fill towers. Note: Any foam cell(s) and/or storage options thru the tank will reduce the overall water capacity.	$14,516
4010-0192	2030 Gallon Tandem "T" Water Tank. UPF Poly III color fill towers. Note: Any foam cell(s) and/or storage options thru the tank will reduce the overall water capacity.	$15,905
4010-0193	2530 Gallon Tandem "T" Water Tank. UPF Poly III color fill towers. Note: Any foam cell(s) and/or storage options thru the tank will reduce the overall water capacity.	$19,822
4010-0194	3030 Gallon Tandem "T" Water Tank. UPF Poly III color fill towers. Note: Any foam cell(s) and/or storage options thru the tank will reduce the overall water capacity.	$23,738
4010-0211	2900 Gallon Tandem "T" Water Tank. UPF Poly III color fill towers. Note: Any foam cell(s) and/or storage options thru the tank will reduce the overall water capacity. Tank capacity is 2900 US gallons / 2414 Imperial gallons / 10977 Liters.	$22,721
4010-0212	780 Gallon "R" Water Tank for 4x4 chassis. UPF Poly III with color fill towers. Note: Any foam cell(s) and/or storage options thru the tank will reduce the overall water capacity. Tank capacity is 780 US gallon / 649 Imperial gallons / 2952 Liters. Includes modifications for 4x4 and plumbing applications as required.	$8,024
4010-0213	530 Gallon "L" shaped Water Tank UPF Poly III color fill towers. Includes lowered rear section for lower hose bed height. Note: Any foam cell(s) optioned will reduce the overall water capacity. Tank capacity is 530 US gallon / 441 Imperial gallons / 2006 Liters.	$8,655
4010-0214	1030 Gallon "T" Water Tank. UPF Poly III color fill towers. Note: Any foam cell(s) and/or storage options through the tank will reduce the overall water capacity. Tank capacity is 1030 US gallons / 857 Imperial gallons / 3898 Liters. Includes modifications for 4x4 and plumbing applications as required.	$10,112
4010-0217	550 Gallon "R" Water Tank UPF Poly III color fill towers. Note: Any foam cell(s) will reduce the overall water capacity.	$5,748
4010-0222	730 Gallon "R" Water Tank. UPF Poly III color fill towers. Note: Any foam cell(s) and/or storage options thru the tank will reduce the overall water capacity. Tank capacity is 730 US gallon / 608 Imperial gallons / 2766 Liters.	$6,184
4010-0225	1060 Gallon "R" Water Tank. UPF Poly III color fill towers. Note: Any foam cell(s) and/or storage options through the tank will reduce the overall water capacity.	$8,043
4010-0226	1030 Gallon Combo "T" Water Tank. 280 gallons water UPF Poly III blue color fill tower / 750 foam class B UPF Poly III yellow fill tower . Water tank capacity is 280 US gallons / 233 Imperial gallons / 1060 Liters. Foam tank capacity is 750 US gallons / 624 Imperial gallons / 2839 Liters.	$12,263
4010-0227	1030 Gallon Combo "T" Water Tank. 500 gallons water UPF Poly III blue color fill tower / 530 foam class B UPF Poly III yellow fill tower .Included are the notches for hosebed pans and preconnects. Water tank capacity is 500 US gallons / 416 Imperial gallons / 1892 Liters. Foam tank capacity is 530 US gallons / 441 Imperial gallons / 2006 Liters.	$12,434
4010-0231	500 Gallon "R" Water Tank UPF Poly III color fill towers. Note: Any foam cell(s) will reduce the overall water capacity.	$5,372
4010-0233	3530 Gallon Tandem "T" Water Tank. UPF Poly III color fill towers. Note: Any foam cell(s) and/or storage options thru the tank will reduce the overall water capacity.	$26,457

4010-0237	590 Gallon "R" Water Tank. UPF Poly III color fill towers. Note: Any foam cell(s) and/or storage options through the tank will reduce the overall water capacity.	$5,398
4010-0238	880 Gallon "L" shape Water Tank. UPF Poly III color fill towers. Includes lowered rear section for lower hose bed height. Note: Any foam cell(s) optioned will reduce the overall water capacity.	$9,285
4010-0246	Fill tower locations. Water fill tower to be located driver side of hosebed, the Foam "A" centered and Foam "B" fill tower to be located to officer side of hosebed.	$304
4010-0247	720 Gallon "T" Water Tank. UPF Poly III color fill towers. Note: Any foam cell(s) and/or storage options through the tank will reduce the overall water capacity.	$5,808
4010-0248	560 Gallon "T" Water Tank. UPF Poly III color fill towers. Note: Any foam cell(s) and/or storage options through the tank will reduce the overall water capacity.	$4,927
4010-0249	720 Gallon "T" Water Tank. UPF Poly III color fill towers. Note: Any foam cell(s) and/or storage options through the tank will reduce the overall water capacity. Includes modifications for 4x4 and plumbing applications as required.	$5,808
4010-0250	1040 Gallon "R" Water Tank. UPF Poly III color fill towers. Note: Any foam cell(s) and/or storage options through the tank will reduce the overall water capacity.	$7,848
4010-0255	1250 Gallon "T" Water Tank. UPF Poly III color fill towers. Note: Any foam cell(s) and/or storage options through the tank will reduce the overall water capacity.	$10,340
4010-0257	780 Gallon "T" Water Tank (no "T" section to officer side of tank). UPF Poly III color fill towers. Note: Any foam cell(s) and/or storage options thru the tank will reduce the overall water capacity. Tank capacity is 780 US gallons / 649 Imperial gallons / 2952 Liters.	$7,057
4010-0258	Fill tower locations. The water and foam fill towers shall be relocated so they are centered left to right about the apparatus after the tank has been loaded. Fill towers are to be no more than 4" above top of body sides.	$304
4010-0259	950 Gallon "T" Water Tank. Includes lowered upper "T" for lower hosebed height and a large Officer's side ladder compartment tank notch upper/fwd area.	$11,807
4010-0260	Fill tower locations. The water and foam fill towers shall be re-located in the center of the hose bed pan.	$304
4010-0262	1030 Gallon half "T" Water Tank (no "T" section to officer side of tank). UPF Poly III color fill towers. Note: Any foam cell(s) and/or storage options through the tank will reduce the overall water capacity.	$8,746
4010-0266	1250 Gallon "R" Water Tank. UPF Poly III color fill towers. Note: Any foam cell(s) and/or storage options through the tank will reduce the overall water capacity.	$9,719
4010-0267	750 Gallon "R" Water Tank. UPF Poly III color fill towers. Note: Any foam cell(s) and/or storage options through the tank will reduce the overall water capacity.	$6,420
4010-0271	530 Gallon half "T" Water Tank (no "T" section to drivers side of tank). UPF Poly III color fill towers. Note: Any foam cell(s) and/or storage options through the tank will reduce the overall water capacity.	$5,869
4010-0274	1750 Gallon "T" Water Tank. UPF Poly III color fill towers. Note: total available tank capcity to be 1750 U.S. Gallons (Water, or water/foam should foams cells be added).	$14,516
4020-0001	Additional tank sump.	$328
4020-0002	Dump Valve Mounting Plate	$604
4020-0003	Jet Dump	$604
4020-0004	Newton dump mounting plate.	$575
4020-0006	Direct 1.0" Water Tank Fill with Akron Valve Terminate with .75 Hose Bib. Location: driver side pump panel	$825
4020-0009	Water fill tower to have a butterfly latch.	$190
4020-0011	Notch officer side water tank (overall tank capacity will be reduced for application). Notch to allow 2.5" rear diacharge to be routed down low to rear of unit. Discharge to be positioned towards lower area of ladder tunnel access door (height only).	$1,585
4020-0013	Sight Level Water Gauge form into front of water tank, as a part of the tank.	$208
4020-0015	Rear tank dump. Includes painted steel assembly with manually actuated valve on driver side of dump assembly. Includes integral manual extension chute.	$2,340
4020-0016	Rear tank dump. Includes stainless steel assembly with manually actuated valve on driver side of dump assembly. Includes integral manual extension chute.	$2,845
4020-0017	Rear tank dump. Includes stainless steel assembly with electical actuated valve and integral manual extension chute.	$3,675
4020-0018	Rear tank dump. Includes painted steel assembly with manual actuated valve on top of dump assembly. For use with slip on extension and chute.	$1,409
4020-0019	Rear tank dump. Includes stainless steel assembly with manually actuated valve on top of dump assembly. For use with slip on extension and chute.	$1,698
4020-0020	Rear tank dump. Includes stainless steel assembly with electrically actuated valve. For use with slip on extension and chute.	$2,522
4020-0021	Rear tank dump. Includes painted steel assembly with manually actuated valve on top of dump assembly. Includes integral swivel chute with manual telscopic extension.	$3,497
4020-0022	Rear tank dump. Includes stainless steel assembly with manually actuated valve on top of dump assembly. Includes integral swivel chute with manual extension.	$5,061
4020-0023	Rear tank dump. Includes mild finish steel assembly with manually actuated valve on driver side of dump assembly. Includes integral electric extension chute.	$3,575
4020-0024	Rear tank dump. Includes stainless finish steel assembly with electrcially actuated valve. Includes integral manual extension chute.	$3,938
4020-0025	Rear tank dump. Includes stainless steel assembly with electric actuated valve and integral electrical extension chute.	$5,064
4020-0027	Slip-on stainless steel dump extension and chute. Includes beavertail mounted removable support arm bracket and tailboard mounted storage tray (directly below dump) with retaining straps.	$1,755
4020-0028	Slip-on mild finish dump extension and chute. Includes (1) beavertail mounted removable support arm bracket and tailboard mounted storage tray (directly below dump) with retaining straps.	$1,355

4020-0029	Driver and officer side tank dumps. Includes stainless steel assembly with electrically actuated valve and integral electrical extension chute.	$8,727
4020-0030	Driver and officer side tank dumps. Includes painted steel assembly with electically actuated valve and integral electrical extension chute.	$6,391
4020-0031	Fill Tower(s) to be 24" tall due to the ROM hosebed cover and to be located 27" off front of the tank due to drum of ROM hosebed cover.	$304
4020-0032	Dealer supplied dump extension, chute, and items for storage in or on the body. To be provided by E-ONE will be (1) support arm bracket and (2) mount points on trailing end of beavertails (support arm bracket to be shipped loose).	$254
4020-0038	Rear tank dump. Includes mild finish steel assembly with manually actuated valve on top of dump assembly. Includes integral manual extension chute.	$2,340
4020-0041	Additional Dump valve/extension switching location in Cab accessible to driver.	$396
4020-0044	Slip-on stainless steel dump extension and chute. Includes body mounted removable support arm bracket and tailboard mounted storage tray (opposite side of NFPA upper access step/ladder) with retaining straps.	$1,800
4020-0045	Notch officer side water tank (overall tank capacity will be reduced for application). Notch to allow for a 2.5" hosebed discharge to be routed into the hosebed on officer side.	$427
4020-0046	Notch driver/officer side water tank (overall tank capacity will be reduced for application). Notch to allow for hosebed discharge(s) to be routed into the hosebed.	$427
4020-0047	Sight tube gauge, plastic tubing and brass valves installed on left front face of body. Wildland	$242
4020-0052	Hosebed partition "L" shape. Locate at rear of hosebed, centered side to side, extend 106" forward and taper at 90 degrees to driver hosebed side wall. Partition to be poly and integral to the tank. See photos on file.	$682
4020-0053	Tank sump box (1) each side of tank for newton dump mounting. Wetside Tanker Only.	$656
4020-0054	Rear tank dump. Includes painted steel assembly with electric actuated valve on top of dump assembly. Includes integral swivel chute with manual extension.	$5,102
4020-0056	Tank sleeve for rear or hosebed (low hosebed applications) discharge.	$280
4020-0059	Rear tank dump. Includes painted steel assembly with electrically actuated valve. For use with slip on extension and chute.	$1,982
4020-0062	Water tank fill tower to be approximately 8" tall IPOS.	$181
4020-0063	Tank sump dump box (1) each side for newton dump mounting.	$327
4020-0064	Tank sump dump box (1) at rear for newton dump mounting.	$327
4020-0065	Notch driver side water tank (overall tank capacity will be reduced for application). Notch to allow for a 2.5" hosebed discharge to be routed into the hosebed on driver side.	$427
4020-0066	Notch driver side water tank (overall tank capacity will be reduced for application). Notch to allow a booster reel to be mounted in hosebed storage pan.	$427
4020-0068	The Newton mounting plate shall be fitted with a stainless steel plate to cap the tank until the dealer supplied dump has been installed.	$280
4020-0069	Notch driver side water tank (overall tank capacity will be reduced for application). Notch to allow for (2) 1.5" hosebed discharges to be routed into the hosebed on driver side.	$427
4020-0070	Vertical "A" style sleeve thru tank for 50' boom support.	$706
4020-0072	Water Tank Notch for HOT SHOT hosebed storage pan.	$226
4020-0073	Water tank floor to be 1" thick material ipos 1/2" thick material.	$479
4020-0074	Water tank notched at forward top face. Notch along forward top face of tank for cylinders of the electric hosebed cover clearance.	$382
4020-0076	Jet Dump 2" IPO 1.5".	$636
4020-0084	4" Water Tank Overflow piping to be extended below chassis frame rails and piped so as not to discharge over rear springs, axle, or fuel tank.	$382
4100-0000	10 gallon integral foam tank for [#LOC]. Foam tank capacity will reduce the water tank capacity.	$993
4100-0006	40 gallon integral foam tank for [#LOC]. Foam tank capacity will reduce the water tank capacity. Tank capacity is 40 US gallon / 33 Imperial gallons / 151 Liters.	$1,261
4100-0007	15 gallon integral foam tank for [#LOC]. Foam tank capacity will reduce the water tank capacity. Tank capacity is 15 US gallon / 12 Imperial gallons / 56 Liters.	$1,032
4100-0008	20 gallon integral foam tank for [#LOC]. Foam tank capacity will reduce the water tank capacity. Tank capacity is 20 US gallon / 16 Imperial gallons / 75 Liters.	$1,068
4100-0009	30 gallon integral foam tank for [#LOC]. Foam tank capacity will reduce the water tank capacity. Tank capacity is 30 US gallon / 25 Imperial gallons / 113 Liters.	$1,157
4100-0012	280 gallon integral foam tank for [#LOC]. Foam tank capacity will reduce the water tank capacity. Tank capacity is 280 US gallon / 233 Imperial gallons / 1059 Liters.	$4,352
4100-0013	50 gallon integral foam tank for [#LOC]. Foam tank capacity will reduce the water tank capacity. Tank capacity is 50 US gallon / 41 Imperial gallons / 189 Liters.	$1,352
4100-0014	150 gallon integral foam tank for [#LOC]. Foam tank capacity will reduce the water tank capacity. Tank capacity is 150 US gallon / 124 Imperial gallons / 567 Liters.	$3,488
4100-0015	25 gallon integral foam tank for [#LOC]. Foam tank capacity will reduce the water tank capacity. Tank capacity is 25 US gallon / 20 Imperial gallons / 94 Liters.	$1,112
4100-0016	100 gallon integral foam tank for [#LOC]. Foam tank capacity will reduce the water tank capacity.	$2,512
4100-0017	10 gallon external foam tank. Locate in storage pan. Tower to be next to water fill tower.	$1,576
4100-0018	80 gallon integral foam tank for [#LOC]. Foam tank capacity will reduce the water tank capacity. Tank capacity is 80 US gallon / 66 Imperial gallons / 302 Liters.	$2,011
4100-0020	60 gallon integral foam tank for [#LOC]. Foam tank capacity will reduce the water tank capacity. Tank capacity is 60 US gallon / 50 Imperial gallons / 227 Liters.	$1,621
4100-0021	30 imperial gallon integral foam tank for [#LOC]. Foam tank capacity will reduce the water tank capacity.	$1,261
4100-0022	180 gallon integral foam tank for [#LOC]. Foam tank capacity will reduce the water tank capacity. Tank capacity is 180 US gallon / 149 Imperial gallons / 681 Liters.	$4,072
4100-0023	300 gallon integral foam tank for class [#LOC] foam. Foam tank capacity will reduce the water tank capacity. Tank capacity is 300 US gallon / 249 Imperial gallons / 1135 Liters.	$4,121

4100-0024	70 gallon integral foam tank for [#LOC]. Foam tank capacity will reduce the water tank capacity. Tank capacity is 70 US gallon / 58 Imperial gallons.	$1,760
4100-0025	600 gallon integral foam tank for [#LOC]. Foam tank capacity will reduce the water tank capacity. Tank capacity is 600 US gallons / 499 Imperial gallons / 2271 Liters.	$9,326
4100-0028	External foam cell, 20 gal, Poly, Black, w/Drain, Wildland	$2,304
4100-0031	250 gallon integral foam tank for [#LOC]. Foam tank capacity will reduce the water tank capacity. Tank capacity is 250 US gallon / 208 Imperial gallons / 946 Liters.	$3,887
4100-0033	30 gallon integral foam tank for [#LOC]. UPF Poly III [#COL] fill tower. Foam tank capacity will reduce the water tank capacity.	$1,157
4100-0034	10 gallon integral foam tank for [#LOC]. UPF Poly III [#COL] fill tower. Foam tank capacity will reduce the water tank capacity.	$993
4100-0035	20 gallon integral foam tank for [#LOC]. UPF Poly III [#COL] fill tower. Foam tank capacity will reduce the water tank capacity.	$1,068
4100-0036	40 gallon integral foam tank for [#LOC]. UPF Poly III [#COL] fill tower. Foam tank capacity will reduce the water tank capacity.	$1,261
4100-0037	50 gallon integral foam tank for [#LOC]. UPF Poly III [#COL] fill tower. Foam tank capacity will reduce the water tank capacity.	$1,352
4100-0038	100 gallon integral foam tank for [#LOC]. UPF Poly III [#COL] fill tower. Foam tank capacity will reduce the water tank capacity.	$2,512
4100-0052	500 Gallon integral foam tank for [#LOC]. UPF Poly III [#COL] fill tower. The fill tower shall include a an expansion dome. Foam tank capacity will reduce the water tank capacity. Tank capacity is 500 US gallons / 416 Imperial gallons / 1892 Liters.	$7,772
4100-0053	30 Gallon external foam tank for [#LOC]. UPF Poly III [#COL]. Locate in storage pan.	$3,456
4100-0055	250 Gallon integral foam tank for [#LOC]. UPF Poly III [#COL] fill tower. The fill tower shall include an expansion dome. Foam tank capacity will reduce the water tank capacity. Tank capacity is 250 US gallons / 208 Imperial gallons / 946 Liters.	$3,943
4100-0056	180 Gallon integral foam tank for [#LOC]. UPF Poly III [#COL] fill tower. The fill tower shall include an expansion dome. Foam tank capacity will reduce the water tank capacity. Tank capacity is 180 US gallons / 149 Imperial gallons / 681 Liters	$4,072
4100-0058	25 gallon integral foam tank for [#LOC]. UPF Poly III [#COL] fill tower. Foam tank capacity will reduce the water tank capacity.	$1,148
4100-0059	230 Gallon integral foam tank for [#LOC]. UPF Poly III [#COL] fill tower. The fill tower shall include an expansion dome. Foam tank capacity will reduce the water tank capacity. Tank capacity is 230 US gallons / 191 Imperial gallons / 870 Liters.	$4,352
4100-0062	Label on Foam Tank to read "Class A Foam" or "Class B Foam" as necessary.	$30
4100-0064	30 Gallon external foam tank for [#LOC]. UPF Poly III [#COL] tower to be accessible from driver side. Includes bolt-on .187" diamond plate cover with end panel (if applicable) and cutout in top panel for fill tower. Locate in storage pan over pump offset to driver side.	$1,733
4110-0002	Foam tank (B) outlet. Includes 1" male adapter and connector (ship loose). Outlet location: [#LOC].	$982
4110-0006	Foam tank outlet. Includes 1" male adaptor and connector (ship loose). Outlet location: [#LOC]	$981
4110-0011	1.5" Foam tank drain Akron manual valve.	$718
4110-0013	Foam tank outlet. Includes 1.5" MNST with cap. A 1.5" FNST fitting shall be included in the loose equipment . Outlet location: [#LOC].	$1,076
4110-0014	Foam tank (B) outlet. Includes 2" male adapter. Outlet location: [#LOC].	$1,421
4110-0015	Foam tank outlet. Includes 1" Female adaptor and connector (ship loose). Outlet location: [#LOC].	$981
	PUMP AND PLUMBING	
4000-0036	Stainless Steel Victaulic couplings for all discharge and intake plumbing.	$4,277
4005-0007	Hale Centrifugal Booster PTO Pump - 2 Stage	$17,262
4005-0011	Hale 8FG Pump 3000/3500 GPM single stage	$46,267
4005-0013	Hale QFLO 750-1250 GPM pump, single stage.	$24,007
4005-0014	Hale QMID 1250 GPM single stage Pump	$32,356
4005-0015	Hale QMAX 1000-1250 GPM single stage Pump	$28,874
4005-0016	Hale QMAX 1000-2250 GPM single stage pump.	$28,874
4005-0017	Hale QTWO 1000-1250 GPM two stage Pump	$36,470
4005-0018	Hale QTWO 1500-2000 GPM two stage pump.	$37,444
4005-0019	Waterous CS 750-1250 single stage pump.	$25,205
4005-0020	Waterous CM 750-1250 two stage Pump	$28,950
4005-0021	Waterous CSU 1500-2250 GPM single stage pump.	$28,591
4005-0022	Waterous CMU 1500-2250 GPM two stage pump.	$43,393
4005-0036	Extended Hale Pump 1 Year Warranty in addition to the standard 2 year warranty.	$753
4005-0037	Extended Hale Pump 2 Year Warranty in addition to the standard 2 year warranty.	$1,447
4005-0038	Extended Hale Pump 3 Year Warranty in addition to the standard 2 year warranty.	$2,141
4005-0039	Extended Waterous Pump 3 Year Warranty in addition to the standard 2 year warranty.	$1,820
4005-0040	Pump Portable 500 GPM Hale w/4" Tank-to-pump. Location [#LOC]	$23,124
4005-0049	Class 1 Pump/Pump Module Package. Includes the following: LED panel lights, (1) DSDM Pump, (1) Class 1 Captain Pressure Govenor, (1) Enfo IV, (1) Class 1 Intelli-tank water and foam level gauge, (1) 2.1A Foam Logix - plumbed to speedlay preconnects and front jump. (1) 2" tank fill, (1) 3" tank to pump, (1) driver and (1) officer 2.5" aux. intake, (1) driver side 2.5" and (1) 3" discharge w/integral droops, (1) officer side 3" discharge w/integral droop, officer side lower intake port for 5" front intake application w/MIV-E (E-ONE to do piping from Class 1 MIV-E to front of cab), (1) 2.5" driver side front hosebed discharge, (2) 1.5" speedlay preconnects, (1) 3" deck gun (pipe offset to driver side due to access door in pan) and (1) 1.5" front bumper discharge (swivel located on bumper to driver side). All discharge/intakes to be electric valves and controlled from inside rear of cab.	$81,785
4005-0052	Hale QMAX 1500-2250 GPM single stage Pump with K Gear Box	$29,989
4005-0054	Hale Qflo-23L 1250 pump. Tradition.	$20,070

4005-0057	Hale DSD Pump 750/1500 GPM single stage	$32,625
4005-0060	Hale HPX300 BD26 Hale Portable Pump mounted in pan. W/Remote controls in Cab. Hook up to Chassis Fuel System.	$21,077
4005-0061	Hale AP 500 MGA T-Case Driven single stage Pump.	$21,902
4005-0062	Waterous S100D (1500 GPM) single stage pump. For use with rear mount pump body.	$40,456
4005-0063	Hale QFLO Plus 750-1250 GPM Pump single stage	$44,407
4005-0079	Hale DSD Pump 750/1500 GPM single stage	$28,567
4005-0080	Hale Centrifugal CBP Booster Pump - 1/Stage w/T-CASE	$19,412
4005-0085	Hale QMAX-21L 1750 pump. Tradition.	$25,696
4005-0086	Hale RSD/RGA single stage pump. For use with rear mount pump body.	$31,028
4005-0087	Waterous S100D/TC20 single stage pump. For use with rear mount pump body.	$29,571
4005-0096	Waterous CMU 1500-2250 GPM two stage Pump	$32,404
4005-0098	Waterous Pump TPP-5 Extended Warranty.	$1,820
4005-0099	Hale Pump Pro-Tech Extended 3 Year Warranty in addition to the standard 2 year warranty.	$2,059
4005-0100	Hale AP50 PTO driven pump. Includes driver side 5" intake with cap (shipped loose). Capacity of 500GPM/1892LPM	$13,394
4005-0101	Hale MBP PTO driven pump. Includes driver side 6" intake with cap (shipped loose). Capacity of 750GPM/2839LPM.	$17,977
4005-0102	Hale MBP PTO driven pump. Includes driver side 6" intake with cap (shipped loose). Capacity of 1000GPM/3785LPM.	$17,977
4005-0122	Waterous CSU 1500-2250 GPM single stage Pump. Shall include the Endurance CSC20 Waterous, C20 transmission.	$40,016
4005-0130	Hale QFLO-PLUS 750-1250 GPM Pump single stage	$23,759
4005-0131	E-ONE 1250-1500 GPM pump, single stage.	$36,577
4005-0132	Hale AP 500 RGA T-Case Driven single stage Pump.	$21,902
4005-0133	Hale RSD single stage PTO driven pump. For use with rear mount applications only.	$22,333
4005-0134	Hale CBP 250GPM PTO pump. Plumbed for use with all discharges of the foam manifold and suction side to water tank. For use as pump and roll application with controls located in the cab. Includes pre-set discharge pressure relief valve at 125psi and (2) check valves to prevent pressurizing pumps when not engaged.	$9,560
4005-0136	Hale MBP PTO driven pump. Includes driver side 5" intake with cap (shipped loose). Capacity of 750GPM/2839LPM. For use with Wetside Tanker only.	$15,474
4005-0137	Darley 1000 to 1500 single stage, PTO driven pump.	$22,735
4005-0139	PTO pump, Darley JMP, 500 GPM, 2-stage, high pressure, option, Wildland	$26,240
4005-0140	PTO pump, Hale Qpak, 1000 GPM, base, Wildland	$36,367
4005-0141	Hale Auxiliary Portable Pump, HPX100-BD26, base, Wildland	$26,691
4005-0142	Auxiliary Portable Pump, Darley 1-1/2 AGE 26BSD, Option, Wildland	$24,059
4005-0143	Hale DSD Pump 750/1500 GPM single stage	$23,528
4005-0144	Hale AP PTO driven pump. Includes driver side 5" intake with cap (shipped loose). Capacity of 500GPM/1892LPM. For use with Wetside Tanker only.	$13,668
4005-0146	Hale MBP PTO driven pump for use with under tank mounting. Includes driver side 5" intake with cap (shipped loose). Capacity of 750GPM/2839LPM. For use with Wetside Tanker only.	$15,474
4005-0147	E-ONE 1250-1500GPM PTO pump, single stage.	$36,582
4005-0150	Hale MG Pump 500/1000 GPM single stage	$22,747
4005-0152	Hale MG Pump 500/1000 GPM single stage	$19,247
4005-0154	Hale QMAX-XS 1250-2250 GPM single stage pump.	$29,874
4005-0155	Hale RME/RGA 3000gpm Pump for Rear Mount with (3) 6" Inlets.	$40,974
4005-0157	Waterous CL PTO driven pump. Includes driver side 5" intake with cap (shipped loose). Capacity of 500GPM/1892LPM. For use with Wetside Tanker only.	$14,348
4005-0169	Hale QMAX-XS R 1250-2250 GPM single stage pump. (R GEAR BOX)	$30,523
4005-0171	Waterous CXVK 750-1250 single stage PTO Pump. On 4X4 commercials, requires PTO on top port of the transmission.	$25,105
4005-0172	Waterous CS 750-1250 single stage pump. (With gear box to front IPOS)	$28,779
4005-0176	Hale CBP 250GPM PTO HYD pump. For use as pump and roll application with controls located in the cab or via rear pump governor.	$21,505
4005-0177	Hale APH 500gpm HYD driven pump. Includes driver side 5" intake with cap (shipped loose). Capacity of 500GPM/1892LPM. For use with Wetside Tanker only.	$23,659
4005-0179	Waterous CLV 500gpm HYD driven pump. Includes driver side 5" intake with cap (shipped loose). Capacity of 500GPM/1892LPM. For use with Wetside Tanker only.	$23,659
4005-0181	Waterous CXVPA 750-1250 single stage Pump	$27,673
4005-0182	Waterous CXVK 1250 GPM single stage pump with 150CFM CAFS	$67,356
4005-0183	Waterous CPK 300GPM PTO pump. For use as pump and roll application with controls located in the cab. Includes pre-set discharge pressure relief valve at 125psi and (2) check valves to prevent pressurizing pumps when not engaged.	$10,780
4005-0184	Waterous CXS-C20C 1250-1500 GPM single stage pump for eMax configurations.	$37,874
4005-0185	Hale CBP 250 GPM PTO pump.	$10,627
4005-0187	Hale APMG50 Pump 500GPM single stage.	$16,726
4015-0002	Mechanical speed counter for Hale pumps.	$328
4015-0007	Pump cooler, 1/4" valve with 3/8" tubing.	$172
4015-0008	Zinc anodes for Hale pump (PR), (1) discharge side and (1) intake side.	$331
4015-0012	Pump shift override, side panel mounted.	$762
4015-0013	Fire Research ThrottleXcel engine throttle. Includes engine gauges.	$1,628
4015-0014	Thermal Relief Valve - Hale TRV120.	$851
4015-0015	Valve relief system, Hale TPM.	$3,807
4015-0016	Thermal relief valve, Hale TRVL-120.	$1,542
4015-0018	Valve Inlet MIV-E - Hale. Location: [#LOC].	$3,524
4015-0019	Valve inlet MIV-M, Hale. Location: [#LOC].	$3,023
4015-0020	Valve Monarch Manual - Waterous. Location: [#LOC].	$4,529

4015-0021	Valve Monarch Air Actuated - Waterous. Location: [#LOC]	$5,612
4015-0022	Mechanical pump seal - Hale.	$778
4015-0026	Electronic speed counter for Waterous pumps.	$324
4015-0029	Hale pressure relief valve.	$1,335
4015-0030	Waterous pressure relief valve.	$1,492
4015-0031	Valve Relief System - Dual TPM Required for pump rating 2250 GPM and above.	$4,505
4015-0033	Hale 2-Stage Power Operated Transfer Valve.	$1,767
4015-0035	Waterous 2-Stage electronic transfer valve.	$1,493
4015-0036	6" Additional Intake for 2250 GPM Pump.	$2,038
4015-0037	Engine throttle, vernier.	$371
4015-0039	Pump seal mechanical for Waterous pump.	$733
4015-0041	Valve Monarch Electric - Waterous. Location: [#LOC].	$5,744
4015-0042	Waterous Overheat Protection Manager.	$1,098
4015-0043	Anodes for Hale CAFSPRO Pump (Pair), (1) Discharge side and (2) Intake Side.	$497
4015-0044	Anodes for Waterous pump - (Pair) (1) discharge side and (1) intake side.	$401
4015-0045	Throttle Selection Switch on Pump Operator's Panel for Back-Up of Relief and Throttle System.	$564
4015-0046	Hale pump shift override.	$1,214
4015-0047	Additional Hale Primer Valve. Located: [#LOC].	$624
4015-0048	Pump Shift Override - driver's side under running board forward of running board tray if applicable.	$762
4015-0049	Extend Fire Pump Grease Zerks to Operator's Panel	$438
4015-0050	Relocate Primer to the Outside of the Frame Rail on Driver's Side	$97
4015-0051	Two 4.5" Steamers for Hale Qflo Pump	$777
4015-0054	Additional Waterous Primer. Located: [#LOC].	$1,399
4015-0056	Air operated master pump drain (upgrade).	$227
4015-0062	Primer indicator light shall be provided on the pump operator's panel, color to be red.	$119
4015-0063	TPM Relief Valve outlet to be extended to the side of truck under runningboard or compartment.	$294
4015-0064	Hale Auto Fill/Thief Inlet 2.5" Tank Fill "AutoFill" Automatic Tank Fill Valve Location: [#LOC].	$4,487
4015-0065	Schedule 40 stainless steel piping.	$1,240
4015-0066	Trident Pump Primer W/3 Barrel Push Button Control. (In addition to standard.)	$1,109
4015-0069	MIV's, Pressure Relief and Atmospheric Relief (intake relief) to be plumbed to top of heat pan.	$159
4015-0070	WATEROUS OIL PRIMER	$74
4015-0071	Valve Relief Thermal - Hale TRVL-120 W/Audible Alarm	$1,556
4015-0074	Manual remote operated master pump drain. The master drain control shall be clearly marked and placed in accessible location on driver side pump panel.	$333
4015-0080	6" Cap Vented "IPOS"	$18
4015-0081	Hale Semi-Automatic Priming push-button control.	$519
4015-0082	Electric Over Air Actuation Pump Cooler Valve	$451
4015-0083	Electric Over Air Actuation Engine Cooler Valve	$290
4015-0084	Pump Air Blow Out with 1/4" Snubber Valve.	$259
4015-0085	Auto Tank to Pump Operation. When Switched to Automatic Mode, The Tank Valve will Close When Suction Pressure Reaches 15 PSI & Opens When Suction PressureI Drops Below 15 PSI.	$1,906
4015-0086	Pump Cooler 1/4 Turn Valve	$271
4015-0087	Engine Cooler 1/4 Turn Valve	$271
4015-0088	Portable/Qmax Pump Shall be with Manifold and check valves for Front Bumper Turret and Ground Sweep. To be use dearing Pump&Roll operation.	$931
4015-0090	Akron Test Port for Master Gauges	$99
4015-0091	Pump cooler with .75" 1/4 turn valve.	$307
4015-0092	Hale Fill Thieft Steamers to be Flush + 2 Location [#LOC]	$1,647
4015-0109	Galvanized Victaulic Coupling. All Victaulic couplings shall galvanized.	$225
4015-0110	Valve Monarch Manual with Akron Intake Relief- Waterous. Location: [#LOC]	$3,145
4015-0111	Ferrell Compression Fittings for all Plastic Tubing in the Pump module plumbing.	$689
4015-0113	Auto Discharge Pressure Relief Valve Preset at 125psi for Pump&Roll.	$2,624
4015-0125	Red Switch Cover on Master Drain Switch.	$14
4015-0126	Hale PTO/MIDSHIP 250GPM to 1000gpm Pump Pressure Relief Valve	$2,360
4015-0127	Fire Research Infinity vernier type engine throttle.	$713
4015-0129	Waterous Overheat Protection Manager with audible alarm.	$1,032
4015-0130	Additional Trident Primer Valve, Located: [#LOC].	$374
4015-0131	Hale AnodePro Kit (3) Anodes with Flange. One on each suction tube and one anode on the discharge located as close to the center of the pump as possible.	$1,164
4015-0133	Anode for Darley pump - (1) intake side.	$433
4015-0134	Class 1 Engine Twister throttle, vernier	$901
4015-0135	Mechanical speed counter for pumps.	$399
4015-0136	Mechanical Darley pump seal.	$1,090
4015-0137	Valve Monarch Manual with Indicator lights - Waterous. Location: [#LOC].	$5,402
4015-0138	6" Inlet Valve Manual Gear Operated with Relief. Location: [#LOC].	$3,050
4015-0139	Darley Pump Overheat Thermal relief valve shall be provided with a light located on pump operator's panel.	$775
4015-0144	Manual remote operated master pump drain. The master drain control shall be clearly marked and placed in accessible location rearward below running board on driver side or L1 compartment.	$333
4015-0145	Engine cooler plumbing. For use with Navistar 7400 chassis. Wildland	$364
4015-0152	Hale pump shift override. Pump shift to be recess behind pump operator pump panel with door.	$1,476
4015-0159	Valve Inlet MIV-E - Hale. Location: [#LOC].	$3,524
4015-0164	Factory Pump Test.	$484
4015-0166	Pump cooler, automatic with 3/8" tubing. Include a check valve that is install between the pump discharge and tank that will automatically close when drafting.	$148

4015-0170	5" Additional Intake. Location: [#LOC].	$2,199
4015-0172	Primer indicator light shall be provided on the pump operator's panel, color to be red. The indicator light shall be upgraded to a LED indicator light IPOS.	$180
4015-0175	Additional control and air bleeder for the MIV-E to provide controls at: [#LOC].	$567
4015-0177	Additional Anode for Darley pump. Location: Discharge side of pump.	$433
4015-0178	Anodes for Waterous pump - (Three) (1) discharge side, (1) intake side and (1) inside of tank.	$605
4015-0179	Manual override control handle on officer's side for Waterous Monarch intake valve.	$401
4015-0181	Pump cooler with .75" 1/4 lift lever turn valve.	$307
4015-0182	Engine cooler with .75" 1/4 lift lever turn valve.	$307
4015-0183	Test Port 1/4" Drain Valve.	$82
4015-0186	Trident Pump Primer W/3 Barrel Push Button Control. (In place of standard primer.)	$214
4015-0187	Anodes Pro System for Hale pump (QTY3), (1) discharge side and (2) intake side with one on each side of intake.	$644
4015-0188	Red Switch Cover on rear dump valve switches.	$14
4015-0191	Valve Monarch Electric - Waterous. Location:Front Intake with Elkhart Relief valve.	$5,030
4015-0192	Intake adapter 6" FNST x 6" MNST for pump intake.	$323
4015-0193	Hale 3" Auto Fill w/Thief Inlet. Locate: [#LOC].	$6,535
4015-0202	Electric Over Air Actuation Pump Cooler 1" Valve.	$451
4015-0204	Trident Manually operated master pump drain. The master drain shall be clearly marked and placed in accessible location on pump panel.	$167
4015-0205	Throttle Increase/Decrease switch in cab to operate water pump.	$606
4015-0207	Thermal relief valve, Hale TRVL-120. (1) light at pump operator panel, and (1)light in cab.	$1,542
4015-0209	Hale Fluid Primer IPOS.	$142
4015-0210	Pump cooler with Innovative Control 1/4 turn valve with "T" handle and label.	$166
4015-0211	Anodes for Waterous pump - (2) at intake side.	$401
4015-0212	Trident Automatic Pump Primer.(In place of standard primer.)	$897
4015-0214	Additional Darley Primer Valve. Located: [#LOC].	$1,014
4015-0215	5" Intake Akron Hand Wheel Valve with relief. Location: drive side pump panel	$4,309
4030-0046	TFT Tornado RC Bumper Turret with Joystick. [#LOC].	$12,131
4030-0054	Bumper monitor (Elkhart Sidewinder with 30 GPM Nozzle). Includes 2" plumbing and cab mounted joystick controller with pressure gauge and mini water level gauge. Monitor to be mounted to officer side of bumper.	$9,428
4030-0059	Front bumper turret, Elkhart Sidewinder, Wildland	$13,765
4030-0060	Front bumper turret, 7100 Elkhart Sidewinder with Joystick control in cab.	$12,063
4030-0073	Front bumper turret, Akron Forestry 3462 with a 3293 low flow adjustable nozzle. Include 6035 Joystick, 2" electric valve, and quick disconnect. [#LOC].	$10,634
4405-0016	Booster hose reel for dual agent applications. Shall hold 100' x 1" twinned booster hose (hose not included) installed in [#LOC].	$5,976
4405-0017	Booster Reel. Reel to have capacity of 200' of 1" (not included). Includes (reel side) stirrup style rewind switch. Locate [#LOC].	$2,790
4405-0020	Booster Reel. Reel to have capacity of 200' of 1" (not included). Includes stirrup style rewind switch. Locate rear body compartment.	$3,003
4405-0021	Booster reel - front bumper. Center between frame rails. Will hold 100' of 1" or 150' of 3/4" booster hose.	$6,468
4405-0022	Hannay electric rewind booster reel that shall hold 250' of 1" booster hose. (Hose not included.)	$2,822
4405-0026	Booster Reel Aluminum shall hold 100' of 1" or 150' of .75" Hose Reel installed in [#LOC]. A rewind switch shall be provided at the reel.	$2,772
4405-0036	Booster Reel. Reel to have capacity of 200' of 1" (not included). Includes rewind switch on wall adjacent to reel. Locate rear upper body compartment.	$3,003
4405-0041	Booster Reel. Reel to have capacity of 200' of 1.5" (not included). Locate [#LOC].	$2,976
4405-0042	Booster Reel. Reel to have capacity of 200' of 1.5" (not included). Includes stirrup style rewind switch. Locate rear body compartment.	$3,190
4405-0043	(1) booster reel to hold up to 300' of .75" hose (not included). Includes rollers mounted on reel side of the module and foot mounted rewind switch below the rearward side of the runningboard. Locate [#LOC].	$3,423
4405-0045	Booster Reel. Reel to have capacity of 200' of 1" (not included). Locate [#LOC].	$2,790
4405-0046	Booster Reel. Reel to have capacity of 100' of 1" (not included). Includes rewind switch located on bottom of adjustable shelf on far right side corner. Locate rear body compartment offset to officer side as far as possible.	$2,772
4405-0047	Drop down booster reel mounted roller assembly. For use with rear compartment mounted booster reel.	$372
4405-0048	Booster Reel. Reel to have capacity of 200' of 1" (not included). Locate rear body compartment. Includes rewind switch on driver side wall adjacent to reel.	$3,003
4405-0052	Hose Reel Dry 300'X1.75 Hose. Locate in storage pan.	$2,505
4405-0054	Hose Reel Dry for 250' X 1.75 Collapsible Hose	$1,883
4405-0055	Booster Reel. Reel to have capacity of 150' of 1" (not included). Locate [#LOC]. Includes body/beavertail mounted rewind switch located to outboard side of reel location.	$2,790
4405-0058	Booster Reel. Reel to have capacity of 150' of 1" (not included). Locate rear body compartment.	$2,790
4405-0060	Booster reel Akron Elect valve with a 9315 controller to read pressure only- Behind Front of Cab. Center between frame rails. To hold 100' of 1"	$6,691
4405-0061	Akron Booster reel - front bumper. Center between frame rails. Will hold 150' of 1" or 250' of 3/4" booster hose.	$6,915
4405-0065	Booster Reel. Reel to have capacity of 200' of 1" with Electric Valve Control (hose not included). Locate rear body compartment.	$3,558
4405-0066	Booster Reel. Reel to have capacity of 150' of 1" (not included). Locate rear body compartment.	$2,790
4405-0075	Booster reel with 200' of .75" red hose. Locate reel in officer side forward area of hosebed mounted to the hosebed floor (no storage pan). Reel to be painted.	$2,418

4405-0077	Booster Hose Reel 12 Volt. Shall hold 200' of .75" Booster Hose (Hose not included) Includes stirrup style rewind switch installed in [#LOC]	$2,791
4405-0078	Booster Reel with 1.5" Air Actuated Valve control at operator panel. Reel to have capacity of 200' of 1" (not included). Locate rear body compartment.	$3,003
4405-0080	Booster reel, Hannay, 12VDC, capacity of 100' of 1" (hose not included), polished, Wildland	$4,210
4405-0081	Booster Reel. Reel to have capacity of 150' of 1" (not included). Locate officer side of pan.	$2,790
4405-0082	Dunnage area w/hinged cover, option, Wildland	$1,200
4405-0085	Booster Reel Riser for rollers. Locate (1) left, and (1) right side on hose reel pan.	$181
4405-0090	Booster Reel with air actuated control at pump operator panel. Shall hold 200' of 1" Booster Hose (Hose not included) installed in [#LOC]	$2,667
4405-0095	Booster Hose Reel 12 Volt located on the floor of B1. Shall hold 200' of .75" Booster Hose (Hose not included). Includes rewind switch officers side of B1 wall close to opening for easy accessability.	$2,791
4405-0096	The booster reel manual crank shall have the crank handle extended an additional 12" beyond standard length.	$100
4405-0097	Booster Reel Aluminum shall hold 200' of 1" flat lay Hose. installed in [#LOC]. A rewind switch shall be provided at the reel.	$2,772
4405-0098	Booster Reel 100' X 1" or 150' x 0.75" hose (Hose not included), blow out valve included, model EF4026-19-20-8. Located: [#LOC].	$2,786
4405-0100	Booster reel rewind switch. Switch located [#LOC].	$121
4405-0104	Booster Reel. Reel to have capacity of 100' of 1" (not included). Includes rewind switch installed in [#LOC] for Dry Chemical.	$2,772
4405-0107	Booster Reel. Reel to have capacity of 200' of 1" (not included). Includes rewind switch on wall adjacent to reel. Locate rear body compartment.	$3,003
4405-0109	Booster Reel. Reel to have capacity of 300' of .75" (not included). Locate [#LOC].	$2,790
4405-0110	Booster Reel air actuated 1.5" valve with plumbing to terminate in B1 and control at pump operator panel. For use with dealer installed booster reel and roller assembly in B1.	$1,530
4405-0113	Booster Hose Reel 12 Volt located dunnage pan offset to officer side. Shall hold 200' of .75" Booster Hose (Hose not included). Includes rewind switch officers side pump panel.	$2,791
4405-0114	Booster Reel air actuated valve. Reel to have capacity of 200' of .75" (not included). Includes rewind switch on officer side wall adjacent to reel. Locate rear body compartment.	$3,003
4405-0115	Booster Reel. Reel to have capacity of 150' of 3/4" or 100' of 1" booster hose. Hose is sold seperately. Location: [#LOC].	$2,791
4405-0117	Booster Reel. Reel to have capacity of 100' of 1" (not included). Reel installed in dunnage pan offset to driver side.	$2,772
4405-0118	Hose Reel Dry for 500" X 1" Forestry Collapsible Hose (REEL MODEL SBEPC28-23-24).	$3,090
4405-0121	Akron Booster reel - front bumper. Center between frame rails. Will hold 150' of 1" or 250' of 3/4" booster hose. Include painted black Durabak cover and skid plate	$6,915
4405-0123	Booster Reel EF26-23-24-12. Reel to have capacity of 150' of 1" Niedner, or Reeltex (hose not included). Locate driver side of pan.	$2,894
4405-0126	Hose Reel Dry for 500" X 1" Forestry Collapsible Hose (REEL MODEL SBEPC28-23-24). Located: [#LOC].	$3,090
4405-0129	Hose Reel Dry 300' of 1.75" (hose not included). Locate [#LOC].	$2,505
4405-0130	Booster Reel 100' X 1" or 150' x 0.75" hose (Hose not included), blow out valve included, model EF4126-19-20-8. Located: [#LOC].	$2,786
4415-0008	1.5" front bumper discharge Akron manual valve.	$1,616
4415-0009	1.5" Front Bumper Discharge Hale Manual Valve	$1,724
4415-0010	1.5" Front Bumper Discharge Akron Electric Valve	$3,334
4415-0011	2.5" Front Bumper Discharge Akron Electric Valve	$3,497
4415-0012	1.5" crosslay with Akron manual valve. Location: [#LOC].	$1,006
4415-0014	2.5" Left Pump Panel Discharge Akron Manual Valve. Location: [#LOC].	$1,048
4415-0015	2.5" Left Panel Discharge Hale Manual Valve. Location: [#LOC]	$1,363
4415-0016	2.5" Right Pump Panel Discharge Akron Manual Valve. Location: [#LOC].	$1,164
4415-0017	2.5" Right Pump Panel Discharge Hale Manual Valve. Location: [#LOC]	$1,478
4415-0018	2.5" left front hose bed discharge Akron manual valve.	$1,515
4415-0019	2.5" Left Front Hosebed Discharge Hale Manual Valve	$1,770
4415-0020	2.5" right front hose bed discharge Akron manual valve.	$1,515
4415-0021	2.5" Right Front Hosebed Discharge Hale Manual Valve	$1,770
4415-0022	2.5" Left Rear Discharge Akron Manual Valve. Location: [#LOC].	$1,225
4415-0023	2.5" Left Rear Discharge Hale Manual Valve Location: [#LOC]	$1,478
4415-0028	2.5" Right Rear Discharge Akron Manual Valve. Location: [#LOC].	$1,225
4415-0029	2.5" Right Rear Discharge Hale Manual Valve Location: [#LOC]	$1,478
4415-0033	3" Left Pump Panel Top mount Discharge Akron Manual Valve (Waterous pumps noted location to be forward lower port). Location: [#LOC].	$1,793
4415-0034	3" Right Pump Panel Discharge Akron Manual Valve (Waterous pumps noted location to be forward lower port). Location: [#LOC].	$1,683
4415-0035	3" Right Pump Panel Discharge Hale Manual Valve Location: [#LOC]	$2,064
4415-0036	3" Left Front Hose Bed Discharge Akron Manual Valve.	$2,199
4415-0037	3" Right Front Hose Bed Discharge Akron Manual Valve.	$2,199
4415-0038	3" Left Rear Discharge Akron Manual Valve. Location: [#LOC].	$1,892
4415-0039	3" Right Rear Discharge Akron Manual Valve. Location: [#LOC].	$1,892
4415-0041	3" Deck Gun Discharge, Akron manual valve.	$1,718
4415-0049	4" Pump Panel Discharge Hale Electric Valve Location: [#LOC]	$5,934
4415-0050	4" Pump Panel Discharge Akron Electric Valve (Waterous pumps noted location to be forward lower port). [#LOC]	$4,808
4415-0054	4" Right Pump Panel Discharge with 3" Akron Manual Valve (Waterous pumps noted location to be forward lower port). Location: [#LOC].	$1,980
4415-0055	4" Left Rear Discharge Akron Electric Valve	$5,095

4415-0057	5" Right Pump Panel Discharge with 3" Akron Manual Valve. Location: [#LOC].	$2,745
4415-0058	2.5" Crosslay Akron Manual Valve. Location: [#LOC].	$1,213
4415-0065	1.5" Double Speedlay with Akron Manual Valves.	$1,971
4415-0066	1.5" Triple Speedlay with Akron manual valve.	$3,094
4415-0067	1.5" left front hose bed preconnect Akron manual valve.	$1,048
4415-0068	1.5" right front hose bed preconnect Akron manual valve.	$1,048
4415-0071	1.5" Left Rear Discharge Akron Manual Valve. Location: [#LOC].	$1,105
4415-0072	1.5" Right Rear Discharge Akron Manual Valve. Location: [#LOC].	$1,105
4415-0073	Triple Speedlay (2) 1.5" and (1) 2.5" with Akron Manual Valve.	$4,415
4415-0085	1.5" Crosslay w/2" Akron Electric Valve Location: [#LOC]	$2,932
4415-0086	2.5" Crosslay w/Akron Electric Valve. To be located rearward of 1.5" crosslay(s) if applicable. Location: [#LOC].	$3,370
4415-0088	1.5" Crosslay w/2" Akron Electric Valve & Navigator 9305 Location: [#LOC]	$5,486
4415-0089	2.5" Crosslay w/Akron Electric Valve & Navigator 9305. To be located rearward of 1.5" crosslay(s) if applicable. Location: [#LOC]	$6,374
4415-0093	Double 1.5" Speedlay w/2" Akron Electric Valves	$5,876
4415-0094	Triple 1.5" Speedlay w/2" Akron Electric Valves	$8,947
4415-0096	Double 1.5" Speedlay w/2" Akron Electric Valves & Navigator 9305	$10,893
4415-0097	Triple 1.5" Speedlay w/2" Akron Electric Valves & Navigator 9305	$16,498
4415-0098	Triple (2) 1.5" & (1) 2.5" Speedlays w/(2) 2" & (1) 2.5" Akron Electric Valves & Navigator 9305	$18,723
4415-0099	3" Deck Gun Discharge Akron Electric Valve	$3,951
4415-0100	3" Deck Gun Discharge Akron Electric Valve & Navigator 9305	$7,034
4415-0102	1.5" Front Bumper Discharge Akron Electric Valve & Navigator 9305	$6,122
4415-0104	2.5" Front Bumper Discharge Akron Electric Valve & Navigator 9315	$7,107
4415-0106	1.5" Left Front Hosebed w/2" Akron Electric Valve	$2,999
4415-0107	2.5" Left Front Hosebed Akron Electric Valve	$3,677
4415-0108	3" Left Front Hosebed Akron Electric Valve	$4,436
4415-0109	1.5" Left Front Hosebed w/2" Akron Electric Valve & Navigator 9305	$5,553
4415-0110	2.5" Left Front Hosebed Akron Electric Valve & Navigator 9305	$6,763
4415-0111	3" Left Front Hosebed Akron Electric Valve & Navigator 9305	$7,517
4415-0115	1.5" Right Front Hosebed w/2" Akron Electric Valve	$2,999
4415-0116	2.5" Right Front Hosebed Akron Electric Valve	$3,677
4415-0117	3" Right Front Hosebed Akron Electric Valve	$4,436
4415-0118	1.5" Right Front Hosebed w/2" Akron Electric Valve & Navigator 9305	$5,553
4415-0119	2.5" Right Front Hosebed Akron Electric Valve & Navigator 9305	$6,763
4415-0120	3" Right Front Hosebed Akron Electric Valve & Navigator 9305	$7,517
4415-0124	2.5" Left Pump Panel Discharge Akron Electric Valve. Location: [#LOC]	$3,210
4415-0125	2.5" Left Pump Panel Discharge Akron Electric Valve & Navigator 9305. Location: [#LOC]	$6,297
4415-0127	2.5" Right Pump Panel Discharge Akron Electric Valve Location: [#LOC]	$3,210
4415-0128	3" Right Pump Panel Discharge Akron Electric Valve (Waterous pumps noted location to be forward lower port) Location: [#LOC]	$3,922
4415-0129	4" Right Pump Panel Discharge w/3" Akron Electric Valve (Waterous pumps noted location to be forward lower port) Location: [#LOC]	$4,218
4415-0130	5" Right Pump Panel Discharge w/3" Akron Electric Valve Location: [#LOC]	$4,981
4415-0131	2.5" Right Pump Panel Discharge Akron Electric Valve & Navigator 9305 Location: [#LOC]	$6,297
4415-0132	3" Right Pump Panel Discharge Akron Electric Valve & Navigator 9305 (Waterous pumps noted location to be forward lower port) Location: [#LOC]	$6,998
4415-0133	4" Pump Panel Discharge Akron Electric Valve & Navigator 9305 Location: [#LOC]	$8,491
4415-0134	4" Right Pump Panel Discharge w/3" Akron Electric Valve & Navigator 9305 Location: [#LOC]	$7,295
4415-0135	5" Right Pump Panel Discharge w/3" Akron Electric Valve & Navigator 9305 Location: [#LOC]	$8,060
4415-0140	1.5" Left Rear Discharge Akron Electric Valve Location: [#LOC]	$3,057
4415-0141	2.5" Left Rear Discharge Akron Electric Valve Location: [#LOC]	$3,388
4415-0142	3" Left Rear Discharge Akron Electric Valve Location: [#LOC]	$4,129
4415-0143	1.5" Left Rear Discharge Akron Electric Valve & Navigator 9305 Location: [#LOC]	$5,612
4415-0144	2.5" Left Rear Discharge Akron Electric Valve & Navigator 9305 Location: [#LOC]	$6,472
4415-0145	3" Left Rear Discharge Akron Electric Valve & Navigator 9305 Location: [#LOC]	$7,208
4415-0149	1.5" Right Rear Discharge Akron Electric Valve Location: [#LOC]	$3,057
4415-0150	2.5" Right Rear Discharge Akron Electric Valve Location: [#LOC]	$3,388
4415-0151	3" Right Rear Dicharge Akron Electric Valve Location: [#LOC]	$4,129
4415-0152	1.5" Right Rear Discharge Akron Electric Valve & Navigator 9305 Location: [#LOC]	$5,612
4415-0153	2.5" Right Rear Discharge Akron Electric Valve & Navigator 9305 Location: [#LOC]	$6,472
4415-0154	3" Right Rear Discharge Akron Electric Valve & Navigator 9305 Location: [#LOC]	$7,208
4415-0158	3" Left Panel Discharge Top Mount Akron Manual Valve w/30 Degree Droop. (Waterous pumps noted location to be forward lower port.) Location: [#LOC].	$2,120
4415-0159	3" Left Panel Discharge Top Mount Akron Electric Valve (Waterous pumps noted location to be forward lower port) Location: [#LOC]	$4,030
4415-0160	3" Left Panel Discharge Top Mount Akron Electric Valve w/30 Degree Chrome Droop (Waterous pumps noted location to be forward lower port) Location: [#LOC]	$4,359
4415-0161	2.5" Left Panel Discharge Akron Manual Valve w/30 Degree Chrome Droop. Location: [#LOC].	$1,316
4415-0162	2.5" Left Panel Discharge Akron Electric Valve w/30 Degree Chrome Droop. Location: [#LOC].	$3,480
4415-0163	2.5" Left Panel Dishcarge Akron Electric Valve & Navigator 9305 w/30 Degree Droop Location: [#LOC]	$6,566
4415-0164	2.5" Right Panel Discharge Akron Manual Valve w/30 Degree Chrome Droop. Location: [#LOC].	$1,316
4415-0165	3" Right Panel Discharge Akron Manual Valve w/30 Degree Chrome Droop. (Waterous pumps noted if location is forward of steamer use lower discharge port.) Location: [#LOC].	$2,011
4415-0166	2.5" Right Panel Discharge Akron Electric Valve w/30 Degree Chrome Droop Location: [#LOC]	$3,480
4415-0167	3" Right Panel Discharge Akron Electric Valve w/30 Degree Chrome Droop (Waterous pumps noted location to be forward lower port) Location: [#LOC]	$4,248

4415-0168	2.5" Right Panel Discharge Akron Electric Valve & Navigator 9305 w/30 Degree Droop Location: [#LOC]	$6,566
4415-0169	3" Right Panel Discharge Akron Electric Valve & Navigator 9305 w/30 Degree Droop (Waterous pumps noted location to be forward lower port) Location: [#LOC]	$7,327
4415-0179	2.5" Auxiliary Deck Gun Discharge Akron Valve for use with CAFS System.Plumbed from foam manifold and "Y" into Deck Gun pipe downstream from main Deck Gun discharge valve.	$2,039
4415-0184	3" Deck Gun Discharge Hale Manual Valve	$1,928
4415-0185	3" Left Panel Discharge w/Akron Electric Valve & 9305 Navigator for Top Mount Module (Waterous pumps noted location to be forward lower port) Location: [#LOC]	$7,110
4415-0186	3" Left Panel Discharge w/Akron Electric Valve & 9305 Navigator for Top Mount Module (Waterous pumps noted location to be forward lower port) Location: [#LOC]	$7,438
4415-0187	1.5" Crosslay with Hale Manual Valve Location: [#LOC]	$1,937
4415-0189	2.5" Crosslay with Hale Manual Valve Location: [#LOC]	$2,612
4415-0190	Double 1.5" Speedlay with Hale Manual Valve	$2,428
4415-0191	Triple 1.5" Speedlay with Hale Manual Valve	$3,777
4415-0193	Triple Speedlay (2) 1.5" and (1) 2.5" with Hale Manual Valves	$5,401
4415-0194	2.5" front bumper discharge Akron manual valve.	$1,857
4415-0195	4" Right Pump Panel Discharge with 3" Hale Manual Valve Location: [#LOC]	$2,363
4415-0196	5" Right Pump Panel Discharge with 3" Hale Manual Valve Location: [#LOC]	$3,131
4415-0197	2.5" Left Panel Discharge Hale Manual Valve with Droop. Location: [#LOC]	$1,631
4415-0198	2.5" Right Pump Panel Discharge Hale Manual Valve with droop. Location: [#LOC]	$1,744
4415-0199	3" Right Pump Panel Discharge Hale Manual Valve with Droop Location: [#LOC]	$2,385
4415-0200	1.5" Left Panel Discharge Akron Valve	$1,048
4415-0201	1.5" Right Panel Discharge Akron Valve.	$1,048
4415-0204	1.5" Crosslay with Hale Electric Valve Location: [#LOC]	$3,492
4415-0205	2.5" Crosslay with Hale Electric Valve Location: [#LOC]	$4,306
4415-0206	Double 1.5" Speedlay with Hale Electric Valve	$5,537
4415-0207	Triple 1.5" Speedlay with Hale Electric Valve	$8,440
4415-0208	Triple Speedlay (2) 1.5" and (1) 2.5" with Hale Electric Valves	$10,203
4415-0209	3" Deck Gun Discharge Hale Electric Valve	$4,254
4415-0210	2.5" Auxiliary Deck Gun Discharge Hale Valve for use with CAFS System	$4,365
4415-0211	2.5" Front Bumper Discharge Hale Manual Valve	$1,913
4415-0212	1.5" Front Bumper Discharge Hale Electric Valve	$3,279
4415-0213	2.5" Front Bumper Discharge Hale Electric Valve	$3,607
4415-0214	1.5" Left Front Hosebed Discharge Hale Manual Valve	$1,198
4415-0215	3" Left Front Hosebed Discharge Hale Manual Valve	$2,410
4415-0216	1.5" Left Front Hosebed Discharge Hale Electric Valve	$2,752
4415-0217	2.5" Left Front Hosebed Discharge Hale Electric Valve	$3,464
4415-0218	3" Left Front Hosebed Discharge Hale Electricl Valve	$4,735
4415-0219	1.5" Right Front Hosebed Discharge Hale Manual Valve	$1,198
4415-0220	3" Right Front Hosebed Discharge Hale Manual Valve	$2,410
4415-0221	1.5" Right Front Hosebed Discharge Hale Electric Valve	$2,752
4415-0222	2.5" Right Front Hosebed Discharge Hale Electric Valve	$3,464
4415-0223	3" Right Front Hosebed Discharge Hale Electric Valve	$4,735
4415-0224	1.5" Left Panel Discharge Hale Valve	$1,155
4415-0225	3" Left Pump Panel Top mount Discharge Hale Manual Valve Location: [#LOC]	$2,004
4415-0226	3" Left Pump Panel Top mount Discharge with 30 deg Droop Hale Manual Valve Location: [#LOC]	$2,324
4415-0227	2.5" Left Panel Discharge Hale Electric Valve. Location: [#LOC]	$3,056
4415-0228	2.5" Left Panel Discharge Hale Electric Valve with Droop. Location: [#LOC]	$3,322
4415-0229	3" Left Pump Panel Top mount Discharge Hale Electric Valve Location: [#LOC]	$4,330
4415-0230	3" Left Pump Panel Top mount Discharge with 30 deg Droop Hale Electric Valve Location: [#LOC]	$4,650
4415-0231	1.5" Right Panel Discharge Hale Valve	$1,155
4415-0232	2.5" Right Pump Panel Discharge Hale Electric Valve. Location: [#LOC]	$3,172
4415-0233	2.5" Right Pump Panel Discharge Hale Electric Valve with droop. Location: [#LOC]	$3,438
4415-0234	3" Right Pump Panel Discharge Hale Electric Valve Location: [#LOC]	$4,391
4415-0235	3" Right Pump Panel Discharge Hale Electric Valve with Droop Location: [#LOC]	$4,712
4415-0236	4" Right Pump Panel Discharge with 3" Hale Electric Valve Location: [#LOC]	$4,688
4415-0237	5" Right Pump Panel Discharge with 3" Hale Electric Valve Location: [#LOC]	$5,455
4415-0238	1.5" Left Rear Discharge Hale Manual Valve Location: [#LOC]	$1,215
4415-0239	3" Left Rear Discharge Hale Manual Valve Location: [#LOC]	$2,102
4415-0240	1.5" Left Rear Discharge Hale Electric Valve Location: [#LOC]	$2,770
4415-0241	2.5" Left Rear Discharge Hale Electric Valve Location: [#LOC]	$3,172
4415-0242	3" Left Rear Discharge Hale Electric Valve Location: [#LOC]	$4,429
4415-0243	1.5" Right Rear Discharge Hale Manual Valve Location: [#LOC]	$1,215
4415-0244	3" Right Rear Discharge Hale Manual Valve Location: [#LOC]	$2,102
4415-0245	1.5" Right Rear Discharge Hale Electric Valve Location: [#LOC]	$2,770
4415-0246	2.5" Right Rear Discharge Hale Electric Valve Location: [#LOC]	$3,172
4415-0247	3" Right Rear Discharge Hale Electric Valve Location: [#LOC]	$4,429
4415-0248	1.5" Crosslay Elkhart Manual Valve Location: [#LOC].	$1,063
4415-0249	2.5" Crosslay Elkhart Manual Valve. To be located rearward of 1.5" crosslay(s) if applicable. Location: [#LOC]	$1,366
4415-0250	1.5" Crosslay w/2" Elkhart Electric Valve Location: [#LOC]	$2,351
4415-0251	2.5" Crosslay w/Elkhart Electric Valve. To be located rearward of 1.5" crosslay(s) if applicable. Location: [#LOC]	$2,870
4415-0252	1.5" Double Speedlay with Elkhart Manual Valves	$2,135
4415-0253	SPDLY TRPL 1.5" ELKHART VLV	$3,339

4415-0254	Triple Speedlay (2) 1.5" and (1) 2.5" with Elkhart Manual Valves	$5,036
4415-0255	Double 1.5" Speedlay w/2" Elkhart Electric Valves	$4,706
4415-0256	Triple 1.5" Speedlay w/2" Elkhart Electric Valves	$7,195
4415-0257	Triple (2) 1.5" & (1) 2.5" Speedlay w/(2) 2" & (1) 2.5" Elkhart Electric Valves	$9,110
4415-0265	3" Deck Gun Discharge Elkhart Manual Valve w/RC-10 Controller.	$1,943
4415-0266	3" Deck Gun Discharge Elkhart Electric Valve	$3,421
4415-0267	2.5" Auxiliary Deck Gun Discharge Elkhart Valve for use with CAFS System	$2,195
4415-0268	1.5" Front Bumper Discharge Elkhart Manual Valve	$1,699
4415-0269	2.5" Front Bumper Discharge Elkhart Manual Valve	$2,013
4415-0270	1.5" Front Bumper Discharge Elkhart Electric Valve	$2,984
4415-0271	2.5" Front Bumper Discharge Elkhart Unibody Electric Valve	$3,517
4415-0272	1.5" Left Front Hosebed Preconnect Elkhart Manual Valve	$1,130
4415-0273	2.5" Left Front Hosebed Discharge Elkhart Manual Valve	$1,669
4415-0274	3" Left Front Hosebed Discharge Elkhart Manual Valve	$2,427
4415-0275	1.5" Left Front Hosebed w/2" Elkhart Electric Valve	$2,416
4415-0276	2.5" Left Front Hosebed Elkhart Electric Valve	$3,172
4415-0277	3" Left Front Hosebed Elkhart Electric Valve	$3,903
4415-0278	1.5" Right Front Hosebed Preconnect Elkhart Manual Valve	$1,130
4415-0279	2.5" Right Front Hosebed Discharge Elkhart Manual Valve	$1,669
4415-0280	3" Right Front Hosebed Discharge Elkhart Manual Valve	$2,427
4415-0281	1.5" Right Front Hosebed w/2" Elkhart Electric Valve	$2,416
4415-0282	2.5" Right Front Hosebed Elkhart Electric Valve	$3,172
4415-0283	3" Right Front Hosebed Elkhart Electric Valve	$3,903
4415-0284	1.5" Left Panel Discharge Elkhart Valve	$1,130
4415-0285	4" Pump Panel Discharge Elkhart Electric Valve (Waterous pumps noted location to be forward lower port) Location: [#LOC].	$5,016
4415-0286	5" Pump Panel Discharge with 4" Akron Electric Valve Location: [#LOC]	$5,481
4415-0287	5" Pump Panel Discharge with 4" Hale Electric Valve Location: [#LOC]	$6,566
4415-0288	5" Pump Panel Discharge with 4" Elkhart Electric Valve Location: [#LOC]	$5,689
4415-0289	2.5" Left Pump Panel Discharge Elkhart Manual Valve. Location: [#LOC]	$1,203
4415-0290	2.5" Left Panel Discharge Elkhart Manual Valve w/45 Degree Droop. Location: [#LOC].	$1,472
4415-0291	3" Left Pump Panel Top mount Discharge Elkhart Manual Valve Location: [#LOC]	$2,020
4415-0292	2.5" Left Pump Panel Discharge Elkhart Electric Valve. Location: [#LOC]	$2,708
4415-0293	2.5" Left Panel Discharge Elkhart Electric Valve w/45 Degree Droop Location: [#LOC]	$2,976
4415-0294	3" Left Panel Discharge Top Mount Elkhart Electric Valve Location: [#LOC]	$3,498
4415-0295	4" Left Pump Panel Discharge with 3" Akron Manual Valve Top Mount Controlled. (Waterous pumps noted location to be forward lower port.) Location: [#LOC].	$1,980
4415-0296	4" Left Pump Panel Discharge with 3" Hale Manual Valve Top Mount Controlled Location: [#LOC]	$2,362
4415-0297	4" Left Pump Panel Discharge with 3" Elkhart Manual Valve Top Mount Controlled (Waterous pumps noted location to be forward lower port) Location: [#LOC]	$2,205
4415-0298	1.5" Right Panel Discharge Elkhart Valve	$1,130
4415-0299	2.5" Right Pump Panel Discharge Elkhart Manual Valve. Location: [#LOC].	$1,316
4415-0300	2.5" Right Panel Discharge Elkhart Manual Valve w/45 Degree Droop. Location: [#LOC].	$1,472
4415-0301	3" Right Pump Panel Discharge Elkhart Manual Valve Location: [#LOC]	$1,910
4415-0302	4" Right Pump Panel Discharge with 3" Elkhart Manual Valve w/RC-10 Control w/lights. Location: [#LOC].	$2,205
4415-0303	5" Right Pump Panel Discharge with 3" Elkhart Manual Valve Location: [#LOC]	$2,971
4415-0304	2.5" Right Pump Panel Discharge Elkhart Electric Valve Location: [#LOC]	$2,822
4415-0305	2.5" Right Panel Discharge Elkhart Electric Valve w/45 Degree Droop Location: [#LOC]	$2,976
4415-0306	3" Right Pump Panel Discharge Elkhart Electric Valve Location: [#LOC]	$3,389
4415-0307	4" Right Pump Panel Discharge w/3" Elkhart Electric Valve (Waterous pumps noted location to be forward lower port) Location: [#LOC]	$3,686
4415-0308	5" Right Pump Panel Discharge w/3" Elkhart Electric Valve Location: [#LOC]	$4,449
4415-0309	1.5" Left Rear Discharge Elkhart Manual Valve Location: [#LOC]	$1,187
4415-0310	2.5" Left Rear Discharge Elkhart Manual Valve. Location: [#LOC].	$1,380
4415-0311	3" Left Rear Discharge Elkhart Manual Valve Location: [#LOC]	$2,118
4415-0312	1.5" Left Rear Discharge Elkhart Electric Valve Location: [#LOC]	$2,474
4415-0313	2.5" Left Rear Discharge Elkhart Electric Valve Location: [#LOC]	$2,882
4415-0314	3" Left Rear Discharge Elkhart Electric Valve Location: [#LOC]	$3,597
4415-0315	1.5" Right Rear Discharge Elkhart Manual Valve Location: [#LOC]	$1,187
4415-0316	2.5" Right Rear Discharge Elkhart Manual Valve. Location: [#LOC].	$1,380
4415-0317	3" Right Rear Discharge Elkhart Manual Valve Location: [#LOC]	$2,118
4415-0318	1.5" Right Rear Discharge Elkhart Electric Valve Location: [#LOC]	$2,474
4415-0319	2.5" Right Rear Discharge Elkhart Electric Valve Location: [#LOC]	$2,882
4415-0320	3" Right Rear Dicharge Elkhart Electric Valve Location: [#LOC]	$3,597
4415-0322	Second Left Front Hosebed Discharge 1.5" w/2" Akron Manual Valve	$1,048
4415-0323	Second left front hose bed discharge 2.5" Akron manual valve.	$1,515
4415-0324	Second Left Front Hosebed Discharge 2.5" Hale Manual Valve	$1,770
4415-0325	Second Left Front Hose Bed Discharge 3" Akron Manual Valve.	$2,199
4415-0326	Second Left Front Hosebed 1.5" w/2" Akron Electric Valve	$2,999
4415-0327	Second Left Front Hosebed 2.5" Akron Electric Valve	$3,677
4415-0328	Second Left Front Hosebed 3" Akron Electric Valve	$4,436
4415-0329	Second Left Front Hosebed 1.5" w/2" Akron Electric Valve & Navigator 9305	$5,553
4415-0330	Second Left Front Hosebed 2.5" Akron Electric Valve & Navigator 9305	$6,763
4415-0331	Second Left Front Hosebed 3" Akron Electric Valve & Navigator 9305	$7,517
4415-0335	Second Left Front Hosebed Discharge 1.5" Hale Manual Valve	$1,198
4415-0336	Second Left Front Hosebed Discharge 3" Hale Manual Valve	$2,410
4415-0337	Second Left Front Hosebed Discharge 1.5" Hale Electric Valve	$2,752

4415-0338	Second Left Front Hosebed Discharge 2.5" Hale Electric Valve	$3,464
4415-0339	Second Left Front Hosebed Discharge 3" Hale Electricl Valve	$4,735
4415-0340	Second Left Front Hosebed Preconnect 1.5" Elkhart Manual Valve	$1,130
4415-0341	Second Left Front Hosebed Discharge 2.5" Elkhart Manual Valve	$1,669
4415-0342	Second Left Front Hosebed Discharge 3" Elkhart Manual Valve	$2,427
4415-0343	Second Left Front Hosebed 1.5" w/2" Elkhart Electric Valve	$2,416
4415-0344	Second Left Front Hosebed 2.5" Elkhart Electric Valve	$3,172
4415-0345	Second Left Front Hosebed 3" Elkhart Electric Valve	$3,903
4415-0346	Second Right Front Hose Bed Preconnect 1.5" With 2" Akron Manual Valve.	$1,048
4415-0347	Second Right Front Hose Bed Discharge 2.5" Akron Manual Valve.	$1,515
4415-0348	Second Right Front Hosebed Discharge 2.5" Hale Manual Valve	$1,770
4415-0349	Second Right Front Hosebed Discharge 3" Akron Manual Valve	$2,199
4415-0350	Second Right Front Hosebed 1.5" w/2" Akron Electric Valve	$2,999
4415-0351	Second Right Front Hosebed 2.5" Akron Electric Valve	$3,677
4415-0352	Second Right Front Hosebed 3" Akron Electric Valve	$4,436
4415-0353	Second Right Front Hosebed 1.5" w/2" Akron Electric Valve & Navigator 9305	$5,553
4415-0354	Second Right Front Hosebed 2.5" Akron Electric Valve & Navigator 9305	$6,763
4415-0355	Second Right Front Hosebed 3" Akron Electric Valve & Navigator 9305	$7,517
4415-0359	Second Right Front Hosebed 1.5" Discharge Hale Manual Valve	$1,198
4415-0360	Second Right Front Hosebed Discharge 3" Hale Manual Valve	$2,410
4415-0361	Second Right Front Hosebed Discharge 1.5" w/2" Hale Electric Valve	$2,752
4415-0362	Second Right Front Hosebed Discharge 2.5" Hale Electric Valve	$3,464
4415-0363	Second Right Front Hosebed Discharge 3" Hale Electric Valve	$4,735
4415-0364	Second Right Front Hosebed Preconnect 1.5" Elkhart Manual Valve	$1,130
4415-0365	Second Right Front Hosebed Discharge 2.5" Elkhart Manual Valve	$1,669
4415-0366	Second Right Front Hosebed Discharge 3" Elkhart Unibody Manual Valve and shall terminate with a 3"FNPT X 2.5"MNST adapter.	$2,427
4415-0367	Second Right Front Hosebed 1.5" w/2" Elkhart Electric Valve	$2,416
4415-0368	Second Right Front Hosebed 2.5" Elkhart Electric Valve	$3,172
4415-0369	Second Right Front Hosebed 3" Elkhart Electric Valve	$3,903
4415-0370	Second 1.5" Front Bumper Discharge Akron Manual Valve.	$1,616
4415-0371	Second 1.5" Front Bumper Discharge Hale Manual Valve	$1,724
4415-0372	Second 1.5" Front Bumper Discharge Akron Electric Valve	$3,334
4415-0373	Second 2.5" Front Bumper Discharge Akron Electric Valve	$3,497
4415-0374	Second 1.5" Front Bumper Discharge Akron Electric Valve & Navigator 9305	$6,122
4415-0376	Second 2.5" Front Bumper Discharge Akron Electric Valve & Navigator 9305	$7,107
4415-0378	Second 2.5" Front Bumper Discharge Akron Manual Valve	$1,857
4415-0379	Second 2.5" Front Bumper Discharge Hale Manual Valve	$1,913
4415-0380	Second 1.5" Front Bumper Discharge Hale Electric Valve	$3,279
4415-0381	Second 2.5" Front Bumper Discharge Hale Electric Valve	$3,607
4415-0382	Second 1.5" Front Bumper Discharge Elkhart Manual Valve	$1,699
4415-0383	Second 2.5" Front Bumper Discharge Elkhart Manual Valve	$2,013
4415-0384	Second 1.5" Front Bumper Discharge Elkhart Electric Valve	$2,984
4415-0385	Second 2.5" Front Bumper Discharge Elkhart Electric Valve	$3,517
4415-0386	4" Right Rear Discharge 4" Akron Electric Valve.	$5,348
4415-0387	4" Left Rear Discharge Hale Electric Valve	$6,150
4415-0388	4" Left Rear Discharge Elkhart Electric Valve	$5,299
4415-0389	4" Right Rear Discharge Hale Electric Valve	$6,400
4415-0390	4" Right Rear Discharge Elkhart Electric Valve	$5,552
4415-0391	4" Deck Gun Discharge Akron Electric Valve.	$5,707
4415-0392	4" Deck Gun Discharge Hale Electric Valve	$6,759
4415-0393	4" Deck Gun Discharge Elkhart Electric Valve	$5,910
4415-0399	1.5" Crosslay w/2" Akron Valve Handwheel Control Location: [#LOC]	$2,074
4415-0400	1.5" Crosslay w/2" Elkhart Unibody Valve Handwheel Control Location: [#LOC]	$2,127
4415-0401	2.5" Crosslay w/Akron Valve Handwheel Control. To be located rearward of 1.5" crosslay(s) if applicable. Location: [#LOC]	$2,279
4415-0402	2.5" Crosslay w/Elkhart Unibody Valve Handwheel Control. To be located rearward of 1.5" crosslay(s) if applicable. Location: [#LOC]	$2,330
4415-0403	3" Deck Gun Discharge Akron Valve Handwheel Control.	$2,784
4415-0404	3" Deck Gun Discharge Elkhart Valve Handwheel Control	$2,837
4415-0405	1.5" Front Bumper Discharge Akron Valve Handwheel Control	$2,685
4415-0406	1.5" Front Bumper Discharge Elkhart Unibody Valve Handwheel Control	$2,736
4415-0407	2.5" Front Bumper Discharge Akron Valve Handwheel Control	$2,925
4415-0408	2.5" Front Bumper Discharge Elkhart Valve Handwheel Control	$2,977
4415-0409	1.5" Left Front Hosebed Preconnect AkronValve Handwheel Control	$2,115
4415-0410	1.5" Left Front Hosebed Preconnect Elkhart Valve Handwheel Control	$2,168
4415-0411	2.5" Left Front Hosebed Discharge Akron Valve Handwheel Control	$2,582
4415-0412	2.5" Left Front Hosebed Discharge Elkhart Valve Handwheel Control	$2,633
4415-0413	3" Left Front Hosebed Discharge Akron Valve Handwheel Control	$3,267
4415-0414	3" Left Front Hosebed Discharge Elkhart Valve Handwheel Control	$3,318
4415-0415	1.5" Right Front Hosebed Preconnect Akron Valve Handwheel Control	$2,115
4415-0416	1.5" Right Front Hosebed Preconnect Elkhart Valve Handwheel Control	$2,168
4415-0417	2.5" Right Front Hosebed Discharge Akron Valve Handwheel Control	$2,582
4415-0418	2.5" Right Front Hosebed Discharge Elkhart Valve Handwheel Control	$2,633
4415-0419	3" Right Front Hosebed Discharge Akron Valve Handwheel Control	$3,267
4415-0420	3" Right Front Hosebed Discharge Elkhart Valve Handwheel Control	$3,318
4415-0421	4" Pump Panel Discharge Akron Valve Handwheel Control. (Waterous pumps noted location to be forward lower port.) Location: [#LOC].	$4,022

4415-0422	4" Pump Panel Discharge Akron Valve Handwheel Control. (Waterous pumps noted location to be forward lower port.) Location: [#LOC].	$4,022
4415-0423	5" Right Pump Panel Discharge with 4" Akron Valve Handwheel Control	$4,697
4415-0424	5" Right Pump Panel Discharge with 4" Elkhart Valve Handwheel Control	$4,774
4415-0425	2.5" Right Pump Panel Discharge Akron Valve Handwheel Control. Location: [#LOC]	$2,232
4415-0426	2.5" Right Pump Panel Discharge Elkhart Valve Handwheel Control. Location: [#LOC]	$2,282
4415-0427	2.5" Right Panel Discharge Akron Valve Handwheel Control w/30 Degree Droop Location: [#LOC]	$2,384
4415-0428	2.5" Right Panel Discharge Elkhart Valve Handwheel Control w/30 Degree Droop Location: [#LOC]	$2,437
4415-0429	3" Right Pump Panel Discharge Akron Valve Handwheel Control (Waterous pumps noted location to be forward lower port). Location: [#LOC].	$2,751
4415-0430	3" Right Pump Panel Discharge Elkhart Valve Handwheel Control Location: [#LOC]	$2,802
4415-0431	3" Right Panel Discharge Akron Valve Handwheel Control w/Droop. Location:(Waterous pumps noted location to be forward lower port) [#LOC].	$3,079
4415-0432	4" Right Panel Discharge w/3" Akron Valve Handwheel Control. Location: [#LOC].	$3,048
4415-0433	4" Right Panel Dischargew/3" Elkhart Unibody Valve Handwheel Control Location: [#LOC]	$3,100
4415-0434	5" Right Pump Panel Discharge with 3" Akron Valve Handwheel Control Location: [#LOC]	$3,812
4415-0435	5" Right Pump Panel Discharge with 3" Elkhart Valve Handwheel Control Location: [#LOC]	$3,864
4415-0436	1.5" Left Rear Discharge Akron Valve Handwheel Control Location: [#LOC]	$2,173
4415-0437	1.5" Left Rear Discharge Elkhart Valve Handwheel Control Location: [#LOC]	$2,224
4415-0438	2.5" Left Rear Discharge Akron Valve Handwheel Control Location: [#LOC]	$2,293
4415-0439	2.5" Left Rear Discharge Elkhart Unibody Valve Handwheel Control Location: [#LOC]	$2,343
4415-0440	3" Left Rear Discharge Akron Valve Handwheel Control Location: [#LOC]	$2,961
4415-0441	3" Left Rear Discharge Elkhart Valve Handwheel Control Location: [#LOC]	$3,011
4415-0442	4" Left Rear Discharge Akron Valve Handwheel Control	$4,310
4415-0443	1.5" Right Rear Discharge Akron Valve Handwheel Control Location: [#LOC]	$2,173
4415-0444	1.5" Right Rear Discharge Elkhart Valve Handwheel Control Location: [#LOC]	$2,224
4415-0445	2.5" Right Rear Discharge Akron Valve Handwheel Control Location: [#LOC]	$2,293
4415-0446	2.5" Right Rear Discharge Elkhart Unibody Valve Handwheel Control Location: [#LOC]	$2,343
4415-0447	3" Right Rear Discharge Akron Valve Handwheel Control Location: [#LOC]	$2,961
4415-0448	3" Right Rear Discharge Elkhart Valve Handwheel Control Location: [#LOC]	$3,011
4415-0449	4" Right Rear Discharge Akron Valve Handwheel Control	$4,562
4415-0455	Second 1.5" Front Bumper Discharge Akron Valve Handwheel Control	$2,685
4415-0456	Second 1.5" Front Bumper Discharge Elkhart Valve Handwheel Control	$2,736
4415-0457	Second 2.5" Front Bumper Discharge Akron Valve Handwheel Control	$2,925
4415-0458	Second 2.5" Front Bumper Discharge Elkhart Valve Handwheel Control	$2,977
4415-0459	Second Left Front Hosebed Discharge 1.5" w/2" Akron Valve Handwheel Control	$2,115
4415-0460	Second Left Front Hosebed Discharge 1.5" w/2" Elkhart Valve Handwheel Control	$2,168
4415-0461	Second Left Front Hosebed Discharge 2.5" Akron Valve Handwheel Control	$2,582
4415-0462	Left Front Hosebed Discharge 2.5" Elkhart Unibody Valve Handwheel Control	$2,633
4415-0463	Second Left Front Hosebed Discharge 3" Akron Valve Handwheel Control	$3,267
4415-0464	Second Left Front Hosebed Discharge 3" Elkhart Valve Handwheel Control	$3,318
4415-0465	Second Right Front Hosebed Preconnect 1.5" Akron Valve Handwheel Control	$2,115
4415-0466	Second Right Front Hosebed Preconnect 1.5" Elkhart Valve Handwheel Control	$2,168
4415-0467	Second Right Front Hosebed Discharge 2.5" Akron Valve Handwheel Control	$2,582
4415-0468	Second Right Front Hosebed Discharge 2.5" Elkhart Valve Handwheel Control	$2,633
4415-0469	Second Right Front Hosebed Discharge 3" Akron Valve Handwheel Control	$3,267
4415-0470	Second Right Front Hosebed Discharge 3" Elkhart Valve Handwheel Control	$3,318
4415-0471	1.5" Left Discharge Akron Valve in Running Board Hose Tray, [#LOC].	$1,048
4415-0472	1.5" Left Discharge Hale Valve in Runningboard Hose Tray, [#LOC].	$1,155
4415-0473	1.5" Left Discharge Elkhart Valve in Runningboard Hose Tray, [#LOC].	$1,130
4415-0474	1.5" Right Discharge Akron Valve in Runningboard Hose Tray, [#LOC].	$1,048
4415-0475	1.5" Right Discharge Hale Valve in Runningboard Hose Tray, [#LOC].	$1,155
4415-0476	1.5" Right Discharge Elkhart Valve in Runningboard Hose Tray, [#LOC].	$1,130
4415-0477	4" Left Rear Discharge Elkhart Valve Handwheel Control	$4,389
4415-0478	4" Right Rear Discharge Elkhart Valve Handwheel Control	$4,642
4415-0484	2.5" Quad Speedlay with Akron Manual Valves.	$4,838
4415-0491	2.5" Left Panel Discharge Elkhart Manual UnibodyValve w/30 Degree Chrome Droop. Location: [#LOC].	$1,440
4415-0492	2.5" Right Panel Discharge Elkhart Manual UnibodyValve w/30 Degree Chrome Droop. Location: [#LOC].	$1,467
4415-0493	1.5" Crosslay w/2" Elkhart Unibody Manual Valve. Location: [#LOC].	$1,063
4415-0494	1.5" Crosslay w/2" Elkhart Unibody Electric Valve UBEC3 to read flow, and pressure. Location: [#LOC]	$5,164
4415-0495	2.5" Right Panel Discharge Elkhart Hand Wheel Control UnibodyValve w/30 Degree Chrome Droop Location: [#LOC]	$2,360
4415-0496	3" Deck Gun Discharge Elkhart Unibody Valve Handwheel Control	$2,738
4415-0497	4" Pump Discharge Elkhart Electric UBEC3 Valve to read flow, and pressure. Location: [#LOC]	$6,738
4415-0498	1.5" Right Rear Discharge Elkhart Electric UBEC3 Valve to read flow, and pressure. Location: [#LOC]	$5,009
4415-0499	2.5" Right Rear Discharge Elkhart Electric UBEC3 Valve to read flow, and pressure. Location: [#LOC]	$5,820
4415-0500	1.5" Front Bumper Discharge Elkhart Electric UBEC3 Valve to read flow, and pressure.	$5,311
4415-0502	1.5" Front Bumper Discharge Akron Manual Valve without Blowout	$1,616
4415-0504	2.5" Right Panel Discharge Elkhart Manual UnibodyValve Location: [#LOC]	$1,344
4415-0505	2.5" Left Panel Discharge Elkhart Manual UnibodyValve Location: [#LOC]	$1,315
4415-0506	2.5" Right Panel Discharge Elkhart Hand Wheel Control UnibodyValve Location: [#LOC]	$2,238

4415-0510	1.5"/2.5" Double Speedlay with Akron Manual Valves Lower 1.75 speedlay and upper 2.5 speedlay.	$2,405
4415-0511	1.5" Right Panel Discharge Akron Valve Hand Wheel Control	$2,328
4415-0514	4" Officer side discharge. Foward of steamer and includes 30 degree droop, 4" Elkhart Elect Control full flow valve.	$5,196
4415-0515	Front jumpline swivel to be recess so WYE valve will clear rise lid and tray.	$171
4415-0516	4" Right Panel Discharge w/ 3" Akron Valve Handwheel Control w/Droop Location: [#LOC]	$3,384
4415-0517	4" Right Pump Panel Discharge with 3" Akron Manual Valve w/Droop. Location: [#LOC].	$2,308
4415-0518	4" Right Panel Discharge w/ 3" Akron Valve Electric w/Droop (Waterous pumps noted location to be forward lower port) Location: [#LOC]	$4,546
4415-0519	4" Right Pump Panel Discharge w/3" Akron Electric Valve & Navigator 9305 with 30 Degree Droop Location: [#LOC]	$7,624
4415-0520	4" Right Pump Panel Discharge with 3" Hale Manual Valve with 30 Degree Droop Location: [#LOC]	$2,691
4415-0521	4" Right Pump Panel Discharge with 3" Hale Electric Valve with 30 Degree Droop Location: [#LOC]	$5,016
4415-0523	5" Right Panel Discharge w/4" Elkhart Electric UBEC3 Valve to read flow, and pressure. Location: [#LOC]	$7,035
4415-0524	3" Deck Gun Discharge Elkhart Unibody Manual Valve.	$1,936
4415-0525	1.5" Front Bumper Discharge Elkhart Unibody Manual Valve.	$1,699
4415-0526	Triple Speedlay (2) 1.5" and (1) 2.5" with Elkhart Unibody Manual Valves	$5,036
4415-0527	1.5" Crosslay w/2" Elkhart Electric Unibody UBEC1 Valve Location: [#LOC]	$2,932
4415-0528	2.5" Left Pump Panel Discharge Elkhart Unibody Electric Valve. Location: [#LOC]	$3,210
4415-0529	3" Right Pump Panel Discharge Elkhart Unibody Electric Valve Location: [#LOC]	$3,922
4415-0530	4" Pump Panel Discharge Elkhart UBEC1 Electric Valve (Waterous pumps noted location to be forward lower port). Location: [#LOC].	$4,808
4415-0531	4" Pump Panel Discharge Akron Electric Valve with 30 Degree Droop (Waterous pumps noted location to be forward lower port) Location: [#LOC]	$5,120
4415-0536	5" Right Pump Panel Discharge with 4" Akron Valve Handwheel Control. Location: [#LOC].	$4,041
4415-0537	2.5" Crosslay Elkhart Unibody Manual Valve. To be located rearward of 1.5" crosslay(s) if applicable. Location: [#LOC]	$1,427
4415-0538	1.5" Double Speedlay with Elkhart Unibody Manual Valves	$2,023
4415-0540	Triple Speedlay (2) 1.5" and (1) 2.5" with Elkhart Unibody Manual Valves	$4,522
4415-0541	3" Deck Gun Discharge Elkhart Unibody Manual Valve.	$1,826
4415-0542	Second 1.5" Front Bumper Discharge Elkhart Unibody Manual Valve	$1,699
4415-0543	3" Right Pump Panel Discharge Akron Manual Swing Valve (Waterous pumps noted location to be forward lower port) Location: [#LOC]	$1,936
4415-0545	5" Pump Panel Discharge with 4" Elkhart UBEC1 Electric Valve Location: [#LOC]	$5,689
4415-0547	2.5" Front Bumper Discharge Elkhart Unibody Manual Valve	$2,013
4415-0549	1.5" Front Bumper Discharge Elkhart Electric UBEC1 Valve	$3,431
4415-0550	2.5" Double Speedlay with Akron Manual Valves	$2,421
4415-0551	2.5" Right Front Hosebed Discharge Akron Manual Valve. Locate offset 11.5" from officer side hosebed side.	$1,515
4415-0552	1.5" Front Bumper Crosslay Discharge Akron Manual Valve.	$2,269
4415-0553	2.5" Left Front Hosebed Discharge Akron Manual Valve located outlet shall be located 13.625" from inside hosebed wall.	$1,515
4415-0554	1.5" Triple Speedlay with Akron Valve Hand Wheel Control.	$6,802
4415-0555	3" Deck Gun Discharge Akron Manual Valve with no Plumbing from the valve to deck gun channel Dealer to install Extend-A-Gun and Plumbing from the valve to the channel..	$1,595
4415-0557	2.5" Left Rear Discharge Elkhart Unibody Manual Valve Location: [#LOC].	$1,380
4415-0558	2.5" Right Rear Discharge Elkhart Unibody Manual Valve Location: [#LOC].	$1,380
4415-0559	5" Right Pump Panel Discharge with 4" Elkhart Unibody Valve Handwheel Control Location: [#LOC]	$4,305
4415-0561	2.5" Left Panel Discharge Akron Electric Valve w/30 Degree Droop Location: [#LOC]	$3,480
4415-0562	3" Right Pump Panel Discharge Akron Electric Valve w/30degree Droop (Waterous pumps noted location to be forward lower port) Location: [#LOC]	$4,101
4415-0563	2.5" Right Panel Discharge Akron Electric Valve w/30 Degree Droop Location: [#LOC]	$3,480
4415-0564	3" Right Pump Panel Discharge Elkhart Electric Valve w/30degree Droop Location: [#LOC]	$4,101
4415-0566	1.5" crosslay w/2" Akron electric valve. Location: [#LOC].	$2,932
4415-0567	2.5" Crosslay w/Akron Electric Valve. To be located rearward of 1.5" crosslay(s) if applicable. Location: [#LOC].	$3,370
4415-0568	3" deck gun discharge Akron electric valve.	$3,951
4415-0569	4" deck gun discharge Akron electric valve.	$5,707
4415-0570	1.5" Front Bumper Discharge Akron Electric Valve.	$3,334
4415-0571	Second 1.5" Front Bumper Discharge Akron Electric Valve	$3,334
4415-0572	2.5" Front Bumper Discharge Akron Electric Valve	$3,497
4415-0573	Second 2.5" Front Bumper Discharge Akron Electric Valve	$3,497
4415-0574	2.5" Left Pump Panel Discharge Akron Electric Valve. Location: [#LOC].	$3,210
4415-0575	2.5" Left Panel Discharge Akron Electric Valve w/30 Degree Droop. Location: [#LOC].	$3,210
4415-0576	4" Pump Panel Discharge Akron Electric Valve. (Waterous pumps noted location to be forward lower port.) Location: [#LOC].	$4,808
4415-0577	5" Pump Panel Discharge with 4" Akron Electric Valve. Location: [#LOC].	$5,481
4415-0578	1.5" Left Rear Discharge Akron Electric Valve Location: [#LOC]	$3,057
4415-0579	2.5" Left Rear Discharge Akron Electric Valve. Location: [#LOC].	$3,388
4415-0580	3" Left Rear Discharge Akron Electric Valve. Location: [#LOC].	$4,129
4415-0581	4" Left Rear Discharge Akron Electric Valve.	$5,095
4415-0582	1.5" Right Rear Discharge Akron Electric Valve Location: [#LOC]	$3,057
4415-0583	2.5" Right Rear Discharge Akron Electric Valve. Location: [#LOC].	$3,388

4415-0584	3" Right Rear Dicharge Akron Electric Valve Location: [#LOC]	$4,129
4415-0585	4" Right Rear Discharge Akron Electric Valve.	$5,348
4415-0586	2.5" Right Pump Panel Discharge Akron Electric Valve. Location: [#LOC].	$3,210
4415-0587	3" Right Pump Panel Discharge Akron Electric Valve. Location: [#LOC].	$3,922
4415-0588	4" Right Pump Panel Discharge w/3" Akron Electric Valve (Waterous pumps noted location to be forward lower port) Location: [#LOC]	$4,218
4415-0589	5" Right Pump Panel Discharge w/3" Akron Electric Valve. Location: [#LOC].	$4,981
4415-0590	2.5" Right Panel Discharge Akron Electric Valve w/30 Degree Droop. Location: [#LOC].	$3,480
4415-0591	3" Right Panel Discharge Akron Electric Valve w/30 Degree Droop (Waterous pumps noted location to be forward lower port). Location: [#LOC].	$4,248
4415-0592	4" Right Panel Discharge w/3" Akron valve electric w/droop (Waterous pumps noted location to be forward lower port). Location: [#LOC].	$4,546
4415-0593	3" Right Pump Panel Discharge Akron Electric Valve w/30degree Droop (Waterous pumps noted location to be forward lower port) Location: [#LOC]	$4,101
4415-0594	2.5" Right Panel Discharge Akron Electric Valve w/30 Degree Droop Location: [#LOC]	$3,480
4415-0595	1.5" Left Front Hosebed w/2" Akron Electric Valve	$2,999
4415-0596	2.5" Left Front Hose Bed Akron Electric Valve.	$3,677
4415-0597	3" Left Front Hose Bed Akron Electric Valve.	$4,436
4415-0598	Second Left Front Hosebed 1.5" w/2" Akron Electric Valve	$2,999
4415-0599	Second Left Front Hosebed 2.5" Akron Electric Valve	$3,677
4415-0600	Second Left Front Hosebed 3" Akron Electric Valve	$4,436
4415-0601	1.5" Crosslay w/2" Akron Electric Valve Location: [#LOC]	$2,932
4415-0602	1.5" Right Front Hosebed w/2" Akron Electric Valve	$2,999
4415-0603	2.5" Right Front Hose Bed Akron Electric Valve.	$3,677
4415-0604	3" Right Front Hose Bed Akron Electric Valve.	$4,436
4415-0605	Second Right Front Hosebed 1.5" w/2" Akron Electric Valve	$2,999
4415-0606	Second Right Front Hosebed 2.5" Akron Electric Valve	$3,677
4415-0607	Second Right Front Hosebed 3" Akron Electric Valve	$4,436
4415-0608	Double 1.5" Speedlay w/2" Akron Electric Valves.	$5,876
4415-0609	Triple 1.5" Speedlay w/2" Akron Electric Valves	$8,947
4415-0610	Triple (2) 1.5" & (1) 2.5" Speedlay w/(2) 2" & (1) 2.5" Akron Electric Valves	$10,782
4415-0611	Triple (2) 1.5" & (1) 2.5" Speedlay w/(2) 2" & (1) 2.5" Akron Electric Valves	$10,782
4415-0614	3" Left Panel Discharge Top Mount Akron Electric Valve Location: [#LOC]	$4,030
4415-0615	3" Left Panel Discharge Top Mount Akron Electric Valve w/30 Degree Droop (Waterous pumps noted location to be forward lower port) Location: [#LOC]	$4,359
4415-0616	Third Right Front Hosebed Discharge 2.5" Akron Manual Valve.	$1,515
4415-0617	2.5" Left Panel Discharge Akron Manual 3" Valve w/30 Degree Droop. Location: [#LOC].	$1,683
4415-0618	2.5" Auxillary Deck Gun Discharge Manual Valve. Plumbed from foam manifold and "Y" into Deck Gun pipe downstream from main Deck Gun discharge valve.	$1,179
4415-0619	4" Right Pump Panel Discharge with 3" Akron Manual Valve. The 4" NST threads shall be a integral part of the valve. (Waterous pumps noted location to be forward lower port.) Location: [#LOC].	$1,980
4415-0620	3" Right Rear Discharge Elkhart Unibody Manual Valve Location: [#LOC]	$2,118
4415-0621	3" Left Front Hosebed Discharge Elkhart Unibody Manual Valve	$2,427
4415-0622	3" Right Front Hosebed Discharge Elkhart Unibody Manual Valve	$2,427
4415-0623	3" Left Rear Discharge Elkhart Unibody Manual Valve Location: [#LOC]	$2,118
4415-0627	3" Deck Gun Discharge Elkhart Electric Unibody UBEC3Valve to read flow, and pressure.	$6,050
4415-0628	5" Pump Panel Discharge Elkhart Electric UBEC3 Valve to read flow, and pressure. Location; [#LOC]	$6,340
4415-0629	2.5" Right Rear Discharge Elkhart Unibody Manual Valve Location: [#LOC]	$1,380
4415-0630	4" Left Pump Panel Discharge w/3" Akron Electric Valve (Waterous pumps noted location to be forward lower port) Location: [#LOC]	$4,218
4415-0631	4" Rear Discharge w/4" Akron Valve Handwheel Control for Rear Mount. The 4" NST 30 degree Adapter shall be a integral part of the valve.	$4,250
4415-0632	1.5" Left Front Hose Bed Preconnect Elkhart Unibody Manual Valve.	$1,130
4415-0633	1.5" Right Front Hosebed Preconnect Elkhart Unibody Manual Valve	$1,130
4415-0634	Second Left Front Hosebed Discharge 2.5" Elkhart Unibody Manual Valve	$1,669
4415-0635	Second Right Front Hosebed Discharge 2.5" Elkhart Unibody Manual Valve	$1,669
4415-0636	4" Right Pump Panel Discharge with 3" Elkhart Unibody Manual Valve. (Waterous pumps noted location to be forward lower port.) Location: [#LOC].	$2,205
4415-0637	Second Left Front Hosebed Discharge 3" w/ 3" Elkhart Unibody Manual Valve and shall terminate with a 3"FNPT X 2.5"MNST adapter.	$2,427
4415-0638	Second Right Front Hosebed Discharge 2.5" w/3" Elkhart Unibody Manual Valve and shall terminate with a 3"FNPT X 2.5"MNST adapter.	$2,427
4415-0642	2.5" rear preconnect with crosslay style swivel. For use with rear mount pump application. Includes Akron manual valve with controller located on pump operator panel. Locate: [#LOC].	$2,110
4415-0659	2.5" Left Pump Panel Discharge Elkhart Unibody Electric Valve with Droop. Location: [#LOC]	$3,342
4415-0660	2.5" Right Panel Discharge Elkhart Unibody Electric Valve w/Droop Location: [#LOC]	$3,341
4415-0661	4" Right Pump Panel Discharge w/3" Elkhart Electric Unibody Valve (Waterous pumps noted location to be forward lower port) Location: [#LOC]	$3,786
4415-0662	3" Deck Gun Discharge Elkhart Electric Unibody Valve	$3,951
4415-0665	1.5" Front Bumper Discharge Akron Electric Valve & Navigator 9315	$6,122
4415-0666	Triple (2) 1.5" & (1) 2.5" Speedlays w/(2) 2" & (1) 2.5" Akron Electric Valves & Navigator 9315	$18,723
4415-0667	2.5" Left Panel Dishcarge Akron Electric Valve & Navigator 9315 w/30 Degree Droop Location: [#LOC]	$5,906
4415-0668	2.5" Right Panel Discharge Akron Electric Valve & Navigator 9315 w/30 Degree Droop Location: [#LOC]	$5,906
4415-0669	2.5" Left Rear Discharge Akron Electric Valve & Navigator 9315 Location: [#LOC]	$6,472

4415-0670	3" Right Panel Discharge Akron Electric Valve & Navigator 9315 w/30 Degree Droop (Waterous pumps noted location to be forward lower port) Location: [#LOC]	$6,881
4415-0671	1.5" double speedlays with Akron manual valves. Each outlet connection shall terminate externally (no swivels) on the side of the module just below the speedlay.	$1,971
4415-0672	1.5" Triple Speedlay with Akron Manual Valve. Each outlet connection shall terminate externally (no swivels) on the side of the module just below the speedlay.	$3,094
4415-0673	Triple Speedlay (2) 1.5" and (1) 2.5" with Akron Manual Valve. Each outlet connection shall terminate externally (no swivels) on the side of the module just below the speedlay.	$4,415
4415-0674	1.5" Double Speedlay with Elkhart Manual Valves. Each outlet connection shall terminate externally (no swivels) on the side of the module just below the speedlay.	$2,135
4415-0675	1.5" Triple Speedlay Elkhart Manual Valves. Each outlet connection shall terminate externally (no swivels) on the side of the module just below the speedlay.	$3,339
4415-0676	Triple Speedlay (2) 1.5" and (1) 2.5" with Elkhart Manual Valves. Each outlet connection shall terminate externally (no swivels) on the side of the module just below the speedlay.	$5,036
4415-0677	1.5" Front Bumper Discharge Akron Electric Valve. For use with rear mount pump. Includes air blow-out with control on pump operator panel.	$2,543
4415-0678	1.5" front bumper discharge with Akron manual valve. For use with rear mount pump. Includes air blow-out with control on pump operator panel.	$1,556
4415-0679	1.5" front bumper discharge with Elkhart unibody manual valve. For use with rear mount pump. Includes air blow-out with control on pump operator panel.	$1,485
4415-0680	1.5" front bumper discharge with Elkhart unibody electric valve. For use with rear mount pump. Includes air blow-out with control on pump operator panel.	$2,543
4415-0681	2.5" front bumper discharge with Akron manual valve. For use with rear mount pump. Includes air blow-out with control on pump operator panel.	$1,838
4415-0682	2.5" front bumper discharge with Elkhart unibody manual valve. For use with rear mount pump. Includes air blow-out with control on pump operator panel.	$1,838
4415-0683	2.5" Front Bumper Discharge Akron Electric Valve. For use with rear mount pump. Includes air blow-out with control on pump operator panel.	$3,027
4415-0684	2.5" front bumper discharge with Elkhart unibody electric valve. For use with rear mount pump.	$3,027
4415-0687	2.5" rear panel discharge with Akron manual valve. For use with rear mount pump. Location [#LOC].	$1,288
4415-0688	2.5" rear panel discharge with Elkhart unibody manual valve. For use with rear mount pump. Location [#LOC].	$1,288
4415-0689	3" rear panel discharge with Akron manual valve. For use with rear mount pump. Location [#LOC].	$1,553
4415-0690	3" rear panel discharge with Elkhart unibody manual valve. For use with rear mount pump. Location [#LOC].	$1,553
4415-0691	3" rear panel discharge with Elkhart unibody electric valve. For use with rear mount pump. Location [#LOC].	$3,276
4415-0692	3" rear panel discharge with Akron electric valve. For use with rear mount pump. Location [#LOC].	$3,276
4415-0694	4" rear panel discharge with 3" Akron manual valve. For use with rear mount pump. Location [#LOC].	$1,573
4415-0695	4" rear panel discharge with 3" Elkhart unibody electric valve. For use with rear mount pump. Location [#LOC].	$2,874
4415-0696	4" rear panel discharge with 3" Akron electric valve. For use with rear mount pump. Location [#LOC].	$2,874
4415-0697	4" rear panel discharge with 4" Akron electric valve. For use with rear mount pump. Location [#LOC].	$3,872
4415-0698	4" rear panel discharge with 4" Elkhart unibody electric valve. For use with rear mount pump. Location [#LOC].	$3,872
4415-0699	5" rear panel discharge with 4" Akron electric valve. For use with rear mount pump. Location [#LOC].	$5,481
4415-0700	5" rear panel discharge with 4" Elkhart unibody electric valve. For use with rear mount pump. Location [#LOC].	$5,481
4415-0703	1.5" preconnect discharge with Elkhart unibody manual valve. Includes swivel style connection. Location [#LOC].	$1,190
4415-0704	2.5" preconnect discharge with Elkhart unibody manual valve. Includes swivel style connection. Location [#LOC].	$1,421
4415-0705	2.5" preconnect discharge with Akron electricl valve. Includes swivel style connection. Location [#LOC].	$2,708
4415-0706	2.5" preconnect discharge with Elkhart unibody electricl valve. Includes swivel style connection. Location [#LOC].	$2,708
4415-0707	1.5" preconnect discharge with Akron electric valve. Includes swivel style connection. Location [#LOC].	$2,636
4415-0708	1.5" preconnect discharge with Elkhart unibody electric valve. Includes swivel style connection. Location [#LOC].	$3,198
4415-0709	3" Deck gun discharge with Akron manual valve. For use with rear mount pump and for forward body area. Location [#LOC].	$2,345
4415-0713	3" Deck gun discharge with Akron manual valve. For use with rear mount pump and for rearward body/pump module area. Location [#LOC].	$1,402
4415-0718	1.5" Single Speedlay with Akron Manual Valves.	$1,068
4415-0719	3" Deck Gun Discharge Akron Electric Valve & Navigator 9315	$7,034
4415-0720	4" Right Pump Panel Discharge w/3" Akron Electric Valve & Navigator 9315 (Waterous pumps noted location to be forward lower port) Location: [#LOC]	$7,295
4415-0721	Quad Speedlay (3) 1.5" / (1) 2.5" with Akron Manual Valves. Located inside transverse compartment.	$3,282

4415-0722	3" Deck Gun Discharge Akron Electric Valve with a 9315 valve controller with pressure reading only. [#LOC]	$4,399
4415-0723	4" Discharge Akron Electric Valve & Navigator 9315 (Waterous pumps noted location to be forward lower port). Location: [#LOC].	$8,491
4415-0724	4" Rear Mount Discharge w/3" Akron 9315 Electric Valve to read Flow and Pressure with 30 degree droop (Waterous pumps noted location to be forward lower port) Location: [#LOC]	$7,295
4415-0725	4" Rear Mount Discharge w/3" Akron 9315 Electric Valve to read Pressure (Waterous pumps noted location to be forward lower port) Location: [#LOC]	$4,163
4415-0726	1.5" Front Bumper Discharge Akron Electric Valve & Navigator 9315 with Pressue Reading only.	$3,734
4415-0727	1.5" Crosslay w/2" Akron Electric Valve & Navigator 9315 to Read Pressure only Location: [#LOC]	$3,475
4415-0728	2.5" Rear Mount Discharge Akron Electric Valve & Navigator 9315 to Read Pressure only. Location: [#LOC]	$3,645
4415-0730	2.5" Left Rear Discharge UBEC3 Electric Valve to read flow, and pressure. Location: [#LOC]	$5,820
4415-0731	2.5" Left Pump Panel Discharge UBEC3 Electric Valve with 30 degree droop to read flow, and pressure. Location: [#LOC]	$5,787
4415-0732	2.5" Right Pump Panel Discharge UBEC3 Electric Valve with 30 degree droop to read flow, and pressure. Location: [#LOC]	$5,787
4415-0733	4.5" Right Pump Panel Discharge with 3" Akron Manual Valve w/Droop Location: right side discharge 1 [#LOC]	$2,510
4415-0735	3" Left Hosebed Akron Electric Valve located Driver side rear below hosebed.	$4,436
4415-0736	3" Right Hosebed Akron Electric Valve located Officer side rear below hosebed.	$4,436
4415-0739	3" Right Pump Panel Discharge Elkhart Electric Valve w/30degree Droop to Terminate with 2.5" MNST w/cap Location: [#LOC]	$4,101
4415-0740	2.5" preconnect discharge with Akron manual valve. With swivel style connection. Location: [#LOC].	$1,421
4415-0742	2.5" rear panel discharge with Akron electric valve. For use with rear mount pump. Location [#LOC].	$3,081
4415-0743	2.5" rear panel discharge with Elkhart unibody electric valve. For use with rear mount pump. Location [#LOC].	$3,081
4415-0744	2.5" Crosslay w/2.5" Akron Electric Valve & Navigator 9315 to Read Pressure only Location: [#LOC]	$4,027
4415-0746	2.5" Right Panel Discharge Akron Electric 9315 Navigator Valve w/30 Degree Droop to Read Pressure only Location: [#LOC]	$4,000
4415-0747	4" Pump Panel Discharge Akron Electric Navigator 9315 Valve (Read Pressure only) Location: [#LOC]	$5,266
4415-0749	4" rear panel discharge with 4" Akron manual valve with handwheel. For use with rear mount pump. Location [#LOC].	$3,294
4415-0751	2.5" Crosslay Elkhart UBEC3 Electric Valve to read flow, and pressure.. To be located rearward of 1.5" crosslay(s) if applicable. Location: [#LOC]	$5,655
4415-0753	Second Left Front Hosebed Preconnect 1.5" Elkhart Unibody Manual Valve	$1,130
4415-0754	Left Front Hose Bed Discharge 2.5" Elkhart Unibody Manual Valve.	$1,669
4415-0755	Right Front Hosebed Discharge 2.5" Elkhart Unibody Manual Valve	$1,669
4415-0756	Second 1.5" Right Front Hosebed Preconnect Elkhart Unibody Manual Valve	$1,130
4415-0757	1.5" Front Bumper Discharge Elkhart Electric UBEC3 Valve to read flow, and pressure.	$5,561
4415-0758	Left Front Hosebed Discharge 2.5" Elkhart Unibody UBEC3 Valve to read flow, and pressure.	$5,746
4415-0759	Right Front Hosebed Discharge 2.5" Elkhart Unibody UBEC3 Valve to read flow, and pressure.	$5,746
4415-0760	2.5" Front Bumper Discharge Akron Manual Valve without Blowout.	$1,857
4415-0761	4" Officer panel discharge w/ 3" Akron electric valve. Location: [#LOC]	$3,784
4415-0762	4" Pump Panel Discharge Akron Electric Valve with 30 Degree Droop. Location: [#LOC].	$5,120
4415-0767	2.5" Right Panel Discharge Akron Manual 3" Valve w/30 Degree Droop Location: [#LOC]	$1,683
4415-0768	2.5" Crosslay w/Akron Electric Valve & Navigator 9315. To be located rearward of 1.5" crosslay(s) if applicable. Location: [#LOC]	$6,374
4415-0769	Double 1.5" Speedlay w/2" Akron Electric Valves & Navigator 9315	$10,893
4415-0770	2.5" Right Front Hosebed Akron Electric Valve & Navigator 9315	$6,763
4415-0771	4" Deck Gun Discharge Akron Electric Valve & Navigator 9315	$7,131
4415-0772	4" Deck Gun Discharge Elkhart Electric Unibody Valve	$5,910
4415-0773	2.5" Right Pump Panel Discharge w/3" Elkhart Electric Unibody Valve and 30degree Droop [#LOC]	$4,101
4415-0774	3" Right Front Hosebed Elkhart Electric Unibody Valve	$3,903
4415-0775	3" Left Front Hosebed Elkhart Electric Unibody Valve	$3,903
4415-0776	2.5" Left Pump Panel Discharge w/3" Elkhart Electric Unibody Valve and 30degree Droop [#LOC]	$4,101
4415-0777	2.5" Left Panel Discharge 3" Akron Electric 9315 Navigator Valve w/30 Degree Droop to Read Pressure and Flow Location: [#LOC]	$5,939
4415-0778	2.5" Crosslay w/Akron 3" Electric Valve & Navigator 9315 include 3" plumbing. To be located rearward of 1.5" crosslay(s) if applicable. Location: [#LOC]	$6,596
4415-0779	2.5" Left Rear Discharge with Akron Navigator 9315 3" Electric Valve and 3" Piping Location: [#LOC]	$7,517
4415-0780	2.5" Right Front Hosebed Include Akron 3" Electric Valve & 9315 NavigatorControler w/3" Plumbing.	$7,517
4415-0781	3" Right Pump Panel Discharge UBEC3 Electric Valve with 30 degree droop to read flow, and pressure. Location: [#LOC]	$6,881
4415-0782	2.5" Left Front Hosebed Include Akron 3" Electric Valve & 9315 NavigatorControler w/3" Plumbing. To terminate at the left front of the hosebed.	$7,517
4415-0783	Double 2.5" Speedlay w/Akron Navigator 9315 3" Electric Valve Controller. Include 3" piping and to terminate with a 2.5" brass swivel.	$13,191
4415-0805	5" Left Pump Panel Discharge W/4" Akron Electric Navigator 9315 valve and controller. Include valve position display pressure and flow meter. [#LOC]	$8,572

4415-0806	5" Right Pump Panel Discharge W/4" Akron Electric Navigator 9315 valve and controller. Include valve position display pressure and flow meter. [#LOC]	$8,572
4415-0807	Dual Ground Sweep Nozzles 50 GPM. Locate at front (1) left and (1) right sides control at operator panel.	$1,637
4415-0808	2.5" Left Rear Discharge w/3" Akron Manual Valve. Include 3" plumbing to terminate with 2.5" threads.Location: [#LOC]	$1,892
4415-0811	Akron 2.5" foam system discharge with swing handle. For use with Williams Advent or Hot Shot foam systems. Locate to [#LOC].	$1,159
4415-0847	Akron 635 Swivel with turning vane Located on Top of Bumper officer's side of center tray for Front Bumper Discharge	$175
4415-0848	4" Left Pump Panel Discharge with 3" Elkhart Unibody Manual Valve (Waterous pumps noted location to be forward lower port) Location: [#LOC]	$2,205
4415-0849	5" Pump Panel Discharge 4" Akron Electric Valve & Navigator 9315 (Waterous pumps noted location to be forward lower port) Location: [#LOC]	$8,083
4415-0854	3" Left Rear Discharge Elkhart Electric Unibody Valve Location: [#LOC]	$3,557
4415-0855	3" Right Rear Discharge Elkhart Electric Unibody Valve Location: [#LOC]	$3,557
4415-0857	2" preconnect discharge with Akron 2" manual valve. For use with rear mount pump and includes swivel style connection. Location: [#LOC].	$1,456
4415-0858	Triple speedlay with (1) 1.5" and (1) 2.5" in lower storage area and (1) 1.5" in upper storage area. All with Akron manual valves.	$3,577
4415-0859	Triple speedlay with (1) 1.5" and (1) 2.5" in lower storage area and (1) 1.5" in upper storage area. All with Elkhart Unibody manual valves.	$3,691
4415-0860	Plumbing package, Akron, base, Wildland	$9,808
4415-0861	Preconnect valve, Akron, 2", option, Wildland	$1,443
4415-0863	Discharge, Left rear, 2" Akron, control at valve, base, Wildland	$1,080
4415-0864	Discharge, Left rear, 2.5" Akron, control at valve, option, Wildland	$1,174
4415-0865	Discharge, Right rear, 2" Akron, control at valve, option, Wildland	$1,080
4415-0866	Discharge, Right rear, 2.5" Akron, control at valve, option, Wildland	$1,172
4415-0867	Direct tank fill, Right rear, 2" Akron, control at valve, base, Wildland	$700
4415-0868	Preconnect valves, Akron, 1.5", base, Wildland	$1,443
4415-0869	Preconnect crosslay valve, Akron, 2", option, Wildland	$2,156
4415-0870	Right front bumper discharge valve, Akron, 2", option, Wildland	$765
4415-0871	Front bumper discharge valve, Akron, 2", electric, option, Wildland	$1,340
4415-0875	Pair of 1.5" preconnect discharges with Akron manual valves. For use with narrow Wetside tank with driver side compartment top pre-connect storage. Plumbing to terminate with 1.5" MNST threads.	$2,295
4415-0877	2.5" Crosslay Elkhart UBEC1 Electric Valve. To be located rearward of 1.5" crosslay(s) if applicable. Location: [#LOC]	$2,870
4415-0878	2.5" Right Panel Discharge Elkhart Unibody Electric Valve. Location: [#LOC]	$3,229
4415-0880	2.5" Left Panel Discharge with Elkhart Unibody Manual 3" Valve and 30 Degree Droop Location: [#LOC]	$1,683
4415-0881	2.5" Right Panel Discharge Elkhart Unibody Manual 3" Valve w/30 Degree Droop Location: [#LOC]	$1,683
4415-0882	2.5" preconnect discharge with Akron 3" manual valve and 3" plumbing reduce to a 2.5" at the swivel. For use on rear mount pump. Includes swivel style connection. Location: driver side under hosebed (outboard).	$1,979
4415-0887	Triple speedlay with (1) 1.5" and (1) 2.5" in lower storage area and (1) 1.5" in upper storage area. All with Akron electric valves.	$9,110
4415-0888	2.5" Left Pump Panel Discharge UBEC3 Electric Valve to read flow, and pressure. Location: [#LOC]	$5,259
4415-0889	2.5" Front Bumper Discharge Elkhart Electric UBEC3 Valve to read flow, and pressure.	$5,780
4415-0892	3" Front Bumper Discharge Akron Manual Valve. Location; 3" front bumper discharge piped through the center of the center front bumper tray and to come out thru the front bumper. Piping to have a cover plate in tray.	$3,825
4415-0897	2.5" Right Rear Discharge Elkhart Electric Unibody Valve Location: [#LOC]	$2,881
4415-0898	2.5" Left Rear Discharge Elkhart Unibody Electric Valve Location: [#LOC]	$3,210
4415-0899	4" Waterway Discharge with 3" Elkhart Unibody Manual Valve	$2,561
4415-0903	1.5" Front Bumper Crosslay Discharge Akron Manual Valve	$2,377
4415-0904	2" front bumper discharge Elkhart Electric valve. Include Elkhart electric valve, plumbing, and harness from the valve to joystick control located in cab console. Discharge to terminate and capped off just below the center of the bumper for dealer supplied and installed joystick, and bumper turret.	$2,491
4415-0905	Akron 1.5" foam system discharge with swing handle. For use with Williams Advent or Hot Shot foam systems. Locate to [#LOC].	$942
4415-0908	2.5" Rear Mount Discharge Akron Electric Valve & Navigator 9315 to Read Pressure only w/30 Degree Droop. Location: [#LOC]	$3,769
4415-0910	2.5" hose bed discharge Akron manual valve [#LOC].	$1,515
4415-0911	Double 1.5" Speedlay w/2" Akron Electric Valves & Navigator 9315 to read Pressure only.	$6,947
4415-0912	Second Left Front Hosebed 3" Elkhart Unibody manual Valve	$2,426
4415-0916	4" Deck Gun Discharge Akron Valve Handwheel Control.	$4,722
4415-0918	1.5" Front Bumper Crosslay Discharge Elkhart Unibody Manual Valve	$2,269
4415-0919	Deck gun monitor 3" Gemini manual hand wheel model 34700011 and nozzle 2.5" NH Excel model 51471000.	$3,583
4415-0920	Left Front Hosebed Discharge 2.5" Elkhart Unibody UBEC1 Valve.	$3,171
4415-0921	Right Front Hosebed Discharge 2.5" Elkhart Unibody UBEC1 Valve.	$3,171
4415-0923	4" Right Pump Panel Discharge with 3" Akron Manual Valve. Include a 4"FNST swivel x 4"MNST 30 degree droop adapter, and cap. Location: [#LOC].	$2,308
4415-0924	2.5" Single Speedlay with Akron manual valve located at lower storage area offset to rear.	$1,354

4415-0925	All Discharge/Intake caps, and plug to be Kochek brand and Powder coated. Color; White.	$614
4415-0926	1.5"/2.5" Double Speedlay with Akron Manual Valves, upper 1.75" speedlay and lower 2.5" speedlay.	$2,405
4415-0929	2.5" Right Front Hosebed Akron Electric Valve & Pro Navigator 9325 controller with pressue read out.	$4,413
4415-0930	2.5" Left Front Hosebed Akron Electric Valve & Pro Navigator 9325 controller with pressue read out.	$4,413
4415-0931	2.5" Front Bumper Discharge Akron Electric Valve & Navigator Pro Controller 9325 with pressure read out.	$4,237
4415-0932	Double 1.5" Speedlay w/2" Akron Electric Valves & Navigator Pro 9325 with Pressure read out.	$7,387
4415-0933	2.5" Right Panel Discharge Akron Electric Valve & Navigator Pro 9325 controller w/30 Degree Droop to Read Pressure. Location: [#LOC]	$4,222
4415-0934	2.5" Left Panel Discharge Akron Electric Valve & Navigator Pro 9325 controller w/30 Degree Droop to Read Pressure. Location: [#LOC]	$3,958
4415-0935	4" Right Pump Panel Discharge w/3" Akron Electric Valve & Navigator Pro 9325 with Pressure read out. (Waterous pumps noted location to be forward lower port) Location: [#LOC]	$5,261
4415-0936	4" Pump Panel Discharge Akron Electric Valve & Navigator 9325 to read flow, and pressure w/30 degree droop. (Waterous pumps noted location to be forward lower port). Location: [#LOC].	$6,077
4415-0937	3" Deck Gun Discharge Akron Electric Valve & Navigator read flow, and pressure with 9325 controller.	$5,420
4415-0938	2.5" Left Pump Panel Discharge Akron Manual Valve. The discharge shall extend out beyond the pump panel w/Chrome plated finish. Location: [#LOC].	$1,182
4415-0939	2.5" Right Pump Panel Discharge Akron Manual Valve. The discharge shall extend out beyond the pump panel w/Chrome plated finish. Location: [#LOC].	$1,182
4415-0940	3" Right Pump Panel Discharge Akron Manual Valve. The discharge shall extend out beyond the pump panel w/Chrome plated finish. (Waterous pumps noted location to be forward lower port). Location: [#LOC].	$1,817
4415-0941	4" Right Pump Panel Storz Discharge with 3" Akron Manual Valve. Include 3" FNST X 4" Storz 30 degree elbow adapter with cap. (Waterous pumps noted location to be forward lower port). Location: [#LOC].	$2,522
4415-0942	Left Rear Discharge 2.5" Elkhart Unibody electric valve with UICS-2 CAFS Controller.	$4,497
4415-0943	3" Deck Gun Discharge Akron Electric Valve & Navigator with 9323 controller.	$3,972
4415-0944	3" Right Panel Discharge Akron Electric Valve & Navigator 9325 w/30 Degree Droop (Waterous pumps noted location to be forward lower port) Location: [#LOC]	$5,384
4415-0945	1.5" Front Bumper Discharge Elkhart Electric Valve with UICS-2 CAFS Controller.	$4,756
4415-0946	1.5" Crosslay w/2" Elkhart Electric Unibody Valve with UICS-2 CAFS Controller. Location: [#LOC].	$4,257
4415-0947	2.5" Right Panel Discharge Elkhart Unibody Electric Valve w/Droop, and include UICS-2 CAFS Controller. Location: [#LOC].	$4,666
4415-0948	Preconnect extension (Each). The front hosebed preconnect to be extended to the rear of the hosebed area. Includes smooth plate cover. Location: [#LOC].	$486
4415-0954	1.5" Front Bumper Discharge Akron Electric Valve & Navigator 9325 controller to read flow, and pressure..	$5,878
4415-0955	3" Deck Gun Discharge Akron Electric Valve with 9325 Navigator Controller to read flow, and pressure.	$6,025
4415-0956	4" Right Rear Discharge Akron Electric Valve with 9325 Navigatorcontroller to read flow, and pressure. [#LOC].	$7,968
4415-0963	One (1) pre-connect 1.5" adaptation to Storz. The pre-connect extension hose shall include an adapter to Storz and the pre-connect nozzle (sold separately in loose equipment) shall be supplied with a Storz adapter.	$199
4415-0964	Triple speedlay with (2) 1.5" in lower storage area and (1) 2.5" in upper storage area. All with Akron manual valves.	$3,577
4415-0965	Left Front Hosebed Discharge 3" Akron Manual Valve and shall terminate with a 3"FNPT X 2.5"MNST adapter.	$2,214
4415-0966	Right Front Hosebed Discharge 3" Akron Manual Valve and shall terminate with a 3"FNPT X 2.5"MNST adapter.	$2,214
4415-0967	1.5" Crosslay w/2.5" Akron Manual Valve and plumbing. Include 2.5" FNST X 1.5" MNST adapter. Location: [#LOC].	$1,227
4415-0969	2.5" left front hose bed discharge Akron manual valve. Locate discharge(s) approximately 26" up from hosebed floor.	$1,817
4415-0970	5" Right Pump Panel Discharge with 3" Akron Manual Valve w/Droop. Include a 3"FNST swivel x 5"Storz adapter, and a 5"Storz x 4" Storz with cap. Location: [#LOC].	$2,638
4415-0972	4" Right Pump Panel Storz Discharge with 4" Akron Electric Valve. Include 4" FNST X 4" Storz 30 degree elbow adapter with cap. (Waterous pumps noted location to be forward lower port). Location: [#LOC].	$4,987
4415-0973	5" Right Pump Panel Storz Discharge with 3" Akron Manual Valve. Include 3" FNST X 5" Storz 30 degree elbow adapter with cap. (Waterous pumps noted location to be forward lower port). Location: [#LOC].	$2,638
4415-0975	2.5" Front Bumper Crosslay Discharge Akron Electric Valve.	$3,497
4415-0977	2.5" Front Bumper Crosslay Discharge Akron Manual Valve.	$2,596
4415-0986	4" Right Pump Panel Discharge w/4" Akron Electric Valve with 9323 controller. (Waterous pumps noted location to be forward lower port) Location: [#LOC]	$4,910
4415-0987	3" Right Front Hosebed Elkhart Electric Unibody Valve. Termnate with a 3"FNPT X 2.5" MNST.	$3,903
4415-0988	3" Left Front Hosebed Elkhart Electric Unibody Valve. Termnate with a 3"FNPT X 2.5" MNST.	$3,903
4415-0989	Left Front Hosebed Discharge 3" w/ 3" Elkhart Unibody Manual Valve and shall terminate with a 3"FNPT X 2.5"MNST adapter.	$2,427
4415-0991	4" Pump Panel Discharge Akron Electric Valve & Navigator 9325 to read flow, and pressure. (Waterous pumps noted location to be forward lower port). Location: [#LOC].	$5,869

4415-0992	4" Pump Panel Discharge Akron Electric Valve & Navigator 9325 (Waterous pumps noted location to be forward lower port). Location:Left Side Discharge 1.	$8,507
4415-0993	3" Left Rear Discharge Akron Electric Valve with 9323 controller. Location: [#LOC].	$4,129
4415-0996	1.5" Front Bumper Discharge Akron Electric Valve with 9323 controller.	$3,334
4415-0998	4" Left Pump Panel Discharge w/3" Akron Electric Valve with 9323 controller (Waterous pumps noted location to be forward lower port) Location: [#LOC]	$4,218
4415-0999	4" Right Pump Panel Discharge w/3" Akron Electric Valve, and 9323 controller. (Waterous pumps noted location to be forward lower port) Location: [#LOC]	$4,218
4415-1000	Double 1.5" Speedlay w/2" Elkhart Electric Unibody Valve with UICS-2 CAFS Controllers.	$7,356
4415-1001	4" Right Panel Discharge w/30 Degree Droop. Include 4" Akron Electric Valve w/9323 Controller. (Waterous pumps noted location to be forward lower port) Location: [#LOC]	$5,128
4415-1003	1.5" Front Bumper Crosslay Discharge Elkhart Unibody Valve with hand wheel control.	$3,066
4415-1004	1.5" Double Speedlay with Elkhart Unibody Valves with hand wheel controls.	$4,513
4415-1005	2.5" Left Panel Discharge Elkhart Hand Wheel Control UnibodyValve w/30 Degree Droop Location: [#LOC]	$2,359
4415-1010	3" Right Panel Discharge Akron Electric Valve and 9323 Controller w/30 Degree Droop. (Waterous pumps noted location to be forward lower port). Location: [#LOC].	$4,141
4415-1011	3" Right Pump Panel Discharge Akron Electric Valve. Location: [#LOC].	$3,921
4415-1012	3" Right Front Hosebed Akron Electric Valve with 9323 controller.	$4,435
4415-1015	3" Right Pump Panel Discharge Akron Electric Valve with 9323 controller. Location: [#LOC].	$3,921
4415-1017	2.5" Front Bumper Discharge Akron Electric Valve with 9323 controller.	$3,497
4415-1018	2.5" Left Front Hose Bed Akron Electric Valve with 9323 controller.	$3,677
4415-1019	2.5" Right Front Hose Bed Akron Electric Valve with 9323 controller.	$3,677
4415-1020	Double 1.5" Speedlay w/2" Akron Electric Valves with 9323 controllers.	$5,876
4415-1024	4" Right Pump Panel Discharge w/3" Akron Electric Valve, and 9323 controller include 30 degree droop. (Waterous pumps noted location to be forward lower port) Location: [#LOC]	$4,545
4415-1025	5" Right Pump Panel Discharge w/3" Akron Electric Valve. Location: [#LOC].	$4,981
4415-1026	5" Pump Panel Discharge with 4" Akron Electric Valve with 9323 controller. Location: [#LOC].	$5,481
4415-1027	2.5" Front Bumper Discharge Akron Manual Valve. Location; 2.5" front bumper discharge officer side through center of the officer side front bumper.	$1,953
4415-1032	3" Left Panel Discharge Top Mount Akron Electric Valve with 9323 controller. Location: [#LOC]	$4,030
4415-1033	3" Left Panel Discharge Top Mount Akron Electric Valve w/9323 controller, and 30 Degree Droop (Waterous pumps noted location to be forward lower port) Location: [#LOC]	$4,359
4415-1034	Triple Speedlay (1) 2.5" and (2) 1.5" with Akron Manual Valve. 2.5" in top location in bed number 1.	$4,245
4415-1036	2.5" Right Pump Panel Discharge Akron Manual Valve to be used with Wetside - under tank design only. Location: [#LOC].	$2,328
4415-1038	2.5" Right Pump Panel Discharge Akron Electric Valve to be used on Wetside with under tank design only. Location: [#LOC].	$4,410
4415-1039	Double Speedlay (2) 1.5" and Crosslay (1) 2.5" with Akron Manual Valve.	$4,415
4415-1040	1.5" Crosslay w/2.5" Elkart Unibody Manual Valve and plumbing Location: [#LOC]	$1,227
4415-1041	4" Pump Panel Discharge w/3" Akron Electric Valve & Navigator 9325 to read flow, and pressure. (Waterous pumps noted location to be forward lower port). Location: [#LOC].	$5,488
4415-1042	2.5" Single Speedlay with Akron manual valve outlet to terminate below speedlay tray.	$1,234
4415-1043	3" Deck Gun Discharge Elkhart Electric Unibody valve UBEC2 to pressure.	$4,674
4415-1044	3" Right Pump Panel Discharge UBEC2 Electric Valve with 30 degree droop to read pressure. Location: [#LOC]	$4,580
4415-1045	Preconnect extension (Each). The front hosebed preconnect to be extended to the rear of the hosebed area. Includes smooth plate cover. Location: second officer side hose bed preconnect is to treminate approx 10" from back edge of hosebed.	$419
4415-1048	3" Rear panel discharge with Akron electric valve and 9323 controller. For use with rear mount pump. Location [#LOC].	$3,276
4417-0000	Ground Sweep Nozzle	$1,542
4417-0001	Dual Ground Sweep Nozzles 50 GPM	$1,637
4417-0019	Fire Shop Bezel Chrome - Side Discharge/Intake	$99
4417-0020	Deck Gun Remote TFT 18" Extend-A-Gun, electric, 3" plumbing.	$4,137
4417-0021	Deck Gun Remote Ext-a-Gun 4"	$4,718
4417-0026	Automatic drain valve. For: [#LOC].	$83
4417-0030	Monitor Akron 3578 Electric 2000.	$10,226
4417-0031	Monitor Akron 3570 Manual 2000	$3,750
4417-0032	Monitor Scorpion wireless RF radio 2000 GPM	$11,476
4417-0034	Deck gun TFT 18" Extend-A-Gun, 3".	$2,064
4417-0039	Akron DeckMaster 3440 electric 1250 GPM monitor w/stow.	$11,914
4417-0040	Akron 5177 Akromatic 2.5" master stream nozzle for an Akron 3440 DeckMaster monitor.	$1,819
4417-0041	Akron 1577 SaberMaster 2.5" Nozzle for an Akron 3440 DeckMaster monitor.	$3,478
4417-0042	An Akron tether remote control kit with a 30`cable shall be provided for an Akron 3440 monitor. Plug for the remote control to be located: [#LOC].	$1,155
4417-0043	Task Force Hurricane RC electric 1250 GPM monitor.	$13,413
4417-0044	Task Force M-ERP-NJ 2.5" master stream electric nozzle for a Hurricane RC monitor.	$2,013
4417-0045	Elkhart Stinger 8297-25 Manual 800gpm Monitor w/portable base and adapter to mount to deck gun discharge or extend-a-gun	$3,325
4417-0046	Elkhart 8500 Vulcan RF monitor with panel mounted and hand held remote controls w/adapter to mount to deck gun discharge or extender.	$6,630
4417-0047	Elkhart SM-1250E Select-O-Matic 2.5" electric nozzle.	$2,517
4417-0048	Elkhart 8598 Electrically Actuated Extender.	$3,011
4417-0051	Thread Type: All 1.5" discharges to be NPSH threads. All 2.5" inlets and discharges to be CSA (Ontario) threads as an integral part of the valve.	$659

4417-0052	Extend Specified Hosebed Preconnect up to top of hosebed. Top of preconnect to be below top of hosebed. Location: [#LOC]	$421
4417-0054	Preconnect extension (Each). The front hosebed preconnect to be extended to the rear of the hosebed area. Includes smooth plate cover. Location: [#LOC]	$419
4417-0055	Superior style cable controls for top mount.	$206
4417-0057	Ferrell Compression Fittings for all Discharge and Intake Bleeder Lines	$636
4417-0059	Extend Specified Hosebed Preconnect up to mid-point of hosebed. Center of preconnect to be approximately center of hosebed height. Location: [#LOC]	$317
4417-0060	Driver and Officer side 2.5" discharge droops are to swivel.	$308
4417-0061	All 2.5" discharge(s) to have male New York Corp threads (includes integral or adaptor droops).	$108
4417-0062	Class 1 Cable Style Controls for Top Mount Discharges and Intakes.	$137
4417-0067	Monitor 4" TFT Monsoon Manual with TFT Master Stream 2000 gpm manual Nozzle.	$6,688
4417-0068	TFT Tether Kit with 30' Cable for an TFT Monitor Location: [#LOC]	$803
4417-0073	Deck Gun TFT 12" Extend-A-Gun 3".	$2,064
4417-0075	Monitor 4" TFT Monsoon Electric with TFT Master Stream 2000 gpm electric Nozzle. Include panel mount and hand held Remote.	$15,103
4417-0078	Thread Type: All 1.5" discharges to be NPSH threads. All 2.5" inlets and discharges to be (Western Canada Fire Underwriters Association) threads as an integral part of the valve.	$856
4417-0079	9304 Akron Navitgator electric valve control. Location: All electric discharge valves IPOS.	$621
4417-0080	All 1.5" Threads to be IPT threads	$72
4417-0081	Vented caps and plugs for all discharges/intakes.	$604
4417-0082	Deck Gun Remote 12" Extend-A-Gun 3" Plumbing.	$4,137
4417-0083	Elkhart 8297F Stinger RF Monitor with Panel Mounted and Hand-Held Remote Controls w/adapter to mount to deck gun discharge or extender	$9,435
4417-0084	Task Force M-ERP-NJ 2.5" Masterstream Electric Nozzle for a Hurricane RC Monitor	$2,013
4417-0085	Thread Type: All 1.5" discharges to be NPSH threads.	$330
4417-0086	Task Force Typhoon RC Electric Monitor with 1500gpm nozzle. Include Radio Remote Control	$14,137
4417-0088	Bleeder drain valve plumbed to: [#LOC].	$120
4417-0090	Additional control for deck gun electric valve locate adjacent to the outlet.	$1,792
4417-0092	Task Force Typhoon RC Electric Monitor without nozzle. Include Radio Remote Control (Require Nozzle)	$11,347
4417-0097	Innovative Controls Push/Pull Valve Control Handles IPOS.	$52
4417-0099	Akron Wireless Deck Gun Remote Monitor Controller.	$1,653
4417-0100	Akron 3600 Wireless Remote Control.	$1,774
4417-0102	Akron DeckMaster 3440 Electric 1250gpm Monitor w/Stow. With 30' Tether controller located in pump panel operator compartment.	$12,534
4417-0115	Monitor 4" TFT Monsoon Electric with hand held Remote. Require Nozzle	$13,048
4417-0116	Task Force 3.5" Masterstream Electric Nozzle for a Monsoon RC Monitor.	$2,543
4417-0119	Task Force Hurricane RC Electric Monitor with a Master Stream 1250 GPM nozzle. Includes wireless Radio Remote Control.	$12,555
4417-0120	Adapter Chrome Reducer 2.5"FNST x 1.5"MNST w/Cap. [#LOC].	$99
4417-0125	Deck gun TFT 18" Extend-A-Gun, 3". (MODEL XG18VL-XL) for crossfire monitor.	$2,064
4417-0127	Chrome discharge elbow 3"FNST x 2.5"MNST 30 Deg [#LOC].	$264
4417-0129	Left side 2.5" pump panel discharges on Waterous pump to be side by side. For use with Side Mount Pump Module.	$839
4417-0130	Task Force Tip Hurricane XFI-PLNJ Manual Monitor with MST-4NJ-2.5"NH Quad Stack Tips and M-R1000-NJ Automatic Nozzle.	$3,803
4417-0135	Addition Automatic drain valve. For: front bumper discharge. Loction under front bumper at lowest point.	$83
4417-0138	Officer side pump panel shall have polished stainless steel split escutcheon plates mounted in place for each discharge/intake. The escutcheon plates will be fastened in place to allow quick disassembly to permit the hinge to operate.	$250
4417-0140	Crosslay 1 valve control to electric 9313 comtroller.	$1,916
4417-0149	Akron DeckMaster 3440 electric 1250 GPM monitor w/stow package. Include 1577 SaberMaster 2.5" Nozzle, and 3600 Wireless Remote Control. (DND OF CANADA)	$14,859
4417-0150	Manual override access hole to be supplied in officer's side pump panel to access the override on the 4" discharge .Wrench required for manual override shall be located in vicinity of access panel.	$87
4417-0153	Elkhart Cobra EXM monitor with panel mounted and hand-held remote controls w/adapter to mount to deck gun discharge or extender. Include SM-1250E nozzle	$11,544
4417-0154	Additional electric controller for discharge electric valve locate adjacent to the outlet. Locate.[#LOC].	$1,792
4417-0158	Deck Gun Discharge piping shall be extended flush with top of booster reels.	$268
4417-0162	Akron DeckMaster 3440 UII CAN electric 1250 GPM monitor w/stow.	$11,914
4417-0163	Additional control for deck gun valve handwheel control locate adjacent to the outlet.	$1,488
4417-0166	Monitor 3" TFT Monsoon Electric with TFT Master Stream 1500 gpm electric Nozzle. Include panel mount and hand held Remote.	$11,836
4417-0171	Deck Gun Pipe. The piping for the deck gun shall terminate with a 4 bolt flange.	$169
4417-0173	Undertruck rear spray bar and spray nozzle. One nozzle each end of spray bar with Elect/Air actuated valves.	$3,445
4417-0174	CAFS Compressor "auto on".	$140
4417-0178	Task Force Tip Hurricane Manual Monitor XFIH-D61A, female NPT thread for use with Manual Extend-a-gun.	$1,625
4417-0179	Task Force 2.5 Master Stream 1250 Series M-R1250-NJ Manual Nozzle	$1,430
4417-0180	Task Force Tip Hurricane XFIH- Manual Monitor with MST-4NJ-2.5"NH Quad Stack Tips and M-R1250-NJ Automatic Nozzle.	$3,803
4417-0182	TM Valve controls to be Innovative Controls T-handles with grip activitated lock.	$46
4417-0183	Monitor Scorpion 8294-02 Monitor w/2000gpm Nozzle.	$9,238

4417-0184	TM Valve controls to be Innovative Controls T-handles with grip activitated lock and cable actuators.	$170
4417-0185	Innovative Controls discharge and intake bezels with integral color code and verbiage for side mount pump panel.	$502
4417-0186	Innovative Controls discharge and intake bezels with color code and verbiage for top mount pump panel.	$323
4417-0188	TM Valve controls to be Innovative Controls Twist-Lock handles.	$46
4417-0190	TM Valve controls to be Innovative Controls Twist-Lock handles with cable actuators.	$170
4417-0191	Ground Sweep Nozzle 20gpm. One each side under the front bumper with quick disconnect. Includes individual valve control for each.	$1,958
4417-0192	Innovative Controls discharge and intake bezels with integral color code and verbiage for rear mount pump panel.	$344
4417-0193	Extend Driver Hosebed up 16" from hosebed floor.	$421
4420-0007	Dry Chemical Tube 16 Pounds per Second Available on Units with Air Aspirating Roof Turrets Or Akron 300 Bumper Turret.	$2,831
4420-0012	Dry Chemical System 500 lbs	$11,955
4420-0031	Dry Chemical System 200 lbs locate B-1 compartment.	$18,693
4420-0033	Williams Dry Chem Vac-U-Loader	$1,305
4420-0036	Dry Chemical System. Includes a (1) 750lbs dry chemical vessel, (1) nitrogen bottles with racks-(1) driver side rear.	$10,397
4430-0008	Advent 30 Foam System for a Single Foam Tank	$20,777
4430-0009	Advent 60 Foam System for a Single Foam Tank	$24,700
4430-0010	Advent 120 Foam System A and B Type	$31,679
4430-0011	1600 Rockwood Around The Pump Foam System	$4,363
4430-0013	Williams 1500 Around-The-Pump foam system.	$7,403
4430-0014	Hale 2.1A FoamLogix foam system.	$7,354
4430-0015	Hale 3.3 FoamLogix foam system.	$15,623
4430-0016	5.0 Hale FoamLogix Foam System.	$17,613
4430-0017	400 Rockwood around the pump foam system.	$3,286
4430-0018	1600 Hypro/FoamPro foam system.	$8,531
4430-0019	2001 Hypro/FoamPro foam system.	$13,855
4430-0020	2002 Hypro/FoamPro foam system.	$17,660
4430-0022	Hot Shot II 150 Foam System.	$53,242
4430-0031	Eclipse Compressed Air Foam System 1000 GPM Manifold w/2002 FoamPro.	$82,428
4430-0032	CAFSPRO with 2.1 Foam Logix Compressed Air Foam System with 750gpm Manifold	$49,156
4430-0039	Eclipse Compressed Air Foam System 500 GPM Manifold w/2001 FoamPro	$76,863
4430-0041	WATP 500 A/B Foam System Include 1.5" Foam pick up.	$10,125
4430-0042	Advent 12 Foam System for a Single Foam Tank	$20,562
4430-0043	Advent 12 Dual Foam System for Dual Foam Tanks	$22,574
4430-0045	95 GPM Akron Foam Eductor. Location: [#LOC].	$2,258
4430-0046	125 GPM Elkhart Foam Eductor Location: [#LOC]	$2,815
4430-0047	125 GPM Akron foam eductor. Location: [#LOC].	$2,579
4430-0048	95 GPM Elkhart Foam Eductor Location: [#LOC]	$2,568
4430-0051	Advent 30 Dual Foam System for Dual Foam Tanks	$25,549
4430-0052	CAFSPRO with 3.3 Foam Logix Compressed Air Foam System with 750gpm Manifold	$62,036
4430-0053	CAFSPRO with 5.0 Foam Logix Compressed Air Foam System with 750gpm Manifold	$63,091
4430-0056	125 GPM Elkhart Foam Eductor w/air actuated foam valve Location: [#LOC]	$3,398
4430-0057	125 GPM Akron Foam Eductor w/air actuated foam valve. Location: [#LOC].	$3,024
4430-0058	Hot Shift Clutch - Required with CAFS system	$3,078
4430-0059	Eclipse Compressed Air Foam System 500 GPM Manifold w/2002 FoamPro.	$80,668
4430-0060	CAFSPRO 5.0 FoamLogix Compressed Air Foam System with 1000 GPM manifold.	$64,802
4430-0061	FoamPro 3012 foam system, hydraulics PTO driven.	$23,497
4430-0062	Advent 120 Foam System single	$29,031
4430-0066	Foam Tank To Pump 1" Air/Act for Dealer install foam system.	$861
4430-0070	125 GPM Akron Simple Apparatus Foam System	$1,640
4430-0071	1500V Williams A/B Around The Pump foam system. Include A/B tanks control.	$9,108
4430-0073	1.5 Feecon Around The Pump Foam System	$4,434
4430-0075	2.0 Feecon Around The Pump Foam System	$4,564
4430-0076	Eclipse Waterous Compressed Air Foam System 1000 GPM Manifold.	$64,771
4430-0077	Waterous Advantus 6.0 Foam System	$19,822
4430-0078	Classic 140 Compressed Air Foam System. Shall include (5) Discharge outlets (1) 2.5" Left Hosebed Preconnect Discharge, (2) 1.5" Crosslay outlets, and (2) booster reels.	$43,030
4430-0079	The foam system performance shall be tested and certified in compliance with 2009 NFPA 1901.	$297
4430-0080	The balanced pressure foam system performance shall be tested and certified in compliance with 2009 NFPA 1901.	$591
4430-0081	1500 Williams Around The Pump Foam System Up Graded to 2000gpm at 3%	$2,888
4430-0085	Classic 140 Compressed Air Foam System.	$24,437
4430-0086	1.0 Feecon Around The Pump Foam System Preset at 3% Class B Foam. (For Pump&Roll with PortablePump)	$4,080
4430-0087	Advent 60 Foam System for a dual Foam Tank.	$30,121
4430-0089	The main pump manifold to have water loop for dealer installed foam system (Class A Foam System) to noted preconnects/discharges	$765
4430-0093	Venom 5.0 Hypro/Foam Pro Foam System.	$18,107
4430-0094	Advent 12 Elecrict (230) Dual Foam System for Dual Foam Tanks	$25,679
4430-0106	Advent 160 Foam System. For use with single foam cell application.	$33,599
4430-0107	WATP 500 B Foam System. Includes 1.5" Foam pick-up.	$8,517
4430-0108	FRC MFA200 Class A around the pump foam system.	$2,702
4430-0109	Waterous Advantus 3.0 foam system.	$14,413

4430-0112	125 GPM Akron Foam Eductor w/manual panel mount 1/4 turn foam valves (1) for A tank, and (1) for B tank. Location: [#LOC]	$3,343
4430-0113	The foam system shall be factory tested at, minimum, maximum, and midrange.	$297
4430-0114	Eclipse Compressed Air Foam System 3" Manifold w/Advantus 6.0 Foam system.	$76,187
4430-0115	125 GPM Akron foam eductor system with air actuation for both foam eductor and foam supply valve. Location: [#LOC].	$3,796
4430-0117	1500V Williams A/B Around The Pump Foam System with Single Tank and Aux Pickup to be use for Class A or Class B foam inlet.	$9,675
4430-0120	1500V Williams Manual A/B Around The Pump foam system with pickup. Include manual A/B tanks control with manual .75 flush valve.	$9,163
4430-0122	1601 Hypro/FoamPro foam system.	$7,810
4430-0124	Pneumax 140-SP Silver Compressed Air Foam System to be used on Ford F550 chassis and driven off the Hale DSD Pump. Requires special DSD pump with PTO Bore and SAE "B" hydraulic drive splined.	$25,302
4430-0128	Hale SmartCAFS 5.0 FoamLogix Compressed Air Foam System with 1000 GPM manifold.	$64,301
4430-0130	Waterous 200-P PTO Platinum Compressed Air Foam System	$28,727
4430-0131	Waterous 140-P PTO Platinum Compressed Air Foam System	$28,014
4430-0132	Waterous 80-P PTO Platinum Compressed Air Foam System	$21,395
4430-0133	Darley 150 ODIN Compressed Air Foam System.	$20,866
4430-0135	125 GPM Akron Foam Eductor w/manual panel mount 1/4 turn foam valves. Include push/pull for foam eductor Location: [#LOC]	$3,135
4430-0136	Darley 150-PTO Compressed Air Foam System	$26,524
4432-0000	Ranger 1.0 Hydro-Foam Electirc Nozzle	$4,106
4432-0001	Akron 5178 Electric 2000 GPM Nozzle.	$2,374
4432-0002	Akron 5070 Manual 2000 GPM Nozzle	$1,826
4432-0003	Elkhart SM2000 Electric Nozzle	$2,360
4432-0004	Ranger 1.5 Hydro Chem Electric Nozzle	$3,494
4432-0009	Hot Shot Ratio Controller 2" Discharge. Plumbed to: [#LOC].	$2,175
4432-0010	Hot Shot Ratio Controller 2.5" Discharge. Plumbed to: [#LOC].	$2,238
4432-0011	Hot Shot Ratio Controller 3" Discharge. Plumbed to: [#LOC].	$2,310
4432-0012	Advent Ratio Controller 2" Discharge. Plumbed to: [#LOC]	$1,780
4432-0013	Advent Ratio Controller 2.5" Discharge. Plumbed to: [#LOC]	$1,783
4432-0014	Advent Ratio Controller 3" Discharge. Plumbed to: [#LOC]	$1,810
4432-0015	Advent Ratio Controller 4" Discharge. Plumbed to: [#LOC]	$2,005
4432-0016	Advent Ratio Controller 5" Discharge. Plumbed to: [#LOC]	$3,656
4432-0019	Foam Pro Remote Start Switch	$722
4432-0020	Eclipse 1.5"/3.0" Compressed Air Foam System Discharge Kit. Location: [#LOC].	$23
4432-0022	1.5" Compressed Air Foam System Discharge Kit Location: [#LOC]	$347
4432-0023	2.0" Compressed Air Foam System Discharge Kit. Location: [#LOC].	$350
4432-0024	2.5" Compressed Air Foam System Discharge Kit. Location: [#LOC].	$353
4432-0025	3.0" Compressed Air Foam System Discharge Kit Location: [#LOC]	$395
4432-0026	3" Deck Gun Discharge Eclipse Compressed Air Foam System	$3,862
4432-0027	3" Deck Gun Compressed Air Foam System	$4,195
4432-0036	A/B Hypro/FoamPro manual foam selector.	$2,330
4432-0037	A/B Class 1 manual foam selector.	$3,364
4432-0045	Hot Shift Clutch	$3,169
4432-0052	Remote foam tank fill, FoamPro's "Power Fill".	$609
4432-0054	Akron Quick Disconnect Foam Pickup Tube on Driver's Side Pump Panel for Eductor. Located on: [#LOC].	$489
4432-0055	Elkhart Quick Disconnect Foam Pickup Tube on Driver's Side Pump Panel for Eductor Located on: [#LOC]	$695
4432-0056	Hale EZ-Fill foam system for a single foam tank. Includes clear hose wand (shipped loose). Controller and connection port located [#LOC].	$2,863
4432-0057	Hale EZ-Fill foam system for dual foam tank. Includes clear hose wand (ship loose). Controller and connection port located [#LOC].	$3,230
4432-0058	Akron quick-disconnect foam pickup tube on officer's side pump panel for eductor. Located on: [#LOC].	$489
4432-0059	Elkhart Quick Disconnect Foam Pickup Tube on Officer's Side Pump Panel for Eductor Located on: [#LOC]	$695
4432-0060	Label for ATP foam systems.	$35
4432-0061	FoamPro foam system refill. Includes clear hose wand (ship loose). Controller and connection port located [#LOC].	$3,235
4432-0063	Hale FoamLogix air actuated A/B selector.	$3,806
4432-0064	Hypro FoamPro electric actuated A/B selector.	$3,572
4432-0065	3" Deck Gun CAFSPRO Compressed Air Foam System.	$6,690
4432-0066	Additional 3/4" Foam Tank Valve for 95 Eductor and Dual Foam Cells	$471
4432-0070	Hot Shot Ratio Controller 4" Discharge. Plumbed to: [#LOC].	$3,082
4432-0074	.375 Foam Maniflod Drain	$137
4432-0075	FoamPro Advanced Digital Controller "auto start".	$140
4432-0077	Foam Pickup 10 feet with 1.0 PVC Clear Spiraflex Hose IPOS	$246
4432-0078	Foam tank drain plumbed to side panel with valve and 3/4" male garden hose connection. To allow filling of remote foam unit and pails from tank.	$884
4432-0079	A/B Class 1 Manual Foam Selector	$3,364
4432-0080	Special CAFS/FOAM Manifold for (4) preconnects, Deck Gun, and 3" Right Rear discharge.	$6,185
4432-0082	Foam Pickup 2" on Side Pump Panel. With Manual valve and Pickup Tube.	$823
4432-0083	Deck Gun Foam Tank To Pump Connection Provide a Manual 1.5" Valve Locate Next to Deck gun outlet.	$825
4432-0089	CAFS Manual Air Valve to be .3/4" Valve in place of standard.	$142

4432-0090	CAFS/Foam System Operation Label "Operate only (2) 1 3/4" Discharges or (1) 2 1/2" at a time"	$188
4432-0091	Special design 5" foam/water manifold with check valves.	$3,937
4432-0093	Hot Shot Ratio Controller 5". Plumbed to: [#LOC].	$3,141
4432-0094	Waterous Electric Actuated A/B Selector.	$3,418
4432-0096	Hale Foam Logix Remote Start Switch	$761
4432-0097	.75" Foam Manifold Drain with 1/4 turn valve.	$471
4432-0099	Foam System Plumbed to [#LOC].	$309
4432-0100	2.0" Compressed Air Foam System Discharge Kit with Electric actuated 1/2" valve. Location: [#LOC].	$384
4432-0101	2.5" Compressed Air Foam System Discharge Kit with Electric actuated 3/4" valve. Location: [#LOC].	$388
4432-0104	Hale Manual Single Foam Flush System.	$1,191
4432-0105	A/B Foam Selector locate Driver side walk way recess in box on diamond plate panel at front of module.	$179
4432-0108	Hot Shot Ratio Controller 5" Discharge with adjustable metering valve. Plumbed to: [#LOC]	$3,141
4432-0113	Foam Intake Test Port Locate on the intake side of pump between the strainer and the pump, bulkhead fitting is to be on operator pump panel.	$99
4432-0114	Foam testing. The foam system shall be calibrated for 1 X 3 Thunderstrom foam AR-AFFF concentrate. The foam propotioning system shall provide .25%, .5%, 1%, and 3% foam solutions within the allowable concentration ranges required in NFPA #1901. Each percentage shall be tested at a high and low flow and a revit shall be install at mid point..	$2,121
4432-0115	Foam ready manifold for a Hale FoamLogix or a FoamPro system with 3" plumbing feeding the manifold so the dealer can install the Hale or FoamPro manifold.	$899
4432-0117	1.5" FNST Hydro- Foam Aux Foam pickup. The 1.5" FNST foam inlet fitting shall be located on officer side pump panel with a electic over air control valve. And be control at the operator panel.	$1,428
4432-0118	Foam Strainer Pump Panel Mount with 1" connection ports and 2.5" NST cap. (IPOS strainer for foam system.)	$1,094
4432-0119	Foam Strainer Pump Panel Mount with 1" connection ports and 2.5" NST cap. (For Foam Refill)	$1,094
4432-0121	Foam Tank Supply/Flush 1" valves will be electric control operated through the V-MUX system. The flush valve to be located as close to foam tank supply valve as possible. A manual flush drain .75" valve will be located under the officer's side running board.	$1,070
4432-0122	A 1.50" x 10' reinforced concentrate hose and stinger shall be provided with NST threads to connect to the foam inlet as (shipped loose) for auxiliary foam operations.	$290
4432-0123	Eclipse 1.5"/3.0" Compressed Air Foam System Discharge Kit Location: [#LOC]	$554
4432-0125	6" Ratio Controller for Hot Shot II System. Include metering valve. Location: [#LOC].	$4,036
4432-0134	Eclipse 1.5"/3.0" Compressed Air Foam System Discharge Kit. Location: [#LOC].	$309
4432-0135	CAFS Audible w/light Low Air Alarm shall be tied into the CAFS air system. If it drop below 90PSI the alarm aviate.	$368
4432-0137	Hot Shot Ratio Controller 6" Discharge with adjustable metering valve. Plumbed to: [#LOC]	$4,353
4432-0138	Hot Shot Ratio Controller 2.5" Discharge with adjustable metering valve. Plumbed to: [#LOC]	$3,132
4432-0139	FT-550 Foam Refill System, Wildland	$1,783
4432-0151	FoamPro aux foam fill kit. Include check valve, level sensor, placard and camlok connection.	$756
4432-0152	1.5" Foam Tank to pump Electric/Air Actuated. With a guard switch cover adjacent to the foam control display.	$1,051
4432-0153	CAFS system water drain shall be extended out to pump panel.	$239
4432-0159	CAFs system drains shall be extended to the officer's side pump panel area.	$360
4432-0160	3" Compressed Air Foam System Discharge Kit with Electric actuated 3/4" valve. Location: [#LOC]	$448
4432-0161	1.5" Compressed Air Foam System Discharge Kit with Electric actuated 1/2" valve. Location: [#LOC]	$383
4432-0162	6" High Flow Ratio Controller for Hot Shot II System. Includes metering valve. Location: [#LOC].	$4,035
4432-0163	1.5" Foam Tank to pump Air Actuated. With a guard switch cover adjacent to the foam control display.	$1,050
4432-0164	Waterous Electric Actuated A/B Selector. A to be plumb to the foam tank, and B to be plumb to the left pump panel for an aux foam pick-up.	$3,418
4432-0165	Special design foam/water manifold to allow dealer supplied foam system to be plumbed to crosslay 1, crosslay 2 and rear discharge so they are foam ready.	$3,937
4432-0168	Auto on power-up mode, which automatically come on with pump in gear.	$140
4432-0169	Advent Ratio Controller 2" Discharge. Special Orifice size .10, .250, .500, 1.0, and 3.0% Plumbed to: [#LOC]	$1,780
4432-0170	Advent Ratio Controller 2.5" Discharge. Special Orifice size .10, .250, .500, 1.0, and 3.0% Plumbed to: [#LOC]	$1,783
4432-0171	Advent Ratio Controller 3" Discharge. Special Orifice size .10, .250, .500, 1.0, and 3.0% Plumbed to: [#LOC]	$1,810
4432-0172	Advent Ratio Controller 4" Discharge. Special Orifice size .10, .250, .500, 1.0, and 3.0% Plumbed to: [#LOC]	$2,005
4432-0173	An Elkhart quick-connect foam outlet with pick-up tube assembly permits foam from on-board tank supply or to a 5 gal. pails/buckets. For portable eductor. Install one on each side pump panel.	$1,872
4432-0176	An Elkhart quick-connect foam outlet with pick-up tube assembly permits foam from on-board tank supply or to a 5 gal. pails/buckets. For portable eductor. Location: [#LOC].	$938
4432-0179	A Elkhart quick-connect, foam outlet with pick-up tube assembly permits foam from on-board tank supply or to a 5 gal. pails/buckets. For portable eductor. Location: [#LOC].	$806
4432-0180	Foam Flush with 1/4" valve. Locate inside driver side upper pump access door, rearward.	$471
4432-0182	Extended warranty for Waterous CAFS compressor - 4 Years in addition to the standard 1 year warranty (parts only).	$2,755
4432-0185	Foam Flush System.	$113

4432-0187	Addition Foam Flush System. A 3/4" valve with garden hose bib connection mounted in pump compartment (1) for 2002 and (1) for 3060 system. They will be plumb to the foam supply line for flushing of the system. A check valve prevents water from entering the foam tank when the system is not being flushed.	$434
4432-0189	CAFS Compressor "Auto On".	$140
4432-0190	.75" Foam Manifold Drain with lift lever 1/4 turn valve.	$322
4432-0191	FoamPro off-board pickup. Includes clear hose wand (ship loose). Controller and connection port located [#LOC].	$3,417
4432-0193	Foam ready Manifold for a Hale Foam Logix or a Foam Pro system- plumbed to front jumpline , bottom 1.75" speedlay and officer side 2.5" discharge. W/3" plumbing.	$2,019
4432-0196	A CAFS Compressor RPM interlock indicator light, and label shall be on the pump operator panel. Indicator light will come on when engine RPM is to high to engage CAFS PTO.	$78
4435-0001	Class 1 Intelli-Tank water tank level gauge. On pump panel.	$503
4435-0002	Class 1 Intelli-Tank foam tank level gauge. On pump panel.	$520
4435-0003	Class 1 Intelli-Tank/Whelen 500 LED water tank level gauge package. Location of Whelen 500 tank level lights: [#LOC].	$4,071
4435-0004	Sight Tube Water Tank Level Gauge. Located driver's side front of body.	$518
4435-0005	Innovative Controls 5 Water Tank Level Gauge	$473
4435-0006	Innovated Contols 5 Foam Tank Level Gauge	$738
4435-0007	Class 1 Water Bar graph style Tank Level Gauge.	$791
4435-0008	Class 1 foam Bar graph style Tank Level Gauge.	$1,048
4435-0009	Fire Research TankVision model WL2600 Class A foam tank level gauge.	$973
4435-0010	Fire Research TankVision model WL2000 water tank level gauge.	$847
4435-0011	Fire Research TankVision model WL2700 B foam tank level gauge.	$972
4435-0012	Pump overheat indicator.	$374
4435-0013	4.5" Class 1 compound pressure gauge (30-0-600 PSI).	$199
4435-0014	Dual Read 4.5" Pressure Gauge (30-0-600 psi/100-0-4000 KPA).	$298
4435-0015	2.5" Class 1 compound pressure gauge (30-0-600). Discharge(s): [#LOC].	$143
4435-0016	Dual Read 2.5" Pressure Gauge (30-0-600 psi/100-0-4000 KPA). Discharge: [#LOC].	$201
4435-0018	Dual Read 3.5" Pressure Gauge (30-0-600 psi/100-0-4000 KPA). Discharge: [#LOC]	$273
4435-0019	3.5" Class 1 compound pressure gauge (30-0-600). Discharge: [#LOC].	$171
4435-0020	MC Products gauge heater line controls and strips for 4 gauges.	$766
4435-0021	Gauge heater strips, additional (EA).	$146
4435-0022	6" NoShok pressure gauge (30-0-600).	$695
4435-0023	4" NoShok master pressure gauges (30-0-600).	$212
4435-0024	6" Class 1 compound pressure gauge (30-0-600).	$684
4435-0025	Flowminder Super System. Discharge: [#LOC].	$2,827
4435-0026	Flowminder System with Totalizer. Discharge: [#LOC].	$1,828
4435-0027	Flow Meter Value System. Discharge: [#LOC].	$1,678
4435-0030	Transmission temperature gauge.	$259
4435-0031	Pump hourmeter on pump operator's panel.	$161
4435-0033	Ammeter gauge on pump operator's panel.	$294
4435-0034	Fuel level gauge on pump operator's panel.	$355
4435-0035	Enfo III System on Pump Operator's Panel	$1,071
4435-0036	Engine gauge package at the pump operator's panel.	$742
4435-0038	Class 1 Engine Status Center on Pump Operator's Panel	$1,759
4435-0040	FRC Tachplus engine monitoring display.	$1,442
4435-0047	Class 1 Intelli-Tank water tank level gauge, additional. Location: [#LOC].	$578
4435-0049	Class 1 tank level water LED graph gauge, additional. Location: [#LOC].	$791
4435-0050	FRC Tank Level Water TankVision Gauge, Additional. Location: [#LOC].	$538
4435-0051	Innovated Controls 5 Light Tank Level Water Gauge Additional Location: [#LOC]	$706
4435-0052	Class 1 Tank Level Water Mini Gauge Additional. Location: [#LOC].	$529
4435-0053	FRC Tank Level Water TankVision model WLA205-A00 Mini Gauge. Location: [#LOC].	$402
4435-0054	Innovative Controls 5 Light Tank Level Water Mini Gauge. Location: [#LOC].	$552
4435-0055	Class 1 Tank Level Intelli Foam Gauge Additional. Location: [#LOC].	$578
4435-0056	Class 1 Tank Level Foam Mini Gauge Additional Location: [#LOC]	$529
4435-0057	FRC Tank Level A Foam Tank Vision model WLA265-A00 Mini Gauge, Additional. Location: [#LOC].	$482
4435-0058	FRC Tank Level B Foam Tank Vision model WLA205-A00 Mini Gauge Location: [#LOC]	$482
4435-0059	Innovated Controls Tank Level Foam Mini Gauge Additional Location: [#LOC]	$552
4435-0063	Duplex Master Gauge for CAFS or Industrial Foam Systems.	$534
4435-0064	FRC Insight Ultimate model FPA400 combination pressure/flow gauge. Location: [#LOC].	$2,131
4435-0065	2.5" NoShok pressure gauge (30-0-600). For: [#LOC].	$154
4435-0066	IC5/Whelen 500 Water Tank Level Gauge Package Location of Whelen 500 Tank Level Lights: [#LOC]	$4,042
4435-0067	Class 1/Whelen PSTank Water Tank Level Gauge Package. Location of Whelen PSTank Strip-Lights: [#LOC].	$1,918
4435-0068	IC5/Whelen PSTank Water Tank Level Gauge Package Location of Whelen PSTank Strip-Lights: [#LOC]	$1,888
4435-0069	Class 1 ENFO IV system on pump operator's panel.	$960
4435-0070	Fire Research TankVision model WL2600 Class A and WL2700 Class B foam tank level gauges.	$1,939
4435-0071	FRC Tank Vision model WLA205-A00 Tank Level A and B Foam Gauges Location: [#LOC]	$960
4435-0072	Fire Research Tank Vision Water Tank Level Gauge with Automatic Tank Filling System model ATA400 Location: [#LOC]	$2,966
4435-0074	FRC Water Tank Level Gauge with Driver for Spartan Chassis only.	$1,127
4435-0075	Ashcroft 6" dry master intake and discharge gauges.	$594
4435-0076	Ashcroft 3.5" dry discharge gauges. Provide for each discharge.	$1,500
4435-0083	Innovative Controls 10 LED SL series water tank level gauge. On pump panel.	$515

4435-0084	Innovative Controls 10 LED series foam tank level gauge. On pump panel.	$738
4435-0085	Innovative Controls 10 LED SL series tank level water gauge, additional. Location: [#LOC].	$706
4435-0086	Innovative Controls 10 LED series Tank Level Water Mini Gauge. Location: [#LOC].	$552
4435-0087	Innovative Controls IC 10 LED SL series Tank Level Foam Mini Gauge Additional. Location: [#LOC].	$552
4435-0088	IC 10 LED SL series/Whelen 500 water tank level gauge package. Location of Whelen 500 tank level lights: [#LOC].	$4,042
4435-0089	IC 10 LED SL series/Whelen PSTank water tank level gauge package. Location of Whelen PSTank Strip Lights: [#LOC].	$1,888
4435-0090	Additional PSTank Level Strip-Light. Located: [#LOC].	$460
4435-0092	2.5" Class 1 compound pressure gauge (30-0-400). Discharge: [#LOC].	$143
4435-0093	3.5" Class 1 pressure gauge (30-0-400). Discharge: [#LOC].	$171
4435-0094	Class 1 4-1/2" compound pressure gauge (30-0-400 PSI).	$199
4435-0098	FRC Audible Water Tank Alarm. Wired to the FRC water tank level gauge and is to sound when tank level reaches a quarter tank.	$206
4435-0101	2.5" Span Pressure Gauge (30-0-600). Discharge: [#LOC].	$136
4435-0102	3.5" Span Pressure Gauge (30-0-600). Discharge: [#LOC].	$166
4435-0103	4.5" Span Pressure Gauge (30-0-600 PSI).	$193
4435-0104	MC Series 2000 4 Light Water Tank Level Gauge	$666
4435-0105	MC Series 2000 4 Light Series Foam Tank Level Gauge	$837
4435-0106	Dual Scale 3.5" Pressure Gauge 0-400 PSI / 100-2800 KPA. Replaces Standard	$331
4435-0108	Digital Pressure Gauge IPO Duplex Gauge	$851
4435-0109	2.5" Class 1 Pressure Gauge (30-0-600). IPO Duplex	$143
4435-0110	Pump Overheat Gauge Indicator with Audible Alarm	$478
4435-0111	MC Series 500 4 LED Series Water Tank Level Gauge	$790
4435-0112	Class 1 Pressure 4.5" Gauge (30-0-300 PSI)	$199
4435-0113	FRC TankVision/Whelen PSTank water tank level gauge package. Location of Whelen PSTank Strip-Lights: [#LOC].	$2,545
4435-0114	Digital CAFS CFM Flow Meter	$2,161
4435-0115	2.5" NoShok Pressure Gauge (-30-0-600 PSI/100-0-4000KPA). For: [#LOC].	$172
4435-0116	4" NoShock Dual Read Pressure Gauge 30-0-600PSI/100-0-4000KPA	$224
4435-0117	FRC Tank Level Foam Tank Vision Gauge Additional Location: [#LOC]	$611
4435-0118	4" NoShock Dual Read Pressure Gauge 30-0-400PSI/100-0-2800KPA	$224
4435-0119	2.5" NoShok Pressure Gauge (0-400 PSI/-0-2800KPA) For: [#LOC]	$172
4435-0120	Duplex Master Gauge (0-400 PSI) for CAFS or Industrial Foam Systems.	$534
4435-0122	Fire Research Tank Vision model WL2000 Water Tank Level Gauge w/an audible alarm low level buzzer shall be installed. The buzzer shall sound when the tank volume indicator drops to 1/4 tank.	$1,010
4435-0123	FRC Insight model FPA410 Ultimate Pressure Gauge LPM/KPA Location: [#LOC]	$2,131
4435-0124	6" Class 1 Compound Pressure Gauge (30-0-400 PSI).	$670
4435-0125	Class Digital Pressure Gauge Discharge: [#LOC]	$851
4435-0126	Digital Master Pressure Gauge	$812
4435-0127	3.5" Span Pressure Gauge (0-400). Discharge: [#LOC]	$174
4435-0128	Dual Read 2.5" Span Pressure Gauge (0-300 psi/0-2050KPA). Discharge: [#LOC]	$191
4435-0129	Dual Read 6.0" Span Pressure Gauge (30-0-400 psi/100-0-2800KPA)	$390
4435-0130	FRC Insight model FPA400 Ultimate Master Flow Gauge	$1,644
4435-0131	2.5" Class 1 Pressure Gauge (0-300). Discharge: [#LOC]	$151
4435-0133	FRC/Whelen 500 Water Tank Level Gauge Package Location of Whelen 500 Tank Level Lights: [#LOC]	$4,004
4435-0134	FRC Foam Tank Level Gauge "Class B Foam" with Driver for Spartan Chassis only.	$1,270
4435-0135	Class 1 Intelli/Whelen PSTank Water Tank Level Gauge Package Location of Whelen PSTank Strip-Lights: [#LOC]	$2,412
4435-0139	Span Pressure 4" Gauge (0-400 PSI)	$199
4435-0140	Span Master Intake/Pressure 4" 50/50 Gauge (30-0-300)	$333
4435-0147	Innovative Controls 14 LED SL series Water Tank Level Gauge	$522
4435-0149	IC 14 LED SL series/Whelen 500 Water Tank Level Gauge Package Location of Whelen 500 Tank Level Lights: [#LOC]	$4,074
4435-0151	4.5" Class 1 Pressure Gauge (30-0-600) Black Face w/White letters.	$212
4435-0152	2.5" Class 1 Pressure Gauge (30-0-600). Discharge with Black Face and White Letters: [#LOC]	$151
4435-0154	Class 1 Flowminder System with digital totalizer readout. Discharge: [#LOC]	$1,544
4435-0155	Dual Read 4.5" Span Pressure Gauge (30-0-600 psi/100-0-4000 KPA)	$298
4435-0156	Class 1 Intelli-40 Tank Water Tank Level Gauge with Blue LED's.	$752
4435-0157	Class 1 Intelli-40 Tank Foam Tank Level Gauge with Red LED's.	$719
4435-0158	6" Span Pressure Gauge (30-0-600)	$689
4435-0159	Dual Read 2.5" Pressure Gauge (30-0-400 psi/100-0-2800KPA). Discharge: [#LOC]	$201
4435-0160	Transmission Temperature Gauge with light and a buzzer alarm for audible warning.	$370
4435-0161	Dual Read 4.5" Pressure Gauge (30-0-400 psi/100-0-2800 KPA)	$298
4435-0162	IC10/Whelen M6 LED Water Tank Level Gauge Package Location of Whelen M6 LED Tank Level Lights: [#LOC]	$4,185
4435-0174	Sight Tube Water Tank Level Gauge. Located on driver's pump panel.	$518
4435-0175	Duplex Master Gauge (0-600 PSI) for CAFS or Industrial Foam Systems.	$612
4435-0177	Innovated Controls 14 LED SL series Tank Level Water Gauge Additional Location: [#LOC]	$732
4435-0178	Engine gauge package at the pump operator's panel.	$854
4435-0179	Deluxe engine gauge package with fuel, and transmission temp. gauge built into the tach gauge display at the pump operator's panel.	$976
4435-0180	2.5" Pressure Gauge Dual Read (0-400 PSI/-0-2700KPA) . Discharge: [#LOC]. Color: [#COL].	$252
4435-0181	4.5" Pressure Gauge (30-0-400 psi/100-0-2758 KPA). Color: [#COL].	$319

4435-0182	FRC Insight model FPA412 Ultimate Pressure Gauge LPM/KPA with back lighting Location: [#LOC]	$2,298
4435-0183	Sight Tube Water Tank Level Gauge with Indicator. Located inside pump compartment on driver's side as high/low as possible.	$518
4435-0184	2.5" NoShok pressure gauge (0-400). For: [#LOC].	$154
4435-0185	4" NoShok master pressure gauges 30-0-400PSI.	$260
4435-0186	Class 1 Tank Level Intelli 40 Water Gauge Additional Location: [#LOC]	$829
4435-0187	Class 1 Intelli-40 Tank Water Tank Level Gauge with Red LED's.	$771
4435-0190	IC10 Water with (1) Whelen PSTank Water Tank Level Gauge. Location of Whelen PSTank Strip-Lights: Officer side rear of front cab door.	$1,430
4435-0191	Dual Scale 3.5" Pressure Gauge 0-400 PSI / 100-2800KPA.. Discharge: [#LOC].	$278
4435-0192	Class 1 2.5" Pressure 0-400 PSI Gauges, Wildland	$381
4435-0193	2.5" Class 1 compound pressure gauge (0-400). Discharge: [#LOC].	$143
4435-0196	2.5" Waterway Pressure Gauge Dual Read (30-0-600 psi/100-0-4140 KPA). Discharge: [#LOC]. Color: [#COL].	$202
4435-0198	3.5" Class 1 pressure gauge (0-400). Discharge: [#LOC].	$174
4435-0200	2.5" Class 1 pressure gauge (0-600). Discharge: [#LOC].	$139
4435-0202	4.5" Class 1 Discharge pressure gauge (0-600 PSI).	$143
4435-0205	3.5" LED Class 1 compound pressure gauge (30-0-400). Discharge: [#LOC]. Color: [#COL].	$254
4435-0206	4.5" LED Class 1 compound pressure gauge (30-0-400). Color: [#COL].	$255
4435-0209	2.5" LED Class 1 compound pressure gauge (30-0-400). Discharge: [#LOC]. Color: [#COL].	$250
4435-0210	PSTank Level Strip-Light Pair Located: [#LOC] (Chassis only option require sale codes for gauge and driver)	$920
4435-0211	2.5" NoShok pressure gauge (30-0-600). Non-liquid filled. For: [#LOC].	$154
4435-0212	Generator hourmeter on officer side rear compartment.	$161
4435-0213	Class 1 3-1/2" compound pressure gauge (30-0-400 PSI). Master intake and discharge gauges.	$347
4435-0214	IC10 Water with (1) Whelen PSTank Water Tank Level Gauge. Location of IC10 LED tank level gauge on operator panel. Location of Whelen PSTank Strip-Lights: Officer side rear of body facing rearward.	$1,430
4435-0215	Class 1 4-1/2" compound pressure gauge (30-0-400 PSI). Locate Auto Fill Inlet.	$199
4435-0216	Class 1 Intelli-Tank water tank level gauge mounted on the rear of the body. Optimize mounting position on rear body using space not allocated by other equipment unless otherwise specified.	$503
4435-0217	Duplex 4.5" Dual Read Master Gauge (0-600 psi/0-4000KPA) for CAFS or Industrial Foam Systems.	$534
4435-0218	6" LED Backlit compound pressure gauge (30-0-400). Color: [#COL].	$561
4435-0219	Water pump digital water temperature gauge.	$366
4435-0224	3.5" Class 1 pressure gauge (0-400). w/Class 1 Logo. Discharge: [#LOC].	$170
4435-0226	DEF level gauge on pump operator's panel.	$355
4435-0229	2.5" LED Class 1pressure gauge (0-300). Discharge: [#LOC]. Color: [#COL].	$202
4435-0231	Class 1 Tank Level Intelli 40M Water Gauge Additional Location: [#LOC]	$769
4435-0232	4.5" LED Class 1 compound pressure gauge (30-0-300). Color: [#COL].	$328
4435-0233	Single Read 2.5" Thuemling Pressure Gauge (0-2800KPA. Location: One (1) for each discharge outlet.	$1,406
4435-0234	Single Read 4.5" Thuemling Pressure Gauge (100-0-4000 KPA) (1) master intake and, (1) master discharge gauges.	$579
4435-0236	Ashcroft 6" dry master intake and discharge gauges. (30-0-300)	$741
4435-0237	Ashcroft 3.5" dry discharge gauges. Provide for each discharge. (0-300)	$1,500
4435-0240	Innovative Controls 10 LED SL series tank level foam gauge, additional. Location: [#LOC].	$738
4435-0241	Innovative Controls 10 LED series foam tank level gauge with a bright yellow easy to read graphics overlay. On pump panel.	$737
4435-0242	Sight Tube Water Tank Level Gauge. Located on driver's side adjacent to pump operator panel.	$517
4435-0243	4" Innovative Controls Brass Case Nite-Glo Master Pressure Gauges with Bezel. Intake 30-0-400, and Discharge 0-400.	$907
4435-0244	2.5" Innovative Controls brass case pressure gauge (0-400) with color code bezel.	$165
4435-0245	Class 1 4-1/2" compound pressure gauge (30-0-400 PSI). (Discharge gauge package).	$199
4435-0246	2.5" Innovative Controls stainless steel case pressure gauge (0-400) with color code bezel.	$144
4435-0247	4" Innovative Controls stainless steel case master pressure gauges with bezel. Intake 30-0-400, and discharge 0-400.	$410
4435-0248	2.5" Innovative Controls stainless steel case dual read pressure gauge (0-2750KPA/0-400PSI) with color code bezel.	$144
4435-0249	4" Innovative Controls stainless steel case master pressure gauges with bezel. Intake 30-0-400, and discharge 0-400, dual read KPA/PSI.	$410
4435-0250	2.5" Innovative Controls brass case pressure gauge (0-400) with color code bezel.	$165
4435-0251	Innovative Controls SL Plus series water tank level gauge with E-One logo at the bottom.	$608
4435-0252	Innovative Controls SL Plus series foam tank level gauge (foam tank A).	$608
4435-0253	Innovative Controls SL Plus series foam tank level gauge (foam tank B).	$608
4435-0254	4" Innovative Controls brass case master pressure gauges with bezel. Intake 30-0-400, and discharge 0-400.	$611
4435-0255	4" Innovative Controls brass case master pressure gauges with bezel. Intake 30-0-400, and discharge 0-400, dual read KPA/PSI.	$602
4435-0257	Innovative Controls SL Plus series tank level water gauge, additional. Location: [#LOC].	$624
4435-0258	Addition 4" Innovative Controls stainless steel case master pressure gauges 0-400. Locate driver side pump panel.	$237
4435-0261	4" Innovative Controls stainless steel case master pressure gauges with bezel. Intake 30-0-400, and duplex discharge 0-400 for CAFS and Industrial applications.	$1,388
4435-0262	2.5" Innovative Controls Nite-Glo brass case pressure gauge (0-400) and color code bezel with blue light gauge illumination.	$328

4435-0263	2.5" Innovative Controls Nite-Glo brass case pressure gauge (0-400) and color code bezel with red light gauge illumination.	$328
4435-0264	FRC TankVision/FRC Maxvision water tank level gauge package. Location of FRC Maxvision Strip-Lights: each side of cab towards rear	$2,649
4435-0266	2.5" Innovative Controls Nite-Glo brass case pressure gauge (0-400) and color code bezel with white light gauge illumination.	$328
4440-0004	2.5" side suction top mount control handle Akron manual valve. Location: [#LOC].	$1,513
4440-0005	2.5" Left Intake Akron Manual Valve.	$1,140
4440-0006	2.5" Right intake Akron manual valve.	$1,140
4440-0007	2.5" Left Rear Intake Akron Manual Valve. (With rear discahrge location to be outside or below).	$1,839
4440-0008	2.5" Right Rear Intake Akron Manual Valve	$1,336
4440-0010	3" Left Intake Akron Manual Valve.	$1,870
4440-0011	3" Right Intake Akron Manual Valve.	$1,913
4440-0012	3" right rear intake Akron manual valve. (With rear discharge location to be outside or below.)	$2,195
4440-0014	5" front intake without valve.	$3,627
4440-0015	5" Front Intake w/5" Air Actuated Valve and Relief.	$5,720
4440-0016	5" right rear intake, no valve.	$2,768
4440-0017	5" Right Rear Intake w/5" Air Actuated Valve and Relief.	$4,606
4440-0025	5" front intake with no valve plumbed through front bumper.	$4,054
4440-0026	5" Front Intake w/5" Air Actuated Valve and Relief Plumbed Through Front Bumper.	$6,149
4440-0027	2.5" Left Intake Hale Manual Valve	$1,162
4440-0028	2.5" Right Intake Hale Manual Valve	$1,366
4440-0029	3" Right Intake Hale Manual Valve	$2,420
4440-0030	2.5" Side Suction Top Mount Control Handle Hale Manual Valve Location: [#LOC]	$1,733
4440-0031	3" Left Intake Hale Manual Valve	$1,898
4440-0032	5" Front Intake without Valve for use with Spartan Chassis	$1,429
4440-0033	2.5" Left Rear Intake Hale Manual Valve. (With rear discahrge location to be outside or below).	$1,997
4440-0034	2.5" Right Rear Intake Hale Manual Valve	$1,493
4440-0035	3" Right Rear Intake Hale Manual Valve	$2,405
4440-0036	2.5" left intake Elkhart manual valve.	$1,296
4440-0037	3" Left Intake Elkhart Manual Valve	$2,097
4440-0038	2.5" Left Rear Intake Elkhart Manual Valve. (With rear discahrge location to be outside or below).	$1,993
4440-0039	2.5" Side Suction Top Mount Control Handle Elkhart Manual Valve. Location: [#LOC].	$1,664
4440-0040	2.5" Right Intake Elkhart Manual Valve	$1,296
4440-0041	3" Right Intake Elkhart Manual Valve	$2,141
4440-0042	2.5" Right Rear Intake Elkhart Manual Valve	$1,487
4440-0043	3" Right Rear Intake Elkhart Manual Valve. (With rear discahrge location to be outside or below).	$2,421
4440-0044	5" Left Rear Intake w/5" Air Actuated Valve and Relief. Requires air actuated tank to pump with side mount pump module configuration.	$5,005
4440-0045	4" Left Rear Intake Akron Electric Valve w/Intake Relief Valve.	$5,365
4440-0046	4" Right Rear Intake Akron Electric Valve w/Intake Relief Valve.	$5,365
4440-0047	4" Left Rear Intake Elkhart Electric Valve w/Intake Relief Valve	$5,774
4440-0048	5" Right Rear Intake Elkhart Electric Valve w/Intake Relief Valve	$6,427
4440-0049	3" Left Rear Intake Akron Manual Valve. (With rear discahrge location to be outside or below).	$2,560
4440-0050	3" Left Rear Intake Hale Manual Valve. (With rear discahrge location to be outside or below).	$2,763
4440-0051	3" Left Rear Intake Elkhart Manual Valve. (With rear discahrge location to be outside or below).	$2,780
4440-0053	4" Left Rear Intake Hale Electric Valve w/Intake Relief Valve	$6,416
4440-0054	4" Right Rear Intake Hale Electric Valve w/Intake Relief Valve	$6,416
4440-0055	3" Side Suction Top Mount Control Handle Akron Manual Valve. Location: [#LOC].	$2,175
4440-0056	3" Side Suction Top Mount Control Handle Hale Manual Valve Location: [#LOC]	$2,380
4440-0057	3" Side Suction Top Mount Control Handle Elkhart Manual Valve Location: [#LOC]	$2,396
4440-0058	5" Right Rear Intake w/5" Electric Actuated Valve and Relief.	$6,427
4440-0059	5" Left Rear Intake w/5" Electric Actuated Valve and Relief.	$6,427
4440-0061	5" front intake w/5" Akron electric actuated valve and relief.	$7,162
4440-0062	5" Front Intake w/5" Elkhart Electric Actuated Valve and Relief.	$7,165
4440-0063	Intake 6" Elkhart Elk-O-Lite 9786 Piston Valve. Ship Loose.	$2,146
4440-0064	2.5" Left Intake w/3" Akron Manual Valve	$1,742
4440-0065	2.5" Left Intake w/3" Hale Manual Valve	$1,946
4440-0066	2.5" Left Intake w/3" Elkhart Manual Valve	$1,963
4440-0067	2.5" Right Intake w/3" Akron Manual Valve	$1,742
4440-0068	2.5" Right Intake w/3" Hale Manual Valve	$1,946
4440-0069	2.5" Right Intake w/3" Elkhart Manual Valve	$1,963
4440-0070	2.5" Side Suction Top Mount Control Handle w/3" Akron Manual Valve Location: [#LOC]	$2,114
4440-0071	2.5" Side Suction Top Mount Control Handle w/3" Hale Manual Valve Location: [#LOC]	$2,319
4440-0072	2.5" Side Suction Top Mount Control Handle w/3" Elkhart Manual Valve Location: [#LOC]	$2,333
4440-0074	5" Front Intake without Valve Low "S" in Tray	$3,533
4440-0075	5" Front Intake w/5" Air Actuated Valve and Relief Low "S" in Bumper Tray.	$5,626
4440-0077	2.5" Side Intake Operator Control Akron Elec Valve Drivers side.	$3,030
4440-0078	2.5" Left Intake Elkhart Unibody TM Control Manual Valve	$1,412
4440-0079	3" Side Suction Top Mount Control Handle Elkhart Manual Unibody Valve Location: [#LOC]	$2,181
4440-0081	2.5" side suction air control Akron valve Drivers side.	$1,167
4440-0082	2.5" Left Intake Akron Manual Valve With Integral 30 Degree Droop	$1,214
4440-0083	2.5" Right Intake Akron Manual Valve With Integral 30 Degree Droop	$1,214
4440-0084	5" Front Intake w/5" Manual Gear Actuated Valve and Relief	$6,710
4440-0086	2.5" Side Intake Operator Control Akron Elec Valve Officer side.	$3,030
4440-0087	2.5" Intake with Akron electric valve. Controller to be located at pump operator panel. Locate intake [#LOC].	$3,044

4440-0088	2.5" Intake with Hale electric valve. Controller to be located at pump operator panel. Locate intake [#LOC].	$3,044
4440-0089	5" Front Intake w/5" Electric Actuated Valve and Relief Low "S" in Bumper Tray	$7,068
4440-0090	2.5" Side Suction Air Act Akron Valve Locate Rear of Steamer.	$1,668
4440-0091	2.5" Side Suction Top Mount Control Handle w/3" Elkhart Unibody Manual Valve Location: [#LOC]	$2,214
4440-0092	3" Left Intake Elkhart Unibody Manual Valve	$1,870
4440-0093	3" Right Intake Elkhart Unibody Manual Valve	$1,913
4440-0094	2.5" Left Intake Elkhart Unibody Manual Valve w/chrom valve face.	$1,140
4440-0095	2.5" Right Intake Elkhart Unibody Manual Valve w/chrome valve face.	$1,140
4440-0096	5" Front Intake w/4" Hale Electric Actuated Valve and Relief Low "S" in Bumper Tray	$7,044
4440-0097	2.5" Right Intake Elkhart Unibody Manual Valve	$1,140
4440-0098	5" Front Intake w/5" Akron Electric Actuated Valve and Relief	$7,162
4440-0099	2.5" Intake with Akron electric valve. Controller to be located at pump operator panel. Locate intake [#LOC].	$3,044
4440-0100	5" Right Rear Intake w/5" Electric Actuated Valve and Relief.	$6,427
4440-0101	3.0" Side Intake Operator Control Akron Elec Valve Officer side.	$3,493
4440-0102	3" Left Rear Intake Akron Electric Valve w/Intake Relief Valve	$3,605
4440-0103	5" Front Intake w/5" Elect. Actuated Valve and Relief Plumbed Through Front Bumper.	$7,162
4440-0104	3.0" Side Intake Operator Control Akron Electric Valve Driver side.	$3,493
4440-0105	2.5" Intake Akron Manual Valve for Rear Mount Location: [#LOC]	$1,346
4440-0106	2.5" Intake Akron Electric Valve for Rear Mount Location: [#LOC]	$3,255
4440-0107	2.5" Side Suction Top Mount Control Handle Elkhart Manual Unibody Valve Location: [#LOC]	$1,497
4440-0111	Officer side 5" rear intake (No Valve). Intake to run under officer side of tank and then angle into B1. In B1 the intake needs to angle downward to above floor mounted reel. Support brackets will be provided as required and to engineering requirements. To include any additional primer valves as required.	$4,442
4440-0112	2.5" Intake with Elkhart Unibody electric valve. Controller to be located at pump operator panel. Locate intake [#LOC].	$3,044
4440-0116	2.5" Left Intake w/3" Elkhart Unibody Manual Valve	$1,695
4440-0117	2.5" Right Intake w/3" Elkhart Unibody Manual Valve	$1,695
4440-0126	Akron 2.5" foam system intake with swing handle. For use with Williams Advent or Hot Shot 150 foam system. Locate to [#LOC].	$1,140
4440-0130	2.5" Right Intake w/3" Akron Manual Valve. Location: (REAR OF STREAM)	$1,742
4440-0131	2.5" Right Side intake Akron manual valve. Locate valve down low and the handle to be horizontally.	$1,313
4440-0133	3" Intake with Akron electric valve. Controller to be located at pump operator panel. Locate intake [#LOC].	$3,493
4440-0134	3" Intake with Elkhart Unibody electric valve. Controller to be located at pump operator panel. Locate intake [#LOC].	$3,493
4440-0137	2.5" side suction top mount control handle Akron manual valve with chrome plated end. Location: [#LOC].	$1,563
4440-0138	2.5" right intake Akron manual valve with chrome plated end.	$1,190
4440-0139	2.5" Intake Akron Manual Valve for Rear Mount Location: officer side rear intake with Integral 30 Degree Droop	$1,406
4440-0140	2.5" right intake Akron manual valve, located rear of steamer IPO standard location.	$1,140
4440-0141	5" Front Intake w/5" Air Actuated Valve and Relief. A three position air control switch will be located adjacent to the front suction on top of gravel shield inboard of front suction swivel.	$5,720
4440-0142	5" Left Rear Intake w/5" Air Actuated Valve and Relief. Does not include cap.	$4,853
4440-0143	2.5" Intake with Akron Electric Valve & Navigator Pro 9323 Controller with 30degree droop. Controller locates on pump operator panel. Locate intake [#LOC].	$2,967
4440-0144	5" Right Rear Intake w/5" Manual Hand Wheel Actuated Valve and Relief.	$6,329
4440-0146	Aux 2.5" foam system intake with swing handle. Locate to be [#LOC].	$1,140
4440-0147	2.5" Left Intake Akron Manual Valve With Integral 30 Degree Chrome Droop.	$1,409
4440-0148	2.5" Right Intake Akron Manual Valve With Integral 30 Degree Chrome Droop.	$1,409
4440-0149	2.5" Side Intake Top Mount Control Handle Akron manual valve. With Integral 30 Degree Chrome Droop. Location: [#LOC].	$1,781
4440-0150	2.5" Side Intake Top Mount Contro Handlel Akron manual valve. With Integral 30 Degree Droop.. Location: [#LOC].	$1,586
4440-0151	2.5" Side Suction Top Mount Control Handle Elkhart Manual Unibody Valve W/30 degree Chrome Droop. Location: [#LOC]	$1,766
4440-0152	2.5" Left Intake Elkhart Unibody Manual Valve w/30 degree Chrome Droop.	$1,409
4440-0153	2.5" Right Intake Elkhart Unibody Manual Valve w/30 degree Chrome Droop.	$1,409
4440-0155	2.5" Left Rear Intake Akron Manual Valve. Top Mount control.	$2,066
4440-0158	4" Right Rear Intake Akron Electric Valve include 9323 controller w/Intake Relief Valve.	$5,364
4440-0159	5" front intake w/5" Akron electric actuated valve and relief with 9323 valve controller.	$7,162
4440-0160	5" Front Intake w/5" Electric Akron Valve with 9323 controller and Relief Low "S" in Bumper Tray	$7,068
4445-0004	Front intake swivel 5" polished chrome.	$2,155
4445-0005	Front intake swivel 6" polished chrome.	$2,241
4445-0006	Intake Adapter 5" FNPT x 4.5" MNST for Front Intake	$438
4445-0007	Intake adapter 5" FNPT x 6" MNST for front intake.	$540
4445-0008	Intake Relief Valve - Elkhart.	$646
4445-0009	Intake relief valve, Akron.	$474
4445-0011	Valve Relief Intake - Ross 2.5"	$1,954
4445-0013	2.5" Check Valve for [#LOC] intake.	$408
4445-0014	3" Check Valve for [#LOC] Intake	$698
4445-0015	6" Check Valve for [#LOC] Steamer	$680
4445-0016	Intake relief valve, Hale 2.5".	$652

4445-0018	Intake relief valve outlet to be extended to the side of the truck under the running board. Includes tag that reads "Intake Pressure Relief Outlet - Do Not Cap".	$294
4445-0019	Intake Adapter 5" FNST x 4.5" MNST for Front Intake	$438
4445-0020	Intake Adapter 5" FNST x 6" MNST for Front Intake	$540
4445-0021	Intake Adapter 5" FNPT x 4.5" MNST for Rear Intake	$438
4445-0022	Intake adapter 5" FNPT x 6" MNST for rear intake.	$540
4445-0023	Recessed front suction intake swivel in bumper, 3" in tray.	$993
4445-0024	Intake adapter 5" FNPT x 5" MNST for front intake.	$402
4445-0025	Intake Adapter 5" FNPT x 5" MNST for Rear Intake.	$402
4445-0027	Intake Adapter 4" FNPT x 4" FNST for Rear Intake.	$387
4445-0028	Intake bleeder/drain valve to be extended to the side of the truck.	$60
4445-0030	Intake Adapter 5" FNST x 4" MNST with LH 4" cap for Front, Rear, or Side Intake.	$438
4445-0032	Front Intake Swivel 5" Painted Job Color	$121
4445-0038	Waterous Intake Pressure Relief Valve.	$1,492
4445-0039	Intake Adapter 2-1/2"MNST X 3" FNST Swivels with plug.	$248
4445-0042	Storz Connector 4"FNPT x 4" Storz 30Deg Elbow with Tethered Cap For rear intake.	$352
4445-0046	Storz Connector 5"FNPT x 6" Storz with Tethered Cap For rear intake.	$375
4445-0048	Intake pressure relief valve, Task Force Tips.	$457
4445-0049	Intake relief valve outlet to be extended to the side of the truck under the front body compartment. Includes tag that reads "Intake Pressure Relief Outlet - Do Not Cap".	$294
4445-0050	Intake adapter 5" FNPT x 6" MNST for rear intake.	$540
4445-0052	Recessed front suction intake swivel in bumper, 3" in tray using aluminum smooth plate with black Scorpion coating (IPOS diamond plate).	$1,075
4445-0054	Intake Adapter 5" FNPT x 4" MNST for Front, Rear, or Side Intake with 4" Cap.	$438
4445-0055	Intake adapter 5" FNPT x 5" MNST for front intake.The 5" front intake adapter shall be mounted so the threads approximately 2" from the bumper (Flush+2).	$402
4445-0056	Storz Connector 5" FNPT x 4" Storz 30 Degree Elbow with Tethered Cap For Rear Intake.	$458
4445-0058	5" Check Valve shall be install in front intake to prevent back flow.	$1,127
4445-0060	Front intake bleeder valve to be located adjacent to inlet at front bumper.	$92
4445-0062	2.5" Left Aux Intake shall be as located approximately 6" below main pump inlet offset to rear.	$364
4445-0063	Storz Connector 5"FNPT x 5" Storz with Tethered Cap for front intake.	$375
4445-0068	Storz Connector 5"FNPT x 5" Storz with Tethered Cap For front intake.	$375
4445-0069	Intake Adapter 5" FNPT x 4.547 PHOENIX 6 TPI with cap for Front, or rear intake.	$651
4450-0007	1" Tank Fill Akron Manual Valve	$414
4450-0008	1.5" tank fill Akron manual valve.	$943
4450-0009	1.5" Tank Fill Hale Manual Valve	$1,092
4450-0010	2" tank fill Akron manual valve.	$1,133
4450-0011	2.5" tank fill Akron manual valve. At pump panel.	$1,213
4450-0012	1.5" tank drain Akron manual valve.	$826
4450-0014	Direct 2.5" water tank fill with Akron valve. Location: [#LOC].	$1,373
4450-0020	2.5" rear direct tank fill. Location: [#LOC].	$1,370
4450-0021	3" Dual Tank to Pump Akron Manual Valves - Side Panel Controlled	$1,614
4450-0022	3" tank to pump Akron manual valve.	$1,193
4450-0023	3" Tank to Pump Akron Air Actuated Valve	$1,671
4450-0026	5" Rear Jet Dump No Valve. Include 1-1/2" inline valve and high pressure hydraulic hose connected to the 1-1/2" internal tank piping which runs to the rear of the booster tank.	$2,293
4450-0027	5" Rear Jet Dump w/5" Manual Butterfly Valve.	$3,566
4450-0028	Newton Dump with Manually Operated Valve.	$2,049
4450-0029	Newton Dump Extension. For use with a manually operated Newton Dump.	$1,014
4450-0030	Newton Directional Chute. Includes chute support bracket and support bolts mounted each side on trailing edge of body/beavertails.	$1,648
4450-0031	Electric actuated dump valve includes 18" electric telescopic extension and switch.	$5,544
4450-0032	2" Tank Fill Akron Electric Valve	$2,791
4450-0034	2.5" Tank Fill "AutoFill" Automatic Tank Fill Valve. Location: [#LOC].	$8,034
4450-0035	2.5" Direct Tank Fill Location: [#LOC]	$1,260
4450-0038	Hale 4" Air Tank to Pump for CAFSPRO Foam System.	$4,517
4450-0054	2.5" Tank Fill Hale Manual Valve	$1,595
4450-0055	Hale 4" Manual Tank-to-pump	$3,409
4450-0056	3" Air Tank to Pump for Cafspro Foam System with4" plumbing.	$2,337
4450-0057	3" Tank to Pump Hale Manual Valve	$1,360
4450-0058	2.0" Tank Fill Hale Manual Valve	$1,297
4450-0059	1.5" Tank Fill Elkhart Manual Valve	$1,025
4450-0060	2" Tank Fill Elkhart Manual Valve	$1,215
4450-0061	2.5" Tank Fill Elkhart Manual Valve	$1,366
4450-0062	3" Tank to Pump Elkhart Manual Valve	$1,422
4450-0063	Direct 2.5" Water Tank Fill with Hale Valve. Location: [#LOC]	$1,531
4450-0064	Direct 2.5" Water Tank Fill with Elkhart Valve. Location: [#LOC]	$1,526
4450-0065	Direct 3" Water Tank Fill. Location: [#LOC].	$1,608
4450-0066	Tank-to-pump 4" Akron Air Valve.	$3,635
4450-0067	Tank-to-pump 4" Akron electric valve.	$3,717
4450-0068	3" Tank to Pump w/3.5" Waterous Valve	$1,823
4450-0070	2.5" Tank Fill Hale Electric Valve	$2,856
4450-0071	Tank-to-pump 4" Hale Electric Valve	$4,685
4450-0072	2.5" Direct Fill Line into the tank, Akron electric valve. Location: [#LOC].	$3,312
4450-0073	3" Tank to Pump w/3.5" Waterous Electric Valve	$3,523
4450-0074	2" Tank Fill Akron Valve Handwheel Control	$2,200
4450-0075	2" Tank Fill Elkhart Valve Handwheel	$2,253
4450-0076	2.5" Tank Fill Akron Valve Handwheel Control	$2,279

4450-0077	2.5" Tank Fill Elkhart Valve Handwheel Control	$2,330
4450-0078	3" Dual Tank to Pump Akron Air Valves.	$2,656
4450-0080	3" Tank to Pump Akron Manual Valve two (2) independent Top mount controls	$1,614
4450-0082	1.5" Tank Drain Hale Manual Valve	$931
4450-0083	1.5" Tank Drain Elkhart Manual Valve	$907
4450-0085	3" Tank to Pump Elkhart Unibody Manual Valve	$1,512
4450-0086	2" Tank Fill Elkhart Unibody Manual Valve	$1,218
4450-0087	2.5" Tank Fill "AutoFill" Automatic Tank Fill Valve. Location: [#LOC].	$8,091
4450-0088	2" Tank Fill Elkhart Unibody Electric Valve	$2,579
4450-0089	Tank-to-pump 3" Elkhart Electric Valve	$3,099
4450-0090	1.5" Direct Tank Fill Elkhart Unibody Manual Valve Left Side Panel	$1,132
4450-0091	2.5" Direct Tank Fill "AutoFill" Automatic Tank Fill Valve. Location: [#LOC].	$4,546
4450-0092	3" Tank to Pump Akron Valve Hand Wheel Control.	$2,462
4450-0093	Tank-to-pump 3" Akron Electric Valve	$3,470
4450-0094	Driver side lower pump panel mounted 2.5" direct tank fill.	$2,176
4450-0095	2" Tank Fill Hale Electric Valve	$2,791
4450-0096	Electric 3" Akron tank to pump. Controller located on pump control panel.	$3,347
4450-0097	Electric 3" Hale tank to pump. Controller located on pump control panel.	$3,347
4450-0098	2.5" Tank Fill Akron Electric Valve	$2,953
4450-0099	3" Tank to Pump Elkhart Unibody Air Actuated Valve	$1,682
4450-0100	Direct Rear 2.5" Water Tank Fill [#LOC] with 2.5"Check Stainless steel Technocheck Valve.	$1,127
4450-0101	Newton Dump with electrically actuated valve and manually actuated chute. Electric dump valve control to be located to the driver side rear within reach from the ground.	$5,017
4450-0102	Direct 1" Water Tank Fill Plumb to the fill Tower and Terminate with .75 Female Hose Bib. Location: driver side pump panel.	$531
4450-0103	Direct Rear 2.5" Water Tank Fill with 2.5"Check Stainless steel Technocheck Valve. Location: [#LOC]	$1,127
4450-0104	6" Rear Gravity Dump No Valve	$2,646
4450-0105	3" Tank Fill Akron Manual Valve	$1,595
4450-0106	6" Rear Jet Dump w/6" Electric/Air Butterfly Valve with Control Switchs in Cab and Pump operator panel side Rear.	$3,789
4450-0107	Direct 2.5" water tank fill with 3" Elkhart manual valve. Location: [#LOC].	$1,759
4450-0108	2" tank fill Akron 9313 electric valve.	$2,791
4450-0109	2.5" Tank Fill Direct Akron Electric Valve with 9323 controller. Location: [#LOC]	$3,312
4450-0110	Tank-to-pump 4" Akron electric valve.	$3,717
4450-0112	Electric 3" Akron tank to pump. Controller located on pump control panel.	$3,347
4450-0113	5" Rear Jet Dump (No valve). For use with a center slam strip rear end.	$2,069
4450-0114	3" Tank to Pump Electric Over Air Actuated Valve. (For Pump&Roll Operation)	$1,771
4450-0115	Newton Dump with Electric Operated Valve.	$3,931
4450-0116	2.5" Tank Fill Elkhart Unibody Manual Valve	$1,366
4450-0117	Tank-to-pump 4" Elkhart Unibody Electric Valve	$3,717
4450-0118	Direct 2.5" Water Tank Fill with Elkhart Unibody Valve. Location: [#LOC]	$1,526
4450-0119	3" tank to pump Akron manual valve w/4" tank connection.	$1,216
4450-0120	2.5" Rear Tank Inlet. Includes Water Level Gauge Located in B1 Compartment	$1,470
4450-0121	3" Tank to pump Akron air actuated valve w/4" tank connection.	$1,671
4450-0122	3" Tank To Pump Akron Electric Actuated Valve w/4" Plumbing.	$3,430
4450-0123	Direct 3" Tank Fill Akron Electric Valve with control at pump operator panel valve Location: [#LOC]	$3,347
4450-0124	3" Tank To Pump Elkhart Unibody Manual Valve w/4" Plumbing.	$1,276
4450-0125	3" Tank To Pump Elkhart Unibody Air Actuated Valve w/4" Plumbing	$1,766
4450-0126	Newton Dump with Manually Operated Valve. Model 1060 with 6" Extendable Handle.	$2,054
4450-0127	2.5" Tank Fill "AutoFill" Automatic Tank Fill Valve with IntelliTank level gauge located behind officer side pump panel. Location: [#LOC].	$8,034
4450-0131	2.5" Tank Fill Elkhart Unibody Electric Valve	$3,081
4450-0132	3" Tank To Pump Elkhart Unibody Electric Actuated Valve w/4" Plumbing	$3,446
4450-0133	3" Tank To Pump Akron Air Actuated Valve w/4" Plumbing	$1,671
4450-0134	3" Tank To Pump Akron Manual Valve w/ Trident Hand Wheel Control and 4" tank connection.	$2,998
4450-0135	4" tank to pump with Akron air actuated valve. For use with rear mount pump.	$2,882
4450-0136	4" tank to pump with Elkhart air actuated unibody valve. For use with rear mount pump.	$2,882
4450-0137	4" tank to pump with Akron electric valve. For use with rear mount pump.	$3,299
4450-0138	4" tank to pump with Elkhart unibody electric valve. For use with rear mount pump.	$3,299
4450-0139	2" tank fill with Akron manual valve. For use with rear mount pump.	$1,070
4450-0140	2" tank fill with Akron electric valve. For use with rear mount pump.	$2,576
4450-0141	2" tank fill with Elkhart unibody manual valve. For use with rear mount pump.	$1,070
4450-0142	2" tank fill with Elkhart unibody electricl valve.	$2,576
4450-0146	Tank-to-pump 3" Elkhart Unibody Electric Valve	$3,099
4450-0148	4" rear direct tank fill. Includes handwheel control, swivel with droop with cap and retainer. Located to [#LOC] of the rear body.	$2,608
4450-0149	2.5" rear direct tank fill. Includes swing handle control, swivel with droop and cap with retainer. Located to [#LOC] of the rear body.	$1,265
4450-0156	3.0" Tank Drain Akron Air Actuated Valve.	$1,671
4450-0158	Rear tank dump. Includes stainless finish steel assembly with electrically actuated valve. For use with slip on extension and chute. Includes Slip-on stainless steel dump extension and chute with beavertail mounted removable support arm bracket and tailboard mounted storage tray (officer side) with retaining straps.	$5,544
4450-0160	Bush Pack 1" Fill with 1" Cam-Lock fitting located on pump operator pump panel. Include a 3' length of 1" clear hose.	$421
4450-0161	Direct .75" Water Tank Fill Plumbing to Terminate with .75 Female Hose Bib.Location: [#LOC]	$531

4450-0162	Direct 2.5" water tank fill with Akron valve. Location: Driver side rear of steamer Top Mount Control.	$1,519
4450-0163	Direct 3" water tank fill. Location: Driver side pump panel.	$1,608
4450-0164	Direct 2.5" Tank Fill Akron Electric Valve with Dual Control (1) control at the valve and (1) at the pump operator panel. Valve location officer side rear.	$3,991
4450-0165	3" rear direct tank fill. Includes swing handle control, swivel with droop and plug with retainer. Located to [#LOC] of the rear body.	$1,481
4450-0166	Additional 3" Tank To Pump Akron Manual Valve w/4" plumbing. Shall include internal plumbing to the rear of the tank into the rear sump on officer side.	$2,196
4450-0167	Direct tank fill, Right rear panel, 2.5" Akron, control at valve, option, Wildland	$793
4450-0168	Direct tank fill, Left side pump panel, 2" Akron, control at valve, option, Wildland	$793
4450-0169	4" rear direct tank fill. Includes handwheel control, with 5" Swivel Storz elbow and cap. Located to [#LOC] off rear of body	$3,075
4450-0170	Rear tank dump. Includes stainless finish steel assembly with electrically actuated valve. For use with slip on extension and chute. Includes beavertail mounted removable support arm bracket. Slip-on stainless steel dump extension with tailboard mounted storage tray (officer side) with retaining straps and chute mounted in B1 compartment above the dump.	$5,544
4450-0171	2.5" rear direct tank fill. The 2.5" direct water tank fill connection shall include an inlet strainer, a 2.5" FNST chrome inlet swivel, w/double male nst adapter and a chrome cap with cable. [#LOC] of the rear body.	$1,265
4450-0172	4" Direct Tank Inlet/Outlet w/4" Elect Valve. Include 4" plumbing, strainer and terminate with 4"FNST X 5" storz adapter w/cap. Location at left side pump panel.	$4,339
4450-0174	2.5" Direct Tank Fill Akron Electric Valve with Dual Control (1) control at the valve and (1) at the pump operator panel. Valve location officer side rear.	$4,236
4450-0175	4" rear direct tank fill. Includes electric dual control (1)operator panel (1) at valve, with 4" Swivel Storz elbow and cap. Located to (1) left and (1) right side off the rear body	$3,940
4450-0176	3" Tank to Pump Electric Over Air Actuated Valve w/4" Plumbing.. Include (1) control in cab, and (1) control pump operator panel).	$1,770
4450-0182	Rear tank dump. Includes stainless finish steel assembly with air actuated valve on top of dump assembly. Includes integral swivel chute with manual extension.	$6,229
4450-0183	4" rear direct tank fill. Includes handwheel control, with cap and retainer. Valve to be Located on rear tailboard officer side. Include stainless steel plumbing from the top of the tank to tailboard. A 2.5" Direct inlet shall be"T" into the 4" piping up high.	$4,426
4450-0185	3" Tank to Pump Electric Over Air Actuated Valve. (For Pump&Roll Operation)	$1,770
4450-0186	2.5" Tank Fill "AutoFill" Automatic Tank Fill Valve. Location: [#LOC].	$8,240
4450-0188	Rear tank dump. Includes painted steel assembly with manually actuated valve on top of dump assembly. Includes integral 6012 series swivel chute with manual telescopic extension and with locking system.	$3,879
4450-0190	Rear tank dump. Includes painted steel assembly with electric actuated valve on top of dump assembly. Includes integral swivel chute with manual telescopic extension and two locks one each side.	$5,463
4450-0191	Rear tank dump. Includes painted steel assembly with electric actuated valve and integral manual extension chute.	$2,640
4450-0192	Rear tank dump. Includes stainless steel assembly with electrically actuated 1070 dump valve. Includes integral swivel chute with manual extension.	$7,078
4450-0193	Driver and officer side tank dumps. Includes stainless steel assembly with electrically actuated valve. For use with flip chute.	$5,042
4450-0195	Rear tank dump. Includes stainless steel assembly with manually actuated valve on top of dump assembly with quick release pin to allow for folding down handle. Includes integral swivel chute with manual extension.	$5,060
4450-0196	Slip-on stainless steel dump extension chute.	$874
4450-0197	6" Rear Jet Dump 36" Extension Chute w/6" Female Cam Lock.	$926
4450-0199	Reverse push/pull handle on 3" tank to pump Akron manual valve. The "in" position will be open and the "out" position will be closed.	$57
4450-0201	4" Rear Direct tank fill. Includes Fireman Friend 4" valve with 5" Storz elbow adapter and cap. Located to [#LOC] of the rear body	$2,823
4450-0202	Rear tank dumps. Includes stainless steel assembly with electrically actuated valve with flip chute.	$3,893
4450-0203	Rear tank dump. Includes stainless steel assembly with electrically actuated valve. For use with slip on extension and chute.	$2,522
4450-0205	Direct 4" Tank Fill Akron Electric Valve with Dual Control (1) control at the valve and (1) at the pump operator panel. Valve location [#LOC].	$4,662
4450-0206	4" rear direct tank fill. Includes handwheel control, swivel with droop with cap and retainer. Include 3/4" bleeder. Located to [#LOC] of the rear body.	$2,576
4450-0207	2" Tank to Pump Electric Over Air Actuated Valve. (For Pump&Roll Operation)	$1,257
4450-0208	Rear Tank Inlet 3". Includes Water Level Gauge Located in B1 Compartment.	$1,844
4450-0210	2" tank fill Akron electric valve & Navigator Pro 9323 Controller.	$2,720
4450-0211	2.5" Direct Tank Fill "AutoFill" Automatic Tank Fill Valve. Waterous (Auto Fill) shall be "T" into both side 6" intake, front, and rear 5" intake with a special manifold and check valves.	$5,612
4450-0212	Rear tank dump. Includes steel assembly with manually actuated valve on top of dump assembly. Includes integral 6012SW swivel chute with manual telescopic extension and swivel to have seven position lock system.	$3,879
4450-0213	Newton dump switch to have a red flip up cover (or bezel).	$54
4450-0215	2" tank fill Akron Electric Valve & Navigator 9325 controller. Controller only, no flow or pressure reading require.	$2,746
4450-0216	Tank-to-pump 4" Akron electric valve with Navigator 9325 Controller. Controller only, no flow or pressure reading require.	$3,717

4450-0217	2.5" Direct foam tank fill Elkhart Unibody manual valve. Plumbing to be reduced to 2" after the valve. Location: [#LOC].	$1,366
4450-0218	6" Rear Gravity Dump No Valve terminate with 6" NST and cap.	$2,753
4450-0219	Rear tank dump. Includes painted steel assembly with manually actuated valve on top of dump assembly. Includes integral 6012SW swivel chute with manual telescopic extension and swivel to have seven position lock system.	$4,463
4450-0223	4" Rear Direct tank fill. Includes Fireman Friend 4" valve with 4" MNST adapter and cap. Located above lowered B1 compartment in upper smooth plate bolt on panel.	$2,823
4450-0226	4" Rear Direct tank fill w/4" check valve and pipng. Inculde a 4" MNST adapter and cap. Located officer side rear.	$2,110
4450-0228	Rear tank dump. Includes stainless steel assembly with manually actuated valve on top of dump assembly. Includes integral 6012 swivel chute with manual telescopic extension and with locking system.	$5,614
4450-0229	3" Tank Fill Akron Valve Handwheel Control	$2,400
4450-0230	3.5" Tank To Pump Akron Manual Valve w/4" Plumbing.	$1,488
4450-0233	Driver side lower pump panel mounted 2.5" manual direct tank fill. Include check valve.	$2,176
4450-0236	2" Tank Fill Elkhart Unibody Valve Handwheel	$2,252
4450-0237	3" Tank To Pump Elkhart Unibody Manual Valve w/4" Plumbing. Include manual hand wheel control.	$1,883
4450-0238	Tank-to-pump 4" Akron electric valve with Navigator 9323 Controller.	$3,717
4450-0239	Direct 2.5" water tank fill with Akron valve. Location: Officer side rear of steamerl. Control at pump operator panel.	$1,519
4450-0240	5" Rear Jet Dump w/5" Akron Manual Butterfly Valve. Include a 5" Ames female coupler connection.	$3,940
4450-0241	4" rear direct tank fill. Includes handwheel control, with 4" Swivel Storz elbow and cap. Located to officer's side off rear of body	$3,075
4450-0242	6" Rear Gravity Dump with 6" manual hand wheel control valve to terminate with 6" MNST connection with cap..	$4,992
4450-0243	Direct 2.5" Water Tank Fill with Firemen Friend high flow Valve. Location: B1.	$1,577
4450-0248	4" rear direct tank fill. Includes handwheel control, with cap and retainer. Located to the rear body	$2,608
4450-0249	4" rear direct tank fill. Includes handwheel control, swivel with cap. Located to [#LOC] of the rear body.	$2,576
4450-0250	2.5" Direct Tank Fill "Elkhart AutoFill" UBEC1AT Automatic Tank Fill Valve. Location: off driver side MIV intake valve.	$4,858
4455-0004	Gasket Material around all Discharges, Intakes and Handle Slots on Pump Panel to hold in heat of Module Plumbing	$1,003
4460-0000	Air outlet w/snubber valve. Location: [#LOC].	$275
4460-0001	Air blow-out for: [#LOC].	$259
4460-0002	Hose reel blow-out, primary.	$264
4460-0004	All tags installed on the exterior of the apparatus shall be mechanically fastened with stainless steel screws. These include but not limited to tags installed on the pump module, body, cab and bumper.	$1,296
4460-0005	Fire Shop Bezel Chrome - Standard 2.5" Gauge	$40
4460-0006	Radiator Fill Valve on Pump Panel.	$304
4460-0007	Air outlet with snubber valve and 25' hose. Location: [#LOC].	$309
4460-0008	Air Outlet Valve to operate off of CAFS System Compressor. Location: [#LOC].	$380
4460-0009	Pump panel tags, special color. (Must specify.)	$326
4460-0010	Pump panel tags - Special label. (Must specify.)	$278
4460-0017	Class 1 Color Coded Bezel Chrome - 2.5" Gauge.	$26
4460-0018	Class 1 color coded bezel, chrome - 3.5" gauge.	$30
4460-0019	A throttle and switch will be provided and mounted behind pump operator`s panel in a recessed box. The switch will allow the operator to toggle from pressure governor to throttle for emergency. There will be installed a automatic constant pressure relief system that will limit the maximum discharge pressure of the fire pump to 125psi during emergency operation when throttle switch is actuated. A recessed box with a hinged door will be provided and constructed out of stainless steel to house the throttle, throttle select switch.	$2,926
4460-0020	Pump shift override label. Locate on pump control panel. Label to provide instruction on use of the pump shift override	$52
4460-0023	Span Color Coded Bezel - 2.5" Gauge	$10
4460-0024	Span Color Coded Bezel - 3.5" Gauge	$10
4460-0026	CAFS Air Outlet Valve Recess Driver side Pump Panel with door.	$384
4460-0027	Diagramtic vinyl rear mount pump panel labeling of discharges and/or preconnects. Includes rear panel (with hosebed deck gun) and front discharge layouts (two (2) views- No top view).	$1,982
4460-0029	All exterior 1x3, and .1/2x1 tags shall be Vision Mark tags.	$722
4460-0030	L1 forward body compartment pump panel mount. Includes structural build out for panel mount.	$1,763
4460-0031	Attach Escutchion Plates with Thunb Latch on Officer Side.	$190
4460-0032	Push/Pull Rod Extrusion at pump panel to be thru bolted with nuts IPOS nut cert.	$97
4460-0033	CAFS Air outlet .75 valve with Handle and Quick Disconnect. Location: [#LOC]	$428
4460-0037	Fire Shopp NPFA Color Coded "T" handles with color coded tags.	$51
4460-0039	Innovative Controls Color Coded Bezel Chrome - 2.5" Gauge.	$110
4460-0043	Pump panel tags mechanically fastened with screws.	$428
4460-0059	Class 1 color coded bezel gauge trim ring - 2.5" Gauge	$38
4460-0067	Officer side pump panel shall include an access door to provide access to the cab tilt switch and manual jack as mounted.	$201
4460-0069	Class 1 color coded bezel gauge trim ring - 3.5" gauge.	$43
4460-0070	Fire Shop Trim Ring/Collar Chrome w/color code insert - Side Discharge/Intake	$99
4460-0073	Pump Panel Tags 1" x 3" Addition label for each TM Control handles.	$70
4460-0074	Air blow-out for:Frt Jumpline .75" lift lever turn valve IPOS.	$307

4460-0075	Water/Foam Capacity label mounted adjacent to level gauges.	$57
4460-0078	Pump panel tags, special color. #1 -Red Crosslay #2 -Yellow 2" tank fill- Black 3" tank to pump- Black 2.5" Left Intake - Black 2.5 Left rear dis -Blue 3" Deck Gun - Grey 2.5 Left Dis - Pink 2.5 Right Dis- Green 4" Right Dis- Purple.	$326
4460-0083	Pump panel NFPA warning tags, special location.	$47
4460-0084	6" Gauge panel to be tilt outward at the top.	$520
4460-0085	CAFS Air Outlet Valve Recess Driver side Pump Panel with door.	$384
4460-0086	Air blow-out with Innovative Control 1/4" valve w/1/4 turn "T" handle and label for: [#LOC].	$247
4460-0087	Hose reel blow-out, with Innovative Controls 1/4" valve w/1/4 turn handle.	$247
4460-0088	Air outlet with Innovative Control 1/4" valve w/1/4 turn "T" handle and label for: [#LOC].	$247
4465-0003	FRC In-Control pressure governor. Includes engine and master pump gauges.	$5,661
4465-0005	Class 1 Captain pressure governor.	$2,996
4465-0007	Class1 Command Master pressure governor. Includes pump intake pressure and discharge pressure, throttle, relief, tank level(s), water, oil, volt and tachometer.	$5,484
4465-0008	FRC PumpBoss Pressure Governor. Includes engine gauges.	$2,784
4465-0009	FRC Pro-S Pressure Governor	$2,938
4465-0010	FRC In-Control pressure governor TGA200. Includes engine transmission and master pump gauges.	$5,723
4465-0011	Class 1 TPG pressure governor. Includes, water, oil, volt and tachometer.	$2,309
4465-0012	Fire Commander II pressure governor. Includes engine gauges, Pump Ditigal Master Gauges. Detroit engines only.	$5,476
4465-0013	FRC In-Control pressure governor. Includes engine and master pump gauges.The discharge pressure display shall show pressures from 0 to 4000 kPa. The intake pressure display shall show pressures from -100 to 4000 kPa.	$5,661
4465-0015	FRC In-Control pressure governor TGA300. Includes engine, transmission, and master pump gauges.	$4,168
4465-0017	FRC PumpBoss pressure governor PBA400. Includes engine monitor gauges.	$2,784
4465-0018	FRC InControl pressure governor TGA400. Includes engine, transmission, and master pump gauges.	$4,168
4465-0020	Class 1 TPG Plus pressure governor. Includes master intake and discharge gauges, water, oil, volt and tachometer.	$3,084
4465-0021	FRC In-Control pressure governor TGA400-A10. Includes engine, transmission, and master pump gauges.	$4,168
4465-0024	The Pressure Governor as mounted on the pump panel shall include a stainless steel shield/visor to shade the display from direct sunlight (the shield/visor shall share the same painted on finish as the pump panel if applicable).	$156
4465-0028	Class 1 Sentry pressure governor/ Twister throttle. Includes master intake and discharge gauges, water, oil, tran, volt and tachometer.	$2,963
4475-0000	Pump certification 750-2250 GPM	$2,656
4475-0003	Pump certification 750-2250 GPM. To be performed by UL (Underwriter's Laboratories). Stainless steel product only.	$2,656
4475-0004	Pump certification 250-500 GPM	$1,905
4475-0007	Factory pump test only, not thrid party.	$1,905
	ELECTRICAL	
5010-0002	Multiplex electrical system for pumper / tanker / rescue.	$3,587
5010-0003	Multiplex modem kit. Includes cable, modem, and adapter harness.	$940
5010-0004	Multiplex data logger.	$666
5010-0014	Vehicle data recorder for commercial cab - 2009 NFPA compliant. Includes occupant detection with display. Display location: [#LOC].	$1,521
5010-0015	Additional CrewGuard display for use with VDR. Location: [#LOC].	$509
5010-0016	Multiplex electrical system for rear mount pumper.	$4,336
5010-0043	Multiplex 24V electrical system for pumper / tanker / rescue.	$3,587
5010-0046	Diamond Logic Electrical system, base, Wildland	$7,459
5010-0048	Vehicle data recorder for commercial cab - 2009 NFPA compliant. Includes occupant detection with display. VDR will be in installed by Manning Equipment and delivered with chassis.	$113
5010-0053	Vehicle data recorder for commercial cab - 2009 NFPA compliant. Includes occupant detection shown in multiplex display.	$974
5010-0059	VFD Text display for V-MUX electrical system. Location: [#LOC].	$815
5010-0074	Special programming for multiplex color display (per hour). Requires engineering review and approval to determine feasibility and time.	$55
5010-0075	Vista display to have a customized sticker for legend buttons (Reference info in file for new configuration). May require special programming fee.	$545
5010-0076	Vista display to have a non-standard sticker for legend buttons (Reference info in file for existing but non-standard configuration). May require special programming fee.	$104
5010-0078	Link2 Vehicle information system for V-MUX electrical system. Does not include required subscription.	$1,545
5010-0079	Vista display translated to French.	$722
5050-0000	Vanner Bravo 1800 watt inverter. For use with (2) quartz lights. Includes on/off switch in cab. Inverter to be mounted in a body compartment as close to the chassis batteries as practical (20' max cable length).	$2,921
5050-0001	Vanner 2600 watt inverter. For use with quartz lights. Includes on/off switch in cab. Inverter to be mounted in cab below rear wall bench seat.	$4,510
5050-0017	Body 110 volt outlets shall have a dedicated breaker within the breaker box for no more than every (2) body mounted receptacles (single outlet, duplex, etc. as applicable). This is to provide multiple isolated circuits as required that carry no more than (2) receptacles located throughout the body.	$539

5050-0018	Vanner Tru-sine 1000 watt inverter. For use with (4) cab interior receptacles when generator is not running or shoreline is not connected. Includes on/off switch in cab. Inverter to be mounted in a body compartment as close to the chassis batteries as practical (20' max cable length).	$1,966
5050-0019	Inverter prewire for dealer/customer supplied and installed 3KW inverter. Includes 12 volt wiring and A/C cabling to breaker box. Prewire to [#LOC].	$836
5100-0000	Foot switch to control air horns located [#LOC].	$121
5100-0001	Switch circuit three way. Includes (1) additional switch. An additional switch required for more than two locations. Location: [#LOC].	$171
5100-0002	Momentary switch with 6' pendant for cab tilt. Yellow weatherproof push button at end of coiled cord. Location of switch plug-in: [#LOC]	$382
5100-0006	Foot switch to control Q2B located [#LOC].	$121
5100-0007	Foot switch to control electronic siren located [#LOC].	$121
5100-0009	Audible door ajar alarm wired through door ajar light.	$63
5100-0010	Additional push button hose reel switch. Location: [#LOC].	$190
5100-0011	Switch 12V for 120-240V (EA). Location: [#LOC].	$438
5100-0014	Air horns to be interlocked through the master warning switch.	$102
5100-0017	Wire rear amber through ignition switch.	$81
5100-0019	Additional amber warning light override momentary switch located at the cab warning light switch panel. The switch will allow for overriding the rear additional amber warning lights and reset after ignition is turned off.	$329
5100-0021	Opticom switch wired through upper level warning switch.	$77
5100-0022	Push-button hose reel switch. Location: [#LOC].	$190
5100-0029	Stirrup style hose reel switch. Location: [#LOC].	$190
5100-0030	Additional stirrup stlye hose reel switch. Location: [#LOC]	$190
5100-0036	Additional programming instructions: [#LOC].	$127
5100-0037	Master disconnect switch. Fuction or location.[#LOC]	$171
5100-0038	Hose Reel rewind switch located in rubrail.	$97
5100-0039	Foot switch(es) mounted on a 45 degree bracket.	$83
5100-0042	Ramsey control with 3' cord for cab tilt in addition to standard toggle. Red/Black weatherproof push buttons at end of cord. Location of switch plug-in: [#LOC].	$382
5100-0045	Thermostatic controls for pump compt heaters. Thermostat set at freezing temp.	$259
5100-0046	Cut-off switch for Q2B main power. Switch to be accessible from driver's seat.	$279
5100-0047	Switch household 110V w/ weaterproof cover. Location and function: cab mounted next to air compressor for 120V air compressor	$205
5100-0048	Magnetic door ajar switches IPO std for all body compt doors.	$743
5100-0050	Push button test switch for tank or foam level gauge, push button wired "hot" to batteries to allow checking tank level in fire station without having to power up truck electrical system. Located on operator pump panel.	$357
5100-0052	Household toggle switch for 110V. Switch plate will be a Crouse Hinds TP7256. Switch will be wire to top plug of duplex recept on rear, and be located next to recept. One switch for each top duplex.	$450
5100-0056	Hose deployment switch in front bumper tray. Includes hinged plate on bottom of bumper tray with switch on floor and indicator light on pump panel. Requires tray without slats. Location: [#LOC].	$604
5100-0068	Switch button for Q2B siren. Locate on dash control panel area within reach of the [#LOC] position. Label as space permits.	$194
5100-0074	Switch button for Q2B siren brake. Locate on dash control panel area within reach of the [#LOC] position. Label as space permits.	$194
5100-0076	Additional programming instructions: Indicator lights need to be tied into all switch functions.	$127
5100-0086	Additional programming instructions: clear warning lights to remain on in bloking mode in accordance with Maryland Code Allowance.	$127
5100-0087	Ramsey control plug-in for cab tilt in addition to standard toggle. Does not include tether controller. Location: [#LOC].	$215
5100-0088	Linemaster Twin 491-S foot switch to control air horns and Q2B located [#LOC].	$389
5100-0089	Foot switch to control electric fire bell located [#LOC].	$121
5100-0090	Foot switch to control Scream Eagle siren located [#LOC].	$121
5100-0091	Switch 12V for 110-240V (EA). Location: cab switch panel for rear body quartz light(s).	$438
5100-0095	Switching controlled through the Multiplex display for 120-240V devices (EA). The 120-240V Multiplex switching utility shall be used for: [#LOC].	$438
5100-0099	Momentary rocker switch for the Federal Rumbler (secondary siren) located on the driver and officer side overhead panels. The switches will allow for overriding the Federal Signal Rumbler siren and reset after ignition is turned off.	$329
5100-0102	A cab interior audible alarm and hazard light. The light shall be blue in color and 2" diameter, The alarm and hazard light shall be wired to the light tower to provide a clear indicator of when the light tower is raised or not in the bedded position. The light shall be mounted in the vicinity of the door ajar hazard light.	$152
5100-0104	Air horn switch at rear body. Switch to be labeled "Air Horn". Location: driver side rear of body approx. eye level (if applicable).	$144
5100-0106	Thermostatic control for compartment heater. Thermostat set at 60 degrees Fahrenheit to prevent freezing. Location: [#LOC].	$132
5100-0107	Cut-off switch for Q2B main power. Switch to be accessible from officer's seat.	$279
5100-0108	Switch circuit three way 12V for 120-240V (EA). Includes (1) additional 12V for 120-240V switch. An additional switch required for more than two locations. Location: [#LOC].	$438
5100-0109	Audible alarm to sound when water level is below 1/4 tank remaining.	$292
5100-0112	Ramsey control on officer side cab dash with 3' cord to operate Q2B and air horns. Red switch Q2B, Black air horns.	$360
5100-0115	Monarch control for cab tilt in place of standard toggle.	$419
5100-0116	Weldon 4-button V-MUX switch module. Location [#LOC].	$419

5100-0117	Switch, additional momentary 12 volt/15 amp. Location and function: [#LOC].	$205
5100-0118	Door ajar indicator switches for all SCBA air bottle storage compartment doors on body wired to "Door Open" indicator inside cab.	$57
5100-0120	Switch additional guarded toggle. Location and Function: driver side rear of body for rear flood lights.	$205
5100-0125	Door ajar indicator switches for all SCBA air bottle storage compartment doors on cab wired to "Door Open" indicator inside cab.	$57
5100-0127	Switch panel three way. Includes (7) additional switches. An additional switch required for more than two locations. Location: L1 adjacent to breaker box for front brow lights, driver 120V cab/body scene lights, officer 120V cab/body scene lights, driver 12V cab/body scene lights, officer cab/body 12V scene lights and rear 12V scene lights.	$1,194
5100-0128	Red flip cover for toggle switch. Location: [#LOC].	$19
5100-0129	Switch rear door fully open for dump valve power activation.	$372
5100-0130	Weatherproof Eaton rocker switches on pump panel ipo toggle switches.	$235
5100-0131	Foot switch(es) mounted on a 30 degree bracket.	$83
5110-0004	Alternating flasher for headlights.	$350
5110-0005	Pre-wire for trailer hitch. Includes stop, left turn, right turn, marker and ground wires. Does not include connector.	$247
5110-0007	Audible indicator in cab with rear button. The rear button will be located on the driver's side at the rear behind the hand rail (if equipped).	$358
5110-0008	Audible indicator in cab with rear buttons. The rear buttons will be located one each side at the rear, behind the hand rail (if equipped).	$395
5110-0010	Receptacle 12V 175A portable winch. Located at rear near trailer hitch.	$366
5110-0017	Back-up alarm 97 dB.	$106
5110-0018	12 volt 12 gauge constant hot lead (24" long) with ground wire. Location: [#LOC].	$83
5110-0024	Back up alarm Grote 107 dB(A).	$273
5110-0026	12 volt 12 gauge wired through ignition lead (24" long) with ground wire. Location: [#LOC].	$83
5110-0027	Powered equipment rack alarm. To activate while rack is in motion.	$71
5110-0034	4 Pin trailer wiring flat connector. Includes matching plug. Requires trailer wiring pre-wire option.	$97
5110-0040	Indicator light. Color: [#COL]. Location and function: [#LOC].	$119
5110-0041	7 pin trailer wiring connector. Requires trailer wiring pre-wire option.	$129
5110-0042	Trailer wiring and connector for 2009 NFPA 1901 Type I, Type II or Type III trailer. Includes model 12-907 connector on body. Stop/turn/tail circuits shall be connected, remaining wires to be coiled up for future use. Trailer end 12-906 shipped loose.	$477
5110-0043	Back-up alarm Federal Reactor model 210350 self-adjusting.	$186
5110-0046	4 Pin trailer wiring heavy duty round connector. Includes matching plug. Requires trailer wiring pre-wire option.	$107
5110-0052	12V power distribution module. Includes (6) battery hot and (6) switched hot circuits. 100 amps max (IATS). Location: [#LOC].	$317
5110-0060	12 volt 4 gauge constant hot lead (24" long) with ground wire. Location: [#LOC].	$249
5110-0065	Lighted bumper guide (PR). Bores model 848211 located (1) each side of front bumper extension.	$422
5110-0067	Back up alarm Preco 97 dB(A) warble tone.	$277
5110-0068	Handheld flashlight, orange Streamlight Litebox flashlight with vehicle mount system. Location: [#LOC].	$196
5110-0069	Back up alarm ECCO model 410 97 dB(A) grommet mount.	$214
5110-0079	Back up alarm Ecco model SA917 87-112dB.	$243
5110-0082	Receptacle 12V 175A portable winch. There will be a total of four, locate one at each of the receiver.	$1,459
5110-0083	Receptacle 12V 175A portable winch. There will be a total of three, locate one at each of the side and rear receivers.	$1,094
5110-0087	Tekonsha model Prodigy 2 trailer brake controls wired to connector. Control located in cab accessible to driver. Requires 9-pin connector.	$910
5110-0088	Lighted bumper guide (PR) with angled support brackets. Bores model 848211 located (1) each side of front bumper extension.	$546
5110-0089	Back-up alarm Ecco model 575 107dB.	$179
5110-0090	Breaker box grounding cable. 10' 2Ga cable attached to ground side of breaker box. Includes clamp on end of cable for use with aerial ground pad.	$239
5110-0093	Wiring from pump panel mic box to cab (under center seat). Wiring to be shielded 10 conductor cooper. Provide approximately 10' extra within cab coiled and 2' extra coiled at the back of the mic box.	$202
5110-0109	Indicator light, Weldon 9186-2300. Color: [#COL]. Location and function: [#LOC].	$119
5110-0110	Receptacle 12V 175A portable winch. Located at front near receiver.	$366
5110-0112	Back up alarm Preco model 1040.	$185
5110-0114	Powered equipment rack alarm; Preco 97dB(A) warble tone. To activate while rack is in motion and through park brake.	$277
5110-0119	CAT V cable run. This will include CAT V wire, non-plenum. Run cable from microphone box on pump panel to center overhead in cab.	$147
5110-0120	Receptacle 12V 175A portable winch. There will be a total of three, locate one at each of the side and front receivers.	$1,094
5110-0124	Audible indicator in cab with rear buttons. The rear buttons will be located [#LOC].	$395
5110-0125	Receptacle 12V 175A portable winch. There will be a total of (2), locate one (1) on each side near under body receivers.	$731
5110-0133	12 volt 10 gauge constant hot lead (24" long) with ground wire. Location: [#LOC].	$97
5110-0135	Additional wiring overlays to support Whelen 900 series lighting (not OEM installed). Lights shall be installed at a later date. One (1) each side of body on forward upper body corners.	$192
5110-0136	Collision Avoidance Systems model CAS-4RF rear obstacle detection and proximity system. Includes 4 sensors at rear of vehicle and speaker in cab.	$1,929

5110-0137	Additional wiring instructions: All wiring on/at rear tailboard to be raised to not interfere with ground height to rear of unit.	$378
5110-0138	Regen indicator light with warning tag . Whelen 500 series TIR6 amber light located in rubrail above exhaust end. Includes warning tag to read "High Exhaust Heat When Flashing". Light to be wired through indicator in cab and park brake.	$320
5110-0139	12 volt 14 gauge wired through ignition lead (36" long) with ground wire. Location: [#LOC].	$99
5110-0140	12 volt 10 gauge wired through ignition lead terminated in a junction box with ground wire. Location: [#LOC].	$99
5110-0141	TBD	$161
5110-0144	Hopkins 7 pin trailer wiring connector model 48495-7 RV blade. Requires trailer wiring pre-wire option.	$133
5110-0145	Pre-Wiring for trailer hitch should include a hot 12vdc and back-up light wire at the connector and a wire from the connector to the cab for future electric brake unit in cab. In the cab there should be a wire labeled for brake lights to connect to future electric brake unit. Connector sold separately.	$247
5110-0146	Cole-Hersee trailer tail light converter model 48000. Trailer connector sold separately.	$324
5110-0149	Generator power shall be supplied to the command desk area. One (1) 12/3 cable shall supply 20 amps with 10' of wire coiled at the command desk area. The wires shall be clearly marked to identify them as 110V/20A generator power.	$359
5110-0150	Shoreline power shall be supplied to the command desk area. One (1) 12/3 cable shall supply 20 amps with 10' of wire coiled at the command desk area. The wires shall be clearly marked to identify them as 110V/20A shoreline power.	$359
5110-0153	12V power distribution module. Includes (6) battery hot and (6) switched hot circuits. 100 amps max (IATS). Includes circuit breakers ipo fuses. Location: [#LOC].	$317
5110-0158	12 volt 12 gauge lead (24" long) with ground wire wired to battery saver. Location: [#LOC].	$83
5110-0160	Pollak 7 pin trailer wiring connector model 12-709. Requires trailer wiring pre-wire option.	$192
5110-0169	Aluminum smooth plate cover for foam controller shall be located on back of controller.	$208
5130-0000	Cord reel 150 feet of 12/3 black cord installed on the [#LOC] with an electric rewind.	$1,879
5130-0001	Cord reel electric with 200' of 10/3 black cable. Locate [#LOC].	$2,219
5130-0002	Cord reel electric with 200' of 10/3 yellow cable. Location(s): [#LOC].	$2,505
5130-0003	Cord reel electric with 200' of 10/4 black cable. Location: [#LOC].	$2,499
5130-0004	Cord reel electric with 200' of 10/4 yellow cable. Location [#LOC].	$3,240
5130-0006	Cord reel rollers mounted on reel in [#LOC].	$362
5130-0007	Cord connector. Daniel Woodhead 3 wire NEMA 5-15 straight blade female located on cord for reel in [#LOC].	$84
5130-0008	Cord connector. Daniel Woodhead 3 wire NEMA L5-15 twist lock female located on cord for reel in [#LOC]	$87
5130-0009	Cord connector. Daniel Woodhead 3 wire NEMA L5-20 twist lock female located on cord for reel in [#LOC].	$118
5130-0010	Cord connector. Daniel Woodhead 4 wire NEMA L14-20 twist lock female located on cord for reel in [#LOC].	$118
5130-0011	Cord connector. Daniel Woodhead 3 wire NEMA L6-20 twist lock female located on cord for reel in [#LOC]	$118
5130-0012	Junction box Circle-D with four (4) 3-wire NEMA L5-15 110 volt 15 amp twist lock receptacles. Located on cord for reel in [#LOC].	$765
5130-0013	Junction box Circle-D with four (4) 3-wire NEMA L5-20 110 volt 20 amp twist lock receptacles. Located on cord for reel in [#LOC].	$765
5130-0014	Circle D wall/floor mounting box. Locate box for use with reel in or on [#LOC].	$150
5130-0015	Junction box Circle-D with two (2) 15 amp straight blade and two (2) 20 amp twist lock receptacles. Located on cord for reel in [#LOC].	$966
5130-0016	Junction box Circle-D with all twist lock, 2-120V and 2-240V outlets. Located on cord for reel in [#LOC].	$946
5130-0017	Junction box Woodhead with four (4) NEMA L5-15 110 Volt 15 Amp twist lock receptacles. Located on cord for reel in [#LOC].	$1,520
5130-0018	Junction box, Daniel Woodhead, with four (4) NEMA L5-20 110 volt 20 amp twist lock receptacles. Located on cord for reel in [#LOC].	$1,215
5130-0019	Cord reel 150 feet of 12/3 yellow cord installed in the [#LOC] with an electric rewind.	$1,948
5130-0022	Cord reel rollers mounted through panel. Location(s): [#LOC].	$362
5130-0024	Electric cord reel rewind switch. Switch located [#LOC].	$121
5130-0026	Cord connector. Fire Power 3 wire 20A/110V female located on cord for reel in [#LOC].	$612
5130-0027	Cord connector. Duraline 4 wire 20A/220V female located on cord for reel in [#LOC].	$161
5130-0028	Cord reel rollers mounted on reel.	$362
5130-0029	Pre-wire from breaker box to roof top compartments of L2 and R3 for dealer installed cord reel (10/3). Provide 3' pig tail in forward area of compartments. Include pre-wire for wall mounted rewind switch (dealer installed). Provide enough wire from roof top compartment to below body in case customer goes with foot switch application.	$866
5130-0030	Junction box Circle-D with one (1) straight blade and three (3) twist lock receptacles. Located on cord for reel in [#LOC].	$966
5130-0031	Cord reel electric/manual back-up with 200' of 10/3 black cable. Crank handle mounted next to reel. Locate [#LOC]	$2,666
5130-0032	Cord reel electric with 150' of 10/4 yellow cable. Location [#LOC]	$3,240
5130-0033	Junction box Circle D with four (4) 3-wire NEMA 5-15 110 volt 15 amp straight blade receptacles. Located on cord for reel in [#LOC].	$765
5130-0034	Cord reel Akron electric with 200' of 10/3 yellow cable. Location(s): [#LOC].	$2,392
5130-0035	Junction box Circle-D with (3) L5-15 and (1) L5-20 110Volt twist lock receptacles. Located on cord for reel in [#LOC].	$765
5130-0037	Cord reel Akron electric with 200' of 10/4 yellow cable. Location(s): [#LOC]	$3,130
5130-0038	Junction box Circle-D with (2) L5-20 twist lock and (2) 5-20 110Volt straight blade duplex receptacles. Located on cord for reel in [#LOC].	$765

5130-0039	Roller support bracket up high at compt opening for reel in [#LOC].	$274
5130-0040	Hannay PWM (Pulse Width Modulator) control for reel. Mounted next to switch for cord reel in [#LOC].	$681
5130-0041	Cord reel rollers bracket mounted on top of [#LOC].	$362
5130-0042	Junction box Circle-D with four (4) 3-wire Nema 5-20 110Volt 20 Amp duplex receptacles. Located on cord for reel in [#LOC].	$847
5130-0044	Junction box Akron with (2) 5-20 125v 20 Amp duplex recepts and (2) L5-20 125v 20 Amp twist lock recepts. Located on cord for reel in [#LOC].	$602
5130-0045	Akron model EJB-VMT-TP mounting box. Locate box for use with reel in or on [#LOC].	$294
5130-0046	Junction box Circle-D with one (1) 5-20 straight blade and three (3) L5-20 twist lock receptacles. Box wired as 240v with individual circuit breakers on box. Located on cord for reel in [#LOC].	$966
5130-0048	Junction box Circle-D with (2) NEMA 5-20 120V GFCI duplex and (2) NEMA L6-20 220V twist lock receptacles. Located on cord for reel in [#LOC].	$966
5130-0049	Cord reel electric for 200' of 10/3 cable. Cable not included. Location(s): [#LOC]	$2,241
5130-0053	Electric Cord Reel Levelwind. Device to help evenly wrap cable on reel, for use with straight line pulls only.	$3,653
5130-0054	Cord reel electric with 200' of 8/3 black cable. Locate [#LOC]	$3,801
5130-0055	Cord reel rollers mounted on support bracket. Location(s): [#LOC]	$362
5130-0056	Junction box Woodhead with (3) NEMA L5-15 110 Volt 15 Amp twist lock receptacles and (1) NEMA 5-20 110 Volt 20 Amp household receptacle. Located on cord for reel in [#LOC].	$1,520
5130-0057	Mounting box for Woodhead junction box. Locate box for use with reel in or on [#LOC].	$274
5130-0059	Junction box Circle-D with four (4) FirePower FP11 110Volt 20 Amp receptacles. Located on cord for reel in [#LOC].	$1,246
5130-0061	Cord reel electric with 250' of 10/3 black cable. Locate [#LOC].	$2,618
5130-0062	Junction box Circle-D with (2) 5-20 straight blade and (2) twist lock receptacles; (1) L5-20 and (1) L5-15. Located on cord for reel in [#LOC].	$966
5130-0063	Cord reel electric with 200' of 12/3 black cable. Locate [#LOC].	$2,618
5130-0067	Junction box Akron with (4) 5-20-GFCI 125v 20 Amp duplex recepts. Includes 12" pigtail with L14-20 connector and rubber feet. Located on cord for reel in [#LOC].	$602
5130-0068	Cord reel electric with 200' of 10/3 yellow cable. Location(s): [#LOC].	$2,505
5130-0069	Cord reel electric with 250' of 10/3 yellow cable. Locate [#LOC].	$2,976
5130-0070	Cord connector. Hubbell 4 wire NEMA L14-20 twist lock female located on cord for reel in [#LOC]	$118
5130-0073	Cord reel electric low profile with 200' of 10/3 yellow cable. Location(s): [#LOC].	$3,175
5130-0079	Cord reel electric with 150' of 10/3 yellow cable. Location(s): [#LOC].	$2,300
5130-0080	Junction box Circle-D with four (4) 3-wire NEMA L5-20 110 volt 20 amp GFCI twist lock receptacles. Located on cord for reel in [#LOC].	$966
5130-0081	Cord reel electric model ECR 1620-17-18 with 200' of 10/4 yellow cable. Location [#LOC].	$3,240
5130-0082	Cord connector. Daniel Woodhead 3 wire NEMA L5-30 twist lock female located on cord for reel in [#LOC].	$166
5130-0083	Slideout cord reel roller assembly. For cord reel located in [#LOC].	$1,006
5130-0084	Junction box Circle-D with one (1) 15 amp straight blade and three (3) 15 amp twist lock receptacles. Located on cord for reel in [#LOC].	$966
5130-0087	Cord connector. Daniel Woodhead 4 wire NEMA L14-30 twist lock female located on cord for reel in [#LOC].	$166
5130-0088	Junction box Woodhead with two (2) NEMA L5-20 110V 20A twist lock and two (2) NEMA 5-20 110V 20A duplex receptacles. Located on cord for reel in [#LOC].	$1,380
5130-0091	Roller support bracket for reel. Rollers and bracket shall be mounted: [#LOC].	$274
5130-0093	Cord reel electric. Chrome / stainless with 200' of 10/3 yellow cable. Location(s): [#LOC].	$2,673
5130-0094	Cord reel electric with 200' of 10/3 black cable model ELFCR1622-14-16. Locate [#LOC].	$2,219
5130-0096	Cord reel electric model ECR 1624-14-15 with 200' of 10/4 yellow cable. Location [#LOC].	$3,240
5130-0101	Cord reel electric with 150' of 10/4 yellow cable. Reel to include strap (Comet) brake to provide drag pressure to reel axle. Location [#LOC]	$3,321
5130-0102	Junction box Circle-D with four (4) 3-wire 120Volt 20 Amp Hubbel model HBL7310B twist lock receptacles. Located on cord for reel in [#LOC].	$966
5130-0103	Junction box Circle-D with four (4) 3-wire NEMA L5-20 110 volt 20 amp GFCI twist lock receptacles with 220V feed. Located on cord for reel in [#LOC].	$966
5130-0104	Cord reel electric with 150' of 10/4 black cable. Location: [#LOC].	$2,043
5130-0105	Cord reel electric CMW 6020 with 200' of 10/3 yellow cord. Location: [#LOC].	$6,064
5130-0107	Cord reel electric with 200' of 12/3 yellow cable. Locate [#LOC].	$2,689
5130-0108	Cord reel electric with 150' of 10/4 yellow cable. Reel has 3 conductor cover IPO 4 (for narrower reel). Location: [#LOC].	$3,240
5130-0109	Junction box Circle D with four (4) 3-wire 20 amp receptacles, two (2) twist lock NEMA L 5-20 and two (2) straight blade NEMA 5-20 receptacles. Located on cord for reel in [#LOC].	$824
5130-0111	Stirrup style cord reel rewind switch. Location: [#LOC].	$190
5130-0112	Junction box Akron with (3) NEMA L5-20 GFCI twistlock and (1) NEMA L6-20 220V twist lock receptacle. Located on cord for reel in [#LOC].	$705
5130-0114	Hydraulic/Air reel rollers mounted through panel. Location(s): [#LOC].	$362
5130-0115	Junction box Akron with (2) NEMA L5-15 GFCI twistlock and (2) NEMA L14-20 120V/240V twist lock receptacle. Located on cord for reel in [#LOC].	$705
5130-0116	Optional Comet (friction) brake for Hannay cord reel (EA).	$75
5130-0120	Cord reel electric painted black from manufacturer with 200' of 10/3 black cable. Locate [#LOC].	$2,219
5130-0122	Cord connector. Hubbell 3 wire NEMA L5-15 twist lock female with yellow seal-tite cover located on cord for reel in [#LOC].	$137
5130-0124	Junction box Circle-D with (3) L5-20 twist lock and (1) 5-20 110V straight blade duplex receptacles. Located on cord for reel in [#LOC].	$765
5130-0125	Cord reel Hannay electric low profile with 200' of 10/3 black cable. Locate [#LOC].	$2,864
5130-0126	Junction box Circle-D with (1) L5-20 twist lock and (3) 5-15 110Volt straight blade duplex receptacles. Located on cord for reel in [#LOC].	$765

5130-0127	Cord reel electric with 175' of 10/3 yellow cable. Location [#LOC].	$3,240
5150-0003	Weldon auxiliary turn signal model 9186-8560 (PR). Location: [#LOC]	$214
5150-0006	Whelen 600 series LED horizontal mount tail lights. Includes LED stop/tail, arrow turn and halogen back-up lights with horizontal Cast 3 housing and weatherproof connectors.	$1,390
5150-0007	Whelen 600 series LED vertical mount tail lights. Includes LED stop/tail, arrow turn and halogen back-up lights with vertical Cast 3 housing and weatherproof connectors.	$1,358
5150-0008	Whelen 600 series LED vertical mount tail lights. Includes LED stop/tail, arrow turn and halogen back-up lights with vertical Cast 4 housing and weatherproof connectors.	$1,661
5150-0010	Whelen 600 series LED horizontal mount tail lights. Includes LED stop/tail, turn and halogen back-up lights. Available on G067, L193 and Q100/114 only. With weatherproof connectors.	$1,493
5150-0011	Whelen 600 series LED vertical mount tail lights. Includes LED stop, tail, turn and halogen back-up lights with vertical Cast 3 housing and weatherproof connectors.	$1,463
5150-0012	Whelen 600 series LED vertical mount tail lights. Includes LED stop/tail, turn and halogen back-up lights with vertical Cast 4 housing and weatherproof connectors.	$1,559
5150-0013	Whelen 600 series horizontal mount taillights. Includes incandescent stop/tail, arrow turn and halogen backup light. Available on G067 and L193 only. With weatherproof connectors.	$655
5150-0015	Whelen 600 series vertical mount taillights. Includes incandescent stop/tail, arrow turn and halogen backup lights with vertical Cast 4 housing and weatherproof connectors.	$756
5150-0017	License plate light LED with chrome housing located at the rear of the body.	$141
5150-0018	Marker lights additional amber LED Trucklite Model 21 (PR). Location: [#LOC]	$181
5150-0019	Marker lights addtional red LED Trucklite Model 21 (PR). Location: [#LOC]	$181
5150-0020	Weldon model 1010 LED / incandescent tail lights. Includes red LED stop/tail/turn and clear incandescent back-up.	$392
5150-0022	Marker light LED body package. Commercial pumper bodies only.	$828
5150-0023	Weldon Model 1010 LED / incandescent tail lights. Includes red LED stop/tail, amber LED turn and clear incandescent back-up.	$569
5150-0025	Marker light LED body/cab package. E-One custom cab and pumper or tanker body only.	$1,389
5150-0032	Bracket license plate at rear of body.	$41
5150-0035	Trucklite LED taillights. Includes 4" red LED stop/tail, amber LED turn and clear incandescent backup.	$690
5150-0036	Truck-Lite LED tail lights. Includes 4" red LED stop/tail, amber LED turn and clear LED back-up.	$876
5150-0037	Zico backing light (PR) with white pained housing model #ZQL-RV-H7614. Location: [#LOC].	$411
5150-0039	Marker lights Britax amber/red rubber housed mounted on the rear body corners angled down.	$308
5150-0042	Federal Signal LED tail lights. Includes 4" diameter red LED stop/tail, amber turn and LED clear back-up.	$596
5150-0050	Zico backing lights (PR) with polished stainless steel housing model ZQL-SS-H7614. Location: [#LOC].	$634
5150-0052	Code 3 65STK4 vertical mount tail lights. Includes red LED stop/tail, amber LED turn and white LED back-up lights.	$2,116
5150-0053	Code 3 65PKG vertical mount tail lights. Includes red LED stop/tail, amber arrow LED turn and white LED back-up lights.	$1,723
5150-0054	Whelen 600 series LED vertical mount taillights. Includes LED stop/tail, turn and backup lights with vertical Cast 4 housing and weatherproof connectors.	$1,994
5150-0055	Whelen 600 series LED horizontal mount tail lights. Includes LED stop/tail, arrow turn and back-up lights with horizontal Cast 3 housing and weatherproof connectors.	$2,198
5150-0056	Whelen 600 series LED vertical mount tail lights. Includes LED stop/tail, arrow turn and back-up lights with vertical Cast 3 housing and weatherproof connectors.	$2,167
5150-0057	Whelen 600 series LED vertical mount tail lights. Includes LED stop/tail, arrow turn and back-up lights with vertical Cast 4 housing and weatherproof connectors.	$2,470
5150-0058	Federal Signal QuadraFlare LED vertical mount tail lights. Includes LED stop/tail, arrow turn and back-up lights with vertical Cast 4 housing and weatherproof connectors.	$1,355
5150-0059	Federal Signal QuadraFlare LED vertical mount tail lights. Includes LED stop/tail, arrow turn and back-up lights with vertical Cast 3 housing and weatherproof connectors.	$1,183
5150-0060	Federal Signal QuadraFlare LED vertical mount tail lights. Includes LED stop/tail, turn and back-up lights with vertical Cast 3 housing and weatherproof connectors.	$1,294
5150-0063	Double chrome trim ring for Weldon 1010 tail lights (PR).	$286
5150-0066	Marker light LED body/cab package. E-One custom cab and pumper or tanker body only. Model 10 front marker lights mounted on top of cab.	$1,637
5150-0067	Code 3 45BZR light (single). Locate surface mounted below rear traffic advisor. Wire light to activate with rear brake lights.	$485
5150-0068	Marker lights Britax LED amber/red rubber housed mounted on the rear body corners angled down.	$421
5150-0071	Light Whelen model PSR00XRR LED (EA) red 3rd brake light. Location: [#LOC].	$203
5150-0073	Marker lights additional red LED Whelen Model 50R00MRR (PR). Location: [#LOC]	$262
5150-0074	Marker lights additional amber LED Whelen Model 50A00MAR (PR). Location: [#LOC]	$262
5150-0075	Whelen 600 series LED vertical mount taillights. Includes LED stop/tail, arrow turn and backup lights with individual chrome flanges and weatherproof connectors.	$2,929
5150-0076	Whelen 700 LED auxiliary chevron turn signal (PR) with 15 degree castings. Location: [#LOC]	$766
5150-0077	Whelen 900 series LED tail lights. Includes LED stop/tail, arrow turn and back-up lights with weatherproof connectors.	$5,282
5150-0080	Weldon auxiliary turn signal model 9186-8580 LED (PR). Location: [#LOC].	$292
5150-0081	Light Whelen 500 model 5SR00XRR red LED 3rd brake light (ea). Location: [#LOC].	$229
5150-0082	Whelen 600 series LED vertical mount taillights. Includes LED stop/tail, arrow turn in vertical Cast 3 housing with 900 series halogen backup lights down low and weatherproof connectors.	$1,804
5150-0085	Marker light Weldon LED body package. Commercial pumper bodies only.	$725
5150-0098	Truck-Lite auxiliary turn signal model 60117Y LED (PR) with model 60719 stainless steel cover. Location: [#LOC].	$279
5150-0099	LED marker light cab and body package. E-ONE custom cab and SS body vehicles.	$1,389

5150-0100	Marker light LED body package. Commercial chassis with SS pumper body vehicles.	$828
5150-0101	Whelen M9 series LED taillights. Includes LED stop/tail, arrow turn and backup lights with weatherproof connectors.	$3,607
5150-0104	Pair of dual headlights (Hi/Low) with bezel. Locate on extended front bumper as far outboard as possible (recess mounted to protect lights). Lights are IPO commercial chassis bumper mounted lighting.	$520
5150-0120	Whelen 600 LED auxiliary arrow turn signal (PR) with 15 degree castings. Location: [#LOC].	$698
5150-0122	Marker lights addtional red LED Trucklite Model 15 (PR). Location: [#LOC].	$107
5150-0123	Marker lights addtional amber LED Trucklite Model 15 (PR). Location: [#LOC].	$107
5150-0126	Marker light LED cab package. E-One custom cab only.	$797
5150-0127	Whelen M6 series LED vertical mount tail lights. Includes LED stop/tail, arrow turn lights with vertical 3 light housing (PR) with M9LZC Super LED scene lights (PR), with chrome flanges and weatherproof connectors.	$2,696
5150-0130	License plate light LED with chrome housing located at the rear of the body driver side down low.	$141
5150-0133	License plate light LED with chrome housing located at the rear of the body below B1 entry door.	$141
5150-0134	License plate light incandescent with chrome housing located at the rear of the body.	$141
5150-0147	Whelen 600 series LED vertical mount tail lights. Includes LED stop/tail, arrow turn and halogen back-up lights with individual chrome flanges and weatherproof connectors.	$2,120
5150-0148	Bracket license plate at rear of body. Fabricated from .125" smooth plate aluminum painted job color.	$50
5150-0149	License plate light incandescent with chrome housing located at the rear of the body below tailboard.	$58
5150-0150	Weldon LED vertical mount tail lights. Includes LED stop, tail,l turn and halogen back-up lights with vertical 4 housing and weatherproof connectors.	$1,990
5150-0152	Federal Signal QuadraFlare LED vertical mount tail lights. Includes LED stop/tail, arrow turn and back-up lights with individual chrome bezels and weatherproof connectors.	$1,124
5150-0154	License plate light EON LED located at the rear of the body.	$118
5150-0155	Whelen 600 series LED vertical mount taillights. Includes LED stop/tail, arrow turn and backup lights with individual black flanges and weatherproof connectors.	$2,369
5150-0156	Marker lights Britax model L428 LED amber/red rubber housed (PR). Location: [#LOC].	$421
5200-0000	Breaker box 8 place single phase. Includes main breaker. Note: Main breaker occupies 2 places leaving 6 available. Locate [#LOC].	$889
5200-0001	Breaker box 12 place single phase. Includes main breaker. Note: If gen is 6KW or less, main will occupy 2 places leaving 10 available. Locate [#LOC].	$929
5200-0002	Breaker Box 20 Place Single Phase. Includes main breaker. Locate [#LOC].	$946
5200-0003	Breaker box 2 place single phase (70A 110/220V). Location [#LOC].	$396
5200-0008	Breaker box 16 place single phase. Includes main breaker. Locate [#LOC].	$933
5200-0009	Breaker box 8 place single phase; no main breaker. For use with multiple options wired through shoreline power with 30A or larger inlet recept. Locate adjacent to main breaker box.	$693
5250-0003	Generator Onan 6KW diesel. Requires fuel pick up option in chassis and 3rd party testing. Generator location: [#LOC].	$15,922
5250-0005	Generator Onan 6KW hydraulic. Includes generator control / PTO engage switch and a gauge panel located adjacent to breaker box. Generator location: [#LOC].	$13,618
5250-0006	Generator Onan 8KW hydraulic. Includes generator control/PTO engage switch and a gauge panel located adjacent to circuit breaker box. Generator location: [#LOC].	$15,327
5250-0007	Generator Onan 10KW hydraulic. Includes generator control / PTO engage switch and a gauge panel located adjacent to breaker box. Generator location: [#LOC].	$15,915
5250-0008	Generator Harrison 15KW MPC hydraulic. Includes generator control / PTO engage switch and a gauge panel located adjacent to breaker box. Generator location: [#LOC].	$26,384
5250-0012	Generator Onan 15KW hydraulic. Includes generator control/PTO engage switch and a gauge panel located adjacent to circuit breaker box. Generator location: [#LOC].	$22,986
5250-0013	Generator Onan 20KW hydraulic. Includes generator control / PTO engage switch and a gauge panel located adjacent to breaker box. N/A on units with a water pump due to frequency fluctuations. Generator location: [#LOC].	$37,687
5250-0017	Generator Honda EM5000SXK with 4.5KW continuous output. Generator location: [#LOC].	$6,446
5250-0026	Generator Smart Power 10KW hydraulic model ER110. Includes generator control / PTO engage switch and a gauge panel located adjacent to breaker box. Generator location: [#LOC].	$18,155
5250-0036	Generator Smart Power 6KW hydraulic model HR-6 (with top mount cooler). Includes generator control / PTO engage switch and a gauge panel located adjacent to breaker box. Generator location: [#LOC].	$14,459
5250-0037	Generator Smart Power 8KW hydraulic model HR-8 (with top mount cooler). Includes generator control/PTO engagement switch and a gauge panel located adjacent to the circuit breaker box. Generator location: [#LOC].	$16,523
5250-0038	Generator Smart Power 10KW hydraulic model HR-110 (with top mount cooler). Includes generator control / PTO engage switch and a gauge panel located adjacent to breaker box. Generator location: [#LOC].	$18,155
5250-0039	Generator Harrison 10KW MCR hydraulic. Includes generator control / PTO engage switch and a gauge panel located adjacent to breaker box. Generator location: [#LOC].	$17,178
5250-0040	Generator Harrison 6KW MCR hydraulic. Includes generator control / PTO engage switch and a gauge panel located adjacent to breaker box. Generator location: [#LOC].	$13,380
5250-0042	Generator Westerbeke 5KW diesel (model#5.0 BCDB). Requires fuel pick up option in chassis and 3rd party testing. Generator location: [#LOC].	$16,464
5250-0043	Dealer installed generator. Option includes space only. Dealer responsible for NFPA required 3rd party generator testing.	$314
5250-0047	Generator Smart Power 15KW hydraulic model HR-15 (with top mount cooler). Includes generator control / PTO engage switch and a gauge panel located adjacent to breaker box. Generator location: [#LOC].	$24,150

5250-0050	Generator Smart Power 20KW hydraulic model HR-20 (with top mount cooler). Includes generator control / PTO engage switch and a gauge panel located adjacent to breaker box. Generator location: [#LOC].	$26,552
5250-0051	Locate generator gauge panel on pump operators panel ipo next to breaker box.	$127
5250-0054	Generator Onan 7.5KW diesel. Requires fuel pick up option in chassis and 3rd party testing. Generator location: [#LOC].	$14,269
5250-0055	Generator Smart Power 8KW hydraulic model ER8. Includes generator control / PTO engage switch and a gauge panel located adjacent to breaker box. Generator location: [#LOC]	$19,565
5250-0060	Dealer installed Onan 6KW diesel generator located [#LOC]. Option includes space only. Dealer responsible for NFPA required 3rd party generator testing.	$314
5250-0061	Dealer installed Onan 6KW hydraulic generator located [#LOC]. Option includes space only. Dealer responsible for NFPA required 3rd party generator testing.	$314
5250-0062	Dealer installed Onan 8KW hydraulic generator located [#LOC]. Option includes space only. Dealer responsible for NFPA required 3rd party generator testing.	$314
5250-0063	Dealer installed Onan 10KW hydraulic generator located [#LOC]. Option includes space only. Dealer responsible for NFPA required 3rd party generator testing.	$314
5250-0064	Dealer installed Onan 15KW hydraulic generator located [#LOC]. Option includes space only. Dealer responsible for NFPA required 3rd party generator testing.	$314
5250-0065	Dealer installed Onan 20KW hydraulic generator located [#LOC]. Option includes space only. Dealer responsible for NFPA required 3rd party generator testing.	$314
5250-0066	Dealer installed Smart Power 10KW hydraulic model ER110 generator located [#LOC]. Option includes space only. Dealer responsible for NFPA required 3rd party generator testing.	$314
5250-0067	Dealer installed Smart Power 10KW hydraulic model HR110 generator located [#LOC]. Option includes space only. Dealer responsible for NFPA required 3rd party generator testing.	$314
5250-0068	Dealer installed Smart Power 6KW hydraulic model HR-6 (with top mount cooler) generator located [#LOC]. Option includes space only. Dealer responsible for NFPA required 3rd party generator testing.	$314
5250-0069	Dealer installed Smart Power 8KW hydraulic model HR-8 (with top mount cooler) generator located [#LOC]. Option includes space only. Dealer responsible for NFPA required 3rd party generator testing.	$314
5250-0070	Dealer installed Smart Power 15KW hydraulic model HR-15 (with top mount cooler) generator located [#LOC]. Option includes space only. Dealer responsible for NFPA required 3rd party generator testing.	$314
5250-0071	Dealer installed Smart Power 20KW hydraulic model HR-20 (with top mount cooler) generator located [#LOC]. Option includes space only. Dealer responsible for NFPA required 3rd party generator testing.	$314
5250-0072	Dealer installed Harrison 6KW MCR hydraulic generator located [#LOC]. Option includes space only. Dealer responsible for NFPA required 3rd party generator testing.	$314
5250-0073	Dealer installed Harrison 10KW MCR hydraulic generator located [#LOC]. Option includes space only. Dealer responsible for NFPA required 3rd party generator testing.	$314
5250-0074	Dealer installed Harrison 30KW MPC hydraulic generator located [#LOC]. Option includes space only. Dealer responsible for NFPA required 3rd party generator testing.	$314
5250-0077	Generator Harrison 8KW MCR hydraulic. Includes generator control / PTO engage switch and a gauge panel located adjacent to breaker box. Generator location: [#LOC].	$16,991
5250-0078	Generator Smart Power 10KW hydraulic Liberator model Li15 (with top mount cooler and XRT hyd tool pump). Includes generator control / PTO engage switch and a gauge panel located adjacent to breaker box. Generator location: [#LOC].	$28,060
5250-0080	Dealer installed 5KW gas generator located [#LOC]. Option includes space only. Dealer responsible for NFPA required 3rd party generator testing.	$314
5250-0092	Generator Honda EM5000SXK with 4.5KW continuous output. NFPA rated at 3.3KW. Generator location: [#LOC].	$5,840
5250-0094	Harrison gas powered 5.5KW generator. Includes alternator duct and attached fuel tank. Locate in compartment [#LOC].	$4,432
5250-0095	Harrison gas powered generator model DBR5500. Includes remote start at pump operator panel, alternator duct and attached fuel tank. Locate in: [#LOC].	$4,882
5250-0106	Westerbeke 10KW BTDAR diesel single phase generator and XRT Hydraulic tool system with 3 tool capability. 10,500 PSI system. Includes selector valve for each reel, hyd res / filter and remote cooler. Requires fuel pick up option in chassis and 3rd party testing. Locate in dunnage pan offset to officer side. Route (4) lead lines to B1 compt.	$48,783
5250-0111	Westerbeke 10KW BTDAR diesel single phase generator and XRT Hydraulic tool system with 2 tool capability. 10,500 PSI system. Includes selector valve for each reel, hyd res / filter. Requires fuel pick up option in chassis and 3rd party testing. Locate in [#LOC]. Route (4) lead lines to B1 compt.	$48,783
5250-0115	Generator Harrison 15KW MPC hydraulic w/IHT. Includes tool circuit manifold, aux heat exchanger, generator control / PTO engage switch and a gauge panel located adjacent to breaker box. [#LOC]	$35,412
5250-0116	Dealer installed Powertech 8KW diesel generator located [#LOC]. Option includes space only. Dealer responsible for NFPA required 3rd party generator testing.	$314
5250-0118	Generator Harrison 8KW LPG hydraulic. Includes generator control switch to engage the PTO and start the generator and a gauge panel located adjacent to breaker box. Generator location: [#LOC].	$16,673
5250-0123	Generator Honda EM4000 with 3.5KW continuous output. NFPA rated at 3.3KW. Generator location: [#LOC].	$5,840
5250-0124	Generator Smart Power 6KW hydraulic model LR-6 Light Rescue Series (FORD 250, 350, 450, 550 Chassis). Includes generator control / PTO engage switch and a gauge panel located adjacent to breaker box. Generator location:[#LOC].	$15,297
5250-0125	Generator Harrison 10KW LPG hydraulic. Includes generator control/PTO engage switch and a gauge panel located adjacent to breaker box. Generator location: [#LOC].	$17,178

5250-0128	Generator Smart Power 15KW hydraulic Liberator model Li20 (with top mount cooler and XRT hyd tool pump). Includes generator control switch and a gauge panel located adjacent to breaker box. Generator location: [#LOC].	$32,749
5250-0129	Generator Harrison 8KW MDS hydraulic. Includes generator control/PTO engage switch, gauge panel located adjacent to breaker box and 80cc hyd pump (requires driver side port on EVS3000 trans). Generator location: [#LOC].	$21,211
5250-0130	Generator Harrison 6KW MDS hydraulic w/IHT for continuous accessory. Includes aux hyd system manifold, integral aux heat exchanger, generator control / PTO switch, aux system / PTO switch, (both switches accessible by driver) and a generator gauge panel located adjacent to breaker box. Generator location: [#LOC].	$26,676
5250-0131	Generator toggle switch (IPOS keyed switch). Located: [#LOC].	$205
5250-0132	Generator Harrison 8KW MDS hydraulic w/IHT for continuous accessory. Includes aux hyd system manifold, integral aux heat exchanger, generator control / PTO switch, aux system / PTO switch (both switches accessible by driver), and a generator gauge panel located adjacent to breaker box. Generator location: [#LOC].	$28,698
5250-0133	Generator Harrison 10KW MDS hydraulic w/IHT for continuous accessory. Includes aux hyd system manifold, integral aux heat exchanger, generator control / PTO switch, aux system / PTO switch (both switches accessible by driver), and a generator gauge panel located adjacent to breaker box. Generator location: [#LOC].	$29,830
5250-0134	Generator Harrison 6KW LPG hydraulic with remote mounted reservoir. Includes generator control / PTO engage switch and a gauge panel located adjacent to breaker box. Generator location: [#LOC].	$17,552
5250-0135	Generator Harrison 10KW MCR hydraulic w/IHT for continuous accessory. Includes aux hyd system manifold, aux heat exchanger, generator control / PTO switch, aux system / PTO switch, (both switches accessible by driver) and a generator gauge panel located adjacent to breaker box. Generator location: [#LOC].	$26,988
5250-0137	Generator Harrison 10KW LPG hydraulic with remote reservoir. Includes generator control/PTO engage switch and a gauge panel located adjacent to breaker box. Generator location: [#LOC].	$17,178
5250-0138	Generator Smart Power 20KW hydraulic Liberator model Li25 (with top mount cooler and XRT hyd tool pump). Includes generator control switch, guarded PTO switch and a gauge panel located adjacent to breaker box. Generator location: [#LOC].	$39,961
5250-0139	Dealer installed Westerbeke 8W diesel generator located dunnage pan offset to officer side. Option includes space only. Dealer responsible for NFPA required 3rd party generator testing.	$314
5250-0141	Generator Smart Power 6KW hydraulic model ER6. Includes generator control / PTO engage switch and a gauge panel located adjacent to breaker box. Generator location: [#LOC].	$14,459
5250-0142	Generator Harrison 6KW LPG hydraulic. Includes generator control / PTO engage switch and a gauge panel located adjacent to breaker box. Generator location: [#LOC].	$17,552
5250-0143	Generator Onan 8KW hydraulic 50 Hz. Includes generator control/PTO engage switch and a gauge panel located adjacent to circuit breaker box. Generator location: [#LOC].	$15,915
5255-0001	3rd party generator test with pump.	$95
5260-0000	Generator air deflector for Onan hydraulic. When generator is compartment mounted or mounted in a pan on an aerial body, engineering is to specify updraft or downdraft.	$465
5260-0001	Remote start for diesel generator. Location: [#LOC].	$438
5260-0002	Remote control starting kit for Honda EM3800SX, EM4000, EM5000SX and EM6500SX generators. Locate [#LOC].	$757
5260-0004	Generator prewire for dealer supplied and installed 5 KW portable generator. Includes 12 volt wiring and cable between breaker box. Prewire to [#LOC].	$284
5260-0006	Compartment door(s) of compartment mounted generator to have interlock.	$213
5260-0008	Generator prewire for dealer supplied and installed 6.5KW portable generator. Includes 12volt wiring and cable between breaker box. Prewire to [#LOC].	$348
5260-0009	Generator oil drain valve with tube extending below driver side pump panel.	$222
5260-0017	Compartment door(s) of compartment mounted compressor to have interlock.	$213
5260-0019	The exhaust of the gas generator to be routed downward and to the exit to below the unit to the officer side of the unit.	$282
5260-0020	Compartment door(s) of compartment mounted electric dump valve to have interlock.	$213
5260-0023	Generator platform to raise the generator up 8" in the storage pan. Generator raised due to heat from generator exhaust.	$421
5260-0024	Locate generator gauge panel on the pump operators panel in lieu of standard location adjacent to breaker box.	$127
5260-0025	Generator prewire for dealer supplied and installed 3.5 KW portable generator (Honda or other with equivalent dimensions). Includes 12 volt wiring and A/C cabling to breaker box. Prewire to [#LOC].	$284
5260-0034	Vertical exhaust for Harrison MCR and MPC generators 6KW - 20KW.	$538
5260-0037	Generated auxiliary 12V power system wired through diesel generator. System includes (3) Power Max 100A 12V converters to power VMUX electrical system. Generator not included (engine off but ignition must be in "on" posiion). Requires Engineering review for generator and 12V power requirements.	$6,744
5260-0042	Compartment door(s) on officer side to be interlocked with ladder rack.	$213
5260-0046	Generator prewire for dealer supplied and installed 2KW portable generator. Includes 12 volt wiring and cable between breaker box. Prewire to [#LOC].	$314
5260-0047	Aesthetic shield for hydraulic generator on outboard end of dunnage pan. To be 3-sided, open top, and constructed from diamond plate.	$465
5300-0000	Light bar Code 3 model XL5100 (PR) 22" Long. All red lens. Location: [#LOC]	$1,294
5300-0003	Light bar Code 3 model 556A3 56" long with all red lenses. Location: Centered on the front cab roof	$1,780
5300-0004	Light bar Code 3 model 718A1 (PR) 18" Long. Red Upper / Clear Lower lens. Location: [#LOC].	$1,459
5300-0017	Light bar Federal Signal Jet Stream 48" LED with R/W/R lenses, red diodes and single traffic clearing light. Location: Centered on the front cab roof	$2,644

5300-0020	Light bar Federal Signal JetStream JLX54HH-00011 54" LED. Red Solaris reflectors with red domes each side and (2) center clear TCL lights. Location: Centered on the front cab roof.	$2,941
5300-0021	Light bar Federal Signal JetSolaris 60" LED. Red Solaris reflectors with clear domes. NFPA compliant. Does not require 2 addl side facing bars. Location: Centered on the front cab roof.	$2,796
5300-0023	Light bars Federal Signal 22I (PR). Location: [#LOC].	$1,168
5300-0024	Light bar Federal Signal Aerodynic 25RQL-Fast 52" with red/clear lens. Location: Centered on the front cab roof.	$1,621
5300-0026	Light bar Federal Signal Aerodynic ADL5202 52" with red/clear/red lens. Location: Centered on the front cab roof.	$1,532
5300-0028	Light bar Federal Signal Aerodynic ADX5271 52" with 10 red Solaris LED reflectors. Location: Centered on the front cab roof	$3,105
5300-0029	Light bar Federal Signal AeroDynic ADX7201 72" with 8 red Solaris LED reflectors. Location: Centered on the front cab roof.	$3,253
5300-0030	Light bar Federal Signal Aerodynic AH1LC 72" with red/clear lens. Location: Centered on the front cab roof.	$1,954
5300-0031	Light bar Federal Signal Aerodynic AH2LC 72" with red/clear lens. Location: Centered on the front cab roof	$2,032
5300-0044	Light bar Federal Signal Vector VC6001. Location: Centered on the front cab roof	$2,293
5300-0049	Light bar Whelen Edge model 9M380NV 66" with MKEZ7 mounts. Location: Centered on the front cab roof	$3,380
5300-0053	Light bar Whelen Freedom model FN66QLED 66" with MKEZ7 mounts. All LED light bar without rear facing LEDs. Location: Centered on the front cab roof.	$4,003
5300-0055	Light bar Whelen Freedom model FN72QLED 72" LED with MKEZ7 mounts and clear lenses. Location: Centered on the front cab roof.	$4,105
5300-0056	Light bar Whelen Freedom model FN72VLED 72" LED with MKEZ7 mounts. N/A INTL Chassis or Vista roofs with front facing windows. Location: Centered on the front cab roof.	$4,105
5300-0084	Whelen Mini-Freedom LED light bars (PR) model FNMINI 24" with red/clear lenses and MKEZ7 mounts. Location: [#LOC].	$4,643
5300-0086	Light bar Code 3 MX model 758A1. Upper deck contains (4) rotators (2 ea side) with red lenses and (2) clear oscilasers. Lower deck contains (2) frt red halogen flashers outboard, intersection sweeps and clear lenses. Loc: Centered on the frt cab roof.	$1,986
5300-0088	Light bar Whelen Freedom model FN55VLED 55" LED with MKEZ7 mounts. N/A with Vista roofs with front facing windows. Location: Centered on the front cab roof.	$3,627
5300-0089	Light bar Code 3 MX model 769A1. Upper deck contains 9 rotators w/ red lenses. Lower deck contains intersection sweeps w/clear lenses. Location: Centered on the front cab roof.	$2,057
5300-0091	Light bar Code 3 Excalibur model X58A. Upper deck contains (4) rotators (two ea side) with red lenses and (2) white oscilasers with clear lenses. Lower deck contains (4) takedown lights and two alley lights. Location: Centered on the front cab roof.	$2,256
5300-0092	Light bar Whelen Freedom model FN55QLED 55" LED with takedown lights and MKEZ7 mounts. Location: Centered on the front cab roof.	$3,930
5300-0093	Light bar Whelen Freedom model FN72VLED 72" LED with Opticom and MKEZ7 mounts. N/A INTL Chassis or Vista roofs with front facing windows. Location: Centered on the front cab roof.	$6,871
5300-0095	Light bar Code 3 MX model 769 with R/C/C/C/B lenses. Upper deck contains 9 rotators. Lower deck contains intersection sweeps w/clear lenses. Location: Centered on the front cab roof.	$2,057
5300-0096	Light bar Code 3 Javelin LED model JX67A. Location: Centered on the front cab roof.	$6,904
5300-0100	Light bar Whelen Freedom model FN72QLED 72" LED with clear lenses and MKEZ7 mounts. Includes (8) red LED and (2) white LED. N/A INTL Chassis. Location: Centered on the front cab roof.	$4,563
5300-0101	Light bar Federal Signal Aerodynic ADL5202 52" with blue lenses. Location: Centered on the front cab roof.	$1,532
5300-0103	Light bar Whelen Freedom model FN66QLED 66" LED with 795H Opticom, takedown lights and MKEZ7 mounts. Location: Centered on the front cab roof.	$5,666
5300-0104	Light bar Whelen Freedom model FN66QLED 66" with MK9 mounts. All LED light bar without rear facing LEDs. Location: Centered on the front cab roof.	$4,003
5300-0105	Light bar Code 3 model 718A1 (PR) 18" Long. Red upper/clear lower lens driver side and blue upper/clear lower officer side. Location: [#LOC]	$1,262
5300-0106	Light bar Code 3 MX model 769 with B/B/C/R/R upper lenses clear lower lenses. Upper deck contains (8) rotators; (4) each side and alley lights. Lower deck contains intersection sweeps, (4) LED warning; (2) blue driver and (2) red officer. Includes pre-wire for opticom in the center of the upper deck. Location: Centered on the front cab roof. Requires 5300-0105.	$3,691
5300-0117	Light bar Code 3 model 729A (PR) 29" long. Red upper / clear lower lens. Location: [#LOC]	$3,698
5300-0118	Light bar Code 3 MX model 769A with R/W/W/W/R upper lenses and clear lower lenses. Upper deck contains (6) rotators and 3-M Opticom. Lower deck contains intersection sweeps, (6) red LED warning and (4) white LED warning. Location: Centered on the front cab roof.	$7,657
5300-0126	Light bar Whelen Freedom model FN72VLED 72" LED with 795H Opticom, (12) red LEDs, (2) clear LEDs and MKEZ7 mounts. N/A INTL Chassis or Vista roofs with front facing windows. Location: Centered on the front cab roof.	$8,407
5300-0127	Light bar Code 3 MX model 758A1. Upper deck contains (2) outer sections each to contain (2) regular rotators (red) and a diamond mirror, (2) inner sections each to contain (1) fast rotator (clear) (2) flat mirrors. Lower deck contains (4) Optix LED modules (red) facing forward and (1) pair Corner intersection lights (clear). Loc: Centered on the frt cab roof between the mini-bars.	$2,580
5300-0137	Light bar Whelen Freedom model FN72VLED 72" LED with Opticom and MKEZ7 mounts. Includes (10) red LED and (2) white LED. N/A INTL Chassis. Location: Centered on the front cab roof.	$7,788
5300-0140	Light bar Whelen Freedom model FN72QLED 72" LED with MK8 high mounts and clear lenses. Includes (10) red LED and (4) white LED. N/A INTL Chassis. Location: Centered on the front cab roof.	$5,770

5300-0142	Light bar Federal Signal JetStream 60" LED. Red/White Solaris reflectors with clear domes. NFPA Compliant, does not require 2 addl side facing bars. Location: Centered on the front cab roof.	$2,961
5300-0151	Light bar Whelen Freedom model FN66VLED 66" with MKEZ7 mounts. All LED light bar. Location: Centered on the front cab roof	$4,003
5300-0154	Light bar Federal Signal JetStream 60" LED. Red Solaris reflectors and red domes with clear center and 3M 792 Opticom. NFPA Compliant, does not require 2 addl side facing bars. Location: Centered on the front cab roof	$7,159
5300-0157	Whelen Mini-Freedom LED light bars (PR) model FNMINI 24" with clear lenses and MKEZ7 mounts. Location: [#LOC].	$4,643
5300-0159	Light bar Federal Signal ADX7202 72" with (6) red, (2) white Solaris LED reflectors and 3M Opticom. Location: Centered on the front cab roof	$5,609
5300-0160	Light bar Federal Signal JetSolaris 60" LED. Red Solaris reflectors with center traffic clearing light. NFPA compliant, does not require 2 addl side facing bars. Location: Centered on the front cab roof.	$2,881
5300-0161	Light bar Whelen Freedom model FN72VLED 72" LED with Opticom and MKEZ7 mounts. Includes (10) red LED, (2) white LED and (2) green LED. N/A INTL Chassis. Location: Centered on the front cab roof.	$8,636
5300-0163	Light bar Whelen Freedom model FN72VLED 72" LED with offset Opticom and MKEZ7 mounts. N/A INTL Chassis or Vista roofs with front facing windows. Location: Centered on the front cab roof.	$6,871
5300-0169	Light bar Whelen Freedom model FN72QLED 72" LED with red lenses and MKEZ7 mounts. Includes (8) red LED and (2) white LED. N/A INTL Chassis. Location: Centered on the front cab roof.	$4,563
5300-0171	Light bar Federal Signal Aerodynic ADL5202 52" with driver red and officer blue lenses. Location: Centered on the front cab roof.	$1,532
5300-0188	Light bar Whelen Freedom model FN72VLED 72" LED with Opticom and MK8 high mounts. N/A INTL Chassis or Vista roofs with front facing windows. Location: Centered on the front cab roof.	$6,919
5300-0192	Light bar Code 3 Model XP9588NFPA1 88" LED. All red with clear lenses. Not available on commercial cabs. Location: Centered on the front cab roof.	$5,084
5300-0195	Light bar Federal Signal JetStream 60" LED. Red driver/Blue officer Solaris reflectors. Location: Centered on the front cab roof	$2,452
5300-0199	Light bar Whelen Freedom model FL2RRRR 72" LED with Opticom and MKEZ7 mounts. Includes (12) red LED. N/A INTL Chassis. Location: Centered on the front cab roof.	$7,760
5300-0202	Light bar Weldon Aero Maxx II 59" LED. NFPA Compliant, does not require 2 addl side facing bars. Location: Centered on the front cab roof	$3,186
5300-0211	Light bar Whelen Freedom model FN60QLED 60" LED with MKEZ7 mounts. Includes (8) red, (2) white and (2) amber modules. Location: Centered on the front cab roof	$5,251
5300-0213	Light bar Code 3 MX model 769NFPA1 with Opticom. Upper deck contains 5 rotators w/ red lenses. Lower deck contains 795H Opticom and intersection sweeps w/clear lenses. Location: Centered on the front cab roof.	$3,450
5300-0217	Light bar Federal Signal AeroDynic ADX7205 72" with 12 red Solaris LED reflectors and 2 traffic clearing lts. Location: Centered on the front cab roof.	$3,760
5300-0237	Light bar Whelen Freedom model FN66QLED 66" with 3M 9592 Opticom (switched on dash panel) and MKEZ7 mounts. All LED light bar without rear facing LEDs. Driver side red lights and officer side to be blue (standard white center) Location: Centered on the front cab roof.	$5,931
5300-0240	Whelen Justice model JE2NFPA 56" with MKEZ7 mounts. All LED (forward facing) light bar.	$674
5300-0259	Light bar Whelen Liberty model SLN2QLED 54" with MK9S mounts. All LED light bar. Location: Centered on the front cab roof	$3,061
5300-0260	Light bar Whelen Freedom 66" LED with 3M Opticom, red lenses and MKEZ7 mounts. Includes (10) red LED and (2) LR11 dual alley lights. Location: Centered on the front cab roof.	$6,480
5300-0266	Light bar Federal Signal Jet Solaris JLX54LL-00009 54" LED. Location: Centered on the front cab roof.	$1,919
5300-0267	Light bar Whelen Justice model JE2NFPA 56" LED with clear lenses and MKEZ7 mounts. N/A on Vista roofs with front facing windows. Includes (4) red corner facing LIN6 LED lights, (6) forward facing CON3 Linear LED lights; (4) red, (2) white. Location: Centered on the front cab roof.	$2,450
5300-0269	Light bar Whelen Freedom model FN60VLED 60" LED with clear lenses and MKEZ7 mounts. Includes (6) red, (2) white, (4) blue modules and GTT Opticom. Location: Centered on the front cab roof.	$6,275
5300-0277	Light bar Whelen Freedom model FN72VLED 72" LED with MK8 mounts. N/A INTL Chassis or Vista roofs with front facing windows. Location: Centered on the front cab roof.	$4,158
5300-0286	Light bar Whelen Freedom model FN72QLED 72" LED with MK8 high mounts. Includes (14) red LED with red lenses. N/A INTL Chassis. Location: Centered on the front cab roof.	$5,770
5300-0292	Light bar Whelen Freedom model FN72QLED 72" LED with MK8 high mounts. Includes (8) red LED, (2) split red/white and (4) white LED. N/A INTL Chassis. Location: Centered on the front cab roof.	$6,043
5300-0294	Light bar Whelen Freedom model FN72QLED 72" LED with MK8H mounts. Centered on the front cab roof.	$4,050
5300-0297	Light bar Whelen Freedom model FN66QLED 66" with MKEZ7 mounts. All LED light bar without rear facing LEDs. Driver side red LED, officer blue LED. Location: Centered on the front cab roof.	$4,003
5300-0298	Light bar Whelen Freedom model FN72QLED 72" LED with MKEZ7 mounts. Location: Centered on the front cab roof.	$4,105
5300-0302	Light bar Federal Signal Split Vision VSLR8-NFPA1. Two (2) 26.5" 4-pod light bars w/ (3) red and (1) multi-color pods on each bar with red/clear lenses. Location: [#LOC].	$4,247
5300-0303	Light bar Whelen Freedom model FN66QLED 66" with MKEZ7 mounts. Includes (10) red LED with red lenses and (2) white LED with clear lenses. Location: Centered on the front cab roof.	$4,777
5300-0304	Light bar Whelen Freedom model FN72QLED 72" LED with MK8 high mounts. Includes (5) red LED, (5) blue and (4) white LED . N/A INTL Chassis. Location: Centered on the front cab roof.	$5,770

5300-0305	Light bar Whelen Freedom model FN55QLED 55" LED with driver red/officer blue LEDS, takedown lights and MKEZ7 mounts. Location: Centered on the front cab roof.	$3,930
5300-0306	Light bar Federal Signal JetSolaris 60" LED. Red and blue Solaris reflectors with center traffic clearing light. NFPA Compliant, does not require 2 addl side facing bars. Location: Centered on the front body, mounted to the roof with no upper body or mounted on a bracket in front of the body with 13" upper body.	$2,881
5300-0310	Light bar Whelen Freedom model FN72VLED 72" LED with Opticom and MK8H high mounts. Includes (10) red LED, (2) white LED and (2) blue LED. N/A INTL Chassis. Location: Centered on the front cab roof.	$7,027
5300-0318	Light bar risers (PR) for the light bars installed on the top of the cab to insure 360 degree visibility. The riser shall raise the as mounted light bar(s) approximately 4" to prevent interference with the brow lighting (if so equipped) and ensure 360 degree visibility is maintained.	$202
5300-0325	Light bar Whelen Freedom model FN72VLED 72" LED with 795H Opticom, (12) red LEDs, (2) clear LEDs and MK8H mounts. N/A INTL Chassis or Vista roofs with front facing windows. Location: Centered on the front cab roof.	$8,453
5300-0328	Light bar Whelen Freedom model FN72QLED 72" LED with MK8 high mounts. Includes (8) red LED, (2) blue LED and (4) white LED. N/A INTL Chassis. Location: Centered on the front cab roof.	$5,770
5300-0329	Light bar Whelen Freedom model FN55QLED 55" LED with driver red/officer blue LEDS, takedown lights and MKEZ7 mounts. Location: Centered on the front cab roof.	$3,930
5300-0330	Light bar Whelen Freedom model FN72QLED 72" LED with clear lenses and MKE7 mounts. Includes (10) red LED and (4) white LED. N/A INTL Chassis. Location: Centered on the front cab roof.	$5,770
5300-0331	Light bar Federal Signal JetSolaris 60" LED. Clear/white Solaris reflectors with red domes. NFPA compliant. Does not require 2 addl side facing bars. Location: Centered on the front cab roof.	$2,796
5300-0341	Whelen Justice model JE2NFPA 56" with MKEZ7 mounts. All LED (forward facing) light bar.	$674
5300-0343	Light bar Whelen Freedom model FN72QLED 72" LED with clear lenses, MKEZ7 mounts and pre-wire for 3M opticom. Includes (3) red LED, (3) blue LED and (2) white LED. N/A INTL Chassis. Location: Centered on the front cab roof	$3,923
5300-0344	Light bar Whelen Justice model JE0NFPA 62" LED with clear lenses and MKEZ7 mounts. N/A on Vista roofs with front facing windows. Includes (4) red corner facing LIN6 LED lights, (6) forward facing CON3 Linear LED lights; (4) red, (2) white. Location: Centered on the front cab roof.	$2,574
5300-0346	Whelen Mini-Freedom LED light bars (PR) model FNMINI 24" with clear lenses and MKEZ7 mounts. Includes red/clear/blue driver and blue/clear/red officer. Location: [#LOC].	$4,643
5300-0348	Light bar Whelen Freedom model FN55VLED 55" LED with GTT model 795H Opticom with FX795 pre-wire Opticom mounting kit and MK8H mounts. N/A with Vista roofs with front facing windows. Location: Centered on the front cab roof	$5,707
5300-0351	Light bar Whelen Freedom model FN66QLED 66" LED with MK8 high mounts. Includes (13) red LED, (7) blue and (2) white takedown LEDs. Location: centered on the front cab roof.	$7,017
5300-0352	Whelen Mini-Freedom LED light bars (PR) red/blue 24" with clear lenses and MKEZ7 mounts. Location: [#LOC].	$4,643
5300-0354	Light bar Federal Signal Split Vision VSLR6. Two (2) 21" 3-pod light bars w/ (3) red pods on each bar with red lenses. Location: [#LOC].	$3,592
5300-0355	Light bar Federal Signal Split Vision VSLR6. Two (2) 21" 3-pod light bars w/ (2) red pods and (1) multi-color pod on each bar with red/clear lenses. Location: [#LOC].	$3,592
5300-0356	Light bar Federal Signal Split Vision VSLR8-NFPA1. Two (2) 26.5" 4-pod light bars w/(3) red and (1) multi-color pods on each bar with red/clear lenses configured for use w/vista roof that has front windows. Location: [#LOC].	$4,247
5300-0357	Light bar Federal Signal Vision VSLR60S-NFPA1. Includes (7) LED pods; (5) red, (2) multi-color. Location: center cab roof.	$4,015
5300-0358	Light bars Federal Signal Vision VSLR. One (1) center 21" 3 pod and two (2) side 26.5" 4 pod LED light bars. Lenses to be R/R/C/R R/C/R R/C/R/R. Location: "V" centered on the front cab roof. If equipped with front vista windows, rear LED to be shut off.	$5,555
5300-0359	Light bar Federal Signal Split Vision VSLR6. Two (2) 21" 3-pod light bars w/ (3) blue pods on each bar with blue lenses. Location: [#LOC].	$3,592
5300-0360	Light bar Federal Signal Split Vision VSLR6. Two (2) 21" 3-pod light bars w/ (2) red pods and (1) multi-color pod on each bar with R/C/R lenses. Pods 2 and 5 to have rear rotators programmed amber to rear, white side and forward. Location: [#LOC].	$3,930
5300-0361	Light bar Federal Signal Split Vision VSLR6. Two (2) 21" 3-pod light bars w/ (2) blue pods and (1) multi-color pod on each bar with B/C/B lenses. Pods 2 and 5 to have rear rotators programmed amber to rear, white side and forward. Location: [#LOC].	$3,930
5300-0362	Light bars Power Arc model VM2502GLP-1P LED (PR). Colors to be RBR RBR. Includes Golight on each bar. Location: [#LOC].	$5,276
5300-0365	Light bars Federal Signal Vision VSLR. One (1) center 21" 3 pod and two (2) side 26.5" 4 pod LED light bars. Lenses to be R/C/R/R C/R/C R/R/C/R. Location: "V" centered on the front cab roof. If equipped with front vista windows, rear LED to be shut off.	$5,555
5300-0366	Light bars Federal Signal Vision VSLR. One (1) center 21" 3 pod and two (2) side 26.5" 4 pod LED light bars. Lenses to be R/R/C/R R/R/R R/C/R/R. Location: "V" centered on the front cab roof. If equipped with front vista windows, rear LED to be shut off.	$5,555
5300-0367	Light bar Whelen Freedom model FN66QLED 66" with MKEZ7 mounts. (10) red and (2) white LED light bar without rear facing LEDs. Location: Centered on the front body, mounted to the roof with no upper body or mounted on a bracket in front of the body with 13" upper body.	$4,856
5300-0368	Light bar Federal Signal JetSolaris 60" LED. Red and blue Solaris reflectors reflectors with center traffic clearing light. NFPA compliant, does not require 2 addl side facing bars. Location: Centered on the front cab roof.	$2,881
5300-0370	Light bar Federal Signal Split Vision VSLR8S-CFD2. Two (2) 26.5" 4-pod light bars w/driver side (3) red and (1) multi-color pods, officer side (2) red, (1) green and (1) multi-color pods with red/green/clear lenses. Location: [#LOC].	$4,376

5300-0371	Light bar Federal Signal Split Vision VSLR8S-CHI. Two (2) 26.5" 4-pod light bars w/driver side (3) red and (1) multi-color pods, officer side (2) red, (1) green and (1) multi-color pods with red and clear lenses. Location: [#LOC].	$4,376
5300-0374	Light bar Code 3 LED model 2722NFPA1 (PR) 22" Long. All red with clear lens. Location:[#LOC].	$3,839
5300-0376	Light bar Federal Signal Split Vision VSLR6-NFPA1. Two (2) 21" 3-pod light bars w/ (2) red and (1) multi-color pods on each bar with clear lenses. Location: [#LOC].	$3,990
5300-0380	Light bar Federal Signal JetSolaris 60" LED. Blue Solaris reflectors with clear domes. NFPA compliant. Does not require 2 addl side facing bars. Location: Centered on the front cab roof.	$2,796
5300-0382	Light bar Federal Signal Split Vision VSLR8S-CFD2. Two (2) 26.5" 4-pod light bars w/ (3) red with red domes and (1) multi-color pod with clear dome on driver and (2) red with red domes, (1) multi-color with clear dome and (1) green with clear dome. Location: [#LOC].	$4,646
5300-0383	Light bar Federal Signal JetStream JLX54HH-00011 with all lenses clear 54" LED. Red Solaris reflectors each side and (2) center TCL lights. Location: Centered on the front cab roof.	$2,941
5300-0385	Light bar Whelen Freedom model FN72QLED 72" LED with MKEZ7 mounts. Includes (8) red LED, (2) white LED and (2) dual LR11 LED take down lights. N/A INTL Chassis. Location: Centered on the front vista cab roof.	$5,052
5300-0389	Light bar Whelen Freedom model FN66QLED 66" with MK8H high mounts. All LED light bar without rear facing LEDs. Location: Centered on the front cab roof.	$4,052
5300-0391	Light bar Federal Signal Split Vision VSLR8. Two (2) 26.5" 4-pod light bars. Driver w/ (2) red and (2) multi-color pods with clear lenses; officer w/ (3) red and (1) multi-color pods with clear lenses. Location: [#LOC].	$5,306
5300-0393	Light bar Whelen Freedom model FN72VLED 72" LED with MKEZ7 mounts. Includes (10) red LED and (2) white LED. N/A INTL Chassis. Location: Centered on the front cab roof.	$4,761
5300-0395	Whelen Mini-Freedom Rota-Beam LED light bars (PR) 24" with clear lenses and MKEZ7 mounts. Location: [#LOC].	$6,023
5300-0396	Light bar Whelen Freedom 72" LED with MK8 high mounts and clear lenses. Includes (5) red Rota-Beam LED, (4) red LED and (4) white LED. N/A INTL Chassis. Location: Centered on the front cab roof.	$6,336
5300-0397	Light bar Whelen Freedom model FN72QLED 72" LED with MKEZ7 mounts. Includes (10) red LED and (2) white LED. N/A INTL Chassis. Location: Centered on the front cab roof.	$4,960
5300-0399	Light bar Whelen Freedom model FN72QLED 72" LED with GTT Opticom, clear lenses and MKEZ7 mounts. Includes (6) red LED, (2) blue LED and (2) white LED. N/A INTL Chassis. Location: Centered on the front cab roof.	$6,783
5300-0401	Light bar Whelen Freedom 72" LED with MKEZ7 mounts and clear lenses. Includes (6) Rota-Beam LED (4-red, 2-white), (2) green LED, (2) red LED, (2) dual LR11 alley lights, (2) LR11 take down lights and GTT 795H Opticom. N/A INTL Chassis. Location: Centered on the front cab roof.	$7,295
5300-0403	Whelen Mini-Freedom Rota-Beam LED light bars (PR) 28.25" with R/C/R lenses, (2) red and (1) white Rota-Beam LED lights and MK8H high mounts. Location: [#LOC].	$5,797
5300-0404	Light bar Whelen Freedom 72" LED with MK8 high mounts and red / clear lenses. Includes (6) red Rota-Beam LED, (1) white Rota-Beam LED and (4) red LED. N/A INTL Chassis. Location: Centered on the front cab roof.	$5,900
5300-0405	Whelen Mini-Freedom LED light bar package with MKEZ7 mounts. (1) model FT8RCCRF centered on front cab roof, (1) FT8RRRRF each side front cab corner at 30 degree angle. Lense colors: Clear.	$5,729
5300-0406	Light bar Whelen Freedom 72" LED with MK8H high mounts and clear lenses. Includes (6) red Rota-Beam LED, (1) white Rota-Beam LED, (2) red LED and (2) white LED. N/A INTL Chassis. Location: Centered on the front cab roof.	$6,148
5300-0407	Light bar Whelen Freedom 60" LED with MK8 high mounts and clear lenses. Includes (6) red Rota-Beam LED, (1) white Rota-Beam LED and (2) white LED. N/A INTL Chassis. Location: Centered on the front cab roof.	$5,647
5300-0409	Light bar Whelen Freedom model FN55QLED 55" LED with MKEZ7 mounts. Location: Centered on the front cab roof.	$3,404
5300-0410	Light bar Federal Signal JetSolaris 60" LED. Red Solaris reflectors with red domes. NFPA compliant. Does not require 2 addl side facing bars. Location: Centered on the front cab roof.	$2,796
5300-0411	Light bar Whelen Freedom model FN82QLED 82" LED with clear lenses, Opticom and MKEZ7 mounts. Includes (12) red LED and (2) white LED. N/A INTL Chassis. Location: Centered on the front cab roof.	$6,726
5300-0412	Light bar Federal Signal Legend 70" LED with red/white diodes and clear lenses. Location: Centered on the front cab roof.	$4,261
5300-0413	Light bar Federal Signal Navigator model NVG73-EONE 73" with (6) red and (2) white Quadraflare LED lights. Location: Centered on the front cab roof.	$3,465
5300-0415	Light bar Federal Signal Navigator model NVG73-NFPA3 73" with (2) red SLR rotators, (2) red / white SLR rotators and (4) red Quadraflare LED lights. Location: Centered on the front cab roof.	$3,864
5300-0416	Whelen Mini-Freedom Rota-Beam LED light bars (PR) 24" with clear lenses and MK8H high mounts. Location: [#LOC].	$6,079
5300-0417	Light bar Whelen Freedom 72" LED with MKEZ7 mounts and clear lenses. Includes (5) red Rota-Beam LED and (2) white Rota-Beam LED. N/A INTL Chassis. Location: Centered on the front cab roof.	$5,094
5300-0418	Whelen Ultra Freedom Micro Edge LED (PR) model MCFLED25 clear lens with red LEDs. Location [#LOC]. When used at front cab corners requires additional lighting to meet NFPA.	$2,042
5300-0421	Light bar Whelen Freedom 72" LED with MKEZ7 mounts and clear lenses. Includes (8) red Rota-Beam LED and GTT 795H Opticom. N/A INTL Chassis. Location: Centered on the front cab roof.	$6,872
5300-0422	Light bar Whelen Freedom model FN72VLED 72" LED with 795H Opticom and MKEZ7 mounts. Includes (6) red LED, (4) blue LED and (2) white LED. N/A INTL Chassis. Location: Centered on the front cab roof.	$7,788
5300-0423	Light bar Whelen Freedom model FN66VLED 66" with dual LR11 alley lights, dual LR11 takedown lights and MKEZ7 mounts. All LED light bar. Location: Centered on the front cab roof	$4,382

5300-0424	Light bar Whelen Freedom 72" LED with MKEZ7 mounts and red/clear lenses. Includes (8) red Rota-Beam LED and GTT 795H Opticom. N/A INTL Chassis. Location: Centered on the front cab roof.	$6,872
5300-0427	Light bar Whelen Freedom model FN55VLED 55" LED with PE215 emitter, (4) red driver LED, (4) blue officer LED and MKEZ7 mounts and clear lenses. N/A with Vista roofs with front facing windows. Location: Centered on the front cab roof.	$4,355
5300-0428	Light bar Whelen Freedom model FN66QLED 66" with MKEZ7 mounts. Red/blue/clear LED light bar without rear facing LEDs. Location: Centered on the front cab roof.	$4,003
5300-0430	Light bar Power Arc model LED VM6004-3P 60" long. Lenses color: R/R/R/W/R/R/R Location: center front cab roof.	$3,633
5300-0435	Light bar Federal Signal LPX61DS-NFPA 61" LED with red and clear lenses. Location: Centered on the front cab roof	$2,101
5300-0436	Light bar Federal Signal LPX70DS-NFPA1 70" LED with red and clear lenses. Location: Centered on the front cab roof	$2,257
5300-0437	Light bar Federal Signal Navigator model NVG60-NFPA4 60" with (10) red Quadraflare LED lights. Location: Centered on the front cab roof.	$3,463
5300-0438	Light bar Federal Signal Navigator model NVG73-NFPA4 73" with (12) red Quadraflare LED lights. Location: Centered on the front cab roof.	$4,002
5300-0440	Light bar Federal Signal Navigator model NVG60-NFPA1 60" with (2) red SLR rotators, (1) red / white SLR rotators and (2) red Quadraflare LED lights. Location: Centered on the front cab roof.	$2,825
5300-0441	Light bar Whelen Freedom model FN88VLED 88" LED with MKEZ7 mounts and clear lenses. Includes (10) red, (6) white LEDs and (2) dual LR11 alley lights. N/A commercial Chassis. Location: Centered on the front cab roof	$6,596
5300-0442	Light bar Whelen Freedom model FN72VLED 72" LED with 795H Opticom and MKEZ7 mounts. Includes (8) red LED and (4) blue LED. N/A INTL Chassis. Location: Centered on the front cab roof.	$7,788
5300-0444	Light bar Federal Signal Navigator model NVG73-FLNDRS 73" with (2) red SLR rotators, (2) red/white SLR rotators, (2) red/white Quadraflare LED and (2) blue Quadraflare LED lights. Location: Centered on the front cab roof.	$4,398
5300-0445	Federal JLX7250-NFPA LED Light bar 72". Includes (8) red 6-LED reflectors, (3) white 6-LED reflectors, and (6) red 3-LED reflectors. The lenses shall be clear. No rear lighting.	$4,574
5300-0447	Light bar Federal Signal LPX 53" LED with red/clear/blue lenses, red diodes outer driver, clear diodes center and blue diodes outer officer. Location: Centered on the front cab roof	$1,965
5300-0448	Light bar Whelen Freedom model FN72VLED 72" LED with MK8H high mounts. Includes (11) red LED, (2) white LED and (1) green LED. N/A INTL Chassis. Location: Centered on the front cab roof.	$5,162
5300-0450	Light bar Whelen Freedom model FN72VLED 72" LED with Opticom and MKEZ7 mounts. Includes (6) red LED, (6) blue LED and (2) white LED. N/A INTL Chassis. Location: Centered on the front cab roof.	$7,027
5310-0000	Light bar Federal Signal, Signal Master SML6. Location: installed at the rear of the apparatus.	$926
5310-0001	Light bar Federal Signal Signal Master SML8.	$1,018
5310-0002	Light bar Federal Signal Signal Master SMLED6.	$1,579
5310-0003	Light bar Federal Signal Signal Master SMLED8.	$1,668
5310-0005	Whelen Traffic Advisor Model TA837A - 43.25" long.	$1,152
5310-0006	Whelen Traffic Advisor Model TA870A - 62" long.	$1,805
5310-0010	Light bar Federal Signal Signal Master SML430, 19.5" long (PR). Mounted each side rear of body.	$1,070
5310-0011	Light bar CODE 3 model AS10S Arrowstik, 47" long. Mounted center rear body.	$1,332
5310-0012	Diamond plate shield over rear directional light.	$331
5310-0014	Light bar CODE 3 model AS839 Arrowstik, 39" long. Lenses to be amber with red on the ends. Mounted center rear body.	$1,088
5310-0015	Light bar CODE 3 model NASL839 LEDX Narrowstik, 40.5" long. Lights heads are amber with red on the ends. Mounted center rear body.	$1,938
5310-0017	Whelen Traffic Advisor model TAL65 LED - 36" long.	$1,428
5310-0018	Whelen Traffic Advisor Model TAM65 LED - 36" long.	$1,846
5310-0021	Light bar CODE 3 model NASL839 LEDX Narrowstik, 40.5 inches long. Mounted center rear body.	$1,938
5310-0023	Light bar CODE 3 model NASL630 LEDX Narrowstik, 30.5 inches long.	$1,738
5310-0025	Directional light circuit wiring through upper level warning.	$81
5310-0027	Whelen Traffic Advisor Model TAM85 LED - 47" long.	$2,583
5310-0028	Whelen Traffic Advisor Model TAM83 LED - 31" long.	$1,892
5310-0029	Smooth plate shield painted job color over rear directional light.	$572
5310-0030	Whelen Traffic Advisor Model TA870L LED- 62" long.	$3,703
5310-0031	Whelen Traffic Advisor model TA-4437M LED, split (2) 22.75" long. Locate one each side on rear panel of body.	$2,163
5310-0035	Whelen Traffic Advisor Model TAL85 LED - 47" long.	$1,798
5310-0042	Whelen Traffic Advisor Model TAZ86 LED - 31" long.	$2,376
5310-0043	Whelen Traffic Advisor Model TANF65 LED - 34" long.	$1,817
5310-0044	Light bar Federal Signal Signal Master Viper EXT LED 42" with 8 lights.	$1,890
5310-0045	Light bar Federal Signal Signal Master Viper EXT LED 31" with 6 lights.	$1,669
5310-0046	Whelen Traffic Advisor Model TANF85 LED - 45" long.	$2,244
5310-0053	Whelen Traffic Advisor model TA-4437M LED, split (2) 22.75" long. Locate one each side on rear upper body extrusion above B2 and B3.	$2,163
5310-0054	Light bar Federal Signal Signal Master Plus SMLED-PLS-6.	$1,408
5310-0055	Light bar Federal Signal Master Viper EXT LED 31" with 6 lights with clear lenses.	$1,669
5310-0056	Whelen Traffic Advisor model TAL65 LED - 36" long. Locate surface mounted on driver and officer side of body up high approx. centered.	$1,428
5310-0058	Whelen Traffic Advisor Model TADP8 LED - 30" long. Includes TADCTL1 controller.	$2,256
5310-0059	Whelen Traffic Advisor Model TAD8 LED - 30" long. Includes TACTLD1 controller.	$1,909

5350-0000	Camera backup Intec with monochrome monitor.	$4,771
5350-0001	Camera back-up Safety Vision LCD model SV-CLCD70BA-625B with audio. For use with up to 2 cameras.	$2,153
5350-0048	Setcom intercom system with (6) cab jacks and (1) pump panel jack. Custom cabs only. Headsets to be shipped loose.	$9,437
5350-0054	Safety Vision officer's side camera. Requires Safety Vision back-up camera option. SV-620 Kit w/ SV-523. Camera to be located on officer's side mirror.	$942
5350-0060	Diamond plate camera shield.	$221
5350-0061	Safety Vision driver's side camera. Requires Safety Vision back-up camera option. SV-620 Kit w/ SV-523. Camera to be located on driver's side mirror.	$942
5350-0074	Sigtronics US-45S intercom system with (4) cab jacks, (1) pump panel jack, four headsets / hooks, PTT switches for driver / ppnl. Does not include radio interface cable. Custom cabs only. Headsets to be shipped loose.	$4,496
5350-0076	David Clark model 3800 intercom system with (5) cab head sets. Headsets to be shipped loose.	$7,380
5350-0078	Smooth plate camera shield painted job color (match the "two tone" sale code color, if two tone applies).	$341
5350-0079	Sigtronics US-45D intercom system with (3) cab jacks, (1) pump panel jack, three headsets / hooks, PTT switches for driver/officer/ppnl. Does not include radio interface cable. Custom cabs only. Headsets to be shipped loose.	$4,244
5350-0080	Camera back-up Safety Vision LCD model SV-CLCD70A-625B with split screen capable monitor and audio. For use with up to 4 cameras.	$2,524
5350-0081	Backup Camera to be located in recess direction lightbar box offset to officer side.	$221
5350-0084	David Clark model 3800 intercom system with (6) cab head sets. Headsets to be shipped loose.	$8,346
5350-0085	Safety Vision officer's side camera SV-622RS w/ SV-512 cable. Requires Safety Vision back-up camera option. Camera to be located up high on officer side of the cab centrally located (above canopy window if applicable) interlocked with right turn signal. Camera only - does not include monitor.	$975
5350-0086	Safety Vision driver's side camera SV-622LS w/ SV-512 cable. Requires Safety Vision back-up camera option. Camera to be located up high on driver side of the cab centrally located (above canopy window if applicable) interlocked with left turn signal. Camera only - does not include monitor.	$975
5350-0110	Camera backup Zone Defense LCD model SYS-323-1-4Q with split screen capable monitor.	$2,078
5350-0111	Camera backup Zone Defense LCD model SYS-323-1-4.	$1,400
5350-0112	Sigtronics US-67S intercom system with (6) cab jacks, six headsets / hooks, PTT switches for driver / officer. Does not include radio interface cable. Custom cabs only. Headsets to be shipped loose.	$5,866
5350-0114	Sigtronics US-67D intercom system with (6) cab jacks, six headsets / hooks, PTT switches for driver / officer. Does not include radio interface cable. Custom cabs only. Headsets to be shipped loose.	$5,980
5350-0116	Federal Signal back-up/DVR camera system. Includes front view, rear view camera, side view cameras, split screen monitor and DVR.	$4,136
5350-0118	Camera backup Federal Signal LCD model CAMSET70-NTSC-4.	$1,260
5350-0119	A Voyager three camera back-up system shall be provided. It shall include a 5.6 inch LCD monitor model # AOM562HD in the cab. Display shall be located on drivers side of the center dash pedestal mounted. Locate (1) camera model # VCCS150B on the rear of the body on B1 header. The rear camera shall be positioned to provide the best possible view of the rear and rear side of the body during back-up operations. (1) Side facing camera mounted up high on driver side of the cab on front cab corner model # VCMS36LCM and (1) Side facing camera mounted up high on officer side of the cab located on front cab corner model # VCMS36RCM.	$1,877
5350-0123	Sigtronics US-12S intercom system with (7) cab jacks, (1) pump panel jack, seven headsets / hooks, PTT switches for driver / officer / ppnl. Does not include radio interface cable. Custom cabs only. Headsets to be shipped loose.	$6,729
5350-0130	David Clark model 3800 intercom system with (6) cab head sets and (1) pump panel jack. Custom cabs only. Headsets to be shipped loose.	$10,464
5350-0132	David Clark model 3800 intercom system with four (4) cab head sets and one (1) pump panel jack. Radio interfaced to three (3) positions, driver , turret operator and pump panel. Headsets to be shipped loose.	$10,836
5350-0136	Sigtronics US-67D intercom system with (5) cab jacks, (1) pump panel jack, (1) driver rear body jack, five headsets / hooks, PTT switches for driver / officer / ppnl / rear body. Does not include radio interface cable. Custom cabs only. Headsets to be shipped loose.	$5,568
5350-0137	Sigtronics US-45S intercom system with (4) cab jacks, four headsets / hooks, PTT switches for driver / officer. Does not include radio interface cable. Custom cabs only. Headsets to be shipped loose.	$4,376
5350-0140	Safety Vision officer's side camera SV-622RS w/ SV-512 cable. Requires Safety Vision back-up camera option. Camera to be located on officer's side gravel shield offset to the rear.	$942
5350-0142	Safety Vision officer's side camera. Requires Safety Vision back-up camera option. SV-620 Kit w/ SV-523. Camera to be located on officer's side of cab above tank level lights.	$942
5350-0158	Camera back-up Safety Vision LCD model SV-CLCD70B-625B with audio. Located in cab dash on bracket (see photos).	$2,153
5350-0169	Camera back-up Safety Vision LCD model SV-CLCD-64-810 with lens shutter that opens when the unit is put in reverse.	$2,227
5350-0175	David Clark model 3800 intercom system with (4) cab head sets. Headsets to be shipped loose.	$6,414
5350-0176	David Clark model 3800 intercom system with (5) cab head sets and (1) pump panel jack. Custom cabs only. Headsets to be shipped loose.	$9,548
5350-0177	FireCom (4) position wireless 5yr extended warranty. Includes 5-day repair time with 2-day shipping.	$1,861

5350-0180	Safety Vision officer's side camera SV-622RS w/ SV-512 cable. Requires Safety Vision back-up camera option. Camera to be located up high on officer side of the cab centrally located (above canopy window if applicable) interlocked with left turn signal. Camera only - does not include monitor.	$975
5350-0181	Camera back-up Safety Vision LCD model SV-CLCD70BA-620A with audio. For use with up to 2 cameras.	$2,311
5350-0186	Back-up camera speaker. For use with V-MUX electrical system. Located in cab accessible to driver.	$223
5350-0192	Safety Vision back-up camera wired through multiplex display. Video displays automatically when transmission is in reverse. Camera only - does not include monitor.	$942
5350-0196	Sigtronics US-67D intercom system with (5) cab jacks, (1) pump panel jack, five headsets / hooks, PTT switches for driver / officer / ppnl. Does not include radio interface cable. Custom cabs only. Headsets to be shipped loose.	$5,242
5350-0199	FireCom intercom kit to include a digital intercom model 5100D, four (4) plug in modules and headset hooks shall be installed within the cab. Headsets are not included and ordered separately (misc loose equip).	$2,760
5350-0200	FireCom intercom kit to include a digital intercom model 5100D, four (4) plug in modules and headset hooks shall be installed within the cab and one (1) exterior pump panel plug in module. Headsets are not included and ordered separately (misc loose equip).	$2,998
5350-0201	FireCom intercom kit to include a digital intercom model 5100D, six (6) plug in modules and headset hooks shall be installed within the cab. Headsets are not included and ordered separately (misc loose equip).	$3,127
5350-0202	FireCom intercom kit to include a digital intercom model 5100D, six (6) plug in modules and headset hooks shall be installed within the cab and one (1) exterior pump panel plug in module. Headsets are not included and ordered separately (misc loose equip).	$3,405
5350-0203	FireCom intercom kit to include a digital intercom model 5100D, five (5) plug in modules and headset hooks shall be installed within the cab. Headsets are not included and ordered separately (misc loose equip).	$2,964
5350-0204	FireCom intercom kit to include a digital intercom model 5100D, five (5) plug in modules and headset hooks shall be installed within the cab and one (1) exterior pump panel plug in module. Headsets are not included and ordered separately (misc loose equip).	$3,201
5350-0205	FireCom wireless intercom kit to include a digital intercom model 5100D, two (2) base transmit units with radio transmission, one (1) base transmit unit for intercom only (no radios) and four (4) headset hooks shall be installed within the cab. Headsets are not included and ordered separately (misc loose equip).	$4,263
5350-0206	FireCom wireless intercom kit to include a digital intercom model 5100D, two (2) base transmit units with radio transmission, one (1) base transmit unit for intercom only (no radios) and five (5) headset hooks shall be installed within the cab. Headsets are not included and ordered separately (misc loose equip).	$4,299
5350-0207	FireCom wireless intercom kit to include a digital intercom model 5100D, two (2) base transmit units with radio transmission, one (1) base transmit unit for intercom only (no radios) and six (6) headset hooks shall be installed within the cab. Headsets are not included and ordered separately (misc loose equip).	$4,333
5350-0208	FireCom intercom kit to include a dual radio digital intercom model 5200D, four (4) plug in modules and headset hooks shall be installed within the cab. Headsets are not included and ordered separately (misc loose equip).	$3,236
5350-0209	FireCom intercom kit to include a dual radio digital intercom model 5200D, four (4) plug in modules and headset hooks shall be installed within the cab and one (1) exterior pump panel plug in module. Headsets are not included and ordered separately (misc loose equip).	$3,474
5350-0210	FireCom intercom kit to include a dual radio digital intercom model 5200D, six (6) plug in modules and headset hooks shall be installed within the cab. Headsets are not included and ordered separately (misc loose equip).	$3,603
5350-0211	FireCom intercom kit to include a dual radio digital intercom model 5200D, six (6) plug in modules and headset hooks shall be installed within the cab and one (1) exterior pump panel plug in module. Headsets are not included and ordered separately (misc loose equip).	$3,883
5350-0212	FireCom intercom kit to include a dual radio digital intercom model 5200D, five (5) plug in modules and headset hooks shall be installed within the cab. Headsets are not included and ordered separately (misc loose equip).	$3,441
5350-0213	FireCom intercom kit to include a dual radio digital intercom model 5200D, five (5) plug in modules and headset hooks shall be installed within the cab and one (1) exterior pump panel plug in module. Headsets are not included and ordered separately (misc loose equip).	$3,679
5350-0214	FireCom wireless intercom kit to include a dual radio digital intercom model 5200D, two (2) base transmit units with radio transmission, one (1) base transmit unit for intercom only (no radios) and four (4) headset hooks shall be installed within the cab. Headsets are not included and ordered separately (misc loose equip).	$4,708
5350-0215	FireCom wireless intercom kit to include a dual radio digital intercom model 5200D, two (2) base transmit units with radio transmission, one (1) base transmit unit for intercom only (no radios) and five (5) headset hooks shall be installed within the cab. Headsets are not included and ordered separately (misc loose equip).	$4,741
5350-0216	FireCom wireless intercom kit to include a dual radio digital intercom model 5200D, two (2) base transmit units with radio transmission, one (1) base transmit unit for intercom only (no radios) and six (6) headset hooks shall be installed within the cab. Headsets are not included and ordered separately (misc loose equip).	$4,775
5350-0219	Safety Vision officer's side camera SV-622RS w/ SV-512 cable. Requires Safety Vision back-up camera option. Camera to be located on the officer side cab, up high behind front door, below the scene light interlocked with right turn signal. Camera only - does not include monitor.	$975
5350-0221	Setcom intercom kit to include a intercom model IM-900 and four (4) plug in modules shall be installed within the cab. Headsets are not included and ordered separately (misc loose equip).	$1,348

5350-0222	Setcom dual radio intercom kit to include a intercom model IM-900 and four (4) plug in modules shall be installed within the cab. Headsets are not included and ordered separately (misc loose equip).	$1,828
5350-0223	Setcom intercom kit to include a intercom model IM-900, four (4) plug in modules shall be installed within the cab and (1) pump panel plug in module. Headsets are not included and ordered separately (misc loose equip).	$1,714
5350-0224	Setcom dual radio intercom kit to include a intercom model IM-900, four (4) plug in modules shall be installed within the cab and (1) pump panel plug in module. Headsets are not included and ordered separately (misc loose equip).	$2,194
5350-0225	Setcom intercom kit to include a intercom model IM-900 and five (5) plug in modules shall be installed within the cab. Headsets are not included and ordered separately (misc loose equip).	$1,669
5350-0226	Setcom dual radio intercom kit to include a intercom model IM-900 and five (5) plug in modules shall be installed within the cab. Headsets are not included and ordered separately (misc loose equip).	$2,148
5350-0227	Setcom intercom kit to include a intercom model IM-900, five (5) plug in modules shall be installed within the cab and (1) pump panel plug in module. Headsets are not included and ordered separately (misc loose equip).	$2,035
5350-0228	Setcom dual radio intercom kit to include a intercom model IM-900, five (5) plug in modules shall be installed within the cab and (1) pump panel plug in module. Headsets are not included and ordered separately (misc loose equip).	$2,513
5350-0229	Setcom intercom kit to include a intercom model IM-900 and six (6) plug in modules shall be installed within the cab. Headsets are not included and ordered separately (misc loose equip).	$1,669
5350-0230	Setcom dual radio intercom kit to include a intercom model IM-900 and six (6) plug in modules shall be installed within the cab. Headsets are not included and ordered separately (misc loose equip).	$2,148
5350-0231	Setcom intercom kit to include a intercom model IM-900, six (6) plug in modules shall be installed within the cab and (1) pump panel plug in module. Headsets are not included and ordered separately (misc loose equip).	$2,035
5350-0232	Setcom dual radio intercom kit to include a intercom model IM-900, six (6) plug in modules shall be installed within the cab and (1) pump panel plug in module. Headsets are not included and ordered separately (misc loose equip).	$2,513
5350-0233	Setcom wireless intercom kit to include a intercom model IM-900 and four (4) wireless adapters shall be installed within the cab. Headsets are not included and ordered separately (misc loose equip).	$1,959
5350-0234	Setcom wireless dual radio intercom kit to include a intercom model IM-900 and four (4) wireless adapters shall be installed within the cab. Headsets are not included and ordered separately (misc loose equip).	$2,437
5350-0235	Setcom wireless intercom kit to include a intercom model IM-900 and five (5) wireless adapters shall be installed within the cab. Headsets are not included and ordered separately (misc loose equip).	$2,406
5350-0236	Setcom wireless dual radio intercom kit to include a intercom model IM-900 and five (5) wireless adapters shall be installed within the cab. Headsets are not included and ordered separately (misc loose equip).	$2,886
5350-0237	Setcom wireless intercom kit to include a intercom model IM-900 and six (6) wireless adapters shall be installed within the cab. Headsets are not included and ordered separately (misc loose equip).	$2,536
5350-0238	Setcom wireless dual radio intercom kit to include a intercom model IM-900 and six (6) wireless adapters shall be installed within the cab. Headsets are not included and ordered separately (misc loose equip).	$3,016
5350-0239	David Clark model 3800 intercom system with (4) cab head sets and (1) pump panel jack. Custom cabs only. Headsets to be shipped loose.	$8,631
5350-0242	FireCom (8) position, (1) which is wireless. Intercom kit to include a digital quad radio monitor intercom model 5400D, one (1) base transmit unit with radio transmission (for wireless), seven (7) plug in modules and eight (8) headset hooks shall be installed within the cab. Headsets are not included and ordered separately (misc loose equip).	$5,895
5350-0243	FireCom intercom kit to include a digital intercom model 5100D, eight (8) plug in modules and headset hooks shall be installed within the cab. Headsets are not included and ordered separately (misc loose equip).	$3,575
5350-0245	FireCom (2) wireless (2) plug in intercom kit to include a digital intercom model 5100D, two (2) base transmit units with radio transmission for forward poisitions, (2) plug in modules for rear positions and four (4) headset hooks shall be installed within the cab. Headsets are not included and ordered separately (misc loose equip).	$3,887
5350-0249	Sigtronics US-45S Ultrasound Intercom System with (4) cab jacks, (4) headsets, (2) SE-8RPTT headsets dual speaker, flex boom mic with radio push to talk switch, (2) SE-8 headsets dual speaker, flex boom mic. Includes HLN6961 radio interface cable. Custom cabs only. Headsets to be shipped loose.	$5,584
5350-0255	Foot switch driver side Setcom. Trico foot switch to key the microphone includes 16' cable.	$367
5350-0257	Federal Signal (Sony) driver's side camera. Camera to be located up high on driver side of the cab centrally located (above canopy window if applicable) interlocked with left turn signal. Camera only - does not include monitor.	$708
5350-0258	Federal Signal (Sony) officer's side camera. Camera to be located up high on officer side of the cab centrally located (above canopy window if applicable) interlocked with left turn signal. Camera only - does not include monitor.	$708
5350-0261	David Clark model 3800 intercom system with (8) head sets and (1) pump panel jack. Custom cabs only. Headsets to be shipped loose.	$12,259
5350-0262	David Clark model 3800 intercom system with (8) cab head sets. Headsets to be shipped loose.	$10,280

5350-0263	Sigtronics US-12S intercom system with (8) cab jacks, (1) pump panel jack, eight headsets / hooks, PTT switches for driver / officer / ppnl. Does not include radio interface cable. Custom cabs only. Headsets to be shipped loose.	$7,472
5350-0264	Safety Vision camera. Requires Safety Vision back-up camera option or multiplex display. SV-625B Kit. Camera to be located driver side compartment top above dump chute, officer side below diamond plate mounting box for scene light above dump chute.	$1,883
5350-0265	FireCom intercom kit to include a digital intercom model 5100D, six (6) plug in modules and headset hooks shall be installed within the cab and one (1) exterior plug in module in L1 adjacent to breaker box (if equipped). Headsets are not included and ordered separately (misc loose equip).	$3,405
5350-0267	FireCom (4) position, (1) which is wireless. Intercom kit to include a digital intercom model 5100D, one (1) base transmit unit with radio transmission (for wireless), (3) plug in modules and (4) headset hooks shall be installed within the cab. Headsets are not included and ordered separately (misc loose equip).	$3,226
5350-0269	Camera system Voyager model AOM713WP 7" waterproof monitor with VCMS10B camera located on officer side pump module up high. Monitor located on pump operator panel.	$1,288
5350-0270	Federal Signal (Sony) driver's side camera. Camera to be located on front cab corner (approx 31" bottom of camera to bottom of cab) interlocked with left turn signal. Camera only - does not include monitor.	$708
5350-0271	Federal Signal (Sony) officer's side camera. Camera to be located on front cab corner (approx 31" bottom of camera to bottom of cab) interlocked with right turn signal. Camera only - does not include monitor.	$708
5350-0276	Back-up camera speaker. For use with V-MUX electrical system. Located on driver side overhead console.	$223
5350-0277	FireCom (5) position, (1) which is wireless. Intercom kit to include a digital intercom model 5100D, one (1) base transmit unit with radio transmission (for wireless), (4) plug in modules and (5) headset hooks shall be installed within the cab. Headsets are not included and ordered separately (misc loose equip).	$3,306
5350-0278	FireCom wireless intercom kit to include a digital intercom model 5100D, two (2) base transmit units with radio transmission, and two (2) headset hooks shall be installed within the cab. Headsets are not included and ordered separately (misc loose equip).	$3,157
5350-0279	FireCom intercom kit to include a digital intercom model 5100D, six (6) plug in modules and headset hooks shall be installed within the cab and one (1) exterior plug in module at the driver side rear of body. Headsets are not included and ordered separately (misc loose equip).	$3,405
5350-0280	FireCom (6) position, (1) which are wireless. Intercom kit to include a digital intercom model 5100D, two (1) base transmit unit with radio transmission (for wireless), (5) plug in modules and (6) headset hooks shall be installed within the cab. Headsets are not included and ordered separately (misc loose equip).	$3,386
5350-0285	FireCom (6) position, (2) which are wireless. Intercom kit to include a digital intercom model 5100D, two (2) base transmit unit with radio transmission (for wireless), (4) plug in modules and (4) headset hooks shall be installed within the cab. Headsets are not included and ordered separately (misc loose equip).	$3,936
5350-0286	FireCom (6) position, (2) which are wireless. Intercom kit to include a digital intercom model 5200D, two (2) base transmit unit with radio transmission (for wireless), (4) plug in modules and (6) headset hooks shall be installed within the cab. Headsets are not included and ordered separately (misc loose equip).	$4,722
5350-0287	Brushed stainless steel camera shield.	$255
5350-0289	FireCom (5) position, (2) which are wireless. Intercom kit to include a digital intercom model 5100D, two (2) base transmit unit with radio transmission (for wireless), (3) plug in modules and (5) headset hooks shall be installed within the cab. Headsets are not included and ordered separately (misc loose equip).	$3,922
5350-0291	Sigtronics US-67S intercom system with (6) cab jacks, (1) pump panel jack, six headsets / hooks, PTT switches for driver / officer / ppnl. Does not include radio interface cable. Custom cabs only. Headsets to be shipped loose.	$5,987
5350-0292	Sigtronics US-45D intercom system with (3) cab jacks, (1) pump panel jack, (1) turntable jack, three headsets / hooks, PTT switches for driver/officer/ppnl/turntable. Does not include radio interface cable. Custom cabs only. Headsets to be shipped loose.	$4,416
5350-0293	FireCom intercom kit to include a digital intercom model 5100D, five (5) plug in modules and headset hooks shall be installed within the cab and one (1) exterior plug in module at the driver side rear of body. Headsets are not included and ordered separately (misc loose equip).	$3,201
5350-0296	FireCom (2) wireless (2) plug in intercom kit to include a digital intercom model 5400D, two (2) base transmit units with radio transmission for forward positions, (2) plug in modules for rear positions and four (4) headset hooks shall be installed within the cab. Headsets are not included and ordered separately (misc loose equip).	$5,299
5380-0004	Compartment light incandescent additional (EA). Locate opposite of standard (if applicable) in compartment [#LOC]	$78
5380-0005	Compartment light Truck-Lite LED additional (EA). Locate opposite of standard in compartment [#LOC].	$203
5380-0006	Compartment light incandescent additional (EA). Door(s) mounted. Compartment [#LOC].	$122
5380-0007	Compartment light Truck-Lite LED additional (EA). Door(s) mounted. Compartment [#LOC].	$278
5380-0008	Compartment light package incandescent for small bodies.	$525
5380-0009	Compartment light package incandescent for medium bodies.	$783
5380-0011	Compartment light package LED for small bodies.	$1,868
5380-0012	Compartment light package Truck-Lite LED for medium bodies.	$3,125
5380-0014	Compartment light package ROM for small bodies. Includes one light per compartment (two if transverse). (OBSOLETE FROM VENDOR)	$2,033
5380-0015	Compartment light package ROM for medium bodies. Includes one light per compartment (two if transverse). (OBSOLETE FROM VENDOR)	$3,245

5380-0017	Compartment light package POK LED for small bodies. Includes one light per compartment (two if transverse).	$2,405
5380-0018	Compartment light package POK LED for medium bodies. Includes one light per compartment (two if transverse).	$3,931
5380-0020	Compartment light ROM 14-48" long additional (EA). Locate [#LOC]. (OBSOLETE FROM VENDOR)	$322
5380-0021	Compartment light ROM 49-84" long additional (EA). Locate [#LOC]. (OBSOLETE FROM VENDOR)	$477
5380-0022	Compartment light POK LED additional (EA). Locate [#LOC].	$347
5380-0023	Compartment light POK LED additional (EA). Locate [#LOC].	$595
5380-0027	Ground light package for cab and body - small.	$487
5380-0029	Ground light package for cab and body - large.	$731
5380-0030	Ground light package LED - small.	$1,591
5380-0032	Ground light package LED - large.	$2,381
5380-0033	Step light package body - small.	$455
5380-0036	Step light package body LED - small.	$1,557
5380-0042	Light recessed step Truck-Lite incandescent (additional). Locate [#LOC].	$125
5380-0045	Light recessed step Truck-Lite LED (additional). Locate [#LOC].	$191
5380-0060	Additional LED ground light (EA). Location: Below [#LOC].	$215
5380-0062	Compartment light Federal Signal LED additional (EA). Locate opposite of standard in compartment [#LOC].	$143
5380-0063	Compartment light Federal Signal LED additional (EA). Door(s) mounted. Compartment [#LOC].	$215
5380-0064	Compartment light package Federal Signal LED for small bodies.	$1,494
5380-0065	Compartment light package Federal Signal LED for medium bodies.	$2,540
5380-0067	Ground light package Federal Signal LED - small.	$1,591
5380-0068	Ground light package Federal Signal LED - large.	$2,382
5380-0069	Step light package body Federal Signal LED - small.	$1,195
5380-0071	Light Federal Signal recessed step LED (additional). Locate [#LOC].	$153
5380-0072	Additional Federal Signal LED ground light (EA). Location: Below [#LOC]	$201
5380-0075	Compartment light incandescent additional (EA). Locate on ceiling of [#LOC].	$78
5380-0076	Compartment light deluxe package Whelen PSC0CDCR LED for medium bodies. Light to be stacked vertically on both sides of compartment.	$8,167
5380-0077	Compartment light package Amdor Luma-Bar LED for medium bodies. Includes one light per compartment (two if transverse).	$2,563
5380-0078	Compartment light Amdor Luma-Bar LED 26-42" long additional (EA). Locate [#LOC].	$248
5380-0079	Compartment light Amdor Luma-Bar LED 48-74" long additional (EA). Locate [#LOC].	$378
5380-0081	Compartment light package Whelen LED for medium bodies.	$4,864
5380-0085	Compartment light package incandescent for small bodies.	$525
5380-0087	Compartment light package Weldon LED for medium bodies.	$2,089
5380-0088	Ground light package Weldon LED - small.	$1,434
5380-0089	Step light package body Weldon LED - small.	$1,044
5380-0090	Compartment light LED (EA). Location: [#LOC].	$203
5380-0098	Compartment light package Whelen PSC0CDCR LED for medium bodies. Light to be stacked vertically on one side of compartment.	$4,085
5380-0116	Ground light package Amdor Luma-Bar H2O LED - large.	$1,845
5380-0121	(2) Incandescent 4" round lights for use with preconnect module. Locate (1) each side on front compartment face down low.	$174
5380-0122	(2) Weldon LED 4" round lights for use with preconnect module. Locate (1) each side on front compartment face down low.	$255
5380-0123	Incandescent ground light package for cab, body and transverse/preconnect modules. Includes (1) light under each cab crew door (Lights under the driver and crew area exits to activate automatically with door is opened), (1) light under each side of the extended front bumper gravel shield (when applicable), (1) light centered each side below the transverse/preconnect module, (2) lights below rear tailboard area and (1) light centered below the pump operator compartment.	$598
5380-0124	Weldon LED ground light package for cab, body and transverse/preconnect modules. Includes (1) light under each cab crew door (Lights under the driver and crew area exits to activate automatically with door is opened), (1) light under each side of the extended front bumper gravel shield (when applicable), (1) light centered each side below the transverse/preconnect module, (2) lights below rear tailboard area and (1) light centered below the pump operator compartment.	$613
5380-0125	Incandescent body compartment light package for body and preconnect module. Lights locate (1) each preconnect tool compartment, (2) each for L1/R1, (1) each for L2/R2 and (2) each for L3/R3 (pump operator compartment to have the lights in the lower area only)	$783
5380-0126	Incandescent body compartment light package for body and transverse module. Lights locate (4) transverse module- (2) each on forward wall of each opening, (2) each for L1/R1, (1) each for L2/L3 and (2) each for L3/R3 (pump operator compartment to have the lights in the lower area only)	$701
5380-0127	LED body compartment light package for body and preconnect module. Lights locate (1) each preconnect tool compartment, (2) each for L1/R1, (1) each for L2/R2 and (2) each for L3/R3 (pump operator compartment to have the lights in the lower area only)	$1,115
5380-0128	LED body compartment light package for body and transverse module. Lights locate (4) transverse module- (2) each on forward wall of each opening, (2) each for L1/R1, (1) each for L2/R2 and (2) each for L3/R3 (pump operator compartment to have the lights in the lower area only)	$1,231
5380-0132	Compartment light Weldon LED additional (EA). Locate opposite of standard in compartment [#LOC].	$118
5380-0133	Light recessed step Weldon LED (additional). Locate [#LOC]	$129
5380-0138	Compartment light ROM V3 LED 24-36" long additional (EA). Locate [#LOC].	$275

5380-0141	Compartment light package ROM V3 LED for medium bodies. Includes one light per compartment (two if transverse).	$3,061
5380-0142	Compartment light package ROM V3 LED for medium bodies. Includes two lights per compartment (four if transverse).	$6,122
5380-0144	Compartment light package Amdor Luma-Bar LED for medium bodies. Includes two lights per compartment (four if transverse).	$5,125
5380-0146	Compartment light Amdor LED additional (EA) ceiling mounted as close to door opening as practical. Location: [#LOC].	$248
5380-0161	Light recessed step Truck-Lite incandescent. Locate one each side of top mount walkway.	$249
5380-0162	Light recessed step Truck-Lite LED. Locate one each side of top mount walkway.	$379
5380-0163	Light recessed step Federal Signal LED. Locate one each side of top mount walkway.	$306
5380-0166	Compartment light Trucklite LED additional (EA). Locate in [#LOC].	$203
5380-0181	Incandescent body compartment light package for body module. Lights locate (2) each for L1/R1, (1) each for L2/R2 and (2) each for L3/R3.	$346
5380-0182	Ground light package EON LED - large.	$1,335
5380-0183	TM Walkway lighting TecNiq EON LED. Includes (3) lights with S/S housings low on front of module to illuminate top mount walkway. eMAX only	$244
5380-0184	(2) 4" LED Federal Signal lights with black groumet and brackets. Locate (1) each side below the rear intermediate step. Wire to operate when park brake is set.	$300
5380-0185	Compartment light package Amdor Luma-Bar LED for Wildland.	$1,391
5380-0186	Hose bed lighting LED for Wildland.	$546
5380-0187	Compartment light package ROM V3 LED for small bodies. Includes one light per compartment (two if transverse).	$1,884
5380-0188	Compartment light package ROM V3 LED for small bodies. Includes two lights per compartment (four if transverse).	$3,765
5380-0189	Compartment light package Amdor Luma-Bar LED for small bodies. Includes one light per compartment (two if transverse).	$1,599
5380-0190	Compartment light package Amdor Luma-Bar LED for small bodies. Includes two lights per compartment (four if transverse).	$3,195
5380-0202	Step light package body EON LED - large.	$1,134
5380-0203	Step light package body EON LED - small.	$769
5380-0205	Cab step lighting package. Includes (2) EON LED lights per side.	$248
5380-0206	Cab step lighting package. Includes (4) EON LED lights per side.	$493
5380-0214	Compartment light Truck-Lite LED additional (EA). Locate on ceiling of [#LOC].	$203
5380-0216	Ground light package LED for chassis. Includes (6) Trucklite LED lts.	$1,368
5380-0218	Step light package Whelen LED - small.	$1,781
5380-0220	Compartment light package, Whelen Fluorent Plus, for medium bodies. Includes two lights per compartment (four if transverse).	$7,606
5380-0221	LED body compartment light package for body. Lights locate (2) each for L1/R1, (1) each for L2/R2, (2) each for L3/R3 and (2) each for L4/R4 (pump operator compartment to have the lights in the lower area only)	$1,231
5380-0223	Amdor LED strip lights for NFPA hose bed lighting. The lights to be mounted inside hose bed cover thru cover plate on outer skin. Light will illuminate the hose bed area thru slots in the inner skin.	$2,432
5380-0226	Compartment light Amdor white lumbar. Location: [#LOC].	$220
5380-0228	Stainless steel bolt on light guard to protect hose bed lightring fixture(s) from damage.	$118
5380-0235	Ground light package Amdor Luma Bar H2O LED - small.	$978
5380-0236	Additional LumaBar H20 LED ground light (EA). Location: Below [#LOC].	$169
5380-0238	Compartment light package Amdor Luma-Bar Red LED for small bodies. Includes one light per compartment (two if transverse).	$1,599
5380-0239	Whelen PELCC ground light package LED - large.	$2,883
5380-0240	Compartment light package Amdor Luma-Bar Red LED for medium bodies. Includes one light per compartment (two if transverse).	$2,563
5380-0245	Compartment light ROM V4 LED 24-36" long additional (EA). Locate [#LOC].	$275
5380-0246	Compartment light ROM V4 LED 42-72" long additional (EA). Locate [#LOC].	$461
5380-0249	Compartment light package ROM V4 LED for small bodies. Includes one light per compartment (two if transverse).	$1,884
5380-0250	Compartment light package ROM V4 LED for small bodies. Includes two lights per compartment (four if transverse).	$3,765
5380-0251	Compartment light package ROM V4 LED for medium bodies. Includes one light per compartment (two if transverse).	$3,061
5380-0252	Compartment light package ROM V4 LED for medium bodies. Includes two lights per compartment (four if transverse).	$6,122
5380-0259	Compartment light ROM V4 LED additional (EA) ceiling mounted as close to door opening as practical. Location: [#LOC].	$338
5380-0266	Whelen PELCC lights LED (PR). Wired through work light switch. Location: [#LOC].	$633
5380-0269	Light Whelen Super-LED dome model 60CREGCS, Red / White. QTY (6). Light Location: Rehab module ceiling configured as close to sales drawing illustration as possible. Switching: White lights shall be wired to a master on/off rocker switch on the REHAB switch panel located in the corner radio cabinet and through the entry door. The red lights shall be wired through the light assembly switch only.	$1,745
5390-0000	Deck light - Unity 12 volt (PR). Location: [#LOC].	$385
5390-0001	Hose bed light Unity. Locate at front area of hose bed. Switched with work light switch in cab.	$187
5390-0002	Hose bed light Federal Signal GH Scene. Locate at the front area of hose bed. Switched with work light switch in cab.	$242
5390-0003	Hose bed light Truck-Lite. Locate at the front area of the hose bed. Switched with work light switch in cab.	$112

5390-0004	Crosslay lights Weldon. Locate on each side at rear of crosslay (SM) or forward of crosslay (TM) approx. 16" from side of body.	$343
5390-0005	Crosslay light deck Unity. Locate to rear of crosslay (SM) or forward of crosslay (TM).	$182
5390-0006	Deck lights, Collins FX-12R (PR). Location: [#LOC].	$1,097
5390-0007	Deck/scene light circuit wiring through chassis reverse. Requires rear deck or scene light.	$81
5390-0008	Federal Signal GH scene lights (PR). Switch in cab (driver and officer side facing lights switched separately). Locate [#LOC].	$453
5390-0018	Whelen 600 series 26 degree scenelights (PR) with weatherproof connectors. Switch in cab (driver and officer side facing lights switched separately). Locate [#LOC].	$358
5390-0019	Whelen 700 series 8-32 degree scenelights (PR) with weatherproof connectors. Switch in cab (driver and officer side facing lights switched separately). Locate [#LOC].	$352
5390-0020	Whelen 900 series Gradient Opti-Scenelight (PR) with weatherproof connectors. Switched in cab (driver and officer side facing lights switched separately). Locate [#LOC].	$358
5390-0022	Crosslay light Truck-Lite. Locate to rear of crosslay (SM) and forward of crosslay (TM as applicable). Switched with work light switch in cab.	$112
5390-0023	Tomar 46H13-C 13 degree scene lights (PR) with weatherproof connectors. Switch in cab (driver and officer side lights switched separately). Locate [#LOC].	$398
5390-0024	Deck Light - Truck-Lite (PR). Location: [#LOC].	$333
5390-0025	Cab scene lights are to be switched with cab doors in addition to standard.	$81
5390-0026	Federal Signal GH Scene cornering lights (PR) wired to turn signals, reverse and work lights. Location: [#LOC]	$867
5390-0027	Hosebed light Whelen 600 series 26 degree scene light with Cast Products LH46501 housing. Locate at the front area of hosebed. Switched with worklight switch in cab.	$223
5390-0029	Crosslay light Whelen 600 series 26 degree scene light with Cast Products LH46501 housing. Locate to rear of crosslay (SM) and forward of crosslay (TM as applicable). Switched with worklight switch in cab.	$223
5390-0030	Deck Lts-Collins FX-6 (PR) Location: [#LOC]	$1,097
5390-0031	Crosslay light Federal GH Scene light with Cast Products LH90603 housings (PR). Locate on back of cab 1" below roof between vista windows.	$648
5390-0036	Hose bed light circuit wiring through chassis reverse. Requires hose bed light.	$81
5390-0038	4" LED light (black groument) with diamond plate box mount (PR). Locate (1) at front of hosebed and (1) at the crosslay area. Switch with work light switch.	$745
5390-0039	Federal Signal GH Scene lights (PR). Switch in cab (driver and officer side facing lights switched together). Locate [#LOC]	$453
5390-0040	Weldon 4 x 6 HID scene lights (PR) with weatherproof connectors. Switch in cab (driver and officer side lights switched separately). Locate [#LOC].	$1,272
5390-0041	Whelen 900 series Gradient Opti-Scene lights (PR) with diamond plate mounting box. Switch in cab (driver and officer side facing lights switched separately). Locate [#LOC].	$539
5390-0043	Crosslay light Trucklite. Locate forward of crosslay. Switched with work light switch in cab.	$112
5390-0046	Federal Signal GH Scene Light (PR). Locate (1) forward facing for preconnect storage lighting and (1) rearward facing for hosebed storage lighting. Both lights mounted in (1) formed box mounted off forward area of body. Box may shift side to side for best lighting application. both lights switched with worklight switch.	$822
5390-0047	Federal Signal GH scene Light. Locate rearward facing for hose bed storage lighting. Mounted in (1) formed box mounted off forward area of body. Box may shift side to side for best lighting application. Light switched with worklight switch.	$412
5390-0048	Whelen 600 series gradient Super LED scene lights (PR) with weatherproof connectors. Switch in cab (driver and officer side lights switched separately). Locate [#LOC].	$1,048
5390-0049	Whelen 600 series 26 degree scene lights (PR) with LH46001 castings. Switch in cab (side facing lights switched separately). Locate [#LOC].	$458
5390-0050	Whelen 500 series LED scene lights (PR) with weatherproof connectors. To be used as cornering lights wired to turn signals and four way flashers. Interlocked with park brake. Location: [#LOC]	$879
5390-0052	Federal Signal GH Scene lights (PR) with diamond plate mounting box. Switch in cab (driver and officer side facing lights switched separately). Locate [#LOC].	$822
5390-0054	Hosebed light Trucklite. Locate (1) each side front of hosebed. Switched with work light switch in cab.	$223
5390-0055	Light Federal Signal GH Scene. Locate at the front area of hosebed. Switched with worklight switch in cab. Includes diamond plate mounting box.	$412
5390-0056	Crosslay light Weldon. Locate to rear of crosslay (SM) or forward of crosslay (TM). Switched with work light switch in cab.	$174
5390-0057	Hosebed light Weldon. Locate at front area of hosebed. Switched with work light switch in cab.	$174
5390-0058	Deck Lights - Truck-Lite LED model 81380 (PR). Location: [#LOC].	$421
5390-0059	Whelen 600 series 26 degree scene lights (PR) with diamond plate mounting box. Switch in cab (side facing lights switched separately). Locate [#LOC].	$570
5390-0066	Whelen 600 series gradient Super LED scene lights (PR) with weatherproof connectors and diamond plate mounting boxes. Switch in cab (driver and officer side lights switched separately). Locate [#LOC].	$1,148
5390-0068	Havis Shield 12V HID scene lights model KR-4035X-D (PR). Location(s): [#LOC]. Includes switch in cab for side facing lights.	$1,659
5390-0069	Whelen M9 Linear Super LED scene lights (PR). Switched in cab (lights mtd on the sides of apparatus to be switched separately). Locate [#LOC].	$1,710
5390-0070	Crosslay light Collins FX-12. Locate to rear of crosslay (SM) and forward of crosslay (TM as applicable).	$551
5390-0071	Hosebed light Collins FX-12. Located center front of hosebed. Switched with work light switch in cab	$551
5390-0072	Speedlay Light Federal Signal GH Scene. Locate on front of upper pump module facing downward to illuminate speedlays. Switched with worklight switch in cab.	$242

5390-0073	Deck Light - Whelen LED model PFBP12C (PR). Location: [#LOC].	$1,110
5390-0075	Speedlay light Trucklite. Locate forward area of pump module. Switched with work light switch in cab.	$112
5390-0076	Hose bed light Truck-Lite LED model 81380. Locate at front of hose bed. Switched with work light switch in cab.	$212
5390-0077	Deck Lt-Collins FX-12R (EA) model KR-SB-312 with lift/push up pole. Due to body mount location a position indicator will not be required. Location(s): [#LOC].	$925
5390-0081	Deck Light - Grote LED model 63581 (PR) Location: [#LOC].	$1,746
5390-0082	Whelen 600 series 26 degree scene 24VDC lights (PR) with weatherproof connectors. Switch in cab (driver and officer side facing lights switched separately). Locate [#LOC].	$385
5390-0087	Whelen M6 Linear Super LED scene lights (PR). Switched in cab (lights mtd on the sides of apparatus to be switched separately). Locate [#LOC].	$1,229
5390-0088	Crosslay light Whelen PFBP12C LED. Locate to rear of crosslay (SM) and forward of crosslay (TM as applicable). Switched with work light switch in cab.	$556
5390-0089	Hose bed light Whelen PFBP12C LED. Locate center front of hose bed. Switched with work light switch in cab.	$556
5390-0090	Hosebed light Whelen 600 series Super LED scene light with diamond plate box. Locate at the front area of hosebed. Switched with worklight switch in cab.	$576
5390-0091	Crosslay light Whelen 600 series 26 degree Super LED scene light with diamond plate box. Locate to rear of crosslay (SM) and forward of crosslay (TM as applicable). Switched with worklight switch in cab.	$576
5390-0094	Federal Signal GH Scene light (EA). Switched with work light switch in cab. Locate up high center rear of body.	$228
5390-0096	Hosebed light Trucklite LED. Locate (1) in each outer hosebed upper front wall (if equipped) and (2) upper front wall of center hosebed . Switched with work light switch in cab.	$902
5390-0102	Crosslay light Truck-Lite LED model 81380. Locate to rear of crosslay (SM) and forward of crosslay (TM as applicable). Switched with work light switch in cab.	$212
5390-0103	Whelen 700 series gradient Super LED scene lights (PR) with weatherproof connectors. Switch in cab (driver and officer side lights switched separately). Locate [#LOC].	$1,017
5390-0109	Work lights, rear cab roof, (3) Truck-Lite halogen, option, Wildland.	$554
5390-0110	Hosebed light Grote LED model 63581. Locate center front of hosebed. Switched with work light switch in cab.	$874
5390-0111	Crosslay light Grote LED model 63581. Locate to rear of crosslay (SM) and forward of crosslay (TM as applicable). Switched with work light switch in cab.	$874
5390-0114	Whelen M6 Linear Super LED hosebed lights (PR) with weatherproof connectors and diamond plate mounting boxes. Locate equally spaced each side at the front area of hosebed. Switched with worklight switch in cab.	$1,412
5390-0118	Grote 63581 LED scene lights (6). Switch in cab (driver and officer side lights switched separately). Lights located (2) each side of body up high (offset forward and rearward) and (2) at rear of body up high. Wetside only.	$4,195
5390-0119	Light Whelen Pioneer Plus model PFP1 with ROM KR-SB-600-W4 pedestal side mount. Switched with work light switch in cab. Location(s): [#LOC].	$2,815
5390-0122	Whelen 900 series model 90C0ENZR Super LED Opti-Scene light (PR) with cast products mounting box. Switch in cab (driver and officer side lights switched separately). Locate [#LOC].	$1,911
5390-0123	Federal Signal model QL97LEDSCENE LED scene light (PR) with weatherproof connectors. Includes switch accessible to driver (driver and officer side lights switched separately). Locate [#LOC].	$1,024
5390-0126	Whelen M6 Linear Super LED hosebed light with weatherproof connector and diamond plate mounting box. Locate at the front area of hosebed. Switched with work light switch in cab.	$707
5390-0127	Light Whelen 600 series 26 degree Super LED scene light. Locate to rear of body, driver side, centered vertically between tail light and upper rear warning. Switched with work-light switch in cab.	$576
5390-0130	Deck light Whelen PAR-36, model PFBP12C LED (PR). Switched with work light switch in cab. Location: [#LOC].	$1,110
5390-0131	Crosslay light deck Unity. Locate light on the drivers side rearward of the crosslay door mounted on the Hot Shot II pan cover lid.	$182
5390-0132	Warning light Federal Signal QL64-BACKUP (PR) white with clear lens. Surface mounted with bezel. Location: [#LOC]	$638
5390-0133	Deck lights - Unity 12 volt LED spot (PR). Location: [#LOC].	$1,051
5390-0136	Whelen M9LZC Linear Super LED scene lights (PR), includes flange. Switched in cab (lights mounted on the sides of apparatus to be switched separately). Locate [#LOC].	$1,585
5390-0137	Whelen M9 Linear Super LED scene lights (PR) with weatherproof connectors and diamond plate mounting boxes. Switch in cab (driver and officer side lights switched separately). Locate [#LOC].	$1,891
5390-0139	Crosslay light Whelen PFBP12C LED (PR). Locate on each side at rear of crosslay (SM) or forward of crosslay (TM). Location: [#LOC]. Switched with work light switch in cab.	$1,110
5390-0140	Whelen 700 series gradient Super LED scene light (EA) with weatherproof connector(s). Switch in cab (driver and officer side lights if applicable switched separately). Locate [#LOC].	$499
5390-0141	Hosebed light Trucklite LED. Locate (1) in driver outer hosebed upper front wall and (2) upper front wall of center hosebed . Switched with work light switch in cab.	$676
5390-0143	Crosslay light deck Unity. Locate to driver side rear of crosslay.	$182
5390-0144	Unity deck light with model TP-1-I internal pull-up pole. Includes switch on lighthead and driver side overhead console. Location: [#LOC].	$617
5390-0149	Whelen 900 series model 90C0ENZR Super LED Opti-Scene light (EA) with diamond plate mounting box. Switch in cab (driver and officer side lights switched separately). Locate [#LOC].	$956
5390-0150	Whelen 900 series model 90C0ENZR Super LED Opti-Scene light (EA) with cast products mounting box. Switch in cab (driver and officer side light(s) switched separately). Locate [#LOC].	$956

5390-0151	Whelen M6 Linear Super LED scene lights (PR) with weatherproof connectors and diamond plate mounting boxes. Location: [#LOC]. Switched with worklight switch in cab.	$1,412
5390-0152	Whelen 600 series gradient Super LED surface mounted scene lights (PR) with weatherproof connectors. Switch in cab (driver and officer side lights switched separately). Locate [#LOC].	$1,048
5390-0154	Weldon model 3010-2600-30 scene lights (PR) with diamond plate mounting box. Switch in cab (driver and officer side facing lights switched separately). Locate [#LOC].	$778
5390-0155	Hose bed light Amdor H2O. Locate at the front area of hose bed. SideStacker only. Switched with work light switch in cab.	$358
5390-0156	Federal Signal model QL97LEDSCENE LED scene light (EA) with weatherproof connectors. Includes switch accessible to driver (driver and officer side lights switched separately). Locate [#LOC].	$513
5390-0157	Amdor Lumabar strip light on each side of the hosebed side upper extrusions. Switched with work light switch in cab.	$1,219
5390-0159	Whelen M6 Linear Super LED crosslay light with weatherproof connector and diamond plate mounting box. Locate to rear of crosslay (SM) and forward of crosslay (TM as applicable). Switched with work light switch in cab.	$707
5390-0161	Whelen M9 Linear Super LED scene lights (PR) with weatherproof connectors and smooth plate mounting boxes painted job (2-tone if applicable) color. Switch in cab (driver and officer side lights switched separately). Locate [#LOC].	$1,947
5390-0162	Hose bed lights (2) Federal Signal GH Scene. Locate in the upper front wall of the hose bed. One (1) each side equally spaced from the outside of the hose bed. Switched with the work light switch in cab.	$483
5390-0163	ROM V4 LED strip lights for NFPA hose bed lighting. The lights to be mounted inside hose bed cover thru cover plate on outer skin. Light will illuminate the hose bed area thru slots in the inner skin.	$1,730
5390-0164	Whelen 900 series model 9SC0ENZR Super LED Opti-Scene light (PR) with weatherproof connectors. Switch in cab (driver and officer side lights switched separately). Locate [#LOC].	$1,729
5390-0165	Whelen 900 series model 9SC0ENZR Super LED Opti-Scene light (PR) with diamond plate mounting box. Switch in cab (driver and officer side lights switched separately). Locate [#LOC].	$1,911
5390-0166	FRC LED900 Scene light (EA). Switch in cab (driver and officer side lights switched separately). Locate [#LOC].	$861
5390-0168	Hosebed light Trucklite model 44 LED (5). Locate equally spaced on upper front wall of hosebed . Switched with work light switch in cab.	$1,128
5390-0169	Deck light FireTech, model FT-WL3500-60 LED (PR). Switched with work light switch in cab. Location: [#LOC].	$797
5390-0170	Whelen M6 Linear Super LED scene light (EA). Switched in cab (lights mtd on the sides of apparatus to be switched separately). Locate [#LOC].	$615
5390-0171	Whelen M6 Linear Super LED hosebed lights (PR) with weatherproof connectors and smooth plate mounting boxes painted Durabak black. Locate equally spaced each side at the front area of hosebed. Switched with worklight switch in cab.	$1,455
5390-0172	Amdor Lumbar H2O LED strip lights for NFPA hose bed lighting. The lights to be mounted inside hose bed cover thru cover plate on outer skin. Light will illuminate the hose bed area thru slots in the inner skin.	$1,730
5390-0173	Federal Signal model 64LEDSCENE LED scene light (PR) with weatherproof connectors. Includes switch accessible to driver (driver and officer side lights switched separately). Locate [#LOC].	$1,070
5390-0176	Hose bed light ROM V4 LED 42-72" long. Locate forward area of hose bed up high. Switched with work light switch in cab.	$461
5390-0177	Crosslay light ROM V4 LED 42-72" long. Locate forward area of hose bed up high. Switched with work light switch in cab.	$461
5390-0178	Light Whelen PFBP6C LED. Locate above L2 on compartment top. Switched through ignition.	$505
5390-0180	Crosslay light Truck-Lite LED model 81380. Locate on the forward upper surface of the pump module over the speedlay module to light from above during hose loading operations. Switched with work light switch in cab.	$212
5390-0182	Crosslay light Amdor H2O. Locate at the front body above crosslay. Switched with work light switch in cab.	$499
5390-0183	Crosslay light Truck-Lite LED model 81380. Locate on front of body up high. Switched with work light switch in cab.	$212
5390-0184	FireTech 8" 12V double stack mini brow light (PR). Includes switch in cab (driver and officer side facing lights switched separately). Location: [#LOC].	$2,085
5390-0185	Hose bed light Federal Signal 64LEDSCENE. Locate at the front area of hose bed. Switched with work light switch in cab. Includes diamond plate mounting box.	$637
5390-0186	FRC SPA900-Q70 Scene light (PR). Switch in cab (driver and officer side lights switched separately). Locate [#LOC].	$1,720
5390-0187	Whelen 900 series model 9SC0ENZR Super LED Opti-Scene light (1 EA) with weatherproof connector. Switch in cab (driver and officer side lights switched separately). Locate [#LOC].	$865
5390-0188	Diamond plate mounting boxes (4). For use with scene lights and/or warning lights. Locate on driver and officer side forward and rearward compartment tops outboard; boxes to be full depth of compartment top.	$903
5400-0003	Engine compartment light (EA).	$132
5400-0004	Incandescent pump panel light - additional (EA). Location: [#LOC].	$99
5400-0005	Pump panel LED light package with (2) Whelen strip lights per side pump panel. Not available on panels over 45" wide. Side mount only.	$828
5400-0006	Pump panel LED light package with (3) lights per side pump panel. Pump panels over 45" may require additional lights. Side mount only.	$1,189
5400-0007	LED pump panel light - additional (EA). Location: [#LOC].	$203
5400-0008	(1) pump panel light over the pump control area to be wired to come on when pump shift is placed in pump. (Side mount forward light noted, Top Mount is center light.)	$42

5400-0009	Pump panel LED light package - top mount. Includes (2) lights per side pump panel and (3) lights for top mount panel. Side pump panels over 45" wide may require additional lights. Top mount only.	$1,391
5400-0010	Incandescent pump compartment light (EA).	$142
5400-0011	LED pump compartment light (EA).	$382
5400-0020	Federal NightFighter light with internal pole. Locate [#LOC]. Switched on light head.	$1,325
5400-0021	Federal NightFighter Light with External Pole. Locate [#LOC]. Switched on light head.	$2,293
5400-0026	Fog lights clear (PR) installed [#LOC].	$282
5400-0031	Pair of Cab Dome Large Lights mounted driver and officer side front. N/A on E-One Chassis. Required on Comm Chassis.	$78
5400-0032	Pair of Cab Dome Large Lights mounted driver and officer side Rear. N/A on E-One Chassis or two door commercial chassis. Required on Comm Chassis.	$78
5400-0037	Dome Lts Red/White Incandescent. Package includes two lights mounted in the front and two mounted in the rear of the cab. White light wire through door and light assembly mounted switch. Red light through light assembly mounted switch.	$570
5400-0039	Spotlight Specialty 2150 hand held located on officer's side of cab dash - hardwired.	$400
5400-0041	Spotlight, Federal Visibeam II Remote. If one is selected it will be located centered on cab roof mounted on a bracket. If two are selected, they will be located one each side of cab roof to rear of light bar.	$705
5400-0042	Map light, Sunnex [#LOC].	$342
5400-0043	Maplight-Little Lt 18" Flex [#LOC]. Includes on/off switch.	$231
5400-0047	Pump panel light package with (3) lights per side pump panel. Pump panels over 45" may require additional lights. Side mount only.	$668
5400-0048	Pump panel light package - top mount. Includes (2) lights per side pump panel and (3) lights for top mount panel. Top mount only.	$776
5400-0059	Optronics model QH-3000 handheld 12v spotlight. To be hardwired on officer's side of cab dash.	$155
5400-0061	Golight model 2049 remote control spotlight with black housing. If one is selected it will be located centered on cab roof on a pedestal to rear of light bar. If two are selected, they will be located one each side of cab roof to rear of light bar.	$881
5400-0062	Code 3 model GLB3200 remote control spotlight with black housing. If one is selected it will be located centered on cab roof on a pedistal to rear of lightbar. If two are selected, they will be located one each side of cab roof to rear of lightbar.	$1,259
5400-0073	Code 3 LED 85BZR lights. (4) pair. Locate (2) 85BZR red with clear lenses each side of body outboard of recessed quarts lights, (1) 85BZR amber with clear lenses each side on the rear compartment face up high and (1) 85BZR amber with clear lenses each side on the rear compartment face in-line with bottom area of hosebed. Switch seperately from lower and upper level warning lights.	$1,087
5400-0076	Golight model 2020 permanent spotlight. Location: Centered top of lightbar.	$698
5400-0080	FRC Night Master light with external push-up pole. Locate [#LOC]. Switched on light head.	$1,268
5400-0081	Golight model 2067 remote control spot light with white housing. If one is selected it will be located centered on cab roof on a pedestal to rear of light bar. If two are selected, they will be located one each side of cab roof to rear of light bar.	$881
5400-0082	Maplight-Little Lt 18" Flex [#LOC]. Includes dimmer switch.	$231
5400-0085	Enclose pump panel LED light package with (3) lights per side pump panel. Side mount only.	$1,585
5400-0086	Spotlight Specialty 2150 hand held located on font of map box - hardwired.	$400
5400-0091	Zico cornering light (PR) with polished stainless steel housing model #ZQL-SS-H7614 wired through turn signals. Includes cornering light relay. Lights to be directed downward. Location: (1) each side of gravel shield (forward).	$1,048
5400-0092	Weldon pump panel LED light package with (3) lights per side pump panel. Pump panels over 45" may require additional lights. Side mount only.	$969
5400-0097	Maplight-Havis Shield 12" Flex LED. Location: [#LOC].	$257
5400-0098	Pump panel LED light package with (3) Whelen 4"round lights per side pump panel. Pump panels over 45" may require additional lights. Side mount only.	$1,189
5400-0104	Spotlight Specialty 2150 hand held located on officer's side, side facing engine cover offset forward below cab dash - hardwired.	$400
5400-0105	Weldon pump panel LED lighting package with (3) lights for pump operator panel (with shield) and (3) lights for rear pump panel. Rear Mount only.	$479
5400-0106	Pump panel incandescent lighting package with (3) lights for pump operator panel (with shield) and (3) lights for rear pump panel. Rear Mount only.	$668
5400-0107	Weldon pump panel LED light package - top mount. Includes (2) lights per side pump panel and (3) lights for top mount panel. Side pump panels over 45" wide may require additional lights. Top mount only.	$1,094
5400-0108	Cab Dome Large Lights mounted centered over front seat. N/A on E-0ne Chassis. Required on Comm Chassis.	$40
5400-0109	Weldon LED pump panel light - additional (EA). Location: [#LOC].	$151
5400-0112	Backing light (PR) Innovative LIghting with polished housing model #580-0200-1, light bulb is a halogen MR16. Location: [#LOC].	$374
5400-0125	SpotLt-Fed VisibeamII Remote. Officer side of cab roof to rear of lightbar mounted on a bracket.	$705
5400-0127	Top mount pump module LED lighting. Includes (3) lights located along the upper top mount control panel, (2) side pump panel lights - (1) driver side and (1) officer side and (2) top mount walkway lights.	$882
5400-0130	Spotlight Optronics Blue Eye model KB4003 hand held located on officer's side of cab dash - hardwired.	$239
5400-0131	Pump panel LED light package Amdor Luma Bar H2O. Includes (1) light per side pump panel (2 driver if split panel). Side mount only.	$970
5400-0132	Incandescent pump panel and runningboard lighting package. Includes (3) lights shield mounted on the driver side and (1) 4" recessed light mounted on the officer side compartment face.	$668

5400-0133	Golight model 2067 remote control spotlight with white housing. Locate (1) each side cab corner outboard of forward facing lightbar without pedestal. Requires additional side facing warning lights to meet NFPA.	$881
5400-0136	Pump panel incandescent lighting package with (3) lights for pump operator panel (with shield). Rear Mount only.	$359
5400-0137	Pump panel LED light package for side mount eMAX. Includes (6) TecNiq EON lights with S/S housings, located (3) each side above lower side intake/discharge panels. Includes S/S light shields. SM eMAX only.	$396
5400-0139	Pump panel LED light package for top mount. Includes (12) TecNiq EON lights with S/S housings, (6) for TM panel and (3) each side for lower side intake / discharge panels. Includes S/S light shields for side panels.	$706
5400-0140	Spotlight Collins CL-12-M handheld located to officer's side cab dash area. Light to be hardwired and bracket (Handlelok 1004) to be mounted to the dash area within reach of the officer.	$482
5400-0142	Under mount side mount pump panel LED lighting. Includes (4) pump panel lights (3 driver and 1 officer).	$421
5400-0145	Pair of Cab Dome Large Lights mounted driver (clear) and officer (red) side front. N/A on E-One Chassis. Required on Comm Chassis.	$78
5400-0149	Pump panel Amdor H2O LED light package with (3) lights per side pump panel. Pump panels over 45" may require additional lights. Side mount only.	$978
5400-0151	Pump compartment light EON LED. Wired to work light.	$228
5400-0154	Spotlight Specialty 2150 hand held located on center of cab dash with plug-in connector.	$400
5400-0155	Cab Dome Large Light (PR). (1) mounted centered centered in the front and rear headliners. N/A on E-0ne Chassis. Required on Comm Chassis.	$78
5400-0157	Spotlight Whelen PAR46 Super LED hand held located on officer's side of cab dash - hardwired. Mounted to not obstruct driver view of passenger corner mounted mirror (if equipped).	$656
5400-0159	Optronics model QH-100 handheld 12v spotlight. To be hardwired on officer's side of cab dash.	$155
5400-0165	Pump compartment light EON LED. Light shall be switched from the cab dash with the work light switch.	$228
5400-0167	(1) pump panel light over the pump control area to be wired to come on when pump shift is placed in pump. (Rearward light.)	$42
5400-0168	Whelen LED pump compartment light (EA).	$290
5400-0171	Compartment light EON LED IPOS. Location of light(s): [#LOC].	$149
5400-0172	Pump panel LED light package for side mount. Includes (3) Tecniq EON lights with S/S housings. Includes S/S light shield. Rear mount only.	$316
5400-0173	Spotlight Whelen PAR46 Super LED hand held located on officer's side of cab dash with plug-in connector.	$656
5400-0174	Pump panel light package with (3) On Scene Solutions lights per side pump panel. Pump panels over 45" may require additional lights. Side mount only.	$1,129
5400-0177	Top mount pump module LED lighting Whelen PELCC. Includes (3) lights located along the upper top mount control panel, (2) side pump panel lights - (1) driver side and (1) officer side.	$1,929
5400-0182	(1) pump panel light (center light) over the pump control area to be wired to come on when pump shift is placed in pump.	$42
5400-0188	Golight model 30201 remote control HID spot light with white housing. If one is selected it will be located centered on cab roof on a pedestal to rear of light bar. If two are selected, they will be located one each side of cab roof to rear of light bar.	$959
5400-0189	Golight model 2020 permanent spotlight with white housing. Centered on forward cab roof.	$881
5400-0190	Weldon/EON pump panel LED light package with (1) Weldon, (2) EON driver pump panel and (3) Weldon officer pump panel. Pump panels over 45" may require additional lights. Side mount only.	$969
5400-0192	Amdor H2O pump panel LED light package - top mount. Includes (2) lights per side pump panel and (3) lights for top mount panel. Side pump panels over 45" wide may require additional lights. Top mount only.	$1,133
5400-0194	(1) pump panel light (center light) over each side mount pump control area to be wired to come on when pump shift is placed in pump.	$84
5400-0196	TecNiq LED backing lights (PR) model E960. Location: [#LOC].	$454
5400-0198	Map light, Sunnex LED model SL9-220. Location: [#LOC].	$737
5400-0199	Pump panel light additional EON LED. Locate (2) driver side up high and (2) officer side up high.	$122
5450-0003	Quartz light KwikRaze 500W/110V model KR-905-I with internal telepole. Location(s): [#LOC]	$713
5450-0004	Quartz light KwikRaze 500W/110V model KR-SB-505-W/2-I with external telepole. Location(s): [#LOC]	$1,120
5450-0005	Quartz light Kwik Raze 500W/110V portable. Location(s): [#LOC].	$454
5450-0006	Quartz light KwikRaze 500W/110V model KR-SB-805-TM-I with external mount tripod telepole. Requires 110V receptacle. Location(s): [#LOC]	$1,662
5450-0007	Quartz light Kwik Raze 500W/110V with recess mount. Location(s): [#LOC].	$1,034
5450-0008	Quartz light Fire Research Focus 750W/110V model FCA510E-S75-SW with internal pull-up pole. Location(s): [#LOC].	$1,579
5450-0009	Quartz light Fire Research Focus 750W/110V model FCA530-S75-SR-SW with side mount push-up pole. Location(s): [#LOC].	$1,669
5450-0010	Quartz light Fire Research Focus 1000W/240V model FCA200-M12 with recess mount. Location(s): [#LOC].	$887
5450-0011	Quartz light Fire Research Optimum 900W/240V model OPA200-R90 with recess mount. Location(s): [#LOC].	$1,160
5450-0012	Quartz light Fire Research Focus 750W/110V model FCA570-S75 without pole. Location(s): [#LOC].	$1,232
5450-0015	Quartz light Fire Research Focus 750W/120V model FCA600-S75-ON-FC603 with 40" telescopic tripod pole. Location(s): [#LOC].	$1,689
5450-0019	Quartz light Fire Research Focus 750W/110V model FCA802-S75-01 with brow mount (EA). Location(s): [#LOC].	$955

5450-0020	Quartz light Fire Research Focus 1500W/240V model FCA600-M15-ON-FC603 with telescopic tripod pole. Location(s): [#LOC].	$1,780
5450-0021	Quartz light Fire Research Optimum 750W/110V model OPA570-S75 without pole. Location(s): [#LOC].	$1,305
5450-0023	Quartz light Fire Research Optimum 150W/12V model OPA510E-HD15-SW with internal pole. Includes switch accessible to driver. Location(s): [#LOC].	$1,928
5450-0024	Quartz light Fire Research Optimum 750W/110V model OPA510E-S75-SW with internal pull up pole. Location(s): [#LOC].	$1,628
5450-0028	Quartz light Fire Research Optimum 750W/110V model OPA530-S75-SR-SW with side mount external pole. Location(s): [#LOC].	$1,716
5450-0030	Quartz light Fire Research Optimum 750W/110V model OPA600-S75-ON-OP603 with 40" telescopic tripod pole. Location(s): [#LOC].	$1,706
5450-0031	Quartz light Fire Research Optimum 750W/110V model OPA802-S75-01 with brow mount (EA). Location(s): [#LOC].	$1,021
5450-0032	Quartz light Fire Research Optimum 900W/240V model OPA600-R90-ON-OP603 with telescopic tripod pole. Location(s): [#LOC]	$1,814
5450-0033	Quartz light Fire Research Optimum 150W/12V model OPA530-HD15-SR-SW with side mount external pole. Includes switch accessible to driver. Location(s): [#LOC].	$2,152
5450-0034	Quartz light MagnaFire 900W/240V model KR-739-HD with portable base. Requires 220V receptacle. Location(s): [#LOC]	$666
5450-0035	Quartz light MagnaFire 900W/240V model KR-1939 with recess mount. Location(s): [#LOC].	$919
5450-0036	Quartz light MagnaFire 900W/240V model KR-SB-639 without pole. Location(s): [#LOC].	$1,066
5450-0037	Quartz light MagnaFire 900W/240V model KR-939-I with internal pole. Location(s): [#LOC].	$1,013
5450-0038	Quartz light MagnaFire 900W/240V model KR-SB-539-W/2-I with external pole. Location(s): [#LOC].	$1,326
5450-0039	Quartz light MagnaFire 900W/240V model KR-SB-839-TM-I with external mount tripod telepole. Requires 220 volt receptacle. Location(s): [#LOC].	$1,442
5450-0040	Quartz light MagnaFire 900W/240V model KR-1339 with low profile mount. Location(s): [#LOC]	$1,053
5450-0045	Quartz light MagnaFire 750W/120V model KR-736-HD with portable base. Requires 110V receptacle. Location(s): [#LOC]	$614
5450-0046	Quartz light MagnaFire 750W/120V model KR-1936 with recess mount. Location(s): [#LOC].	$954
5450-0048	Quartz light MagnaFire 750W/120V model KR-936-I with internal pole. Location(s): [#LOC].	$1,094
5450-0049	Quartz light MagnaFire 750W/120V model KR-SB-536-W/2-I with external pole. Location(s): [#LOC].	$1,390
5450-0050	Quartz light MagnaFire 750W/120V model KR-SB-836-TM-I with external mount tripod telepole. Requires 110V receptacle. Location(s): [#LOC].	$1,601
5450-0051	Quartz light MagnaFire 750W/120V model KR-1336 with low profile mount. Location(s): [#LOC]	$982
5450-0056	Quartz light KwikRaze 1500W/220V model KR-SB-815-TM-I with external mount tripod telepole. Requires 220V receptacle. Location(s): [#LOC]	$1,722
5450-0058	Quartz light Fire Research Optimum 1500W/240V model OPA510E-M15-SW with internal pull-up pole. Location(s): [#LOC].	$1,738
5450-0059	Quartz light Fire Research Optimum 750W/110V portable model OPA700-S75-OP703. Location(s): [#LOC].	$869
5450-0060	Quartz light Fire Research Focus 750W/120V model FCA300U-S75 with brow mount. Location: Center of cab brow.	$955
5450-0063	Quartz light Fire Research Optimum 900W/240V model OPA530-R90-SR-SW with bottom raise pole. Location(s): [#LOC].	$1,716
5450-0064	Quartz light Fire Research Focus 500W/120V model FCA200-S50 with recess mount. Location(s): [#LOC].	$972
5450-0065	Quartz light Fire Research Optimum 1000W/240V model OPA656-M12-ON-OP603 with telescopic tripod pole. Location(s): [#LOC]	$1,814
5450-0066	Quartz light Fire Research Optimum 1500W/240V model OPA512-M15-SW with internal thru roof push up pole. Location(s): [#LOC]	$1,812
5450-0070	Quartz light MagnaFire 5000 500W/120V model KR-SB-555-W/2-I with external pole. Location(s): [#LOC].	$1,204
5450-0071	Quartz light Fire Research Optimum 750W/110V model OPA200-S75 with recess mount. Location(s): [#LOC].	$1,038
5450-0072	Quartz light Fire Research Optimum 1500W/240V model OPA100 with internal pole. Location(s): [#LOC].	$1,598
5450-0074	Quartz light timer (ea).	$145
5450-0075	Quartz light Fire Research Optimum 900W/240V model OPA510E-R90-SW with top raise pole. Location(s): [#LOC].	$1,716
5450-0081	Quartz light Fire Research Optimum 750W/110V model OPA656-S75-ON-OP603 with 28" telescopic tripod pole. Location(s): [#LOC]	$1,706
5450-0082	Quartz light Fire Research Focus 750W/110V model FCA656-S75-ON-FC603 with 28" telescopic tripod pole. Location(s): [#LOC].	$1,689
5450-0083	Quartz light Fire Research Focus 1500W/240V model FCA530-M15-SR-SW with side mount push up pole. Location(s): [#LOC].	$1,675
5450-0084	Quartz light Fire Research Focus 150W/12V model FCA510E-D15-SW with internal pole. Includes switch accessible to driver. Location(s): [#LOC].	$1,200
5450-0089	Quartz light MagnaFire 900W/240V model KR-SB-539-W/2-I with external pole. Light head to be powder coated black. Location(s): [#LOC].	$1,375
5450-0091	Quartz light Fire Research Optimum 900W/240V model OPA200-R90 with recess mount. Location(s): [#LOC]. Includes plate stand-off box to allow lights to recess without intruding into hosebed area.	$1,279
5450-0092	Quartz light Fire Research Focus 750W/110V model FCA530-S75-SR-SW with side mount push-up pole. Light head and mounts to be powder coated black. Location(s): [#LOC].	$1,719
5450-0094	Quartz light Extenda-Lite 750W/110V model E-4750-EX-TL-UI-EX. Location(s): [#LOC].	$908

5450-0096	Quartz light Fire Research Optimum 1000W/110V portable model OPA700-M10-OP703. Location(s): [#LOC].	$992
5450-0098	Quartz light Fire Research Optimum 1500W/240V model OPA600-M15-ON-OP603 with telescopic tripod pole. Location(s): [#LOC]	$1,886
5450-0099	Quartz light Fire Research Optimum 1500W/240V model OPA200-M15 with recess mount. Location(s):[#LOC].	$1,059
5450-0102	Quartz light Fire Research Focus 1000W/120V model FCA530-M10-SR-SW-ON with external push up pole. Location(s): [#LOC].	$1,780
5450-0114	Quartz light Fire Research Focus 1000W/120V model FCA200-M10 with recess mount. Location(s): [#LOC].	$887
5450-0116	Quartz light Fire Research Focus 500W/110V model FCA600-S50-ON-FC603 with 40" telescopic tripod pole. Location(s): [#LOC].	$1,689
5450-0118	Quartz light Fire Research Focus 1000W/240V model FCA802-M12-01 with brow mount (EA). Location(s): [#LOC].	$1,013
5450-0121	Quartz light Fire Research Focus 1500W/240V model FCA530-M15-SR-SW-ON with external push up pole. Location(s): [#LOC].	$1,692
5450-0123	Light Whelen Pioneer Plus LED model PFP2 12V with PBAPEDD pedestal mount. Includes switch in cab (side facing lights switched separately). Location(s): [#LOC].	$2,360
5450-0126	Quartz light Fire Research Focus 750W/110V model FCA642-S75-ON-FC6F3 with 16.625" telescopic tripod pole. Location(s): [#LOC].	$1,689
5450-0141	Quartz light Fire Research Optimum 150W/12V model OPA230-H15 with recess mount. Includes switch in cab console. Location(s): [#LOC].	$1,642
5450-0144	Fire Research Evolution 12V LED scene light model FCA530-V15-SW-H with external push-up pole. Includes switch in cab accessible to driver. Location: [#LOC].	$2,418
5450-0152	Pair FRC LTA530-DT 250W 12V lights with side mount push up pole. (1) each side front compartment face.	$1,500
5450-0154	Fire Research Evolution 12V LED scene light model FCA510E-V15-SW with internal pull-up pole. Includes switch accessible to driver. Location: [#LOC].	$2,418
5450-0160	Quartz light Fire Research Focus 300W/12V model FCA530-D30-SR-SW with side mount external pole. Includes switch accessible to driver. Location(s): driver and officer side, (1) each side on body offset forward.	$1,693
5450-0161	Light Whelen 12V Pioneer model PCP2 with internal push-up pole mount (Havis KR-SB-4PCP2-S-I). Includes switch on light head. Location(s): [#LOC].	$2,442
5450-0166	Light Whelen Pioneer Plus model PFP2AC 120V with recess mount. Location(s): [#LOC].	$2,708
5450-0168	Floodlight Whelen/ROM model KR-SB-8PFP2-SL-I-TM with external mount tripod telepole. Location(s): [#LOC].	$2,936
5450-0169	Quartz light MagnaFire 750W/120V model KR-SB-836-TM-SL-I with external mount tripod telepole. Requires 110V receptacle. Location(s): [#LOC].	$1,601
5450-0170	Fire Research Evolution 12V LED model FCA210-V12 with recess mount. Includes switch in cab accessible to driver. Location(s): [#LOC].	$1,918
5450-0176	Light Whelen Pioneer Plus LED model PFP2 12V with pedestal mount powder coated black. Includes switch in cab (side facing lights switched separately). Location(s): [#LOC].	$2,360
5450-0188	Quartz light MagnaFire 5000 500W/120V model KR-SB-555-W/2-I-SL with (special length) external pole. Location(s): [#LOC].	$1,204
5450-0193	Light Fire Research Spectra LED 110V model SPA510-K20 with internal pull-up pole. Location(s): [#LOC].	$2,582
5450-0194	Light Whelen Pioneer model PCP2 with PBA203 recess mount. Includes switch in cab accessible to driver (driver and officer side facing lights switched separately). Location: [#LOC].	$2,313
5450-0195	Whelen Micro Pioneer Series Super LED Work/Scene Light Model MPR15W with 15 degree recess mount. Includes switch accessible to driver (side facing lights switched seperately). Location: [#LOC].	$765
5450-0197	Light Whelen Pioneer model PFP2 12V powder coated FLNA3225E-1 red with internal top raise pole mount (ROM model KR-9PFP2-S). Includes switch on light head. Location: [#LOC].	$2,228
5450-0204	Light Whelen Micro Pioneer Plus model MPBW with bail mount. Includes switch in cab accessible to driver (side facing lights switched separately). Location: [#LOC].	$769
5450-0210	Light Fire Research Spectra LED 240V model SPA570-J20 without pole. Location(s): [#LOC].	$2,673
5450-0211	Light Fire Research Spectra 240V LED model SPA512-J20-SW with internal thru roof push up pole. Includes switch accessible to driver. Location(s): [#LOC].	$3,078
5450-0212	Quartz light Fire Research Focus 1500W/240V model FCA570-M15 without pole. Location(s): [#LOC].	$1,344
5450-0218	Fire Research Evolution 12V LED model FCA210-V12 with recess mount powder coated black. Includes switch in cab accessible to driver. Location(s):[#LOC].	$1,963
5450-0220	Quartz light MagnaFire 750W/120V model KR-1936 with recess mount in diamond plate mounting box. Location(s): [#LOC].	$1,132
5450-0222	Quartz light MagnaFire 750W/120V model KR-1336 with low profile mount. Light head to be powder coated black. Location(s): [#LOC]	$1,074
5450-0223	Quartz light MagnaFire 750W/120V model KR-SB-536-W/2-I with external pole. Light head to be powder coated black. Location(s): [#LOC].	$1,443
5450-0224	Quartz light Fire Research Focus 1000W/120V model FCA600-M10-ON-6F3 with telescopic tripod pole. Location(s): [#LOC].	$1,827
5450-0227	Light Whelen Pioneer Plus LED model PFP1 12V with PBAPEDD pedestal mount. Includes switch in cab (side facing lights switched separately). Location(s): [#LOC].	$1,681
5450-0230	Floodlight Whelen/ROM model KR-SB-8PFP2AC-I-TM with external mount tripod telepole. Pole length required shall be determined upon mounted location. Requires 110V receptacle. Location(s): [#LOC].	$2,936
5450-0231	Light Whelen Pioneer Plus LED model PFP2 12V with PBAPEDD pedestal mount powder coated black housing, mounting brackets applicable shall also be black. Includes switch in cab (side facing lights switched separately). Location(s): [#LOC].	$2,408

5450-0236	Light Whelen 150W/120V model KR-7PFPAC2-HD with portable base, powder coated black and Fire Power FP11 male pigtail. Requires 110V receptacle. Location(s): [#LOC].	$3,087
5450-0241	Light Whelen Pioneer Plus model PFP2 12V with International center brow mount model PBAINTC. Includes switch in cab accessible to driver. 4400 & 7400 chassis only.	$2,385
5450-0244	Light Whelen Pioneer Plus LED model PCP3 12V combination flood and 8 degree spotlight with pedestal mount adapter. Includes switch in cab (side facing lights switched separately). Location(s): [#LOC].	$2,687
5450-0246	Light Whelen Micro Pioneer Plus model MPBB with bail mount powder coated black. Includes switch in cab accessible to driver (side facing lights switched separately). Location: [#LOC].	$769
5450-0247	Quartz light MagnaFire 750W/120V model KR-1936 with recess mount powder coated black. Location(s): [#LOC].	$997
5450-0248	Quartz light Fire Research Optimum 1000W/240V model OPA510E-M12-SW with internal pull up pole. Location(s): [#LOC].	$1,738
5450-0255	Light Fire Research Evolution LED 12V model FCA580-V15 side fixed mount. Includes switch accessible to driver. Location(s): [#LOC].	$1,969
5450-0256	Floodlight Whelen PFP1AC 120v with external mount tripod telepole. Requires 110V receptacle. Location(s): [#LOC].	$2,672
5450-0257	Light Whelen Pioneer model PFP2 12V with external bottom raise pole mount. Includes switch accessible to driver. Location(s): [#LOC].	$2,631
5450-0258	Light Whelen Pioneer Plus model PFP2 12V with internal top raise pole mount. Includes switch accessible to driver. Location: [#LOC].	$2,379
5450-0259	Floodlight Whelen PFP2AC 110V with external mount 50" tripod telepole. Requires 110V receptacle. Location(s): [#LOC].	$3,309
5450-0260	Light Whelen Pioneer model PCP2AP 120V with external bottom raise pole mount. Location(s): [#LOC].	$2,978
5450-0261	Light Whelen Pioneer model PFP2AC 120V with external bottom raise pole mount. Location(s): [#LOC].	$2,738
5450-0262	Light Whelen Pioneer model PFP2 12V with external bottom raise pole mount. Includes switch accessible to driver. Location(s): [#LOC].	$2,646
5450-0265	Light Whelen Pioneer model PFP2AC 120V with internal top raise pole mount. Location: [#LOC].	$2,674
5450-0266	Light Whelen Pioneer Plus model PFP2 12V with recess mount. Includes switch accessible to driver (driver and officer switched seperately) and diamond plate mounting boxes for recess mount. Location: [#LOC].	$2,556
5450-0267	Light Whelen 150W/120V with portable base. Requires 110V receptacle. Location(s): [#LOC].	$2,469
5450-0269	Light Fire Research Spectra LED 110V model SPA510-K20 with internal pull-up pole powder coated black. Location(s): [#LOC].	$2,635
5450-0270	Fire Research Evolution 12V LED scene light model FCA510E-V15-SW with internal pull-up pole powder coated black. Includes switch accessible to driver. Location: [#LOC].	$2,472
5450-0271	Akron SceneStar 120V LED model ELSS-XLAC-SM2-PS-UI-TL. Location: [#LOC].	$2,360
5450-0272	Light Whelen Pioneer model PFP2AC 120V powder coated black with internal bottom raise pole mount. Location: [#LOC].	$2,674
5450-0273	Quartz light Fire Research Optimum 1500W/240V model OPA642-M15-ON-603 with 16.625" telescopic tripod pole. Location(s): [#LOC].	$1,773
5450-0277	Light Whelen Pioneer model PFP2 12V powder coated black with external bottom raise pole mount. Includes switch accessible to driver. Location(s) [#LOC].	$2,631
5450-0278	Light Whelen Pioneer Plus model PFP2 12V with recess mount. Location(s): [#LOC].	$2,708
5450-0279	Floodlight Whelen PFP2AC 110V powder coated black with external mount 40" tripod telepole. Requires 110V receptacle. Location(s): [#LOC].	$3,309
5450-0280	Light Whelen Pioneer model PFP1AC 120V with internal top raise pole mount. Includes switch accessible to driver. Location: [#LOC].	$1,910
5450-0282	Light Whelen Pioneer model PCP2 12V powder coated black with external bottom raise pole mount. Includes switch accessible to driver. Location(s) [#LOC].	$2,631
5450-0283	Light Whelen Pioneer Plus model PFP2 12V powder coated black with internal top raise pole mount. Includes switch accessible to driver. Location: [#LOC].	$2,379
5450-0284	Light Whelen 150W/120V with portable base powder coated black. Requires 110V receptacle. Location(s): [#LOC].	$2,469
5450-0285	Floodlight Whelen PFP2AC 110V with external mount custom length tripod telepole. Requires 110V receptacle. Location(s): [#LOC].	$3,309
5450-0286	Light Whelen Pioneer model PCP2 12V with external bottom raise pole mount. Includes switch accessible to driver. Location(s) [#LOC].	$2,631
5450-0289	Light Whelen Pioneer model PFP1 12V with external bottom raise custom length pole. Includes switch accessible to driver. Location(s): [#LOC].	$1,830
5450-0290	Light Whelen Pioneer model PFP1 12V with internal top raise pole mount. Includes switch accessible to driver. Location: [#LOC].	$1,766
5450-0292	Light FireTech model FT-SL-15-110-W 120V with internal top raise pole mount (ROM model KR-900-I) pre-assembled from vendor. Location: [#LOC].	$2,566
5450-0294	Light Whelen Pioneer Max model PCP3 12V with Whelen external bottom raise pole mount. Includes switch accessible to driver. Location(s): [#LOC].	$3,000
5450-0297	Light Fire Research Spectra LED 110V model SPA700-K20 with portable mount. Requires 110V receptacle. Location(s): [#LOC].	$2,444
5450-0300	Light Whelen Pioneer Plus model PFP2AC 120V with recess mount. Locate [#LOC]. Includes diamond plate mounting box for recess mount.	$2,882
5450-0308	Light Whelen Slimline Pioneer Plus model PSL2 12V with Freightliner center brow mount. Includes switch in cab accessible to driver.	$1,549
5450-0312	Quartz light Fire Research Optimum 1000W/240V model OPA530-M12-SR-SW-ON with external push up pole. Location(s): [#LOC].	$1,576
5450-0313	FireTech 11" 12V double stack brow light. Includes switch in cab (driver and officer side facing lights switched separately). Location: [#LOC]	$1,347

5450-0314	FireTech 11" 12V double stack bracket mounted light. Includes switch in cab (driver and officer side facing lights switched separately). Location: [#LOC]	$1,347
5450-0315	Quartz light Fire Research Optimum 750W/110V model OPA642-S75-ON-603 with 16.625" telescopic tripod pole. Location(s): [#LOC].	$1,706
5450-0317	Quartz light Fire Research Focus 1000W/120V model FCA530-M10-CL50-SR-SW-ON with external push up pole. Location(s): [#LOC].	$1,780
5450-0319	Akron SceneStar 12V LED model ELSS-XLDC-SM2-PS-UI-TL. Includes switch accessible to driver. Location: [#LOC].	$2,360
5450-0323	Light Whelen Pioneer Plus model PFP2AC 120V powder coated black with recess mount. Location(s): [#LOC].	$2,708
5450-0324	Light Whelen Pioneer model PCP2 powder coated black with PBA203 recess mount in fabricated diamond plate boxes. Includes switch in cab (driver and officer side facing lights switched separately). Location: [#LOC].	$2,495
5450-0325	Light Whelen Pioneer model PCP2 with chrome surface mount. Includes switch in cab accessible to driver (driver and officer side facing lights switched separately). Location: [#LOC].	$2,051
5450-0327	Light Whelen Pioneer model PFP2AC 120V with internal bottom raise pole mount. Location: [#LOC].	$2,674
5450-0328	Federal Signal Commander 12V LED scene light model COMLC15K-510E-SW with internal pull-up pole. Includes switch accessible to driver. Location: [#LOC].	$2,418
5450-0330	Diamond plate mounting boxes (4). For use with scene lights and warning lights. Locate on driver side forward and rearward compartment tops outboard; boxes to be full depth of compartment top. Officer side forward and rearward upper body corners.	$903
5450-0332	Light Whelen Pioneer model PFP2AC 120V powder coated black with external bottom raise pole mount. Location(s): [#LOC].	$2,738
5450-0333	Quartz light KwikRaze 1500W/220V model KR-93D-I-NCW with internal telepole. Location(s): [#LOC].	$970
5450-0334	Akron SceneStar 120V LED model ELSS-XLAC-RM recess mount. Location: [#LOC].	$1,984
5450-0335	LED light SceneStar 220W/12V model ELSS-XLDC-BL. Includeds switch accessible to driver. Location(s): [#LOC].	$2,164
5450-0336	Quartz light Fire Research Focus 500W/120V model FCA300U-S50 with brow mount. Location: Center of cab brow.	$955
5450-0344	Light Whelen Slimline Pioneer Plus model PSL2 12V with recess mount. Includes switch in cab accessible to driver (side facing lights switched seperately). Location: [#LOC].	$1,330
5450-0345	Quartz light Fire Research Optimum 750W/110V model OPA200-S75 with recess mount with diamond plate box. Location(s): [#LOC].	$1,208
5450-0347	Quartz light Fire Research Optimum 750W/110V portable model OPA700-S75-OP703 powder coated black. Location(s): [#LOC].	$945
5450-0348	Light Whelen Slimline Pioneer Plus model PSL2 12V with pedestal mount. Includes switch in cab accessible to driver (side facing lights switched seperately). Location: [#LOC].	$1,394
5450-0349	Floodlight Whelen PFP2AC 110V powder coated black with external mount 50" tripod telepole. Requires 110V receptacle. Location(s): [#LOC].	$3,309
5450-0350	Light Whelen Pioneer model PFP1AC 120V with external bottom raise pole mount. Location(s): [#LOC].	$2,282
5450-0351	Light Whelen Pioneer model PCP2 with PBA203 recess mount in smooth plate mounting boxes painted job (2-tone if applicable) color. Includes switch in cab (driver and officer side facing lights switched separately). Location: [#LOC].	$2,536
5460-0001	Night Scan Powerlite NS3.0-4500M light tower with six 750 watt 115 volt MagnaFire quartz light heads. Control to be located next to the breaker box. Requires air brakes or air system and auxiliary air tank. Tower to be located [#LOC].	$25,163
5460-0004	Night Scan Powerlite NS4.5-6000A light tower with four 1500 watt 220 volt quartz light heads. Control to be located next to the breaker box. Requires air brakes or air system and auxiliary air tank. Tower to be located [#LOC].	$22,388
5460-0005	Night Scan Powerlite NS4.5-6000OPT light tower with four 1500 watt 230 volt Optimum quartz light heads. Control to be located next to the breaker box. Requires air brakes or air system and auxiliary air tank. Tower to be located [#LOC].	$22,086
5460-0006	Night Scan Powerlite NS4.5-9000OPT light tower with six 1500 watt 230 volt Optimum quartz light heads. Control to be located next to the breaker box. Requires air brakes or air system and auxiliary air tank. Tower to be located [#LOC].	$27,645
5460-0011	Night Scan Chief NS1.8-3000A light tower with two 1500 watt 230 volt quartz light heads. Control to be located next to the breaker box. Tower to be located [#LOC].	$13,612
5460-0020	Night Scan Powerlite NS3.0-4500 Profiler light tower with three (3) 1500 watt, 230 volt Optimum Fire Research quartz light heads. Control to be located next to the breaker box. Requires air brakes or air system and an auxiliary air tank. Location: [#LOC].	$21,496
5460-0021	Command Light light tower model CL 615. Includes (6) 1500 watt quartz halogen lights and a green strobe. Location: [#LOC].	$20,865
5460-0022	Command Light Knight tower model KL450. Includes (6) 500 watt quartz halogen lights and a green strobe. Location: [#LOC].	$14,232
5460-0024	Command Light light tower model SL429-RT. Includes (2) 1500 watt quartz halogen lights. Control to be located next to the breaker box. Location: [#LOC].	$9,178
5460-0027	Command Light tower option, back lighting.	$2,134
5460-0036	Night Scan Chief NS2.3-3000M light tower with four 750 watt 115 volt MagnaFire quartz light heads. Control to be located next to the breaker box. Tower to be located [#LOC].	$14,064
5460-0060	Night Scan Powerlite NS3.0-4000OPT light tower with four 1000 watt 230 volt Optimum quartz light heads and D-TECH II safety system. Control to be located next to the breaker box. Requires air brakes or air system and auxiliary air tank. Tower to be located [#LOC].	$29,629
5460-0067	Night Scan Chief NS2.3-600LED Whelen light tower with (4) 150 watt 12V Whelen Pioneer PFP2 LED light heads. Control to be located next to the breaker box if equipped or the forward wall of L1 if unit has no breaker box. Tower to be located [#LOC].	$17,985

5460-0069	Command Light Knight tower model KL450. Includes (6) 500 watt quartz halogen lights and a amber strobe. Location: [#LOC].	$14,232
5460-0077	Night Scan Chief NS2.3-600LED Whelen light tower with (4) 150 watt 110V Whelen Pioneer PFP2AC LED light heads. Control to be located next to the breaker box. Tower to be located [#LOC].	$26,777
5460-0100	Command Light light tower model SL422D. Includes (2) 150 watt Whelen 12V Pioneer lights. Control to be located next to the breaker box. Location: [#LOC].	$12,705
5460-0101	Command Light light tower model CL602A-2MH. Includes (4) 110V 220 watt FRC Spectra LED lights and (2) 230V 1000W metal halide lights. Location: [#LOC].	$36,114
5460-0106	Strobe light for Command Light tower. Color: [#COL].	$367
5460-0112	Night Scan NS3.0-2250M Profiler light tower with three (3) 750 watt, 115 volt MagnaFire quartz light heads. Control to be located next to the breaker box. Requires air brakes or air system and an auxiliary air tank. Location: [#LOC].	$21,496
5460-0118	Command Light light tower model SL447-RT. Includes (4) 750 watt 120V FRC Optimum quartz halogen lights. Control to be located next to the breaker box. Location: [#LOC].	$10,908
5470-0000	Receptacle twist lock 15A/110V 3 wire NEMA L5-15 with cover plate. Location: [#LOC].	$322
5470-0001	Receptacle twist lock 20A/110V 3 wire NEMA L5-20 with cover plate. Location: [#LOC].	$336
5470-0002	Receptacle twist lock 30A/110V 3 wire NEMA L5-30 with cover plate. Location: [#LOC].	$362
5470-0004	Receptacle household 20A/110V duplex 3-prong NEMA 5-20 with cover plate interior mounted wired to inlet receptacle. Location: [#LOC].	$317
5470-0005	Receptacle household 15A/110V Daniel Woodhead duplex 3 wire NEMA 5-15 w/Daniel Woodhead cover plate. Location: [#LOC]	$585
5470-0006	Receptacle twist lock 15A/110V Daniel Woodhead 3 wire NEMA L5-15 w/Daniel Woodhead cover plate. Location: [#LOC]	$526
5470-0007	Receptacle twist lock 15A/220V Daniel Woodhead 3 wire NEMA L6-15 w/Daniel Woodhead cover plate. Location: [#LOC]	$664
5470-0008	Receptacle twist lock 20A/110V Daniel Woodhead 3 wire NEMA L5-20 w/Daniel Woodhead cover plate. Location: [#LOC].	$541
5470-0009	Receptacle twist lock 20A/220V Daniel Woodhead 3 wire NEMA L6-20 w/Daniel Woodhead cover plate. Location: [#LOC]	$716
5470-0010	Receptacle twist lock 20A 110V/220V Daniel Woodhead 4 wire NEMA L14-20 w/Daniel Woodhead cover plate. Location: [#LOC]	$742
5470-0011	Receptacle twist lock 15A/220V 3 wire NEMA L6-15 with cover plate. Location: [#LOC]	$468
5470-0012	Receptacle twist lock 20A/220V 3 wire NEMA L6-20 with cover plate. Location: [#LOC].	$468
5470-0013	Receptacle twist lock 20A 110V/220V 4 wire NEMA L14-20 with cover plate. Location: [#LOC].	$637
5470-0014	Receptacle twist lock 30A/220V 3 wire NEMA L6-30 with cover plate. Location: [#LOC].	$637
5470-0015	Receptacle twist lock 30A 110V/220V 4 wire NEMA L14-30 with cover plate. Location: [#LOC]	$632
5470-0016	Receptacle shoreline 30A/110V with auto transfer switch. The receptacle shall be located [#LOC].	$1,079
5470-0017	Receptacle household 20A/110V duplex 3-prong NEMA 5-20 with cover plate. Location: [#LOC].	$306
5470-0019	Receptacle FirePower 20A/110V model FP-11 with cover plate. Location: [#LOC].	$371
5470-0020	Receptacle 12V military with A pin Positive, B pin Negative, C pin Blank. Location: [#LOC]	$254
5470-0021	12 volt power point wired battery hot. Location [#LOC]	$62
5470-0024	Receptacle 15A/110V duplex with (1) 3-prong NEMA 5-15 and (1) twist lock NEMA L5-15 with cover plate. Location: [#LOC].	$343
5470-0025	Receptacle household 30A/110V 3-prong NEMA 5-30 with cover plate. Location: [#LOC]	$350
5470-0026	Receptacle household 15A/110V duplex 3-prong NEMA 5-15 with cover plate interior mounted wired to inlet receptacle. Location: [#LOC].	$294
5470-0027	Household switch with weaterproof cover located near receptacle at [#LOC]. Switch to operate single leg of this duplex receptacle.	$529
5470-0028	Receptacle household 20A/110V Daniel Woodhead duplex 3 wire NEMA 5-20 w/Daniel Woodhead cover plate. Location: [#LOC].	$601
5470-0029	Receptacle Hubbell twist lock 20A 110V/250V 3 wire NON-NEMA with cover plate. Location: [#LOC].	$400
5470-0030	Receptacle twist lock 15A/110V 3 wire NEMA L5-15 with yellow Daniel Woodhead cover plate. Location: [#LOC].	$393
5470-0031	Receptacle twist lock 15A/110V duplex 3 wire NEMA L5-15 with yellow Daniel Woodhead cover plate. Location: [#LOC]. Top duplex will be hooked to toogle switch next to it.	$664
5470-0032	Receptacle 12V Marinco model 2018BR with model 2018MB cover wired battery hot. Includes model 2018BP male connector. Location: [#LOC].	$444
5470-0036	9 outlet Stanley model 31610 household 15A/110V power strip wired to inlet receptacle. Location: [#LOC].	$191
5470-0039	Receptacle NON-NEMA locking 20A 120V/250V Daniel Woodhead model 67W08 w/Daniel Woodhead cover plate. Location: [#LOC].	$742
5470-0040	Receptacle twist lock 50A/220V 3 wire NEMA L6-50 with cover plate. Location: [#LOC].	$775
5470-0042	Auto-Eject receptacle inlet 30 amp 120 volt with auto transfer switch. The receptacle shall be located [#LOC] and with a [#COL] cover.	$1,569
5470-0048	Service 30A/220V 4 wire with junction box. Location: [#LOC].	$493
5470-0053	Receptacle inlet 110 VAC, L5-30 Amp twist lock with a [#COL] cover. Location: [#LOC].	$295
5470-0054	Receptacle household 15A/110V duplex 3-prong NEMA 5-15 with cover plate interior mounted wired to generator (not wired to inlet/shoreline). Location: [#LOC].	$294
5470-0055	Receptacle household 15A/110V duplex 3-prong NEMA 5-15 with cover plate. This receptacle shall be GFCI protected and have a push button reset on the receptacle. Location: [#LOC].	$319
5470-0057	Receptacle household 20A/110V duplex 3-prong NEMA 5-20 with cover plate interior mounted wired to generator (not wired to inlet/shoreline). Location: [#LOC].	$306

5470-0060	Receptacles household 15A/110V duplex 3-prong NEMA 5-15 and 20A/110V twist lock receptacle NEMA L5-20 with cover plates. The receptacles shall be GFCI protected. The 5-15 receptacle shall have a push button reset on the receptacle, the L5-20 shall be GFCI protected at the breaker. Location: (1) set of (2) 5-15 and (1) L5-20 GFCI receptacles each side in cab wheel well area.	$821
5470-0061	Grainger model 2MV42; 6 outlet household 15A/110V power strip wired to inlet receptacle. Location: [#LOC].	$345
5470-0066	12 volt power point wired battery hot. Location: in rear walkin body, on forward wall, above desk, driver side.	$62
5470-0067	12 volt power point wired battery hot. Location: Inside walkin body compartment DS2, low on back wall as far forward as posable. REF customer drawing	$62
5470-0068	12 volt power point wired battery hot. Location: Inside walkin body compartment OS2, low on back wall as far forward as posable. REF customer drawing	$62
5470-0071	Receptacle household 15A/110V duplex 3-prong NEMA 5-15 with cover plate interior mounted wired to inlet receptacle and shall include as part of the receptacle 15 amp over current protection. This receptacle shall be GFCI protected and have a push button reset on the receptacle. Location: [#LOC].	$347
5470-0072	Each receptacle shall be labeled to identify the power source (Shoreline, Generator).	$127
5470-0075	Receptacle household 30A/220V 3 wire NEMA 6-30 with cover plate. Location: [#LOC].	$637
5470-0076	Receptacle Hubbell twist lock 15A/110V 3 wire NEMA L5-15 with cover plate. Location: [#LOC].	$400
5470-0077	Receptacle Hubbell twist lock 20A/250V 4 wire NEMA L15-20 with cover plate. Location: [#LOC].	$400
5470-0080	Receptacle; Schuko 250V model 70310 with weatherproof cap. Location: [#LOC].	$468
5470-0081	Receptacle household 20A/110V duplex 3-prong NEMA 5-20 with cover plate exterior mounted wired to inlet receptacle. Location: [#LOC].	$317
5470-0082	Receptacle 20A/220V 3 wire NEMA 6-20 with cover plate wired to inlet receptacle. Location: [#LOC].	$468
5500-0002	Code3 V-con #3672 siren on cab dash.	$674
5500-0003	Code3 V-con #3692 siren on cab dash.	$674
5500-0004	Code3 V-Con #3692 siren recessed mounted.	$777
5500-0005	Federal Signal electronic EQ2B-EF siren. Includes 200 watt speaker with square "E-ONE" grille. Speaker location: [#LOC].	$3,915
5500-0006	Federal electronic e-Q2B siren. Includes "Q" grille. Speaker location: [#LOC].	$4,438
5500-0007	Federal MS4000 siren recessed mounted.	$883
5500-0008	Federal PA300 siren located in cab as space permits.	$612
5500-0009	Federal PA300 electronic siren recessed mounted.	$730
5500-0010	Federal Q2B siren - flush mounted in bumper. Location: [#LOC].	$3,119
5500-0011	Federal Q2B siren - Pedestal mounted on bumper. Location: [#LOC].	$2,810
5500-0012	Prewire for Federal Q2B mechanincal siren.	$291
5500-0015	Whelen model 295SLSA1 siren with microphone (replaced 295HFSA1).	$968
5500-0016	Code 3 V-Con #3672 siren recessed mounted.	$777
5500-0017	Whelen model 295HFSM1 siren with mechanical siren tone and microphone. N/A in California.	$1,064
5500-0019	Code 3 #3997 siren. Requires (1) 200 watt or (2) 100 watt speakers.	$1,786
5500-0020	Federal PA4000 siren recessed mounted.	$779
5500-0027	Signal Vehicle Products model SS741MG siren recessed mounted.	$614
5500-0030	Code 3 #3997R siren. Requires (1) 200 watt or (2) 100 watt speakers.	$1,786
5500-0031	Whelen model 295HFSA7 siren with microphone.	$1,514
5500-0034	Federal Rumbler secondary siren. Includes amp, timer, and two speakers mounted under vehicle. Requires control switch.	$1,277
5500-0036	Whelen model 295HFSC9 siren with microphone. N/A in California.	$1,216
5500-0040	Powercall DX5200 siren control. For use with (1) 200 watt speaker or up to (2) 100W speakers.	$973
5500-0041	Federal electronic Q2B-EF siren. Includes two (2) ES100 speakers with square "E-ONE" grilles. Speaker location: [#LOC].	$4,051
5500-0044	Whelen model 295HFSA7 siren with microphone. Microphone to be removed (shipped loose) and a plug is to be installed in the wiring hole.	$1,514
5500-0045	Whelen model 295SLSC1 siren with plug-in microphone. N/A in California.	$968
5500-0049	Whelen Howler secondary siren. Includes amp, timer, and two speakers mounted under vehicle.	$1,292
5500-0053	Code3 V-Con #3692 siren on cab console.	$1,110
5500-0059	Whelen model 295SL100 siren with microphone (replaced 295HF100).	$914
5500-0060	Whelen Howler secondary siren. Includes amp, timer, and two speakers mounted under gravelshield.	$1,292
5500-0063	Federal electronic Q2B-EF siren. Includes two ES100 speakers with square "EF" grilles. Speaker location: [#LOC].	$4,051
5500-0066	Whelen model 295SLSA1 siren without microphone.	$968
5500-0067	Whelen model 295SLSC1 siren without microphone. N/A in California.	$968
5500-0068	Pre-wire for Tomar Emitter. Coil 4' of wire in driver's overhead panel.	$291
5500-0069	Prewire for Federal Q2B mechanincal siren. Officer side front bumper.	$291
5500-0070	Federal Signal electronic EQ2B-EF siren. Includes 200 watt speaker with "EF" grille. Speaker location: [#LOC].	$3,915
5500-0071	Federal Q2B siren - flush mounted in bumper. Includes diamond plate housing for siren to forward face. Freightliner cabs w/OEM bumper only. Location: driver side front bumper.	$3,310
5500-0072	Powercall X71 siren control. For use with (1) 100W speaker. Locate switch on officer side switch panel.	$616
5500-0074	Whelen model 295HFS2 siren with flush mount siren head, remote amplifier and microphone. N/A in California.	$1,114
5500-0075	Carson SA-400M siren recessed mounted.	$1,201
5500-0076	Federal Q2B siren - flush mounted in bumper. Incudes diamond plate housing for siren to space outward to clear in bumper options. Location: center front bumper.	$3,310

5500-0077	Federal Q2B siren - flush mounted in bumper. For use with commercial chassis w/OEM chrome bumper only. Location: driver side front bumper.	$3,431
5500-0078	Federal Q2B siren - flush mounted in bumper. For use with commercial chassis w/OEM chrome bumper only. Location: Officer side front bumper.	$3,431
5510-0002	Speaker Federal BP200 mounted through bumper. Location: [#LOC].	$1,221
5510-0003	Speaker Federal CP100S pedestal mounted. Location: [#LOC].	$798
5510-0007	Speaker Cast Products SA2401 100W thru bumper. Location: [#LOC].	$533
5510-0008	Speaker Cast Products SA3501 100W through bumper. Location: [#LOC].	$590
5510-0009	Federal TS100-N speaker mounted on pump panel.	$482
5510-0012	Speaker Federal TS100 through bumper with E-ONE grille. Location: [#LOC].	$566
5510-0013	Speaker Federal Dynamax MS100-EF thru bumper. Location: [#LOC].	$566
5510-0015	Speaker Federal Dynamax MS100. Located Officer's side behind Tow hook. Navistar 4400 chassis only with '07 engine.	$566
5510-0016	Code 3 PB100C electronic siren speaker recessed in front bumper. Location: [#LOC].	$555
5510-0017	Speaker Cast Products SA2403 100W thru bumper. Location: [#LOC].	$533
5510-0018	Whelen SA122FMP electronic siren speaker recessed in front bumper. Location: [#LOC].	$586
5510-0021	Speaker Federal TS100-N mounted on driver side front compartment face.	$482
5510-0022	Whelen SA314P electronic siren speaker face mounted. Location: [#LOC].	$566
5510-0023	Speaker Atkinson Dynamics (Federal) mounted on pump panel.	$649
5510-0028	Speaker Federal Dynamax ES100. Located officer's side behind tow hook. Navistar 4400 chassis only.	$566
5510-0029	Speaker, Federal Signal Dynamax ES100 with "E-ONE" grille through bumper. Location: [#LOC].	$566
5510-0034	Whelen SA315P electronic siren speaker mounted behind front bumper cut-out. Location: [#LOC].	$523
5510-0036	Federal MS100 speaker, Center bumper, E-ONE grille logo, Wildland	$450
5510-0037	Federal MS100 speakers, pair, center bumper, E-ONE grilles, Wildland	$826
5510-0041	Speaker, Federal Signal Dynamax ES100. Location: [#LOC].	$566
5510-0042	Speaker Atkinson Dynamics (Federal) model AD-SF-25 flush mounted with volume controls. Location: [#LOC].	$717
5510-0044	Whelen SA315P electronic siren speaker located behind front bumper. Location: [#LOC].	$523
5510-0045	Speaker, Federal Signal Dynamax ES100 with "E-ONE" grille. Location: [#LOC].	$566
5510-0046	Speaker Federal BP100 mounted through bumper. Location: [#LOC].	$775
5510-0047	Speakers (Pair), Federal Signal Dynamax ES100 through bumper with smooth plate grille painted same color as the heavy duty bumper and sufficient surface area for lettering. Locate both speakers next to each other center of the bumper with one common grill covering them.	$1,340
5550-0006	Whelen LED 6/2/2 lower level warning light package. Includes (6) 600 series (2) 400 series and (2) 500 series light heads w/weatherproof connectors. Locate side facing lights: [#LOC].	$3,357
5550-0007	Whelen LED 8/2 lower level warning light package. Includes (8) 600 series and (2) 500 series light heads w/weatherproof connectors. Locate side facing lights: [#LOC].	$3,616
5550-0008	Whelen strobe/LED 6/2/2 lower level warning light package. Includes (6) 600 series strobes, (2) 400 series strobes and (2) 500 series LED light heads w/weatherproof connectors and required power supplies. Locate side facing lights: [#LOC].	$3,239
5550-0010	Whelen 600 series LED lower level warning light package. Includes (10) LED light heads w/weatherproof connectors. Locate side facing lights: [#LOC].	$3,977
5550-0012	Whelen 600 series strobe lower level warning light package. Includes (10) strobe lights w/weatherproof connectors and required power supplies. Locate side facing lights: [#LOC].	$3,742
5550-0013	Federal Signal strobe/halogen lower level warning light package. Includes (8) strobe, (2) GH1F halogen lts and required power supplies. Locate side facing lights: [#LOC].	$3,158
5550-0014	Federal Signal GS5 strobe lower level warning light package. Includes (10) Lights and required power supplies. Locate side facing lights: [#LOC].	$3,604
5550-0021	Federal Signal GL5 LED lower level warning light package. Includes Ten (10) GL5-R lights. Locate side facing lights: [#LOC].	$2,884
5550-0028	Code3 strobe/halogen 6/4 lower level warning light package. Includes (6) 40 series strobe lights and (4) OL135 halogen lights and required power supplies. Locate side facing lights: [#LOC].	$4,878
5550-0029	Code3 halogen 4/6 lower level warning light package. Includes Includes (6) 41 series and (4) OL135 halogen lights. Locate side facing lights: [#LOC].	$2,451
5550-0030	Code3 model 65 red LED lower level warning light package. Includes (10) LED lights. Locate side facing lights: [#LOC].	$4,202
5550-0049	Code3 LED 6/2/2 lower level warning light package. Includes (8) model 65 red LED and (2) LXEX1F-R LED lights. Includes chrome bezels where applicable. Locate side facing lights: [#LOC].	$3,325
5550-0052	Flash rate for Federal LED lower level warning lights to be set at pattern 2, (102 TFPM).	$94
5550-0053	Flash rate for Federal LED lower level warning lights to be set at pattern 8, (150 FPM).	$94
5550-0054	Whelen 600 series Super LED lower level warning light package. Includes (10) red LED light heads w/chrome flanges. Locate side facing lights: [#LOC].	$3,157
5550-0055	Federal Signal QuadraFlare LED lower level warning light package. Includes (10) QL64XF-R LED light heads with bezels. Locate side facing lights: [#LOC].	$2,640
5550-0059	Whelen Super LED lower level warning light package. Includes (8) red 600 LED light heads and (2) red 500 LED light heads w/chrome flanges. Locate side facing lights: [#LOC].	$2,983
5550-0062	Federal Signal strobe lower level warning light package. Includes (8) GS5 strobes and (2) GS2 strobes lts. Locate side facing lights: [#LOC].	$3,604
5550-0063	Whelen Super LED lower level warning light package. Includes (8) 600 Series, (2) 400 Series and chrome flanges. For use with commercial chassis w/o ext bumper. Locate side facing lights: [#LOC].	$3,231
5550-0067	Flash rate for Federal QuadraFlare LED lower level warning lights to be set at pattern 4, (75 QFPM).	$94
5550-0069	Flash rate for Federal QuadraFlare LED lower level warning lights to be set at pattern 5, (150 DFPM).	$94

5550-0071	Whelen LED 6/4 lower level warning light package. Includes (6) 600 series and (4) 500 series light heads w/weatherproof connectors. Locate side facing lights: [#LOC].	$3,357
5550-0072	Whelen 600 series Super LED lower level warning light package. Includes (8) red/amber and (2) red LED light heads w/chrome flanges. Locate side facing lights: [#LOC].	$3,559
5550-0073	Whelen Super LED lower level warning light package. Includes (8) 600 Super LED light heads and (2) 900 Super LED light heads w/chrome flanges where applicable. Locate side facing lights: [#LOC].	$3,474
5550-0086	Whelen 900 series Super LED upper level side warning light package. Includes (2) red Whelen 900 Super LED model 90RR5FRR lights. Includes weatherproof connectors. Located (1) on the driver and (1) on the officer side upper rear side corners.	$1,164
5550-0088	Whelen 900 series Super LED upper level rear panel warning light package. Includes (2) red Whelen 900 Super LEDs lights, model 90RR5FRR. Includes weatherproof connectors. Located (1) driver and (1) officer upper rear corners.	$1,164
5550-0091	Whelen strobe/LED 6/2/2 lower level warning light package. Includes (6) 600 series strobes, (2) 700 series strobes and (2) 500 series LED light heads w/weatherproof connectors and required power supplies. Locate side facing lights: [#LOC].	$3,311
5550-0092	Whelen strobe/LED 6/2/2 lower level warning light package. Includes (6) 600 series super LED, (2) 700 series split lens strobes and (2) 500 series super LED light heads w/weatherproof connectors and required power supplies. Locate side facing lights: [#LOC]	$3,776
5550-0093	Whelen Super LED lower level warning light package. Includes (6) 600 LED red light heads, (2) 400 LED red light heads and (2) 500 red LED light heads w/chrome flanges. Locate side facing lights: [#LOC]	$2,846
5550-0094	Federal Signal strobe lower level warning light package. Includes (8) GS5 strobes and (2) GS2 strobes lts. All lenses to be blue except mid-body which are red. Locate side facing lights: [#LOC]	$3,604
5550-0095	Whelen Super LED lower level warning light package. Includes (7) 600 red LED light heads, and (3) 600 blue LED light head w/chrome flanges. Locate side facing lights: [#LOC]	$3,157
5550-0096	Weldon Diamondback V46 LED lower level warning light package. Includes (10) red LED light heads w/chrome flanges. Locate side facing lights: [#LOC].	$3,206
5550-0097	Whelen 400 series linear Super LED lower level warning light package. Includes (10) red LED light heads w/chrome flanges. Locate side facing lights: [#LOC].	$4,828
5550-0099	Whelen Super LED lower level warning light package. Includes (4) red 600 LED light heads, (4) red/clear 600 split LED light heads and (2) red 500 LED light heads w/chrome flanges. Locate side facing lights: [#LOC].	$3,965
5550-0100	Whelen Super LED lower level warning light package. Includes (6) red 600 LED light heads and (4) red 500 LED light heads w/chrome flanges. Locate side facing lights: [#LOC].	$2,983
5550-0101	Whelen Super LED lower level warning light package. Includes (6) 600 red LED light heads, (2) 900 red LED light heads and (2) 500 red LED light heads w/chrome flanges. Locate side facing lights: [#LOC].	$3,135
5550-0102	Whelen Super LED lower level warning light package. Includes (6) 600 LED light heads, (2) 900 LED light heads and (2) 500 LED light heads w/chrome flanges. Locate side facing lights: [#LOC].	$3,135
5550-0103	Whelen Super LED lower level warning light package. Includes (8) 600 Super LED light heads and (4) 500 Super LED light heads w/chrome flanges where applicable. Locate side facing lights: [#LOC].	$4,114
5550-0104	Whelen 600 series Super LED lower level warning light package. Includes (8) red and (2) red/white LED light heads w/chrome flanges. Locate side facing lights: [#LOC].	$3,683
5550-0106	Whelen Super LED lower level warning light package. Includes (6) 600 red LED light heads, (2) 400 amber LED light heads and (2) 500 red LED light heads w/chrome flanges. Locate side facing lights: [#LOC].	$2,846
5550-0107	Whelen Super LED lower level warning light package. Includes (8) red 600 LED light heads and (2) red 500 LED light heads w/chrome flanges. Locate side facing lights: [#LOC].	$2,983
5550-0109	Federal Signal QuadraFlare LED lower level warning light package. Includes (5) QL64XF-R LED light heads with bezels and (5) QL64XF-B LED light heads with bezels. Lights to alternate red/blue around unit; see specificaton. Locate side facing lights: [#LOC].	$2,640
5550-0110	Whelen Super LED lower level warning light package. Includes (4) red 600 LED light heads, (4) blue 600 LED light heads, (1) red 500 LED light head and (1) blue 500 LED light head. LIghts to alternate red/blue around unit; see specification. Locate side facing lights: [#LOC].	$2,983
5550-0113	Federal Signal QuadraFlare LED upper level rear warning light package. Includes (2) QL97XF red LED light heads with bezels. Located (1) Driver and (1) Officer upper rear corners.	$919
5550-0114	Weldon Diamondback V46 LED lower level warning light package. Includes (10) red LED light heads w/clear lenses and chrome flanges. Locate side facing lights: [#LOC].	$3,206
5550-0117	Whelen Super LED lower level warning light package. Includes (6) 600 Super LED light heads (2 red forward/2 red rearward/2 amber rearward) and (6) side facing 500 Super LED red light heads w/chrome flanges where applicable. Requires additional side facing lights midship to meet blocking mode. Locate side facing lights: [#LOC].	$4,069
5550-0123	Whelen M6 Super LED lower level warning light package. Includes (8) red M6R LED light heads and (2) red 500 Super LED light heads w/chrome flanges. Locate side facing lights: [#LOC].	$3,323
5550-0125	Whelen M6RC Super LED lower level warning light package. Includes (8) red M6RC LED light heads and (2) red 500 Super LED light heads w/chrome flanges and clear lenses. Locate side facing lights: [#LOC].	$3,323
5550-0127	Federal Signal QuadraFlare LED lower level warning light package. Includes (10) QL64XFC-R LED light heads with clear lenses and bezels. Locate side facing lights: [#LOC].	$2,640
5550-0128	Whelen Super LED lower level warning light package. Includes (6) red 600 LED light heads, (2) red LIN3 lights and (2) red 500 LED light heads w/chrome flanges. Locate side facing lights: [#LOC].	$2,983
5550-0129	Whelen 600 series Super LED lower level warning light package. Includes (5) red LED light heads w/chrome flanges and (5) blue LED light heads w/chrome flanges. LIghts to alternate red/blue around unit; see specification. Locate side facing lights: [#LOC].	$3,157

5550-0130	Weldon Diamondback V46W-C/V26W-C LED lower level warning light package. Includes (8) red V46 LED light heads w/clear lenses and (2) red V26 LED light heads w/clear lenses. Locate side facing lights: [#LOC].	$3,097
5550-0131	Whelen Super LED lower level warning light package. Includes (8) 600 LED light heads (7 red,1 blue rear facing officer side) and (2) red 500 LED light heads w/chrome flanges. Locate side facing lights: [#LOC].	$2,983
5550-0132	Whelen Super LED lower level warning light package. Includes (8) red 600 LED light heads and (2) red TIR3 LED light heads grommet mounted. Locate side facing lights: [#LOC].	$2,841
5550-0135	Whelen Super LED lower level warning light package with clear lenses. Includes (6) red 600 LED light heads, (2) red/clear 600 split LED light heads (side facing forward position) and (2) red 500 LED light heads w/chrome flanges. Locate side facing lights: [#LOC].	$3,665
5550-0148	Whelen M6 Super LED lower level warning light package. Includes (6) red M6RC LED light heads with clear lenses and chrome flanges, (4) split red/clear M6D light heads with clear lenses and chrome flanges. See specifications for locations of split lights. Locate side facing lights: [#LOC].	$3,795
5550-0149	Whelen M6 Super LED lower level warning light package. Includes (10) red M6R LED light heads w/chrome flanges. Locate side facing lights: [#LOC].	$3,743
5550-0152	Federal Signal QuadraFlare LED lower level warning light package. Includes (8) QL64XF-R red LED light heads with bezels and (2) forward facing QL64SFC-RC split red/clear LED light heads with bezels. Locate side facing lights: [#LOC].	$2,739
5550-0154	Whelen M6 Super LED lower level warning light package. Includes (1) red M6RC LED light head with clear lens and chrome flange, (1) blue M6BC with clear lens and chrome flange and (8) split red/clear M6D light heads with clear lenses and chrome flanges. Locate side facing lights: [#LOC].	$4,063
5550-0155	Whelen Super LED lower level warning light package with clear lenses. Includes (8) 600 LED light heads (6 red,2 blue; (1) forward and (1) rearward facing officer side) and (2) red 500 LED light heads w/chrome flanges. Locate side facing lights: [#LOC].	$2,983
5550-0159	Whelen M6 Super LED lower level warning light package. Includes (6) M6RC red LED light heads with clear lenses, (2) M9RC red LED light heads with clear lenses and (2) red 500 Super LED light heads w/chrome flanges and clear lenses. Locate side facing lights: [#LOC].	$4,270
5550-0164	Whelen 600 series Super LED lower level warning light package. Includes (10) red LED light heads w/clear lenses and chrome flanges. Locate side facing lights: [#LOC].	$3,157
5550-0165	Code 3, LED warning light package, base, Wildland	$7,459
5550-0166	Whelen LED warning light package, option. Wildland	$6,182
5550-0167	Federal LED warning light package, option, Wildland	$5,182
5550-0169	Federal Signal QuadraFlare LED lower level warning light package. Includes (10) QL64XF-B blue LED light heads with bezels. Locate side facing lights: [#LOC].	$2,640
5550-0170	Whelen Super LED lower level warning light package. Includes (8) 600 Series (4) red & (4) blue, (2) 400 Series (1) red & (1) blue and chrome flanges alternating in colors. Locate side facing lights: at forward most position, in rear wheelwell offset to front, and on tailboard mounted light box above rear tailboard. Lights will alternate color from light to light. All lights will have clear lenses with colored LEDs.	$3,157
5550-0171	Whelen Super LED lower level warning light package. Includes (4) red 600 LED light heads, (4) blue 600 LED light heads, (1) red 500 LED light head and (1) blue 500 LED light head. Lights to be driver side red, officer side blue; see specification. Locate side facing lights: [#LOC].	$2,983
5550-0173	Whelen M6 Super LED lower level warning light package. Includes (8) red M6R LED light heads and (2) red M2R LED light heads. Locate side facing lights: [#LOC].	$3,323
5550-0177	Federal Signal Impaxx/Quadraflare LED lower level warning light package. Includes (4) Impaxx LED light heads with bezels and (4) QL64XF-R LED light heads with bezels. Location: (1) Impaxx each side forward facing, (1) Impaxx each side forward side facing, (1) Quadraflare each side in rear wheel well offset rearward and (1) Quadraflare each side facing rearward.	$1,982
5550-0178	Whelen Super LED lower level warning light package with clear lens. Includes (8) red 600 LED light heads and (2) red 500 LED light heads w/chrome flanges. Locate side facing lights: [#LOC].	$2,983
5550-0180	Whelen M6 Super LED lower level warning light package. Includes (10) red M6 LED light heads w/clear lenses and chrome flanges. Locate side facing lights: [#LOC].	$3,743
5550-0181	Whelen Super LED lower level warning light package with clear lenses. Includes (8) red/clear M6 split LED light heads and (2) split red/clear M2 LED light heads w/chrome flanges. State of Maryland only. Locate side facing lights: [#LOC].	$4,099
5550-0183	Whelen M6 Super LED lower level warning light package. Includes (8) red M6R LED light heads and (2) red TIR3 LED light heads. Locate side facing lights: [#LOC].	$3,323
5550-0188	Whelen M6 Super LED lower level warning light package. Includes (6) red M6R and (4) blue M6B LED light heads w/chrome flanges. See specifications for color locations. Locate side facing lights: [#LOC].	$3,743
5550-0189	Whelen Super LED lower level warning light package. Includes (7) red 600 LED light heads, (1) blue 600 LED light heads and (2) red 500 LED light heads. Locate side facing lights: [#LOC].	$2,983
5550-0190	Federal Signal QuadraFlare LED lower level warning light package. Includes (5) QL64XF-R LED light heads with bezels and (5) QL64XF-B LED light heads with bezels. Lights to alternate red/blue around unit; see specificaton. Locate side facing lights: [#LOC].	$2,640
5550-0191	Weldon Diamondback V46/V79 LED lower level warning light package. Includes (8) red V46 LED light heads w/clear lenses and (2) red V79 LED light heads w/clear lenses. Locate side facing lights: [#LOC].	$3,763
5550-0192	Federal Signal QuadraFlare LED lower level warning light package. Includes (8) QL64XF-R LED light heads with bezels and (2) IMPAXX LED model IPX302-4 light heads. Locate side facing lights: [#LOC].	$2,366
5550-0193	Federal Signal QuadraFlare LED lower level warning light package. Includes (6) QL64XF-R LED light heads with bezels and (4) IMPAXX LED model IPX302-4 light heads. Locate side facing lights: [#LOC].	$2,196

5550-0194	Federal Signal QuadraFlare LED lower level warning light package. Includes (4) QL64XF-R LED light heads, (4) QL64XF-B LED light heads, (1) IMPAXX LED model IPX302-3 light head and (1) IMPAXX LED model IPX302-4 light head. Lights to alternate red/blue around unit; see specification. Locate side facing lights: [#LOC].	$2,409
5550-0197	Weldon Diamondback LED lower level warning light package. Includes (4) red V46 LED light heads w/clear lenses, (4) red V79 LED light heads w/clear lenses and (2) red V26 LED light heads w/clear lenses. Locate side facing lights: [#LOC].	$4,212
5550-0210	Federal Signal QuadraFlare LED lower level warning light package. Includes (8) Quadraflare light heads, (7) QL64XF-R (red) LED lights and (1) QL64XF-B (blue) LED light with bezels and (2) IMPAXX LED model IPX302-4 light heads. Locate side facing lights: [#LOC].	$2,366
5550-0211	Whelen Super LED lower level warning light package with clear lenses. Includes (8) 600 LED light heads (4 red driver's side, 4 blue officer's side) and (2) 500 LED light heads (1 red driver's side, 1 blue officer's side)w/chrome flanges. Locate side facing lights: [#LOC].	$2,983
5550-0212	Whelen 900 series Super LED upper level rear panel warning light package. Includes (2) Whelen 900 Super LED lights with clear lens. (1) red model 90RRF5CR driver's side and (1) blue model 90BBF5CR officer's side. Includes weatherproof connectors. Located upper rear corners.	$1,164
5550-0213	Whelen Super LED lower level warning light package. Includes (6) red 600 LED light heads, (2) red LIN3 lights and (2) red 500 LED light heads w/chrome flanges and clear lenses. Locate side facing lights: [#LOC].	$2,983
5550-0214	Whelen Super LED lower level warning light package with clear lens. Includes (7) red 600 LED light heads, (1) blue 600 LED light heads and (2) red 500 LED light heads. Locate side facing lights: [#LOC].	$2,983
5550-0215	Whelen 900 series Super LED upper level side warning light package with clear lens. Includes (2) red Whelen 900 Super LED lights. Includes weatherproof connectors. Located (1) on the driver and (1) on the officer side upper rear body panels.	$1,164
5550-0216	Whelen 900 series Super LED upper level rear panel warning light package with clear lens. Includes (1) red, (1) blue Whelen 900 Super LEDs lights. Includes weatherproof connectors. Located (1) red on driver and (1) blue on officer upper rear corners.	$1,164
5550-0217	Federal Signal QuadraFlare LED lower level warning light package. Includes (2) QL64XF-R LED light heads with bezels (chrome) and (6) IMPAXX LED model IPX302-4 light heads with bezels (chrome). Locate side facing lights: [#LOC].	$2,045
5550-0220	Federal Signal QuadraFlare LED lower level warning light package. Includes (6) QL64XF-R LED light heads with bezels and (4) IMPAXX LED model IPX602-R light heads. Locate side facing lights: [#LOC].	$2,639
5550-0223	Whelen 900 series Super LED upper level side warning light package. Includes (2) red Whelen 900 Super LED model 90RRF5RR lights. Includes weatherproof connectors. Located (1) on the driver and (1) on the officer side upper forward side corners.	$1,164
5550-0225	Whelen M6 Super LED lower level warning light package. Includes (8) red M6RC LED light heads with clear lens and (2) red M2RC LED light heads with clear lens. Locate side facing lights: [#LOC].	$3,323
5550-0227	Whelen M6/M7/600/IONWR Super LED lower level warning light package. Includes (2) red M6R LED light heads, (4) split red/clear M7D light heads, (2) 600 Series Super LED light heads, Red with clear lenses and (2) red IONWR LED light heads. See specification for location of split lights. Locate side facing lights: [#LOC].	$3,918
5550-0229	Federal Signal QuadraFlare LED lower level warning light package. Includes (4) QL64XF-R LED light heads with bezels and (6) IMPAXX LED model IPX302-4 light heads. Locate side facing lights: [#LOC].	$2,196
5550-0233	Whelen Super LED lower level warning light package. Includes (6) red 600 LED light heads, (2) red LIN3 lights and (2) red 500 LED light heads w/chrome flanges. Locate side facing lights: [#LOC].	$2,983
5550-0234	Whelen M6RC Super LED lower level warning light package. Includes (8) red M6RC LED light heads and (2) red 500 Super LED light heads w/chrome flanges and clear lenses. Locate side facing lights: [#LOC].	$3,323
5550-0236	Whelen M6 Super LED lower level warning light package. Includes (6) red M6R LED light heads, (2) blue M6B LED light heads (1 officer front and 1 officer rear facing) and (2) red M2R LED light heads. Locate side facing lights: [#LOC].	$3,323
5550-0238	Federal Signal QuadraFlare LED lower level warning light package. Includes (3) QL64XF-R LED light heads, (3) QL64XF-B LED light heads, (2) IMPAXX LED model IPX302-3 light head and (2) IMPAXX LED model IPX302-4 light head. Lights to alternate red/blue around unit; see specification. Locate side facing lights: [#LOC].	$2,409
5550-0240	Whelen Super LED lower level warning light package. Includes (8) red 600 LED light heads and (2) red 500 LED light heads w/chrome flanges. Locate side facing lights: [#LOC].	$2,983
5550-0241	Whelen M6 Super LED lower level warning light package. Includes (6) M6R red LED light heads, (2) M9R red LED light heads and (2) red M2R red Super LED light heads. Locate side facing lights: [#LOC].	$4,270
5550-0242	Whelen Super LED lower level warning light package. Includes (8) 600 LED light heads (6) Red/Blue (2) Red /White with clear lenses and (2) red 500 LED light heads with clear lenses and chrome flanges. Locate side facing lights: [#LOC].	$3,372
5550-0245	Whelen Super LED lower level warning light package. Includes (4) red 600 LED light heads, (4) blue 600 LED light heads, (1) red 500 LED light head and (1) blue 500 LED light head all with clear lenses. Lights to be driver side blue, officer side red; see specification. Locate side facing lights: [#LOC].	$2,983
5550-0248	Federal Signal QuadraFlare LED lower level warning light package with clear lenses. Includes (8) QL64XFC-R LED light heads with bezels and (2) IMPAXX LED model IPX300-4 light heads. Locate side facing lights: [#LOC].	$2,366
5550-0249	Whelen M6 Super LED lower level warning light package. Includes (5) red M6R LED light heads, (2) M6J split red/blue LED light heads, (1) blue M6B LED light head (officer front) and (2) red M2R LED light heads. Locate side facing lights: [#LOC].	$3,764

5550-0250	Whelen Super LED lower level warning light package. Includes (4) red 600 LED light heads, (4) red LIN3 lights and (2) red 500 LED light heads w/chrome flanges. Locate side facing lights: [#LOC].	$2,569
5550-0251	Whelen 600 series Super LED lower level warning light package. Includes (10) LED light heads w/chrome flanges. (5) Red, (5) blue alternating. Locate side facing lights: [#LOC].	$3,157
5550-0252	Whelen 600 series Super LED lower level warning light package. Includes (8) red LED light heads with clear lenses and (2) split red/blue LED light heads with clear lenses. Locate side facing lights: [#LOC].	$3,212
5550-0254	Whelen M6 Super LED lower level warning light package. Includes (4) red M6RC LED light heads with clear lenses and chrome flanges, (4) split red/clear M6D light heads with clear lenses and chrome flanges and (2) red M2RC LED light heads. See specifications for locations of split lights. Locate side facing lights: [#LOC].	$3,767
5550-0255	Whelen 900 series Super LED upper level rear panel warning light package with clear lens. Includes (2) red Whelen 900 Super LEDs lights, model 90RR5FCR. Includes weatherproof connectors. Located (1) driver and (1) officer upper rear corners.	$1,164
5550-0256	Federal Signal QuadraFlare LED upper level rear warning light package. Includes (2) QL97XF (1) blue and (1) red LED light heads with bezels. Located (1) blue on the driver and (1) red on the officer side of upper rear corners.	$919
5550-0257	Whelen M6 Super LED lower level warning light package. Includes (10) red/blue M6J LED light heads w/chrome flanges and clear lenses. Locate side facing lights: [#LOC].	$3,696
5550-0258	Whelen M6 Super LED lower level warning light package. Includes (4) red M6R LED light heads, (4) blue M6B LED light heads, (1) red M2R LED light head and (1) blue M2B LED light head. Driver side red, officer side blue. Locate side facing lights: [#LOC].	$3,323
5550-0260	Federal Signal QuadraFlare LED lower level warning light package. Includes (4) QL64XF-R LED light heads, (4) QL64XF-B LED light heads, (1) IMPAXX LED model IPX302-3 light head and (1) IMPAXX LED model IPX302-4 light head. Lights to alternate red/blue around unit; see specification. Locate side facing lights: [#LOC].	$2,409
5550-0261	Whelen M6 Super LED lower level warning light package. Includes (10) M6RC red LED with clear lens light heads w/chrome flanges. Locate side facing lights: [#LOC].	$3,743
5550-0262	Whelen M6 Super LED lower level warning light package. Includes (10) blue M6B LED light heads w/chrome flanges. Locate side facing lights: [#LOC].	$3,743
5550-0264	Power Arc LED 4/2/2/2 red/white/blue/yellow lower level warning light package. Includes (4) P14SM, (2) M90DHL (1-WR, 1-BW), (2)M90FK and (2) LED210. See specifications for exact locations and colors. Locate side facing lights: [#LOC].	$5,978
5550-0265	Whelen M6 Super LED lower level warning light package. Includes (4) red M6R LED light heads, (4) blue M6B LED light heads, (1) red M2R LED light head and (1) blue M2B LED light head. Alternate red/blue around unit. Locate side facing lights: [#LOC].	$3,323
5550-0266	Federal Signal QuadraFlare LED lower level warning light package. Includes (6) QL64XF-R LED light heads with bezels, (2) QL64SFC-WR and (2) IMPAXX LED model IPX302-4 light heads. Locate side facing lights: [#LOC].	$3,026
5550-0267	Whelen Super LED lower level warning light package. Includes (8) red 600 LED light heads and (2) red 500 LED light heads w/chrome flanges. Locate side facing lights: [#LOC].	$2,983
5550-0268	Whelen Super LED lower level warning light package. Includes (6) red 600 LED light heads and (4) red TIR3 LED light heads surface and grommet mounted. Locate side facing lights: [#LOC].	$2,841
5550-0269	Federal Signal QuadraFlare LED lower level warning light package. Includes (5) QL64XF-R LED light heads with bezels, (3) QL64XF-B LED light heads with bezels and (2) QL64XF-A LED light heads with bezels. Lights to located as per specificaton. Locate side facing lights: [#LOC].	$2,640
5550-0274	Federal Signal QuadraFlare LED lower level warning light package. Includes (7) QL64XF-R LED light heads, (1) QL64XF-G light head and (2) IMPAXX LED model IPX302-4 light heads. Locate side facing lights: [#LOC].	$2,646
5550-0275	Whelen M6 Super LED lower level warning light package. Includes (6) red M6R LED light heads and (4) red M2R LED light heads. Locate side facing lights: [#LOC].	$3,165
5550-0276	Code3 LED 6/2/2 lower level warning light package. Includes (8) model 65 red LED and (2) LXEX1F red LED lights all with clear lenses. Includes chrome bezels where applicable. Locate side facing lights: [#LOC].	$3,325
5550-0277	Federal Signal QuadraFlare LED lower level warning light package with clear lenses. Includes (8) QL64XFC-R red LED light heads with bezels and (2) IMPAXX LED model IPX600-B blue light heads. Locate side facing lights: [#LOC].	$2,431
5550-0278	Federal Signal QuadraFlare LED lower level warning light package. Includes (7) QL64XF-R LED, (1) QL64XF-B LED light head with bezel (driver rear facing), and (2) IMPAXX LED model IPX302-4 light heads. Locate side facing lights: at forward most position, centered in rear wheel well, and side facing at rear of body in rubrail if equipped.	$2,366
5550-0279	Federal Signal QuadraFlare LED lower level warning light package. Includes (6) QL64XF-R LED light heads with bezels and (4) IMPAXX LED model IPX302-4 light heads. Locate side facing lights: [#LOC].	$2,196
5550-0280	Federal Signal QuadraFlare LED lower level warning light package. Includes (8) QL64XF-B LED light heads with bezels and (2) IMPAXX LED model IPX302-3 light heads. Locate side facing lights: [#LOC].	$2,366
5550-0281	Whelen M6 Super LED lower level warning light package. Includes (6) red M6R LED light heads, (2) red 600 LED light heads and (2) red TIR3 LED light heads. Locate side facing lights: [#LOC].	$3,174
5550-0282	Whelen M6 Super LED lower level warning light package. Includes (8) red M6R and (2) blue M6B LED light heads w/chrome flanges. See specifications for color locations. Locate side facing lights: [#LOC].	$3,743
5550-0283	Code3 LED 8/2 red/blue lower level warning light package. Includes (8) model 65 LED and (2) LXEX1F LED lights. See specification for exact locations. Includes chrome bezels where applicable. Locate side facing lights: [#LOC].	$3,325
5550-0285	Whelen M6 Super LED lower level warning light package. Includes (7) red M6R LED light heads, (1) green M6G and (2) red M2R LED light heads. Locate side facing lights: [#LOC].	$3,375

5550-0286	Federal Signal QuadraFlare LED lower level warning light package with clear lenses. Includes (6) QL64SFC-RR LED light heads with bezels, (2) QL64SFC-WR and (2) IMPAXX LED model IPX300-4 light heads. See specification for exact locations. Locate side facing lights: [#LOC].	$3,137
5550-0287	Whelen Super LED lower level warning light package. Includes (6) red M6R LED light heads, (2) red 600 LED light heads and (2) red M2R LED light heads. Locate side facing lights: [#LOC].	$3,323
5550-0288	Whelen Super LED lower level warning light package. Includes (6) 600 LED light heads; (3) red/(3) blue, (2) 900 LED light heads; (1) red/(1) blue and (2) 500 LED light heads; (1) red/(1) blue w/chrome flanges. See specifications for exact locations of lights. Locate side facing lights: [#LOC].	$3,135
5550-0289	Whelen M6/M7/M2/M9 Super LED lower level warning light package with clear lenses. Includes (2) red M6RC LED light heads, (4) red M7RC light heads, (2) red M2RC LED light heads and (2) red M9RC LED light heads. See specification for exact locations lights. Locate side facing lights: [#LOC].	$3,885
5550-0290	Whelen M6 Super LED lower level warning light package. Includes (6) red M6RC LED light heads, (2) split red/amber M6K light heads and (2) red M2RC LED light heads. Locate side facing lights: [#LOC].	$3,669
5550-0291	Whelen Super LED lower level warning light package. Includes (6) red M6RC LED light heads with clear lenses, (2) red 600 LED light heads with clear lenses and (2) red M2RC LED light heads with clear lenses. Locate side facing lights: [#LOC].	$3,323
5550-0292	Whelen M6 Super LED lower level warning light package. Includes (8) red M6RC LED light heads with clear lens and (2) red TIR3 LED light heads. Locate side facing lights: [#LOC].	$3,240
5550-0293	Whelen Super LED lower level warning light package with clear lenses. Includes (8) red 600 LED light heads and (2) red TIR3 LED light heads grommet mounted. Locate side facing lights: [#LOC].	$2,841
5550-0295	Whelen M6 Super LED lower level warning light package. Includes (6) red M6RC LED light heads, (2) red 6RBRC Rota-Beam LED and (2) red M2RC LED light heads with clear lenses. Locate side facing lights: [#LOC].	$3,929
5550-0298	Whelen M6 Super LED lower level warning light package. Includes (6) M6RC red LED light heads, (2) M9 (1 red, 1 blue) LED light heads w/clear lenses and (2) red M2RC red Super LED light heads. Locate side facing lights: [#LOC].	$4,270
5550-0299	Whelen M6 Super LED lower level warning light package. Includes (7) red M6R and (3) blue M6B LED light heads w/chrome flanges. See specifications for color locations. Locate side facing lights: [#LOC].	$3,743
5550-0304	Whelen M6 Super LED lower level warning light package. Includes (8) red M6R LED light heads and (2) red PSR00FRR Super LED light heads w/chrome flanges. Locate side facing lights: [#LOC].	$3,323
5550-0305	Federal Signal QuadraFlare LED lower level warning light package. Includes (6) QL64XF-R LED light heads with bezels, (2) QL64SFC-WR and (2) IMPAXX LED model IPX302-4 light heads. Locate side facing lights: [#LOC].	$3,026
5550-0306	Whelen Super LED lower level warning light package. Includes (8) red 600 LED light heads and (2) red 500 LED light heads w/black flanges. Locate side facing lights: [#LOC].	$2,983
5550-0307	Whelen M6 Super LED lower level warning light package. Includes (8) red M6RC LED light heads with clear lens and (and (2) red TIR3 LED light heads grommet mounted with clear lenses. Locate side facing lights: [#LOC].	$3,323
5550-0308	Federal Signal QuadraFlare LED lower level warning light package. Includes (2) QL64SFC-RC LED split lens light heads with bezels (4) QL64XF-R LED light heads with bezels and (4) IMPAXX LED model IPX302-4 light heads. Locate side facing lights: at forward most position, centered in rear wheel well, and side facing at rear of body in rubrail if equipped.	$2,279
5550-0309	Whelen Super LED lower level warning light package. Includes (6) 600 LED light heads, (4 red, 2 blue) and (4) red 500 LED light heads w/chrome flanges. Locate side facing lights: [#LOC].	$2,983
5550-0310	Whelen M6 Super LED lower level warning light package. Includes (6) M6RC red LED light heads, (2) M9RC red LED light heads and (2) red M2RC red Super LED light heads. Locate side facing lights: [#LOC].	$4,270
5550-0311	Whelen M6 Super LED lower level warning light package with clear lenses. Includes (7) red M6RC LED light heads, (1) blue M6BC light head and (2) blue M2BC LED light heads. Locate side facing lights: [#LOC].	$3,323
5550-0312	Whelen M6 Super LED lower level warning light package. Includes (4) M6RC red LED light heads, (2) M9RC red LED light heads and (4) red M2RC red Super LED light heads. Locate side facing lights: [#LOC].	$4,206
5550-0313	Whelen Super LED lower level warning light package with clear lenses. Includes (8) 600 LED light heads (1 red, 7 blue) and (2) blue 500 LED light heads w/chrome flanges. Locate side facing lights: [#LOC].	$2,983
5550-0314	Whelen Super LED lower level warning light package with clear lens. Includes (5) red 600 LED light heads, (3) blue 600 LED light heads and (2) red 500 LED light heads. Locate side facing lights: [#LOC].	$2,983
5550-0315	Power Arc LED 4/4/2 lower level warning light package. Includes 210LED-1B frt dr side, 210LED-2R frt off side, 210LED-2R rr dr side, 210LED-1B rr off side and (4) P14SM; (2) red, (2) blue. Locate side facing lights: [#LOC].	$4,462
5550-0316	Whelen M6 Super LED lower level warning light package. Includes (8) red M6RC LED light heads with clear lens and (2) red PSR00FRR LED light heads. Locate side facing lights: [#LOC].	$3,323
5550-0317	Whelen M6 Super LED lower level warning light package with clear lenses. Includes (4) M6V2 (2 red, 2 blue) LED light heads (4) M6 (2 red, 2 blue) LED light heads and (2) TIR3 (1 red, 1 blue) LED light heads. See specifications for exact locations. Locate side facing lights: [#LOC].	$4,968
5550-0318	Whelen Super LED lower level warning light package. Includes (6) red 600 LED light heads, (2) red M6V2R LED light heads and (2) red 500 LED light heads w/chrome flanges. Locate side facing lights: [#LOC].	$3,942

5550-0319	Whelen Super LED lower level warning light package with clear lenses. Includes (4) 600 LED light heads (2-red, 2-blue), (4) 600 split LED light heads (2-red/clear, 2-red/blue) and (2) 500 split red/blue TIR6 LED light heads w/chrome flanges. Locate side facing lights: [#LOC].	$4,007
5550-0320	Whelen Super LED lower level warning light package. Includes (6) red 600 LED light heads. (2) blue 600 LED light heads and (2) red 500 LED light heads w/chrome flanges. Locate side facing lights: [#LOC].	$2,983
5550-0321	Federal Signal QuadraFlare LED lower level warning light package. Includes (6) QL64XF-R LED light heads, (2) QL64XF-B LED (rear facing) light heads and (2) IMPAXX LED model IPX302-4 light heads. Locate side facing lights: [#LOC].	$2,366
5600-0002	Warning light Whelen 600 series strobe (PR) [#COL]. Requires power pack or option with spare power pack outlets. Includes weatherproof connectors. Requires engineering approval for NFPA applications. Location(s): [#LOC]	$470
5600-0011	Whelen power supply model UPS64LX 4Place 75Watt strobe.	$606
5600-0012	Whelen power supply model ISP148 eight (8) place 140watt strobe.	$1,421
5600-0013	Whelen power supply model ISP188 eight (8) place 180watt strobe.	$1,520
5600-0017	Warning light Whelen 500 series LED (PR) red. Surface mounted with weatherproof connector. Location: [#LOC]	$461
5600-0020	Warning light Whelen 600 series LED (PR) amber. Location: [#LOC] Surface mounted with weatherproof connector. Requires engineering approval for NFPA applications.	$821
5600-0021	Warning light Whelen 600 series LED (PR) red. Surface mounted with weatherproof connector. Location: [#LOC]	$821
5600-0024	Warning light Whelen 900 series LED (PR) red. Surface mounted with weatherproof connector. Location: [#LOC]	$1,485
5600-0025	Warning light Whelen 600 series halogen (PR) [#COL]. Includes weatherproof connectors. Requires engineering approval for NFPA applications. Location(s): [#LOC]	$380
5600-0029	Code3 Model 550 rotating (PR) with [#COL] domes. Location: [#LOC].	$406
5600-0030	Code3 Model #550/#41. Includes (2) #550's with red domes and (2) #41 lights with [#COL] lenses. Total four (4) lights at rear upper. Location of Model 550 lights: [#LOC].	$1,046
5600-0033	Whelen beacon with halogen rotator and 700 series strobe (PR) Model B6R with red domes and [#COL] strobes. Location [#LOC]. Requires power pack.	$899
5600-0034	Federal model SY12FS Sentry (PR) with [#COL] domes. Location: [#LOC].	$407
5600-0036	Federal model IVP100 Vector pod (PR) with [#COL] domes. Location: [#LOC].	$485
5600-0038	Federal Model IVP200F Vector pod warning light (PR) with [#COL] filters. Location: [#LOC].	$528
5600-0040	Whelen beacon Model RB6PAP (PR) with amber lenses. Located one (1) each side at rear. Location: [#LOC]	$496
5600-0041	Warning light Federal Signal GS2 strobe (PR) [#COL]. Requires power pack or option w/spare power pack outlets. Requires engineering approval for NFPA applications. Location(s): [#LOC].	$453
5600-0046	Warning light Federal Signal GH1F halogen (PR) [#COL]. Location(s): [#LOC]	$340
5600-0048	Warning light Federal Signal GL5 LED (PR) red. Location: [#LOC]	$671
5600-0049	Warning light Federal Signal GS5 strobe (PR) [#COL]. Requires power pack or option w/spare power pack outlets. Requires engineering approval for NFPA applications. Location(s): [#LOC]	$414
5600-0051	Warning light Federal Signal GL5 LED (PR) amber. Location: [#LOC].	$693
5600-0052	Federal Signal SPS4-NFPA (4) place 90 watt strobe power supply. Required when using Federal Signal strobes.	$601
5600-0053	Federal Signal SPS8-NFPA (8) place 192 watt strobe power supply. Required when using Federal Signal strobes.	$1,070
5600-0061	Mars 888 pedestal mounted traffic clearing light on front of cab above grille.	$995
5600-0067	Federal Signal Model #100 beacon (PR) with [#COL] domes. Location: [#LOC].	$519
5600-0074	Opticom Emitter 3M #792H. Emitter and control only. Wire through parking brake. Location: [#LOC].	$3,179
5600-0078	Whelen Super LED beacon (PR) model L31H with [#COL] domes. Location [#LOC].	$1,964
5600-0079	Whelen beacon with halogen rotator and 700 series LED (PR) Model B6TM with red domes and [#COL] LEDs. Location [#LOC].	$1,487
5600-0080	Whelen beacon with LED upper beacon and 700 series Super LED (PR) model B6LED with red domes and [#COL] LEDs. Location: [#LOC].	$3,008
5600-0081	Code 3 / PSE Oscilaser warning light clear (PR). Lights are to be located on front of cab above quad bezels.	$661
5600-0083	Warning light Code3 LXEX1F-R LED (PR). Surfaced mounted with clear lens. Location: [#LOC]	$748
5600-0086	Whelen beacon model RB6T (PR) with [#COL] domes. Location: [#LOC].	$422
5600-0087	Warning light Code 3 65BZA LED (PR) amber. Surface mounted with bezel. Location: [#LOC]	$604
5600-0088	Warning light Code 3 65BZR LED (PR) Red. Surface mounted with bezel. Location: [#LOC]	$604
5600-0089	Warning Light Code3 model #65BZRW split red/clear LED with chrome bezel (PR). Location: [#LOC].	$793
5600-0090	Warning light Federal Signal QuadraFlare QL64XF LED (PR) red. Surface mounted with bezel. Location: [#LOC].	$638
5600-0093	Whelen beacon with halogen rotator and 700 series scene (PR) Model B6TH*Z1P. Dome color: [#COL]. Location [#LOC].	$1,254
5600-0094	Warning light Federal Signal QL64XF LED (PR) amber. Surface mounted with bezel. Location: [#LOC].	$638
5600-0098	Warning light Whelen 600 series Super LED (PR) amber. Location: [#LOC].	$635
5600-0099	Warning light Whelen 600 series Super LED (PR) red. Location: [#LOC].	$635
5600-0100	Warning light Whelen 600 series Super LED (PR) blue with clear lens. Location: [#LOC].	$635
5600-0101	Whelen beacon with halogen rotator and 700 series LED (PR) Model B6TM with amber dome on driver side, red dome officer side and [#COL] LEDs. Location [#LOC].	$1,487
5600-0105	Hazard (door ajar) light 2" LED. Location: [#LOC].	$37
5600-0106	Warning light Roto Ray LED with (2) red and (1) clear lights. Locate on front of cab center above grille.	$2,918
5600-0111	Warning light Whelen 600 series Super LED (PR) white with clear lens. Location: [#LOC].	$719

5600-0112	Warning light Whelen 600 series LED (PR) blue. Surface mounted. Location: [#LOC]	$943
5600-0117	Whelen Ultra Freedom Micro Edge LED (PR) model MCFLED25 clear lens with red LEDs. Location [#LOC].	$2,042
5600-0118	Warning light Whelen 500 series TIR6 Super LED (PR) red. Surface mounted 5TSMAC bezel with weatherproof connector. Location: [#LOC].	$536
5600-0119	Code 3 LED module and body lower level warning lights. Locate 45BZR red with clear lenses (1) each side below pump module, (1) each side centered in rear wheel well and (1) each in rubrail below L3/R3 offset rearward. Locate 65BZR red with clear lenses (1) each side rear compartment face mounted in taillight bezel.	$1,361
5600-0121	Upper rear warning lights. Code 3 MX718A1 (Pr). Clear Upper / Clear Lower lens with (1) 50W standard and (1) 50W fast red rotators. The Optix LED module to be amber drivers side and red officers side. (1) takedown light each side will activate when truck is in reverse and when the scene light switch is activated. Location: (1) each side rearward on roof top compartments	$1,581
5600-0124	Warning light Code 3 LXEX1F-R LED (PR) red. Surface mounted with bezel. Location: [#LOC]	$739
5600-0125	Code3 model 780 LED flasher. Flasher will control lower level warning lights ipo multiplexing	$1,730
5600-0128	Warning light Whelen 600 series split Super LED (PR) red/amber. Location: [#LOC]	$823
5600-0129	Warning light Whelen 600 series split Super LED (PR) red/clear. Location: [#LOC].	$886
5600-0130	Whelen model UFM8 LED flasher (PR). Flashers will control lower level warning lights ipo internal flashers. Locate (1) in cab and (1) in body.	$1,170
5600-0131	Light Whelen model PSR00FRR LED (PR) red. Location: [#LOC].	$404
5600-0132	Warning light Federal Signal QL64XF LED (PR). (1) red and (1) green. Location: Red driver and green officer in front quad inboard of NFPA warning light	$851
5600-0133	Warning light Whelen 900 series Super LED model 90RR5FRR (PR) red. Location: [#LOC].	$1,248
5600-0134	Warning light Whelen 600 series LED red/clear. Surface mounted with weatherproof connector(PR). Location: [#LOC]	$825
5600-0136	Federal MicroEscape LED beacon (PR) with [#COL] lenses. Location: [#LOC]. Requires additional upper level warning or Signal Master.	$2,132
5600-0137	Warning light Whelen 700 series Super LED (PR) red/clear. Surface mounted with weatherproof connector. Location: [#LOC]	$835
5600-0138	Warning light Whelen LIN3 series Super LED (PR) red with clear lens. Surface mounted RFLANGCD bezel with weatherproof connector. Location: [#LOC]	$400
5600-0139	Whelen beacon with LED upper beacon and 700 series Super LED (PR) model B6LED with red LEDs/clear domes and [#COL] LEDs/clear lenses. Location: [#LOC].	$3,008
5600-0140	Warning light circuit wiring through chassis reverse. All warning lights.	$81
5600-0142	Warning light Whelen 900 series Super LED model 90RA5FCR (PR) split red (bottom) / amber (top) with clear lenses. Location: [#LOC]	$1,248
5600-0143	Warning lights Whelen 600 series Super LED (PR) red w/clear lens. Location: [#LOC].	$635
5600-0147	Warning light Whelen 600 series LED (PR). Red driver, blue officer surface mounted with weatherproof connector. Location: [#LOC]	$882
5600-0151	Whelen Ultra Freedom Micro Edge LED (PR) (1) driver Model MCFLED25 clear lense with red LEDs and (1) officer MCFLED22 clear lense with blue LEDs. Requires addtional upper level warning lights to meet NFPA. Location: [#LOC].	$2,188
5600-0153	Warning light Whelen 600 series split Super LED (PR) red/blue driver, red/amber officer. Location: [#LOC].	$823
5600-0154	Warning light Whelen 600 series Super LED (PR). Red driver, blue officer surface mounted with weatherproof connector. Location: [#LOC].	$635
5600-0156	Warning light Federal Signal QL64XF LED (PR) green. Surface mounted with bezel. Location: [#LOC].	$702
5600-0157	Federal Model SY12FS Sentry with green dome. Includes switch on driver overhead. Location: pole mounted center rear cab roof.	$412
5600-0160	Warning light Federal Signal QL97XF LED (PR) red. Surface mounted with bezel (if applicable). Location: [#LOC].	$919
5600-0161	Warning light Federal Signal QL97XF LED (PR) amber. Surface mounted with bezel (if applicable). Location: [#LOC]	$919
5600-0162	Warning light Federal Signal QL64XF LED (PR) blue. Surface mounted with bezel. Location: [#LOC].	$638
5600-0164	Warning light Federal Signal QL64XF LED (PR) white. Surface mounted with bezel. Location: [#LOC].	$738
5600-0165	Warning light Whelen 500 series Super Linear LED (PR) green. Location: [#LOC].	$566
5600-0166	Warning light Whelen 600 series Super LED (PR) green. Location: [#LOC].	$837
5600-0168	Fed QuadraFlare QL97SC-RA Red/Amber split color LED lights located on rear of body up high. Red on top on left side and bottom on right side to simulate "X" pattern. Includes external flasher.	$1,148
5600-0169	Warning light Whelen 900 series Super LED driver side amber / officer side red model 90AA5FAR / 90RR5FRR. Location: [#LOC].	$1,248
5600-0172	Warning light Whelen 900 series Super LED model 90AA5FAR (PR) amber. Location: [#LOC].	$1,248
5600-0173	Federal MicroEscape NFPA compliant LED beacons (PR) clear lenses with [#COL] LED reflectors. Location: [#LOC].	$1,592
5600-0177	Whelen model UFM8 LED flasher (3). Flashers will control warning lights ipo internal flashers. Locate (1) in cab and (2) in body.	$1,755
5600-0181	Warning light Federal Signal Model 360501 LED w/ bezel (PR). Surfaced mounted with blue driver and red officer lenses. Location: [#LOC].	$590
5600-0182	Whelen beacon with LED upper beacon and 700 series Super LED (PR) Model B6LED with amber domes and [#COL] LEDs. Location [#LOC]	$3,008
5600-0183	Warning light Whelen 600 series Super LED (PR). blue driver, green officer surface mounted with weatherproof connector. Location: [#LOC].	$737
5600-0184	Warning light Federal Signal QL64XF LED (PR). (1) red driver, (1) blue officer. Surface mounted with bezel. Location: [#LOC]	$638

5600-0185	Federal Model IVP100 Vector pod (PR) located at the rear cab corners. Driver side to be amber with switch on driver's switch panel and automatically turn off when warning lts are on. Officer side to be blue with switch on driver's switch panel.	$811
5600-0187	Warning light Federal Signal QL97XF LED (PR). (1) red driver, (1) blue officer. Surface mounted with bezel (if applicable). Location: [#LOC].	$919
5600-0189	Federal Intelli model 650205 LED flasher (PR). Flashers will control lower level warning lights ipo internal flashers. Locate (1) in cab and (1) in body.	$928
5600-0190	Warning light Whelen 600 series Super LED (PR). Blue driver, amber officer surface mounted with weatherproof connector. Location: [#LOC].	$635
5600-0191	Whelen beacon with LED upper beacon and 700 series Super LED (PR) Model B6LED with amber driver and red officer domes and [#COL] LEDs. Location [#LOC].	$3,008
5600-0195	Code3 model XP9501NFPA1 (PR) red LED with clear domes. Location: [#LOC].	$2,160
5600-0197	Warning light Whelen 600 series Super LED (PR). red driver, green officer surface mounted with weatherproof connector. Location: [#LOC].	$737
5600-0199	Whelen beacon with LED upper beacon and 700 series Super LED (PR) Model B6LED with red driver and blue officer domes and [#COL] LEDs. Location [#LOC].	$3,008
5600-0200	Whelen beacon with LED upper beacon and 700 series Super LED (PR) Model B6LED with red driver and amber officer domes and [#COL] LEDs. Location [#LOC].	$3,008
5600-0201	Warning light Whelen 900 series Super LED model 90RB5FCR (PR) split red / blue with clear lense. Location: [#LOC].	$1,248
5600-0202	Warning light Weldon Diamondback V46W-C00R LED (PR) red w/ clear lenses. Includes diamond plate mounting box. Location: [#LOC].	$971
5600-0205	Warning light Federal Signal GL1F-B LED (PR) blue. Location: [#LOC].	$604
5600-0213	Whelen beacon with halogen rotator and 700 series LED (PR) Model B6TM with red dome on driver side, amber dome officer side and [#COL] LEDs. Location [#LOC].	$1,487
5600-0215	Power Arc (PR) Model LED210 yellow with clear lenses. Location: [#LOC].	$1,317
5600-0216	Warning light Whelen M9 series Super LED (PR) red. Location: [#LOC].	$1,438
5600-0217	Power Arc (PR) Model LED210 red with clear lenses. Location: [#LOC].	$1,317
5600-0223	Warning light Code 3 378ABZ LED (PR) amber. Surface mounted with bezel. Location: [#LOC].	$719
5600-0226	Warning light Federal Signal Model 360501-04 LED w/ bezel (PR). Surfaced mounted with red lens. Location: [#LOC].	$422
5600-0227	Warning light Whelen 600 series Super LED (PR). Red driver, blue officer surface mounted with clear lenses and weatherproof connector. Location: [#LOC].	$635
5600-0228	Warning light Whelen 900 series Super LED (PR) with clear lenses. (1) model 90RR5FCR red driver and (1) model 90BB5FCR blue officer. Each light shall have a clear lense w/ colored LEDs. Location: [#LOC].	$1,248
5600-0230	Warning light Whelen 600 series Super LED (PR) blue with blue lens. Location: [#LOC].	$635
5600-0236	Whelen beacon with LED upper beacon and 700 series Super LED (PR) model B6LED with blue driver and red officer domes and [#COL] LEDs. Location: [#LOC].	$3,008
5600-0238	Warning light Whelen 600 series Super LED (PR). (1) red steady burn front driver side below windshield and (1) flashing amber driver side above tail lights to meet California DOT requirements.	$635
5600-0241	Warning light Whelen M6R series Linear Super LED (PR) red. Location: [#LOC].	$726
5600-0242	Warning light Whelen M6 series Linear Super LED (PR) split red/amber with clear lens. Location: [#LOC].	$796
5600-0245	Warning light Federal Signal QL64XF LED (PR) red with clear lens. Surface mounted with bezel. Location: [#LOC]	$638
5600-0248	Warning light Whelen M9 series Super LED (PR) red driver, blue officer with clear lenses. Location: [#LOC].	$1,438
5600-0249	Warning light Whelen M6 series Linear Super LED (PR) red driver, blue officer with clear lenses. Location: [#LOC].	$726
5600-0250	Whelen beacon with LED upper beacon and 700 series Super LED (PR) Model B6LED with red LED/clear dome driver and blue LED/clear dome officer and [#COL] LEDs/clear lenses. Location: [#LOC].	$3,008
5600-0251	3m Opticom GPS vehicle system kit. Includes antenna, radio and control unit. Wired through park brake.	$8,753
5600-0252	Hazard (door ajar) light Federal Signal Fire Bolt strobe. Location: [#LOC].	$254
5600-0253	Warning light Federal Signal QL97XF LED (PR). (1) red driver, (1) amber officer. Surface mounted with bezel (if applicable). Location: [#LOC]	$919
5600-0254	Warning light Federal Signal QL97XF LED (PR). (1) amber driver, (1) red officer. Surface mounted with bezel (if applicable). Location: [#LOC]	$919
5600-0255	Warning light Whelen 900 series Super LED driver side red model (90RR5FRR) / officer side amber (90AA5FAR). Location: [#LOC]	$1,248
5600-0256	Warning light Whelen M-Series Super LED model M9J (PR) red/blue. Surface mounted with weatherproof connector. Location: [#LOC].	$1,438
5600-0257	Warning light Whelen M6 series Linear Super LED (PR) split red/blue with clear lens. Location: [#LOC].	$796
5600-0258	Warning light Whelen M9RC series Super LED (PR) red with clear lens. Location: [#LOC].	$1,220
5600-0259	Warning light Whelen M6BC series Linear Super LED (PR) blue with clear lens. Location: [#LOC].	$726
5600-0262	Warning light Whelen 900 series Super LED model 90RA5FCR (PR) split red / amber with clear lense. Location: [#LOC].	$967
5600-0264	Whelen beacon with LED upper beacon and 700 series Super LED (PR) Model B6LED with blue LED/clear dome driver and red LED/clear dome officer and 700 series [#COL] LEDs/clear lenses. Location: [#LOC].	$3,008
5600-0269	Whelen Super LED beacon (PR) model L31H with red driver, amber officer LED and clear domes. Location [#LOC].	$1,964
5600-0272	Hazard (door ajar) light Federal Signal 2.5" LED model 607120-04. Location: [#LOC].	$62

5600-0273	Warning light Whelen 900 series Super LED (PR). (1) model 90RR5FCR red driver and (1) model 90BB5FCR blue officer. Each light shall have a clear lense w/ colored LEDs. Location: side facing (1) each side upper front body panels and side facing (1) each side upper rear body panels.	$1,248
5600-0274	Warning light Whelen 900 series Super LED (PR). (1) model 90RR5FCR red driver and (1) model 90BB5FCR blue officer. Each light shall have a clear lense w/ colored LEDs. Location: Rear facing up high on the rear one above each other.	$1,248
5600-0275	Warning light Whelen M6AC series Linear Super LED (PR) amber with clear lens. Location: [#LOC].	$726
5600-0276	Whelen Ultra Freedom Micro Edge LED (PR) model MCFLED clear lens with amber driver / red officer LEDs. Location [#LOC].	$2,042
5600-0277	Warning light Whelen M6C series Linear Super LED (PR) white. Location: [#LOC].	$726
5600-0279	Hazard (door ajar) light Whelen model L53RP red. Location: [#LOC].	$253
5600-0284	Whelen Super LED beacon (PR) model L31H with blue driver, red officer LED and clear domes. Location [#LOC].	$1,964
5600-0285	Warning light Roto-Ray LED with (1) red, (1) blue and (1) clear lenses. Locate on front of cab center above grille.	$2,918
5600-0286	Warning light Whelen M6RC series Super LED (PR) red with clear lens. Location: [#LOC].	$694
5600-0288	Whelen red TIR3 LED light heads (2). Locate in rubrails below compartments L1 and R1.	$303
5600-0289	Warning light Whelen 900 series Super LED model 90BB5FBR (PR) blue. Location: [#LOC].	$1,248
5600-0290	Warning light Whelen 600 series Super LED (PR) red with diamond plate mounting boxes. Location: [#LOC].	$817
5600-0291	Warning light Roto Ray LED with (1) red, (1) green and (1) white lights. Locate on front of cab center above grille.	$2,918
5600-0292	Warning light Whelen 900 series Super LED model 90RR5FRC (PR) red w/ clear lens. Location: [#LOC].	$1,248
5600-0294	Warning light Federal Signal IMPAXX model IPX600-R red LED w/ bezel (PR). Surfaced mounted with clear lens. Location: [#LOC].	$491
5600-0298	Warning light Power Arc model M90FK-W LED (PR). Color: White. Location: [#LOC].	$1,051
5600-0299	Warning light Federal Signal IMPAXX LED model IPX302-4 w/ bezel (PR). Surfaced mounted with red lens. Location: [#LOC].	$337
5600-0301	Warning light Whelen M2 Super LED warning lights. Includes (2) red M2R LED light heads w/chrome flanges (if applicable). Location: [#LOC].	$578
5600-0302	Warning light Whelen M2 Super LED warning lights. Includes (2) red M2R LED light heads with clear lenses and chrome flanges (if applicable). Location: [#LOC].	$578
5600-0303	Whelen Super LED beacon (PR) model L31H with [#COL] domes. Location [#LOC].	$1,964
5600-0305	Warning light Whelen M6 series Linear Super LED (PR) amber driver, red officer with clear lenses. Location: [#LOC].	$726
5600-0306	Opticom Emitter 3M 794H. LED emitter and control only. Location and activation: [#LOC].	$2,447
5600-0307	Warning light Whelen 600 series LED (PR) with clear lens. Red driver, blue officer surface mounted with weatherproof connector. Location: [#LOC]	$882
5600-0310	Warning light Whelen M6 series Linear Super LED (PR) split red/clear with clear lens. Location: [#LOC].	$796
5600-0311	Warning light Whelen 900 series Super LED model 90AA5FCR (PR) amber with clear lenses. Location: [#LOC].	$1,248
5600-0312	Light Whelen model PSA00FAR LED (PR) amber. Location: [#LOC].	$404
5600-0313	Warning light Whelen 900 series Super LED with clear lens model 90BB5FCR (PR) blue. Location: [#LOC].	$1,248
5600-0314	Federal Signal Vision LED rotating beacons model VSLR-IPX-R1R21 with rear facing IPX6 red LED warning light (Requires additional rear facing warning lights for NFPA compliance). Location: [#LOC].	$2,457
5600-0315	Whelen Micro Liberty LED (PR) (1) driver Model MCSLED2R clear lense with red LEDs and (1) officer MCSLED2B clear lense with blue LEDs. Location: [#LOC].	$1,720
5600-0316	Warning light Whelen M4AC Super-LED lights (PR) amber with clear lenses. Location: [#LOC].	$931
5600-0317	Whelen Super LED beacon (PR) model L31H with red driver, blue officer LED and clear domes. Location: [#LOC].	$1,964
5600-0318	Whelen Ultra Freedom Micro Edge LED (PR) (1) officer Model MCFLED25 clear lense with red LEDs and (1) driver MCFLED22 clear lense with blue LEDs. Requires addtional upper level warning lights to meet NFPA. Location: [#LOC].	$2,188
5600-0322	Warning light Whelen M7D series Linear Super LED (PR) split red/clear with clear lens. Location: [#LOC].	$805
5600-0328	Warning light Whelen M7 series Linear Super LED (PR) white light with clear lens. Location: [#LOC].	$705
5600-0330	Warning light Federal Signal IMPAXX model IPX602-R red LED w/ bezel (PR). Surfaced mounted with red lens. Location: [#LOC].	$491
5600-0331	Federal Signal Vision LED rotating beacons model VSLR-R with red LED warning light(s) and red lenses (Requires additional rear facing warning lights for NFPA compliance). Location: [#LOC].	$1,836
5600-0333	Warning light Whelen M9 series Super LED (PR) red driver, amber officer. Location: [#LOC].	$1,438
5600-0336	Warning light Roto Ray LED with (1) red, (1) amber and (1) clear lights. Locate on front of cab center above grille.	$2,918
5600-0338	Warning light Whelen M9 series Super LED (PR) red officer, amber driver. Location: [#LOC].	$1,438
5600-0339	Warning light Whelen 600 series Super LED (PR). Red officer, blue driver surface mounted with weatherproof connector. Location: [#LOC].	$635
5600-0340	Warning light Whelen M6 series Linear Super LED (PR) red driver, blue officer. Location: [#LOC].	$726
5600-0341	Warning light Whelen 600 series split Super LED (PR) red/blue with clear lens. Location: [#LOC].	$823
5600-0342	Whelen beacon with LED upper beacon and 700 series Super LED (PR) Model B6LED with blue driver and amber officer domes and [#COL] LEDs. Location [#LOC].	$3,008

5600-0343	Whelen red TIR3 LED light heads (2). Locate in rubrail below pump module offset forward.	$303
5600-0345	Warning light Federal Signal IMPAXX LED model IPX300-4 w/ bezel (PR). Surfaced mounted red LEDs with clear lens. Location: [#LOC].	$337
5600-0347	Warning light Whelen 900 series Super LED blue driver, amber officer. Location: [#LOC].	$1,248
5600-0349	Whelen red TIR3 LED light heads (2). Locate on front cab hood corners, one (1) each side. Commerical chassis only.	$303
5600-0352	Warning light Whelen M6G series Linear Super LED (PR) green. Location: [#LOC].	$932
5600-0354	Warning lights Whelen LINZ6 LEDs (PR) red in color with chrome bezels if applicable. Location: [#LOC].	$484
5600-0355	Whelen beacon with LED upper beacon and 700 series Super LED (PR) Model B6LED with blue domes and [#COL] LEDs. Location: [#LOC].	$3,008
5600-0357	Warning light Whelen M6 series Linear Super LED (PR) red driver, green officer. Location: [#LOC].	$726
5600-0358	Warning light Federal Signal Viper EXT Model VPX802-4 LED w/ bezel rear upper level package. Includes (9) surfaced mounted with red lens; (5) up high rear of body and (2) side facing on each side of body up high and rearward (as applicable).	$2,589
5600-0359	Warning light Federal Signal IMPAXX LED model IPX302 w/ bezel (PR) (driver blue, officer red). Surfaced mounted with colored lens. Location: [#LOC].	$337
5600-0360	Warning light Federal Signal QuadraFlare QL64XF LED (EA) red. Light to be steady burn to meet California DOT requirements. Surface mounted with bezel. Location: [#LOC].	$285
5600-0362	Power Arc beacon (PR) Model LEDB210 with [#COL] domes. Location: [#LOC].	$1,294
5600-0364	Warning light Roto Ray LED with (2) green and (1) clear lights. Locate on front of cab center above grille.	$2,918
5600-0366	Warning light Whelen 500 series TIR6 Super LED (2) blue and (3) amber. Surface mounted 5TSMAC bezel with weatherproof connector. Lights to activate when park brake is set in blocking mode. Location: [#LOC].	$1,340
5600-0367	Warning light Whelen 600 series Super LED (PR) amber with clear lens. Location: [#LOC].	$635
5600-0368	Warning light Whelen M6A series Linear Super LED (PR) amber. Location: [#LOC].	$726
5600-0369	Whelen Ultra Freedom Micro Edge LED (PR) model MCFLED2 clear lens with red driver / amber officer LEDs. Location: [#LOC].	$2,042
5600-0370	Warning light Whelen M-Series Super LED model M9AC (PR) amber with clear lens. Surface mounted with weatherproof connector. Location: [#LOC].	$1,220
5600-0371	Whelen Ultra Freedom Micro Edge LED (PR) model MCFLED2RB clear lens with (1) red/(1) blue LEDs. Location: [#LOC].	$2,042
5600-0372	Light Code 3 model DB2-2PZNFPA2 (PR) with clear lenses. Located: [#LOC].	$2,049
5600-0373	Warning Light Code3 model #65BZCB blue LED with clear lens and chrome bezel (PR). Location: [#LOC].	$1,141
5600-0374	Warning light Federal Signal QL64XFC LED (PR) blue with clear lenses. Surface mounted with bezel. Location: [#LOC].	$638
5600-0375	Warning light Federal Signal IMPAXX model IPX600-B blue LED w/ bezel (PR). Surfaced mounted with clear lens. Location: [#LOC].	$491
5600-0377	Federal Signal Vision LED rotating beacons model VSLR-R2A02 with rear facing IPX6 amber LED warning light. Location: [#LOC].	$2,457
5600-0378	Warning light Code 3 65BZCR LED (PR) Red with clear lens. Surface mounted with bezel. Location: [#LOC]	$604
5600-0379	Warning light Federal Signal QL97XFC-R LED (PR) red with clear lenses. Surface mounted with bezel (if applicable). Location: [#LOC].	$919
5600-0380	Warning light Federal Signal QL64SFC split LED (PR) driver red/clear, officer red/green. Surface mounted with bezel. Location: [#LOC].	$803
5600-0381	Hazard (seat belt warning) blue light 2" LED. Location: Adjacent to door ajar light.	$37
5600-0383	Warning light Whelen 900 series Super LED (PR). (1) model 90RR5FRR red driver and (1) model 90BB5FBR blue officer. Location: [#LOC].	$1,248
5600-0384	Tomar model RECT-79-TSMF bezel (PR) for Whelen 900 series lights. Lights to be angled forward. Location: driver and officer gravel shield mounted lights.	$191
5600-0385	Whelen Super LED ROTA-BEAM beacon (PR) model R316 Series [#COL] domes. Location [#LOC].	$2,138
5600-0386	Warning light Whelen M2 Super LED warning lights. Includes (2) amber M2A LED light heads w/chrome flanges (if applicable). Location: [#LOC].	$578
5600-0387	Whelen amber TIR3 LED light heads (2). Locate [#LOC].	$303
5600-0388	Hazard (light tower ajar) amber light 2" LED. Location: [#LOC].	$37
5600-0389	Warning light Whelen M4RC Super-LED lights (PR) red with clear lenses. Location: [#LOC].	$556
5600-0391	Warning light Whelen M4R Super-LED lights (PR) red. Location: [#LOC].	$556
5600-0392	Whelen Ultra Freedom Micro Edge LED (PR) model MCFLED2 clear lens with blue driver / red officer LEDs. Location (1) each side of body on rearward compartment top.	$1,990
5600-0393	Warning light Whelen M6GC series Linear Super LED (PR) green with clear lenses. Location: [#LOC].	$741
5600-0395	Warning light Whelen M-Series Super LED model M9K (PR) red/amber. Surface mounted with weatherproof connector. Location: (1) on each side up high rear of body.	$1,438
5600-0397	Warning light Whelen WIONA series Super LED amber in color (ea). Locate rear of body below directional lightbar wired through reverse.	$331
5600-0398	Warning light Whelen 500 series TIR6 Super LED (PR)1-red driver, 1-green officer. Surface mounted 5TSMAC bezel with weatherproof connector. Location: [#LOC].	$536
5600-0399	Warning light Whelen M9 series Super LED (PR) red with diamond plate mounting boxes. Location: [#LOC].	$1,539
5600-0401	Warning light Whelen M6B series Linear Super LED (PR) blue. Location: [#LOC].	$726
5600-0402	Warning light Whelen M9 series Super LED (PR) blue driver, red officer with clear lenses. Location: [#LOC].	$1,438

5600-0404	Whelen beacon with LED upper beacon and 700 series Super LED (PR) Model B6LED with amber LED/clear dome driver and red LED/clear dome officer and [#COL] LEDs/clear lenses. Location: [#LOC].	$3,008
5600-0405	Warning light Whelen M9 series Super LED (PR) red with (1) officer side diamond plate mounting box. Location: driver side facing uppper body corner, officer rear compartment top outboard.	$1,492
5600-0406	Warning light Whelen 500 series TIR6 Super LED (2) blue and (3) red. Surface mounted 5TSMAC bezel with weatherproof connector. Lights to activate when park brake is set in blocking mode. Location: [#LOC].	$1,340
5600-0407	Whelen Ultra Freedom Micro Edge LED (PR) model MCFLED red lens with red LEDs. Location [#LOC].	$2,042
5600-0408	Warning light Federal Signal QL97XF LED (PR) red with diamond plate mounting box. Surface mounted with bezel (if applicable). Location: [#LOC].	$1,100
5600-0409	Whelen beacon with LED upper beacon and 700 series Super LED (PR) model B6LED with red domes and 700 series Super LED scene lights rear facing. Location: [#LOC].	$3,174
5600-0410	Warning light Whelen 600 series Super LED (PR) red with black flange. Location: [#LOC].	$635
5600-0412	Warning light Federal Signal QL64XF LED (EA) white. Surface mounted with bezel. Location: [#LOC].	$370
5600-0413	Warning light Federal Signal IMPAXX model IPX600-W white LED w/ bezel (PR). Surfaced mounted with clear lens. Location: Front cab corners adjacent to existing fixtures.	$561
5600-0414	Warning light Whelen 900 series Super LED (PR). (1) model 90RR5FRR red officer and (1) model 90BB5FBR blue driver. Location: [#LOC].	$1,248
5600-0415	Warning/Scene light Whelen M9V2R Super LED (PR) red. Location: [#LOC].	$2,095
5600-0417	Enclose bottom of aerial style bracket for no exposed wiring.	$98
5600-0418	Warning light Whelen 500 series TIR6 Super LED red. Surface mounted 5TSMAC bezel with weatherproof connector. Light to be steady burn while the parking brake is disengaged. Location: Centered in front cab grill	$312
5600-0420	Power Arc (PR) Model LED210 driver blue, officer red. Location: [#LOC].	$1,317
5600-0421	Whelen beacon with Rota-Beam LED upper beacon and M7 series Super LED (PR) model B63M7 with red domes and [#COL] LEDs. Location: [#LOC].	$3,262
5600-0422	Warning light Whelen WIONR series Super LED red in color (PR). Locate [#LOC].	$590
5600-0423	Warning light Whelen Rota-Beam series model 6RBRC Super LED (PR) red with clear lenses. Location: [#LOC].	$1,014
5600-0424	Warning light Whelen M6 series Linear Super LED (PR) blue driver, red officer with clear lenses. Location: [#LOC].	$726
5600-0425	Code 3 / PSE Oscilaser warning light red (PR). Lights are to be located on front of cab above quad bezels.	$661
5600-0426	Warning/Scene light Whelen M9V2 Super LED (PR) red driver, blue officer with clear lenses. Location: [#LOC].	$2,095
5600-0427	Warning light Whelen M9 series Super LED (PR) blue driver, red officer. Location: [#LOC].	$1,438
5600-0429	Warning/Scene light Whelen M9V2 Super LED (PR) red driver, blue officer. Location: [#LOC].	$2,095
5600-0431	Warning light Whelen 600 series Super LED (PR). Amber driver, blue officer surface mounted with weatherproof connector and clear lenses. Location: [#LOC].	$635
5600-0432	Warning light Whelen 600 series Super LED (PR). Red officer, blue driver surface mounted with clear lenses and weatherproof connector. Location: [#LOC].	$635
	MISC LOOSE EQUIPMENT	
7000-0003	Akron Brass stacked tips w/stream shaper. Base style 3485 & Stacked Tips style 3499.	$639
7000-0004	Loose Equipment Package for Montral. See files tab for quote.	$11,807
7000-0007	Mercury Quick Attack Monitor 2.5" NH x 2.5" NH monitor, with 4447 nozzle, and mounting bracket.	$3,776
7000-0008	Akron Apollo 3423 deck monitor with ground base. To include stacked tips 2499, 3488 steam shaper, and direct truck mount base.800/1250 GPM. 2.5	$3,030
7200-0001	Adapter Chrome 3"FNST x 2.5"MNST with Cap.	$246
7200-0002	Swivel Chrome Connector 4.5"FNST x 2.5" FNST Long Handle	$247
7200-0009	Adapter Wye 4"FNST x (2) 2.5" FNST	$757
7200-0010	Adapter 2.5" FNST x 2.5" F British Instantaneous.	$214
7200-0011	Adapter 2.5" MSNT x 2.5" M British Instantaneous.	$161
7200-0013	Adapter Collector 6"FNST x (3) 2.5"M British Instantaneous	$962
7200-0014	Adapter 2.5"FNST x 4" Storz	$362
7200-0015	Adapter 3"FNST x 4" Storz with cap.	$380
7200-0016	Adapter 3"FNST x 5" Storz and insert cap.	$466
7200-0017	Swivel connector 5"FNST x 4" Storz with tethered Cap.	$445
7200-0018	Swivel Connector 4" FNST x 4" Storz with Tethered Cap.	$336
7200-0019	Swivel connector 4"FNST x 5" Storz with tethered cap.	$423
7200-0020	Swivel connector 5"FNST x 5" Storz with tethered cap.	$511
7200-0021	Swivel Connector 6" FNST x 4" Storz with Tethered Cap.	$488
7200-0023	Swivel Connector 3" FNST x 4" Storz 30 Degree Elbow with Tethered Cap.	$516
7200-0024	Swivel Connector 3"FNST x 5" Storz 30 Deg Elbow with Tethered Cap.	$643
7200-0025	Swivel Connector 4"FNST x 4" Storz 30 Deg Elbow with Tethered Cap.	$352
7200-0026	Swivel Connector 4" FNST x 5" Storz 30 Deg Elbow with Tethered Cap.	$433
7200-0029	Adapter Wye 5"FNST x (2) 2.5" FNST	$841
7200-0031	1.5" Chrome Cap w/Chain.	$19
7200-0036	Intake 6" Elkhart Elk-O-Lite 9786 Piston Valve. Ship Loose.	$2,146
7200-0040	Chrome adapter for 2.5" discharge. Includes 2.5" FNST x 1.5" IPT thread with cap.	$72
7200-0043	Intake 6" Northline FSGR Piston Valve with intake Relief. ship loose	$1,247
7200-0044	Adapter.75 FGHT (garden hose) x 1.5" Storz	$92
7200-0045	Intake gated relief valve. 6"FNST x 6"MNST.	$1,086
7200-0054	Adapter wye suction 6"FNST x (3) 2.5" FNST	$1,852
7200-0063	Chrome adaptor for 2.5" discharge. Includes 2.5" FCSA x 1.5" NPSH threads with caps.	$108

7200-0065	Adapter Connector 3"MNST x 4" Storz with Tethered Cap	$369
7200-0068	A 2.5" MNST x 2.5" FAMA with Plug Adapter	$77
7200-0069	A 2.5" FNST x 2.5" MAMA With Cap adapter shall be provided.	$110
7200-0072	A 2.5" FNST x 2.5" M2.962x8TPI With Cap adapter shall be provided.	$135
7200-0094	Adapter 1.5" Female NST x 1" Male Mass Forestry Threads. (1.429 OD-11 threads per inch)	$64
7200-0095	Akron 7980 Piston Intake Valve with 5" Storz outlet.	$2,360
7200-0096	Akron 7980 Piston Intake Valve with 4" Storz outlet with cap.	$1,866
7200-0100	Intake 6" Elkhart Elk-O-Lite 9786 Piston Valve. Ship Loose. The valve shall have an 6" female NST inlet and 5" swivel with a locking Stoz inlet	$2,146
7200-0101	Adapter 2.5FNST x 2.5M British Columbia Threads (BCT 3.00x8Tip) with Cap.	$192
7200-0102	Adapter 2.5MNST x 2.5F Swivel British Columbia Threads (BCT 3.00x8TPI) with Plug	$381
7200-0103	Inlet valve gated w/relief and elbow. 4"FNST x 4" STORZ and cap. (Kocheck Model 40K40204)	$2,440
7200-0105	Elkhart 18" Pipe Extender 8298EXw/8298.	$559
7200-0107	Adapter aluminum 3"FNST x 2.5"MNST with Cap.	$246
7200-0111	Adapter 2.5" female NST x 2.5" male Cleveland 3.078 x 8TPI with cap.	$194
7200-0112	Adapter 2.5MNST x 2.5F Swivel (Cleveland 3.078 x 8TPI) with Plug	$398
7300-0000	Reducer Chrome 2.5"FNST x 1.5"MNST.	$75
7400-0001	Chrome discharge elbow 3"FNST x 2.5"MNST 45 Deg	$264
7400-0003	Chrome discharge elbow 3" 30 Degree.	$247
7400-0004	Elbow 30 degree chrome swivel w/2.5"FNST x 2.5"MNST.	$75
7400-0005	Chrome discharge elbow 2.5", 45 degree.	$199
7400-0008	Chrome discharge elbow 3.0" FNST X 2.5" MCSA 30Deg chrome.	$270
7400-0010	Chrome discharge elbow 4" 30 Degree.	$477
7400-0012	Chrome discharge elbow 2.5" FNST x 2.5" Male 3.187 x 6 thread per inch with a 2.5" Female 3.187 x 6 thread per inch chrome rocker lug cap with chain, 45 Degree.	$243
7400-0013	Chrome discharge elbow 2.5" FNST x 2.5" Male 2.986 x 8 thread per inch with a 2.5" Female 2.986 x 8 thread per inch chrome rocker lug cap with chain, 45 Degree.	$243
7500-0000	Ziamatic Air Pack Bracket (2PHS) Model #UN-6-30-2PHS. Shipped loose.	$324
7500-0001	Ziamatic Air Pack Bracket (FPHS) Model #UN-6-30-3-FPHS. Shipped loose.	$329
7500-0002	Universal air pack bottle bracket (EA). Shipped loose.	$158
7500-0004	Bracket SCBA Lifeguard SmartDock Gen2 restraint system. Ship Loose.	$511
7550-0003	Extinguisher, ABC 20# dry chemical w/bracket. Amerex model A411	$253
7550-0004	Extinguisher 2.5 Gallon Water Pressure w/Bracket. Amerex model A240	$201
7600-0000	Axe bracket - shipped loose.	$101
7600-0001	Flat Head Axe 6 lb.	$65
7600-0002	Pick Head Axe 6#.	$81
7600-0003	Flat Head Axe 6# with Fiberglass Handle.	$139
7600-0004	Pick Head Axe 6# with Fiberglass Handle.	$143
7600-0005	Pike Pole Fiberglass 6'.	$145
7600-0006	Pike Pole Fiberglass 8'.	$96
7600-0007	Pike Pole Fiberglass 10'.	$184
7600-0008	Pike Pole Fiberglass 12'.	$194
7600-0013	Hooligan Tool 36".	$290
7600-0015	Wheel Chocks 32" NFPA Compliant - Pair of Zico AC-32. Up to 32" diameter Tires. Includes mounting bracket.	$485
7600-0016	Wheel chocks 44" NFPA compliant, pair (PR) of Zico SAC-44. Up to 44" diameter tires. Includes mounting brackets.	$546
7600-0019	Spanner Wrench (2) #10 with Holder.	$181
7600-0037	Wheel Chocks Aluminum Zico AC-32 with mounting brackets.	$297
7600-0057	Wrench lug 2pc - lug wrench in two (2) pieces. Lug ends are 1.5" and 1.312" (BRT19951) with handle (BRT17899).	$120
7600-0058	Wrench Hydrant w/2 Spanner Wrench Combination Set with Bracket. Meets FAA 10C Requirements for ARFF/Fire Trucks.	$137
7600-0059	Bracket Extinguisher Model A810 for use with extinguisher models A423, A408, A331 and A240.	$111
7600-0087	Pike Pole Fiberglass 8 Ft w/ D-Handle.	$96
7600-0088	Pike Pole 8 Ft. Firehooks Unlimited APH-8 pole.	$138
7600-0089	Pike Pole 6 Ft. Firehooks Unlimited New York hook RH-6 pole.	$147
7600-0090	Flat Head Axe 8# with Fiberglass Handle	$179
7600-0092	Rubber mallet with fiberglass handle.	$48
7600-0095	Pike Pole 6 Ft. Firehooks Unlimited APS-6 pole.	$166
7600-0099	Pike Pole 8 Ft. Firehooks Unlimited APH-8 pole with D-Handle.	$159
7600-0100	Pike Pole 10 Ft. Firehooks Unlimited APH-10 pole.	$201
7600-0101	Pike Pole 12 Ft. Firehooks Unlimited APH-12 pole.	$222
7600-0102	Pike Pole 6 Ft. Firehooks Unlimited APH-6 pole.	$125
7600-0103	Pike Pole 6 Ft. Firehooks Unlimited fiberglass MPH-6 pole. Includes gas shut-off end.	$128
7600-0104	Pike Pole 8 Ft. Firehooks Unlimited fiberglass MPH-8 pole. Includes gas shut-off end.	$150
7600-0105	Pike Pole 12 Ft. Firehooks Unlimited fiberglass MPH-12 pole. Includes gas shut-off end.	$229
7600-0108	Pike Pole 6 Ft. Akron UT-6-DWH with drywall hook.	$139
7600-0109	Pike Pole 10 Ft. Akron UT-10-DWH with drywall hook.	$152
7600-0110	Pike Pole 4 Ft. Akron UT-4-D-DWH with drywall hook and D-handle.	$139
7600-0111	Pike Pole 12 Ft. Akron PP-12 with USA standard hook.	$180
7600-0112	Pike Pole 8 Ft. Akron PP-8 with USA standard hook.	$151
7600-0113	Pike Pole 6 Ft. Akron PP-6 with USA standard hook.	$138
7600-0115	Pike Pole 8 Ft. Firehooks Unlimited New York hook RH-8 pole.	$154
7600-0116	Pike Pole Fiberglass 6 Ft w/ D-Handle.	$112
7600-0117	Pike Pole Fiberglass 12 Ft w/ D-Handle.	$138
7700-0004	Hard suction hose 6" X 10' with Pyrolite couplings.	$1,099
7700-0006	Booster hose 100' long, 1" 800 PSI.	$688

7700-0013	Hard Suction Hose 5" X 10' with Chrome Couplings	$948
7700-0015	Hard Suction Hose 6" X 10' with Chrome Couplings.	$1,320
7700-0017	Soft Suction Hose 6" x 4.5" with Long Handle Chrome Couplings.	$1,637
7700-0018	Soft Suction Hose 6" X 15' with Long Handle Chrome Couplings.	$1,408
7700-0020	Booster hose, 100' length of 3/4", 800 PSI.	$601
7700-0021	Booster Hose 50' Length 1" 800 PSI.	$466
7700-0023	Booster Hose 100' x 1" Reeltex (Each) Niedner Reeltex fabric booster hose with couplings.	$716
7700-0025	Hose, double jacket 50' length 1.5" 600 PSI.	$219
7700-0026	Double Jacket Hose 50' Length 2.5" 600PSI	$340
7700-0028	Elkhart 1" Pistol Grip Nozzle	$825
7700-0029	Akron 1" Pistol Grip Assault Nozzle	$705
7700-0030	Akron 1.5" Assault Nozzle	$763
7700-0031	Nozzle, Akron 1.5" pistol grip - 95 gpm.	$827
7700-0033	Nozzle Bracket (Each)	$83
7700-0050	Elkhart 282A Elk-O-Lite Stream Shaper	$194
7700-0051	Elkhart ST-194 Elk-O-Lite Stacked Tips.	$500
7700-0052	Elkhart SM-1250 Select-O-Matic Master Stream Nozzle	$1,187
7700-0053	PVC suction hose 6" X 10' with Pyrolite couplings.	$1,288
7700-0055	A twin 100'x1" dual agent booster hose shall be supplied.	$2,215
7700-0056	WFHC Hydro-Chem nozzle 1" 60 gpm.	$1,296
7700-0058	Akron Apollo (3433) High Rise Monitor. Include a dual inlet ground base, lift off, and direct mount base.	$3,750
7700-0060	Akron Quad Stacked Deluge Tips (2499). For use with Akron monitors. Ship Loose.	$482
7700-0061	Akron Turbomaster Nozzle (1755). Ship Loose.	$1,449
7700-0062	Nozzle Hydro-Foam 1.5" Williams Ranger	$2,020
7700-0065	Nozzle Akron 5160 Manual Akromatic	$1,070
7700-0066	Nozzle 1.5 20-95gpm TFT NH Threads Pistol Grip	$338
7700-0068	Hose 2.5" X 100' with 2.5" BSS couplings.	$543
7700-0072	Nozzle 2.5" TFT pistol grip with BSS coupling inlet.	$694
7700-0073	Akron Monitor Apollo 3423 portable.	$3,831
7700-0074	Nozzle 1.5" Turbojet high pressure	$421
7700-0079	TFT 3.5" Stacked Deluge Tips YST-4NN. For use with TFT Monitors. Ship Loose.	$777
7700-0084	Hard Suction Hose Rack 6" Hose (Each).	$392
7700-0087	Williams Dry Chem 1" Purple Flat lay Hose 50ft Lenght.	$202
7700-0097	Soft Suction Hose 20ft 5" with 4.5" long handle female coupler on one end and a 4.5" long handle male coupler on the other end.	$1,637
7700-0104	Booster Hose 100' x 1" Niedner Hotstop fabric booster hose with couplings.	$648
7700-0106	Kochek PVC Hard Suction Hose 6" x 8' with Pyrolite Couplings.	$844
7700-0107	Kochek PVC Hard Suction Hose 4" x 10' with Storz Pyrolite Couplings.	$557
7700-0108	Hose booster rubber 1" X100' Red in color with couplings Darley part number AC696.	$669
7700-0114	Hard suction hose 6" x 8' with Pyrolite couplings.	$891
7700-0115	Kochek PVC Hard Suction Hose 6" x 10' with Pyrolite Couplings.	$916
7700-0117	Hose, single jacket 50' length 1.5	$218
7700-0118	Akron Brass stacked tips w/stream shaper. Base style 3485 & Stacked Tips style 2499.	$638
7700-0119	Soft Suction Hose 20ft 5" with 6" long handle female swivel coupler on one end and a 4.5" long handle female swivel coupler on the other end.	$1,636
7800-0002	Alco-Lite FL-10, 10' folding ladder without shoes.	$268
7800-0003	10' folding Duo-Safety 585-A ladder.	$419
7800-0004	Aluminum Cast Bracket for Duo Safety Folding Ladder - For 8' or 10'	$445
7800-0006	Alco-Lite PRL-12 roof ladder.	$428
7800-0007	Alco-Lite PRL-14' roof ladder.	$456
7800-0008	14' roof ladder, Duo-Safety 775-A.	$631
7800-0009	Duo-Safety 16' 875-A roof ladder.	$487
7800-0010	Alco-Lite PRL-16' roof ladder.	$548
7800-0016	Alco-Lite PEL-24' 2-section extension ladder.	$932
7800-0017	Alco-Lite PEL3-24 extension ladder.	$1,343
7800-0018	Extension ladder, Duo-Safety 900-A, 24' 2-section.	$1,001
7800-0019	Vertical Ladder Bracket	$474
7800-0021	Alco-Lite PEL-28' extension ladder.	$1,210
7800-0022	Alco-Lite PEL-30 Extension Ladder	$1,302
7800-0023	Alco-Lite PEL3-35' 3-section extension ladder.	$1,646
7800-0025	Duo-Safety 1225-A 35' 3-section extension ladder.	$1,668
7800-0027	Little Giant model 17 ladder.	$765
7800-0032	Alco-Lite FL-10, 10' folding ladder w/safety shoes.	$268
7800-0033	Duo-Safety 20' 2-section extension ladder 900-A.	$1,018
7800-0038	Alco-Lite PRL-20' roof ladder.	$643
7800-0040	Alco-Lite PEL3-28 Extension Ladder	$1,419
7800-0041	Duo-Safety 1200-A, 28' 2-section extension ladder.	$1,229
7800-0043	Duo-Safety 12' 775-A roof ladder.	$420
7800-0044	Alco-Lite PEL-12 Extension Ladder	$628
7800-0046	Duo-Safety 300-A 13' combination ladder.	$556
7800-0047	Duo-Safety 925-A 26' 3-section extension ladder.	$1,112
7800-0062	Alco-Lite PRL-10 Roof Ladder.	$398
7800-0074	Duo-Safety 3-section 16' extension ladder, Wildland	$900
7800-0075	Duo Safety 3 Section 20' Extension Ladder, Wildland	$1,054
7800-0077	Duo-Safety 925-A 22' 3 Section Extension Ladder	$1,090
7800-0078	Alco-Lite FL-10, 10' folding ladder without shoes and handles.	$268
7800-0080	Aluminum Cast Bracket for Alcolite Folding Ladder - For 8' or 10'	$445

7800-0085	14' roof ladder, Duo-Safety 775-DR. Includes folding steel roof hooks on both ends with prong feet.	$666
7800-0087	Alco-Lite FEL3-35 3-section fiberglass extension ladder.	$1,796
7800-0088	10' roof ladder, Duo-Safety 775-DR. Includes folding steel roof hooks on both ends with prong feet.	$587
7800-0089	Duo-Safety 16' roof ladder 875-DR. Includes folding steel roof hooks on both ends with prong feet.	$760
7900-0007	Chrome Barrel Strainer 2.5"	$286
7900-0008	Chrome Barrel Strainer 5".	$358
7900-0009	Strainer Bracket 5"	$102
7900-0010	Chrome Barrel Strainer 6" NST.	$358
7900-0011	Strainer Bracket 6".	$111
7900-0012	Galvanized Strainer Basket 6"	$407
7900-0014	DOT Required Drive Away Kit - Kit includes three (3) triangular warning reflectors with carrying case. This kit is for the end user and is to remain with the truck.	$31
7900-0024	Foam 3% Chem Guard AFFF 5 gallon pail Mil Spec.	$99
7900-0031	Handheld flashlight, orange Streamlight Litebox flashlight with vehicle mount system.	$171
7900-0041	Ramsey QM9000, 9000 lb. portable winch.	$1,719
7900-0043	Firecom UH-40 headset.	$461
7900-0045	Poly Box 6" high x 8" wide x 22" deep.	$194
7900-0046	Goodyear front spare tire assembly with aluminum wheel to match front tire / wheel specification.	$2,117
7900-0047	Goodyear rear spare tire assembly with aluminum wheel to match rear tire / wheel specification.	$1,831
7900-0048	Michelin front spare tire assembly with aluminum wheel to match front tire / wheel specification.	$1,920
7900-0049	Michelin rear spare tire assembly with aluminum wheel to match rear tire / wheel specification.	$1,716
7900-0050	Goodyear front spare tire assembly with steel wheel to match front tire specification.	$1,533
7900-0051	Goodyear rear spare tire assembly with steel wheel to match rear tire specification.	$1,238
7900-0052	Michelin front spare tire assembly with steel wheel to match front tire specification.	$1,448
7900-0053	Michelin rear spare tire assembly with steel wheel to match rear tire specification.	$1,109
7900-0060	Monitor Akron #3426	$1,376
7900-0061	Firecom UH-10 headset.	$461
7900-0062	Firecom UH-10S headset.	$461
7900-0063	Firecom UH-20 headset.	$461
7900-0065	Customer supplied flashlights to be mounted in B1 compartment on adjustable shelf.	$192
7900-0066	Shoreline extension cord 50' of 12/3 black. (1) end 20A male household, (1) end 20A female auto eject.	$199
7900-0100	A 9000 lb Warn multi-mount (portable) electric reversible winch with 125' of 5/16" galvanized aircraft type cable and a replaceable clevis hook shall be installed and shall be controlled with a 12' remote control switch.	$1,877
7900-0101	Medical glove box. Shipped loose. Includes slotted top for dispensing gloves without opening hinged lid. Box to be same color as interior of cab. Secure lid in closed position with small butterfly latch.	$265
7900-0102	Manual cord reel for 200' of 10/3 wire and a 20amp twist lock connection.	$745
7900-0103	50 foot extension cord with Battery charger recept on one end.	$171
7900-0104	Ramsey QM8000 8000 lb portable winch	$1,635
7900-0107	Ship spare tire(s) via common carrier to customer location.	$158
7900-0108	Quartz light MagnaFire 750W/120V model KR-SB-836-TM-I with external mount tripod telepole. Shipped loose.	$1,293
7900-0120	HeartStart OnSite Automated External Defibrillator. Unmounted.	$2,158
7900-0128	Flashlight with LED bulb, mounted charger.	$138
7900-0133	Wabco diagnostic software - provided at delivery.	$120
7900-0135	Vest, traffic safety orange nylon mesh.	$15
7900-0143	Monitor Akron #3416	$1,476
7900-0144	TFT XFC 52 Package Crossfire Monitor, SAFE-TAK, Storage Bracket, MasterStream, Quad Stack Tips, Stream Straightener.	$4,843
7900-0151	Shoreline extension cord 50' of 12/3 black. (1) end 20A male household, (1) end 20A female auto eject.	$199
7900-0155	Junkin model JSA-300PCW stokes basket. Ship loose.	$806
7900-0157	Junction box Circle-D with four (4) 3-wire NEMA L5-20 110 volt 20 amp twist lock receptacles. Includes 3' pig tail with 20A TL connector.	$765
7900-0158	Junction box Circle-D with (2) 15 amp straight blade and (2) 20 amp twist lock receptacles. Includes 3' pig tail with 20 amp twist lock connector.	$966
7900-0159	Junction box Circle-D with (2) 15 amp straight blade and (2) 20 amp twist lock receptacles. Includes 20 amp twist lock inlet connector.	$966
7900-0161	Akron 3125 Portable Pyrolite Foam Eductor 125 gpm with 2.5" Swivel Connection.	$702
7900-0167	Junction box Circle-D with (1) 20 amp straight blade and (3) 20 amp twist lock receptacles. Includes 3' pig tail with 20 amp twist lock connector.	$966
7900-0170	Zico helmet holder model UHH-1 (EA). Ship loose.	$64
7900-0172	28" orange traffic cone with (2) reflective stripes.	$58
7900-0173	Junction box Woodhead with four (4) NEMA L5-15 110 Volt 15 Amp twist lock receptacles. Includes 12" pig tail with 20A TL connector.	$1,520
7900-0178	Generator Honda 2KW model EU2000iA with 1.6KW continuous output. Shipped loose.	$1,630
7900-0179	Akron Apollo (3416) Ground Mount, Pyrolite stream shaperand stacked tips base to have single 4" storz inlet.	$3,897
7900-0180	Cascade model CT-PSS1 one piece tapered stainless steel Pro Series stokes basket. Ship loose.	$1,310
7900-0181	Removable Speedlay Tray(s). The floor of the tray(s) to be slotted to prevent the accumulation of water and allow for ventilation of wet hose. This is in addition to the standard speedlay trays and are to be shipped loose.	$618

7900-0182	Removable Poly Speedlay Tray(s). The floor of the tray(s) to be slotted to prevent the accumulation of water and allow for ventilation of wet hose. This is in addition to the standard speedlay trays and are to be shipped loose.	$566
7900-0184	Roll-up door drip rail for body compartments.	$424
7900-0185	Rear underbody support frame.	$602
7900-0186	Tow eyes rear below body, painted. No mounting holes for frame rails.	$632
7900-0187	Wheel chocks 44" NFPA 1906 -06 complaint, pair (PR) of Zico SAC-44 with Wildland adapters and horizontal holders. Up to 44" diameter tires. Includes mounting brackets, all shipped loose.	$603
7900-0188	A 6000 lb Warn multi-mount (portable) electric reversible winch with 50' of 5/16" wire rope and a replaceable clevis hook shall be installed and shall be controlled with a 12' remote control switch.	$1,877
7900-0191	3000 Gallon steel portable fold-a-tank. Ship with unit stored in storage tank rack.	$972
7900-0193	Junction box Circle-D 3-wire 110V with (2) 20 amp straight blade and (2) 30 amp twist lock receptacles. Includes 12" pig tail with 30 amp twist lock connector.	$966
7900-0194	Tags - Innovative Controls. (7) tags labeled as follows: (5) SCBA Cylinder, (1) O2 Cylinder and (1) 5lb Dry Chem.	$103
7900-0203	Junction box Circle-D with (3) NEMA 5-20 120V GFCI duplex and (1) NEMA L6-20 220V twist lock receptacle. Includes 3' pig tail with L14-30P TL connector. Shipped loose.	$966
7900-0206	Junction box Akron with (4) 5-15 120v 15 Amp duplex recepts. Includes 12" pigtail with Hubbel L5-20 connector. Ship loose.	$705
7900-0207	FireCom wireless headset. One (1) model UHW-51 (intercom ordered separately).	$824
7900-0208	FireCom wireless headset. One (1) model UHW-54 (intercom ordered separately).	$824
7900-0209	FireCom slotted dome headset. One (1) model UH-51S, (intercom ordered separately).	$525
7900-0210	FireCom headset. One (1) model UH-51 (intercom ordered separately).	$525
7900-0211	FireCom headset. One (1) model UH-52 (intercom ordered separately).	$525
7900-0212	FireCom wireless headset. One (1) model UHW-52 (intercom ordered separately).	$824
7900-0214	FireCom slotted dome headset for wireless intercom. One (1) model UH-51S and one (1) model BP5-10 plug in belt pack to provide wireless headset functionality (intercom ordered separately).	$1,078
7900-0215	FireCom headset. One (1) model UH-54 (intercom ordered separately).	$525
7900-0217	Wheel Chocks 32" NFPA Compliant - Pair of Zico AC-32. Up to 32" diameter tires.	$297
7900-0218	Wheel chocks 44" NFPA complaint, pair (PR) of Zico SAC-44. Up to 44" diameter tires.	$628
7900-0225	Bostrom SecureAll mechanical air pack bottle bracket (EA) (included in loose equipment).	$531
7900-0226	Junction box Akron with four (4) 3-wire Nema L5-20 110Volt 20 Amp twist lock receptacles. Includes 12" pigtail with L5-20 connector. Ship loose.	$705
7900-0229	Zinc Plated Strainer Basket 6"	$257
7900-0231	Additional set of pump panel tags.	$197
7900-0232	Hosebed divider(s) short. To run above enhanced extended body to the rear of hose bed approximately 17" long x 22.25" high. Divider(s) to be shipped as loose equipment.	$81
7900-0233	Setcom headset. One (1) model CSB-900 radio transmit capable (intercom system ordered separately).	$520
7900-0234	Setcom headset. One (1) model CSB-901 intercom only (intercom system ordered separately).	$520
7900-0235	Setcom wireless headset with base. One (1) model CSB-900W3 radio transmit capable (intercom system ordered separately).	$1,123
7900-0236	Setcom wireless headset with base. One (1) model CSB-901W3 intercom only (intercom system ordered separately).	$1,123
7900-0237	Junction box with 2' pigtail. Daniel Woodhead with two (2) NEMA L5-20 110V 20A twist lock and two (2) NEMA 5-20 110V 20A duplex receptacles. Includes 2' pigtail wired direct with a male L5-20 plug. Shipped loose.	$1,432
7900-0240	Junction box Akron with two (2) 5-20 120v 20 Amp straight blade duplex receptacles and two (2) L5-20 120v 20 Amp twist lock receptacles. Each receptacle shall be equipped with individual 20A breakers, a spring-loaded snap cover and marked in white lettering with that receptacles voltage and ampere rating. All electrical receptacles, plugs and snap type weatherproof covers shall be UL Listed components. 12" Pigtail that includes wire mesh cord grip with a L14-20 connector. Ship loose.	$705
7900-0241	Miscellanous bag of screws, nuts, bolts and washers, as used in the construction of the unit. Quantity and type to be determined upon submitted order.	$113
7900-0242	Junction box Circle-D with four (4) 3-wire Nema 5-20 110Volt 20 Amp duplex household receptacles. Includes 3' pig tail with 20A TL connector.	$765
7900-0244	Removable Poly Speedlay Tray(s). The floor of the tray(s) to be slotted to prevent the accumulation of water and allow for ventilation of wet hose. Ship loose.	$566
7900-0245	Junction box Circle-D with three (3) L5-20 120v 20 Amp twist lock receptacles and one (1) 5-20 120v 20 Amp straight blade duplex receptacle. A Circle-D model PF51G four outlet electrical junction box shall be provided and shall have an integral pilot light to indicate electrical current. Each receptacle shall be equipped with individual 20A breakers. 12" Pigtail with a L14-20 4 wire connector. Ship loose.	$966
7900-0246	Removable aluminum speedlay tray(s)for 1.75" DJ hose. The floor of the tray(s) to be slotted to prevent the accumulation of water and allow for ventilation of wet hose. This is in addition to the standard speedlay trays and are to be shipped loose.	$618
7900-0247	Speedlay tray loose equipment - removable. Tray includes a 1.25" extruded alum handle low on each end of tray and slots down each side to facilitate lifting. The floor of the tray shall have poly slides and be slotted to prevent the accumulation of water and allow for ventilation of wet hose.	$617
7900-0250	TFT XFC 52 Package Crossfire Monitor, SAFE-TAK, Storage Bracket, MasterStream, Quad Stack Tips, Stream Straightener	$4,843
7900-0251	Foam 6% Chem Guard AFFF 5 gallon pail Mil Spec.	$138
7900-0253	Junction box Circle-D with (2) 3-wire NEMA L5-20 110V 20A twist lock receptacles and (2) 3-wire NEMA 5-20 110V 20A household receptacles. Includes 3' pig tail with 20A TL connector.	$765
7900-0255	Floodlight Whelen PFP2AC 110V powder coated black with external mount 50" tripod telepole. Requires 110V receptacle shipped loose.	$3,309

7900-0257	Soft Suction Hose 15ft 6" with 6" long handle female swivel coupler on one end and a 4.5" long handle female swivel coupler on the other end.	$1,321
7900-0258	Spotlight Optronics Blue Eye model KB4003 hand held. Ship loose.	$239
7900-0259	Removable aluminum speedlay tray(s)for 1.75" DJ hose. Tray includes a 1.25" extruded alum handle low on each end of tray and slots down each side to facilitate lifting. The floor of the tray shall have poly slides and be slotted to prevent the accumulation of water and allow for ventilation of wet hose. This is in addition to the standard speedlay trays and are to be shipped loose.	$617
7900-0260	Junction box Circle-D with (2) 15 amp straight blade and (2) 15 amp twist lock receptacles. Includes 3' pig tail with 20 amp twist lock connector.	$966
7900-0261	Shoreline extension cord 50' of 10/3 black. (1) end 30A NEMA 5-30P, (1) end 30A NEMA 5-30R.	$332
7900-0265	2100 Gallon Aluminum frame portable folding tank. FDTA 2100 H2 alum w/22 oz. sides and 32 oz. Ship with unit stored in storage tank rack. Color to be yellow.	$1,839
7900-0273	Junction box Circle-D with four (4) 3-wire NEMA L5-15 110 volt 15 amp twist lock receptacles. Includes 12" pig tail with 15A TL connector.	$765
7900-0274	Junction box Circle-D with (2) 20 amp straight blade and (2) 20 amp twist lock receptacles. Includes 12" pig tail with 20 amp Daniel Woodhead twist lock connector.	$966
7900-0275	TFT AB3ST-NX Intake Valve 6"NST x 5" Storz With Cap	$2,106
7950-0022	Front axle wheel trim kit. Includes stainless steel lug nut covers (chrome plated plastic if applicable) and center cap with E-ONE logo. Note: Center cap will have an inspection port IPO a logo if equipped with Stemco oil seals.	$256
7950-0023	Rear axle (single) wheel trim kit. Includes stainless steel lug nut covers (chrome plated plastic if applicable) and center cap with E-ONE logo. E-ONE custom chassis w/steel wheels will have chrome plated plastic lug covers.	$315
	PAINT, STRIPING, LETTERING	
8100-0065	Paint chassis frame rails, springs, cross-members, fire pump, drivelines, fuel and air tanks, axles, front bumper extensions with brackets and front suction piping (if applicable) shall be painted: [#COL].	$1,963
8100-0070	Paint valve ends job color.	$500
8100-0071	Undercoating E-ONE.	$306
8100-0072	Touch up paint, (1) pint. Dupont paint job color.	$97
8100-0073	Paint Commercial Cab Special - DuPont Paint	$5,238
8100-0076	Paint 2-Tone Special Commercial Chassis Cab - DuPont Paint	$2,609
8100-0084	All applicable pump/pre-connect application modules are to have a job color finish. Includes upper and lower pump modules, crosswalk module and/or speedlay/pre-connect module (as applicable). Rear mounted body/pump module to be painted job color.	$638
8100-0091	Paint entire front of body job color. Stainless steel bodies only.	$2,286
8100-0092	Paint entire rear of body job color. Stainless steel bodies only.	$2,286
8100-0096	Paint rear tow eye assemblies job color IPO black.	$290
8100-0097	Paint the pump job color.	$610
8100-0108	Front wheels to be painted on the inboard side (same color as outboard side).	$329
8100-0109	Rear wheels (4) to be painted on the inboard side (same color as outboard side). Includes outboard side of the inboard wheels.	$656
8100-0115	Paint valve ends 767681EG Black.	$500
8100-0117	Paint cab/body with approved metallic paint color.	$2,886
8100-0166	Painted stripe - 12" wide and straight on front, sides and rear of cab and body. Color: [#COL]. Location: [#LOC].	$4,699
8100-0168	All rearward facing access door(s) and pump//bleeder panel(s) to be painted job color.	$975
8100-0170	Painted Stripe - 6" wide with "Z". Stripe straight on front, sides and rear of cab and body. "Z" location to be specified by customer. Color: [#COL]. Location: [#LOC].	$4,699
8100-0171	Paint Commercial Cab Special - DuPont Paint: Color: [#COL].	$5,238
8100-0172	Paint body two tone color. Paint break will be just above door drip rail. DuPont paint. Color: [#COL].	$2,025
8100-0177	Paint cab Sikkens two-tone. Upper area of cab to be painted [#COL].	$1,316
8100-0178	Paint Commercial Cab Special - Sikkens Paint: Color: [#COL].	$5,035
8100-0180	Paint 2-Tone Special Commercial Chassis Cab - Sikkens Paint.	$2,609
8100-0181	Paint body two-tone color - Sikkens paint: Color: [#COL].	$2,025
8100-0182	Paint Body - Small - For Pumpers, Rear Mounts, S/A Tankers/Wetsides and Rescues. Sikkens paint. Color: [#COL].	$1,799
8100-0183	Paint Body - Large - For Aerials, T/A Tankers/Wetsides, Rear Mounts and Rescues. Sikkens paint. Color: [#COL].	$4,454
8100-0184	Paint body stainless steel -Small. Sikkens paint. Color: [#COL].	$5,470
8100-0191	International cab paint. Paint color [#COL].	$167
8100-0225	Paint the pump. Color: [#COL].	$610
8100-0227	Standard paint process for the exterior of stainless steel bodies. Sikkens paint. Color: [#COL].	$1,799
8100-0228	FRP painted exterior panels IPO standard paint process for stainless steel bodies. Available only on stainless steel pumper bodies that have roll-up doors. Provides a credit versus the standard painting process. Sikkens paint. Color: [#COL].	-$3,872
8100-0233	FRP painted exterior panels IPO standard paint process for stainless steel bodies. Available only on stainless steel rescue pumper bodies that have roll-up doors. Provides a credit versus the standard painting process. Sikkens paint. Color: [#COL].	-$3,872
8100-0361	Rear body surface to have a painted job color finish. Includes hinged doors that do not have discrete sales codes and removable panels.	$908
8100-0362	Paint body two tone color. Paint break will be just above the body compartment top. Sikkens paint. Color: [#COL].	$2,025
8100-0365	Paint tank - Large - For Wetside tankers products. Sikkens paint. Color: [#COL].	$4,576
8100-0368	FRP painted exterior panels IPO standard paint process for stainless steel bodies. Available only on stainless steel Wildland bodies with roll-up doors. Provides a credit versus the standard painting process. Sikkens paint. Color: [#COL].	-$3,064

8100-0369	FRP painted exterior panels IPO standard paint process for stainless steel bodies. Available only on stainless steel Wildland bodies that have hinged doors. Provides a credit versus the standard painting process. Sikkens paint. Color: [#COL].	-$2,501
8100-0372	Paint cab two-tone with approved metallic flake paint color.	$722
8100-0376	Side facing extrusions of pump module to have swirled finished.	$182
8100-0381	Paint 2-Tone Special Lower Section of Commercial Chassis Cab - Sikkens Paint. Color: [#COL].	$2,609
8100-0382	Interior of front bumper trays and running board suction trays to be painted with black Durabak. Includes driver side, officer side and center front bumper trays. Driver side and officer side running board suction trays.	$630
8100-0383	Paint Newton Dump job color.	$543
8100-0388	Chassis fuel tank to have undercoating applied prior to installation on frame.	$214
8100-0389	Standard paint process for the exterior of large stainless steel bodies. Sikkens paint. Color: [#COL].	$4,454
8100-0390	Paint Ford Cab at Outside Vendor - Sikkens Paint. Color: [#COL].	$5,033
8100-0394	Paint body two-tone color. Paint break will be just above the body compartment opening. Sikkens paint. Color: [#COL].	$2,025
8100-0398	Paint swivel chute job color.	$674
8100-0410	Black Durabak coating on pump master drain bracket.	$50
8100-0412	Zolatone finish gray in color for the upper pump module on the officer side where the E-ONE logo is mounted.	$195
8100-0418	Wheels to be painted job color.	$1,310
8100-0426	The driver and officer side roof top compartment interiors shall be painted Scorpion Black (smooth finish).	$609
8100-0428	FRP painted upper side sheet exterior panels IPO standard paint process for stainless steel bodies. Available only on stainless steel tanker bodies that have lower hinged doors and painted body. Provides a credit versus the standard painting process. Sikkens paint. Color: [#COL].	-$1,386
8100-0436	All applicable pump/pre-connect application modules are to have a job color finish. Paint the entire pump module inside and outside before loading onto the chassis.	$1,274
8100-0439	Painted crosswalk area to include all smooth plate and flat extruded surfaces exposed to the exterior forward and rearward of the crosswalk area.	$638
8100-0441	Paint 2-tone special upper section commercial chassis Cab - Sikkens Paint. Color: [#COL].	$2,609
8100-0448	FRP painted exterior panels IPO standard paint process for stainless steel bodies. Available only on stainless steel tanker bodies that have roll-up doors. Provides a credit versus the standard painting process. Sikkens paint. Color: [#COL].	-$5,079
8100-0449	Rear inboard wheels (2) to be painted on the outboard side (same color as outer wheels). Allowing for wheels to be rotated on the rear axle.	$328
8100-0457	Paint body two-tone color - Sikkens paint. Locate at the bottom of roll-up door header. Color: [#COL].	$2,025
8100-0458	Special paint break body two-tone color - Sikkens paint: Color: [#COL]. See sketch / drawing / photo in sales file.	$2,025
8100-0460	Paint pump module two tone inline with body.	$227
8100-0467	Paint chassis frame rails, springs, cross-members, fire pump, drivelines, air tanks, axles, front bumper extensions with brackets and front suction piping (if applicable) shall be painted: [#COL]. Does not include fuel tank.	$1,963
8100-0468	FRP painted exterior panels replacement set for stainless steel tanker bodies. Provides the standard painting process on the panels. Sikkens paint. Color: [#COL].	$2,475
8100-0472	Paint intake valve ends 767681EG Black. (DO NOT PAINT PLUGS & SWIVELS)	$250
8100-0476	Brackets painted Durabak black. Includes rear aerial style brackets, rear camera cover.	$182
8100-0479	SCBA doors on the rear body wheel well panels to be painted to match the body color.	$286
8100-0480	Upper panels rearward of upper module storage compartment to be aluminum smooth plate painted job color.	$252
8100-0481	Black Linex coating on top of the of standard diamond plate: Install on; Pump panel running boards, body compartment tops, enhanced extended compartment steps and rear tailboard.	$3,500
8100-0488	Paint rear tow eye assemblies yellow IPO black.	$290
8150-0012	The interior of the backboard storage compartment to be painted OTO gray. Includes inside surfaces of backboard doors and upper cover plate.	$638
8150-0021	The interior of the backboard storage compartment to be painted Zolatone gray. Includes inside surfaces of backboard doors and upper cover plate.	$638
8200-0000	Scotchlite Letter (Each) - 3". Color [#COL].	$10
8200-0001	Scotchlite Letter (Each) - 6". Color [#COL].	$12
8200-0002	Scotchlite Letter (Each) - 9". Color [#COL].	$13
8200-0003	Scotchlite Letter (Each) - 12". Color [#COL].	$13
8200-0004	Scotchlite Letter (Each) - 15". Color [#COL].	$15
8200-0005	Scotchlite Letter (Each) - 18". Color [#COL].	$17
8200-0006	Maltese cross 12" (Pair).	$1,180
8200-0007	Sign Gold Letter (Each) - 3".	$14
8200-0008	Sign Gold Letter (Each) - 6"	$20
8200-0009	Sign Gold Letter (Each) - 9"	$31
8200-0010	Sign Gold Letter (Each) - 12"	$31
8200-0011	Scotchlite Letters (60) - 3". Color [#COL].	$796
8200-0012	Sign Gold Letters (60) - 3".	$1,157
8200-0013	Shade for lettering.	$5
8200-0014	Sign "Stay Back 500FT" with black reflective lettering. Locate below rear of body.	$140
8200-0018	Scotchlite Letters (90) - 3". Color [#COL].	$993
8200-0019	Scotchlite Letters (120) - 3". Color [#COL].	$1,189
8200-0020	Sign Gold Letters (90) - 3".	$1,539
8200-0021	Sign Gold Letters (120) - 3".	$1,918
8200-0022	Shade and outline for lettering.	$6

8200-0024	Reflexite Letter (Each) - 18". [#COL] Reflexite letter(s) stitched to vinyl hosebed cover end flap.	$69
8200-0025	Reflexite Letter (Each) - 6". [#COL] Reflexite letter(s) stitched to vinyl hosebed cover end flap.	$39
8200-0026	Die cut letter in stripe (EA).	$26
8200-0027	Scotchlite Letter (Each) - 5". Color [#COL].	$12
8200-0028	Sign Gold Letter (Each) - 5"	$20
8200-0029	Scotchlite Letter (Each) - 10". Color [#COL].	$14
8200-0030	Sign Gold Letter (Each) - 10"	$31
8200-0031	Scotchlite Letter (Each) - 30". Color [#COL].	$21
8200-0032	Scotchlite letter each 24" [#COL].	$19
8200-0033	Scotchlite letter (each) - 8". Color [#COL].	$14
8200-0036	Scotchlite Letter (Each) - 4". Color [#COL].	$11
8200-0038	Reflexite Letter (Each) - 12". [#COL] Reflexite letter(s) stitched to vinyl hose bed cover end flap.	$55
8200-0039	Maltese Cross SignGold up to 18" dia (PR) with new layout.	$1,064
8200-0040	Gold leaf letters (90) - 3".	$3,841
8200-0044	Reflexite Letter (Each) - 8". [#COL] Reflexite letter(s) stitched to vinyl hosebed cover end flap.	$46
8200-0045	Gold leaf letters (120) - 3".	$4,470
8200-0046	Scotchlite Letter (Each) - 27". Color [#COL].	$20
8200-0047	Sign Gold Letter (Each) - 4"	$16
8200-0048	Sign Gold Letters (120) - 4".	$2,359
8200-0052	Sign Gold Letter (Each) - 8"	$31
8200-0061	Scotchlite Letter (Each) - 2". Color [#COL].	$8
8200-0070	Scotchlite Letter (Each) - 1.25". Color Black. To read: VIST OUR WEB SITE AT: WWW.PALMHARBORFD.COM	$7
8200-0072	Reflexite Letter (Each) - (6) 12" and (1) 14". Yellow Reflexite letter(s) stitched to vinyl hosebed cover end flap. The 12" letters to read "ENGINE" with 14" letter "1" split between "ENG" and "INE".	$56
8200-0073	Sign Gold Letter (Each) - 3". Sign Gold to be small turn style.	$17
8200-0074	Maltese Cross SignGold up to 15" dia (PR) with new layout.	$856
8200-0075	Reflexite Letter (Each) - 10". [#COL] Reflexite letter(s) stitched to vinyl hose bed cover end flap.	$50
8200-0079	Reflexite Letter (Each) - 4". White Reflexite letter(s) stitched to vinyl hosebed cover end flap. Lettering Instructions: ANCRAM 79-1	$34
8200-0081	Etched Vinyl Letter (Each) - 5"	$20
8200-0084	Scotchlite Letter (Each) - 1". Color [#COL].	$8
8200-0086	Sign Gold Letter (Each) - 16".	$37
8200-0088	Gold leaf letter (Each) - 4".	$71
8200-0089	Gold leaf letters (EA) - 3".	$44
8200-0090	Sign Silver Letter (Each) - 3"	$14
8200-0091	Sign Silver Letter (Each) - 12"	$31
8200-0098	Scotchlite letter each 20" [#COL].	$18
8200-0100	Sign Gold Letter (Each) - 2".	$14
8300-0002	NFPA Scotchlite Stripe - 4" wide and straight on front/sides of cab and sides/rear of body. Color: [#COL]. Location: [#LOC].	$760
8300-0003	NFPA Scotchlite Stripe - 6" wide and straight on front/sides of cab and sides/rear of body. Color: [#COL]. Location: [#LOC].	$768
8300-0006	NFPA Scotchlite Stripe - 6" wide with "Z". Stripe straight on front, sides and rear of cab and body. "Z" location to be specified by customer. Color: [#COL]. Location: [#LOC].	$1,215
8300-0008	NFPA Scotchlite Stripe - 5" wide with "S". Stripe straight on front, sides and rear of cab and body. "S" location to be specified by customer. Color: [#COL]. Location: [#LOC].	$1,356
8300-0009	NFPA Scotchlite Stripe - 5" wide with double "S". Stripe straight on front, sides and rear of cab and body. Double "S" locations to be specified by customer. Color: [#COL]. Location: [#LOC].	$1,659
8300-0011	Scotchlite stripe (PR) 1/2" located 1/2" above and below existing stripe. Color: [#COL].	$566
8300-0012	Scotchlite stripes (4) 1/2" located (2) above and (2) below existing stripe. Stripes to be spaced 1/2" apart. Color: [#COL].	$1,124
8300-0013	NFPA Scotchlite Stripe - 2" and 4" wide with "Z". Stripe straight on front, sides and rear of cab and body. "Z" location to be specified by customer. 2" above 4" with 1" gap between stripes. Color: [#COL]. Location: [#LOC].	$1,716
8300-0016	Paint Break Sign Gold Chassis Stripe - 3/4" Wide - Black, Gold, Black. To be located above existing paint break.	$266
8300-0018	Sign gold scroll for body door with shade (Ea). Location: [#LOC]	$187
8300-0019	Sign gold scroll for body door (Ea). Location: [#LOC]	$61
8300-0024	Red/White rubrail scotchlite insert.	$220
8300-0025	1/4" Pin stripe above and below existing Scotchlite stripe. Color: [#COL].	$906
8300-0026	Scotchlite stripe 1" located 1" above and below existing stripe. Color: [#COL].	$678
8300-0027	NFPA Scotchlite 4" wide hockey stripe, straight across front and may contour as it transitions from cab to body on each side. Color: [#COL]. Location: [#LOC].	$913
8300-0028	NFPA Scotchlite 6" wide hockey stripe, straight across front and may contour as it transitions from Cab to Body on each side. Color: [#COL]. Location: [#LOC].	$922
8300-0030	NFPA Scotchlite 10" wide hockey stripe, straight across front and may contour as it transitions from Cab to Body on each side. Color: [#COL]. Location: [#LOC].	$1,232
8300-0032	Chevron "A" style 4" Scotchlite striping on rear of body. Includes rear facing extrusions, panels and doors inboard/outboard of the beavertails(if applicable). Colors to be [#COL].	$3,588
8300-0033	NFPA Scotchlite Stripe - 8" wide and straight on front/sides of cab and sides/rear of body. Color: [#COL]. Location: [#LOC].	$949
8300-0034	Scotchlite stripe 2" located 1" above existing stripe. Color: [#COL].	$430
8300-0036	NFPA Scotchlite Stripe - 8" wide with "S". Stripe straight on front, sides and rear of cab and body. "S" location to be specified by customer. Color: [#COL]. Location: [#LOC].	$1,542
8300-0037	Chevron "V" style 4" Scotchlite striping on rear of body. Includes rear facing extrusions, panels and doors inboard/outboard of the beavertails(if applicable). Colors to be [#COL].	$3,588
8300-0038	Scotchlite stripe 2" located 1" above and below existing stripe. Color: [#COL].	$858

8300-0039	Scotchlite stripe 1" located .5" above and below existing stripe. Color: [#COL].	$716
8300-0044	Scotchlite stripe 1" located 1" above existing stripe. Color: [#COL].	$358
8300-0045	1/4" pinstripe. Color: [#COL]. Location: At cab paint break	$199
8300-0046	Scotchlite stripe (PR) 1/2" located directly above and below existing stripe. Color: [#COL].	$711
8300-0048	Paint break Scotchlite chassis stripe - 3/4" Wide - Black, [#COL], Black. To be located above existing paint break.	$160
8300-0050	Scotchlite stripe (PR) 1" located directly above and below existing stripe on satin roll-up doors only. Color: [#COL].	$566
8300-0052	Chevron "V" style Scotchlite striping on rear of body outboard of beavertails (if equipped). Colors to be [#COL].	$1,064
8300-0058	Chevron "V" style 4" Scotchlite striping on rear B1 compt door, (3) stripes. Colors to be red/white/black pinstripe.	$930
8300-0059	NFPA Scotchlite Stripe - 10" wide and straight on front, sides and rear of cab and body. Color: [#COL]. Location: [#LOC].	$1,251
8300-0061	Chevron "A" style 6" individual Scotchlite striping full width on rear of body. Includes rear facing extrusions, panels and doors. Colors to be [#COL].	$1,893
8300-0062	Chevron "A" style Scotchlite striping on rear of body outboard of beavertails (if equipped). Colors to be [#COL].	$1,064
8300-0066	NFPA Scotchlite Stripe - 4" wide with "Z". Stripe straight on front, sides and rear of cab and body. "Z" location to be specified by customer. Color: [#COL]. Location: [#LOC].	$1,205
8300-0067	Chevron "A" style 4" Scotchlite striping on rear of body outside of beavertails. Colors to be [#COL].	$1,482
8300-0070	Chevron "A" style 4" Scotchlite striping on rear of body between beavertails. Colors to be [#COL].	$2,042
8300-0072	NFPA Scotchlite Stripe - 10" wide with "Z". Stripe straight on front, sides and rear of cab and body. "Z" location to be specified by customer. Color: [#COL]. Location: [#LOC].	$2,075
8300-0076	Chevron "A" style 4" Scotchlite striping on rear of body between beavertails; body panels and extrusions only (No doors). Colors to be [#COL].	$1,142
8300-0077	Chevron "A" style Scotchlite striping on rear B1 compt door. Colors to be [#COL].	$1,797
8300-0078	Chevron "A" style 4" 3M "Diamond Grade" striping on rear of body. Includes rear facing extrusions, panels and doors inboard/outboard of the beavertails(if applicable). Colors to be [#COL].	$4,485
8300-0079	Chevron "A" style 4" 3M "Diamond Grade" striping on rear pump panel/bleeder panel(s). Colors to be [#COL].	$749
8300-0081	Chevron "A" style 3M "Diamond Grade" striping on rear of body outboard of beavertails (if equipped). Colors to be [#COL].	$1,331
8300-0084	Chevron "A" style 6" printed sheet Scotchlite striping full width on rear of body. Includes rear facing extrusions, panels and doors. Colors to be [#COL].	$1,477
8300-0085	Scotchlite stripe 1" located directly above and below existing stripe. Color: [#COL].	$678
8300-0088	NFPA Scotchlite Stripe - 4" wide and straight on sides and rear of body only. Color: [#COL]. Location: [#LOC].	$837
8300-0090	Scotchlite stripe 1.5" located directly above and below existing stripe. Color: [#COL].	$718
8300-0091	1/4" Scotchlite pinstripe above and below existing stripe. Color: [#COL].	$1,034
8300-0093	Chevron "A" style 6" printed sheet Scotchlite striping on front bumper. Colors to be [#COL].	$609
8300-0094	Chevron "A" style 4" Scotchlite striping on rear body panels only, no extrusions. Colors to be [#COL].	$2,692
8300-0099	Chevron "A" style 6" printed sheet Scotchlite striping on rear of body between beavertails. Colors to be [#COL].	$1,162
8300-0101	Black rubrail scotchlite insert.	$220
8300-0103	Chevron "A" style 6" Scotchlite striping on rear B1 compt door. Colors to be [#COL].	$1,797
8300-0104	Chevron "V" style 3" Scotchlite striping on rear of body. Colors to be Red/White/Blue.	$3,588
8300-0105	NFPA Scotchlite Stripe - 6" wide and straight on front, sides and rear of cab and body. Includes an "N" located L1/R1 compartment per photo on file. Color: [#COL]. Location: [#LOC].	$1,664
8300-0109	Chevron "A" style 6" 3M "Diamond Grade" striping on rear of body. Includes rear facing extrusions, panels and doors inboard/outboard of the beavertails(if applicable). Colors to be [#COL].	$4,485
8300-0111	Chevron "A" style 6" individual Scotchlite striping on rear of body except for the pump/ladder tunnel access door. Colors to be [#COL].	$3,588
8300-0112	Chevron "A" style 6" Scotchlite striping on rear facing side of the slide out room. Colors to be [#COL].	$1,797
8300-0114	Chevron "A" style 6" individual Scotchlite striping full width on rear of body. Includes rear facing compartment face, extrusions, panels and doors. Does not include center lower pump panel. Colors to be [#COL].	$1,893
8300-0115	Chevron "A" style 6" printed pattern Scotchlite striping full width on rear of body. Includes rear facing compartment face, extrusions, panels and doors. Does not include center lower pump panel. Colors to be [#COL].	$1,477
8300-0116	Chevron "A" style 6" printed pattern Scotchlite striping on the upper center pump/storage access. Colors to be [#COL].	$462
8300-0117	Chevron "A" style 6" individual Scotchlite striping on the upper center pump/storage access. Colors to be [#COL].	$634
8300-0125	Reflective [#COL] striping positioned in the "A" formation located in the lower door panel (EA). Location: [#LOC].	$74
8300-0126	Red/White scotchlite. Locate on front of roll-out tray(s), front lip of adjustable/fixed shelves and tool board(s) on outer vertical edge on both sides.	$442
8300-0142	Chevron "A" style 6" individual Scotchlite striping on front bumper. Colors to be [#COL].	$761
8300-0143	NFPA Scotchlite Stripe - three stripes 3" wide with "Z" with 1" gap between stripes. Stripe straight on front, sides and rear of cab and body. "Z" location to be specified by customer. Color: top stripe - Yellow, middle stripe - White, bottom stripe - Black. Location: top of bottom stripe flush with top of bumper and straight back.	$3,310

8300-0144	Chevron "A" style 6" 3M "Diamond Grade" striping on rear of body (does not include the B1 door). Includes rear facing extrusions, panels and doors inboard/outboard of the beavertails(if applicable). Colors to be [#COL].	$1,886
8300-0145	Chevron "A" style 6" 3M "Diamond Grade" striping on front bumper. Colors to be [#COL].	$901
8300-0146	Chevron "A" style 6" 3M "Diamond Grade" striping full width on rear of body. Includes rear facing extrusions, panels and doors. Colors to be [#COL].	$2,487
8300-0150	Chevron "A" style 6" printed sheet Scotchlite striping on rear of body. Includes rear facing extrusions, panels and doors inboard/outboard of the beavertails (if applicable). Colors to be [#COL].	$1,285
8300-0152	Chevron "A" style 6" 3M "Diamond Grade" Scotchlite striping full width on rear of body. Includes rear facing compartment face, extrusions, panels and doors. Does not include center lower pump panel. Colors to be [#COL].	$2,487
8300-0153	Chevron "A" style 6" 3M "Diamond Grade" Scotchlite striping on the upper center pump/storage access. Colors to be [#COL].	$786
8300-0155	NFPA Scotchlite Stripe - 4" wide with ribbon style "Z". Stripe straight on front, sides and rear of cab and body. "Z" location to be specified by customer. Color: [#COL]. Location: [#LOC].	$1,215
8300-0159	Red/Yellow scotchlite. Locate on front of roll-out tray(s), front lip of adjustable/fixed shelves and tool board(s) on outer vertical edge on both sides.	$442
8300-0160	Chevron "A" style 6" printed sheet Scotchlite striping on front and rear faces of overhead ladder rack. Colors to be [#COL].	$431
8300-0162	Scotchlite stripe 1" located 1" below existing stripe. Color: [#COL].	$358
8300-0165	Chevron "A" style 6" printed sheet Scotchlite striping on outer panel of beavertails. Colors to be [#COL].	$457
8300-0167	White Diamond Grade Scotchlite. Locate on front of roll-out tray(s), front lip of adjustable/fixed shelves and tool board(s) on outer vertical edge on both sides.	$442
8300-0169	NFPA Scotchlite Stripe - 6" wide with "Z". Stripe straight on front, sides and rear of cab and body. "Z" location to be specified by customer. Color: White on cab and body / Ruby Red on body doors. Location: bottom of stripe flush with top of bumper and straight back.	$1,215
8300-0172	Scotchlite Stripe Body. The side facing extrusions of the driver and officer side assemblies. Includes top, bottom and vertical extrusions (does not include rounded or front/rear facing surfaces of corner extrusions). Color: Lime Green (color to match FLNA6000 as applicable, final match will be based on material availability and customer sign-off).	$1,799
8300-0173	Chevron "A" style 6" Scotchlite striping on rear of Wildland body. Colors to be Yellow/Red.	$1,524
8300-0179	Chevron "A" style 6" printed sheet Scotchlite striping on rear of body. Includes rear facing extrusions, panels, inboard/outboard of the beavertails (if applicable). Does not include the rear door(s). Colors to be Yellow/Red.	$1,220
8300-0181	Paint Break Sign Gold Chassis Stripe - 3/4" Wide - Black, Gold, Black. Sign Gold to be small turn style. To be located above existing paint break.	$533
8300-0183	NFPA Scotchlite Stripe - 1"/1"/.25"/4"/.25"/1"/1" wide with "Z". Stripe straight on front, sides and rear of cab and body. "Z" location to be specified by customer. Lower portion of stripes will continue rearward after "Z". There will be a 1/4" gap between stripes. Color: Blue/White/Blue/White/Blue/White/Blue. Location: bottom of stripe flush with top of bumper and straight back.	$3,442
8300-0186	NFPA Scotchlite Stripe - 2" and 6" wide with "Z". Stripe straight on front, sides and rear of cab and body. "Z" location to be specified by customer. 2" above 6" with 1" gap between stripes. 6" stripe to have a .25" outline above and below. Color: [#COL]. Location: [#LOC].	$1,716
8300-0189	Scotchlite striping on front bumper 6". Color to be [#COL].	$761
8300-0190	Chevron "A" style 6" 3M "Diamond Grade" striping on rear of body (does not include the B1 door). Includes rear facing extrusions, panels and doors inboard/outboard of the beavertails(if applicable). Colors to be [#COL].	$1,886
8300-0192	NFPA Scotchlite Stripe - 8" and 3" wide with "Z". Stripe straight on front, sides and rear of cab and body. "Z" location to be specified by customer. 8" above 3" with 1.5" gap between stripes. Color: White. Location: Center of the 8" stripe centered with Quad bezel (in between upper and lower bezel) and straight back.	$2,255
8300-0193	Chevron "A" style 3M "Diamond Grade" Dots in 6" striping pattern on rear of body (does not include the B1 door). Includes rear facing extrusions, panels and doors inboard of the beavertails (if applicable). Colors to be [#COL].	$2,810
8300-0194	Install dealer supplied Scotchlite pinstripe above and below existing stripe. Color: Blue.	$555
8300-0195	Sign gold .75" stripe and scroll package. Total of (5) scrolls for body (1) in each upper forward corner of L1,R1,L3 and upper rearward corner of L2,R2 with connecting stripes, side dump panels to have rearward vertical stripe, the cab to have stripe contouring the wheel wells and around front of cab. All stripes to have red scotchlite pin stripe.	$3,708
8300-0197	Scotchlite stripe 1" located 1" down from top of stripe and 1" up from bottom of stripe (1"stripes on existing stripe). Color: [#COL].	$716
8300-0198	NFPA Scotchlite Stripe - 8" wide with "Z". Stripe straight on front, sides and rear of cab and body. "Z" location to be specified by customer. Color: [#COL]. Location: [#LOC].	$2,255
8300-0199	Sign Gold Body Stripe - 1" Wide - Black, Gold, Black, located .5" above and below existing stripe.	$1,341
8300-0200	Scotchlite stripe 2" located 2" below existing stripe. Color: [#COL].	$846
8300-0201	Chevron "A" style 6" 3M "Diamond Grade" striping on ladder rack lowering arms. The Chevron shall be applied to the rear and forward arm surfaces only. Colors to be [#COL].	$354
8300-0202	Sign Gold Stripe - 1" Wide - Black, Gold, Black. To be located above and below scotchlite stripe.	$1,893
8300-0205	NFPA Scotchlite Stripe - 4" wide with double ribbon. Double ribbon locations to be specified by customer. Color: [#COL]. Location: [#LOC].	$1,659
8300-0206	Red rubrail scotchlite insert.	$220
8300-0209	NFPA Scotchlite Stripe - 10" wide with pin striping above and below. Pin striping thickness and spacing shall be as specified in shop order and straight on front, sides and rear of cab and body. Color: [#COL]. Location: [#LOC].	$1,579

8300-0210	There will be reflective tape added to the front and both sides of all roll-out trays to aid in visibility. Tape will be [#COL] in color.	$1,130
8300-0214	Chevron "A" style 6" printed sheet Scotchlite striping stitched to vinyl hosebed cover end flap. Colors to be [#COL].	$457
8300-0216	Scotchlite 3" wide hockey stripe, straight across front and may contour as it transitions from cab to body on each side. Color: [#COL]. Location: [#LOC].	$913
8300-0217	NFPA Scotchlite Stripe - 1" and 6" wide with "Z". Stripe straight on front, sides and rear of cab and body. "Z" location to be specified by customer. 1" above 6" with 1" gap between stripes. 6" stripe to have a .25" outline above and below. Color: [#COL]. Location: [#LOC].	$1,716
8300-0219	Sign Gold Body Stripe - 3/4" Wide - Gold with single Black pin stripe. Located above and below existing stripe. Top to bottom black pin stripe, sign gold, existing stripe, sign gold, black pin stripe.	$1,196
8300-0220	Paint Break Sign Gold Chassis Stripe - 1" Wide - Black pin stripe, Sign Gold, Black pin stripe. To be located above existing paint break if so equipped or at the same approximate position (when there is not a paint break).	$711
8300-0221	Sign gold scroll (Ea). Scroll detail/definition shall be defined by sales administration and or shop order file. Location: [#LOC]	$61
8300-0222	NFPA Scotchlite Stripe - 1", 4" and 1" wide with "Z". Stripe straight on front, sides and rear of cab and body. "Z" location to be specified by customer. 1" above and below 4" with 1" gap between stripes. Color: [#COL]. Location: [#LOC].	$1,716
8300-0223	NFPA Scotchlite Stripe - 6" wide with double pin stripe top and bottom. "Z" Stripe straight on front, sides and rear of cab and body. "Z" location to be specified by customer. Stripe shall be a printed sheet laid out from top to bottom as 1/4" pin stripe, 1/8" gap (wide stripe color), 1/8" pin stripe, 6" wide stripe, 1/8" pin stripe, 1/8" gap (wide stripe color), 1/4" pin stripe. Color: [#COL]. Location: [#LOC].	$1,716
8300-0229	Scotchlite stripe 3" located 2" below existing stripe. Color: [#COL].	$894
8300-0230	Paint break painted on chassis stripe - 1/8" Wide - [#COL].To be located above existing paint break if so equipped or at the same approximate position (when there is not a paint break).	$1,204
8300-0232	NFPA Scotchlite Stripe - 2" and 4" wide with interlocking "Z". Stripe straight on front, sides and rear of cab and body. "Z" location to be specified by customer. 2" above 4" with 1" gap between stripes. Color: [#COL]. Location: [#LOC].	$1,716
8300-0233	NFPA Scotchlite Stripe - 1", 4" and 1" wide with triple interlocking "Z". Stripe straight on front, sides and rear of cab and body. "Z" location to be specified by customer. 1" above and below 4" with 1" gap between stripes. Color: [#COL]. Location: [#LOC].	$2,510
8300-0234	NFPA Scotchlite Stripe - 2" wide with "Heartbeat". Stripe straight on front, sides and rear of cab and body. "heartbeat" location to be specified by customer. Color: [#COL]. Location: [#LOC].	$1,205
8300-0240	Installation of a customer supplied stripe 16" in width shall be installed. The 16" stripe material shall be supplied by the customer Spectra Red in color and shall be reviewed by the Graphics personnel prior to order entry. The stripe shall align on the cab face as specified by customer and go straight back.	$1,750
8300-0245	5/16" Pin stripe above and below existing Scotchlite stripe. Color: [#COL].	$906
8300-0246	Yellow M 983-71 rubrail scotchlite insert.	$491
8300-0247	NFPA Scotchlite Stripe - 8" wide with overlaid striping. Overlaid striping width and spacing shall be as specified in shop order and straight on front, sides and rear of cab and body. Color: [#COL]. Location: [#LOC].	$1,579
8300-0248	Chevron "A" style 6" printed sheet Scotchlite striping on entire rear of body. Includes rear facing extrusions, panels, doors and rear driver and officer compartment face. Colors to be [#COL].	$1,920
8300-0251	Scotchlite stripe 3" located 1" below existing stripe. Color: [#COL].	$894
8300-0252	NFPA Scotchlite hockey stripe. The stripe shall be 4"wide with a 3/4" gap above with a 2" wide stripe. The hockey stripe shall go straight across front and may contour as it transitions from cab to body on each side. Color: [#COL]. Location: [#LOC].	$1,010
8300-0254	Sign gold scroll (2) at front cab corners below windshield with connecting .75" sign gold chassis stripe between scrolls and down to trim.	$361
8300-0258	Chevron "A" style 6" Blue 3M Scotchlite and Fluorescent Yellow Green 3M "Diamond Grade" striping on rear of body. Includes rear facing extrusions, panels and doors inboard/outboard of the beavertails (if applicable).	$2,487
8300-0259	Chevron "A" style 3M Diamond Grade striping in rubrail. Colors to be: [#COL]	$697
8300-0264	Paint break Scotchlite chassis stripe - 1" Wide - Red, [#COL], Red. To be located above existing paint break.	$201
8300-0265	NFPA Scotchlite Stripe - 6" wide with "Z". Stripe straight on front, sides and rear of cab and body. "Z" location to be specified by customer. Color: White on cab and body / Ruby Red on body doors. Location: bottom of stripe flush with bottom of cab and straight back.	$1,215
8300-0266	Sign Gold Stripe - 1/2" Wide. To be located above and below scotchlite stripe.	$1,423
8300-0267	NFPA Scotchlite Stripe - 9.5" wide and straight on front, sides and rear of cab and body. Color: [#COL]. Location: [#LOC].	$1,251
8300-0270	Sign Gold Stripe - 1" Wide - Black, Gold, Black. To be located 1" above and below scotchlite stripe.	$1,568
8300-0271	Chevron "A" style 6" 3M "Diamond Grade" striping on interior of front bumper lid. Colors to be [#COL].	$901
8300-0272	NFPA Scotchlite Stripe - 2" and 4" wide with interlocking hockey. Stripe straight on front, sides and rear of cab and body. Hockey location to be specified by customer. 2" above 4" with 1" gap between stripes. Color: [#COL]. Location: [#LOC].	$1,716
8300-0273	Chevron "A" style 6" Reflexite V98 striping on front bumper. Colors to be [#COL].	$797
8300-0274	Chevron "A" style 6" Reflexite V98 striping full width on rear of body. Includes rear facing extrusions, panels and doors. Colors to be [#COL].	$2,114
8300-0275	Chevron "A" style 6" Reflexite V98 striping full width on rear of body. Includes rear facing compartment face, extrusions, panels and doors. Does not include center lower pump panel. Colors to be [#COL].	$2,114

8300-0279	Stripe cab lock bar. Color: White.	$78
8300-0286	Chevron "A" style 6" Reflexite V98 striping full width on rear of body (does not include the B1 door and/or center aerial ladder tunnel door). Includes rear facing extrusions, panels and doors. Colors to be [#COL].	$1,912
8300-0289	Paint Break Sign Gold Chassis Stripe - 3/4" Wide - Black, Gold, Black. To be located at the same approximate position as a paint break with dip to grille.	$266
8300-0291	Scotchlite stripe 1" located 2" above and below existing stripe. Color: [#COL].	$678
8300-0292	Chevron "A" style 6" Reflexite V98 striping on rear of body. Includes rear facing extrusions, panels and doors inboard of beavertails (if equipped). Does not include rear facing outboard compartment faces. Colors to be [#COL].	$1,906
8400-0004	Install customer supplied logos on front cab doors.	$207
8400-0005	A pair of customer logos for cab supplied to E-One in a digital format.	$895
8400-0008	Star of life logo 12". Location: [#LOC].	$104
8400-0009	American Flag (EA). Approx size: 7"H x 14"W. Location: [#LOC]	$119
8400-0010	Install customer logo from an existing E-ONE design (EA). Location: [#LOC]	$128
8400-0012	Star of life logo 22.5". Location: [#LOC]	$206
8400-0013	Signgold Fleur de Lis 5" logo (PR) with black outline. Location: [#LOC].	$206
8400-0017	A customer logo supplied to E-ONE in a digital format. Location: [#LOC].	$316
8400-0018	Star of life logo 20". Location: (1) each side centered on capony window.	$347
8400-0021	Label "NO SMOKING" with universal symbol 2"x6"; white background with red letters. Location: [#LOC].	$40
8400-0023	Install customer supplied logo. Location: [#LOC].	$72
8400-0024	Install up to 12" SignGold customer logo from an existing E-ONE design (EA). Location: [#LOC].	$191
8400-0025	A customer SignGold logo (up to 12") supplied to E-ONE in a digital format. Location: [#LOC].	$402
8400-0029	Reflective American Flag (PR) - wavy. Approx size: 12"H x 18"W. Location: [#LOC].	$237
8400-0032	Install dealer/customer supplied Leo's gold-Smart Silver #1: lettering, logos and body stripes/scolls.	$2,216
8400-0036	Star of life logo 20" (PR). Location: (1) each side centered between cab doors.	$347
8400-0039	Star of life logo 12" with black outline. Location: [#LOC].	$104
8400-0041	Vision flag on rear commercial cab window.	$382
8400-0049	American Flag (EA). Approx size: 16"H x 27"W. Location: Portable tank at rear and driver side of body.	$354
9100	**WARRANTIES, MANUALS, DRAWINGS**	
9100-0054	15 Year/100,000 Mile Structural Warranty - Statement of Warranty.	$5,525
9100-0055	15 Year Stainless Steel Plumbing Warranty - Statement of Warranty.	$2,527
9100-0056	15 Year Limited Paint and Perforation Warranty - For Sikkens Paint.	$12,628
9100-0058	12 Year body non-pro-rated paint and perforation warranty, 10 year cab non-pro-rated paint and perforation warranty - For Sikkens Paint.	$11,415
9100-0063	Extended 5 Year Warranty backed by Ford. Coverage is for 60 months or 150,000 miles or 6,000 engine hours with a $100.00 deductable	$4,168
9100-0066	Standard extended 3 year warranty body only.	$3,622
9100-0068	10 Year non prorated body paint warranty. For pumper, single axle tanker and single axle rescue products with aluminum body and pan doors.	$12,337
9100-0069	10 Year non prorated body paint warranty. For pumper, single axle tanker and single axle rescue products with aluminum body and all roll-up doors. (Painted roll-up doors covered under seperate warranty)	$9,932
9100-0070	10 Year non prorated body paint warranty. For aerials, tandem axle tanker and tandem axle rescue products with aluminum body and pan doors.	$15,188
9100-0071	10 Year non prorated body paint warranty. For aerials, tandem axle tanker and tandem axle rescue products with aluminum body and all roll-up doors. (Painted roll-up doors covered under seperate warranty)	$12,700
9100-0072	10 Year non prorated body paint warranty. For pumper, single axle tanker and single axle rescue products with stainless steel body and pan doors.	$6,385
9100-0074	10 Year non prorated body paint warranty. For aerials, tandem axle tanker and tandem axle rescue products with stainless steel body and pan doors.	$9,578
9300-0003	Waterous Compressed Air Foam System training.	$3,670
9300-0009	Manuals, Operator and Service CD-ROM.	$379
9300-0012	Pump panel approval drawings.	$439
9300-0017	Manuals Printed (Set).	$989
9300-0018	Manuals, Operator and Service CD-ROM (additional set).	$56
9300-0041	As built plumbing drawings.	$3,313

Notes:

1) Availability of options are limited by other options selected, and not all options are available in every chassis/apparatus configuration. Selection of an option may require several of the above parts/items to complete the option package.

2) Certain options, alone or in combination with other options, may require heavier axle/suspension packages, longer frames, or reinforced frames at additional cost.

3) To configure options, the E-One State Term Schedule authorized dealer will use quote configuration software to select the components necessary to effect the option, feature, or configuration requested and quote the total apparatus price.

Fire Apparatus Quotation for:
STATE OF OHIO TERM SCHEDULE

Quotation Number: 57485 Rev: 23

Unit Description: PMPR-TYPH

Quote Description: Pumper, Typhoon

Salescode	Extended Description	Qty
TESTING COMPLIANCE STANDARD		
1001-0015	The E-ONE supplied components of the vehicle shall meet the requirements of NFPA 1901, 2009 edition.	1
BUMPERS		
1160-0000	Bumper 10" stainless steel.	1
1160-0011	4" Front Bumper Extension.	1
FRAME ASSEMBLY		
1250-0003	Frame 10.25 x 3.5 x .375 chassis.	1
AXLE OPTIONS		
1025-0004	Meritor FL941 front axle 18,000 lb.	1
1025-0016	Meritor RS-24-160 single rear axle 24,000 lb. capacity.	1
1025-0029	Front shock absorbers.	1
SUSPENSIONS		
1070-0001	Rear suspension springs rated equal to the capacity of the axle.	1
WHEEL OPTIONS		
1050-0000	Steel wheels for front axle (2).	1
1050-0002	Steel wheels for rear axle (4).	1
1050-0007	Front axle wheel trim kit. Includes stainless steel lug nut covers (chrome plated plastic if applicable) and center cap with E-ONE logo. Note: Center cap will have an inspection port IPO a logo if equipped with Stemco oil seals.	1
1050-0008	Rear axle (single) wheel trim kit. Includes stainless steel lug nut covers (chrome plated plastic if applicable) and center cap with E-ONE logo. E-ONE custom chassis w/steel wheels will have chrome plated plastic lug covers.	1
TIRE OPTIONS		
1060-0001	Two Michelin 315 tires model XZA-1 for front axle.	1

1060-0015	Four Michelin 11R rear tires with XDN2 mud and snow tread.	1
1060-0117	RWC AirGuard LED tire pressure monitoring valve stem caps (6) for single rear axle applications.	1
BRAKE SYSTEMS		
1100-0000	16-1/2" x 6" S-cam brakes with ArvinMeritor automatic slack adjusters for front axle.	1
1100-0002	ArvinMeritor 16-1/2" x 7" S-cam brakes with cast brake drums for a single rear axle.	1
1100-0005	Brake system air 4X2/4X4.	1
1100-0006	Parking brake release mounted on the driver's side lower dash.	1
AIR SYSTEM OPTIONS		
1110-0000-001	Inlet for air system. Location: driver door jamb.	1
1110-0002	Air dryer Bendix AD-9.	1
1110-0006	Air lines nylon.	1
1110-0041	Air horns Grover recessed in bumper (PR).	1
ENGINES & TRANSMISSIONS		
1200-0017	Push-button transmission shift selector.	1
1200-0020	TransSynd synthetic transmission fluid for EVS3000.	1
1200-0097	Electronic limiting of speed to 68 MPH maximum. Note: Max speed may be set at 65 MPH due to tire rating.	1
1200-0234	Eng/Trans Cummins ISL 350HP/EVS3000 2013 EPA compliant engine.	1
SECONDARY BRAKING		
1125-0002	Jacobs engine compression brake.	1
1125-0023	Transmission to seek second gear when Jacobs engine brake or Telma retarder is engaged. N/A with Trans retarder.	1
COOLING PACKAGE		
1800-0013	Cooling system for use with Cyclone II X, Typhoon X, and Quest chassis. For use with 2010/2013 EPA engines. Includes coolant recovery system.	1
FUEL SYSTEMS		
1350-0003	Fuel system 50 gallon.	1
1350-0012-670	Fuel shut-off valve. Location: one (1) inlet side of OEM fuel filter.	1
1350-0022	Fuel line hose rubber.	1
ALTERNATOR		
1700-0003	Alternator Leece Neville 270 amp SAE, 240 amp NFPA rating.	1
BATTERIES		
1400-0002	Battery four group 31 1000 CCA.	1

CHASSIS OPTIONS		
1680-0005	Thermatic fan clutch.	1
1680-0006	Drivelines 1710.	1
1680-0011	Tow eyes rear below body, painted.	1
1680-0042	Tow hooks front painted in the down position.	1
1680-0250-M58	Diesel Exhaust Fluid (DEF) 5 gallon tank for 2013 EPA engines. Location: left side below rear of cab.	1
1680-0284	Radiator mounted power steering cooler.	1
CAB MODEL		
1520-0013	Typhoon X medium cab with 58" CA	1
CAB ROOF TYPE		
1615-0010	Cab roof to be "flat" (non-vista).	1
CAB BADGE PACKAGE		
1610-0000	Cab and body to have applicable E-ONE logos.	1
GRILLE		
1620-0004	ABS chrome plated grille.	1
CAB DOOR OPTIONS		
1550-0003	Rear crew cab doors in the medium position.	1
1550-0005	Driver and officer cab door windows. Include forward vent windows.	1
1550-0011	Rear crew cab door windows. Includes manual roll-down actuation. Not available on Typhoon or CII with paddle style door latching.	1
1550-0016	Cab door panels ABS.	1
1550-0025	All cab doors shall have "L" style exterior latches.	1
1550-0027	Front cab door windows to have manual actuation.	1
1550-0038-659	(4) LED cab step area lighting. Locate each light on each cab door in the inboard position. Lights to be switched with door ajar.	1
1550-0044	All cab door kick plates to be made from diamond plate aluminum.	1
1550-0059-000-G6	Reflective Red/Lemon Yellow printed striping positioned in the "A" formation located on the cab door panels.	1
1550-0077	Interior cab door locks - manual. Will have manual actuation from each respective door. Includes barrel style key lock on each exterior cab door.	1
1550-0084	All cab exterior access doors to have 1250 keyed locks.	1
MIRRORS		
1670-0003	Velvac 2010 mirrors. Door mounted west coast style with remote control and heat.	1

MISC EXTERIOR CAB OPTIONS

1550-0020	Windows cab side fixed driver's side.	1
1550-0033	Windows cab side fixed officer's side.	1
1675-0022	Pair of 18" handrails located just behind driver and officer front door one each side.	1
1675-0023	Pair of 18" handrails located just behind driver and officer rear door (ALS doors if equipped) one each side.	1
1675-0030	Mud flaps, front, black with E-ONE logo.	1
1675-0047	Rear cab wall to be 3/16" aluminum diamond plate.	1
1675-0202	Mounting plate for battery charger receptacle, indicator and air inlet (if applicable). Plate to be removable brushed stainless steel.	1
HVAC		
1515-0017	Air conditioning for the Typhoon X, CII X and Quest with Cummins ISC/ISL engine and radiator mounted condenser.	1
1515-0053	Controls for heating and air conditioning shall be located in the center dash area. (Lower area on Typhoon and CII with severe duty dash)	1
SEATS		
1510-0003	Seats, Inc. brand 911 cab seats.	1
1510-0008	Seat color gray.	1
1510-0035-147	Universal air pack bottle bracket (EA). Location: officer's seat.	1
1510-0035-148	Universal air pack bottle bracket (EA). Location: rear facing driver's side.	1
1510-0035-215	Universal air pack bottle bracket (EA). Location: rear facing officer's side.	1
1510-0038	Driver seat 911 air ride.	1
1510-0042	Officer seat to be 911 fixed SCBA.	1
1510-0050	Rear facing 911 seat with SCBA driver's side.	1
1510-0053	Rear facing 911 seat with SCBA officer's side.	1
1510-0234	Seat cover material Turnout Tuff.	1
1685-0031	Seating capacity tag of four occupants.	1
MISC INTERIOR CAB OPTIONS		
1685-0000	Cab interior gray. Does not include engine cover or seat color.	1
1685-0005	Lexan sun visors, driver and officer's side overhead.	1
1685-0168	ABS Dash package. Includes center and officer side dash, lower kick panels and "A" post covers.	1
1685-0187	Severe duty engine cover, molded polyurethane.	1
CAB ELECTRICAL OPTIONS		
1750-0013-172	Turn signal Whelen 600 LED amber arrow pair located upper headlight bezel.	1
1750-0024-179-04	Auto-Eject receptacle inlet 20 amp located outside driver's door next to handrail with a Yellow cover.	1
1750-0029	Switch horn button two position DOT/air horn.	1

1750-0046-195	Cab Headlights. Position: lower.	1
1750-0072-593	12 VDC (or 24VDC) electrical outlet in the cab wired battery hot. Location: officer side dash.	2
1750-0075	English dominant main cab gauge cluster.	1
1750-0158	Dome Lts Red/White LED. Package includes two lights mounted in the front and two mounted in the rear of the cab. White light wired through door and light assembly switch. Red light through light assembly switch.	1
1750-0188	DPF regeneration override switch.	1
1750-0198-A31	Battery charger to be located behind driver's seat.	1
1750-0343	Battery charger E-ONE LPC 20. 120 volt inlet, 20 amp output.	1
1750-0435	Halogen cab headlights. TyphoonX, CIIX and QST2 only.	1
BODY COMPT LEFT SIDE		
3100-0095	Driver side body with full height 36" wide forward and 36" wide rearward compartmentation. Includes (1) 56" wide compartment over the wheel well.	1
BODY COMPT RIGHT SIDE		
3120-0004	Officer half side body with 36" wide forward and 36" wide rearward compartmentation. Includes adjustable ladder tracks.	1
BODY COMPT REAR		
3110-0005	Full Height Rear Compartment. Includes smooth plate panels.	1
3110-0034	Upper rear compartment depth to be shallow.	1
3340-0115	Bolt-on diamond plate 16" tailboard (full width of body). Includes (2) squared off beavertails (no stanchions) with removable outer panels and handrails- (2) vertical on trailing edge of body and horizontal mounted handrail(s) below hosebed.	1
DOORS		
3300-0017-004	Door roll up short (up to 45") with satin finish ROM. Location(s): L2.	1
3300-0017-015	Door roll up short (up to 45") with satin finish ROM. Location(s): R1.	1
3300-0017-016	Door roll up short (up to 45") with satin finish ROM. Location(s): R2.	1
3300-0019-003	Door roll up tall (greater than 45") with satin finish ROM. Location(s): L1.	1
3300-0019-005	Door roll up tall (greater than 45") with satin finish ROM. Location(s): L3.	1
3300-0019-027	Door roll up tall (greater than 45") with satin finish ROM. Location(s): B1.	1
SHELVES		
3370-0025-099	Permanent shelf. Locate in L1 at offset (above extrusion if applicable).	1
3370-0025-100	Permanent shelf. Locate in L3 at offset (above extrusion if applicable).	1
3370-0052-I41	Adjustable shelf (J-Style) for non-transverse compartments 16" or greater in depth. Location: B1 lower.	1
3370-0054-I41	Tracks for adjustable shelf and/or adjustable tray in compartments 16" or greater in depth. Location: B1 lower.	1
COVERS		

3305-0007-000-02	Vinyl Red hose bed cover with attached rear flap(s).	1
3305-0008-000-02	Vinyl Red crosslay cover with attached side flaps.	1
PUMP MODULE		
3130-0167	Pump module to be 76" wide (side to side). Includes upper, lower, crosswalk, speedlay and tranverse module(s) if applicable.	1
3130-0523	Side mount pump module. Extruded aluminum with runningboards.	1
3130-0532	Pump panel opening is 39" wide. Pumper / tanker only.	1
3130-0539	Pump module height is 75". Pumper / tanker only.	1
PUMP PANELS		
3134-0016	Stainless steel driver and officer side pump panels.	1
3134-0064	The gauge panel(s) on the driver side of the Side Mount module to be hinged upward. Panel(s) to include (2) mechanical/pneumatic (as applicable to panel size) hold opens and latches.	1
3134-0143	Officer side pump panel to be vertical hinged on forward extrusion. Panel to be (3) pieces with upper (2) panels secured in the closed position with push button latches. Upper panel to be held open with gas shock.	1
MISC PUMP PANEL OPTIONS		
4460-0003	Pump panel tags color coded per NFPA compliance.	1
PUMP MODULE OPTIONS		
3136-0058	E-ONE logo mounted one each side on pump module/preconnect panels. Logos to be sized as applicable to available space on panels.	1
3136-0138	Pump module storage pan.	1
3136-0141	Crosslay double 4.25" wide single stack to hold up to 200' of 2.0" DJ (each).	1
WATER TANK		
4010-0099	Fill tower(s) to be located offset to officer side of water tank.	1
4010-0174	530 Gallon "T" Water Tank. UPF Poly III color fill towers. Note: Any foam cell(s) will reduce the overall water capacity.	1
TANK PLUMBING		
4450-0010	2" tank fill Akron manual valve.	1
4450-0119	3" tank to pump Akron manual valve w/4" tank connection.	1
LADDER STORAGE / RACKS		
3365-0025-515	Attic ladder mounting brackets (PR). Locate officer side compartment top.	1
3365-0028	Hard Suction Storage Rack. Driver side compartment top. Includes spring hold downs and scuff plates behind spring mounts (as applicable).	1
3365-0031	Hard Suction Storage Rack. Officer side in adjustable track above ladders (if applicable). Includes spring hold downs and scuff plates.	1
3365-0034-515	(2) aluminum pike pole storage tubes. Locate officer side compartment top.	1

3365-0049	Brand of ladders capable of being carried on unit to be Alco-Lite.	1
3365-0086-B99	The pike pole(s) capable of being stored are to be the following length: (2) 10' pike poles.	1
3365-0087-C57	The length of ladders capable of being stored shall be the following: 24' 2-section and 14' roof ladder.	1
3365-0168	Pike pole tube secondary retaining pin(s) with cable. Locate on end of pike pole tube(s).	1
HANDRAILS / STEPS		
3330-0103	Dual lighted LED folding steps rear NFPA. Includes folding steps on driver side (staggered stepped as applicable with tailboard depth) for NFPA hosebed access and handrail mounted on driver side upper hosebed side (as applicable).	1
3330-0105-060	Dual lighted LED folding step. Location: officer side front compartment face. Each location requires a minimum of (1) handrail per NFPA.	1
3330-0105-062	Dual lighted LED folding step. Location: driver side front compartment face. Each location requires a minimum of (1) handrail per NFPA.	3
MISC BODY OPTIONS		
3090-0002	OAH. Unit has no overall height restrictions.	1
3090-0004	OAL. Unit has no overall length restrictions.	1
3090-0007	The hose bed is to have NFPA capacity.	1
3340-0004	Hosebed above the booster tank. Includes forward hosebed and tower(s) cover plate work (as applicable). Hosebed adjustable divider extrusion rearward of the furthest tower is to run full width of the hosebed (as is practical with other hosebed mounted equipment).	1
3340-0015	Diamond plate single axle wheel well. Includes bolt-on composite wheel well liners and aluminum trim fenderettes.	1
3340-0035	Divider Long. To run full length of hose bed (front to rear).	1
3340-0058	Recessed fuel fill driver side wheel well.	1
3340-0074	Body mainframe and hosebed side assemblies for a 85" high body.	1
3340-0093	Mud flaps, rear, black with E-ONE logo.	1
3340-0110	The rear of each hose bed divider to have a hand hold cut-out(s).	1
3340-0128	Bolt-in partition walls. Locate in lower rear compartment transverse area. Partitions to separate the side rear compartments from the rear compartment.	1
3340-0145	Rub rail for the body and pump area module(s).	1
3340-0681	Body mainframe layout line to be 24". Includes body and all applicable modules.	1
SCBA BOTTLE STORAGE		
3320-0020	SCBA Bottle Storage. (4) Fire Shopp SCBA bottle storage with hinged doors with push button latches. (2) officer side and (2) driver side in wheel well area.	1
3320-0100	Strap(s), loop style to retain SCBA bottle(s). Locate one per bottle in each exterior storage compartment.	4

PUMPS		
4005-0013	Hale QFLO 750-1250 GPM pump, single stage.	1
4005-0030	Rating 1250 GPM	1
PUMP CERTIFICATION		
4475-0000	Pump certification 750-2250 GPM	1
PUMP OPTIONS		
4015-0008	Zinc anodes for Hale pump (PR), (1) discharge side and (1) intake side.	1
4015-0052-198	Steamers to be Flush. Location: driver's side.	1
4015-0052-199	Steamers to be Flush. Location: officer's side.	1
4015-0098	Manual operated master pump drain. The master drain shall be clearly marked and placed in accessible location on pump panel.	1
4015-0210	Pump cooler with Innovative Control 1/4 turn valve with "T" handle and label.	1
INTAKES		
4440-0005	2.5" Left Intake Akron Manual Valve.	1
INTAKE OPTIONS		
4445-0016	Intake relief valve, Hale 2.5".	1
DISCHARGES AND PRECONNECTS		
4415-0012-654	1.5" crosslay with Akron manual valve. Location: crosslay 1 & 2.	2
4415-0014-581	2.5" Left Pump Panel Discharge Akron Manual Valve. Location: left side discharge 1.	1
4415-0014-582	2.5" Left Pump Panel Discharge Akron Manual Valve. Location: left side discharge 2.	1
4415-0022-350	2.5" Left Rear Discharge Akron Manual Valve. Location: left rear discharge.	1
4415-0041	3" Deck Gun Discharge, Akron manual valve.	1
4415-0054-583	4" Right Pump Panel Discharge with 3" Akron Manual Valve (Waterous pumps noted location to be forward lower port). Location: right side discharge 1.	1
4417-0106-L65	Deck gun piping to be positioned centered in deck gun channel.	1
DISCHARGE OPTIONS		
4417-0175	Innovative Controls push/pull valve controls with locking T handles.	1
4417-0176	Innovative Controls 3/4" bleeder/drain valve include lift lever with ergonomic grip.	7
4417-0185	Innovative Controls discharge and intake bezels with integral color code and verbiage for side mount pump panel.	1
PRESSURE GOVERNORS		
4465-0011	Class 1 TPG pressure governor. Includes, water, oil, volt and tachometer.	1
GAUGES		

4435-0083	Innovative Controls 10 LED SL series water tank level gauge. On pump panel.	1
4435-0246	2.5" Innovative Controls stainless steel case pressure gauge (0-400) with color code bezel.	7
4435-0247	4" Innovative Controls stainless steel case master pressure gauges with bezel. Intake 30-0-400, and discharge 0-400.	1
ELECTRICAL SYSTEMS		
5010-0013-Y83	Vehicle data recorder - 2009 NFPA compliant. Includes occupant detection with display. Display location: inboard on driver's side overhead console.	1
5010-0036	V-MUX Electrical system for pumper / tanker / rescue.	1
5010-0059-339	VFD Text display for V-MUX electrical system. Location: center of dash.	1
LIGHT BARS		
5300-0055	Light bar Whelen Freedom model FN72QLED 72" LED with MKEZ7 mounts and clear lenses. Location: Centered on the front cab roof.	1
WARNING LIGHT PACKAGES		
5550-0059-535	Whelen Super LED lower level warning light package. Includes (8) red 600 LED light heads and (2) red 500 LED light heads w/chrome flanges. Locate side facing lights: at forward most position, centered in rear wheel well, and side facing at rear of body in rubrail if equipped.	1
WARNING LIGHTS		
5600-0078-479-06	Whelen Super LED beacon (PR) model L31H with Red domes. Location rear upper body on aerial style brackets.	1
5600-0105-170	Hazard (door ajar) light 2" LED. Location: center overhead.	1
SIRENS		
5500-0015	Whelen model 295SLSA1 siren with microphone (replaced 295HFSA1).	1
5500-0024-170	The electronic siren control is to be located on the center overhead.	1
SPEAKERS		
5510-0029-209	Speaker, Federal Signal Dynamax ES100 with "E-ONE" grille through bumper. Location: driver side front bumper.	1
DOT LIGHTING		
5150-0007	Whelen 600 series LED vertical mount tail lights. Includes LED stop/tail, arrow turn and halogen back-up lights with vertical Cast 3 housing and weatherproof connectors.	1
5150-0017	License plate light LED with chrome housing located at the rear of the body.	1
5150-0025	Marker light LED body/cab package. E-One custom cab and pumper or tanker body only.	1
5150-0032	Bracket license plate at rear of body.	1
LIGHTS - COMPARTMENT, STEP & GROUND		
5380-0189	Compartment light package Amdor Luma-Bar LED for small bodies. Includes one light	1

	per compartment (two if transverse).	
5380-0200	Ground light package EON LED - small.	1
LIGHTS - DECK AND SCENE		
5390-0058-395	Deck Lights - Truck-Lite LED model 81380 (PR). Location: rear body/beavertail area on the trailing edge up high.	1
5390-0076	Hose bed light Truck-Lite LED model 81380. Locate at front of hose bed. Switched with work light switch in cab.	1
5390-0102	Crosslay light Truck-Lite LED model 81380. Locate to rear of crosslay (SM) and forward of crosslay (TM as applicable). Switched with work light switch in cab.	1
LIGHTS - NON-WARNING		
5400-0003	Engine compartment light (EA).	1
5400-0010	Incandescent pump compartment light (EA).	1
5400-0054	Spotlight Specialty 2150 hand held located on officer's side of cab dash w/12V receptacle.	1
5400-0092	Weldon pump panel LED light package with (3) lights per side pump panel. Pump panels over 45" may require additional lights. Side mount only.	1
CONTROLS / SWITCHES		
5100-0000-199	Foot switch to control air horns located officer's side.	1
5100-0007-198	Foot switch to control electronic siren located driver's side.	1
MISC ELECTRICAL		
1750-0082-762	12V power distribution module. Includes (6) battery hot and (6) switched hot circuits. 100 amps max (IATS). Location: behind officer's seat.	1
5110-0017	Back-up alarm 97 dB.	1
LIGHTS - QUARTZ		
5450-0290-408	Light Whelen Pioneer model PFP1 12V with internal top raise pole mount. Includes switch accessible to driver. Location: officer side of pump module forward area.	1
5450-0290-G19	Light Whelen Pioneer model PFP1 12V with internal top raise pole mount. Includes switch accessible to driver. Location: driver side rearward of crosslay(s).	1
ELBOWS		
7400-0004	Elbow 30 degree chrome swivel w/2.5"FNST x 2.5"MNST.	3
HAND TOOLS		
7600-0005	Pike Pole Fiberglass 6'.	1
7600-0007	Pike Pole Fiberglass 10'.	1
HOSE / NOZZLES		
7700-0004	Hard suction hose 6" X 10' with Pyrolite couplings.	2
GROUND LADDERS		

7800-0007	Alco-Lite PRL-14' roof ladder.	1
7800-0016	Alco-Lite PEL-24' 2-section extension ladder.	1
7800-0032	Alco-Lite FL-10, 10' folding ladder w/safety shoes.	1
MISC LOOSE EQUIPMENT		
7900-0010	Chrome Barrel Strainer 6" NST.	1
7900-0014	DOT Required Drive Away Kit - Kit includes three (3) triangular warning reflectors with carrying case. This kit is for the end user and is to remain with the truck.	1
EXTERIOR PAINT		
8100-0071	Undercoating E-ONE.	1
8100-0089	All applicable pump/pre-connect application modules are to have a sanded finish (not painted job color). Includes upper and lower pump modules, crosswalk module and/or speedlay/pre-connect module (as applicable). Rear mounted body/pump module to be painted job color.	1
8100-0116	Rear body surface to have a sanded finish (not painted job color). Includes hinged doors that do not have discrete sales codes and removable panels.	1
8100-0176-000-17	Paint E-ONE chassis cab - Sikkens paint. Color: FLNA3225E-1 Red.	1
8100-0182-000-17	Paint Body - Small - For Pumpers, Rear Mounts, S/A Tankers/Wetsides and Rescues. Sikkens paint. Color: FLNA3225E-1 Red.	1
8100-0186-000-39	Paint exterior surface of outer steel wheels. Sikkens paint. Color: Job Color.	1
INTERIOR PAINT		
8150-0011	The interior of the cab to be painted Zolatone gray.	1
STRIPING		
8300-0002-334-12	NFPA Scotchlite Stripe - 4" wide and straight on front/sides of cab and sides/rear of body. Color: White. Location: bottom of stripe flush with top of bumper and straight back.	1
8300-0042	White rubrail scotchlite insert.	1
8300-0084-000-72	Chevron "A" style 6" printed sheet Scotchlite striping full width on rear of body. Includes rear facing extrusions, panels and doors. Colors to be Yellow/Red.	1
WARRANTY / STANDARD & EXTENDED		
9100-0000	Standard 1 Year Warranty.	1
9100-0003	Lifetime Frame Warranty.	1
9100-0004	10 Year/100,000 Mile Structural Warranty for Alum Cab / Body - Statement of Warranty.	1
9100-0005	10 Year Stainless Steel Plumbing Warranty - Statement of Warranty.	1
9100-0019	10 Year Limited Paint and Perforation Warranty - For Sikkens Paint.	1
SUPPORT, DELIVERY, INSPECTIONS AND MANUALS		
9300-0009	Manuals, Operator and Service CD-ROM.	1
9300-0016	Approval Drawings-Standard.	1

9300-0316	Fire Apparatus Safety Guide published by FAMA, latest edition.	1	
PRICE	2016 E-ONE PUMPER - TYPHOON CUSTOM CHASSIS		$327,911

STATE OF OHIO TERM SCHEDULE

4200 SURFACE RD
COLUMBUS, OH 43228

Quote No: 57485

3/13/2015

Quote Rev:23 Drawing Rev:5

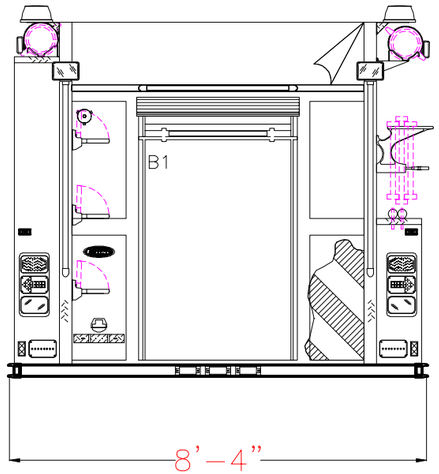

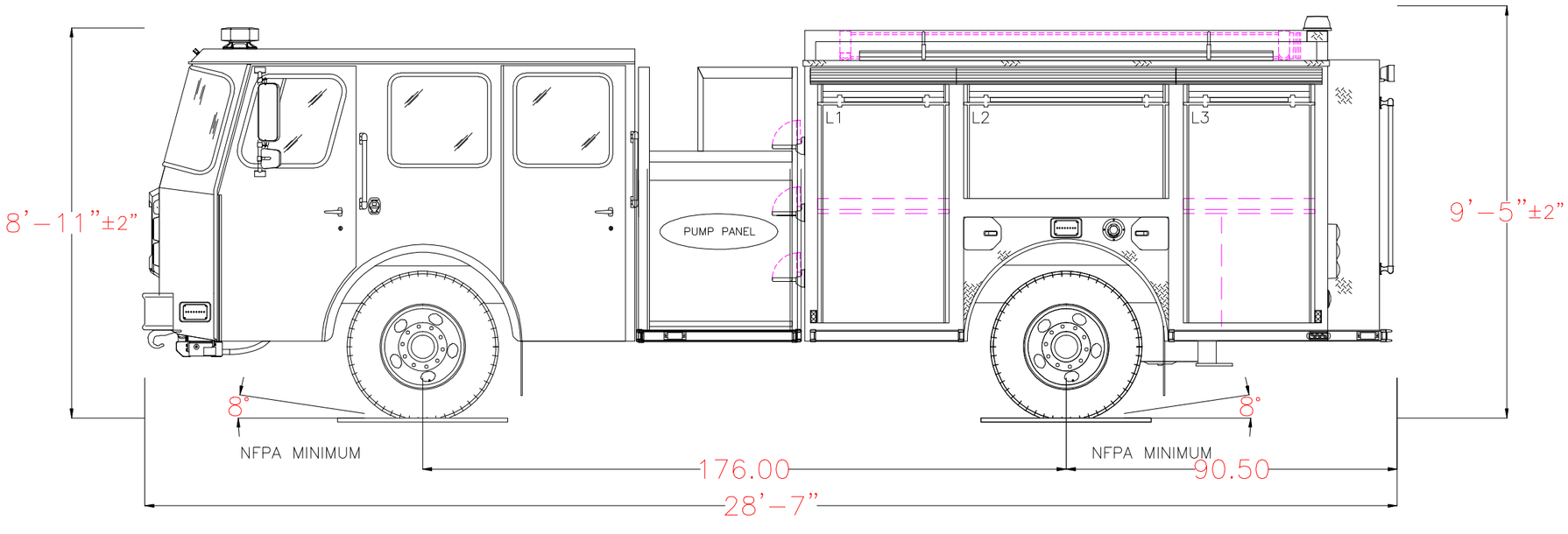

POWERED BY EZDRAW

Notice This drawing provides a GENERAL REPRESENTATION of the vehicle configuration and should be used for evaluation purposes. The respective dimensions shown,including overall height and length, are estimates and may vary due to manufacturing processes. All other items such as lighting and fixtures, plumbing, compartmentation, and other generally assembled details are shown for REFERENCE ONLY and may not be a direct reflection of the final truck configuration. In ALL situations where this drawing may conflict with the specifications, THE SPECIFICATIONS, AS REFLECTED IN THE APPROVED SHOP ORDER, SHALL PREVAIL. Unless otherwise specified, the proposed apparatus will be manufactured to the latest NFPA recommendations as well as other applicable federally regulated safety regulations. E-One reserves the right to engineer and incorporate design improvements and changes without notice, while adhering to the intent of the specification.

1250 GPM HALE QFLOPUMP 0 TOTAL VOLUME 0 TOTAL FOAM	HOSE LOADS :

	OPENING		INTERIOR DIMENSIONS				
COMPT.	WIDTH	HEIGHT	WIDTH	LOWER HEIGHT	LOWER DEPTH	UPPER HEIGHT	UPPER DEPTH
L1	34	59.75	36	30	26	26.75	12
L2	54	25.75	56	N/A	N/A	26.75	12
L3	34	59.75	36	30	26	26.75	12
R1	34	21	36	30	26	N/A	N/A
R2	34	21	36	30	26	N/A	N/A
B1	36	45	38	30	26	24	14

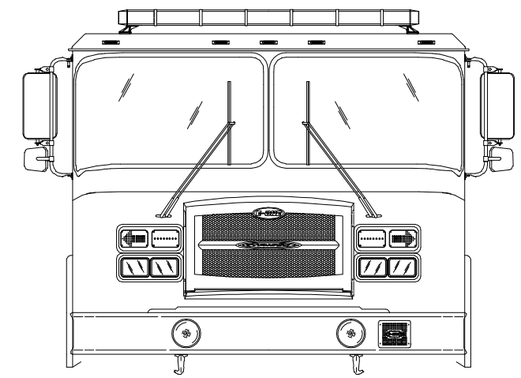

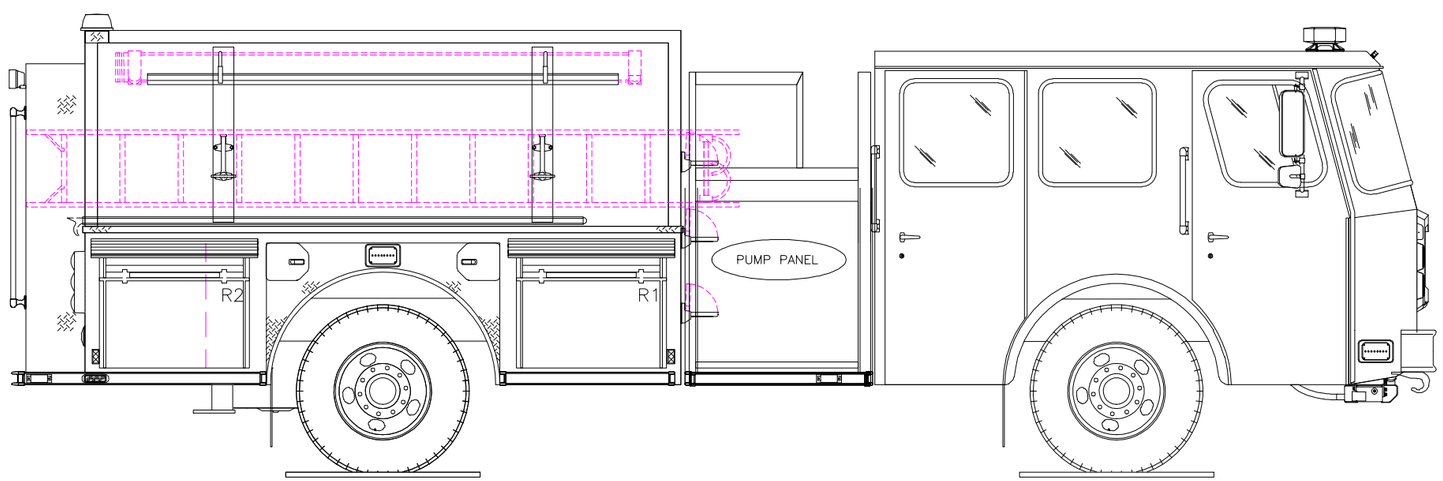

POWERED BY EZDRAW

Fire Apparatus Quotation for:
STATE OF OHIO TERM SCHEDULE

Quotation Number: 57487 Rev: 20

Unit Description: PMPR-TYPH

Quote Description: Pumper, Typhoon

Salescode	Extended Description	Qty
TESTING COMPLIANCE STANDARD		
1001-0015	The E-ONE supplied components of the vehicle shall meet the requirements of NFPA 1901, 2009 edition.	1
BUMPERS		
1160-0000	Bumper 10" stainless steel.	1
1160-0011	4" Front Bumper Extension.	1
FRAME ASSEMBLY		
1250-0003	Frame 10.25 x 3.5 x .375 chassis.	1
1250-0011	Rear underbody support frame.	1
AXLE OPTIONS		
1025-0004	Meritor FL941 front axle 18,000 lb.	1
1025-0016	Meritor RS-24-160 single rear axle 24,000 lb. capacity.	1
1025-0029	Front shock absorbers.	1
SUSPENSIONS		
1070-0001	Rear suspension springs rated equal to the capacity of the axle.	1
WHEEL OPTIONS		
1050-0000	Steel wheels for front axle (2).	1
1050-0002	Steel wheels for rear axle (4).	1
1050-0007	Front axle wheel trim kit. Includes stainless steel lug nut covers (chrome plated plastic if applicable) and center cap with E-ONE logo. Note: Center cap will have an inspection port IPO a logo if equipped with Stemco oil seals.	1
1050-0008	Rear axle (single) wheel trim kit. Includes stainless steel lug nut covers (chrome plated plastic if applicable) and center cap with E-ONE logo. E-ONE custom chassis w/steel wheels will have chrome plated plastic lug covers.	1

TIRE OPTIONS		
1060-0001	Two Michelin 315 tires model XZA-1 for front axle.	1
1060-0015	Four Michelin 11R rear tires with XDN2 mud and snow tread.	1
1060-0117	RWC AirGuard LED tire pressure monitoring valve stem caps (6) for single rear axle applications.	1
BRAKE SYSTEMS		
1100-0000	16-1/2" x 6" S-cam brakes with ArvinMeritor automatic slack adjusters for front axle.	1
1100-0002	ArvinMeritor 16-1/2" x 7" S-cam brakes with cast brake drums for a single rear axle.	1
1100-0005	Brake system air 4X2/4X4.	1
1100-0006	Parking brake release mounted on the driver's side lower dash.	1
AIR SYSTEM OPTIONS		
1110-0000-001	Inlet for air system. Location: driver door jamb.	1
1110-0002	Air dryer Bendix AD-9.	1
1110-0006	Air lines nylon.	1
1110-0041	Air horns Grover recessed in bumper (PR).	1
ENGINES & TRANSMISSIONS		
1200-0017	Push-button transmission shift selector.	1
1200-0020	TransSynd synthetic transmission fluid for EVS3000.	1
1200-0097	Electronic limiting of speed to 68 MPH maximum. Note: Max speed may be set at 65 MPH due to tire rating.	1
1200-0234	Eng/Trans Cummins ISL 350HP/EVS3000 2013 EPA compliant engine.	1
SECONDARY BRAKING		
1125-0002	Jacobs engine compression brake.	1
1125-0023	Transmission to seek second gear when Jacobs engine brake or Telma retarder is engaged. N/A with Trans retarder.	1
COOLING PACKAGE		
1800-0013	Cooling system for use with Cyclone II X, Typhoon X, and Quest chassis. For use with 2010/2013 EPA engines. Includes coolant recovery system.	1
FUEL SYSTEMS		
1350-0003	Fuel system 50 gallon.	1
1350-0012-670	Fuel shut-off valve. Location: one (1) inlet side of OEM fuel filter.	1
1350-0022	Fuel line hose rubber.	1
ALTERNATOR		

1700-0003	Alternator Leece Neville 270 amp SAE, 240 amp NFPA rating.	1
BATTERIES		
1400-0002	Battery four group 31 1000 CCA.	1
CHASSIS OPTIONS		
1680-0005	Thermatic fan clutch.	1
1680-0006	Drivelines 1710.	1
1680-0011	Tow eyes rear below body, painted.	1
1680-0042	Tow hooks front painted in the down position.	1
1680-0250-M58	Diesel Exhaust Fluid (DEF) 5 gallon tank for 2013 EPA engines. Location: left side below rear of cab.	1
1680-0284	Radiator mounted power steering cooler.	1
CAB MODEL		
1520-0013	Typhoon X medium cab with 58" CA	1
CAB ROOF TYPE		
1615-0010	Cab roof to be "flat" (non-vista).	1
CAB BADGE PACKAGE		
1610-0000	Cab and body to have applicable E-ONE logos.	1
GRILLE		
1620-0004	ABS chrome plated grille.	1
CAB DOOR OPTIONS		
1550-0003	Rear crew cab doors in the medium position.	1
1550-0005	Driver and officer cab door windows. Include forward vent windows.	1
1550-0011	Rear crew cab door windows. Includes manual roll-down actuation. Not available on Typhoon or CII with paddle style door latching.	1
1550-0016	Cab door panels ABS.	1
1550-0025	All cab doors shall have "L" style exterior latches.	1
1550-0027	Front cab door windows to have manual actuation.	1
1550-0038-659	(4) LED cab step area lighting. Locate each light on each cab door in the inboard position. Lights to be switched with door ajar.	1
1550-0044	All cab door kick plates to be made from diamond plate aluminum.	1
1550-0059-000-G6	Reflective Red/Lemon Yellow printed striping positioned in the "A" formation located on the cab door panels.	1
1550-0077	Interior cab door locks - manual. Will have manual actuation from each respective door. Includes barrel style key lock on each exterior cab door.	1
1550-0084	All cab exterior access doors to have 1250 keyed locks.	1

MIRRORS		
1670-0003	Velvac 2010 mirrors. Door mounted west coast style with remote control and heat.	1
MISC EXTERIOR CAB OPTIONS		
1550-0020	Windows cab side fixed driver's side.	1
1550-0033	Windows cab side fixed officer's side.	1
1675-0022	Pair of 18" handrails located just behind driver and officer front door one each side.	1
1675-0023	Pair of 18" handrails located just behind driver and officer rear door (ALS doors if equipped) one each side.	1
1675-0030	Mud flaps, front, black with E-ONE logo.	1
1675-0047	Rear cab wall to be 3/16" aluminum diamond plate.	1
1675-0202	Mounting plate for battery charger receptacle, indicator and air inlet (if applicable). Plate to be removable brushed stainless steel.	1
HVAC		
1515-0017	Air conditioning for the Typhoon X, CII X and Quest with Cummins ISC/ISL engine and radiator mounted condenser.	1
1515-0053	Controls for heating and air conditioning shall be located in the center dash area. (Lower area on Typhoon and CII with severe duty dash)	1
SEATS		
1510-0003	Seats, Inc. brand 911 cab seats.	1
1510-0008	Seat color gray.	1
1510-0035-147	Universal air pack bottle bracket (EA). Location: officer's seat.	1
1510-0035-148	Universal air pack bottle bracket (EA). Location: rear facing driver's side.	1
1510-0035-215	Universal air pack bottle bracket (EA). Location: rear facing officer's side.	1
1510-0038	Driver seat 911 air ride.	1
1510-0042	Officer seat to be 911 fixed SCBA.	1
1510-0050	Rear facing 911 seat with SCBA driver's side.	1
1510-0053	Rear facing 911 seat with SCBA officer's side.	1
1510-0234	Seat cover material Turnout Tuff.	1
1685-0031	Seating capacity tag of four occupants.	1
MISC INTERIOR CAB OPTIONS		
1685-0000	Cab interior gray. Does not include engine cover or seat color.	1
1685-0005	Lexan sun visors, driver and officer's side overhead.	1
1685-0168	ABS Dash package. Includes center and officer side dash, lower kick panels and "A" post covers.	1

1685-0187	Severe duty engine cover, molded polyurethane.	1
CAB ELECTRICAL OPTIONS		
1750-0013-172	Turn signal Whelen 600 LED amber arrow pair located upper headlight bezel.	1
1750-0024-179-04	Auto-Eject receptacle inlet 20 amp located outside driver's door next to handrail with a Yellow cover.	1
1750-0029	Switch horn button two position DOT/air horn.	1
1750-0046-195	Cab Headlights. Position: lower.	1
1750-0072-593	12 VDC (or 24VDC) electrical outlet in the cab wired battery hot. Location: officer side dash.	2
1750-0075	English dominant main cab gauge cluster.	1
1750-0158	Dome Lts Red/White LED. Package includes two lights mounted in the front and two mounted in the rear of the cab. White light wired through door and light assembly switch. Red light through light assembly switch.	1
1750-0188	DPF regeneration override switch.	1
1750-0198-A31	Battery charger to be located behind driver's seat.	1
1750-0343	Battery charger E-ONE LPC 20. 120 volt inlet, 20 amp output.	1
1750-0435	Halogen cab headlights. TyphoonX, CIIX and QST2 only.	1
BODY COMPT LEFT SIDE		
3100-0153	Driver side body with full height 42" wide forward and 56" wide rearward enhanced extended compartmentation. Includes (1) 56" wide compartment over the wheel well.	1
BODY COMPT RIGHT SIDE		
3120-0283	Officer side body with full height 42" wide forward and 56" wide rearward enhanced extended compartmentation. Includes (1) 56" wide compartment over the wheel well and one (1) storage tunnel.	1
BODY COMPT REAR		
3110-0013	Full Height Rear Compartment with Officer Side Storage Tunnel. Includes smooth plate panels and storage access door with push button latch.	1
3110-0052	Bolt-on diamond plate tailboard (full width of rear compartment). Includes the enhanced extended side compartment frame work and handrails- (2) vertical on trailing edge of body and horizontal mounted handrail(s) below hosebed.	1
3110-0092	Enhanced Extended Compartmentation stepped down below hosebed level. Includes embossed diamond plate compartment tops.	1
DOORS		
3300-0017-004	Door roll up short (up to 45") with satin finish ROM. Location(s): L2.	1
3300-0017-016	Door roll up short (up to 45") with satin finish ROM. Location(s): R2.	1
3300-0019-003	Door roll up tall (greater than 45") with satin finish ROM. Location(s): L1.	1

3300-0019-005	Door roll up tall (greater than 45") with satin finish ROM. Location(s): L3.	1
3300-0019-015	Door roll up tall (greater than 45") with satin finish ROM. Location(s): R1.	1
3300-0019-017	Door roll up tall (greater than 45") with satin finish ROM. Location(s): R3.	1
3300-0019-027	Door roll up tall (greater than 45") with satin finish ROM. Location(s): B1.	1
SHELVES		
3370-0025-101	Permanent shelf. Locate in R1 at offset (above extrusion if applicable).	1
3370-0025-102	Permanent shelf. Locate in R3 at offset (above extrusion if applicable).	1
3370-0052-003	Adjustable shelf (J-Style) for non-transverse compartments 16" or greater in depth. Location: L1.	1
3370-0052-004	Adjustable shelf (J-Style) for non-transverse compartments 16" or greater in depth. Location: L2.	1
3370-0052-005	Adjustable shelf (J-Style) for non-transverse compartments 16" or greater in depth. Location: L3.	1
3370-0052-027	Adjustable shelf (J-Style) for non-transverse compartments 16" or greater in depth. Location: B1.	1
3370-0054-003	Tracks for adjustable shelf and/or adjustable tray in compartments 16" or greater in depth. Location: L1.	1
3370-0054-004	Tracks for adjustable shelf and/or adjustable tray in compartments 16" or greater in depth. Location: L2.	1
3370-0054-005	Tracks for adjustable shelf and/or adjustable tray in compartments 16" or greater in depth. Location: L3.	1
3370-0054-027	Tracks for adjustable shelf and/or adjustable tray in compartments 16" or greater in depth. Location: B1.	1
COVERS		
3305-0007-000-02	Vinyl Red hose bed cover with attached rear flap(s).	1
3305-0008-000-02	Vinyl Red crosslay cover with attached side flaps.	1
PUMP MODULE		
3130-0167	Pump module to be 76" wide (side to side). Includes upper, lower, crosswalk, speedlay and tranverse module(s) if applicable.	1
3130-0523	Side mount pump module. Extruded aluminum with runningboards.	1
3130-0532	Pump panel opening is 39" wide. Pumper / tanker only.	1
3130-0539	Pump module height is 75". Pumper / tanker only.	1
PUMP PANELS		
3134-0016	Stainless steel driver and officer side pump panels.	1
3134-0064	The gauge panel(s) on the driver side of the Side Mount module to be hinged upward. Panel(s) to include (2) mechanical/pneumatic (as applicable to panel size) hold opens and latches.	1
3134-0143	Officer side pump panel to be vertical hinged on forward extrusion. Panel to be (3)	1

	pieces with upper (2) panels secured in the closed position with push button latches. Upper panel to be held open with gas shock.	
MISC PUMP PANEL OPTIONS		
4460-0003	Pump panel tags color coded per NFPA compliance.	1
PUMP MODULE OPTIONS		
3136-0058	E-ONE logo mounted one each side on pump module/preconnect panels. Logos to be sized as applicable to available space on panels.	1
3136-0138	Pump module storage pan.	1
3136-0141	Crosslay double 4.25" wide single stack to hold up to 200' of 2.0" DJ (each).	1
WATER TANK		
4010-0099	Fill tower(s) to be located offset to officer side of water tank.	1
4010-0177	780 Gallon "R" Water Tank. UPF Poly III color fill towers. Note: Any foam cell(s) and/or storage options through the tank will reduce the overall water capacity.	1
TANK PLUMBING		
4450-0010	2" tank fill Akron manual valve.	1
4450-0119	3" tank to pump Akron manual valve w/4" tank connection.	1
LADDER STORAGE / RACKS		
3365-0028	Hard Suction Storage Rack. Driver side compartment top. Includes spring hold downs and scuff plates behind spring mounts (as applicable).	1
3365-0035	Hard Suction Storage Rack. Officer side compartment top. Includes spring hold downs and scuff plates behind spring mounts (as applicable).	1
3365-0049	Brand of ladders capable of being carried on unit to be Alco-Lite.	1
3365-0087-Z71	The length of ladders capable of being stored shall be the following: 24' 2-section, 14' roof ladder and 10' attic ladder w/shoes.	1
3365-0149-O97	Storage tunnel capable of holding: (1) 2-section, (1) roof, (1) attic, (2) pike poles, (1) backboard in Officer side storage tunnel.	1
HANDRAILS / STEPS		
3330-0103	Dual lighted LED folding steps rear NFPA. Includes folding steps on driver side (staggered stepped as applicable with tailboard depth) for NFPA hosebed access and handrail mounted on driver side upper hosebed side (as applicable).	1
3330-0105-060	Dual lighted LED folding step. Location: officer side front compartment face. Each location requires a minimum of (1) handrail per NFPA.	3
3330-0105-062	Dual lighted LED folding step. Location: driver side front compartment face. Each location requires a minimum of (1) handrail per NFPA.	3
MISC BODY OPTIONS		
3090-0002	OAH. Unit has no overall height restrictions.	1
3090-0004	OAL. Unit has no overall length restrictions.	1

3090-0007	The hose bed is to have NFPA capacity.	1
3340-0004	Hosebed above the booster tank. Includes forward hosebed and tower(s) cover plate work (as applicable). Hosebed adjustable divider extrusion rearward of the furthest tower is to run full width of the hosebed (as is practical with other hosebed mounted equipment).	1
3340-0015	Diamond plate single axle wheel well. Includes bolt-on composite wheel well liners and aluminum trim fenderettes.	1
3340-0035	Divider Long. To run full length of hose bed (front to rear).	1
3340-0058	Recessed fuel fill driver side wheel well.	1
3340-0074	Body mainframe and hosebed side assemblies for a 85" high body.	1
3340-0093	Mud flaps, rear, black with E-ONE logo.	1
3340-0110	The rear of each hose bed divider to have a hand hold cut-out(s).	1
3340-0145	Rub rail for the body and pump area module(s).	1
3340-0681	Body mainframe layout line to be 24". Includes body and all applicable modules.	1
SCBA BOTTLE STORAGE		
3320-0020	SCBA Bottle Storage. (4) Fire Shopp SCBA bottle storage with hinged doors with push button latches. (2) officer side and (2) driver side in wheel well area.	1
3320-0100	Strap(s), loop style to retain SCBA bottle(s). Locate one per bottle in each exterior storage compartment.	4
PUMPS		
4005-0013	Hale QFLO 750-1250 GPM pump, single stage.	1
4005-0030	Rating 1250 GPM	1
PUMP CERTIFICATION		
4475-0000	Pump certification 750-2250 GPM	1
PUMP OPTIONS		
4015-0008	Zinc anodes for Hale pump (PR), (1) discharge side and (1) intake side.	1
4015-0052-198	Steamers to be Flush. Location: driver's side.	1
4015-0052-199	Steamers to be Flush. Location: officer's side.	1
4015-0098	Manual operated master pump drain. The master drain shall be clearly marked and placed in accessible location on pump panel.	1
4015-0210	Pump cooler with Innovative Control 1/4 turn valve with "T" handle and label.	1
INTAKES		
4440-0005	2.5" Left Intake Akron Manual Valve.	1
INTAKE OPTIONS		
4445-0016	Intake relief valve, Hale 2.5".	1

DISCHARGES AND PRECONNECTS		
4415-0012-654	1.5" crosslay with Akron manual valve. Location: crosslay 1 & 2.	2
4415-0014-581	2.5" Left Pump Panel Discharge Akron Manual Valve. Location: left side discharge 1.	1
4415-0014-582	2.5" Left Pump Panel Discharge Akron Manual Valve. Location: left side discharge 2.	1
4415-0022-350	2.5" Left Rear Discharge Akron Manual Valve. Location: left rear discharge.	1
4415-0041	3" Deck Gun Discharge, Akron manual valve.	1
4415-0054-583	4" Right Pump Panel Discharge with 3" Akron Manual Valve (Waterous pumps noted location to be forward lower port). Location: right side discharge 1.	1
4417-0106-L65	Deck gun piping to be positioned centered in deck gun channel.	1
DISCHARGE OPTIONS		
4417-0175	Innovative Controls push/pull valve controls with locking T handles.	1
4417-0176	Innovative Controls 3/4" bleeder/drain valve include lift lever with ergonomic grip.	7
4417-0185	Innovative Controls discharge and intake bezels with integral color code and verbiage for side mount pump panel.	1
PRESSURE GOVERNORS		
4465-0011	Class 1 TPG pressure governor. Includes, water, oil, volt and tachometer.	1
GAUGES		
4435-0083	Innovative Controls 10 LED SL series water tank level gauge. On pump panel.	1
4435-0246	2.5" Innovative Controls stainless steel case pressure gauge (0-400) with color code bezel.	7
4435-0247	4" Innovative Controls stainless steel case master pressure gauges with bezel. Intake 30-0-400, and discharge 0-400.	1
ELECTRICAL SYSTEMS		
5010-0013-Y83	Vehicle data recorder - 2009 NFPA compliant. Includes occupant detection with display. Display location: inboard on driver's side overhead console.	1
5010-0036	V-MUX Electrical system for pumper / tanker / rescue.	1
5010-0059-339	VFD Text display for V-MUX electrical system. Location: center of dash.	1
LIGHT BARS		
5300-0055	Light bar Whelen Freedom model FN72QLED 72" LED with MKEZ7 mounts and clear lenses. Location: Centered on the front cab roof.	1
WARNING LIGHT PACKAGES		
5550-0059-535	Whelen Super LED lower level warning light package. Includes (8) red 600 LED light heads and (2) red 500 LED light heads w/chrome flanges. Locate side facing lights: at forward most position, centered in rear wheel well, and side facing at rear of body	1

	in rubrail if equipped.	
WARNING LIGHTS		
5600-0078-479-06	Whelen Super LED beacon (PR) model L31H with Red domes. Location rear upper body on aerial style brackets.	1
5600-0105-170	Hazard (door ajar) light 2" LED. Location: center overhead.	1
SIRENS		
5500-0015	Whelen model 295SLSA1 siren with microphone (replaced 295HFSA1).	1
5500-0024-170	The electronic siren control is to be located on the center overhead.	1
SPEAKERS		
5510-0029-209	Speaker, Federal Signal Dynamax ES100 with "E-ONE" grille through bumper. Location: driver side front bumper.	1
DOT LIGHTING		
5150-0007	Whelen 600 series LED vertical mount tail lights. Includes LED stop/tail, arrow turn and halogen back-up lights with vertical Cast 3 housing and weatherproof connectors.	1
5150-0017	License plate light LED with chrome housing located at the rear of the body.	1
5150-0025	Marker light LED body/cab package. E-One custom cab and pumper or tanker body only.	1
5150-0032	Bracket license plate at rear of body.	1
LIGHTS - COMPARTMENT, STEP & GROUND		
5380-0077	Compartment light package Amdor Luma-Bar LED for medium bodies. Includes one light per compartment (two if transverse).	1
5380-0200	Ground light package EON LED - small.	1
LIGHTS - DECK AND SCENE		
5390-0058-395	Deck Lights - Truck-Lite LED model 81380 (PR). Location: rear body/beavertail area on the trailing edge up high.	1
5390-0076	Hose bed light Truck-Lite LED model 81380. Locate at front of hose bed. Switched with work light switch in cab.	1
5390-0102	Crosslay light Truck-Lite LED model 81380. Locate to rear of crosslay (SM) and forward of crosslay (TM as applicable). Switched with work light switch in cab.	1
LIGHTS - NON-WARNING		
5400-0003	Engine compartment light (EA).	1
5400-0010	Incandescent pump compartment light (EA).	1
5400-0054	Spotlight Specialty 2150 hand held located on officer's side of cab dash w/12V receptacle.	1
5400-0092	Weldon pump panel LED light package with (3) lights per side pump panel. Pump panels over 45" may require additional lights. Side mount only.	1

CONTROLS / SWITCHES		
5100-0000-199	Foot switch to control air horns located officer's side.	1
5100-0007-198	Foot switch to control electronic siren located driver's side.	1
MISC ELECTRICAL		
1750-0082-762	12V power distribution module. Includes (6) battery hot and (6) switched hot circuits. 100 amps max (IATS). Location: behind officer's seat.	1
5110-0017	Back-up alarm 97 dB.	1
LIGHTS - QUARTZ		
5450-0290-407	Light Whelen Pioneer model PFP1 12V with internal top raise pole mount. Includes switch accessible to driver. Location: driver side of pump module forward area.	1
5450-0290-408	Light Whelen Pioneer model PFP1 12V with internal top raise pole mount. Includes switch accessible to driver. Location: officer side of pump module forward area.	1
ELBOWS		
7400-0004	Elbow 30 degree chrome swivel w/2.5"FNST x 2.5"MNST.	3
HAND TOOLS		
7600-0005	Pike Pole Fiberglass 6'.	1
7600-0007	Pike Pole Fiberglass 10'.	1
HOSE / NOZZLES		
7700-0004	Hard suction hose 6" X 10' with Pyrolite couplings.	2
GROUND LADDERS		
7800-0007	Alco-Lite PRL-14' roof ladder.	1
7800-0016	Alco-Lite PEL-24' 2-section extension ladder.	1
7800-0032	Alco-Lite FL-10, 10' folding ladder w/safety shoes.	1
MISC LOOSE EQUIPMENT		
7900-0010	Chrome Barrel Strainer 6" NST.	1
7900-0014	DOT Required Drive Away Kit - Kit includes three (3) triangular warning reflectors with carrying case. This kit is for the end user and is to remain with the truck.	1
EXTERIOR PAINT		
8100-0071	Undercoating E-ONE.	1
8100-0089	All applicable pump/pre-connect application modules are to have a sanded finish (not painted job color). Includes upper and lower pump modules, crosswalk module and/or speedlay/pre-connect module (as applicable). Rear mounted body/pump module to be painted job color.	1

8100-0116	Rear body surface to have a sanded finish (not painted job color). Includes hinged doors that do not have discrete sales codes and removable panels.	1	
8100-0176-000-17	Paint E-ONE chassis cab - Sikkens paint. Color: FLNA3225E-1 Red.	1	
8100-0182-000-17	Paint Body - Small - For Pumpers, Rear Mounts, S/A Tankers/Wetsides and Rescues. Sikkens paint. Color: FLNA3225E-1 Red.	1	
8100-0186-000-39	Paint exterior surface of outer steel wheels. Sikkens paint. Color: Job Color.	1	
INTERIOR PAINT			
8150-0011	The interior of the cab to be painted Zolatone gray.	1	
STRIPING			
8300-0002-334-12	NFPA Scotchlite Stripe - 4" wide and straight on front/sides of cab and sides/rear of body. Color: White. Location: bottom of stripe flush with top of bumper and straight back.	1	
8300-0042	White rubrail scotchlite insert.	1	
8300-0084-000-72	Chevron "A" style 6" printed sheet Scotchlite striping full width on rear of body. Includes rear facing extrusions, panels and doors. Colors to be Yellow/Red.	1	
WARRANTY / STANDARD & EXTENDED			
9100-0000	Standard 1 Year Warranty.	1	
9100-0003	Lifetime Frame Warranty.	1	
9100-0004	10 Year/100,000 Mile Structural Warranty for Alum Cab / Body - Statement of Warranty.	1	
9100-0005	10 Year Stainless Steel Plumbing Warranty - Statement of Warranty.	1	
9100-0019	10 Year Limited Paint and Perforation Warranty - For Sikkens Paint.	1	
SUPPORT, DELIVERY, INSPECTIONS AND MANUALS			
9300-0009	Manuals, Operator and Service CD-ROM.	1	
9300-0016	Approval Drawings-Standard.	1	
9300-0316	Fire Apparatus Safety Guide published by FAMA, latest edition.	1	
PRICE	2016 E-ONE RESCUE PUMPER - TYPHOON CUSTOM CHASSIS		$343,788

STATE OF OHIO TERM SCHEDULE

4200 SURFACE RD
COLUMBUS, OH 43228

Quote No: 57487

3/13/2015

Quote Rev:20 Drawing Rev:5

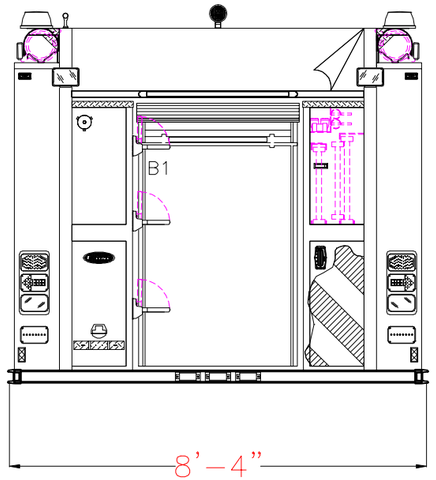

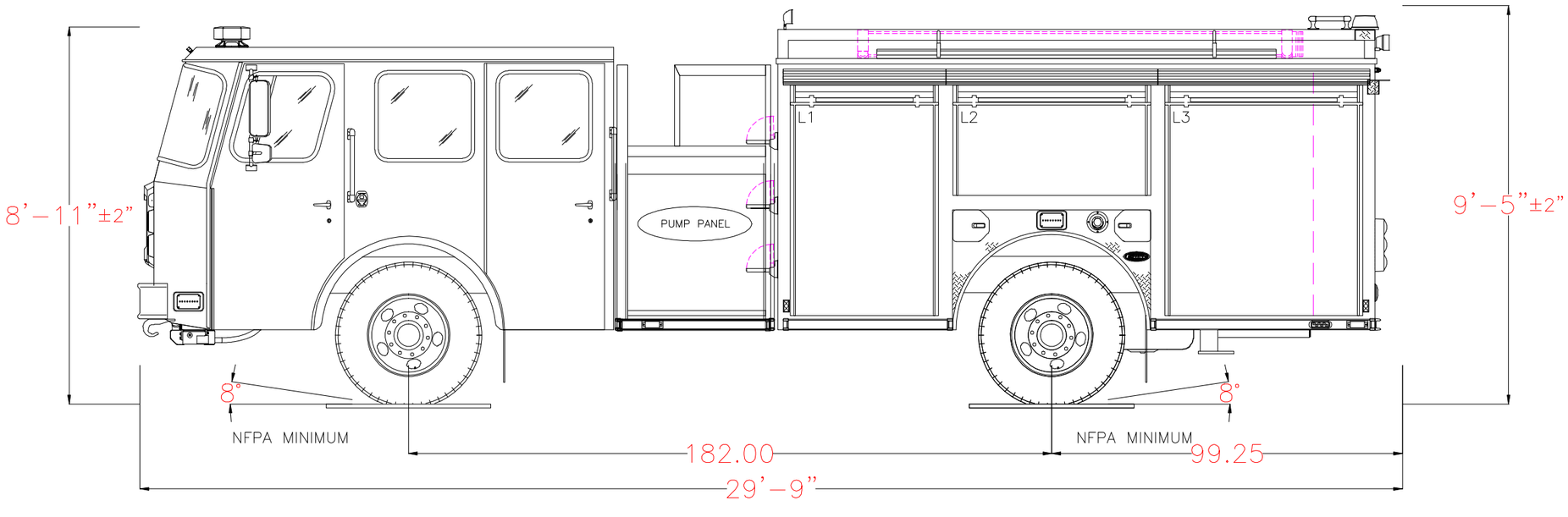

POWERED BY EZDRAW

Notice: This drawing provides a GENERAL REPRESENTATION of the vehicle configuration and should be used for evaluation purposes. The respective dimensions shown,including overall height and length, are estimates and may vary due to manufacturing processes. All other items such as lighting and fixtures, plumbing, compartmentation, and other generally assembled details are shown for REFERENCE ONLY and may not be a direct reflection of the final truck configuration. In ALL situations where this drawing may conflict with the specifications, THE SPECIFICATIONS, AS REFLECTED IN THE APPROVED SHOP ORDER, SHALL PREVAIL. Unless otherwise specified, the proposed apparatus will be manufactured to the latest NFPA recommendations as well as other applicable federally regulated safety regulations. E-One reserves the right to engineer and incorporate design improvements and changes without notice, while adhering to the intent of the specification.

1250 GPM HALE QFLOPUMP 0 TOTAL VOLUME 0 TOTAL FOAM	HOSE LOADS :

	OPENING		INTERIOR DIMENSIONS				
COMPT.	WIDTH	HEIGHT	WIDTH	LOWER HEIGHT	LOWER DEPTH	UPPER HEIGHT	UPPER DEPTH
L1	40	59.75	42	30	26	26.75	26
L2	54	25.75	56	N/A	N/A	26.75	26
L3	54	59.75	56	30	26	26.75	26
R1	40	59.75	42	30	26	26.75	12
R2	54	25.75	56	N/A	N/A	26.75	12
R3	54	59.75	56	30	26	26.75	12
B1	36	45	38	30	26	N/A	N/A

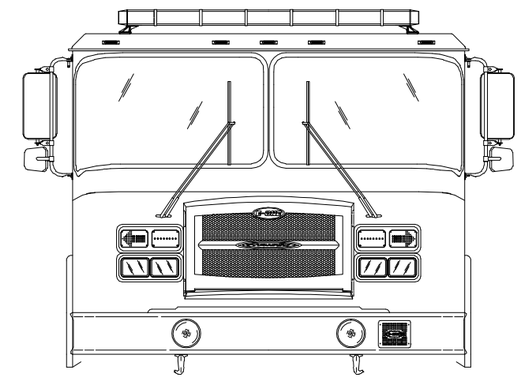

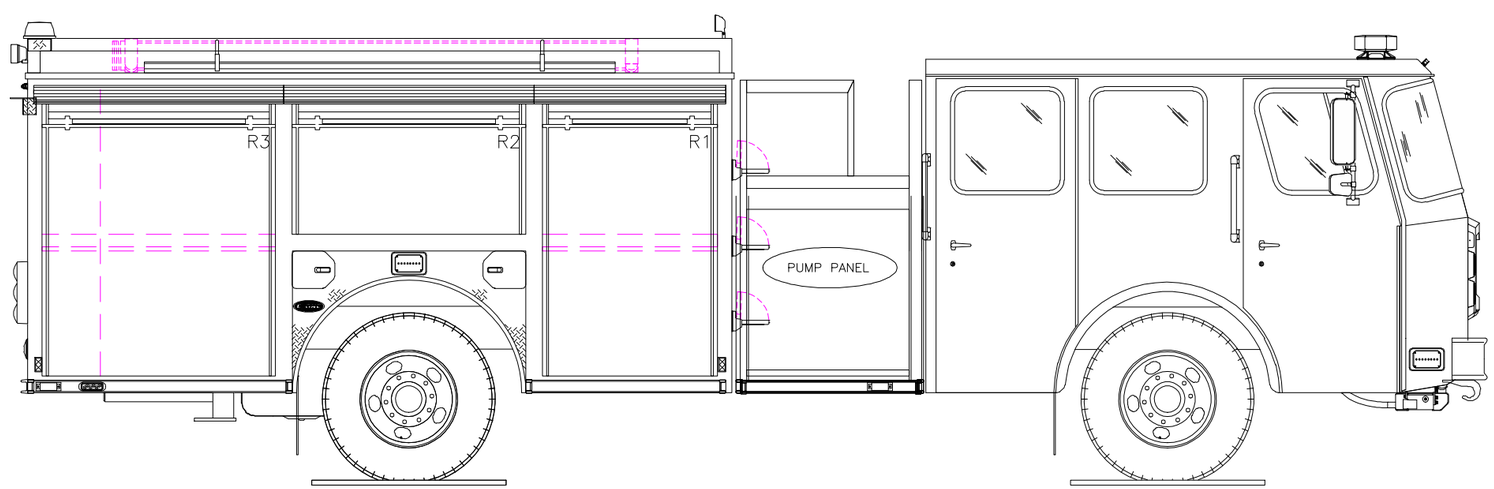

POWERED BY EZDRAW

Fire Apparatus Quotation for:
STATE OF OHIO TERM SCHEDULE

Quotation Number: 57489 Rev: 20

Unit Description: PAEM-TYPH

Quote Description: Pumper, Aluminum, eMAX, Typhoon

Salescode	Extended Description	Qty
TESTING COMPLIANCE STANDARD		
1001-0015	The E-ONE supplied components of the vehicle shall meet the requirements of NFPA 1901, 2009 edition.	1
BUMPERS		
1160-0000	Bumper 10" stainless steel.	1
1160-0011	4" Front Bumper Extension.	1
FRAME ASSEMBLY		
1250-0003	Frame 10.25 x 3.5 x .375 chassis.	1
1250-0011	Rear underbody support frame.	1
AXLE OPTIONS		
1025-0004	Meritor FL941 front axle 18,000 lb.	1
1025-0017	Meritor RS-25-160 single rear axle 27,000 lb. capacity.	1
1025-0029	Front shock absorbers.	1
SUSPENSIONS		
1070-0001	Rear suspension springs rated equal to the capacity of the axle.	1
WHEEL OPTIONS		
1050-0000	Steel wheels for front axle (2).	1
1050-0002	Steel wheels for rear axle (4).	1
1050-0007	Front axle wheel trim kit. Includes stainless steel lug nut covers (chrome plated plastic if applicable) and center cap with E-ONE logo. Note: Center cap will have an inspection port IPO a logo if equipped with Stemco oil seals.	1
1050-0008	Rear axle (single) wheel trim kit. Includes stainless steel lug nut covers (chrome plated plastic if applicable) and center cap with E-ONE logo. E-ONE custom chassis w/steel wheels will have chrome plated plastic lug covers.	1

TIRE OPTIONS		
1060-0001	Two Michelin 315 tires model XZA-1 for front axle.	1
1060-0016	Four Michelin 12R rear tires with XDN2 mud and snow tread.	1
1060-0117	RWC AirGuard LED tire pressure monitoring valve stem caps (6) for single rear axle applications.	1
BRAKE SYSTEMS		
1100-0000	16-1/2" x 6" S-cam brakes with ArvinMeritor automatic slack adjusters for front axle.	1
1100-0002	ArvinMeritor 16-1/2" x 7" S-cam brakes with cast brake drums for a single rear axle.	1
1100-0005	Brake system air 4X2/4X4.	1
1100-0006	Parking brake release mounted on the driver's side lower dash.	1
AIR SYSTEM OPTIONS		
1110-0000-001	Inlet for air system. Location: driver door jamb.	1
1110-0002	Air dryer Bendix AD-9.	1
1110-0006	Air lines nylon.	1
1110-0041	Air horns Grover recessed in bumper (PR).	1
ENGINES & TRANSMISSIONS		
1200-0017	Push-button transmission shift selector.	1
1200-0020	TransSynd synthetic transmission fluid for EVS3000.	1
1200-0097	Electronic limiting of speed to 68 MPH maximum. Note: Max speed may be set at 65 MPH due to tire rating.	1
1200-0234	Eng/Trans Cummins ISL 350HP/EVS3000 2013 EPA compliant engine.	1
SECONDARY BRAKING		
1125-0002	Jacobs engine compression brake.	1
1125-0023	Transmission to seek second gear when Jacobs engine brake or Telma retarder is engaged. N/A with Trans retarder.	1
COOLING PACKAGE		
1800-0013	Cooling system for use with Cyclone II X, Typhoon X, and Quest chassis. For use with 2010/2013 EPA engines. Includes coolant recovery system.	1
FUEL SYSTEMS		
1350-0003	Fuel system 50 gallon.	1
1350-0012-670	Fuel shut-off valve. Location: one (1) inlet side of OEM fuel filter.	1
1350-0022	Fuel line hose rubber.	1
ALTERNATOR		

1700-0003	Alternator Leece Neville 270 amp SAE, 240 amp NFPA rating.	1
BATTERIES		
1400-0002	Battery four group 31 1000 CCA.	1
CHASSIS OPTIONS		
1680-0005	Thermatic fan clutch.	1
1680-0006	Drivelines 1710.	1
1680-0008	Tow eyes front painted below bumper/cab (PR).	1
1680-0011	Tow eyes rear below body, painted.	1
1680-0250-M58	Diesel Exhaust Fluid (DEF) 5 gallon tank for 2013 EPA engines. Location: left side below rear of cab.	1
1680-0284	Radiator mounted power steering cooler.	1
CAB MODEL		
1520-0013	Typhoon X medium cab with 58" CA	1
CAB ROOF TYPE		
1615-0007	Delete rear vista roof windows.	1
1615-0010	Cab roof to be "flat" (non-vista).	1
CAB BADGE PACKAGE		
1610-0000	Cab and body to have applicable E-ONE logos.	1
GRILLE		
1620-0004	ABS chrome plated grille.	1
CAB DOOR OPTIONS		
1550-0003	Rear crew cab doors in the medium position.	1
1550-0005	Driver and officer cab door windows. Include forward vent windows.	1
1550-0011	Rear crew cab door windows. Includes manual roll-down actuation. Not available on Typhoon or CII with paddle style door latching.	1
1550-0016	Cab door panels ABS.	1
1550-0025	All cab doors shall have "L" style exterior latches.	1
1550-0027	Front cab door windows to have manual actuation.	1
1550-0038-659	(4) LED cab step area lighting. Locate each light on each cab door in the inboard position. Lights to be switched with door ajar.	1
1550-0044	All cab door kick plates to be made from diamond plate aluminum.	1
1550-0059-000-G6	Reflective Red/Lemon Yellow printed striping positioned in the "A" formation located on the cab door panels.	1
1550-0077	Interior cab door locks - manual. Will have manual actuation from each respective door. Includes barrel style key lock on each exterior cab door.	1

1550-0083	All cab exterior access doors to have CH751 keyed locks.	1
MIRRORS		
1670-0003	Velvac 2010 mirrors. Door mounted west coast style with remote control and heat.	1
MISC EXTERIOR CAB OPTIONS		
1550-0020	Windows cab side fixed driver's side.	1
1550-0033	Windows cab side fixed officer's side.	1
1675-0022	Pair of 18" handrails located just behind driver and officer front door one each side.	1
1675-0023	Pair of 18" handrails located just behind driver and officer rear door (ALS doors if equipped) one each side.	1
1675-0030	Mud flaps, front, black with E-ONE logo.	1
1675-0047	Rear cab wall to be 3/16" aluminum diamond plate.	1
1675-0202	Mounting plate for battery charger receptacle, indicator and air inlet (if applicable). Plate to be removable brushed stainless steel.	1
HVAC		
1515-0017	Air conditioning for the Typhoon X, CII X and Quest with Cummins ISC/ISL engine and radiator mounted condenser.	1
1515-0053	Controls for heating and air conditioning shall be located in the center dash area. (Lower area on Typhoon and CII with severe duty dash)	1
SEATS		
1510-0003	Seats, Inc. brand 911 cab seats.	1
1510-0008	Seat color gray.	1
SEATS		
1510-0035-147	Universal air pack bottle bracket (EA). Location: officer's seat.	1
1510-0035-148	Universal air pack bottle bracket (EA). Location: rear facing driver's side.	1
1510-0035-215	Universal air pack bottle bracket (EA). Location: rear facing officer's side.	1
1510-0038	Driver seat 911 air ride.	1
1510-0042	Officer seat to be 911 fixed SCBA.	1
1510-0050	Rear facing 911 seat with SCBA driver's side.	1
1510-0053	Rear facing 911 seat with SCBA officer's side.	1
1510-0234	Seat cover material Turnout Tuff.	1
1685-0031	Seating capacity tag of four occupants.	1
MISC INTERIOR CAB OPTIONS		
1685-0000	Cab interior gray. Does not include engine cover or seat color.	1
1685-0005	Lexan sun visors, driver and officer's side overhead.	1

1685-0168	ABS Dash package. Includes center and officer side dash, lower kick panels and "A" post covers.	1
1685-0187	Severe duty engine cover, molded polyurethane.	1
CAB ELECTRICAL OPTIONS		
1750-0013-172	Turn signal Whelen 600 LED amber arrow pair located upper headlight bezel.	1
1750-0024-179-04	Auto-Eject receptacle inlet 20 amp located outside driver's door next to handrail with a Yellow cover.	1
1750-0029	Switch horn button two position DOT/air horn.	1
1750-0046-195	Cab Headlights. Position: lower.	1
1750-0072-593	12 VDC (or 24VDC) electrical outlet in the cab wired battery hot. Location: officer side dash.	2
1750-0075	English dominant main cab gauge cluster.	1
1750-0158	Dome Lts Red/White LED. Package includes two lights mounted in the front and two mounted in the rear of the cab. White light wired through door and light assembly switch. Red light through light assembly switch.	1
1750-0188	DPF regeneration override switch.	1
1750-0198-A31	Battery charger to be located behind driver's seat.	1
1750-0343	Battery charger E-ONE LPC 20. 120 volt inlet, 20 amp output.	1
1750-0435	Halogen cab headlights. TyphoonX, CIIX and QST2 only.	1
BODY COMPT LEFT SIDE		
3100-0245	Driver side body with full height 60" wide forward and 56" wide rearward compartmentation. Includes (1) 56" wide compartment over the wheel well. Side Mount eMAX only.	1
BODY COMPT RIGHT SIDE		
3120-0403	Officer side body with full height 60" wide forward and 56" wide rearward compartmentation. Includes (1) 56" wide compartment over the wheel well and one (1) storage tunnel located behind the upper (3) compartment back walls.	1
BODY COMPT REAR		
3110-0013	Full Height Rear Compartment with Officer Side Storage Tunnel. Includes smooth plate panels and storage access door with push button latch.	1
3340-0102	Angled (Boston style) style tailboard corners.	1
3340-0319	Bolt-on diamond plate 10" tailboard (full width of body). For use with rear ladder application. Includes handrails- (1) vertical on trailing edge of body opposite side of ladder and handrail(s) horizontal below hosebed.	1
BODY MODULE FRONT		
3125-0005	eMAX Forward body configuration - SM. Includes a lower double preconnect storage area, upper transverse storage area, rack in upper storage area for (2) backboards (vertical stored offset forward - sleeve each side of center pump access), center front	1

pump access doors and removable center floor in upper area.

DOORS		
3300-0017-004	Door roll up short (up to 45") with satin finish ROM. Location(s): L2.	1
3300-0017-016	Door roll up short (up to 45") with satin finish ROM. Location(s): R2.	1
3300-0017-027	Door roll up short (up to 45") with satin finish ROM. Location(s): B1.	1
3300-0019-003	Door roll up tall (greater than 45") with satin finish ROM. Location(s): L1.	1
3300-0019-005	Door roll up tall (greater than 45") with satin finish ROM. Location(s): L3.	1
3300-0019-015	Door roll up tall (greater than 45") with satin finish ROM. Location(s): R1.	1
3300-0019-017	Door roll up tall (greater than 45") with satin finish ROM. Location(s): R3.	1
SHELVES		
3370-0025-101	Permanent shelf. Locate in R1 at offset (above extrusion if applicable).	1
3370-0025-102	Permanent shelf. Locate in R3 at offset (above extrusion if applicable).	1
3370-0052-003	Adjustable shelf (J-Style) for non-transverse compartments 16" or greater in depth. Location: L1.	1
3370-0052-004	Adjustable shelf (J-Style) for non-transverse compartments 16" or greater in depth. Location: L2.	1
3370-0052-005	Adjustable shelf (J-Style) for non-transverse compartments 16" or greater in depth. Location: L3.	1
3370-0052-027	Adjustable shelf (J-Style) for non-transverse compartments 16" or greater in depth. Location: B1.	1
3370-0053-579	Adjustable shelf (C-Style) for non-transverse compartments up to 15.99" in depth. Location: B1 upper.	1
3370-0054-003	Tracks for adjustable shelf and/or adjustable tray in compartments 16" or greater in depth. Location: L1.	1
3370-0054-004	Tracks for adjustable shelf and/or adjustable tray in compartments 16" or greater in depth. Location: L2.	1
3370-0054-005	Tracks for adjustable shelf and/or adjustable tray in compartments 16" or greater in depth. Location: L3.	1
3370-0054-027	Tracks for adjustable shelf and/or adjustable tray in compartments 16" or greater in depth. Location: B1.	1
3370-0055-579	Tracks for adjustable shelf in shallow compartments up to 15.99" deep. Location: B1 upper.	1
COVERS		
3305-0007-000-02	Vinyl Red hose bed cover with attached rear flap(s).	1
3305-0016-000-02	Vinyl Red speedlay side covers.	1
PUMP PANELS		
3134-0079	The side pump intake / discharge panels to be stainless steel. eMAX only.	1

3134-0080	Pump operator control panel in driver side forward body compartment to be stainless steel. eMAX only.	1
3134-0095	The upper gauge panel on the enclosed pump panel is to be hinged forward. Side mount eMAX only.	1
MISC PUMP PANEL OPTIONS		
4460-0003	Pump panel tags color coded per NFPA compliance.	1
4460-0058	Push-pull handles on the pump operator's panel to be oriented vertical. eMAX only.	1
PUMP MODULE OPTIONS		
3136-0058	E-ONE logo mounted one each side on pump module/preconnect panels. Logos to be sized as applicable to available space on panels.	1
3136-0090	Speedlay tray - removable. Tray includes a 1.25" extruded alum handle low on each end of tray and slots down each side to facilitate lifting. The floor of the tray shall have poly slides and be slotted to prevent the accumulation of water and allow for ventilation of wet hose.	2
WATER TANK		
4010-0099	Fill tower(s) to be located offset to officer side of water tank.	1
4010-0177	780 Gallon "R" Water Tank. UPF Poly III color fill towers. Note: Any foam cell(s) and/or storage options through the tank will reduce the overall water capacity.	1
TANK PLUMBING		
4450-0010	2" tank fill Akron manual valve.	1
4450-0121	3" Tank to pump Akron air actuated valve w/4" tank connection.	1
LADDER STORAGE / RACKS		
3365-0028	Hard Suction Storage Rack. Driver side compartment top. Includes spring hold downs and scuff plates behind spring mounts (as applicable).	1
3365-0035	Hard Suction Storage Rack. Officer side compartment top. Includes spring hold downs and scuff plates behind spring mounts (as applicable).	1
3365-0049	Brand of ladders capable of being carried on unit to be Alco-Lite.	1
3365-0087-Z71	The length of ladders capable of being stored shall be the following: 24' 2-section, 14' roof ladder and 10' attic ladder w/shoes.	1
3365-0149-O97	Storage tunnel capable of holding: (1) 2-section, (1) roof, (1) attic, (2) pike poles, (1) backboard in Officer side storage tunnel.	1
HANDRAILS / STEPS		
3110-0099-524	NFPA hose bed access ladder. Zico model RL12 for increased visibility of rear outboard body mounted DOT/NFPA lighting. Includes required step lights and additional hand rail(s) if applicable. Location: rear of body driver side.	1
3330-0073	Step rear intermediate. Locate above B1, includes handrail (in place of horizontal hosebed handrail).	1

3330-0158	Step below side intake / discharge panel (PR). Gator grip diamond plate. Each location requires a minimum of (1) handrail / handhold per NFPA. eMAX only.	1
MISC BODY OPTIONS		
3090-0002	OAH. Unit has no overall height restrictions.	1
3090-0004	OAL. Unit has no overall length restrictions.	1
3090-0007	The hose bed is to have NFPA capacity.	1
3340-0004	Hosebed above the booster tank. Includes forward hosebed and tower(s) cover plate work (as applicable). Hosebed adjustable divider extrusion rearward of the furthest tower is to run full width of the hosebed (as is practical with other hosebed mounted equipment).	1
3340-0035	Divider Long. To run full length of hose bed (front to rear).	1
3340-0049	Hosebed storage pan. Locate in forward area of hosebed.	1
3340-0058	Recessed fuel fill driver side wheel well.	1
3340-0075	Body mainframe and hosebed side assemblies for a 90" high body.	1
3340-0093	Mud flaps, rear, black with E-ONE logo.	1
3340-0110	The rear of each hose bed divider to have a hand hold cut-out(s).	1
3340-0282-I06	Cab tilt switch and manual jack to be located: R1 low on forward wall.	1
3340-0302	Long hose bed divider(s) to be held short to allow for adjustability of the divider(s) with hose bed preconnect(s).	1
3340-0486	Diamond plate single axle wheel well. Includes bolt-on composite wheel well liners and bolt-on polished alum fenderettes.	1
3340-0494	Rubrail for the body.	1
3340-0586	Storage pan over eMAX transverse storage area(s).	1
3340-0681	Body mainframe layout line to be 24". Includes body and all applicable modules.	1
SCBA BOTTLE STORAGE		
3320-0007	SCBA Bottle Storage. (7) E-ONE SCBA bottle storage with hinged doors (doors to match wheel well material) with push button latches. (4) officer side and (3) driver side in wheel well area.	1
3320-0100	Strap(s), loop style to retain SCBA bottle(s). Locate one per bottle in each exterior storage compartment.	7
PUMPS		
4005-0031	Rating 1500 GPM.	1
4005-0131	E-ONE 1250-1500 GPM pump, single stage.	1
PUMP CERTIFICATION		
4475-0000	Pump certification 750-2250 GPM	1
PUMP OPTIONS		

4015-0053-198	Steamers to be Flush + 1". Location: driver's side.	1
4015-0053-199	Steamers to be Flush + 1". Location: officer's side.	1
PUMP OPTIONS		
4015-0098	Manual operated master pump drain. The master drain shall be clearly marked and placed in accessible location on pump panel.	1
4015-0133	Anode for Darley pump - (1) intake side.	1
4015-0210	Pump cooler with Innovative Control 1/4 turn valve with "T" handle and label.	1
INTAKES		
4440-0147	2.5" Left Intake Akron Manual Valve With Integral 30 Degree Chrome Droop.	1
INTAKE OPTIONS		
4445-0048	Intake pressure relief valve, Task Force Tips.	1
DISCHARGES AND PRECONNECTS		
4415-0018	2.5" left front hose bed discharge Akron manual valve.	1
4415-0041	3" Deck Gun Discharge, Akron manual valve.	1
4415-0065	1.5" Double Speedlay with Akron Manual Valves.	1
4415-0161-581	2.5" Left Panel Discharge Akron Manual Valve w/30 Degree Chrome Droop. Location: left side discharge 1.	1
4415-0161-582	2.5" Left Panel Discharge Akron Manual Valve w/30 Degree Chrome Droop. Location: left side discharge 2.	1
4415-0164-584	2.5" Right Panel Discharge Akron Manual Valve w/30 Degree Chrome Droop. Location: right side discharge 2.	1
4415-0923-583	4" Right Pump Panel Discharge with 3" Akron Manual Valve. Include a 4"FNST swivel x 4"MNST 30 degree droop adapter, and cap. Location: right side discharge 1.	1
4417-0106-685	Deck gun piping to be positioned driver side of hose bed storage pan.	1
DISCHARGE OPTIONS		
4417-0175	Innovative Controls push/pull valve controls with locking T handles.	1
4417-0176	Innovative Controls 3/4" bleeder/drain valve include lift lever with ergonomic grip.	8
4417-0185	Innovative Controls discharge and intake bezels with integral color code and verbiage for side mount pump panel.	1
PRESSURE GOVERNORS		
4465-0011	Class 1 TPG pressure governor. Includes, water, oil, volt and tachometer.	1
GAUGES		
4435-0083	Innovative Controls 10 LED SL series water tank level gauge. On pump panel.	1
4435-0246	2.5" Innovative Controls stainless steel case pressure gauge (0-400) with color code	8

	bezel.	
4435-0247	4" Innovative Controls stainless steel case master pressure gauges with bezel. Intake 30-0-400, and discharge 0-400.	1
ELECTRICAL SYSTEMS		
5010-0013-Y83	Vehicle data recorder - 2009 NFPA compliant. Includes occupant detection with display. Display location: inboard on driver's side overhead console.	1
5010-0036	V-MUX Electrical system for pumper / tanker / rescue.	1
5010-0059-339	VFD Text display for V-MUX electrical system. Location: center of dash.	1
LIGHT BARS		
5300-0055	Light bar Whelen Freedom model FN72QLED 72" LED with MKEZ7 mounts and clear lenses. Location: Centered on the front cab roof.	1
WARNING LIGHT PACKAGES		
5550-0059-535	Whelen Super LED lower level warning light package. Includes (8) red 600 LED light heads and (2) red 500 LED light heads w/chrome flanges. Locate side facing lights: at forward most position, centered in rear wheel well, and side facing at rear of body in rubrail if equipped.	1
WARNING LIGHTS		
5600-0078-479-06	Whelen Super LED beacon (PR) model L31H with Red domes. Location rear upper body on aerial style brackets.	1
5600-0105-170	Hazard (door ajar) light 2" LED. Location: center overhead.	1
SIRENS		
5500-0015	Whelen model 295SLSA1 siren with microphone (replaced 295HFSA1).	1
5500-0024-170	The electronic siren control is to be located on the center overhead.	1
SPEAKERS		
5510-0029-209	Speaker, Federal Signal Dynamax ES100 with "E-ONE" grille through bumper. Location: driver side front bumper.	1
DOT LIGHTING		
5150-0017	License plate light LED with chrome housing located at the rear of the body.	1
5150-0025	Marker light LED body/cab package. E-One custom cab and pumper or tanker body only.	1
5150-0032	Bracket license plate at rear of body.	1
5150-0056	Whelen 600 series LED vertical mount tail lights. Includes LED stop/tail, arrow turn and back-up lights with vertical Cast 3 housing and weatherproof connectors.	1
LIGHTS - COMPARTMENT, STEP & GROUND		
5380-0144	Compartment light package Amdor Luma-Bar LED for medium bodies. Includes two lights per compartment (four if transverse).	1

5380-0182	Ground light package EON LED - large.	1
LIGHTS - DECK AND SCENE		
5390-0007	Deck/scene light circuit wiring through chassis reverse. Requires rear deck or scene light.	1
5390-0076	Hose bed light Truck-Lite LED model 81380. Locate at front of hose bed. Switched with work light switch in cab.	1
5390-0152-396	Whelen 600 series gradient Super LED surface mounted scene lights (PR) with weatherproof connectors. Switch in cab (driver and officer side lights switched separately). Locate (1) each side rear compartment face up high.	1
LIGHTS - NON-WARNING		
5400-0003	Engine compartment light (EA).	1
5400-0010	Incandescent pump compartment light (EA).	1
5400-0054	Spotlight Specialty 2150 hand held located on officer's side of cab dash w/12V receptacle.	1
5400-0137	Pump panel LED light package for side mount eMAX. Includes (6) TecNiq EON lights with S/S housings, located (3) each side above lower side intake/discharge panels. Includes S/S light shields. SM eMAX only.	1
CONTROLS / SWITCHES		
5100-0000-199	Foot switch to control air horns located officer's side.	1
5100-0007-198	Foot switch to control electronic siren located driver's side.	1
MISC ELECTRICAL		
5110-0017	Back-up alarm 97 dB.	1
LIGHTS - QUARTZ		
5450-0123-429	Light Whelen Pioneer Plus LED model PFP2 12V with PBAPEDD pedestal mount. Includes switch in cab (side facing lights switched separately). Location(s): driver side forward compartment top.	1
5450-0123-431	Light Whelen Pioneer Plus LED model PFP2 12V with PBAPEDD pedestal mount. Includes switch in cab (side facing lights switched separately). Location(s): officer side forward compartment top.	1
HAND TOOLS		
7600-0005	Pike Pole Fiberglass 6'.	1
7600-0007	Pike Pole Fiberglass 10'.	1
HOSE / NOZZLES		
7700-0004	Hard suction hose 6" X 10' with Pyrolite couplings.	2
GROUND LADDERS		
7800-0007	Alco-Lite PRL-14' roof ladder.	1

7800-0016	Alco-Lite PEL-24' 2-section extension ladder.	1	
7800-0032	Alco-Lite FL-10, 10' folding ladder w/safety shoes.	1	
MISC LOOSE EQUIPMENT			
7900-0010	Chrome Barrel Strainer 6" NST.	1	
7900-0014	DOT Required Drive Away Kit - Kit includes three (3) triangular warning reflectors with carrying case. This kit is for the end user and is to remain with the truck.	1	
EXTERIOR PAINT			
8100-0071	Undercoating E-ONE.	1	
8100-0116	Rear body surface to have a sanded finish (not painted job color). Includes hinged doors that do not have discrete sales codes and removable panels.	1	
8100-0176-000-17	Paint E-ONE chassis cab - Sikkens paint. Color: FLNA3225E-1 Red.	1	
8100-0182-000-17	Paint Body - Small - For Pumpers, Rear Mounts, S/A Tankers/Wetsides and Rescues. Sikkens paint. Color: FLNA3225E-1 Red.	1	
8100-0186-000-39	Paint exterior surface of outer steel wheels. Sikkens paint. Color: Job Color.	1	
INTERIOR PAINT			
8150-0011	The interior of the cab to be painted Zolatone gray.	1	
STRIPING			
8300-0002-334-12	NFPA Scotchlite Stripe - 4" wide and straight on front/sides of cab and sides/rear of body. Color: White. Location: bottom of stripe flush with top of bumper and straight back.	1	
8300-0042	White rubrail scotchlite insert.	1	
8300-0084-000-72	Chevron "A" style 6" printed sheet Scotchlite striping full width on rear of body. Includes rear facing extrusions, panels and doors. Colors to be Yellow/Red.	1	
WARRANTY / STANDARD & EXTENDED			
9100-0000	Standard 1 Year Warranty.	1	
9100-0003	Lifetime Frame Warranty.	1	
9100-0004	10 Year/100,000 Mile Structural Warranty for Alum Cab / Body - Statement of Warranty.	1	
9100-0005	10 Year Stainless Steel Plumbing Warranty - Statement of Warranty.	1	
9100-0019	10 Year Limited Paint and Perforation Warranty - For Sikkens Paint.	1	
SUPPORT, DELIVERY, INSPECTIONS AND MANUALS			
9300-0009	Manuals, Operator and Service CD-ROM.	1	
9300-0016	Approval Drawings-Standard.	1	
9300-0316	Fire Apparatus Safety Guide published by FAMA, latest edition.	1	
PRICE	2016 E-ONE EMAX PUMPER - TYPHOON CUSTOM CHASSIS		$367,120

STATE OF OHIO TERM SCHEDULE

4200 SURFACE RD
COLUMBUS, OH 43228

Quote No: 57489

3/13/2015

Quote Rev:20 Drawing Rev:5

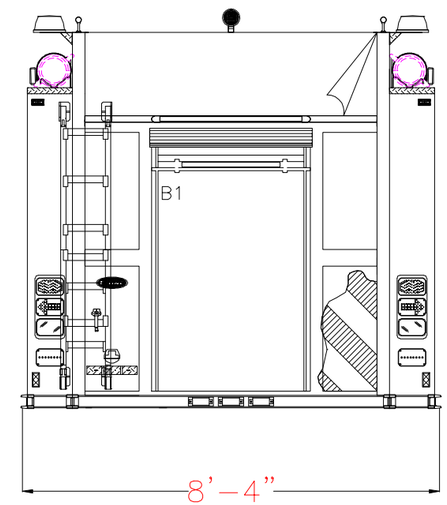

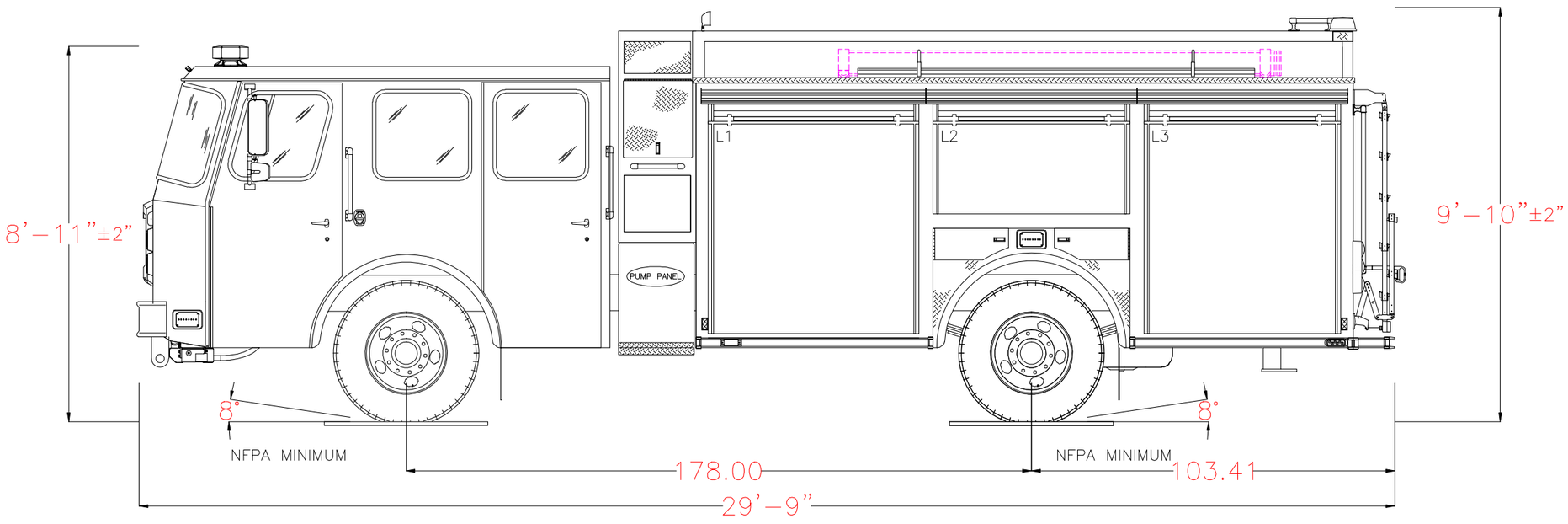

POWERED BY EZDRAW

Notice: This drawing provides a GENERAL REPRESENTATION of the vehicle configuration and should be used for evaluation purposes. The respective dimensions shown,including overall height and length, are estimates and may vary due to manufacturing processes. All other items such as lighting and fixtures, plumbing, compartmentation, and other generally assembled details are shown for REFERENCE ONLY and may not be a direct reflection of the final truck configuration. In ALL situations where this drawing may conflict with the specifications, THE SPECIFICATIONS, AS REFLECTED IN THE APPROVED SHOP ORDER, SHALL PREVAIL. Unless otherwise specified, the proposed apparatus will be manufactured to the latest NFPA recommendations as well as other applicable federally regulated safety regulations. E-One reserves the right to engineer and incorporate design improvements and changes without notice, while adhering to the intent of the specification.

1500 GPM PUMP 0 TOTAL VOLUME 0 TOTAL FOAM	HOSE LOADS :

	OPENING		INTERIOR DIMENSIONS				
COMPT.	WIDTH	HEIGHT	WIDTH	LOWER HEIGHT	LOWER DEPTH	UPPER HEIGHT	UPPER DEPTH
L1	58	59.75	60	30	26	26.75	26
L2	54	25.75	56	N/A	N/A	26.75	26
L3	54	59.75	56	30	26	26.75	26
R1	58	59.75	60	30	26	26.75	12
R2	54	25.75	56	N/A	N/A	26.75	12
R3	54	59.75	56	30	26	26.75	12
B1	36	45	38	30	26	N/A	N/A

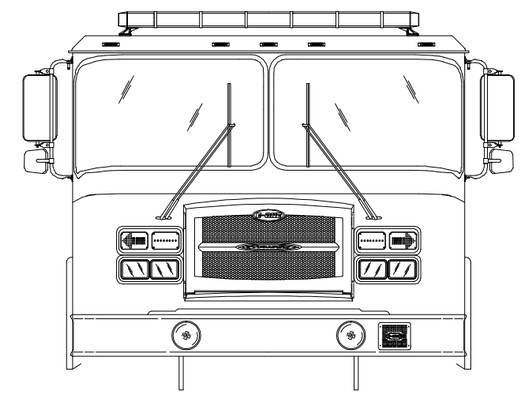

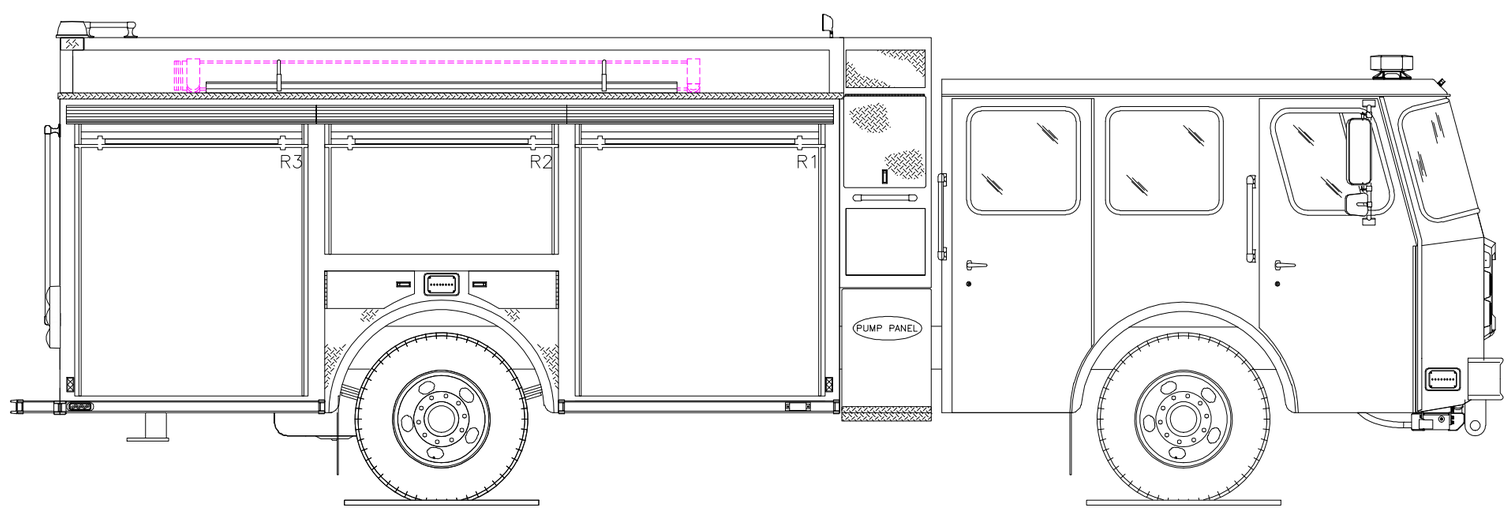

POWERED BY EZDRAW

Fire Apparatus Quotation for:
STATE OF OHIO TERM SCHEDULE

Quotation Number: 57486 Rev: 20

Unit Description: PMPR-CYC2

Quote Description: Pumper, Cyclone II

Salescode	Extended Description	Qty
TESTING COMPLIANCE STANDARD		
1001-0015	The E-ONE supplied components of the vehicle shall meet the requirements of NFPA 1901, 2009 edition.	1
BUMPERS		
1160-0000	Bumper 10" stainless steel.	1
1160-0011	4" Front Bumper Extension.	1
FRAME ASSEMBLY		
1250-0003	Frame 10.25 x 3.5 x .375 chassis.	1
AXLE OPTIONS		
1025-0011	Meritor FL-943 front axle 20,000 lb.	1
1025-0016	Meritor RS-24-160 single rear axle 24,000 lb. capacity.	1
1025-0028	Koni shock absorbers for front axle - adjustable.	1
SUSPENSIONS		
1070-0001	Rear suspension springs rated equal to the capacity of the axle.	1
WHEEL OPTIONS		
1050-0000	Steel wheels for front axle (2).	1
1050-0002	Steel wheels for rear axle (4).	1
1050-0007	Front axle wheel trim kit. Includes stainless steel lug nut covers (chrome plated plastic if applicable) and center cap with E-ONE logo. Note: Center cap will have an inspection port IPO a logo if equipped with Stemco oil seals.	1
1050-0008	Rear axle (single) wheel trim kit. Includes stainless steel lug nut covers (chrome plated plastic if applicable) and center cap with E-ONE logo. E-ONE custom chassis w/steel wheels will have chrome plated plastic lug covers.	1
TIRE OPTIONS		

1060-0015	Four Michelin 11R rear tires with XDN2 mud and snow tread.	1
1060-0046	Two Michelin 425 tires model XFE for front axle.	1
1060-0117	RWC AirGuard LED tire pressure monitoring valve stem caps (6) for single rear axle applications.	1
BRAKE SYSTEMS		
1100-0000	16-1/2" x 6" S-cam brakes with ArvinMeritor automatic slack adjusters for front axle.	1
1100-0002	ArvinMeritor 16-1/2" x 7" S-cam brakes with cast brake drums for a single rear axle.	1
1100-0005	Brake system air 4X2/4X4.	1
1100-0006	Parking brake release mounted on the driver's side lower dash.	1
AIR SYSTEM OPTIONS		
1110-0000-001	Inlet for air system. Location: driver door jamb.	1
1110-0002	Air dryer Bendix AD-9.	1
1110-0006	Air lines nylon.	1
1110-0041	Air horns Grover recessed in bumper (PR).	1
ENGINES & TRANSMISSIONS		
1200-0017	Push-button transmission shift selector.	1
1200-0021	TransSynd synthetic transmission fluid for EVS 4000.	1
1200-0097	Electronic limiting of speed to 68 MPH maximum. Note: Max speed may be set at 65 MPH due to tire rating.	1
1200-0238	Eng/Trans Cummins ISX12 450HP with EVS4000 transmission. 2013 EPA Compliant.	1
SECONDARY BRAKING		
1125-0002	Jacobs engine compression brake.	1
1125-0023	Transmission to seek second gear when Jacobs engine brake or Telma retarder is engaged. N/A with Trans retarder.	1
COOLING PACKAGE		
1800-0013	Cooling system for use with Cyclone II X, Typhoon X, and Quest chassis. For use with 2010/2013 EPA engines. Includes coolant recovery system.	1
FUEL SYSTEMS		
1350-0003	Fuel system 50 gallon.	1
1350-0012-670	Fuel shut-off valve. Location: one (1) inlet side of OEM fuel filter.	1
1350-0022	Fuel line hose rubber.	1
ALTERNATOR		
1700-0005	Alternator Leece Neville 320 amp. 320 amp SAE/275 amp NFPA.	1

BATTERIES		
1400-0002	Battery four group 31 1000 CCA.	1
CHASSIS OPTIONS		
1680-0005	Thermatic fan clutch.	1
1680-0007	Drivelines 1810. Required on 1550 lb/ft torque or greater engines.	1
1680-0011	Tow eyes rear below body, painted.	1
1680-0042	Tow hooks front painted in the down position.	1
1680-0250-M58	Diesel Exhaust Fluid (DEF) 5 gallon tank for 2013 EPA engines. Location: left side below rear of cab.	1
1680-0284	Radiator mounted power steering cooler.	1
CAB MODEL		
1520-0008	Cyclone II X medium cab with 58" CA	1
CAB ROOF TYPE		
1615-0010	Cab roof to be "flat" (non-vista).	1
CAB BADGE PACKAGE		
1610-0000	Cab and body to have applicable E-ONE logos.	1
CAB DOOR OPTIONS		
1550-0003	Rear crew cab doors in the medium position.	1
1550-0005	Driver and officer cab door windows. Include forward vent windows.	1
1550-0011	Rear crew cab door windows. Includes manual roll-down actuation. Not available on Typhoon or CII with paddle style door latching.	1
1550-0016	Cab door panels ABS.	1
1550-0025	All cab doors shall have "L" style exterior latches.	1
1550-0027	Front cab door windows to have manual actuation.	1
1550-0038-659	(4) LED cab step area lighting. Locate each light on each cab door in the inboard position. Lights to be switched with door ajar.	1
1550-0044	All cab door kick plates to be made from diamond plate aluminum.	1
1550-0059-000-G6	Reflective Red/Lemon Yellow printed striping positioned in the "A" formation located on the cab door panels.	1
1550-0077	Interior cab door locks - manual. Will have manual actuation from each respective door. Includes barrel style key lock on each exterior cab door.	1
1550-0084	All cab exterior access doors to have 1250 keyed locks.	1
MIRRORS		
1670-0003	Velvac 2010 mirrors. Door mounted west coast style with remote control and heat.	1

MISC EXTERIOR CAB OPTIONS		
1550-0020	Windows cab side fixed driver's side.	1
1550-0033	Windows cab side fixed officer's side.	1
1675-0022	Pair of 18" handrails located just behind driver and officer front door one each side.	1
1675-0023	Pair of 18" handrails located just behind driver and officer rear door (ALS doors if equipped) one each side.	1
1675-0030	Mud flaps, front, black with E-ONE logo.	1
1675-0047	Rear cab wall to be 3/16" aluminum diamond plate.	1
1675-0201	Large radius cab wheel well. Includes bolt-on ajustable wheel well trim.	1
1675-0202	Mounting plate for battery charger receptacle, indicator and air inlet (if applicable). Plate to be removable brushed stainless steel.	1
HVAC		
1515-0018	Air conditioning for the Typhoon X, CII X and Quest with roof top mounted condenser.	1
1515-0053	Controls for heating and air conditioning shall be located in the center dash area. (Lower area on Typhoon and CII with severe duty dash)	1
SEATS		
1510-0003	Seats, Inc. brand 911 cab seats.	1
1510-0008	Seat color gray.	1
1510-0035-147	Universal air pack bottle bracket (EA). Location: officer's seat.	1
1510-0035-148	Universal air pack bottle bracket (EA). Location: rear facing driver's side.	1
1510-0035-215	Universal air pack bottle bracket (EA). Location: rear facing officer's side.	1
1510-0038	Driver seat 911 air ride.	1
1510-0042	Officer seat to be 911 fixed SCBA.	1
1510-0050	Rear facing 911 seat with SCBA driver's side.	1
1510-0053	Rear facing 911 seat with SCBA officer's side.	1
1510-0234	Seat cover material Turnout Tuff.	1
1685-0031	Seating capacity tag of four occupants.	1
MISC INTERIOR CAB OPTIONS		
1685-0000	Cab interior gray. Does not include engine cover or seat color.	1
1685-0005	Lexan sun visors, driver and officer's side overhead.	1
1685-0168	ABS Dash package. Includes center and officer side dash, lower kick panels and "A" post covers.	1
1685-0187	Severe duty engine cover, molded polyurethane.	1
CAB ELECTRICAL OPTIONS		

1750-0013-172	Turn signal Whelen 600 LED amber arrow pair located upper headlight bezel.	1
1750-0024-179-04	Auto-Eject receptacle inlet 20 amp located outside driver's door next to handrail with a Yellow cover.	1
1750-0029	Switch horn button two position DOT/air horn.	1
1750-0046-195	Cab Headlights. Position: lower.	1
1750-0072-593	12 VDC (or 24VDC) electrical outlet in the cab wired battery hot. Location: officer side dash.	2
1750-0075	English dominant main cab gauge cluster.	1
1750-0158	Dome Lts Red/White LED. Package includes two lights mounted in the front and two mounted in the rear of the cab. White light wired through door and light assembly switch. Red light through light assembly switch.	1
1750-0188	DPF regeneration override switch.	1
1750-0198-A31	Battery charger to be located behind driver's seat.	1
1750-0343	Battery charger E-ONE LPC 20. 120 volt inlet, 20 amp output.	1
1750-0435	Halogen cab headlights. TyphoonX, CIIX and QST2 only.	1
BODY COMPT LEFT SIDE		
3100-0095	Driver side body with full height 36" wide forward and 36" wide rearward compartmentation. Includes (1) 56" wide compartment over the wheel well.	1
BODY COMPT RIGHT SIDE		
3120-0004	Officer half side body with 36" wide forward and 36" wide rearward compartmentation. Includes adjustable ladder tracks.	1
BODY COMPT REAR		
3110-0005	Full Height Rear Compartment. Includes smooth plate panels.	1
3110-0034	Upper rear compartment depth to be shallow.	1
3340-0115	Bolt-on diamond plate 16" tailboard (full width of body). Includes (2) squared off beavertails (no stanchions) with removable outer panels and handrails- (2) vertical on trailing edge of body and horizontal mounted handrail(s) below hosebed.	1
DOORS		
3300-0017-004	Door roll up short (up to 45") with satin finish ROM. Location(s): L2.	1
3300-0017-015	Door roll up short (up to 45") with satin finish ROM. Location(s): R1.	1
3300-0017-016	Door roll up short (up to 45") with satin finish ROM. Location(s): R2.	1
3300-0019-003	Door roll up tall (greater than 45") with satin finish ROM. Location(s): L1.	1
3300-0019-005	Door roll up tall (greater than 45") with satin finish ROM. Location(s): L3.	1
3300-0019-027	Door roll up tall (greater than 45") with satin finish ROM. Location(s): B1.	1
SHELVES		

3370-0025-099	Permanent shelf. Locate in L1 at offset (above extrusion if applicable).	1
3370-0025-100	Permanent shelf. Locate in L3 at offset (above extrusion if applicable).	1
3370-0052-I41	Adjustable shelf (J-Style) for non-transverse compartments 16" or greater in depth. Location: B1 lower.	1
3370-0054-I41	Tracks for adjustable shelf and/or adjustable tray in compartments 16" or greater in depth. Location: B1 lower.	1
COVERS		
3305-0007-000-02	Vinyl Red hose bed cover with attached rear flap(s).	1
3305-0008-000-02	Vinyl Red crosslay cover with attached side flaps.	1
PUMP MODULE		
3130-0167	Pump module to be 76" wide (side to side). Includes upper, lower, crosswalk, speedlay and tranverse module(s) if applicable.	1
3130-0523	Side mount pump module. Extruded aluminum with runningboards.	1
3130-0532	Pump panel opening is 39" wide. Pumper / tanker only.	1
3130-0539	Pump module height is 75". Pumper / tanker only.	1
PUMP PANELS		
3134-0016	Stainless steel driver and officer side pump panels.	1
3134-0064	The gauge panel(s) on the driver side of the Side Mount module to be hinged upward. Panel(s) to include (2) mechanical/pneumatic (as applicable to panel size) hold opens and latches.	1
3134-0143	Officer side pump panel to be vertical hinged on forward extrusion. Panel to be (3) pieces with upper (2) panels secured in the closed position with push button latches. Upper panel to be held open with gas shock.	1
MISC PUMP PANEL OPTIONS		
4460-0003	Pump panel tags color coded per NFPA compliance.	1
PUMP MODULE OPTIONS		
3136-0058	E-ONE logo mounted one each side on pump module/preconnect panels. Logos to be sized as applicable to available space on panels.	1
3136-0138	Pump module storage pan.	1
3136-0141	Crosslay double 4.25" wide single stack to hold up to 200' of 2.0" DJ (each).	1
WATER TANK		
4010-0099	Fill tower(s) to be located offset to officer side of water tank.	1
4010-0174	530 Gallon "T" Water Tank. UPF Poly III color fill towers. Note: Any foam cell(s) will reduce the overall water capacity.	1
TANK PLUMBING		
4450-0010	2" tank fill Akron manual valve.	1

4450-0119	3" tank to pump Akron manual valve w/4" tank connection.	1
LADDER STORAGE / RACKS		
3365-0025-515	Attic ladder mounting brackets (PR). Locate officer side compartment top.	1
3365-0028	Hard Suction Storage Rack. Driver side compartment top. Includes spring hold downs and scuff plates behind spring mounts (as applicable).	1
3365-0031	Hard Suction Storage Rack. Officer side in adjustable track above ladders (if applicable). Includes spring hold downs and scuff plates.	1
3365-0034-515	(2) aluminum pike pole storage tubes. Locate officer side compartment top.	1
3365-0049	Brand of ladders capable of being carried on unit to be Alco-Lite.	1
3365-0086-B99	The pike pole(s) capable of being stored are to be the following length: (2) 10' pike poles.	1
3365-0087-C57	The length of ladders capable of being stored shall be the following: 24' 2-section and 14' roof ladder.	1
3365-0168	Pike pole tube secondary retaining pin(s) with cable. Locate on end of pike pole tube(s).	1
HANDRAILS / STEPS		
3330-0103	Dual lighted LED folding steps rear NFPA. Includes folding steps on driver side (staggered stepped as applicable with tailboard depth) for NFPA hosebed access and handrail mounted on driver side upper hosebed side (as applicable).	1
3330-0105-060	Dual lighted LED folding step. Location: officer side front compartment face. Each location requires a minimum of (1) handrail per NFPA.	1
3330-0105-062	Dual lighted LED folding step. Location: driver side front compartment face. Each location requires a minimum of (1) handrail per NFPA.	3
MISC BODY OPTIONS		
3090-0002	OAH. Unit has no overall height restrictions.	1
3090-0004	OAL. Unit has no overall length restrictions.	1
3090-0007	The hose bed is to have NFPA capacity.	1
3340-0004	Hosebed above the booster tank. Includes forward hosebed and tower(s) cover plate work (as applicable). Hosebed adjustable divider extrusion rearward of the furthest tower is to run full width of the hosebed (as is practical with other hosebed mounted equipment).	1
3340-0015	Diamond plate single axle wheel well. Includes bolt-on composite wheel well liners and aluminum trim fenderettes.	1
3340-0035	Divider Long. To run full length of hose bed (front to rear).	1
3340-0058	Recessed fuel fill driver side wheel well.	1
3340-0074	Body mainframe and hosebed side assemblies for a 85" high body.	1
3340-0093	Mud flaps, rear, black with E-ONE logo.	1
3340-0110	The rear of each hose bed divider to have a hand hold cut-out(s).	1

3340-0128	Bolt-in partition walls. Locate in lower rear compartment transverse area. Partitions to separate the side rear compartments from the rear compartment.	1
3340-0145	Rub rail for the body and pump area module(s).	1
3340-0681	Body mainframe layout line to be 24". Includes body and all applicable modules.	1
SCBA BOTTLE STORAGE		
3320-0020	SCBA Bottle Storage. (4) Fire Shopp SCBA bottle storage with hinged doors with push button latches. (2) officer side and (2) driver side in wheel well area.	1
3320-0100	Strap(s), loop style to retain SCBA bottle(s). Locate one per bottle in each exterior storage compartment.	4
PUMPS		
4005-0016	Hale QMAX 1000-2250 GPM single stage pump.	1
4005-0031	Rating 1500 GPM.	1
PUMP CERTIFICATION		
4475-0000	Pump certification 750-2250 GPM	1
PUMP OPTIONS		
4015-0008	Zinc anodes for Hale pump (PR), (1) discharge side and (1) intake side.	1
4015-0022	Mechanical pump seal - Hale.	1
4015-0052-198	Steamers to be Flush. Location: driver's side.	1
4015-0052-199	Steamers to be Flush. Location: officer's side.	1
4015-0098	Manual operated master pump drain. The master drain shall be clearly marked and placed in accessible location on pump panel.	1
4015-0210	Pump cooler with Innovative Control 1/4 turn valve with "T" handle and label.	1
INTAKES		
4440-0005	2.5" Left Intake Akron Manual Valve.	1
INTAKE OPTIONS		
4445-0016	Intake relief valve, Hale 2.5".	1
DISCHARGES AND PRECONNECTS		
4415-0012-654	1.5" crosslay with Akron manual valve. Location: crosslay 1 & 2.	2
4415-0014-581	2.5" Left Pump Panel Discharge Akron Manual Valve. Location: left side discharge 1.	1
4415-0014-582	2.5" Left Pump Panel Discharge Akron Manual Valve. Location: left side discharge 2.	1
4415-0016-584	2.5" Right Pump Panel Discharge Akron Manual Valve. Location: right side discharge 2.	1
4415-0022-350	2.5" Left Rear Discharge Akron Manual Valve. Location: left rear discharge.	1
4415-0041	3" Deck Gun Discharge, Akron manual valve.	1

4415-0054-583	4" Right Pump Panel Discharge with 3" Akron Manual Valve (Waterous pumps noted location to be forward lower port). Location: right side discharge 1.	1
4417-0106-L65	Deck gun piping to be positioned centered in deck gun channel.	1
DISCHARGE OPTIONS		
4417-0175	Innovative Controls push/pull valve controls with locking T handles.	1
4417-0176	Innovative Controls 3/4" bleeder/drain valve include lift lever with ergonomic grip.	8
4417-0185	Innovative Controls discharge and intake bezels with integral color code and verbiage for side mount pump panel.	1
PRESSURE GOVERNORS		
4465-0011	Class 1 TPG pressure governor. Includes, water, oil, volt and tachometer.	1
GAUGES		
4435-0083	Innovative Controls 10 LED SL series water tank level gauge. On pump panel.	1
4435-0246	2.5" Innovative Controls stainless steel case pressure gauge (0-400) with color code bezel.	8
4435-0247	4" Innovative Controls stainless steel case master pressure gauges with bezel. Intake 30-0-400, and discharge 0-400.	1
ELECTRICAL SYSTEMS		
5010-0013-Y83	Vehicle data recorder - 2009 NFPA compliant. Includes occupant detection with display. Display location: inboard on driver's side overhead console.	1
5010-0036	V-MUX Electrical system for pumper / tanker / rescue.	1
5010-0059-339	VFD Text display for V-MUX electrical system. Location: center of dash.	1
LIGHT BARS		
5300-0055	Light bar Whelen Freedom model FN72QLED 72" LED with MKEZ7 mounts and clear lenses. Location: Centered on the front cab roof.	1
WARNING LIGHT PACKAGES		
5550-0059-535	Whelen Super LED lower level warning light package. Includes (8) red 600 LED light heads and (2) red 500 LED light heads w/chrome flanges. Locate side facing lights: at forward most position, centered in rear wheel well, and side facing at rear of body in rubrail if equipped.	1
WARNING LIGHTS		
5600-0078-479-06	Whelen Super LED beacon (PR) model L31H with Red domes. Location rear upper body on aerial style brackets.	1
5600-0105-170	Hazard (door ajar) light 2" LED. Location: center overhead.	1
SIRENS		
5500-0015	Whelen model 295SLSA1 siren with microphone (replaced 295HFSA1).	1

5500-0024-170	The electronic siren control is to be located on the center overhead.	1
SPEAKERS		
5510-0029-209	Speaker, Federal Signal Dynamax ES100 with "E-ONE" grille through bumper. Location: driver side front bumper.	1
DOT LIGHTING		
5150-0007	Whelen 600 series LED vertical mount tail lights. Includes LED stop/tail, arrow turn and halogen back-up lights with vertical Cast 3 housing and weatherproof connectors.	1
5150-0017	License plate light LED with chrome housing located at the rear of the body.	1
5150-0025	Marker light LED body/cab package. E-One custom cab and pumper or tanker body only.	1
5150-0032	Bracket license plate at rear of body.	1
LIGHTS - COMPARTMENT, STEP & GROUND		
5380-0189	Compartment light package Amdor Luma-Bar LED for small bodies. Includes one light per compartment (two if transverse).	1
5380-0200	Ground light package EON LED - small.	1
LIGHTS - DECK AND SCENE		
5390-0058-395	Deck Lights - Truck-Lite LED model 81380 (PR). Location: rear body/beavertail area on the trailing edge up high.	1
5390-0076	Hose bed light Truck-Lite LED model 81380. Locate at front of hose bed. Switched with work light switch in cab.	1
5390-0102	Crosslay light Truck-Lite LED model 81380. Locate to rear of crosslay (SM) and forward of crosslay (TM as applicable). Switched with work light switch in cab.	1
LIGHTS - NON-WARNING		
5400-0003	Engine compartment light (EA).	1
5400-0010	Incandescent pump compartment light (EA).	1
5400-0054	Spotlight Specialty 2150 hand held located on officer's side of cab dash w/12V receptacle.	1
5400-0092	Weldon pump panel LED light package with (3) lights per side pump panel. Pump panels over 45" may require additional lights. Side mount only.	1
CONTROLS / SWITCHES		
5100-0000-199	Foot switch to control air horns located officer's side.	1
5100-0007-198	Foot switch to control electronic siren located driver's side.	1
MISC ELECTRICAL		
1750-0082-762	12V power distribution module. Includes (6) battery hot and (6) switched hot circuits. 100 amps max (IATS). Location: behind officer's seat.	1
5110-0017	Back-up alarm 97 dB.	1

LIGHTS - QUARTZ		
5450-0290-407	Light Whelen Pioneer model PFP1 12V with internal top raise pole mount. Includes switch accessible to driver. Location: driver side of pump module forward area.	1
5450-0290-408	Light Whelen Pioneer model PFP1 12V with internal top raise pole mount. Includes switch accessible to driver. Location: officer side of pump module forward area.	1
ELBOWS		
7400-0004	Elbow 30 degree chrome swivel w/2.5"FNST x 2.5"MNST.	4
HAND TOOLS		
7600-0005	Pike Pole Fiberglass 6'.	1
7600-0007	Pike Pole Fiberglass 10'.	1
HOSE / NOZZLES		
7700-0004	Hard suction hose 6" X 10' with Pyrolite couplings.	2
GROUND LADDERS		
7800-0007	Alco-Lite PRL-14' roof ladder.	1
7800-0016	Alco-Lite PEL-24' 2-section extension ladder.	1
7800-0032	Alco-Lite FL-10, 10' folding ladder w/safety shoes.	1
MISC LOOSE EQUIPMENT		
7900-0010	Chrome Barrel Strainer 6" NST.	1
7900-0014	DOT Required Drive Away Kit - Kit includes three (3) triangular warning reflectors with carrying case. This kit is for the end user and is to remain with the truck.	1
EXTERIOR PAINT		
8100-0071	Undercoating E-ONE.	1
8100-0089	All applicable pump/pre-connect application modules are to have a sanded finish (not painted job color). Includes upper and lower pump modules, crosswalk module and/or speedlay/pre-connect module (as applicable). Rear mounted body/pump module to be painted job color.	1
8100-0116	Rear body surface to have a sanded finish (not painted job color). Includes	1
EXTERIOR PAINT		
	hinged doors that do not have discrete sales codes and removable panels.	
8100-0176-000-17	Paint E-ONE chassis cab - Sikkens paint. Color: FLNA3225E-1 Red.	1
8100-0182-000-17	Paint Body - Small - For Pumpers, Rear Mounts, S/A Tankers/Wetsides and Rescues. Sikkens paint. Color: FLNA3225E-1 Red.	1
8100-0186-000-39	Paint exterior surface of outer steel wheels. Sikkens paint. Color: Job Color.	1
INTERIOR PAINT		
8150-0011	The interior of the cab to be painted Zolatone gray.	1

STRIPING			
8300-0002-334-12	NFPA Scotchlite Stripe - 4" wide and straight on front/sides of cab and sides/rear of body. Color: White. Location: bottom of stripe flush with top of bumper and straight back.	1	
8300-0042	White rubrail scotchlite insert.	1	
8300-0084-000-72	Chevron "A" style 6" printed sheet Scotchlite striping full width on rear of body. Includes rear facing extrusions, panels and doors. Colors to be Yellow/Red.	1	
WARRANTY / STANDARD & EXTENDED			
9100-0000	Standard 1 Year Warranty.	1	
9100-0003	Lifetime Frame Warranty.	1	
9100-0004	10 Year/100,000 Mile Structural Warranty for Alum Cab / Body - Statement of Warranty.	1	
9100-0005	10 Year Stainless Steel Plumbing Warranty - Statement of Warranty.	1	
9100-0019	10 Year Limited Paint and Perforation Warranty - For Sikkens Paint.	1	
SUPPORT, DELIVERY, INSPECTIONS AND MANUALS			
9300-0009	Manuals, Operator and Service CD-ROM.	1	
9300-0016	Approval Drawings-Standard.	1	
9300-0316	Fire Apparatus Safety Guide published by FAMA, latest edition.	1	
PRICE	2016 E-ONE PUMPER - CYCLONE CUSTOM CHASSIS		$405,493

STATE OF OHIO TERM SCHEDULE

4200 SURFACE RD
COLUMBUS, OH 43228

Quote No: 57486

3/13/2015

Quote Rev:20 Drawing Rev:6

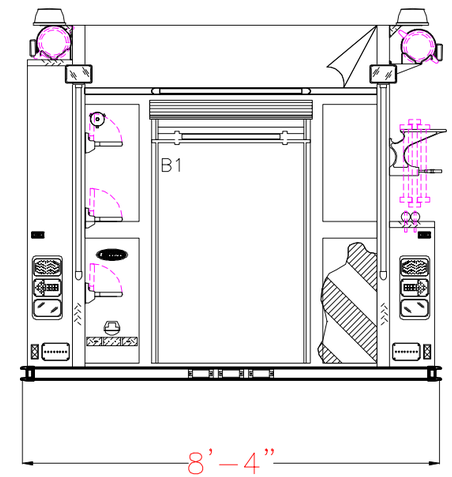

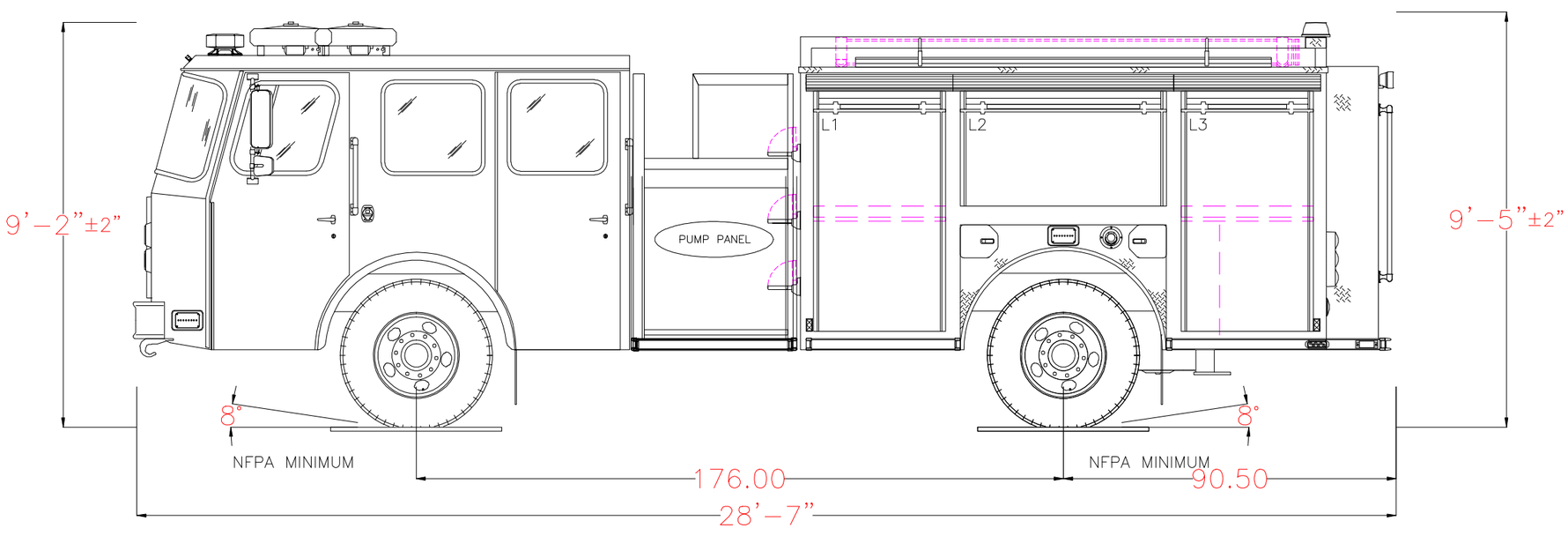

POWERED BY EZDRAW

Notice This drawing provides a GENERAL REPRESENTATION of the vehicle configuration and should be used for evaluation purposes. The respective dimensions shown,including overall height and length, are estimates and may vary due to manufacturing processes. All other items such as lighting and fixtures, plumbing, compartmentation, and other generally assembled details are shown for REFERENCE ONLY and may not be a direct reflection of the final truck configuration. In ALL situations where this drawing may conflict with the specifications, THE SPECIFICATIONS, AS REFLECTED IN THE APPROVED SHOP ORDER, SHALL PREVAIL. Unless otherwise specified, the proposed apparatus will be manufactured to the latest NFPA recommendations as well as other applicable federally regulated safety regulations. E-One reserves the right to engineer and incorporate design improvements and changes without notice, while adhering to the intent of the specification.

1500 GPM HALE QMAXPUMP 0 TOTAL VOLUME 0 TOTAL FOAM	HOSE LOADS :

	OPENING		INTERIOR DIMENSIONS				
COMPT.	WIDTH	HEIGHT	WIDTH	LOWER HEIGHT	LOWER DEPTH	UPPER HEIGHT	UPPER DEPTH
L1	34	59.75	36	30	26	26.75	12
L2	54	25.75	56	N/A	N/A	26.75	12
L3	34	59.75	36	30	26	26.75	12
R1	34	21	36	30	26	N/A	N/A
R2	34	21	36	30	26	N/A	N/A
B1	36	45	38	30	26	24	14

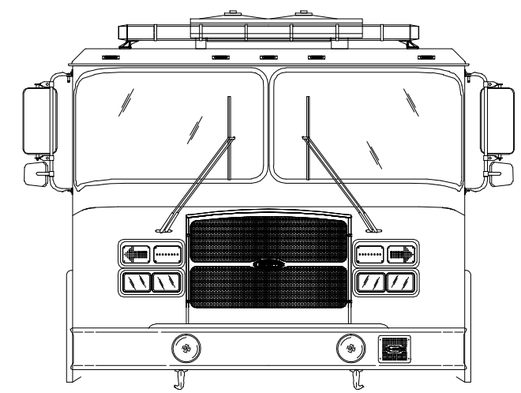

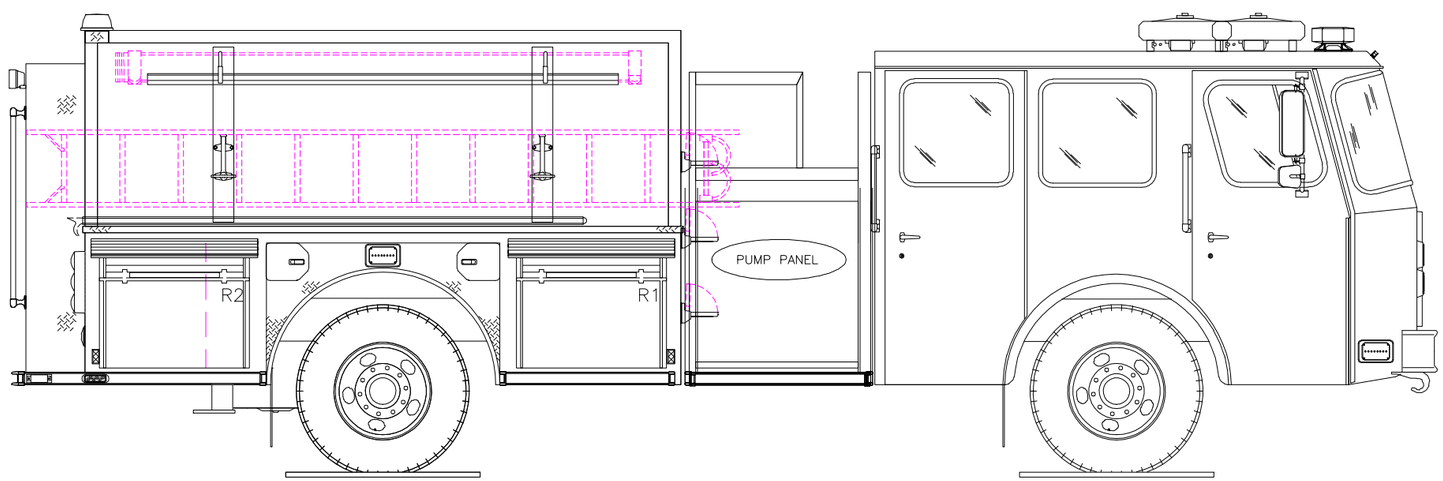

POWERED BY EZDRAW

Fire Apparatus Quotation for:
STATE OF OHIO TERM SCHEDULE

Quotation Number: 57488 Rev: 20

Unit Description: PMPR-CYC2

Quote Description: Pumper, Cyclone II

Salescode	Extended Description	Qty
TESTING COMPLIANCE STANDARD		
1001-0015	The E-ONE supplied components of the vehicle shall meet the requirements of NFPA 1901, 2009 edition.	1
BUMPERS		
1160-0000	Bumper 10" stainless steel.	1
1160-0011	4" Front Bumper Extension.	1
FRAME ASSEMBLY		
1250-0003	Frame 10.25 x 3.5 x .375 chassis.	1
1250-0011	Rear underbody support frame.	1
AXLE OPTIONS		
1025-0011	Meritor FL-943 front axle 20,000 lb.	1
1025-0017	Meritor RS-25-160 single rear axle 27,000 lb. capacity.	1
1025-0028	Koni shock absorbers for front axle - adjustable.	1
SUSPENSIONS		
1070-0001	Rear suspension springs rated equal to the capacity of the axle.	1
WHEEL OPTIONS		
1050-0000	Steel wheels for front axle (2).	1
1050-0002	Steel wheels for rear axle (4).	1
1050-0007	Front axle wheel trim kit. Includes stainless steel lug nut covers (chrome plated plastic if applicable) and center cap with E-ONE logo. Note: Center cap will have an inspection port IPO a logo if equipped with Stemco oil seals.	1
1050-0008	Rear axle (single) wheel trim kit. Includes stainless steel lug nut covers (chrome plated plastic if applicable) and center cap with E-ONE logo. E-ONE custom chassis w/steel wheels will have chrome plated plastic lug covers.	1

TIRE OPTIONS		
1060-0016	Four Michelin 12R rear tires with XDN2 mud and snow tread.	1
1060-0046	Two Michelin 425 tires model XFE for front axle.	1
1060-0117	RWC AirGuard LED tire pressure monitoring valve stem caps (6) for single rear axle applications.	1
BRAKE SYSTEMS		
1100-0000	16-1/2" x 6" S-cam brakes with ArvinMeritor automatic slack adjusters for front axle.	1
1100-0002	ArvinMeritor 16-1/2" x 7" S-cam brakes with cast brake drums for a single rear axle.	1
1100-0005	Brake system air 4X2/4X4.	1
1100-0006	Parking brake release mounted on the driver's side lower dash.	1
AIR SYSTEM OPTIONS		
1110-0000-001	Inlet for air system. Location: driver door jamb.	1
1110-0002	Air dryer Bendix AD-9.	1
1110-0006	Air lines nylon.	1
1110-0041	Air horns Grover recessed in bumper (PR).	1
ENGINES & TRANSMISSIONS		
1200-0017	Push-button transmission shift selector.	1
1200-0021	TransSynd synthetic transmission fluid for EVS 4000.	1
1200-0097	Electronic limiting of speed to 68 MPH maximum. Note: Max speed may be set at 65 MPH due to tire rating.	1
1200-0238	Eng/Trans Cummins ISX12 450HP with EVS4000 transmission. 2013 EPA Compliant.	1
SECONDARY BRAKING		
1125-0002	Jacobs engine compression brake.	1
1125-0023	Transmission to seek second gear when Jacobs engine brake or Telma retarder is engaged. N/A with Trans retarder.	1
COOLING PACKAGE		
1800-0013	Cooling system for use with Cyclone II X, Typhoon X, and Quest chassis. For use with 2010/2013 EPA engines. Includes coolant recovery system.	1
FUEL SYSTEMS		
1350-0003	Fuel system 50 gallon.	1
1350-0012-670	Fuel shut-off valve. Location: one (1) inlet side of OEM fuel filter.	1
1350-0022	Fuel line hose rubber.	1
ALTERNATOR		

1700-0005	Alternator Leece Neville 320 amp. 320 amp SAE/275 amp NFPA.	1
BATTERIES		
1400-0002	Battery four group 31 1000 CCA.	1
CHASSIS OPTIONS		
1680-0005	Thermatic fan clutch.	1
1680-0007	Drivelines 1810. Required on 1550 lb/ft torque or greater engines.	1
1680-0011	Tow eyes rear below body, painted.	1
1680-0042	Tow hooks front painted in the down position.	1
1680-0250-M58	Diesel Exhaust Fluid (DEF) 5 gallon tank for 2013 EPA engines. Location: left side below rear of cab.	1
1680-0284	Radiator mounted power steering cooler.	1
CAB MODEL		
1520-0008	Cyclone II X medium cab with 58" CA	1
CAB ROOF TYPE		
1615-0010	Cab roof to be "flat" (non-vista).	1
CAB BADGE PACKAGE		
1610-0000	Cab and body to have applicable E-ONE logos.	1
CAB DOOR OPTIONS		
1550-0003	Rear crew cab doors in the medium position.	1
1550-0005	Driver and officer cab door windows. Include forward vent windows.	1
1550-0011	Rear crew cab door windows. Includes manual roll-down actuation. Not available on Typhoon or CII with paddle style door latching.	1
1550-0016	Cab door panels ABS.	1
1550-0025	All cab doors shall have "L" style exterior latches.	1
1550-0027	Front cab door windows to have manual actuation.	1
1550-0038-659	(4) LED cab step area lighting. Locate each light on each cab door in the inboard position. Lights to be switched with door ajar.	1
1550-0044	All cab door kick plates to be made from diamond plate aluminum.	1
1550-0059-000-G6	Reflective Red/Lemon Yellow printed striping positioned in the "A" formation located on the cab door panels.	1
1550-0077	Interior cab door locks - manual. Will have manual actuation from each respective door. Includes barrel style key lock on each exterior cab door.	1
1550-0084	All cab exterior access doors to have 1250 keyed locks.	1
MIRRORS		
1670-0003	Velvac 2010 mirrors. Door mounted west coast style with remote control and heat.	1

MISC EXTERIOR CAB OPTIONS		
1550-0020	Windows cab side fixed driver's side.	1
1550-0033	Windows cab side fixed officer's side.	1
1675-0022	Pair of 18" handrails located just behind driver and officer front door one each side.	1
1675-0023	Pair of 18" handrails located just behind driver and officer rear door (ALS doors if equipped) one each side.	1
1675-0030	Mud flaps, front, black with E-ONE logo.	1
1675-0047	Rear cab wall to be 3/16" aluminum diamond plate.	1
1675-0201	Large radius cab wheel well. Includes bolt-on ajustable wheel well trim.	1
1675-0202	Mounting plate for battery charger receptacle, indicator and air inlet (if applicable). Plate to be removable brushed stainless steel.	1
HVAC		
1515-0018	Air conditioning for the Typhoon X, CII X and Quest with roof top mounted condenser.	1
1515-0053	Controls for heating and air conditioning shall be located in the center dash area. (Lower area on Typhoon and CII with severe duty dash)	1
SEATS		
1510-0003	Seats, Inc. brand 911 cab seats.	1
1510-0008	Seat color gray.	1
1510-0035-147	Universal air pack bottle bracket (EA). Location: officer's seat.	1
1510-0035-148	Universal air pack bottle bracket (EA). Location: rear facing driver's side.	1
1510-0035-215	Universal air pack bottle bracket (EA). Location: rear facing officer's side.	1
1510-0038	Driver seat 911 air ride.	1
1510-0042	Officer seat to be 911 fixed SCBA.	1
1510-0050	Rear facing 911 seat with SCBA driver's side.	1
1510-0053	Rear facing 911 seat with SCBA officer's side.	1
1510-0234	Seat cover material Turnout Tuff.	1
1685-0031	Seating capacity tag of four occupants.	1
MISC INTERIOR CAB OPTIONS		
1685-0000	Cab interior gray. Does not include engine cover or seat color.	1
1685-0005	Lexan sun visors, driver and officer's side overhead.	1
1685-0168	ABS Dash package. Includes center and officer side dash, lower kick panels and "A" post covers.	1
1685-0187	Severe duty engine cover, molded polyurethane.	1

CAB ELECTRICAL OPTIONS		
1750-0013-172	Turn signal Whelen 600 LED amber arrow pair located upper headlight bezel.	1
1750-0024-179-04	Auto-Eject receptacle inlet 20 amp located outside driver's door next to handrail with a Yellow cover.	1
1750-0029	Switch horn button two position DOT/air horn.	1
1750-0046-195	Cab Headlights. Position: lower.	1
1750-0072-593	12 VDC (or 24VDC) electrical outlet in the cab wired battery hot. Location: officer side dash.	2
1750-0075	English dominant main cab gauge cluster.	1
1750-0158	Dome Lts Red/White LED. Package includes two lights mounted in the front and two mounted in the rear of the cab. White light wired through door and light assembly switch. Red light through light assembly switch.	1
1750-0188	DPF regeneration override switch.	1
1750-0198-A31	Battery charger to be located behind driver's seat.	1
1750-0343	Battery charger E-ONE LPC 20. 120 volt inlet, 20 amp output.	1
1750-0435	Halogen cab headlights. TyphoonX, CIIX and QST2 only.	1
BODY COMPT LEFT SIDE		
3100-0153	Driver side body with full height 42" wide forward and 56" wide rearward enhanced extended compartmentation. Includes (1) 56" wide compartment over the wheel well.	1
BODY COMPT RIGHT SIDE		
3120-0283	Officer side body with full height 42" wide forward and 56" wide rearward enhanced extended compartmentation. Includes (1) 56" wide compartment over the wheel well and one (1) storage tunnel.	1
BODY COMPT REAR		
3110-0013	Full Height Rear Compartment with Officer Side Storage Tunnel. Includes smooth plate panels and storage access door with push button latch.	1
3110-0052	Bolt-on diamond plate tailboard (full width of rear compartment). Includes the enhanced extended side compartment frame work and handrails- (2) vertical on trailing edge of body and horizontal mounted handrail(s) below hosebed.	1
3110-0092	Enhanced Extended Compartmentation stepped down below hosebed level. Includes embossed diamond plate compartment tops.	1
DOORS		
3300-0017-004	Door roll up short (up to 45") with satin finish ROM. Location(s): L2.	1
3300-0017-016	Door roll up short (up to 45") with satin finish ROM. Location(s): R2.	1
3300-0019-003	Door roll up tall (greater than 45") with satin finish ROM. Location(s): L1.	1
3300-0019-005	Door roll up tall (greater than 45") with satin finish ROM. Location(s): L3.	1

3300-0019-015	Door roll up tall (greater than 45") with satin finish ROM. Location(s): R1.	1
3300-0019-017	Door roll up tall (greater than 45") with satin finish ROM. Location(s): R3.	1
3300-0019-027	Door roll up tall (greater than 45") with satin finish ROM. Location(s): B1.	1
SHELVES		
3370-0025-101	Permanent shelf. Locate in R1 at offset (above extrusion if applicable).	1
3370-0025-102	Permanent shelf. Locate in R3 at offset (above extrusion if applicable).	1
3370-0052-003	Adjustable shelf (J-Style) for non-transverse compartments 16" or greater in depth. Location: L1.	1
3370-0052-004	Adjustable shelf (J-Style) for non-transverse compartments 16" or greater in depth. Location: L2.	1
3370-0052-005	Adjustable shelf (J-Style) for non-transverse compartments 16" or greater in depth. Location: L3.	1
3370-0052-027	Adjustable shelf (J-Style) for non-transverse compartments 16" or greater in depth. Location: B1.	1
3370-0054-003	Tracks for adjustable shelf and/or adjustable tray in compartments 16" or greater in depth. Location: L1.	1
3370-0054-004	Tracks for adjustable shelf and/or adjustable tray in compartments 16" or greater in depth. Location: L2.	1
3370-0054-005	Tracks for adjustable shelf and/or adjustable tray in compartments 16" or greater in depth. Location: L3.	1
3370-0054-027	Tracks for adjustable shelf and/or adjustable tray in compartments 16" or greater in depth. Location: B1.	1
COVERS		
3305-0007-000-02	Vinyl Red hose bed cover with attached rear flap(s).	1
3305-0008-000-02	Vinyl Red crosslay cover with attached side flaps.	1
PUMP MODULE		
3130-0167	Pump module to be 76" wide (side to side). Includes upper, lower, crosswalk, speedlay and tranverse module(s) if applicable.	1
3130-0523	Side mount pump module. Extruded aluminum with runningboards.	1
3130-0532	Pump panel opening is 39" wide. Pumper / tanker only.	1
3130-0539	Pump module height is 75". Pumper / tanker only.	1
PUMP PANELS		
3134-0016	Stainless steel driver and officer side pump panels.	1
3134-0064	The gauge panel(s) on the driver side of the Side Mount module to be hinged upward. Panel(s) to include (2) mechanical/pneumatic (as applicable to panel size) hold opens and latches.	1
3134-0143	Officer side pump panel to be vertical hinged on forward extrusion. Panel to be (3) pieces with upper (2) panels secured in the closed position with push button latches.	1

	Upper panel to be held open with gas shock.	
MISC PUMP PANEL OPTIONS		
4460-0003	Pump panel tags color coded per NFPA compliance.	1
PUMP MODULE OPTIONS		
3136-0058	E-ONE logo mounted one each side on pump module/preconnect panels. Logos to be sized as applicable to available space on panels.	1
3136-0138	Pump module storage pan.	1
3136-0141	Crosslay double 4.25" wide single stack to hold up to 200' of 2.0" DJ (each).	1
WATER TANK		
4010-0099	Fill tower(s) to be located offset to officer side of water tank.	1
4010-0177	780 Gallon "R" Water Tank. UPF Poly III color fill towers. Note: Any foam cell(s) and/or storage options through the tank will reduce the overall water capacity.	1
TANK PLUMBING		
4450-0010	2" tank fill Akron manual valve.	1
4450-0119	3" tank to pump Akron manual valve w/4" tank connection.	1
LADDER STORAGE / RACKS		
3365-0028	Hard Suction Storage Rack. Driver side compartment top. Includes spring hold downs and scuff plates behind spring mounts (as applicable).	1
3365-0035	Hard Suction Storage Rack. Officer side compartment top. Includes spring hold downs and scuff plates behind spring mounts (as applicable).	1
3365-0049	Brand of ladders capable of being carried on unit to be Alco-Lite.	1
3365-0087-Z71	The length of ladders capable of being stored shall be the following: 24' 2-section, 14' roof ladder and 10' attic ladder w/shoes.	1
3365-0149-O97	Storage tunnel capable of holding: (1) 2-section, (1) roof, (1) attic, (2) pike poles, (1) backboard in Officer side storage tunnel.	1
HANDRAILS / STEPS		
3330-0103	Dual lighted LED folding steps rear NFPA. Includes folding steps on driver side (staggered stepped as applicable with tailboard depth) for NFPA hosebed access and handrail mounted on driver side upper hosebed side (as applicable).	1
3330-0105-060	Dual lighted LED folding step. Location: officer side front compartment face. Each location requires a minimum of (1) handrail per NFPA.	3
3330-0105-062	Dual lighted LED folding step. Location: driver side front compartment face. Each location requires a minimum of (1) handrail per NFPA.	3
MISC BODY OPTIONS		
3090-0002	OAH. Unit has no overall height restrictions.	1
3090-0004	OAL. Unit has no overall length restrictions.	1
3090-0007	The hose bed is to have NFPA capacity.	1

3340-0004	Hosebed above the booster tank. Includes forward hosebed and tower(s) cover plate work (as applicable). Hosebed adjustable divider extrusion rearward of the furthest tower is to run full width of the hosebed (as is practical with other hosebed mounted equipment).	1
3340-0015	Diamond plate single axle wheel well. Includes bolt-on composite wheel well liners and aluminum trim fenderettes.	1
3340-0035	Divider Long. To run full length of hose bed (front to rear).	1
3340-0058	Recessed fuel fill driver side wheel well.	1
3340-0074	Body mainframe and hosebed side assemblies for a 85" high body.	1
3340-0093	Mud flaps, rear, black with E-ONE logo.	1
3340-0110	The rear of each hose bed divider to have a hand hold cut-out(s).	1
3340-0145	Rub rail for the body and pump area module(s).	1
3340-0681	Body mainframe layout line to be 24". Includes body and all applicable modules.	1
SCBA BOTTLE STORAGE		
3320-0020	SCBA Bottle Storage. (4) Fire Shopp SCBA bottle storage with hinged doors with push button latches. (2) officer side and (2) driver side in wheel well area.	1
3320-0100	Strap(s), loop style to retain SCBA bottle(s). Locate one per bottle in each exterior storage compartment.	4
PUMPS		
4005-0016	Hale QMAX 1000-2250 GPM single stage pump.	1
4005-0031	Rating 1500 GPM.	1
PUMP CERTIFICATION		
4475-0000	Pump certification 750-2250 GPM	1
PUMP OPTIONS		
4015-0008	Zinc anodes for Hale pump (PR), (1) discharge side and (1) intake side.	1
4015-0022	Mechanical pump seal - Hale.	1
4015-0052-198	Steamers to be Flush. Location: driver's side.	1
4015-0052-199	Steamers to be Flush. Location: officer's side.	1
4015-0098	Manual operated master pump drain. The master drain shall be clearly marked and placed in accessible location on pump panel.	1
4015-0210	Pump cooler with Innovative Control 1/4 turn valve with "T" handle and label.	1
INTAKES		
4440-0005	2.5" Left Intake Akron Manual Valve.	1
INTAKE OPTIONS		
4445-0016	Intake relief valve, Hale 2.5".	1

DISCHARGES AND PRECONNECTS		
4415-0012-654	1.5" crosslay with Akron manual valve. Location: crosslay 1 & 2.	2
4415-0014-581	2.5" Left Pump Panel Discharge Akron Manual Valve. Location: left side discharge 1.	1
4415-0014-582	2.5" Left Pump Panel Discharge Akron Manual Valve. Location: left side discharge 2.	1
4415-0016-584	2.5" Right Pump Panel Discharge Akron Manual Valve. Location: right side discharge 2.	1
4415-0022-350	2.5" Left Rear Discharge Akron Manual Valve. Location: left rear discharge.	1
4415-0041	3" Deck Gun Discharge, Akron manual valve.	1
4415-0054-583	4" Right Pump Panel Discharge with 3" Akron Manual Valve (Waterous pumps noted location to be forward lower port). Location: right side discharge 1.	1
4417-0106-L65	Deck gun piping to be positioned centered in deck gun channel.	1
DISCHARGE OPTIONS		
4417-0175	Innovative Controls push/pull valve controls with locking T handles.	1
4417-0176	Innovative Controls 3/4" bleeder/drain valve include lift lever with ergonomic grip.	8
4417-0185	Innovative Controls discharge and intake bezels with integral color code and verbiage for side mount pump panel.	1
PRESSURE GOVERNORS		
4465-0011	Class 1 TPG pressure governor. Includes, water, oil, volt and tachometer.	1
GAUGES		
4435-0083	Innovative Controls 10 LED SL series water tank level gauge. On pump panel.	1
4435-0246	2.5" Innovative Controls stainless steel case pressure gauge (0-400) with color code bezel.	8
4435-0247	4" Innovative Controls stainless steel case master pressure gauges with bezel. Intake 30-0-400, and discharge 0-400.	1
ELECTRICAL SYSTEMS		
5010-0013-Y83	Vehicle data recorder - 2009 NFPA compliant. Includes occupant detection with display. Display location: inboard on driver's side overhead console.	1
5010-0036	V-MUX Electrical system for pumper / tanker / rescue.	1
5010-0059-339	VFD Text display for V-MUX electrical system. Location: center of dash.	1
LIGHT BARS		
5300-0055	Light bar Whelen Freedom model FN72QLED 72" LED with MKEZ7 mounts and	1
LIGHT BARS		
	clear lenses. Location: Centered on the front cab roof.	

WARNING LIGHT PACKAGES		
5550-0059-535	Whelen Super LED lower level warning light package. Includes (8) red 600 LED light heads and (2) red 500 LED light heads w/chrome flanges. Locate side facing lights: at forward most position, centered in rear wheel well, and side facing at rear of body in rubrail if equipped.	1
WARNING LIGHTS		
5600-0078-479-06	Whelen Super LED beacon (PR) model L31H with Red domes. Location rear upper body on aerial style brackets.	1
5600-0105-170	Hazard (door ajar) light 2" LED. Location: center overhead.	1
SIRENS		
5500-0015	Whelen model 295SLSA1 siren with microphone (replaced 295HFSA1).	1
5500-0024-170	The electronic siren control is to be located on the center overhead.	1
SPEAKERS		
5510-0029-209	Speaker, Federal Signal Dynamax ES100 with "E-ONE" grille through bumper. Location: driver side front bumper.	1
DOT LIGHTING		
5150-0007	Whelen 600 series LED vertical mount tail lights. Includes LED stop/tail, arrow turn and halogen back-up lights with vertical Cast 3 housing and weatherproof connectors.	1
5150-0017	License plate light LED with chrome housing located at the rear of the body.	1
5150-0025	Marker light LED body/cab package. E-One custom cab and pumper or tanker body only.	1
5150-0032	Bracket license plate at rear of body.	1
LIGHTS - COMPARTMENT, STEP & GROUND		
5380-0077	Compartment light package Amdor Luma-Bar LED for medium bodies. Includes one light per compartment (two if transverse).	1
5380-0200	Ground light package EON LED - small.	1
LIGHTS - DECK AND SCENE		
5390-0058-395	Deck Lights - Truck-Lite LED model 81380 (PR). Location: rear body/beavertail area on the trailing edge up high.	1
5390-0076	Hose bed light Truck-Lite LED model 81380. Locate at front of hose bed. Switched with work light switch in cab.	1
5390-0102	Crosslay light Truck-Lite LED model 81380. Locate to rear of crosslay (SM) and forward of crosslay (TM as applicable). Switched with work light switch in cab.	1
LIGHTS - NON-WARNING		
5400-0003	Engine compartment light (EA).	1
5400-0010	Incandescent pump compartment light (EA).	1

5400-0054	Spotlight Specialty 2150 hand held located on officer's side of cab dash w/12V receptacle.	1
5400-0092	Weldon pump panel LED light package with (3) lights per side pump panel. Pump panels over 45" may require additional lights. Side mount only.	1
CONTROLS / SWITCHES		
5100-0000-199	Foot switch to control air horns located officer's side.	1
5100-0007-198	Foot switch to control electronic siren located driver's side.	1
MISC ELECTRICAL		
1750-0082-762	12V power distribution module. Includes (6) battery hot and (6) switched hot circuits. 100 amps max (IATS). Location: behind officer's seat.	1
5110-0017	Back-up alarm 97 dB.	1
LIGHTS - QUARTZ		
5450-0290-407	Light Whelen Pioneer model PFP1 12V with internal top raise pole mount. Includes switch accessible to driver. Location: driver side of pump module forward area.	1
5450-0290-408	Light Whelen Pioneer model PFP1 12V with internal top raise pole mount. Includes switch accessible to driver. Location: officer side of pump module forward area.	1
ELBOWS		
7400-0004	Elbow 30 degree chrome swivel w/2.5"FNST x 2.5"MNST.	4
HAND TOOLS		
7600-0005	Pike Pole Fiberglass 6'.	1
7600-0007	Pike Pole Fiberglass 10'.	1
HOSE / NOZZLES		
7700-0004	Hard suction hose 6" X 10' with Pyrolite couplings.	2
GROUND LADDERS		
7800-0007	Alco-Lite PRL-14' roof ladder.	1
7800-0016	Alco-Lite PEL-24' 2-section extension ladder.	1
7800-0032	Alco-Lite FL-10, 10' folding ladder w/safety shoes.	1
MISC LOOSE EQUIPMENT		
7900-0010	Chrome Barrel Strainer 6" NST.	1
7900-0014	DOT Required Drive Away Kit - Kit includes three (3) triangular warning reflectors with carrying case. This kit is for the end user and is to remain with the truck.	1
EXTERIOR PAINT		
8100-0071	Undercoating E-ONE.	1

8100-0089	All applicable pump/pre-connect application modules are to have a sanded finish (not painted job color). Includes upper and lower pump modules, crosswalk module and/or speedlay/pre-connect module (as applicable). Rear mounted body/pump module to be painted job color.	1	
8100-0116	Rear body surface to have a sanded finish (not painted job color). Includes hinged doors that do not have discrete sales codes and removable panels.	1	
8100-0176-000-17	Paint E-ONE chassis cab - Sikkens paint. Color: FLNA3225E-1 Red.	1	
8100-0182-000-17	Paint Body - Small - For Pumpers, Rear Mounts, S/A Tankers/Wetsides and Rescues. Sikkens paint. Color: FLNA3225E-1 Red.	1	
8100-0186-000-39	Paint exterior surface of outer steel wheels. Sikkens paint. Color: Job Color.	1	
INTERIOR PAINT			
8150-0011	The interior of the cab to be painted Zolatone gray.	1	
STRIPING			
8300-0002-334-12	NFPA Scotchlite Stripe - 4" wide and straight on front/sides of cab and sides/rear of body. Color: White. Location: bottom of stripe flush with top of bumper and straight back.	1	
8300-0042	White rubrail scotchlite insert.	1	
8300-0084-000-72	Chevron "A" style 6" printed sheet Scotchlite striping full width on rear of body. Includes rear facing extrusions, panels and doors. Colors to be Yellow/Red.	1	
WARRANTY / STANDARD & EXTENDED			
9100-0000	Standard 1 Year Warranty.	1	
9100-0003	Lifetime Frame Warranty.	1	
9100-0004	10 Year/100,000 Mile Structural Warranty for Alum Cab / Body - Statement of Warranty.	1	
9100-0005	10 Year Stainless Steel Plumbing Warranty - Statement of Warranty.	1	
9100-0019	10 Year Limited Paint and Perforation Warranty - For Sikkens Paint.	1	
SUPPORT, DELIVERY, INSPECTIONS AND MANUALS			
9300-0009	Manuals, Operator and Service CD-ROM.	1	
9300-0016	Approval Drawings-Standard.	1	
9300-0316	Fire Apparatus Safety Guide published by FAMA, latest edition.	1	
PRICE	2016 E-ONE RESCUE PUMPER - CYCLONE CUSTOM CHASSIS		$423,194

STATE OF OHIO TERM SCHEDULE

4200 SURFACE RD
COLUMBUS, OH 43228

Quote No: 57488

3/13/2015

Quote Rev:20 Drawing Rev:6

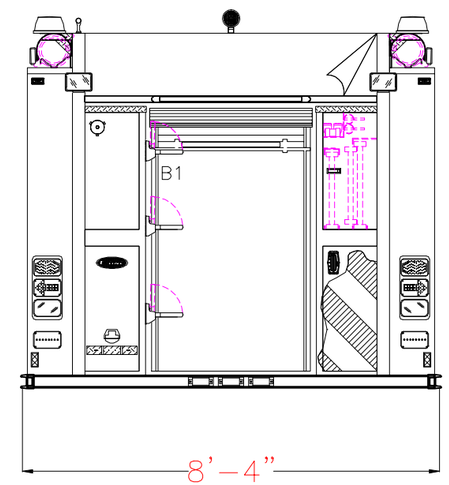

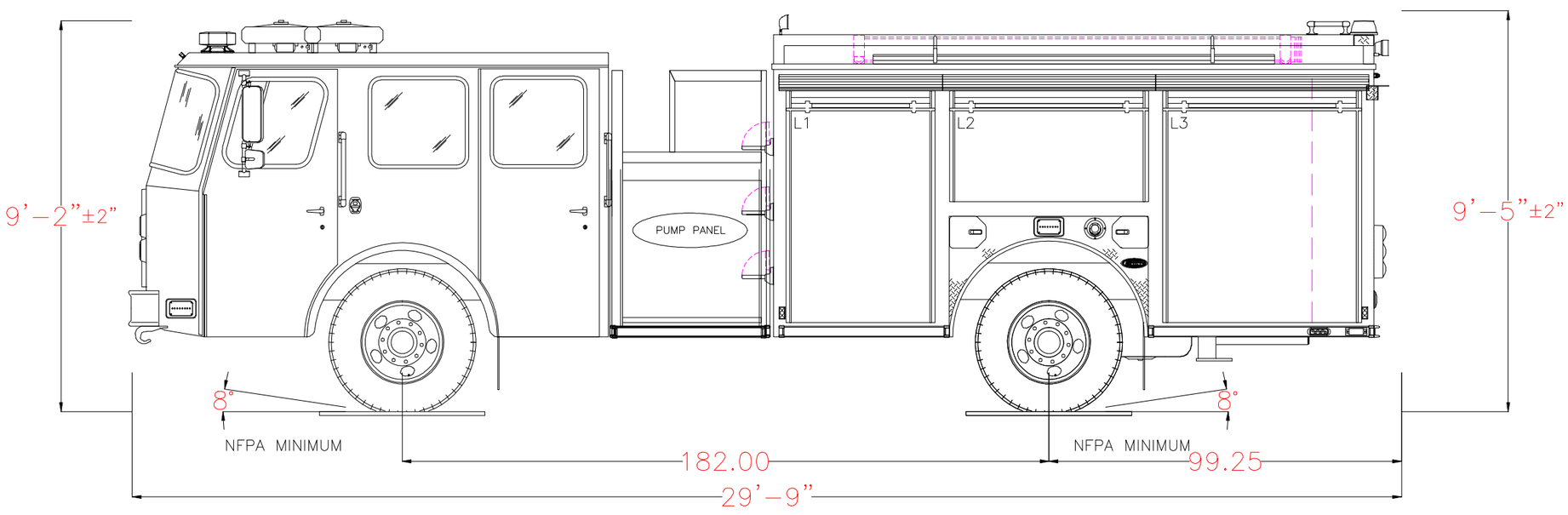

POWERED BY EZDRAW

Notice: This drawing provides a GENERAL REPRESENTATION of the vehicle configuration and should be used for evaluation purposes. The respective dimensions shown,including overall height and length, are estimates and may vary due to manufacturing processes. All other items such as lighting and fixtures, plumbing, compartmentation, and other generally assembled details are shown for REFERENCE ONLY and may not be a direct reflection of the final truck configuration. In ALL situations where this drawing may conflict with the specifications, THE SPECIFICATIONS, AS REFLECTED IN THE APPROVED SHOP ORDER, SHALL PREVAIL. Unless otherwise specified, the proposed apparatus will be manufactured to the latest NFPA recommendations as well as other applicable federally regulated safety regulations. E-One reserves the right to engineer and incorporate design improvements and changes without notice, while adhering to the intent of the specification.

1500 GPM HALE QMAXPUMP 0 TOTAL VOLUME 0 TOTAL FOAM	HOSE LOADS :

	OPENING		INTERIOR DIMENSIONS				
COMPT.	WIDTH	HEIGHT	WIDTH	LOWER HEIGHT	LOWER DEPTH	UPPER HEIGHT	UPPER DEPTH
L1	40	59.75	42	30	26	26.75	26
L2	54	25.75	56	N/A	N/A	26.75	26
L3	54	59.75	56	30	26	26.75	26
R1	40	59.75	42	30	26	26.75	12
R2	54	25.75	56	N/A	N/A	26.75	12
R3	54	59.75	56	30	26	26.75	12
B1	36	45	38	30	26	N/A	N/A

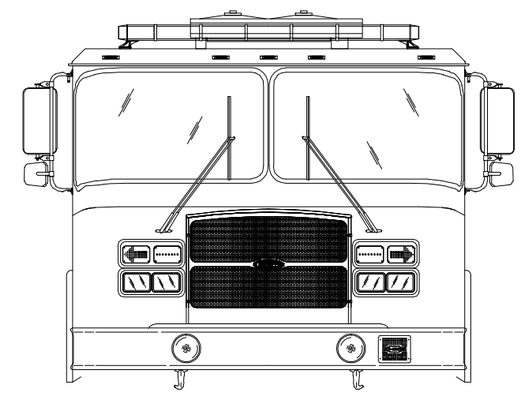

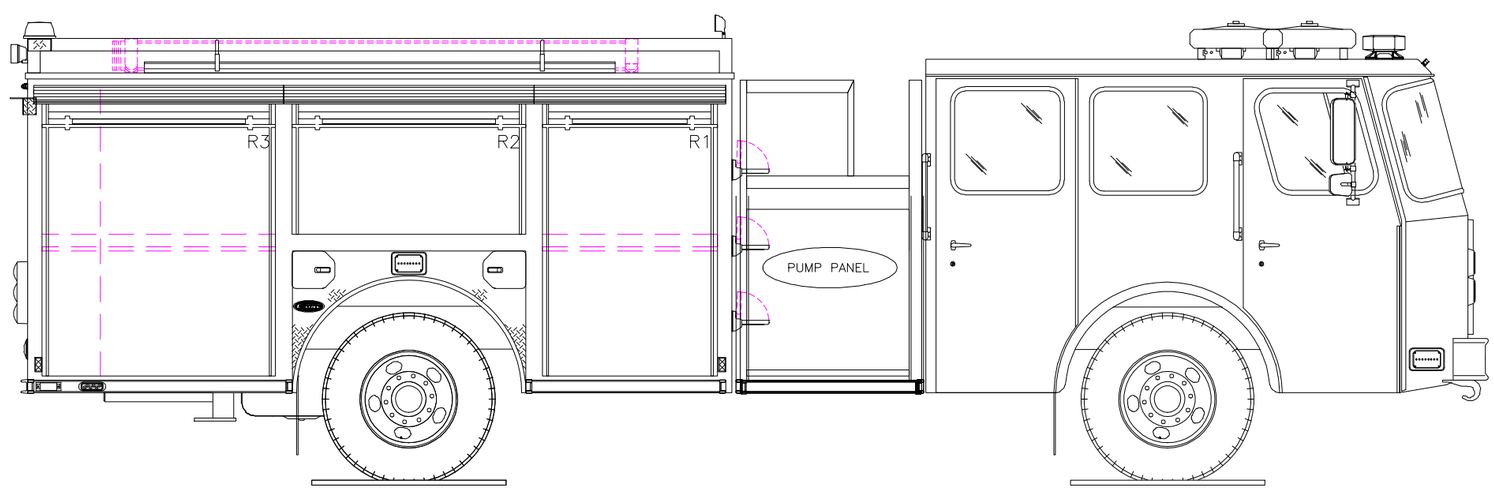

POWERED BY EZDRAW

Fire Apparatus Quotation for:
STATE OF OHIO TERM SCHEDULE

Quotation Number: 71279 Rev: 3

Unit Description: PAEM-CYC2

Quote Description: Pumper, Aluminum, eMAX, Cyclone II

Salescode	Extended Description	Qty
TESTING COMPLIANCE STANDARD		
1001-0015	The E-ONE supplied components of the vehicle shall meet the requirements of NFPA 1901, 2009 edition.	1
BUMPERS		
1160-0000	Bumper 10" stainless steel.	1
1160-0011	4" Front Bumper Extension.	1
FRAME ASSEMBLY		
1250-0003	Frame 10.25 x 3.5 x .375 chassis.	1
1250-0011	Rear underbody support frame.	1
AXLE OPTIONS		
1025-0011	Meritor FL-943 front axle 20,000 lb.	1
1025-0017	Meritor RS-25-160 single rear axle 27,000 lb. capacity.	1
1025-0028	Koni shock absorbers for front axle - adjustable.	1
SUSPENSIONS		
1070-0001	Rear suspension springs rated equal to the capacity of the axle.	1
WHEEL OPTIONS		
1050-0000	Steel wheels for front axle (2).	1
1050-0002	Steel wheels for rear axle (4).	1
1050-0007	Front axle wheel trim kit. Includes stainless steel lug nut covers (chrome plated plastic if applicable) and center cap with E-ONE logo. Note: Center cap will have an inspection port IPO a logo if equipped with Stemco oil seals.	1
1050-0008	Rear axle (single) wheel trim kit. Includes stainless steel lug nut covers (chrome plated plastic if applicable) and center cap with E-ONE logo. E-ONE custom chassis w/steel wheels will have chrome plated plastic lug covers.	1
TIRE OPTIONS		

1060-0016	Four Michelin 12R rear tires with XDN2 mud and snow tread.	1
1060-0046	Two Michelin 425 tires model XFE for front axle.	1
1060-0117	RWC AirGuard LED tire pressure monitoring valve stem caps (6) for single rear axle applications.	1
BRAKE SYSTEMS		
1100-0000	16-1/2" x 6" S-cam brakes with ArvinMeritor automatic slack adjusters for front axle.	1
1100-0002	ArvinMeritor 16-1/2" x 7" S-cam brakes with cast brake drums for a single rear axle.	1
1100-0005	Brake system air 4X2/4X4.	1
1100-0006	Parking brake release mounted on the driver's side lower dash.	1
AIR SYSTEM OPTIONS		
1110-0000-001	Inlet for air system. Location: driver door jamb.	1
1110-0002	Air dryer Bendix AD-9.	1
1110-0006	Air lines nylon.	1
1110-0041	Air horns Grover recessed in bumper (PR).	1
ENGINES & TRANSMISSIONS		
1200-0017	Push-button transmission shift selector.	1
1200-0021	TransSynd synthetic transmission fluid for EVS 4000.	1
1200-0097	Electronic limiting of speed to 68 MPH maximum. Note: Max speed may be set at 65 MPH due to tire rating.	1
1200-0238	Eng/Trans Cummins ISX12 450HP with EVS4000 transmission. 2013 EPA Compliant.	1
SECONDARY BRAKING		
1125-0002	Jacobs engine compression brake.	1
1125-0023	Transmission to seek second gear when Jacobs engine brake or Telma retarder is engaged. N/A with Trans retarder.	1
COOLING PACKAGE		
1800-0013	Cooling system for use with Cyclone II X, Typhoon X, and Quest chassis. For use with 2010/2013 EPA engines. Includes coolant recovery system.	1
FUEL SYSTEMS		
1350-0003	Fuel system 50 gallon.	1
1350-0012-670	Fuel shut-off valve. Location: one (1) inlet side of OEM fuel filter.	1
1350-0022	Fuel line hose rubber.	1
ALTERNATOR		
1700-0005	Alternator Leece Neville 320 amp. 320 amp SAE/275 amp NFPA.	1
BATTERIES		

1400-0002	Battery four group 31 1000 CCA.	1
CHASSIS OPTIONS		
1680-0005	Thermatic fan clutch.	1
1680-0007	Drivelines 1810. Required on 1550 lb/ft torque or greater engines.	1
1680-0008	Tow eyes front painted below bumper/cab (PR).	1
1680-0011	Tow eyes rear below body, painted.	1
1680-0250-M58	Diesel Exhaust Fluid (DEF) 5 gallon tank for 2013 EPA engines. Location: left side below rear of cab.	1
1680-0284	Radiator mounted power steering cooler.	1
CAB MODEL		
1520-0008	Cyclone II X medium cab with 58" CA	1
CAB ROOF TYPE		
1615-0007	Delete rear vista roof windows.	1
1615-0010	Cab roof to be "flat" (non-vista).	1
CAB BADGE PACKAGE		
1610-0000	Cab and body to have applicable E-ONE logos.	1
CAB DOOR OPTIONS		
1550-0003	Rear crew cab doors in the medium position.	1
1550-0005	Driver and officer cab door windows. Include forward vent windows.	1
1550-0011	Rear crew cab door windows. Includes manual roll-down actuation. Not available on Typhoon or CII with paddle style door latching.	1
1550-0016	Cab door panels ABS.	1
1550-0025	All cab doors shall have "L" style exterior latches.	1
1550-0027	Front cab door windows to have manual actuation.	1
1550-0038-659	(4) LED cab step area lighting. Locate each light on each cab door in the inboard position. Lights to be switched with door ajar.	1
1550-0044	All cab door kick plates to be made from diamond plate aluminum.	1
1550-0059-000-G6	Reflective Red/Lemon Yellow printed striping positioned in the "A" formation located on the cab door panels.	1
1550-0077	Interior cab door locks - manual. Will have manual actuation from each respective door. Includes barrel style key lock on each exterior cab door.	1
1550-0083	All cab exterior access doors to have CH751 keyed locks.	1
MIRRORS		
1670-0003	Velvac 2010 mirrors. Door mounted west coast style with remote control and heat.	1

MISC EXTERIOR CAB OPTIONS

1550-0020	Windows cab side fixed driver's side.	1
1550-0033	Windows cab side fixed officer's side.	1
1675-0022	Pair of 18" handrails located just behind driver and officer front door one each side.	1
1675-0023	Pair of 18" handrails located just behind driver and officer rear door (ALS doors if equipped) one each side.	1
1675-0030	Mud flaps, front, black with E-ONE logo.	1
1675-0047	Rear cab wall to be 3/16" aluminum diamond plate.	1
1675-0201	Large radius cab wheel well. Includes bolt-on ajustable wheel well trim.	1
1675-0202	Mounting plate for battery charger receptacle, indicator and air inlet (if applicable). Plate to be removable brushed stainless steel.	1
HVAC		
1515-0018	Air conditioning for the Typhoon X, CII X and Quest with roof top mounted condenser.	1
1515-0053	Controls for heating and air conditioning shall be located in the center dash area. (Lower area on Typhoon and CII with severe duty dash)	1
SEATS		
1510-0003	Seats, Inc. brand 911 cab seats.	1
1510-0008	Seat color gray.	1
1510-0035-147	Universal air pack bottle bracket (EA). Location: officer's seat.	1
1510-0035-148	Universal air pack bottle bracket (EA). Location: rear facing driver's side.	1
1510-0035-215	Universal air pack bottle bracket (EA). Location: rear facing officer's side.	1
1510-0038	Driver seat 911 air ride.	1
1510-0042	Officer seat to be 911 fixed SCBA.	1
1510-0050	Rear facing 911 seat with SCBA driver's side.	1
1510-0053	Rear facing 911 seat with SCBA officer's side.	1
1510-0234	Seat cover material Turnout Tuff.	1
1685-0031	Seating capacity tag of four occupants.	1
MISC INTERIOR CAB OPTIONS		
1685-0000	Cab interior gray. Does not include engine cover or seat color.	1
1685-0005	Lexan sun visors, driver and officer's side overhead.	1
1685-0168	ABS Dash package. Includes center and officer side dash, lower kick panels and "A" post covers.	1
1685-0187	Severe duty engine cover, molded polyurethane.	1
CAB ELECTRICAL OPTIONS		
1750-0013-172	Turn signal Whelen 600 LED amber arrow pair located upper headlight bezel.	1
1750-0024-179-04	Auto-Eject receptacle inlet 20 amp located outside driver's door next to handrail with a Yellow cover.	1

1750-0029	Switch horn button two position DOT/air horn.	1
1750-0046-195	Cab Headlights. Position: lower.	1
1750-0072-593	12 VDC (or 24VDC) electrical outlet in the cab wired battery hot. Location: officer side dash.	2
1750-0075	English dominant main cab gauge cluster.	1
1750-0158	Dome Lts Red/White LED. Package includes two lights mounted in the front and two mounted in the rear of the cab. White light wired through door and light assembly switch. Red light through light assembly switch.	1
1750-0188	DPF regeneration override switch.	1
1750-0198-A31	Battery charger to be located behind driver's seat.	1
1750-0343	Battery charger E-ONE LPC 20. 120 volt inlet, 20 amp output.	1
1750-0435	Halogen cab headlights. TyphoonX, CIIX and QST2 only.	1
BODY COMPT LEFT SIDE		
3100-0245	Driver side body with full height 60" wide forward and 56" wide rearward compartmentation. Includes (1) 56" wide compartment over the wheel well. Side Mount eMAX only.	1
BODY COMPT RIGHT SIDE		
3120-0403	Officer side body with full height 60" wide forward and 56" wide rearward compartmentation. Includes (1) 56" wide compartment over the wheel well and one (1) storage tunnel located behind the upper (3) compartment back walls.	1
BODY COMPT REAR		
3110-0013	Full Height Rear Compartment with Officer Side Storage Tunnel. Includes smooth plate panels and storage access door with push button latch.	1
3340-0102	Angled (Boston style) style tailboard corners.	1
3340-0319	Bolt-on diamond plate 10" tailboard (full width of body). For use with rear ladder application. Includes handrails- (1) vertical on trailing edge of body opposite side of ladder and handrail(s) horizontal below hosebed.	1
BODY MODULE FRONT		
3125-0005	eMAX Forward body configuration - SM. Includes a lower double preconnect storage area, upper transverse storage area, rack in upper storage area for (2) backboards (vertical stored offset forward - sleeve each side of center pump access), center front pump access doors and removable center floor in upper area.	1
DOORS		
3300-0017-004	Door roll up short (up to 45") with satin finish ROM. Location(s): L2.	1
3300-0017-016	Door roll up short (up to 45") with satin finish ROM. Location(s): R2.	1
3300-0017-027	Door roll up short (up to 45") with satin finish ROM. Location(s): B1.	1
3300-0019-003	Door roll up tall (greater than 45") with satin finish ROM. Location(s): L1.	1
3300-0019-005	Door roll up tall (greater than 45") with satin finish ROM. Location(s): L3.	1

3300-0019-015	Door roll up tall (greater than 45") with satin finish ROM. Location(s): R1.	1
3300-0019-017	Door roll up tall (greater than 45") with satin finish ROM. Location(s): R3.	1
SHELVES		
3370-0025-101	Permanent shelf. Locate in R1 at offset (above extrusion if applicable).	1
3370-0025-102	Permanent shelf. Locate in R3 at offset (above extrusion if applicable).	1
3370-0052-003	Adjustable shelf (J-Style) for non-transverse compartments 16" or greater in depth. Location: L1.	1
3370-0052-004	Adjustable shelf (J-Style) for non-transverse compartments 16" or greater in depth. Location: L2.	1
3370-0052-005	Adjustable shelf (J-Style) for non-transverse compartments 16" or greater in depth. Location: L3.	1
3370-0052-027	Adjustable shelf (J-Style) for non-transverse compartments 16" or greater in depth. Location: B1.	1
3370-0053-579	Adjustable shelf (C-Style) for non-transverse compartments up to 15.99" in depth. Location: B1 upper.	1
3370-0054-003	Tracks for adjustable shelf and/or adjustable tray in compartments 16" or greater in depth. Location: L1.	1
3370-0054-004	Tracks for adjustable shelf and/or adjustable tray in compartments 16" or greater in depth. Location: L2.	1
3370-0054-005	Tracks for adjustable shelf and/or adjustable tray in compartments 16" or greater in depth. Location: L3.	1
3370-0054-027	Tracks for adjustable shelf and/or adjustable tray in compartments 16" or greater in depth. Location: B1.	1
3370-0055-579	Tracks for adjustable shelf in shallow compartments up to 15.99" deep. Location: B1 upper.	1
COVERS		
3305-0007-000-02	Vinyl Red hose bed cover with attached rear flap(s).	1
3305-0016-000-02	Vinyl Red speedlay side covers.	1
PUMP PANELS		
3134-0079	The side pump intake / discharge panels to be stainless steel. eMAX only.	1
3134-0080	Pump operator control panel in driver side forward body compartment to be stainless steel. eMAX only.	1
3134-0095	The upper gauge panel on the enclosed pump panel is to be hinged forward. Side mount eMAX only.	1
MISC PUMP PANEL OPTIONS		
4460-0003	Pump panel tags color coded per NFPA compliance.	1
4460-0058	Push-pull handles on the pump operator's panel to be oriented vertical. eMAX only.	1
PUMP MODULE OPTIONS		
3136-0058	E-ONE logo mounted one each side on pump module/preconnect panels. Logos to be	1

	sized as applicable to available space on panels.	
3136-0090	Speedlay tray - removable. Tray includes a 1.25" extruded alum handle low on each end of tray and slots down each side to facilitate lifting. The floor of the tray shall have poly slides and be slotted to prevent the accumulation of water and allow for ventilation of wet hose.	2
WATER TANK		
4010-0099	Fill tower(s) to be located offset to officer side of water tank.	1
4010-0177	780 Gallon "R" Water Tank. UPF Poly III color fill towers. Note: Any foam cell(s) and/or storage options through the tank will reduce the overall water capacity.	1
TANK PLUMBING		
4450-0010	2" tank fill Akron manual valve.	1
4450-0121	3" Tank to pump Akron air actuated valve w/4" tank connection.	1
LADDER STORAGE / RACKS		
3365-0028	Hard Suction Storage Rack. Driver side compartment top. Includes spring hold downs and scuff plates behind spring mounts (as applicable).	1
3365-0035	Hard Suction Storage Rack. Officer side compartment top. Includes spring hold downs and scuff plates behind spring mounts (as applicable).	1
3365-0049	Brand of ladders capable of being carried on unit to be Alco-Lite.	1
3365-0087-Z71	The length of ladders capable of being stored shall be the following: 24' 2-section, 14' roof ladder and 10' attic ladder w/shoes.	1
3365-0149-O97	Storage tunnel capable of holding: (1) 2-section, (1) roof, (1) attic, (2) pike poles, (1) backboard in Officer side storage tunnel.	1
HANDRAILS / STEPS		
3110-0099-524	NFPA hose bed access ladder. Zico model RL12 for increased visibility of rear outboard body mounted DOT/NFPA lighting. Includes required step lights and additional hand rail(s) if applicable. Location: rear of body driver side.	1
3330-0073	Step rear intermediate. Locate above B1, includes handrail (in place of horizontal hosebed handrail).	1
3330-0158	Step below side intake / discharge panel (PR). Gator grip diamond plate. Each location requires a minimum of (1) handrail / handhold per NFPA. eMAX only.	1
MISC BODY OPTIONS		
3090-0002	OAH. Unit has no overall height restrictions.	1
3090-0004	OAL. Unit has no overall length restrictions.	1
3090-0007	The hose bed is to have NFPA capacity.	1
3340-0004	Hosebed above the booster tank. Includes forward hosebed and tower(s) cover plate work (as applicable). Hosebed adjustable divider extrusion rearward of the furthest tower is to run full width of the hosebed (as is practical with other hosebed mounted equipment).	1
3340-0035	Divider Long. To run full length of hose bed (front to rear).	1

3340-0049	Hosebed storage pan. Locate in forward area of hosebed.	1
3340-0058	Recessed fuel fill driver side wheel well.	1
3340-0075	Body mainframe and hosebed side assemblies for a 90" high body.	1
3340-0093	Mud flaps, rear, black with E-ONE logo.	1
3340-0110	The rear of each hose bed divider to have a hand hold cut-out(s).	1
3340-0282-I06	Cab tilt switch and manual jack to be located: R1 low on forward wall.	1
3340-0302	Long hose bed divider(s) to be held short to allow for adjustability of the divider(s) with hose bed preconnect(s).	1
3340-0486	Diamond plate single axle wheel well. Includes bolt-on composite wheel well liners and bolt-on polished alum fenderettes.	1
3340-0494	Rubrail for the body.	1
3340-0586	Storage pan over eMAX transverse storage area(s).	1
3340-0681	Body mainframe layout line to be 24". Includes body and all applicable modules.	1
SCBA BOTTLE STORAGE		
3320-0007	SCBA Bottle Storage. (7) E-ONE SCBA bottle storage with hinged doors (doors to match wheel well material) with push button latches. (4) officer side and (3) driver side in wheel well area.	1
3320-0100	Strap(s), loop style to retain SCBA bottle(s). Locate one per bottle in each exterior storage compartment.	7
PUMPS		
4005-0031	Rating 1500 GPM.	1
4005-0131	E-ONE 1250-1500 GPM pump, single stage.	1
PUMP CERTIFICATION		
4475-0000	Pump certification 750-2250 GPM	1
PUMP OPTIONS		
4015-0053-198	Steamers to be Flush + 1". Location: driver's side.	1
4015-0053-199	Steamers to be Flush + 1". Location: officer's side.	1
4015-0098	Manual operated master pump drain. The master drain shall be clearly marked and placed in accessible location on pump panel.	1
4015-0133	Anode for Darley pump - (1) intake side.	1
4015-0210	Pump cooler with Innovative Control 1/4 turn valve with "T" handle and label.	1
INTAKES		
4440-0147	2.5" Left Intake Akron Manual Valve With Integral 30 Degree Chrome Droop.	1
INTAKE OPTIONS		
4445-0048	Intake pressure relief valve, Task Force Tips.	1
DISCHARGES AND PRECONNECTS		

4415-0018	2.5" left front hose bed discharge Akron manual valve.	1
4415-0041	3" Deck Gun Discharge, Akron manual valve.	1
4415-0065	1.5" Double Speedlay with Akron Manual Valves.	1
4415-0161-581	2.5" Left Panel Discharge Akron Manual Valve w/30 Degree Chrome Droop. Location: left side discharge 1.	1
4415-0161-582	2.5" Left Panel Discharge Akron Manual Valve w/30 Degree Chrome Droop. Location: left side discharge 2.	1
4415-0164-584	2.5" Right Panel Discharge Akron Manual Valve w/30 Degree Chrome Droop. Location: right side discharge 2.	1
4415-0923-583	4" Right Pump Panel Discharge with 3" Akron Manual Valve. Include a 4"FNST swivel x 4"MNST 30 degree droop adapter, and cap. Location: right side discharge 1.	1
4417-0106-685	Deck gun piping to be positioned driver side of hose bed storage pan.	1
DISCHARGE OPTIONS		
4417-0175	Innovative Controls push/pull valve controls with locking T handles.	1
4417-0176	Innovative Controls 3/4" bleeder/drain valve include lift lever with ergonomic grip.	8
4417-0185	Innovative Controls discharge and intake bezels with integral color code and verbiage for side mount pump panel.	1
PRESSURE GOVERNORS		
4465-0011	Class 1 TPG pressure governor. Includes, water, oil, volt and tachometer.	1
GAUGES		
4435-0083	Innovative Controls 10 LED SL series water tank level gauge. On pump panel.	1
4435-0246	2.5" Innovative Controls stainless steel case pressure gauge (0-400) with color code bezel.	8
4435-0247	4" Innovative Controls stainless steel case master pressure gauges with bezel. Intake 30-0-400, and discharge 0-400.	1
ELECTRICAL SYSTEMS		
5010-0013-Y83	Vehicle data recorder - 2009 NFPA compliant. Includes occupant detection with display. Display location: inboard on driver's side overhead console.	1
5010-0036	V-MUX Electrical system for pumper / tanker / rescue.	1
5010-0059-339	VFD Text display for V-MUX electrical system. Location: center of dash.	1
LIGHT BARS		
5300-0055	Light bar Whelen Freedom model FN72QLED 72" LED with MKEZ7 mounts and clear lenses. Location: Centered on the front cab roof.	1
WARNING LIGHT PACKAGES		
5550-0059-535	Whelen Super LED lower level warning light package. Includes (8) red 600 LED light heads and (2) red 500 LED light heads w/chrome flanges. Locate side facing lights: at forward most position, centered in rear wheel well, and side facing at rear of body	1

	in rubrail if equipped.	
WARNING LIGHTS		
5600-0078-479-06	Whelen Super LED beacon (PR) model L31H with Red domes. Location rear upper body on aerial style brackets.	1
5600-0105-170	Hazard (door ajar) light 2" LED. Location: center overhead.	1
SIRENS		
5500-0015	Whelen model 295SLSA1 siren with microphone (replaced 295HFSA1).	1
5500-0024-170	The electronic siren control is to be located on the center overhead.	1
SPEAKERS		
5510-0029-209	Speaker, Federal Signal Dynamax ES100 with "E-ONE" grille through bumper. Location: driver side front bumper.	1
DOT LIGHTING		
5150-0017	License plate light LED with chrome housing located at the rear of the body.	1
5150-0025	Marker light LED body/cab package. E-One custom cab and pumper or tanker body only.	1
5150-0032	Bracket license plate at rear of body.	1
5150-0056	Whelen 600 series LED vertical mount tail lights. Includes LED stop/tail, arrow turn and back-up lights with vertical Cast 3 housing and weatherproof connectors.	1
LIGHTS - COMPARTMENT, STEP & GROUND		
5380-0144	Compartment light package Amdor Luma-Bar LED for medium bodies. Includes two lights per compartment (four if transverse).	1
5380-0182	Ground light package EON LED - large.	1
LIGHTS - DECK AND SCENE		
5390-0007	Deck/scene light circuit wiring through chassis reverse. Requires rear deck or scene light.	1
5390-0076	Hose bed light Truck-Lite LED model 81380. Locate at front of hose bed. Switched with work light switch in cab.	1
5390-0152-396	Whelen 600 series gradient Super LED surface mounted scene lights (PR) with weatherproof connectors. Switch in cab (driver and officer side lights switched separately). Locate (1) each side rear compartment face up high.	1
LIGHTS - NON-WARNING		
5400-0003	Engine compartment light (EA).	1
5400-0010	Incandescent pump compartment light (EA).	1
5400-0054	Spotlight Specialty 2150 hand held located on officer's side of cab dash w/12V receptacle.	1
5400-0137	Pump panel LED light package for side mount eMAX. Includes (6) TecNiq EON lights with S/S housings, located (3) each side above lower side intake/discharge panels. Includes S/S light shields. SM eMAX only.	1

CONTROLS / SWITCHES		
5100-0000-199	Foot switch to control air horns located officer's side.	1
5100-0007-198	Foot switch to control electronic siren located driver's side.	1
MISC ELECTRICAL		
5110-0017	Back-up alarm 97 dB.	1
LIGHTS - QUARTZ		
5450-0123-429	Light Whelen Pioneer Plus LED model PFP2 12V with PBAPEDD pedestal mount. Includes switch in cab (side facing lights switched separately). Location(s): driver side forward compartment top.	1
5450-0123-431	Light Whelen Pioneer Plus LED model PFP2 12V with PBAPEDD pedestal mount. Includes switch in cab (side facing lights switched separately). Location(s): officer side forward compartment top.	1
HAND TOOLS		
7600-0005	Pike Pole Fiberglass 6'.	1
7600-0007	Pike Pole Fiberglass 10'.	1
HOSE / NOZZLES		
7700-0004	Hard suction hose 6" X 10' with Pyrolite couplings.	2
GROUND LADDERS		
7800-0007	Alco-Lite PRL-14' roof ladder.	1
7800-0016	Alco-Lite PEL-24' 2-section extension ladder.	1
7800-0032	Alco-Lite FL-10, 10' folding ladder w/safety shoes.	1
MISC LOOSE EQUIPMENT		
7900-0010	Chrome Barrel Strainer 6" NST.	1
7900-0014	DOT Required Drive Away Kit - Kit includes three (3) triangular warning reflectors with carrying case. This kit is for the end user and is to remain with the truck.	1
EXTERIOR PAINT		
8100-0071	Undercoating E-ONE.	1
8100-0116	Rear body surface to have a sanded finish (not painted job color). Includes hinged doors that do not have discrete sales codes and removable panels.	1
8100-0176-000-17	Paint E-ONE chassis cab - Sikkens paint. Color: FLNA3225E-1 Red.	1
8100-0182-000-17	Paint Body - Small - For Pumpers, Rear Mounts, S/A Tankers/Wetsides and Rescues. Sikkens paint. Color: FLNA3225E-1 Red.	1
8100-0186-000-39	Paint exterior surface of outer steel wheels. Sikkens paint. Color: Job Color.	1
INTERIOR PAINT		
8150-0011	The interior of the cab to be painted Zolatone gray.	1
STRIPING		

8300-0002-334-12	NFPA Scotchlite Stripe - 4" wide and straight on front/sides of cab and sides/rear of body. Color: White. Location: bottom of stripe flush with top of bumper and straight back.	1	
8300-0042	White rubrail scotchlite insert.	1	
8300-0084-000-72	Chevron "A" style 6" printed sheet Scotchlite striping full width on rear of body. Includes rear facing extrusions, panels and doors. Colors to be Yellow/Red.	1	
WARRANTY / STANDARD & EXTENDED			
9100-0000	Standard 1 Year Warranty.	1	
9100-0003	Lifetime Frame Warranty.	1	
9100-0004	10 Year/100,000 Mile Structural Warranty for Alum Cab / Body - Statement of Warranty.	1	
9100-0005	10 Year Stainless Steel Plumbing Warranty - Statement of Warranty.	1	
9100-0019	10 Year Limited Paint and Perforation Warranty - For Sikkens Paint.	1	
SUPPORT, DELIVERY, INSPECTIONS AND MANUALS			
9300-0009	Manuals, Operator and Service CD-ROM.	1	
9300-0016	Approval Drawings-Standard.	1	
9300-0316	Fire Apparatus Safety Guide published by FAMA, latest edition.	1	
PRICE	2016 E-ONE EMAX PUMPER - CYCLONE CUSTOM CHASSIS		$438,116

STATE OF OHIO TERM SCHEDULE

4200 SURFACE RD
COLUMBUS, OH 43228

Quote No: 71279

3/13/2015

Quote Rev:3 Drawing Rev:1

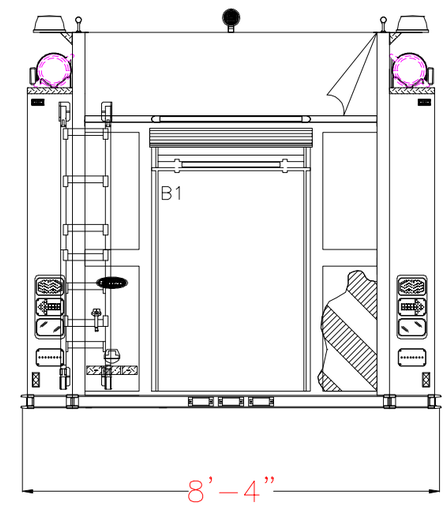

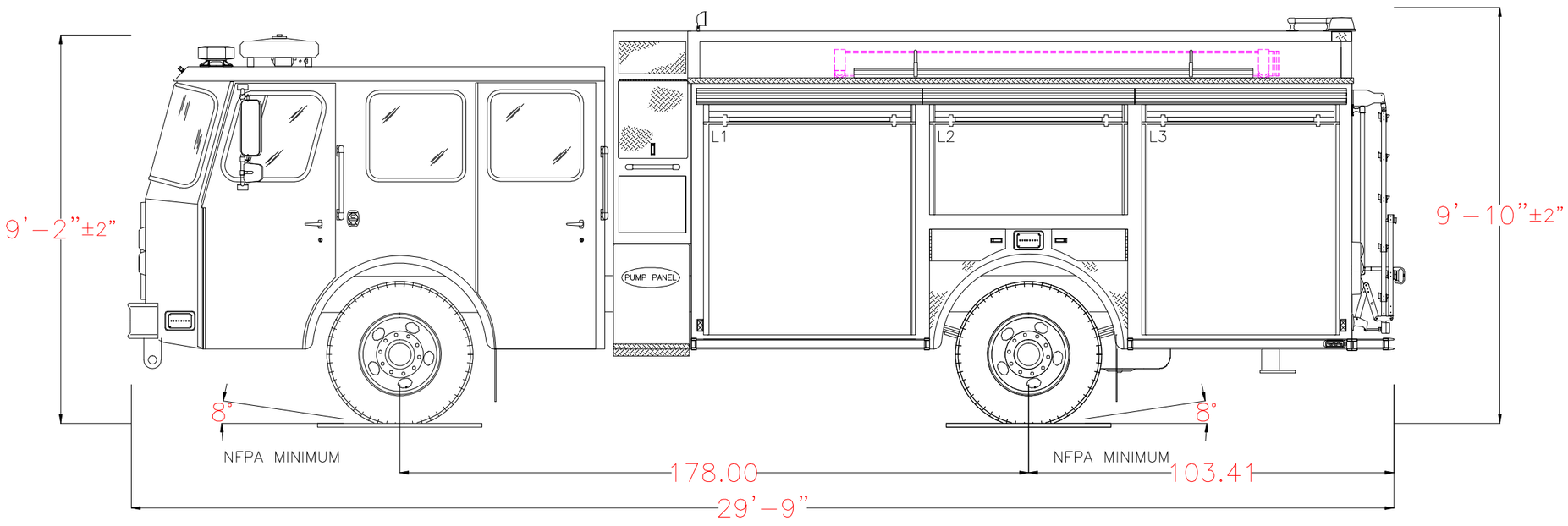

POWERED BY EZDRAW

Notice: This drawing provides a GENERAL REPRESENTATION of the vehicle configuration and should be used for evaluation purposes. The respective dimensions shown,including overall height and length, are estimates and may vary due to manufacturing processes. All other items such as lighting and fixtures, plumbing, compartmentation, and other generally assembled details are shown for REFERENCE ONLY and may not be a direct reflection of the final truck configuration. In ALL situations where this drawing may conflict with the specifications, THE SPECIFICATIONS, AS REFLECTED IN THE APPROVED SHOP ORDER, SHALL PREVAIL. Unless otherwise specified, the proposed apparatus will be manufactured to the latest NFPA recommendations as well as other applicable federally regulated safety regulations. E-One reserves the right to engineer and incorporate design improvements and changes without notice, while adhering to the intent of the specification.

1500 GPM PUMP 0 TOTAL VOLUME 0 TOTAL FOAM	HOSE LOADS :

	OPENING		INTERIOR DIMENSIONS				
COMPT.	WIDTH	HEIGHT	WIDTH	LOWER HEIGHT	LOWER DEPTH	UPPER HEIGHT	UPPER DEPTH
L1	58	59.75	60	30	26	26.75	26
L2	54	25.75	56	N/A	N/A	26.75	26
L3	54	59.75	56	30	26	26.75	26
R1	58	59.75	60	30	26	26.75	12
R2	54	25.75	56	N/A	N/A	26.75	12
R3	54	59.75	56	30	26	26.75	12
B1	36	45	38	30	26	N/A	N/A

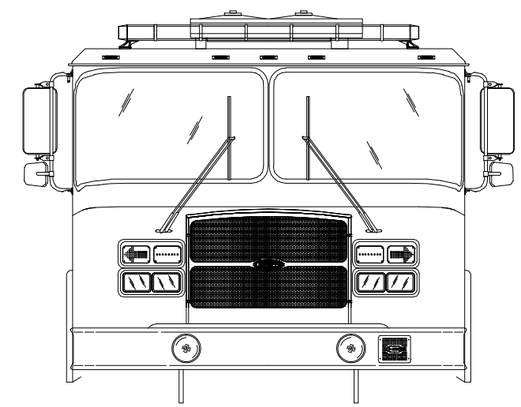

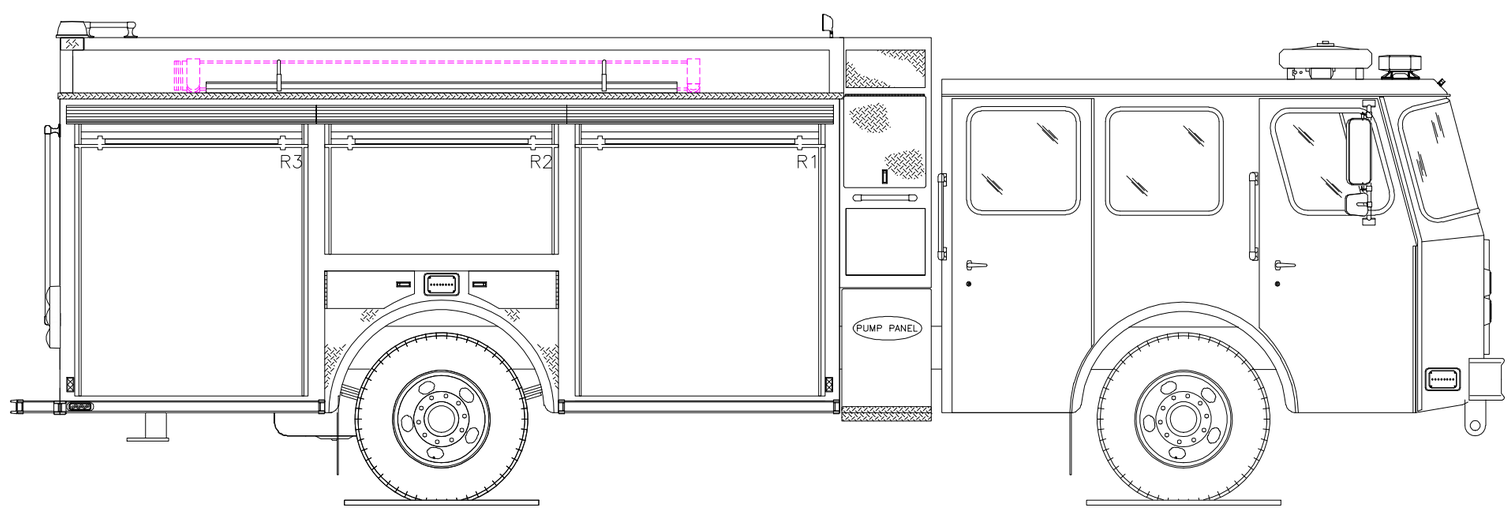

POWERED BY EZDRAW

1000	Custom Chassis	
1020-0036	Gates Green Stripe hose IPOS (silicone hose) shall be used for all heater applications within the cab.	$116
1025-0004	Meritor FL941 front axle 18,000 lb.	$11,353
1025-0005	Meritor FL-941 front axle 18,700 lb.	$17,026
1025-0006	Meritor FL941 front axle 20,000 lbs.	$17,642
1025-0007	Meritor FL941 front axle 21,000lb	$17,642
1025-0008	Meritor FL941 front axle 21,500lb	$17,888
1025-0009	Meritor FL943 front axle 18,000 lbs.	$13,819
1025-0010	Meritor FL-943 front axle 18,700 lb.	$17,888
1025-0011	Meritor FL-943 front axle 20,000 lb.	$18,630
1025-0012	Meritor FL-943 front axle 21,000 lb.	$18,874
1025-0013	Meritor FL-943 front axle 21,500 lbs.	$19,246
1025-0014	Meritor front drive axle and suspension 16,540#	$12,584
1025-0015	Meritor front drive axle and suspension 18,000#	$37,556
1025-0016	Meritor RS-24-160 single rear axle 24,000 lb. capacity.	$11,353
1025-0017	Meritor RS-25-160 single rear axle 27,000 lb. capacity.	$12,708
1025-0018	Meritor RS-30-185 single rear axle 31,000 lb. capacity.	$14,189
1025-0019	Meritor RT-40-145 rear tandem axle 40,000 lb. capacity.	$25,905
1025-0020	Meritor RT-46-160 rear tandem axle 46,000 lb. capacity.	$30,223
1025-0021	Meritor RT-46-160 rear tandem axle 48,000 lb. capacity.	$30,223
1025-0022	Meritor RT-50-160 rear tandem axle 52,000 lb. capacity.	$38,240
1025-0023	Meritor RT-50-160 rear tandem axle 54,000 lb. capacity.	$38,240
1025-0027	Driver controlled rear differential.	$810
1025-0028	Koni shock absorbers for front axle - adjustable.	$352
1025-0029	Front shock absorbers.	$189
1025-0030	Stemco oil seal front axle. Chicago Rawhide seal with Stemco sight glass will be supplied when front disc brakes are selected.	$115
1025-0031	Spiral pins front suspension.	$1,758
1025-0034	Automatic traction control. In addition to standard ABS system.	$607
1025-0035	Koni shock absorbers for rear axle.	$558
1025-0036	Automatic Traction Control System 6x4/6x6	$2,071
1025-0058	Stemco oil seal rear axle (per axle). Not available with disc brakes.	$243
1025-0059	Meritor front drive axle and suspension 21,000#	$37,788
1025-0060	Meritor FL-943 front axle 22,100 lb.	$19,967
1025-0078	S-Cam brakes to have Haldex brand slack adjusters (per axle).	$321
1025-0079	Meritor RS-23-240 two speed single rear axle 24,000lb capacity.	$15,977
1025-0086	Meritor FL941 front axle 18,500lb.	$17,026
1025-0089	Meritor RS-26-185 single rear axle 27,000lb capacity	$14,189
1025-0095	Meritor RS-30-185 single rear axle 29,000lb capacity	$14,189
1025-0097	Meritor RS-30-185 single rear axle 33,000 lb. capacity. Requires 16.5" x 8.625" cast shoe brakes and 33K suspension.	$14,189
1025-0108	Meritor RS-30-185 single rear axle 30,000lb capacity	$14,189
1025-0114	Meritor FL943 front axle 18,700lb with multi-leaf front springs.	$18,309
1025-0120	Driver controlled rear differential. Includes guarded toggle switch located on driver side diagnostic panel.	$810
1025-0124	Meritor FL943 front axle 20,000 lb. Springs to have Berlin style eyes with rubber bushings.	$18,945
1025-0125	Meritor FL943 front axle 19,840 lb.	$17,888
1025-0127	Meritor FL941 front axle 18,000 lb with multi-leaf front springs.	$11,764
1025-0132	Koni shock absorbers for front axle - non-adjustable. For use with IFS front axle only.	$352
1025-0133	Meritor FL943 front axle 20,000 lb with multi-leaf front springs.	$19,041
1025-0134	Meritor MT-40-14X rear tandem axle 40,000 lb. capacity.	$25,905
1025-0137	Meritor FL943 front axle 19,220 lb.	$17,888
1025-0142	Chicago oil seal front axle. Chicago Rawhide seal with Chicago Rawhide sight glass (model 1743) will be supplied when front disc brakes are selected.	$115
1025-0144	The front axle shall be fitted with a 1" spacer block per customer request. The spacer block shall not compromise step height requirements or impose unacceptable rake characteristics when added. Chassis engineering approval required.	$209
1025-0146	Reyco Granning independent front suspension - 18,000 lb. Includes shocks and sight glass on hubs.	$30,354
1025-0147	Reyco Granning independent front suspension - 18,700 lb. Includes shocks and sight glass on hubs.	$30,354
1025-0148	Reyco Granning independent front suspension - 19,840 lb. Includes shocks and sight glass on hubs.	$30,354
1025-0149	Reyco Granning independent front suspension - 20,000 lb. Includes shocks and sight glass on hubs.	$30,354
1025-0150	Reyco Granning independent front suspension - 21,000 lb. Includes shocks and sight glass on hubs.	$30,354
1025-0151	Reyco Granning independent front suspension - 21,500 lb. Includes shocks and sight glass on hubs.	$30,354

1025-0152	Reyco Granning independent front suspension - 22,800 lb. Includes shocks and sight glass on hubs.	$30,354
1025-0153	Reyco Granning independent front suspension - 24,000 lb. Includes shocks and sight glass on hubs.	$30,354
1025-0156	Bilstein nitrogen shock absorbers for front axle.	$527
1025-0157	Bilstein nitrogen shock absorbers for tandem rear axle.	$1,675
1025-0158	Stemco sight glass guards.	$98
1025-0159	Meritor front drive axle and suspension 19,840#	$37,788
1025-0163	Rear axle high water ventilation tube.	$224
1025-0165	Meritor FL-943 front axle 22,500 lb.	$19,926
1025-0169	Dana Spicer single rear axle with 27,000 lb capacity with power divider. Includes drivelines to front axle.	$21,456
1050-0000	Steel wheels for front axle (2).	$333
1050-0001	Alcoa aluminum wheels for front axle (2).	$1,794
1050-0002	Steel wheels for rear axle (4).	$659
1050-0003	Alcoa aluminum wheels for rear axle (4).	$3,583
1050-0004	Steel wheels for rear axles (8).	$1,316
1050-0005	Alcoa aluminum wheels for rear axles (8).	$7,163
1050-0007	Front axle wheel trim kit. Includes stainless steel lug nut covers (chrome plated plastic if applicable) and center cap with E-ONE logo. Note: Center cap will have an inspection port IPO a logo if equipped with Stemco oil seals.	$241
1050-0008	Rear axle (single) wheel trim kit. Includes stainless steel lug nut covers (chrome plated plastic if applicable) and center cap with E-ONE logo. E-ONE custom chassis w/steel wheels will have chrome plated plastic lug covers.	$296
1050-0009	Rear axle (tandem) wheel trim kit. Includes stainless steel lug nut covers (chrome plated plastic if applicable) and center caps with E-ONE logo. E-ONE custom chassis w/steel wheels will have chrome plated plastic lug covers.	$659
1050-0017	Each inside wheel of the single rear axle shall have valve stem extensions.	$121
1050-0018	Each inside wheel of the tandem rear axles shall have valve stem extensions.	$239
1050-0019	Two steel wheels painted job color on both the inside and outside facing for front axle.	$639
1050-0026	Front axle Wheel Trim kit. Includes stainless steel lug nut covers and center cap (no logo). Note: Center cap will have an inspection port if equipped with Stemco oil seals.	$241
1050-0027	Rear axle (single) wheel trim kit. Includes stainless steel lug nut covers (chrome plated plastic if applicable) and center caps (no logo). E-ONE custom chassis w/ steel wheels will have chrome plated plastic lug covers.	$296
1050-0028	Rear axle (tandem) Wheel Trim kit. Includes stainless steel lug nut covers (chrome plated plastic if applicable) and center cap (No logo). E-ONE custom chassis w/ steel wheels will have chrome plated plastic lug covers.	$659
1050-0030	Rear axle (single) wheel trim kit. Includes stainless steel lug nut covers and center caps (no logo). E-ONE custom chassis w/ steel wheels will have chrome plated plastic lug covers.	$296
1050-0031	Front axle wheel simulator kit. Includes stainless steel wheel simulator and center cap with E-ONE logo. Note: Center cap will have an inspection port IPO a logo if equipped with Stemco oil seals.	$577
1050-0032	Rear axle (single) wheel simulator kit. Includes full stainless steel wheel simulators with integrated lug nut covers and E-ONE logo.	$842
1050-0033	Dura-Brite finish on aluminum wheel (EA). Not available on 13" wheel (445 tires).	$109
1050-0039	Polish inner and outer aluminum wheel (EA).	$89
1050-0043	Rear axle (tandem) wheel simulator kit. Includes full stainless steel wheel simulators with integrated lug nut covers and E-ONE logo.	$1,682
1050-0044	Accuride aluminum wheels for front axle (2).	$1,743
1050-0045	Accuride aluminum wheels for rear axle (4).	$3,478
1050-0046	Accuride aluminum wheels for rear axles (8).	$6,952
1050-0047	Front axle wheel trim kit. Includes stainless steel "Cover-Up" covers with E-ONE logo. Not available with Stemco oil seals.	$309
1050-0048	Rear axle (single) Wheel Trim kit. Includes stainless steel "Cover-Up" covers with E-ONE logo. Not available with Stemco oil seals.	$397
1050-0049	Rear axle (tandem) Wheel Trim kit. Includes stainless steel "Cover-Up" covers with E-ONE logo.	$791
1050-0054	Crossfire dual wheel air tire equalizing system.	$316
1050-0068	Each outboard facing wheel of the single axle unit shall have valve stem extensions; front 2", rear appropiately sized. Includes additional set (inside and outside) ship loose.	$237
1050-0069	Isolators between wheels and/or hubs.	$208
1050-0071	Wheel check loose lug nut indicators (standard temperature lime green) for 4x2/4x4 chassis. Front and rear wheels.	$143
1050-0076	Accu-Shield finish on aluminum wheel (EA). Not available on 13" wheel (445 tires).	$112
1060-0001	Two Michelin 315 tires model XZA-1 for front axle.	$1,769
1060-0002	Two Michelin 385 tires model XTE-2 for front axle. (Obsolete from manufacturer)	$1,498
1060-0003	Two Michelin 425 tires model XTE-2 for front axle. (Obsolete from manufacturer)	$1,625
1060-0004	Four Michelin 11R tires model XZE2 highway tread for rear axle.	$3,040
1060-0005	Four Michelin 12R tires model XZE highway tread for rear axle.	$3,556
1060-0006	Four Michelin 315 tires model XZA-1 for rear axle	$3,537
1060-0007	Eight Michelin 11R tires model XZE2 for rear axles.	$6,077
1060-0008	Eight Michelin 12R tires model XZE for rear axles	$7,111
1060-0010	Two Goodyear 315 tires for front axle	$1,769
1060-0015	Four Michelin 11R rear tires with XDN2 mud and snow tread.	$3,413

1060-0016	Four Michelin 12R rear tires with XDN2 mud and snow tread.	$3,889
1060-0017	Four Michelin 315 rear tires with XDN2 mud and snow tread.	$4,263
1060-0020	Four Goodyear 315 rear tires with mud and snow tread. Intermittent fire service rating if GAWR is over 29,560.	$3,705
1060-0021	Eight Michelin 11R rear tires with XDN2 mud and snow tread.	$6,827
1060-0022	Eight Michelin 12R rear tires with XDN2 mud and snow tread.	$7,778
1060-0023	Eight Michelin 315 rear tires with Mud and Snow tread	$8,525
1060-0030	Four Goodyear 315 rear tires with G291 highway tread.	$3,537
1060-0042	Two Michelin 365 tires model XZA for front axle. Speed rating for up to 75 mph. Requires Alcoa alum wheels.	$1,808
1060-0043	Two Michelin 425 tires model XZY3 for front axle.	$2,188
1060-0044	Two Michelin 445 tires model XZY3 for front axle.	$2,117
1060-0045	Two Michelin 445 tires model XFE for front axle.	$2,437
1060-0046	Two Michelin 425 tires model XFE for front axle.	$2,271
1060-0047	Two Michelin 385 tires model XFE for front axle.	$2,096
1060-0049	Tyron tire pressure monitoring system model TPMS. Includes wireless remote display in cab.	$1,141
1060-0050	Tire pressure monitoring valve stem caps.	$166
1060-0051	Two Michelin 385 tires model XZY3 for front axle.	$2,061
1060-0060	Two Michelin 315 tires model XZY3 for front axle.	$1,901
1060-0061	Four Michelin 12R rear tires with Mud and Snow XDS tread	$3,212
1060-0072	Two Goodyear 385 tires for front axle.	$2,028
1060-0073	Two Goodyear 425 tires for front axle.	$1,974
1060-0075	Four Goodyear 11R rear tires with mud and snow tread.	$3,754
1060-0076	Four Goodyear 12R rear tires with mud and snow tread.	$4,277
1060-0077	Eight Goodyear 11R rear tires with Mud and Snow tread.	$7,510
1060-0078	Eight Goodyear 12R rear tires with Mud and Snow tread	$8,556
1060-0079	Four Goodyear 11R rear tires with highway tread	$2,718
1060-0080	Eight Goodyear 11R rear tires with highway tread.	$5,431
1060-0081	PressurePro tire pressure monitoring system for single rear axle units. Includes electrical system integrated display in cab.	$971
1060-0085	Eight Michelin 12R rear tires with Mud and Snow XDS tread	$6,417
1060-0086	Four Goodyear 11R rear tires with G287 MSA highway tread	$2,718
1060-0087	Two Goodyear 315 tires with G287 MSA tread for front axle	$1,705
1060-0094	Cat's Eye model 6120-AB00 single rear axle tire pressure monitoring system. For use on 120 PSI tires. Includes braided lines.	$812
1060-0096	Tire balancing (EA). Location: front tires.	$65
1060-0098	Two Bridgestone 315 tires model M860 for front axle.	$2,489
1060-0099	Four Bridgestone 12R tires model R250F highway tread for rear axle.	$4,067
1060-0101	Tire pressure monitoring integrated with V-MUX multiplex electrical system. Requires Vista display and D-TEK. For use with single rear axle units.	$642
1060-0102	Tire pressure monitoring integrated with V-MUX multiplex electrical system. Requires Vista display and D-TEK. For use with tandem rear axle units.	$1,107
1060-0103	Cat's Eye model 6130-AB00 single rear axle tire pressure monitoring system. For use on 130 PSI tires. Includes braided lines.	$812
1060-0104	Four Goodyear 12R rear tires with G661 HSA highway tread.	$2,766
1060-0106	Four Goodyear 11R rear tires with G661 HSA highway tread.	$2,570
1060-0107	Eight Goodyear 11R rear tires with G661 HSA highway tread.	$5,139
1060-0111	Four Goodyear 315 rear tires with G289 WHA tread.	$3,865
1060-0112	Tire pressure monitoring valve stem caps. Real Wheels LED indicators.	$222
1060-0114	Tire pressure monitoring valve stem caps. VECSAFE LED indicators.	$222
1060-0115	Four Goodyear 12R rear tires with G287 MSA highway tread.	$3,212
1060-0117	RWC AirGuard LED tire pressure monitoring valve stem caps (6) for single rear axle applications.	$171
1060-0119	RWC AirGuard LED tire pressure monitoring valve stem caps (10) for tandem rear axle applications.	$273
1060-0120	Two Goodyear 315 front tires with G289 WHA tread.	$1,934
1060-0121	Four Goodyear 11R rear tires with RHD-II G137 tread.	$3,360
1060-0123	RWC AirGuard LED tire pressure monitoring valve stem caps (2) front only. For use with rear axle Crossfire equalization systems.	$69
1070-0001	Rear suspension springs rated equal to the capacity of the axle.	$1,360
1070-0003	Rear suspension air ride rated equal to the capacity of the axle.	$5,527
1070-0004	Rear suspension air ride (40-46K) rated equal to the capacity of the axles.	$9,634
1070-0005	Air ride cab.	$2,843
1070-0007	Shock absorbers rear single axle. Not available on 31,000 lb.	$189
1070-0012	Reyco rear suspension springs rated equal to the capacity of the axle.	$1,360
1070-0013	Rear suspension air ride (48-54K) rated equal to the capacity of the axles.	$11,287
1070-0017	Reyco rear spring suspension w/aux 33K rating.	$2,042
1070-0019	Rear suspension springs rated at 27,000 lbs.	$1,587
1070-0020	Rear axle u-bolts .875". 24K/27K rear axles only. Not available with air ride suspensions.	$106
1070-0021	Rear suspension FIREMAAX EX air ride (50-54K) rated equal to the capacity of the axles. Requires TB modification on 4-jack aerials. (Raises OAH .5" over springs)	$11,238
1070-0024	Lower leaf wrap. Single rear axle only.	$543
1070-0027	Rear suspension FIREMAAX EX model FMX-272 27,000 lb. single axle air ride.	$5,939
1070-0028	Rear suspension FIREMAAX EX model FMX-242 24,000 lb. single axle air ride.	$5,487

1070-0029	Rear suspension FIREMAAX EX model FMX-312 31,000 lb. single axle air ride. Requires aluminum wheels.	$7,779
1070-0031	Front axle u-bolts .875". Not available with independent suspensions.	$106
1100-0000	16-1/2" x 6" S-cam brakes with ArvinMeritor automatic slack adjusters for front axle.	$311
1100-0001	Meritor EX225H 17" disc brakes for front axle.	$1,214
1100-0002	ArvinMeritor 16-1/2" x 7" S-cam brakes with cast brake drums for a single rear axle.	$311
1100-0003	Meritor EX225H 17" disc brakes for rear axle, maximum capacity 27,000 lbs.	$1,214
1100-0004	Meritor EX225H 17" disc brakes for rear axles, maximum capacity 54,000 lbs.	$1,855
1100-0005	Brake system air 4X2/4X4.	$8,208
1100-0007	Parking brake release mounted center of the engine cover.	$316
1100-0008	Brake system air 6X4.	$8,503
1100-0009	Front axle parking brake.	$520
1100-0010	Brake emergency release for spring.	$945
1100-0011	Roll Stability Control, Includes ATC. Not available on commercial chassis, tiller or tandem axle custom chassis.	$1,965
1100-0014	ArvinMeritor 16-1/2" x 7" S-cam brakes with cast brake drums for a tandem rear axle.	$375
1100-0018	Dust Shields. Front and Rear Axle. CAM Brakes only.	$362
1100-0019	Dust Shields. Rear Axle. CAM Brakes only.	$220
1100-0020	Compression fittings for all air brake system lines. Includes cab interior air lines as applicable.	$1,215
1100-0022	Dust Shields. Front and rear tandem axle. CAM brakes only.	$580
1100-0023	Stainless steel park brake release guard.	$212
1100-0024	G4 Electronic Stability Control (4x2), Includes RSC and ATC. Not available on 4x4, commercial chassis or tiller.	$3,455
1100-0025	ArvinMeritor 16-1/2" x 8.625" Q-Plus S-cam brakes with cast brake drums for a single rear axle. 24K axle only.	$1,279
1100-0026	G4 Electronic Stability Control (6x4), Includes RSC and ATC. Not available on 6x6 or commercial chassis.	$4,120
1100-0027	Knorr-Bremse 17" disc brakes for front axle. Timoney IFS only.	$1,214
1100-0030	Brake chambers 30-36 for 24,000# single rear axle. N/A with disc brakes.	$540
1100-0032	Hinged stainless steel park brake release guard.	$282
1100-0035	Glad Hands tow option. Location: Front chassis frame.	$530
1100-0036	16.5" x 8.625" P-Cast S-cam brakes for 27,000 - 33,000 Meritor axle.	$796
1100-0037	Glad Hands tow option. Location: rear chassis frame.	$530
1100-0040	Gauge air brake application additional. Location: officer side overhead console.	$302
1100-0043	Emergency park brake activation valve mounted on the officer's side dash with stainless steel guard.	$657
1100-0045	2nd parking brake release mounted on the officer's side electrical access cover (side facing) with stainless steel guard. Severe duty interior only.	$883
1100-0049	Parking brake release mounted on center dash (not available with ABS dash).	$307
1100-0052	G4 Electronic Stability Control with Wabco OnGuard CMS system (4x2). Includes RSC and ATC. Not available on 4x4, commercial chassis or tiller.	$7,318
1100-0053	G4 Electronic Stability Control with Wabco OnGuard CMS system (6x4). Includes RSC and ATC. Not available on 4x4, commercial chassis or tiller.	$7,982
1100-0054	Bendix SN7 17" disc brakes for front axle. Reyco Granning IFS only.	$1,214
1100-0055	Spring guards on each end of brake lines from wheel to frame.	$165
1110-0000	Inlet for air system. Location: [#LOC].	$368
1110-0001	Air inlet auto eject. Includes weatherproof gasketed cover. [#LOC].	$474
1110-0002	Air dryer Bendix AD-9.	$479
1110-0003	Air dryer System Saver 1200.	$577
1110-0004	Air tank drains w/pull cords.	$420
1110-0005	Automatic moisture ejectors, heated.	$417
1110-0007	Air lines braided.	$2,237
1110-0008	Gauge air brake application mounted in cab	$302
1110-0011	Air intake restriction gauge.	$257
1110-0012	Air outlet off front ACC tank. It shall be located [#LOC].	$368
1110-0013	Air horns shut-off valve. Located in cab accessible by driver.	$108
1110-0026	Air horns recessed in bumper (PR).	$817
1110-0027	Isolated air tank. Includes pressure protection valve.	$556
1110-0041	Air horns Grover recessed in bumper (PR).	$995
1110-0044	Air inlet Auto-Eject. Includes [#COL] weatherproof gasketed cover. Location: [#LOC].	$474
1110-0046	Kussmaul 12V Auto Drain. For use with Kussmaul air compressor.	$462
1110-0049	Air Lines Wrapped in Thermal Loom	$1,811
1110-0050	Air brake lines to have 4 to 6" slack for future service work.	$111
1110-0052	Air horns recessed behind bumper (PR). Includes E-ONE grilles on bumper.	$1,028
1110-0053	Air horns Grover recessed in front bumper. (1) air horn 21" long, (1) air horn 24.5" long	$1,042
1110-0054	Relocate air dryer to opposite the exhaust system inside the frame rails.	$266
1110-0055	Air horns will alternate from driver to officer.	$396
1110-0056	Air dryer Bendix ADIP.	$617
1110-0058	Air horns recessed in bumper (PR) with bells behind bumper.	$875
1110-0059	Air horns Grover (1510) recessed in bumper (PR). Locate both to driver side of bumper.	$1,021
1110-0066	Air horns Grover recessed in front bumper. (1) air horn 21" long, (1) air horn 24.5" long.	$1,222
1110-0077	Recessed air outlet off isolated tank. Location: [#LOC].	$368
1110-0082	Air horns Grover model 2040 rectangular recessed in bumper (PR) with snow caps.	$1,061
1110-0090	Air horns Grover recessed in bumper (PR) with snow caps.	$1,122

1110-0095	Automatic moisture ejector, heated. Wet tank only.	$180
1110-0097	Automatic moisture ejector, non-heated (EA).	$137
1110-0102	Thomas 220 volt air compressor plumbed to air brake system.	$1,152
1110-0106	Air horns Grover recessed behind bumper (PR). Includes E-ONE grilles on bumper.	$1,207
1110-0109	Air hose routed from the compressor to the dryer shall be upgraded to include stainless steel mesh for the full length of hose.	$77
1110-0116	Air horns Buehl recessed in bumper (PR).	$1,037
1110-0117	Air horns Grover model 2040 rectangular recessed in bumper (PR).	$1,061
1110-0118	Inlet for air system. Includes weather proof box and Hubbel [#COL] cover. Location: [#LOC].	$470
1110-0124	Air horns Grover recessed behind bumper (PR). Includes grilles (No Logo) on bumper.	$1,207
1110-0125	Gast air compressor 110v model 3HBB-10-M300AX with moisture filter.	$1,212
1110-0127	Automatic moisture ejector, heated. Air dryer only.	$180
1110-0128	Gauge air for tank. Location: driver side overhead.	$388
1110-0129	Diamond plate flip cover for air inlet or outlet with label mounted in driver's door jamb.	$114
1110-0131	Compression fittings for fan clutch ipos.	$105
1110-0133	Air dryer Haldex model N4253A.	$654
1110-0135	Air horns shut-off valve. Located on driver side overhead console.	$108
1110-0136	Air horns shut-off valve. Located on officer side overhead console.	$108
1110-0137	Compression fittings for pump shift ipos.	$105
1110-0138	Air horns Grover model 2040 rectangular behind bumper (PR). Includes E-ONE grilles.	$1,273
1125-0000	Retarder Telma focal mounted. All four stages applied with brake application. Not available on tandem axle or four jack aerials.	$9,995
1125-0001	Brake Jacob's exhaust	$745
1125-0002	Jacobs engine compression brake.	$1,731
1125-0003	Allison transmission retarder. Pre-select feature will be switched off with this option.	$11,844
1125-0007	Tag located at Jacob Brake Controller. To read: Do Not Operate on Wet or Slippery Surfaces.	$78
1125-0013	Lever control for Telma retarder. 5 position lever with low speed cutout.	$290
1150-0054	Hinged diamond plate lid for driver side bumper tray. Includes 1/4 turn latch and gas shock hold open.	$268
1150-0055	Hinged diamond plate lid for center bumper tray. Includes 1/4 turn latch and gas shock hold open.	$295
1150-0056	Hinged diamond plate lid for officer side bumper tray. Includes 1/4 turn latch and gas shock hold open.	$268
1150-0059	Red vinyl lid with velcro fasteners for bumper tray driver side.	$176
1150-0060	Red vinyl lid with velcro fasteners for bumper tray officer side.	$176
1150-0061	Red vinyl lid with velcro fasteners for bumper tray center.	$176
1150-0062	Black vinyl lid with velcro fasteners for bumper tray driver side.	$176
1150-0063	Black vinyl lid with velcro fasteners for bumper tray officer side.	$176
1150-0064	Black vinyl lid with velcro fasteners for bumper tray center.	$176
1150-0065	Diamond plate lid for driver, center, and officer hose trays. 5.25" high with dual chrome grab handles, rubber hood latches and gas shocks.	$577
1150-0085	Nylon black strap on officer side front bumper tray (EA).	$76
1150-0086	Nylon black strap on driver side front bumper tray (EA).	$76
1150-0087	Nylon black strap on center front bumper tray (EA).	$76
1150-0094	Hinged diamond plate lid for driver side bumper tray. Includes D-Ring latch and gas shock hold open.	$293
1150-0095	Hinged diamond plate lid for center bumper tray. Includes D-Ring latch and gas shock hold open.	$321
1150-0096	Hinged diamond plate for officer side bumper tray. Includes D-Ring latch and gas shock hold open.	$293
1150-0097	Tray driver side bumper outboard for hydraulic/cord reel.	$672
1150-0098	Tray officer side bumper outboard for hydraulic/cord reel.	$672
1150-0100	Hinged floor of center bumper tray. Hinged to the rear.	$743
1150-0102	Diamond plate lid for driver hosetray. 5.25" high with chrome grab handle, rubber hood latch, gas shock and water stop angle.	$380
1150-0103	Diamond plate lid for center hose tray 5.25" high with chrome grab handle, rubber hood latch, gas shock and water stop angle.	$380
1150-0104	Diamond plate lid for officer hosetray. 5.25" high with chrome grab handle, rubber hood latch, gas shock and water stop angle.	$380
1150-0105	Diamond plate lid for center and driver hosetrays; 2/3 lid. 5.25" high with chrome grab handle, rubber hood latches, gas shocks and water stop angle.	$478
1150-0106	Diamond plate lid for center and officer hosetrays; 2/3 lid. 5.25" high with chrome grab handle, rubber hood latches, gas shocks and water stop angle.	$478
1150-0107	Nylon black strap with clip release on officer side front bumper tray.	$135
1150-0108	Nylon black strap with clip release on driver side front bumper tray.	$135
1150-0109	Nylon black strap with clip release on center front bumper tray. The strap shall be attached to the inboard side of the tray and shall not reduce the overall tray capacity	$135
1150-0111	Additional divider for front bumper hose tray.	$102
1150-0112	Hinged diamond plate lid for center bumper tray. Includes D-Ring latch and moon spring hold open.	$321
1150-0114	Access cover in center bumper tray for center bumper mounted speaker.	$91
1150-0115	Notch bumper tray lid for preconnected hose. Notch location: [#LOC].	$133
1150-0116	Bumper tray driver's side with slats 10 inches deep (approx 9 inches to slats).	$443
1150-0117	Bumper tray driver's side with slats 12 inches deep (approx 11 inches to slats).	$443
1150-0118	Bumper tray driver's side with slats 14 inches deep (approx 13 inches to slats).	$443

1150-0119	Bumper tray center of bumper with slats 10 inches deep (approx 9 inches to slats).	$443
1150-0120	Bumper tray center of bumper with slats 12 inches deep (approx 11 inches to slats).	$443
1150-0121	Bumper tray center of bumper with slats 14 inches deep (approx 13 inches to slats).	$443
1150-0122	Bumper tray officer's side with slats 10 inches deep (approx 9 inches to slats).	$443
1150-0123	Bumper tray officer's side with slats 12 inches deep (approx 11 inches to slats).	$443
1150-0124	Bumper tray officer's side with slats 14 inches deep (approx 13 inches to slats).	$443
1150-0125	Divider center bumper hose tray running front to back with adjustable track (Provides two storage areas, one left and one right of divider).	$232
1150-0126	Divider center bumper hose tray running side to side with adjustable track (Provides two storage areas, one ahead and one behind divider).	$232
1150-0127	Tray center of bumper with slats 34x13x16 with divider running side to side	$672
1150-0128	Notch front bumper tray for speaker/Q2B/radar. Will reduce front hose/equipment load. Center tray only.	$119
1150-0129	Diamond plate lid for center hosetray. Includes chrome grab handle, rubber hood latches and gas shock.	$380
1150-0130	Black nylon cargo net on center front bumper tray.	$290
1150-0131	Extinguisher tube in front bumper extension. Location: [#LOC].	$746
1150-0132	Tray center bumper for hydraulic/cord reel.	$733
1150-0137	Diamond plate lid for center hosetray and jumpline next to tray. 5.25" high with chrome grab handle, rubber hood latch, gas shock and water stop angle if applicable.	$438
1150-0138	Bumper pan driver's side without slats 4 inches deep with strap. For use with suction strainer only.	$443
1150-0139	Nylon black strap with aluminum quick release buckle for front bumper hose tray. Strap to attach to front and rear walls of tray down low as applicable. Location: [#LOC].	$111
1150-0140	Bumper tray center of bumper with slats 14 inches deep (approx 13 inches to slats). Mount tray 1" above gravel shield.	$529
1150-0141	Bumper tray officer's side with slats 12 inches deep (approx 11 inches to slats). Mount tray 1" above gravel shield.	$529
1150-0142	Hinged diamond plate lid for center bumper tray. Includes (4) sides, 1/4 turn latch and gas shock hold open. For use with raised compts only.	$379
1150-0143	Hinged diamond plate lid for officer bumper tray. Includes (4) sides, 1/4 turn latch and gas shock hold open. For use with raised compts only.	$379
1150-0144	Diamond plate lid for center hosetray and jumpline next to tray. 8.25" high with chrome grab handle, rubber hood latch, gas shock and water stop angle if applicable.	$496
1150-0145	Single crosslay on top of the front bumper gravel shield. Tray to be "U" shape, 10" wide x 8" high x the width of the gravel shield. Vinyl cover, [#COL], with end flaps to cover crosslay, velcro along front edge, fastened along back. Requires 24" extension.	$814
1150-0146	Water stop angle. Gravel shield mounted. Requires raised lid and/or 28" bumper extension with reel trays.	$189
1150-0147	Diamond plate lid for driver, center, and officer hose trays. 5.25" high with dual chrome grab handles, SS butterfly latches and gas shocks.	$656
1150-0149	Nylon black cargo net on sides for bumper crosslay.	$214
1150-0150	Double crosslay on top of the front bumper gravel shield. Tray to be "U" shape, approx 20" wide x 7.5" high x 90" wide minimum or as per application bumper width. Holds 200' of 1.75" DJ (each). Includes tri-fold diamond plate cover hinged at the front. Requires seperate side cover option and 28" extension.	$1,395
1150-0151	Booster Reel Roller Assembly. Locate in front of center bumper tray.	$339
1150-0152	Hinged diamond plate lid for officer side bumper tray. Includes D-Ring latch and gas shock hold open.	$293
1150-0157	Diamond plate raised full lid for extended front bumper. 6" high with dual chrome grab hands, rubber hood latches and gas shocks.	$689
1150-0158	Bumper tray center of bumper without slats 12 inches deep.	$302
1150-0160	Hinged smooth plate lid for center bumper tray. Includes D-Ring latch and gas shock hold open. Smooth plate lid will be painted with black Durabak.	$373
1150-0161	Double crosslay on top of the front bumper gravel shield. Tray to be "U" shape to hold 200' of 1.75" DJ (each). Includes bi-fold diamond plate cover hinged at the rear. Requires separate side cover option and 28" extension.	$1,395
1150-0162	Surface mounted tray center of bumper extension. Tray to be sized to fit between outboard reel trays and includes a 1" lip all the way around. Tray is for mounting of customer supplied hydraulic tools that will be utilized with reel applications.	$672
1150-0163	Tray officer side bumper next to front intake/discharge. Half moon style for 25' of 5" rolled hose.	$639
1150-0164	Bumper tray center of bumper with black Turtle Tile 14" deep (approx. 13.25" from tile). Includes: hinged diamond plate lid for center bumper tray with Tri-Mark latch, gas shock hold open and door ajar switch.	$915
1150-0165	Bumper tray driver's side without slats 10 inches deep.	$379
1150-0166	Bumper tray driver's side without slats 12 inches deep.	$379
1150-0167	Bumper tray driver's side without slats 14 inches deep.	$379
1150-0168	Bumper tray center of bumper without slats 10 inches deep.	$379
1150-0169	Bumper tray center of bumper without slats 12 inches deep.	$379
1150-0170	Bumper tray center of bumper without slats 14 inches deep.	$379
1150-0171	Bumper tray officer's side without slats 10 inches deep.	$379
1150-0172	Bumper tray officer's side without slats 12 inches deep.	$379
1150-0173	Bumper tray officer's side without slats 14 inches deep.	$379
1150-0174	Slatted Duradek flooring in driver side bumper tray.	$57

1150-0175	Slatted Duradek flooring in center bumper tray.	$57
1150-0176	Slatted Duradek flooring in officer side bumper tray.	$57
1150-0177	Notch front bumper tray for speaker/Q2B. Will reduce front hose/equipment load. Driver's side only.	$119
1150-0178	Hinged diamond plate lid for center bumper tray. Includes push button latch and gas shock hold open.	$295
1150-0179	Bumper tray center of bumper without slats 16 inches deep.	$379
1150-0180	Yellow vinyl lid with velcro fasteners for bumper tray center.	$176
1150-0181	Nylon black strap with aluminum quick release buckle for front bumper hose tray. Strap to attach to side walls of tray down low as applicable. Location: [#LOC].	$111
1150-0184	Vinyl [#COL] side covers for diamond plate bumper crosslay cover.	$181
1150-0185	Hinged diamond plate lid for center bumper tray. Includes push button latch and moon spring hold open.	$295
1150-0187	Nylon yellow strap with aluminium quick release buckle for front bumper hose tray. Strap to attach to front and rear walls of tray down low as applicable. Location: [#LOC].	$111
1150-0195	Bumper tray center of bumper with black Turtle Tile 14" deep (approx. 13.25" from tile).	$443
1150-0196	Tray officer side bumper next to front intake. Half moon style for 20' of 6" rolled hose.	$639
1150-0197	Nylon black strap with aluminium quick release buckle. Location: driver, officer and center top of front bumper gravel shield.	$330
1150-0198	Notch front bumper tray for speaker/Q2B. Will reduce front hose/equipment load. Officer's side only.	$119
1150-0199	Nylon black cargo net with bungee hold downs on sides for bumper crosslay.	$265
1150-0201	Notch front bumper tray for speaker/Q2B. Notch to be sized as close to obstacle as possible to provide more storage space in tray. Will reduce front hose/equipment load. Center only.	$119
1150-0204	Stainless steel roller assemblies for bumper crosslays. Includes side rollers only; no bottom. Replaces stainless scuff plates on bumper crosslays.	$281
1150-0205	Recessed bumper crosslay. Includes raised lid with outboard fixed panels for optional equipment. Requires 20" extension and side covers.	$3,341
1150-0206	Hinged diamond plate lid for center bumper tray. Includes push button latch chrome grab handle and gas shock hold open.	$342
1150-0207	Hinged diamond plate lid for center bumper tray. Includes 1/4 turn latch and moon spring hold open.	$295
1150-0208	Bumper tray officer's side without slats, approximately 14 inches deep, 17" front to rear X 9" in length side to side.	$443
1150-0209	Bumper tray driver's side without slats, approximately 14 inches deep, 17" front to rear X 17" in length side to side.	$443
1150-0210	Tray driver side bumper next to frame. Half moon style for 25' of 5" rolled hose.	$639
1150-0212	Nylon black strap with clip release on officer side front bumper tray running front to back.	$135
1150-0213	Bumper tray center of bumper (w/o slats) 10 inches deep.	$443
1150-0214	Traffic cone storage on front bumper extension. Cones to be oriented downard through a 7 3/4" hole in the gravelshield. Includes nylon strap with aluminum buckle. Location: [#LOC].	$367
1150-0215	Hinged diamond plate lid for center bumper tray. Includes 1/4 turn latch and two (2) gas shock hold open.	$322
1150-0216	Bumper tray lid(s) to be constucted using 3/16" aluminum ipos.	$141
1150-0217	Hinged diamond plate lid for officer side bumper tray 2/3 of length hinged 1/3 remaining length is fastened in place. Hinged inboard,/fixed portion outboard. Includes D-Ring latch and gas shock to hold open the hinged section.	$293
1150-0218	Bumper tray center of bumper with slats 12 inches deep (approx 11 inches to slats). Mount tray 1" above gravel shield.	$529
1150-0219	Additional gas shock on front bumper tray lid. Location: [#LOC].	$152
1150-0220	Tray driver side bumper outboard for hydraulic/cord reel, 18 inches deep IPOS.	$819
1150-0221	Tray officer side bumper outboard for hydraulic/cord reel, 18 inches deep IPOS.	$819
1150-0223	Bumper tray officer's side with slats 16 inches deep (approx 15 inches to slats).	$443
1150-0224	Bumper tray officer's side without slats located between front intake and frame extension. Tray to be approx 9" W (min) x 17" L x 14" D to hold 25' of 5" LDH.	$379
1150-0225	The rear wall of bumper tray to have louvers for additional ventilation. Location: [#LOC].	$173
1150-0226	Smooth plate raised full lid with black Durabak finish for extended front bumper. 6" high with dual chrome grab hands, rubber hood latches and gas shocks.	$1,417
1150-0228	Bumper tray driver's side of bumper with black Turtle Tile 14" deep (approx. 13.25" from tile).	$443
1150-0230	Bumper trough full length, mounted on top of gravel shield. Trough shall run side to side 4" high, 7" wide made from 3/16" smooth plate aluminum.	$237
1150-0231	Nylon black strap with aluminum quick release buckle for front bumper hose tray. Strap to attach to front and rear walls of tray as high as possible. Location: [#LOC].	$111
1150-0232	Hinged diamond plate lid for center bumper tray. Includes Tri-Mark latch and gas shock hold open.	$395
1150-0235	Diamond plate lid 3/16 " thick for driver, center, and officer hose trays. 5.25" high with dual chrome grab handles, SS butterfly latches and gas shocks.	$713
1150-0236	Recessed bumper double crosslay to hold of 200' of 1.75" DJ hose in each crosslay. The crosslay floor/bottom shall be slotted to allow drainage (no slats). Includes hinged bi-fold raised lid in center with outboard fixed panels for optional equipment and stainless steel scuff guards at each side of crosslay opening across bottom and sides. Requires 28" extension, side covers, 12" heavy duty bumper and engineering approval.	$3,613
1150-0237	Bumper tray driver's side without slats. Tray to be approx 17.5" W x 17"L x 14" D.	$379
1150-0238	Bumper tray officer's side without slats. Tray to be approx 11" W x 17"L x 14" D.	$379
1150-0239	Bumper trays shall have 1/2" drain holes IPOS.	$26
1150-0240	Recessed bumper tray centered full width 6.25" deep. Includes 5.25" raised lid centered. The gravel shield outboard of lid shall serve for mounting of optional equipment. Requires 20" extension and engineering approval.	$3,541

1150-0243	Bumper tray officer's side with slats 10 inches deep (approx 9 inches to slats). Mount tray 2" above gravel shield.	$529
1150-0245	Bumper tray driver's side with slats 10 inches deep (approx 9 inches to slats). Mount tray 2" above gravel shield.	$529
1150-0247	Hinged diamond plate lid raised 3" high for center bumper tray. Includes a single chrome grab handle, SS butterfly latches and gas shocks.	$360
1150-0248	Divider driver side bumper hose tray running side to side with adjustable track (Provides two storage areas, one ahead and one behind divider).	$232
1150-0249	Divider officer side bumper hose tray running side to side with adjustable track (Provides two storage areas, one ahead and one behind divider).	$232
1150-0250	Single crosslay on top of the front bumper gravel shield. Tray to be "U" shape, approx 10" wide x 7.5" high x 90" wide. Holds 200' of 1.75" DJ (each). Includes diamond plate cover hinged at the front. Requires seperate side cover, and 24" extension.	$1,093
1150-0252	Recessed bumper double crosslay. Includes 5.25" full width raised lid. The crosslay shall only be accessible through the top lid (no side access). The crosslay floor/bottom shall be slotted to allow drainage (no slats). The crosslay shall include an adjustable divider going from side to side to create a forward and rear crosslay run area. Requires 28" extension and engineering approval.	$4,133
1150-0253	Black nylon cargo net on driver side front bumper tray.	$290
1150-0254	Bumper tray driver side of bumper with slats 14 inches deep (approx 13 inches to slats) fabricated from smooth plate aluminum. Mount tray 2" above gravel shield. Outside facing surface of tray below bumper shall be painted black Durabak.	$618
1150-0255	Hinged smooth plate lid for driver side bumper tray. Includes D-Ring latch and gas shock hold open. Smooth plate lid will be painted with black Durabak.	$373
1150-0256	Bumper tray(s) to be constructed using smooth plate aluminum with exterior surface painted black Durabak.	$177
1150-0257	Recessed bumper double crosslay to hold of 200' of 1.75" DJ hose with pistol grip (raise lid an additional 1") in each crosslay. The crosslay floor/bottom shall be slotted to allow drainage (no slats). Includes hinged bi-fold raised lid in center with outboard fixed panels for optional equipment and polished stainless steel scuff guards at each side of crosslay opening across bottom and sides. Requires 28" extension, side covers, 12" heavy duty bumper and engineering approval.	$3,613
1150-0258	Recessed bumper double crosslay to hold of 200' of 1.75" DJ hose in each crosslay. The crosslay floor/bottom shall be slotted to allow drainage (no slats). Includes hinged bi-fold raised lid in center with outboard fixed panels for optional equipment and stainless steel rollers at each side of crosslay opening across bottom and sides. Requires 28" extension, side covers, 12" heavy duty bumper and engineering approval.	$3,759
1150-0259	Bumper tray full width of bumper (approx. 85") without slats 6" inches deep.	$825
1150-0260	Recessed bumper double crosslay to hold of 200' of 1.75" DJ hose in each crosslay. The crosslay floor/bottom shall be slotted to allow drainage (no slats). Includes full width hinged bi-fold raised lid and stainless steel scuff guards at each side of crosslay opening across bottom and sides. Requires 28" extension, side covers, 12" heavy duty bumper and engineering approval.	$4,004
1150-0261	Diamond plate lid for driver, center, and officer hose trays. approx 6.25" high or as applicable to allow for jumpline swivel to be under lid pre-connected. with dual chrome grab handles, SS butterfly latches and gas shocks.	$695
1150-0262	Vinyl cover for bumper tray notch. Includes diamond plate over perimeter of cover.	$244
1150-0263	Recessed bumper crosslay to hold of 150' of 1.75" DJ hose. The crosslay floor/bottom shall be slotted to allow drainage (no slats). Includes full width flat lid. Requires 20" extension, side covers and 10" heavy duty bumper.	$3,341
1150-0264	Recessed bumper double crosslay to hold 200' of 1.75" DJ hose in each crosslay with a nozzle as applicable. The crosslay floor/bottom shall be slotted to allow drainage (no slats). Includes hinged bi-fold full width raised lid for open full access to crosslays when open and stainless steel scuff guards at each side of crosslay opening across bottom and sides. Requires 28" extension, side covers, 12" heavy duty bumper and engineering approval. Lid shall be raised approx 5.25" above top of bumper for capacity to ensure ease of use with a nozzle. Lid to be secured in closed position with S/S Butterfly latches. Capacity may be affected and may require a compact nozzle depending on hose selection as loaded.	$3,809
1150-0265	One continuous recessed bumper tray extending over the center and driver side of the bumper shall be provided with a raised 5.25" lid centered side to side.	$3,541
1150-0266	Smooth plate raised full lid with black Durabak finish for extended front bumper. 6" high with one 24" Haralson Metals Stainless knurled handrail in place of grab handles centered on the lid, butterfly latches on side and gas shocks.	$1,465
1150-0269	Bumper tray to be constucted using 3/16" aluminum ipos.	$98
1150-0270	Tray officer side bumper next to frame. Half moon style for (3) 50' sections of 1.5" rolled hose.	$639
1150-0271	Tray driver side bumper next to frame. Half moon style for (6) 50' sections of 1" rolled hose.	$639
1150-0272	Raised lid over bumper tray to be extended over jumpline swivel on top of gravel shield. For use with 2" swivel only.	$57
1150-0273	Nylon black cargo net with black powder coated quick release buckles on sides for bumper crosslay.	$312
1150-0274	Stainless steel roller assemblies for bumper crosslays. Includes side rollers and bottom. Replaces stainless scuff plates on bumper crosslays.	$291
1150-0275	Hinged smooth plate lid for center bumper tray. Includes 1/4 turn latch and gas shock hold open. Smooth plate lid will be painted black Durabak.	$368
1150-0276	Nylon black strap with aluminum quick-release buckle. Location: driver, officer and (2) center top of front bumper gravel shield.	$443

1155-0001	Receiver under body rearward of wheel well (PR) for winch or rope use (does not include 12V power plug).	$3,173
1155-0002	Winch, electric front mounted Ramsey 12,000 lb. Includes access door with quarter turn latch and spring hold open device.	$3,968
1155-0003	Winch Warn Series 8 - 8,000lb with 125' 3/8" plated cable.	$3,407
1155-0005	Winch, Warn Series 12, 12,000 lb. with 125' 3/8" plated cable. Includes access door with quarter turn latch and spring hold open device. Locate: Mounted to the chassis frame extension centered at the front bumper area.	$4,990
1155-0013	Winch, Warn Series 12, 12,000 lb. with 125' 3/8" plated cable. Includes access door, hinged rearward that is smooth plate alum (IPO tread) and painted with black Scorpion brand coating inside and outside surfaces (smooth finish). Latch to be D-Ring style (IPO std. 1/4 turn latch). Lid to have 1 gas shock.	$5,114
1155-0014	A 6000 lb Warn multi-mount (portable) electric reversible winch with 125' of 3/8" plated wire rope and a replaceable clevis hook shall be installed and shall be controlled with a 12' remote control switch. Includes rollers.	$2,179
1155-0016	20,000lb Hydraulically Driven Winch. Ramsey Model H800R (Mfg.Part# 124410) Hydraulic Winch with Dow-Lok Clutch, roller guide assembly, minimum 200' of 5/8" Wire Rope Assembly, Winch Mounting Brackets, PTO and Hydraulic Pump. Maudlin to supply and install winch, E-One to complete installation.	$13,071
1155-0018	Winch, Warn Series 12-S Spydura Pro, 12,000 lb. with 100' of 7/16" synthetic rope and Hawse fairlead. Includes access door with quarter turn latch and spring hold open device.	$5,576
1160-0000	Bumper 10" stainless steel.	$1,241
1160-0001	Bumper 12" high swept back stainless steel.	$1,404
1160-0002	Bumper reinforcement backing. For use with 10" SS or heavy duty bumpers only.	$440
1160-0008	3/16" Front Bumper Gravel Shield.	$126
1160-0012	12" Front Bumper Gravel Shield Extension.	$140
1160-0013	16" Front Bumper Gravel Shield Extension.	$268
1160-0014	20" Front Bumper Gravel Shield Extension.	$476
1160-0015	24" Front Bumper Gravel Shield Extension.	$630
1160-0016	28" Front Bumper Gravel Shield Extension.	$761
1160-0020	License plate holder mounted center of front bumper.	$39
1160-0021	Number plate, removable size to fit between air horns on front bumper. Spaced out from face of bumper so plate can be removed.	$171
1160-0030	Steel tow bar located below front bumper mounted to chassis extensions for towing purposes only, painted black.	$1,790
1160-0031	Notch front bumper for low "S" type front intake. Includes tray below pipe extending from cab to bumper.	$1,055
1160-0034	8" Front Bumper Extension.	$140
1160-0041	Heavy duty front bumper 10" high with full wrap around. To be painted job color.	$2,177
1160-0042	Heavy duty front bumper 10" high with full wrap around. To be painted 767681 EG black.	$2,177
1160-0049	License plate holder mounted officer side of front bumper.	$39
1160-0050	12" heavy duty front bumper with full wrap around. To be painted L0318EG metallic silver.	$2,177
1160-0051	3/16" Front Bumper Gravel Shield. Smooth plate painted with black Durabak.	$1,306
1160-0052	Recessed winch receiver in front bumper for model QM5000 portable winch. Includes swing down front center section of bumper for winch access, bumper reinforcement, winch enclosure, raised lid, and port winch wiring. For use on E-ONE chassis with 10" high 28" ext bumper only.	$4,721
1160-0053	14" Front Bumper Gravel Shield Extension.	$205
1160-0054	Overlay front heavy duty bumper with diamond plate panels.	$372
1160-0055	Guard straps for bumper mtd recessed Q2B - polished stainless steel.	$297
1160-0060	Dock bumpers (4) on front bumper equally spaced (as applicable).	$295
1160-0061	10" heavy duty front bumper with full wrap around. To be painted L0318EG metallic silver.	$2,177
1160-0064	Heavy duty front bumper 10" high with full wrap around. To be painted [#COL].	$2,177
1160-0065	Heavy duty front bumper 10" high with full wrap around. Center of bumper to have a 5" deep notch for recessed Q2B. Bumper to be painted job color.	$2,702
1160-0066	License plate holder mounted driver side of front bumper.	$39
1160-0068	1/8" Front Bumper Gravel Shield. Smooth plate painted with black Durabak.	$1,306
1160-0084	Heavy duty 12" front bumper with full wrap around. To be painted job color.	$2,177
1160-0086	Removable number plate with mounting brackets. Locate centered on front bumper. Plate to be painted job color. Plate to be 8"W x 8"H. Lettering and/or graphics not included.	$255
1160-0088	Removable number plate with mounting brackets. Locate [#LOC]. Plate to be painted job color. Plate to be 12"W x 8"H. Lettering and/or graphics not included.	$255
1160-0094	18" Front Bumper Gravel Shield Extension.	$373
1160-0095	Heavy duty front bumper with full wrap around. To be painted FLNA 91733 silver.	$2,177
1160-0104	Swing down front section of bumper. 10" front bumper only. Requires extended front bumper and bumper reinforcement.	$1,129
1160-0105	Removable number plate with mounting brackets. Locate [#LOC]. Plate to be painted lower job color (if cab is painted two tone). Plate to be 14"W x 8"H. Lettering and/or graphics not included.	$280
1160-0108	3/16" Front Bumper Gravel Shield. Smooth plate painted with black Scorpion coating.	$1,306
1160-0116	Heavy duty front bumper 10" high with full wrap around. Driver side of bumper to have a 5" deep notch for recessed Q2B. Bumper to be painted job color.	$2,702
1160-0117	License plate holder mounted driver side of front bumper.	$39
1160-0120	1/8" Front Bumper Gravel Shield. Includes 1" return break on each side of heavy duty bumper.	$154
1160-0121	Diamond plate lower gravelshield. Located under side of the front bumper extension.	$743

1160-0122	20" Front Bumper Gravel Shield Extension. The extension shall extend further forward and each side to align with the edge of the bumper.	$545
1160-0123	10 GA brushed stainless steel overlay on front face of 12" heavy duty bumper.	$573
1160-0124	Heavy duty 12" front bumper with full wrap around. To be painted the same as the upper area two tone job color.	$2,177
1160-0125	Heavy duty front bumper 10" high with full wrap around. Officer side of bumper to have a 5" deep notch for recessed Q2B. Bumper to be painted job color.	$2,702
1160-0127	2" lip on rear and sides of gravelshield. See photos on file with sales.	$419
1160-0128	Bumper guide (PR). RoDon 60" red/white fiberglass with spring mount. To be installed at final inspection.	$179
1160-0129	License plate holder hinge mounted below center of front bumper.	$76
1160-0131	1/8" Front Bumper Gravel Shield for heavy duty bumper. Includes 1" turn down around perimeter of HD bumper.	$208
1160-0133	Heavy duty front bumper 10" high with full wrap around. Center of bumper to have a 5" deep notch for recessed Q2B. Bumper to be painted 2-tone job color.	$2,702
1160-0136	Bumper guide pinned (PR).	$486
1160-0137	Heavy duty 12" front bumper with full wrap around. To be painted [#COL].	$2,177
1160-0138	3/16" Front Bumper Gravel Shield. Extend shield to flush with heavy duty bumper edge.	$517
1160-0140	3/16" Front Bumper Gravel Shield for heavy duty bumper. Includes 1" turn down around perimeter of HD bumper.	$333
1160-0141	3/16" Front Bumper Gravel Shield with 1" turn down lips to protect the top edge of the heavy duty bumper from damage. Smooth plate painted with black Durabak.	$1,355
1160-0144	Heavy duty 12" front bumper with full wrap around. Center of the bumper to be extended (boxed out) for Q2B to be recessed without intruding into the bumper trays, recessed crosslays or any other options as applicable. To be painted [#COL].	$2,817
1160-0145	Notch front bumper for low "S" type front intake. 10" deep tray below pipe extending from cab to bumper to hold at minimum 25' of 5" LDH. Include nylon strap (seat belt type) for tray.	$1,867
1200-0018	T handle transmission selector.	$1,484
1200-0020	TransSynd synthetic transmission fluid for EVS3000.	$186
1200-0021	TransSynd synthetic transmission fluid for EVS 4000.	$292
1200-0062	The engine oil and transmission dip sticks to have tags. Tags to be attached to each by cable. Use colored tag to match dip stick color.	$149
1200-0063	The engine oil dipstick to have yellow handle and the transmission dipstick to have a red handle.	$211
1200-0065	Transfer Case for All Wheel Drive- single speed with front axle declutch	$9,400
1200-0076	Transmission to be 4500 in place of the 4000. Gears 1 through 4 shall be programmed as "D" (Drive). Gear 5 to be programmed to activate via "mode" switch on shifter.	$2,910
1200-0083	Transmission re-programming. "D" allows transmission to shift from 1st - 4th gear, and "Mode" allows 5th gear.	$657
1200-0115	Polyurethane engine mounts. Cummins engines only.	$106
1200-0233	Eng/Trans Cummins ISL 330HP/EVS3000 2013 EPA compliant engine.	$75,899
1200-0234	Eng/Trans Cummins ISL 350HP/EVS3000 2013 EPA compliant engine.	$78,623
1200-0235	Eng/Trans Cummins ISL 400HP/EVS3000 2013 EPA compliant engine.	$91,511
1200-0236	Eng/Trans Cummins ISL 450HP/EVS3000 2013 EPA compliant engine.	$92,301
1200-0237	Eng/Trans Cummins ISX12 400HP with EVS4000 transmission. 2013 EPA Compliant.	$117,278
1200-0238	Eng/Trans Cummins ISX12 450HP with EVS4000 transmission. 2013 EPA Compliant.	$118,712
1200-0239	Eng/Trans Cummins ISX12 500HP with EVS4000 transmission. 2013 EPA Compliant.	$120,144
1200-0241	Eng/Trans Cummins ISX15 550HP with EVS4000 transmission. 2013 EPA Compliant.	$126,732
1200-0242	Eng/Trans Cummins ISX15 600HP with EVS4000 transmission. 2013 EPA Compliant.	$129,879
1200-0245	Eng/Trans Cummins ISX12 500HP with EVS4500 transmission. 2013 EPA Compliant.	$121,992
1200-0270	Eng/Trans Cummins ISL 380HP/EVS3000 2013 EPA compliant engine.	$86,356
1200-0275	Eng/Trans Cummins ISL 450HP/EVS3000 2013 EPA compliant engine. For use with Hush rear engine chassis only.	$92,301
1225-0005	Exhaust heat shield. Locate below compartment floor.	$180
1225-0006	Exhaust tip stainless steel for Plymovent. For exhaust extraction system.	$340
1225-0008	Wrap exhaust with heat tape from the turbo down to the flex pipe. Inspect after install for tears in material. Wrap outside with wire mesh to ensure material remains affixed.	$812
1225-0009	Anchor plate for Nederman exhaust system. For use with standard nozzle. Ship Loose.	$253
1225-0012	Ward No Smoke Exhaust System.	$16,914
1225-0013	Tailpipe support. Locate between tailpipe and body approx 10" in from edge of body.	$513
1225-0014	Exhaust driver side custom chassis.	$599
1225-0015	Vertical exhaust officer side. This will include the vertical exhaust support.	$1,574
1225-0016	Locate exhaust end between rear of compartment ahead of wheels and ahead of forward wheel well angle at approx. 45 degrees to rear.	$232
1225-0017	Vertical exhaust elbow chrome plated 90 degree. Due to high heat from 2007 and later emission exhaust systems, dis-coloring of exhaust end may occur after prolonged use.	$299
1225-0020	Exhaust tip MagneGrip. For exhaust extraction system. Tip to protrude appox. 2" outside of body (Not rubrail).	$623
1225-0021	Cover exhaust with blanket from the turbo down to the flex pipe (as applicable). Visually inspect after install for tears in material.	$288
1225-0024	Plymovent Grabber magnetic exhaust end. Bolt-on for exhaust extraction system.	$415
1225-0025	Vertical exhaust officer side. This will include the vertical exhaust support. Locate to forward area of module (internal) with exhaust end being approx. 6" above ladders stowed on ladder rack.	$1,782
1225-0026	Rain cap vertical exhaust chrome.	$86

1225-0031	Wrap exhaust with heat tape from the turbo down to the muffler. Visually inspect after install for tears in material. Wrap outside with wire mesh to keep material from coming off.	$859
1225-0033	Exhaust diverter. Diverts exhaust from officer side to driver side. Includes well labeled switch accessible to driver.	$5,213
1225-0035	Exhaust end for Plymovent. For exhaust extraction system. Exhaust to be angled rearward to allow for possible deflection if impacted.	$462
1225-0039	Modify the tailpipe to discharge straight out of a side panel located below R1 compartment but above the bottom edge of the body. Exhaust tip to be MagneGrip for exhaust extraction system. .	$938
1225-0042	Firwin exhaust blanket from the turbo down to the DPF. Includes shield over DPF.	$686
1225-0043	Exhaust end for Plymovent. For exhaust extraction system. Set back approx. 4" from exhaust end. Includes "Caution Hot" label above exhaust on side of body.	$282
1225-0048	Exhaust outlet cooling tip.	$229
1225-0050	Vertical exhaust stack pipe straight chrome plated with rain cap. Due to high heat from 2007 and later emission exhaust systems, dis-coloring of exhaust end may occur after prolonged use.	$380
1225-0051	Exhaust diverter. Diverts exhaust from officer side to vertical. Includes well labeled switch accessible to officer.	$5,213
1225-0052	Vertical exhaust officer side through body forward of R2. This will include shortening the existing standard tailpipe and adding the vertical exhaust to standard lower exhaust piping from connection point below rear section of R1 forward of wheel in supplied body cavity. Exhaust stack shall be mounted to supplied body provisions and shall have aluminized piping from lower elbow as attached to existing tail pipe up to upper stack. The upper stack and rain bonnet flap shall be chrome and shall extend up through outer compartment top to available OAH per customer requirements or Approx. 15.50" to topmost bonnet point. The bonnet shall be positioned where it opens outward of the body to expell exhaust away from apparatus.	$1,057
1250-0003	Frame 10.25 x 3.5 x .375 chassis.	$5,391
1250-0006	Frame liner 9.375 x 3.125 x .375.	$2,969
1250-0011	Rear underbody support frame.	$566
1250-0013	Main frame - 12.0x3.5x.375 with 11.125 liner and 10" step. Step frame - 10.25x3.5x.375 with 9.375 liner.	$20,635
1250-0025	Frame 12 x 3.5 x .375 chassis.	$5,391
1250-0028	Rear heavy duty underbody support frame.	$1,510
1250-0057	Rear underbody support frame. SS product.	$566
1250-0061	Frame liner "L" 8.875 x 3.125 x .375.	$2,755
1250-0065	Rear chassis subframe for Urban Interface pumper. Raises bottom of chassis approx 4". For use with 12" frame rails and FS-25 front axle only.	$2,263
1250-0066	Rear chassis subframe for 4x4. Raises bottom of chassis 9.375". For use with 12" frame rails and AxleTech 4000 front axle only.	$2,718
1250-0067	Chassis frame rails shall be zinc plated (galvanized) IPOS. Includes rear subframe rails (if applicable).	$1,937
1250-0068	Chassis frame rails, front frame extensions, rear subframe (Urban Interface), crossmembers and battery brackets shall be zinc plated (galvanized) IPOS.	$4,682
1250-0069	Chassis frame rails, front frame extensions, rear 4x4 / 6x6 subframe, crossmembers and battery brackets shall be zinc plated (galvanized) IPOS.	$5,058
1250-0070	Chassis frame liner shall be zinc plated (galvanized) IPOS.	$496
1250-0074	Rear underbody support frame with side tow eye style frame brackets without lower tow eyes to minimize impact on departure angle. To be used with frame mounted tow eyes facing rearward from frame rails.	$967
1350-0001	Dual fuel fill package. Additional fuel fill provided on officer side of unit.	$495
1350-0003	Fuel system 50 gallon.	$1,475
1350-0005	Fuel system 65 gallons.	$1,558
1350-0006	Fuel system 100 gallons	$2,233
1350-0008	Fuel water separator Fuel-Pro 382. Filter is top serviceable.	$675
1350-0009	Fuel line hose braided.	$288
1350-0010	Fuel pick-up for generator or pump. Includes hoses run to generator compartment.	$133
1350-0011	Fuel pump electric w/re-prime.	$409
1350-0012	Fuel shut-off valve. Location: [#LOC].	$104
1350-0013	Racor fuel/water separator to be a bottom drop out style. Shall include indicator light and audible alarm.	$713
1350-0014	Thermal control in-line fuel heater.	$474
1350-0015	Locking fuel cap (PR) ARFF.	$174
1350-0023	Fuel cooler, to be routed from the discharge side of the pump to the chassis fuel line. Cooler to be functioning when the pump is in operation.	$453
1350-0025	Fuel line hose braided. Includes re-usable fittings on both ends of the hose.	$288
1350-0026	Fuel Lines Wrapped in Thermal Loom	$849
1350-0027	Fitch fuel catalyst drop in style	$779
1350-0028	Additional Fuel Sender in tank. For future use only. No wiring.	$361
1350-0029	Racor fuel separator. To allow fuel flow to primary or secondary (back-up) fuel separator. Control valve to be located in pump compartment access in walkway with labeling. Locate adjacent to primary Racor unit.	$1,111
1350-0037	Fuel system w/65 gallon stainless steel tank.	$2,736
1350-0043	Fuel system w/50 gallon stainless steel tank.	$2,515
1350-0046	Fuel water separator Fuel-Pro 382 with light and alarm. Filter is top servicable.	$779
1350-0048	Fuel system 100 gallons. Tank located above framerails to rear of cab.	$2,233
1350-0049	Fuel system 85 gallons. Tank located above framerails to rear of cab.	$2,233

1350-0052	Fuel system 75 gallons.	$1,895
1350-0053	Racor model 4120R1230 fuel/water separator.	$792
1350-0054	Fuel water separator Fuel-Pro 382 with light and alarm. Filter is top servicable.	$779
1350-0057	Fuel line hose silicone.	$288
1400-0002	Battery four group 31 1000 CCA.	$977
1400-0003	Battery six group 31 1000 CCA.	$1,461
1400-0010	Battery six Delco 1150 Hi-Cycle 700 CCA.	$1,287
1400-0013	Battery four group 31 1000CCA. (3) batteries driver side, (1) battery officer side w/ available space for additional (2) batteries on officer side.	$1,220
1400-0014	Mount (3) 100A fuses, (2) 40A fuses near officer batteries. 100A fuse to manual trip, manual reset type. Wire (3) 2AWG red battery cables from comm box to 100A fuses. Provide jumpers from fuses to batteries. Wire 8AWG wires from comm box to 40A fuses. Route 2AWG cables into officer comm box, under bottom shelf and up through inboard side of shelf. Route through wireway to driver side comm box. Leave 4ft of excess in comm box.	$385
1400-0020	Relocate custom chassis batteries. Location: [#LOC].	$1,034
1400-0021	Six (6) Odyssey Group 31 1000CCA Batteries. Locate (3) each side of the chassis.	$3,721
1400-0023	Battery six Delco 1110 Hi-Cycle 750CCA.	$1,287
1400-0024	Jumper studs to be located below driver's side front corner of body (or pump module if equipped). Studs to face down with positive stud outboard.	$209
1400-0027	Additional set of jumper studs. Location: Opposite standard location.	$355
1400-0028	Battery six Optima model D31T 900CCA.	$3,405
1400-0031	Stainless steel battery trays with stainless steel covers.	$1,455
1400-0032	Battery five group 31 1000 CCA (two left / three right). For use with below cab DEF tank only.	$1,220
1400-0033	Heater pads for (4) Group 31 battery system. Wire pads to block heater receptacle.	$997
1400-0034	Stainless steel battery trays.	$494
1400-0036	Battery six group 31 1000CCA. Deka model 1231MF.	$1,691
1400-0037	Battery rollout tray in body compartment R1.	$667
1400-0038	Battery two 8D 1400 CCA.	$1,194
1400-0039	Battery five Optima model D31T 900CCA.	$3,012
1400-0040	Battery set additional two group 31 1000 CCA. Location: [#LOC].	$541
1400-0042	Jumper studs to be located below driver's side front corner of body (or pump module if equipped). Studs to face outboard.	$209
1400-0043	Jumper studs to be located below driver's side front corner of body. Studs to face outboard.	$209
1400-0046	Heater pads for (5) Group 31 battery system. Wire pads to winterization shoreline receptacle.	$1,148
1400-0047	Battery six group 31 1000 CCA. For use with 67.5"/80" cab with 10G DEF under driver side of cab.	$2,265
1400-0048	Battery five group 31 1000 CCA (two left / three right).	$1,220
1510-0000	Seat cavity cover (EA).	$170
1510-0035	Universal air pack bottle bracket (EA). Location: [#LOC].	$149
1510-0038	Driver seat 911 air ride.	$912
1510-0039	Driver seat to be 911 air ride with SCBA back	$1,084
1510-0040	Officer seat to be 911 air ride	$912
1510-0041	Officer seat 911 air ride SCBA.	$1,084
1510-0042	Officer seat to be 911 fixed SCBA.	$885
1510-0043	Driver seat to be Bostrom air ride.	$1,009
1510-0044	Driver seat to be Bostrom air ride with SCBA back	$1,170
1510-0045	Officer seat to be Bostrom air ride.	$1,009
1510-0046	Officer seat to be Bostrom air ride SCBA.	$1,170
1510-0047	Officer seat to be Bostrom fixed SCBA.	$980
1510-0048	Driver seat to be 911 electric.	$1,360
1510-0049	Driver seat to be Bostrom electric.	$1,454
1510-0050	Rear facing 911 seat with SCBA driver's side.	$761
1510-0051	Engine cover 911 one man bench with SCBA	$997
1510-0052	Engine cover 911 two man bench with SCBA.	$1,684
1510-0053	Rear facing 911 seat with SCBA officer's side.	$761
1510-0054	Rear facing Bostrom seat with SCBA driver's side.	$733
1510-0055	Engine cover Bostrom one man bench with SCBA	$1,025
1510-0056	Engine cover Bostrom two man bench with SCBA.	$1,706
1510-0057	Rear facing Bostrom seat with SCBA officer's side.	$733
1510-0058	Fold down 911 seat located [#LOC]	$409
1510-0059	Fold down 911SCBA seat located [#LOC].	$903
1510-0060	Fold down Bostrom seat located [#LOC].	$409
1510-0061	Fold down Bostrom SCBA seat located [#LOC].	$849
1510-0062	Two man bench centered on rear wall with 911 SCBA backs. Includes angled corners.	$1,298
1510-0063	Two man bench centered on rear wall with Bostrom SCBA. Includes angled corners.	$1,600
1510-0064	Four man bench centered on rear wall with 911 SCBA	$3,057
1510-0065	Four man bench centered on rear wall with Bostrom SCBA.	$2,814
1510-0066	One man bench centered on rear wall with 911 SCBA	$1,056
1510-0067	One man bench centered on rear wall with Bostrom SCBA	$1,152
1510-0068	Three 911 SCBA seats rear facing, one outboard driver, one outboard officer, one centered.	$2,286
1510-0069	Three 911 SCBA seats rear facing, one outboard driver, one outboard officer, one centered for top mount enclosed cab only. The outboard seats to be angled 30 degrees inward.	$2,286
1510-0070	Three Bostrom SCBA seats rear facing, one outboard driver, one outboard officer, one centered. For top mount enclosed cab only.	$2,453
1510-0071	SEAT 911 3 RR FACING TME 30DEG	$2,453

1510-0076	Bostrom SCBA seats forward facing center of rear wall (PR). Free standing with individual risers on rear wall.	$1,954
1510-0078	Three individual forward facing 911 Imperial 1200 gray attendant seats with flip up bottom seat cushions. Bottom cushions to be large as possible.	$2,640
1510-0079	Rear Seat Riser Storage. Includes smooth plate doors with push-button latches and 250lbs. slide out trays- (1) each side. Compartment opening to be 17" w x 10" h and transverse side to side. Riser to be Zolatone gray.	$2,603
1510-0080	Officer seat to be 911 attendant.	$641
1510-0081	Cab occupant detection seating system. Wired to visual indicator (hazard light). Includes audible alarm. Requires multiplex electrical system.	$4,480
1510-0082	Zico Quic-Hold mechanical air pack bottle bracket for 5" bottle (ea). Model MWAB with adjustable footplate and pull release strap. Location: [#LOC].	$537
1510-0083	911 Attendant seat with individual riser (PR). Locate centered on rear wall.	$2,184
1510-0084	Officer seat to be Bostrom electric	$1,454
1510-0085	Custom logo embroidery (EA). Bostrom seats only. Requires set-up sales code.	$130
1510-0086	Embroidery set-up for Bostrom cab seats.	$663
1510-0087	Center rear wall seats to be mounted approximately 11" apart.	$231
1510-0088	911 SCBA seats forward facing center of rear wall (PR). Free standing mtd on a common seat riser.	$2,041
1510-0089	Tailbone pad for jump seat(s). (Reference print #634894)	$48
1510-0090	One man bench (PR) on rear cab wall with Bostrom SCBA back. Location: driver and officer side outboard.	$1,603
1510-0091	Zico Quic-Hold mechanical air pack bottle bracket (EA). Model QLM-U with adjustable footplate and pull release. Location: [#LOC].	$650
1510-0092	Two man bench centered on rear wall with bench seat style back cushion and angled riser corners.	$1,252
1510-0093	Custom logo embroidery (EA). Seats Inc. seats only. Requires set-up sales code.	$144
1510-0094	Embroidery set-up for Seats Inc. 911 cab seats.	$879
1510-0095	Driver seat Bostrom electric with integral seat belt.	$1,619
1510-0096	Officer seat Bostrom electric with SCBA back with integral seat belt.	$1,928
1510-0097	Rear facing seat driver side Bostrom with SCBA back and integral seat belt.	$821
1510-0098	Rear facing seat officer side Bostrom with SCBA back and integral seat belt.	$821
1510-0099	Rear wall seat Bostrom flip-up with SCBA back and integral seat belt. Location: [#LOC].	$1,138
1510-0100	Padded headrest for fold down jump seat (EA). Not available with rear wall windows.	$119
1510-0101	Driver and officer outboard rear facing seats mounted at 30 degree angle. Includes upper seat belt brkt. adjusted to rear of cab.	$473
1510-0104	911 SCBA seat forward facing center of rear wall. Free standing mtd on seat riser.	$1,023
1510-0105	One man bench (PR) on rear cab wall with Seats 911 SCBA back. Location: driver and officer side outboard.	$1,301
1510-0106	911 SCBA seats forward facing rear wall (PR). Equally spaced with individual risers on rear wall.	$2,041
1510-0116	Fold-down seat located [#LOC].	$407
1510-0117	Bostrom SecureAll mechanical air pack bottle bracket (EA). Location: [#LOC].	$517
1510-0118	Flip-up 911 SCBA seat located [#LOC].	$929
1510-0119	Flip up Bostrom SCBA seat located [#LOC].	$959
1510-0120	Flip up 911 attendant seat located [#LOC].	$1,014
1510-0121	Flip up Bostrom attendant seat located [#LOC].	$1,129
1510-0122	Fold down seat with 911 SCBA back located [#LOC].	$906
1510-0123	Fold down seat with Bostrom SCBA back located [#LOC].	$919
1510-0124	Officer seat fixed Bostrom with SCBA back and integral seat belt.	$951
1510-0126	CrewGuard occupant seating detection system. Display location: [#LOC].	$3,351
1510-0127	Additional CrewGuard display. Location: [#LOC].	$267
1510-0128	FlameFighter air pack bottle bracket (EA). Model 17000 with adjustable footplate and push-button release. Location: [#LOC]	$521
1510-0129	Two man bench centered on rear wall with Bostrom SCBA backs for use with ALS provision with side access only. Includes (1) horizontally hinged door on the front of the rear bench seat for access to storage below bench.	$2,023
1510-0130	Flip up Bostrom ABTS attendant seat located [#LOC].	$1,054
1510-0131	Bostrom SecureAll mechanical air pack bottle bracket (EA) for bench / fold-down seat. Location: [#LOC].	$634
1510-0132	Rear Seat Riser Storage. Includes smooth plate doors with push-button latches on sides and front (access to battery charger). Side access is to SCBA storage (2) bottles. Bottles to be stored on plastic trays with vecro strapping to secure bottles with unit in motion. Side compartment openings to be 17" w x 10" h x 26" d. Front access to be a drop down door with push-button latches. Riser and doors to be cab interior color.	$2,551
1510-0133	Adjust rear facing outboard seats as far inboard as appicable next to engine cover.	$115
1510-0134	Rear wall seat Bostrom air ride Sierra non SCBA. Includes single riser. N/A with outboard rear wall seats. Storage below seat N/A. Location: [#LOC].	$1,338
1510-0135	Arm rest installed on both sides of the seat. Location: [#LOC].	$488
1510-0136	Center rear wall seats to be mounted approximately 5" apart. C2X/T2X only.	$231
1510-0137	Bostrom SCBA seat forward facing center of rear wall. Free standing mtd on seat riser.	$1,032
1510-0138	Two man bench centered on rear wall with (1) 911 SCBA back driver and (1) bench back cushion officer.	$1,140
1510-0144	FlameFighter model 14000 air pack bottle bracket with model 39015 safety strap (EA). Location: [#LOC]	$223

1510-0146	911 AIR SCBA seats forward facing center of rear wall (PR). Free standing with individual risers on rear wall.	$2,932
1510-0147	911 SCBA seats forward facing rear wall (3). Equally spaced with common riser on rear wall. Extended cab with medium doors only.	$3,061
1510-0148	Rear facing 911 attendant seat driver's side.	$641
1510-0149	Rear facing 911 attendant seat officer's side.	$641
1510-0150	Two man bench centered on rear wall with (1) Bostrom SCBA back officer and (1) bench back cushion driver.	$1,442
1510-0153	Bostrom SCBA seats forward facing center of rear wall (PR). Free standing mounted on a common seat riser.	$1,954
1510-0154	Three man bench offset to driver on rear wall with Bostrom SCBA backs for use with ALS provision with officer side access only. Includes provision for rear heaters mounted below bench.	$2,538
1510-0155	Bostrom SCBA seats forward facing rear wall (3). Equally spaced with common riser on rear wall. Extended cab with medium doors only.	$2,872
1510-0185	Rear facing seat center rear engine cover Bostrom with SCBA back and integral seat belt.	$900
1510-0186	Driver and officer outboard rear facing seats mounted at 10 degree inboard angle.	$473
1510-0200	Department patch sewn on Bostrom seat (EA). Requires customer supplied department patch for each seat.	$103
1510-0203	Bracket SCBA Lifeguard SmartDock Gen2 restraint system. Location: [#LOC].	$480
1510-0204	Officer seat to be 911 electric SCBA	$1,914
1510-0206	Zico electric hands-free air pack bottle bracket (EA). Model QM-ELB with adjustable footplate. Bracket release will be activated with park brake. Location: [#LOC].	$697
1510-0209	Driver seat to be 911 attendant. Includes forward and aft adjustment.	$641
1510-0210	Two man bench centered on rear wall with bench style back cushion for use with ALS provision with side access only.	$1,674
1510-0211	Driver seat to be Bostrom air ride with integral seat belt.	$1,797
1510-0212	Officer seat to be Bostrom SCBA air ride with integral seat belt.	$2,496
1510-0213	Rear wall seat riser to be 16" in height. Vista cabs only.	$143
1510-0214	Rear wall seat riser to be raised 4" in height. Includes 2" bench seat cushion thickness reduction for non-vista roofs.	$143
1510-0217	Arm rest rear wall (PR). Located outboard of bench seat on seat support channel.	$411
1510-0226	Officer seat to be Bostrom fixed attendant.	$620
1510-0228	Three man bench center on rear wall with 911 SCBA backs. Includes provision for rear heaters mounted below bench (if equipped).	$2,808
1510-0229	(2) Flip up Bostrom attendant seats with common riser located center on rear wall.	$2,255
1510-0233	Three man bench center on rear wall with Bostrom SCBA backs. Includes provision for rear heaters mounted below bench (if equipped).	$2,538
1510-0235	Two man bench centered on rear wall with Seats 911 SCBA backs for use with ALS provision. Includes recess for SCBA brackets in wall.	$2,979
1510-0238	Bostrom SCBA seats with integral seat belt forward facing center of rear wall (PR). Free standing mounted on a common seat riser.	$2,130
1510-0240	Driver, officer and rear bench seat riser constructed of diamond plated IPOS (as equipped). Includes diamond plate overlay for rear facing seats.	$320
1510-0241	Driver and officer's seat riser constructed of diamond plated IPOS (as equipped).	$116
1510-0243	Two (2) Bostrom SCBA seat backs and a three (3) person bench (no center position).	$2,069
1510-0244	Driver seat Bostrom electric with SCBA back with integral seat belt.	$1,928
1510-0248	Seats Inc 911 SCBA seat forward facing rear wall center. For use with extended cab with side access ALS compartments. Includes pass-thru and rear heater provision (if equipped).	$1,045
1510-0249	Two man bench centered on rear wall with Bostrom SCBA backs for use with ALS provision with side access only or interior side compartments. Includes provision for rear heaters mounted below bench.	$2,023
1510-0252	Location modification of electric seat controls. The controls shall be relocated to the outboard side of the seat as mounted IPO standard location.	$206
1510-0253	Bostrom SecureAll mechanical air pack bottle bracket (EA). SecureAll factory adjusted to accommodate carbon fiber bottle(s) in mounted location(s) as specified. Location: [#LOC].	$517
1510-0254	Bostrom SecureAll mechanical air pack bottle bracket (EA) for bench / fold-down seat. SecureAll factory adjusted to accommodate carbon fiber bottle(s) in mounted location(s) as specified. Location: [#LOC].	$634
1510-0256	Two man bench centered on rear wall Non-SCBA seat backs. (1) Access door on each side/end of riser to store (1) SCBA bottle on each side of riser.	$1,574
1510-0257	Rear facing and forward facng rear cab risers to be extended 2" in height. Vista cabs only.	$455
1510-0258	Zico EZ-LOC mechanical air pack bottle bracket (EA). Model QM-EZL with adjustable top clamp and footplate with center pull release for Bostrom seat. Location: [#LOC].	$572
1510-0259	Driver and officer outboard rear facing seats mounted at 15 degree inboard angle.	$473
1510-0260	Cargo net covers for sides of seat riser IPOS.	$162
1510-0261	911 Attendant seat (PR) on common riser. Locate centered on rear wall.	$2,184
1510-0263	Two man bench centered on rear wall with 911 SCBA backs. Includes square corners.	$1,298
1510-0264	Two man bench centered on rear wall with Bostrom SCBA. Includes square corners.	$1,600
1510-0265	Department patch sewn on 911 seat (EA). Requires customer supplied department patch for each seat.	$103
1510-0267	Two man bench centered on rear wall with Bostrom SCBA backs includes squared corners and separate seat bottoms spaced 6" from each other.	$1,714
1510-0268	Rear facing seat center rear engine cover Bostrom flip-up with SCBA back and integral seat belt.	$1,138
1510-0270	Seatbelt P-clips. Provide on all connector ends of seatbelts.	$184

1510-0272	Driver seat to be Bostrom fixed SCBA. Includes fore and aft adjustment.	$1,068
1510-0273	Four man bench centered on rear wall with (2) Bostrom SCBA inboard and attendant backs outboard.	$2,613
1510-0274	Two man bench centered on rear wall with 911 SCBA backs for use with exterior side access only or interior side compartments. Includes provision for rear heaters mounted below bench.	$2,293
1510-0275	Arm rest installed on the outboard side of the seat. Location: [#LOC].	$246
1510-0276	Face mask storage pouch for Bostom Tanker series SCBA seats (EA).	$87
1510-0277	Driver outboard rear facing seat mounted at 10 degree inboard angle.	$237
1510-0278	Two man bench centered on rear wall with bench style back cushion with 2" extra depth removable bottom cushion with cut-out under cushion and angle corners for use with ALS provision with side access only.	$2,501
1510-0279	ReadyReach seat belt extender. Location: [#LOC].	$81
1510-0280	Rear facing seat driver side rear engine cover Bostrom with SCBA back and integral seat belt.	$900
1510-0281	Driver seat 911Battalion air ride ABTS.	$2,150
1510-0282	Officer seat 911 Battalion ABTS air ride SCBA.	$1,919
1510-0283	Officer seat to be 911Battalion ABTS fixed SCBA.	$1,000
1510-0284	Rear facing 911 Battalion ABTS seat with SCBA driver's side.	$1,000
1510-0285	Rear facing 911 Battalion ABTS seat with SCBA officer's side.	$1,000
1510-0286	Two man bench centered on rear wall with 911 Battalion ABTS SCBA backs. Includes angled corners.	$2,018
1510-0287	Two man bench centered on rear wall with 911 Battalion ABTS SCBA backs. Includes square corners.	$2,018
1510-0288	Flip-up 911 Battalion ABTS SCBA seat located [#LOC].	$1,142
1510-0289	Fold down seat with 911 Battalion ABTS SCBA back located [#LOC].	$1,051
1510-0290	Rear facing 911 Battalion ABTS seat with SCBA on engine cover.	$1,000
1510-0316	Two man SCBA bench seat riser only with angled corners. No SCBA backs or bottom cushion. For lower storage only.	$1,117
1510-0317	Zico EZ-LOC mechanical air pack bottle bracket (EA). Model QM-EZL-CPR with adjustable top clamp and adjustable footplate with center pull release for 911 seats. Location: [#LOC].	$646
1510-0318	Rear facing Bostrom seat fixed attendant officer's side.	$620
1510-0319	(2) Flip up Bostrom SCBA seats with common riser located center on rear wall.	$2,364
1510-0320	Rear facing USSC Valor ABTS seat with SCBA driver's side. Includes fore and aft slides.	$1,322
1510-0321	Rear facing USSC Valor ABTS seat with SCBA officer's side. Includes fore and aft slides.	$1,322
1510-0322	Flip-up USSC Valor ABTS SCBA seat (PR) forward facing center of rear wall mounted on a common seat riser.	$3,005
1515-0012	Paint air conditioning condenser job color.	$775
1515-0017	Air conditioning for the Typhoon X, CII X and Quest with Cummins ISC/ISL engine and radiator mounted condenser.	$6,443
1515-0018	Air conditioning for the Typhoon X, CII X and Quest with roof top mounted condenser.	$7,525
1515-0019	Air Conditioning lines and fittings wrapped	$406
1515-0020	Well nut fasteners to attach A/C filter to overhead panel	$235
1515-0023	A/C Cutoff Switch. Install switch in cab dash to turn off A/C in rear crew area.	$59
1515-0029	Air conditioning for the TyphoonX, CII X and Quest with Cummins ISC or ISL, roof top mounted condensor.	$7,525
1515-0031	Roof mtd A/C system Penguin 13,500 BTU. Locate on cab roof wired to shore power. Includes auto transfer switch.	$3,434
1515-0034	Roof mtd A/C system Coleman 13,500 BTU. Locate on rear cab roof wired to shore power and (if equipped w/auto transfer) generator.	$1,912
1515-0035	Stainless steel pan for cab roof mounted A/C unit. Includes drain line to rear of cab. Drain not to drip on drivelines.	$624
1515-0038	Air hose routed from the compressor to the dryer shall be upgraded to include stainless steel mesh for the full length of hose.	$77
1515-0040	Heating and air conditioning cab controls shall be located in the lower center dash panel between driver and officer.	$474
1515-0043	Roof mtd A/C system Penguin 13,500 BTU. Locate on driver side rear cab vista roof wired to shoreline.	$3,434
1515-0044	Roof mtd A/C system Penguin 13,500 BTU. Locate on officer side rear cab vista roof wired to generator.	$3,434
1515-0046	Locate roof mounted AC condenser on [#LOC].	$542
1515-0056	Roof mtd A/C system Coleman Mach 8 15,000 BTU. Locate on rear cab roof wired to shore power and (if equipped w/auto transfer) generator.	$3,053
1520-0000	Cyclone II medium cab 58" CA	$54,152
1520-0001	Cyclone II long cab 67.5" CA	$59,824
1520-0002	Cyclone II extended cab 80" CA	$60,442
1520-0003	Typhoon long cab 67.5" CA	$36,389
1520-0004	Typhoon Medium cab 58" CA	$33,923
1520-0005	Cyclone II medium cab three door with rear door on officer's side.	$54,152
1520-0006	Cyclone II long cab three door with rear door on officer's side.	$59,824
1520-0008	Cyclone II X medium cab with 58" CA	$52,211
1520-0009	Cyclone II X short cab with 44.5" CA	$55,922
1520-0010	Cyclone II X long cab with 67.5" CA	$57,885
1520-0011	Cyclone II X extended cab with 80" CA	$58,502
1520-0012	Typhoon X long cab with 67.5" CA	$34,447
1520-0013	Typhoon X medium cab with 58" CA	$31,983

1520-0014	Cyclone II X medium cab with 58" CA. Includes barrier style doors. Orange County, California. Includes mounting on engine cover of customer supplied computer bracket (see engineering), cut-out in driver side overhead for customer supplied radio.	$59,445
1520-0015	Cyclone II X medium cab with ALS provision and 80" CA. Includes exterior hinged ALS doors approx 73" high.	$59,927
1520-0017	Quest long cab with 68" CA	$57,885
1520-0018	Quest medium cab with 58" CA	$52,211
1520-0019	Cyclone II X medium cab with ALS provision, barrier style doors and 80" CA. Includes exterior hinged ALS doors approx 73" high.	$60,681
1520-0020	Quest medium cab with 58" CA and barrier style doors.	$52,966
1520-0021	Typhoon X long cab with 67.5" CA. Includes barrier style doors.	$35,205
1520-0022	Cyclone II X medium cab with 58" CA. Includes barrier style doors.	$52,966
1520-0023	Cyclone II X long cab with 67.5" CA. Includes barrier style doors.	$58,642
1520-0024	Cyclone II X extended cab with 80" CA. Includes barrier style doors.	$59,256
1520-0025	Typhoon X medium cab with 58" CA. Includes barrier style doors.	$32,749
1520-0026	Quest long cab with 68" CA and barrier style doors.	$58,642
1520-0027	Quest extended cab with 80" CA.	$58,502
1520-0029	Typhoon X short cab with 44.5" CA	$35,693
1520-0030	Cyclone II X Hush/Mid-Engine long cab with 67.5" C/A	$56,853
1520-0031	Cyclone II X Hush/Mid-Engine medium cab with 58" C/A.	$51,180
1520-0032	Cyclone II X Hush/Mid-Engine medium cab with 58" C/A. Includes barrier style doors.	$51,923
1520-0033	Cyclone II X Hush/Mid-Engine long cab with 67.5" C/A. Includes barrier style doors.	$57,610
1520-0081	Cyclone II X short cab with 44.5" CA and right hand drive.	$70,101
1520-0087	Cyclone II X short cab 2 door with 44.5" ca. Includes transverse compartment at rear of cab above the front axle accessible from both sides. The compartment is approx 48.5" wide x 44.25" high x the width of the cab.	$55,922
1520-0090	Cyclone II X (3) door extended cab with 80" CA. Officer side rear door.	$58,502
1520-0096	Typhoon X extended cab with 80" CA	$38,273
1520-0097	Typhoon X extended cab with 80" CA. Includes barrier style doors.	$39,031
1520-0098	Quest (3) door extended cab with 80" CA and barrier style doors. Officer side rear door.	$59,153
1520-0104	Cyclone II X (3) door extended cab with 80" CA. Includes barrier style doors. Locate rear door on Officer side of cab.	$60,440
1520-0107	Quest long cab with 68" CA. (QST2)	$69,616
1520-0108	Quest extended cab with 80" CA. (QST2)	$70,233
1520-0109	Quest medium cab with 58" CA and barrier style doors. (QST2)	$64,697
1520-0114	Typhoon X medium cab with ALS provision, barrier style doors and 80" CA. Includes exterior hinged ALS doors approx 73" high.	$40,454
1520-0115	Quest medium cab with ALS provision and 80" CA (QST2). Includes exterior hinged ALS doors approx 73" high.	$71,658
1520-0122	Typhoon X medium cab with ALS provision and 80" CA. Includes exterior hinged ALS doors approx 73" high.	$39,700
1535-0002	Driver side cab wheel well medical cabinet approximately 42 x 22 (25 Quest) x 28. Includes external locking roll-up door and interior hinged door with locking push-button latch. Cabinet includes (2) adjustable shelves.	$1,988
1535-0003	Officer side cab wheel well medical cabinet approximately 42 x 22 (25 Quest) x 28. Includes external locking roll-up door and interior hinged door with locking push-button latch. Cabinet includes (2) adjustable shelves.	$1,988
1535-0004	Medical cabinet mounted on rear wall of cab 48 x 32 x 24 with a locking roll up door. Lower door opening raised to provide hand clearance.	$4,121
1535-0005	Medical cabinet mounted on rear wall of cab 48 x 40 x 20 with locking roll up door. Lower door opening raised to provide hand clearance.	$3,875
1535-0006	Medical cabinet mounted on rear wall of cab 55X32X19 with a locking roll up door. Lower door opening raised to provide hand clearance.	$2,642
1535-0007	Medical cabinet mounted on rear wall of cab 55 x 40 x 20 with a locking roll up door. Lower door opening raised to provide hand clearance.	$3,295
1535-0012	Medical cabinet mounted on the wheel well driver side of cab 45H x 21W x 24D with a locking roll-up door.	$2,473
1535-0013	Medical cabinet mounted on the wheel well officer side of cab 45H x 21W x 24D with a locking roll-up door.	$2,473
1535-0028	Cab medical storage cabinet(s) finish to be swirled with clear coating.	$1,178
1535-0030	All roll-up medical cabinet doors selected on the cab to be ROM brand.	$130
1535-0031	All medical cabinet RUD in the cab to be locking with J236 key	$134
1535-0032	All medical cabinet RUD in the cab to be locking with 1250 key	$134
1535-0034	All exterior access RUD for medical cabinets to be painted job color. Not available on two tone cabs.	$247
1535-0035	Engine compartment light, LED (EA).	$232
1535-0037	Rear cab wall medical cabinet with side access doors (one each side). Cabinet to be 50" high x 38" wide x 24" deep. Includes (2) locking roll-up doors (satin finish) and (3) adjustable shelves. Lower door openings raised to provide hand clearance.	$3,001
1535-0038	Interior medical cabinet. Locate to rear of engine cover. Cabinet to be 30" high x 38" wide x 20" deep with a locking roll up door. Includes (1) adjustable shelf.	$3,076
1535-0043	Medical cabinet mounted on rear wall of cab 48X32X24 with a locking roll up door and windows in door slats. Lower door opening raised to provide hand clearance.	$4,412

1535-0045	ALS interior - Style "A". Includes forward wall with center locking roll-up door for access from int, small compts up high ea side of ctr opening with glove box latch on driver's side compt and Medco keyed lock on officer's side, strikers high and low on ALS doors, access plts on int panel of ALS doors, approx 5"W x 17"H x 70"L backboard sleeve, two adj shelves ahead of backboard sleeve and a roll-out tray with 36" slides each side on floor.	$8,598
1535-0046	Medical cabinet mounted on rear wall of cab 60X40X23 with a locking roll up door. Lower door opening raised 12" to provide area for rear heaters. Includes lower ventilation, front access and removable sub-floor for additional access.	$3,126
1535-0047	Medical cabinet mounted on the officer side rear cab wall 55(54 non-vista)X18X12 with a locking roll up door. Lower door opening raised to provide hand clearance.	$2,492
1535-0048	Medical cabinet mounted on the driver side rear cab wall 55(54 non-vista)X18X12 with a locking roll up door. Lower door opening raised to provide hand clearance.	$2,492
1535-0049	Louvers for interior medical/ ALS cabinet wall(s) to help cabinet contents to maintain cab interior temperatures. The louvers to be in four sets of three, located two high and two low. Location: [#LOC].	$173
1535-0050	Medical cabinet on rear wall of cab. Reference 131288 #1-H-0468 and 1-H-07A.	$4,121
1535-0051	Compartment rear side of cab "under riser" type. Approx 22W x 30H opening. Includes double pan hinged door and pass through to bench if equipped. Location: driver and officer side.	$1,142
1535-0052	Medical cabinet mounted on rear wall of cab 52" x 40" x 23" with a locking roll up door. Lower door opening raised 4" to provide area for radio installation. Includes lower ventilation and removable sub-floor for additional access.	$3,126
1535-0053	ALS interior - Style 'B". Includes forward wall with center locking roll-up door for access from int, compts up high ea side of ctr opening with glove box latch on driver's side compt and Medco keyed lock on officer's side, strikers high and low on ALS doors, access plts on int panel of ALS doors, approx 5"W x 17"H x 70"L backboard sleeve, two adj shelves ahead of backboard sleeve and a roll-out tray with 36" slides each side on floor.	$8,831
1535-0054	Exterior access roll up doors for medical cabinets to be painted upper cab color.	$247
1535-0057	Driver side cab wheel well medical cabinet approximately 42 x 22 (25 Quest) x 28. Includes external locking pan door painted job color and interior hinged full height door with locking push-button latch. Cabinet includes (2) adjustable shelves.	$2,385
1535-0058	Medical cabinet mounted on rear wall of cab 48X42X20 with angled corners and locking roll up door. Lower door opening raised to provide hand clearance.	$3,875
1535-0059	Brace .75 x 2.75 below medical cabinet shelf	$86
1535-0060	Rear cab wall medical cabinet with side access doors (one each side). Cabinet to be 62" high x 38" wide x 24" deep. Includes (2) locking roll-up doors (satin finish) and (3) adjustable shelves. Lower door openings raised to provide hand clearance.	$3,234
1535-0061	Driver side cab wheel well medical cabinet approximately 42x22(25 Quest)x28. Includes external locking pan door painted job color and interior locking roll-up door with satin finish. Cabinet includes (2) adjustable shelves.	$2,617
1535-0062	Interior medical cabinet. Locate to rear of engine cover. Cabinet to be 30" high x 38" wide x 20" deep with a locking roll up door. Includes (1) adjustable shelf and forward facing drop down door.	$3,165
1535-0063	Officer side cab wheel well medical cabinet approximately 42x22(25 Quest)x28. Includes external locking single door painted job color and interior hinged door with locking push-button latch. Cabinet includes (2) adjustable shelves.	$2,385
1535-0064	Rear cab wall medical cabinet with side access doors (one each side). Cabinet to be 48" high x 38" wide x 24" deep. Includes (2) locking roll-up doors (satin finish) and (3) adjustable shelves. Lower door openings raised to provide hand clearance.	$3,001
1535-0066	Interior medical cabinet. Locate to lower rear of engine cover. Cabinet to be 32" high x 30" wide x 24" deep with single pan double bi-fold doors. Includes (1) vertical and (1) horizontal partition centered in the cabinet, louvered lower side walls and removable lower rear facing panel for installation of heaters.	$3,107
1535-0067	ALS - Side access. Includes compts on each side of cab, access up high each side of interior outboard with glove box latches, strikers high and low on ALS doors (CIIX/TyphoonX only), access plts on int panel of ALS doors (CIIX/TyphoonX only), extended cab floor and three adj shelves.	$3,430
1535-0068	Rear wall medical cabinets. Includes forward wall and (2) full height, equal width locking roll-up door compts with (3) shelves in each compt.	$9,401
1535-0069	Rear cab wall medical cabinet with side access doors (one each side). Cabinet to be 50" high x 30" wide x 24" deep. Includes (2) locking roll-up doors (satin finish) and (3) adjustable shelves. Lower door openings raised to provide hand clearance.	$3,001
1535-0070	Riser for medical cabinet. Lifts bottom of cabinet up to top of rear wall seat support. Front of riser to be closed, sides to be open. CII X / Typhoon X only.	$690
1535-0071	ALS interior - Style "A". Includes forward wall with center locking roll-up door for access from int, small compts up high ea side of ctr opening with glove box latch on driver's side compt and Medco keyed lock on officer's side, strikers high and low on ALS doors, access plts on int panel of ALS doors, approx 5"W x 17"H x 70"L backboard sleeve, two adj shelves ahead of backboard sleeve and a roll-out tray with 36" slides each side on floor. HCFD.	$18,639
1535-0072	Rear cab wall medical cabinet with side diamond plate access doors (one each side) mounted above support channel on back wall. Cabinet to be 38" high x 47.25" wide x 14" deep. Includes diamond plate doors hinged to the rear with d-ring latches and (2) adjustable shelves.	$3,001
1535-0073	Officer side cab wheel well medical cabinet approximately 42 x 22 (25 Quest) x 28. Includes external locking pan door painted job color and interior hinged full height door with locking push-button latch. Cabinet includes (2) adjustable shelves.	$2,385
1535-0074	All medical cabinet RUD in the cab to be locking with CH751 key.	$134

1535-0075	Driver side cab wheel well medical cabinet approximately 42x22(25 Quest)x28. Includes external locking roll-up door and interior hinged door with locking push-button latch. Cabinet includes (1) adjustable partition installed and (2) adjustable shelves shipped loose in the cabinet.	$2,099
1535-0076	Driver side cab wheel well medical cabinet approximately 42x22(25 Quest)x28. Includes external pan door with locking Tri-Mark latch painted job color and interior full height hinged door with locking push-button latch. Cabinet includes (2) adjustable shelves.	$2,537
1535-0077	Officer side cab wheel well medical cabinet approximately 42x22(25 Quest)x28. Includes external pan door with locking Tri-Mark latch painted job color and interior full height hinged door with locking push-button latch. Cabinet includes (2) adjustable shelves.	$2,537
1535-0078	Interior medical cabinet. Locate to rear of engine cover. Cabinet to be 25.5" high x 30" wide x 23" deep with (2) drop down doors.	$1,026
1535-0079	All roll-up medical cabinet doors selected on the cab to be Amdor brand.	$130
1535-0080	Officer side cab wheel well medical cabinet approximately 42x22(25 Quest)x28. Includes external locking roll-up door. Cabinet includes (2) adjustable shelves.	$1,778
1535-0081	Driver side cab wheel well medical cabinet approximately 42x22(25 Quest)x28. Includes external locking roll-up door. Cabinet includes (2) adjustable shelves.	$1,778
1535-0083	Cabinet officer side behind officer seat with a Norcold DE-0740 refrigerator. Cabinet to include a garage style roll-up door (no lighting but wired to door ajar indicator). Wire refrigerator to operate thru shore line and during transit and on scene.	$3,673
1535-0084	Full width cabinet along upper forward vista area of cab. To include two drop down doors with push-button latching. Two LED lights to be mounted in the upper area of the cabinet. Each door to wired to door adjar indicator. Final design to be discussed with customer	$3,410
1535-0085	Rear cab wall medical cabinet with side access doors (one each side). Cabinet to be 36" high x 38" wide x 24" deep. Includes (2) roll-up doors (satin finish) and (2) adjustable shelves. Lower door openings raised to provide hand clearance.	$3,001
1535-0086	Driver and officer side cab wheel well medical cabinet approximately 17x23x28. Includes internal locking vertically hinged door. Quest cabs only.	$1,338
1535-0087	Special medical cabinet on rear wall. Includes lower area ROM door with satin finish (front lower area raised 6")and lock, (1) fixed shelf and (2) adjustable (above)-All with 1" lips all the way around, upper area with drop down down with (2) non-locking push buttons, lower sides open with cargo nets, upper side officer with vertically hinged door with Medeco3 cam lock with (2) alike keys (each unit to be keyed differently). See full design in file.	$8,374
1535-0088	Riser for medical cabinet. Approx 40"W x 20"D x 17"H. Front of riser to have a drop down door with two locking latches. Finish to match medical cabinet.	$898
1535-0089	Full width cabinet along upper rearward vista area of cab. To include three (3) lift-up doors with push-button latching (hold-opens for each as size of door permits). Each opening to include one (1) ROM LED strip light mounted in the upper area of the cabinet. Each door to wired to door ajar indicator.	$3,410
1535-0091	Officer side cab wheel well medical/communication cabinet approximately 42x22(25 Quest)x28. Includes external half height locking pan door with Tri-Mark latch painted job color and interior full height opening with cargo netting. Cabinet includes (3) adjustable interior pull-out shelves.	$3,137
1535-0092	Driver side cab wheel well medical/communication cabinet approximately 42x22(25 Quest)x28. Includes external half height locking pan door with Tri-Mark latch painted job color and interior full height opening with cargo netting. Cabinet includes (3) adjustable interior (4) sided trays with 1" lips.	$3,137
1535-0093	Compartment rear side of cab "under riser" type. Approx 22W x 30H opening. Includes double pan hinged door with Tri-Mark locking latches and pass through to bench if equipped. Location: driver and officer side.	$1,294
1535-0094	Driver side cab wheel well medical cabinet approximately 42x22(25 Quest)x28. Includes external pan door with locking Tri-Mark latch painted job color and interior full height opening with cargo net cover. Cabinet includes (2) adjustable shelves.	$2,695
1535-0095	Officer side cab wheel well medical cabinet approximately 42x22(25 Quest)x28. Includes external pan door with locking Tri-Mark latch painted job color and interior full height opening with cargo net cover. Cabinet includes (2) adjustable shelves.	$2,695
1535-0096	Exterior access roll up door for medical cabinet to be painted two-tone to match cab paint break (EA).	$420
1535-0097	Medical cabinet mounted on the wheel well officer side of cab 15.5X24X21 with a vertically hinged door and locking push-button latch.	$986
1535-0098	Upper forward vista area cabinet. Cabinet to be full width and height of vista area forward of rear cab doors. Includes (3) horizontal hinged lift-up doors. Outboard compartments to be approx. 12" wide.	$2,921
1535-0099	Upper rearward vista area cabinet. Cabinet to be full width and height of vista area rearward of rear cab doors. Includes (3) horizontally hinged lift-up doors. Outboard compartments to be approx. 12" wide.	$2,921
1535-0100	Medical cabinet mounted on the driver side rear cab wall 55X28X12 with a locking roll up door. Lower door opening raised 12" to provide space for rear heater. Includes lower ventilation, front access and removable sub-floor for additional access.	$2,818
1535-0101	Medical cabinet mounted on the officer side rear cab wall 55X28X12 with a locking roll up door. Lower door opening raised 12" to provide space for rear heater. Includes lower ventilation, front access and removable sub-floor for additional access.	$2,818
1535-0102	Medical cabinet - ALS style side access. Includes compt on officer side of cab, access up high on interior with glove box latch, extended cab floor and three adj shelves. Includes pass-thru under bench seat riser if equipped.	$2,430

1535-0103	Compartment rear side of cab "under riser" type. Approx 22W x 30H opening. Includes double pan hinged door and pass through to bench if equipped. Location: driver side.	$1,142
1535-0104	Medical cabinet mounted on the driver side rear cab wall with a locking roll up door. Cabinet to be approx 53H x 18W x 12D. Bottom of exterior opening just above rear seat channel. Includes 2 adj shelves in upper area, false floor at top of seat channel and interior door below false floor. Interior door to be vert hinged on inboard side.	$3,541
1535-0105	Medical cabinet mounted on the officer side rear cab wall 55(54 non-vista)X18X12 with a locking roll up door. Lower door opening raised approx. 12" to provide space for rear wall heaters. Includes slots and false floor.	$2,492
1535-0106	Medical cabinet mounted on the driver side rear cab wall 55(54 non-vista)X18X12 with a locking roll up door. Lower door opening raised approx. 12" to provide space for rear wall heaters. Includes slots and false floor.	$2,492
1535-0109	Compartment rear side of cab below floor. Approx 22W x 19.5H opening. Includes double pan hinged door with Tri-Mark latch. Location: driver and officer side.	$1,294
1535-0110	Medical cabinet mounted on the driver side rear cab wall 55(54 non-vista)X20X22 with a locking satin finish roll-up door and (3) adjustable shelves.	$2,608
1535-0111	Medical cabinet mounted on the officer side rear cab wall 55(54 non-vista)X20X22 with a locking satin finish roll-up door and equipment rack.	$2,608
1535-0112	Officer side cab wheel well medical cabinet approximately 42x22(25 Quest)x28. Includes external locking pan door painted job color and interior locking roll-up door with satin finish. Cabinet includes (2) adjustable shelves.	$2,617
1535-0114	Medical cabinet mounted on the wheel well driver side of cab 44HX21WX16D with a locking roll up door.	$2,400
1535-0115	Special medical cabinet on rear wall. Includes lower side access only with (2) adjustable shelves with 1" lips all the way around, (1) fixed shelf with 1" lips all the way around, upper front area with drop down door with (2) non-locking push buttons, lower sides open with cargo nets attached with clips in lieu of snaps, upper side officer with vertically hinged door with Medeco3 cam lock with (2) alike keys (each unit to be keyed differently). See full design in file.	$7,849
1535-0116	Equipment bag storage rack; finish to match cab interior. Location: officer side rear wall medical cabinet.	$241
1535-0117	Medical cabinet(s) interior finish and components (shelves/trays) to match interior cab finish.	$241
1535-0118	Medical cabinet mounted on rear wall of cab 50X38X12 with locking roll up door. Lower door opening raised to provide hand clearance.	$3,797
1535-0119	Medical cabinet mounted on rear wall of cab 55X40X23 with a locking roll up door. Cabinet floor to be level with top of PTO box on cab floor.	$3,126
1535-0120	Medical cabinet mounted on the officer side rear cab wall full height (as applicable)X 18W X 12D with a locking roll up door. For use with vista cabs only. Lower door opening raised to provide hand clearance.	$2,597
1535-0121	Medical cabinet mounted on rear wall of cab full height (as applicable)X55X22 with locking roll up door. For use with vista cabs only. Lower door opening raised to provide hand clearance.	$4,190
1535-0122	Medical cabinet mounted on the driver side rear cab wall full height (as applicable)X 18W X 12D with a locking roll up door. For use with vista cabs only. Lower door opening raised to provide hand clearance.	$2,597
1535-0123	Full width cabinet along upper forward vista area of cab. To include three (3) lift-up doors with push-button latching (hold-opens for each as size of door permits). Each opening to include one (1) ROM LED strip light mounted in the upper area of the cabinet. Each door to wired to door ajar indicator.	$3,410
1535-0124	Medical cabinet mounted on the driver side rear cab wall 55(54 non-vista)X20X22 with a locking satin finish roll-up door and (3) adjustable shelves. Includes lower area raised to accomodate rear wall heater.	$2,609
1535-0125	Medical cabinet mounted on the officer side rear cab wall 55(54 non-vista)X20X22 with a locking satin finish roll-up door, (1) adjustable shelvf and equipment rack. Includes lower area raised to accomodate rear wall heater.	$2,609
1535-0126	Medical cabinet mounted on the wheel well driver side of cab 32H x 21W x 24D with a interior hinged full height door with locking push-button latch; hinged inboard.	$2,106
1535-0127	Louvers for rear wall bench seat riser to help cabinet contents to maintain cab interior temperatures. The louvers to be in three sets of three, located low on forward wall.	$173
1535-0128	ALS - Side access. Includes compts on each side of cab, 16Wx20H access up high each side of interior outboard with locking glove box latches, strikers high and low on ALS doors, access plts on int panel of ALS doors, extended cab floors, smooth plate rear kick plates, one adj shelf and nylatron floor overlay. Includes pass-thru under bench seat if equipped.	$3,430
1535-0129	Reverse hinge driver and officer side ALS compartment door. Includes vertically mounted drip rail along forward area of compartment opening (in addition to the horizontal drip rail above the door opening; CIIX and TyphoonX cabs only). Doors to open approx. 110 degrees.	$149
1535-0130	Driver side cab wheel well medical cabinet approximately 42 x 22 (25 Quest) x 28. Includes external locking roll-up door and interior hinged door with locking push-button latch; hinged outboard. Cabinet includes (2) adjustable shelves.	$1,988
1535-0131	Driver side cab wheel well medical cabinet approximately 42 x 24 (27 Quest) x 28. Includes external locking roll-up door and interior hinged door with locking push-button latch. Cabinet includes (2) adjustable shelves.	$1,988
1535-0132	Officer side cab wheel well medical cabinet approximately 42 x 24 (27 Quest) x 28. Includes external locking roll-up door and interior hinged door with locking push-button latch. Cabinet includes (2) adjustable shelves.	$1,988
1535-0133	Cab medical/storage cabinet(s) interior finish to be Zolatone gray.	$355

1535-0134	All roll-up medical cabinet doors selected on the cab to be Gortite brand.	$227
1535-0135	Driver side cab wheel well medical cabinet approximately 42 x 22 (25 Quest) x 28. Includes external locking roll-up door and interior hinged smoked lexan door with locking push-button latch. Cabinet includes (2) adjustable shelves.	$2,041
1535-0136	Rear cab wall medical cabinet with front and side access doors (one each side). Cabinet to be 42" high x 30" wide x 32" deep (do not notch for support bracket; customer to store backboard(s) above support channel behind cabinet; install mounting bracket above cabinet). Includes (1) locking lower horizontally hinged plate door on front located below roll-up door drums, (2) locking side roll-up doors (satin finish) and (2) adjustable shelves. Lower door openings raised to provide hand clearance.	$3,316
1535-0137	Medical cabinet mounted on the wheel well driver side of cab 45H x 21W x 24D with a locking roll-back (bread box) door.	$2,473
1535-0138	Lock box mounted in the driver side wheel well medical cabinet floor. 14X21X20 with a locking horizontally hinged door. Finish will match interior of cab.	$583
1535-0139	ALS interior with backboard and stokes basket storage. Includes forward wall with (2) outboard locking roll-up doors for access from int, (3) compts up high with glove box latches, strikers high and low on ALS doors, access plts on int panel of ALS doors, (2) approx 5"W x 17"H x 70"L backboard sleeves and stokes basket storage below backboard sleeves on floor.	$9,332
1535-0140	Medical cabinet mounted on the officer side rear cab wall 55(54 non-vista)X18X12 with a locking full height door hinged inboard.	$2,282
1535-0141	Medical cabinet mounted on the driver side rear cab wall 55(54 non-vista)X18X12 with a locking full height door hinged inboard.	$2,282
1535-0143	Lock box mounted on top of the rear wall medical cabinet. 14HX18WX12D with a locking horizontally hinged drop down door. Finish will match interior of cab.	$583
1535-0145	ALS - Side access. Includes compts on each side of cab, strikers high and low on exterior doors, access plts on int panel of exterior doors, full height satin finish Amdor roll-up doors on interior, extended cab floor and three adj shelves.	$5,031
1535-0146	Upper rearward vista area cabinet. Cabinet to be between full height exterior ALS style cabinets and the same height of vista area. Includes (1) horizontally hinged lift-up door.	$1,961
1535-0147	Officer side cab wheel well medical/communication cabinet approximately 42x22(25 Quest)x28. Includes external half height locking pan door with Tri-Mark latch painted job color and interior full height opening with cargo netting. Cabinet includes (1) adjustable shelf.	$2,986
1535-0148	All medical cabinet RUD in the cab to be locking with GEM key lock	$134
1535-0149	Officer side cab wheel well medical cabinet approximately 42x24x28. Includes external locking pan door painted job color and raised boxed interior locking roll-up door with satin finish for a 42" opening. Cabinet includes (2) adjustable shelves. Requires vista cab roof and removal of side windows.	$2,823
1535-0150	Medical cabinet mounted on the wheel well officer side of cab 45H x 21W x 24D with a interior hinged full height door with locking push-button latch; hinged inboard.	$2,106
1535-0151	Upper forward center vista area cabinet. Cabinet to be 40W x Vista Height x taper with vista deep. Includes horizontally hinged lift-up door.	$893
1535-0153	Medical cabinet mounted on rear wall of cab 48 x 36 x 20 with a locking roll-back (bread box) door.	$3,875
1535-0154	Medical cabinet mounted on the wheel well driver side of cab 45H x 21W x 24D with a interior hinged full height door with locking push-button latch; hinged inboard.	$2,106
1535-0155	Medical cabinet mounted on the wheel well driver side of cab 45H x 21W x 24D with a locking roll-up door and (2) adjustable shelves.	$2,473
1535-0156	Medical cabinet rear engine cover, bolted to forward facing map box approximately 34Wx25Hx18D. To include one (1) adjustable shelf. Two (2) vertically hinged swing out doors shall allow access (to the rear), the doors shall be raised 6" up from the cabinet's base. The cabinet shall include push-button latching, (2) each door (1) top and (1) bottom.	$1,383
1535-0157	ALS - Side access. Includes compts on each side of cab, strikers high and low on exterior doors, access plts on int panel of exterior doors, satin finish ROM roll-up doors on interior (bottom raised to riser height), extended cab floor and three adj shelves	$5,237
1535-0158	Locking interior medical cabinet plate door (PR). Key type to be 1250.	$149
1535-0159	Medical cabinet mounted on the wheel well officer side of cab 22X21X28 with a vertically hinged door and locking push-button latch.	$986
1535-0160	ALS - Side interior cabinets. Includes full height access doors (raised for heaters if equipped) each side of interior outboard with glove box latches and three adj shelves.	$3,430
1535-0161	Compartment rear side of cab "under riser" type. Approx 22W x 30H opening. Includes double pan hinged door. For use with heaters below bench seat (No pass-through). Location: driver and officer side.	$1,142
1535-0162	Officer side cab wheel well medical cabinet approximately 42 x 24 (25 Quest) x 28. Includes external locking roll-up door and interior cargo net access. Cabinet includes (2) adjustable shelves.	$2,040
1535-0163	Driver side cab wheel well medical cabinet approximately 42 x 24 (25 Quest) x 28. Includes external locking roll-up door and interior cargo net access. Cabinet includes (2) adjustable shelves.	$2,040
1535-0164	Compartment rear side of cab. Approx 8.75"W x 25"H opening. Includes a 3/16" smooth plate doors painted job color with quarter turn D-ring latch. Cut floor in cab to accommadate the height. Location: driver side.	$871
1535-0165	Compartment rear side of cab. Approx 8.75"W x 25"H opening. Includes a 3/16" smooth plate doors painted job color with quarter turn D-ring latch. Cut floor in cab to accommadate the height. Location: officer side.	$871

1535-0166	The bottom of the medical cabinet(s) within the cab shall have stainless steel trim at the bottom. This kick plate trim shall be 4" in height from the floor and shall be trimmed as required for door opening(s) below 4".	$399
1535-0167	Compartment rear side of cab below floor. Approx 9W x 19.5H opening. Includes double pan hinged doors. Long cab with medium door location only. Location: driver and officer side.	$914
1535-0169	Medical cabinet mounted on rear wall of cab 55X38X16 with a locking roll up door. Lower door opening raised to provide hand clearance.	$3,126
1535-0170	Cab compartment - (1) each side rear of front wheels and below the cab transverse compartment. Approx 18 wide x 10.75 tall. To have an aluminum door with D-Ring (non-locking), slam latch, hinged to the front. Door design must seal the compartment, to secure and protect medical equipment.	$1,294
1535-0171	Medical cab contents mounted on the wheel well of cab (cabinet approximately 31"H X 44"W). There shall be a transverse vertical divider approximately 8" rearward of forward wall, used to store a stokes basket. A second vertical divider approximately 10" rearward of the first divider (approximately 18" from forward wall) shall provide transverse storage. A horizontal divider shall be placed between the1st and 2nd vertical partitions, it shall be placed approximately 10" up from the floor to provide approximately a 10" X 10" transverse storage area for the tripod. Above the tripod storage 2 backboards shall be stored with a vertical divider to separate them in 2 transverse storage areas approximately 5" X 21" each (directly above the tripod storage area.. Rearward of the stokes, tripod and backboard transverse storage area the remaining compartment shall be shall be 1/2 transverse depth (or divided left and right). This rearward most area shall not be transverse.	$1,429
1535-0172	Rear cab wall medical cabinet to be 50" high x 38" wide x 24" deep. Includes (1) forward facing locking roll-up door (satin finish) and (3) adjustable shelves. Lower door openings raised to provide hand clearance.	$3,001
1535-0173	ALS - Side access. Includes compartments on each side of cab, strikers high and low on exterior doors. Includes access plates on interior panel of exterior doors, satin finish ROM roll-up doors on interior (bottom raised to riser height), extended cab floor and three adjustable shelves. Cabinet Includes transverse riser with backboard storage. The interior riser jets/protrudes forward between side wall ALS cabinets to allow heaters (if so equipped) not interfere or impede upon transverse storage/ pass-thru of backboards and other equipment stored under the riser in the transverse storage area.	$5,627
1535-0174	ALS door locks - electric. Electric lock for hinged ALS doors. Wire to same electric lock system as other cab doors.	$921
1535-0175	Medical cabinet mounted on rear wall of cab 49 x 40 x 25.5. Side access lower section with cargo net and notch upper forward access with discrete compartment. Includes drop down door.	$3,361
1535-0176	Medical cabinet mounted on rear wall of cab approximately 48 x 38 x 20 with locking roll up door. Lower door opening raised to provide hand clearance. Required with rear outboard fold down seat(s).	$3,875
1535-0177	Compartment rear side of cab "under riser" type. Approx 9W x 30H opening. Includes double pan hinged door and pass through to bench if equipped. Long cab with medium door location only. Location: driver and officer side.	$914
1535-0178	Compartment rear side of cab below floor. Approx 22W x 21H opening. Includes double pan hinged door. Location: driver and officer side.	$1,142
1535-0181	Upper rearward center vista area cabinet. Cabinet to be 48W x Vista Height x 12D. Includes horizontally hinged lift-up door.	$893
1535-0182	Officer side cab wheel well medical cabinet approximately 42 x 24 (27 Quest) x 28. Includes external locking roll-up door and interior cargo net access. Cabinet includes (2) adjustable shelves.	$2,040
1535-0183	Driver side cab wheel well medical cabinet approximately 42 x 24 (27 Quest) x 28. Includes external locking roll-up door and interior cargo net access. Cabinet includes (2) adjustable shelves.	$2,040
1535-0184	Medical cabinet mounted on rear wall of cab 55 x 38 x 20 with a locking roll up door. Lower door opening raised to provide hand clearance.	$3,295
1535-0185	Two (2) compartments rear side of cab below floor (1) driver and (1) officer. Approx 22W x 19.5H opening. Each includes a double pan hinged door with a Tri-Mark latch.	$2,587
1535-0186	Medical cabinet mounted on rear wall of cab 48 x 40 x 17 with locking roll up door. Lower door opening raised to provide hand clearance.	$3,875
1535-0187	Driver side cab wheel well medical cabinet approximately 42 x 24 (25 Quest) x 28. Includes external locking roll-up door and interior hinged door with locking push-button latch. Cabinet includes (2) adjustable shelves.	$1,988
1535-0188	Officer side cab wheel well medical cabinet approximately 42 x 24 (25 Quest) x 28. Includes external locking roll-up door and interior hinged door with locking push-button latch. Cabinet includes (2) adjustable shelves.	$1,988
1535-0190	All shelves within the medical cabinet(s) shall have the a full perimeter lip IPOS.	$61
1535-0191	All exterior access RUD for medical cabinets to be painted [#COL].	$247
1535-0192	The interior medical cabinet shall include stainless steel trim on the vertical corner of the cabinet where the hinge is attached. The trim shall run full height of the cabinet on this corner. The trim shall be 1" x 1" to protect and dress off this single corner's edge.	$201
1535-0193	Medical cabinet mounted on the wheel well officer side of cab 15.5X24X21 with rear facing cargo netting.	$986
1535-0194	Driver side cab wheel well medical cabinet approximately 42 x 22 (25 Quest) x 28. Includes external locking roll-up door and interior hinged door with locking push-button latch.	$1,782

1535-0195	Officer side cab wheel well medical cabinet approximately 42 x 22 (25 Quest) x 28. Includes external locking roll-up door and interior hinged door with locking push-button latch.	$1,782
1535-0196	Interior medical cabinet. Locate to rear of engine cover. Cabinet to be 27" high x 38" wide x 20" deep with a locking roll up door. Includes (1) adjustable shelf and forward facing drop down door.	$3,165
1535-0197	Driver side cab wheel well medical cabinet approximately 42x22(25 Quest)x28. Includes external lift-up pan door with locking Tri-Mark latch painted job color, pull strap for door and interior full height opening with cargo net cover. Cabinet includes (2) adjustable shelves.	$3,039
1535-0198	Officer side cab wheel well medical cabinet approximately 42x22(25 Quest)x28. Includes external lift-up pan door with locking Tri-Mark latch painted job color, pull strap for door and interior full height opening with cargo net cover. Cabinet includes (2) adjustable shelves.	$3,039
1535-0199	Officer side cab wheel well medical cabinet approximately 42x22(25 Quest)x28. Includes external locking pan door painted job color and interior cargo net.	$2,542
1535-0200	Driver side cab wheel well medical cabinet approximately 42x22(25 Quest)x28. Includes external locking pan door painted job color and interior cargo net.	$2,542
1535-0205	Medical cabinet centered on the rear wall of the cab to be 74" wide X 62" tall. The center section on the cabinet will be 22" deep X 25" wide. At the outside edges of the 25" wide section of the cabinet will angle back until it is 10" deep at the outer most point on both sides. The cabinet is to be split into 3 separate sections with each section having (2) adjustable shelves and a locking ROM roll-up doors. Lower door opening raised to provide hand clearance.	$7,026
1535-0206	Additional medical cabinet shelf. Location: (2) driver and (2) officer side medical cabinets.	$144
1535-0207	Driver side cab medical cabinet approximately 52Hx48Wx24D. Located rearward of driver side whell well medical cabinet. Includes external hinged double doors with locking d-ring handle and interior cargo netting. Cabinet includes (2) adjustable shelves.	$4,730
1535-0208	Driver side cab wheel well medical cabinet approximately 42x22(25 Quest)x28. Includes external locking pan door painted job color.	$2,123
1535-0209	Upper forward vista area cabinet. Cabinet to be full width and height of vista area forward of rear cab doors. Includes (3) horizontally hinged Lexan lift-up doors. Outboard compartments to be approx. 12" wide.	$3,121
1535-0210	Officer side cab wheel well medical cabinet approximately 42 x 22 (25 Quest) x 28. Includes external locking roll-up door, no interior access. Cabinet includes (2) adjustable shelves.	$1,924
1535-0212	Medical cabinet mounted on the officer side rear cab wall full height (as applicable)X 18W X 12D with a locking roll up door. For use with vista cabs only. Lower door opening raised to provide hand clearance.	$2,597
1535-0213	Medical cabinet mounted on the driver side rear cab wall full height (as applicable)X 18W X 12D with a locking roll up door. For use with vista cabs only. Lower door opening raised to provide hand clearance.	$2,597
1535-0214	Driver side cab wheel well medical cabinet approximately 42 x 22 (25 Quest) x 28. Includes external locking roll-up door (no interior door).	$1,768
1535-0215	Rear cab wall medical cabinet with side access doors (one each side). Cabinet to be 50" high x 38" wide x 24" deep. Includes (2) locking roll-up doors (satin finish) and (2) adjustable shelves. Lower door openings raised to provide hand clearance.	$2,971
1535-0216	Filler panel above medical cabinet, (3) sided with finish to match other medical cabinet(s). This panel shall dress off the gap between the top of the cabinet and the ceiling.	$246
1535-0217	Officer side cab wheel well medical cabinet approximately 42 x 24 (27 Quest) x 28. Includes external locking roll-up door, no interior access. Cabinet includes (2) adjustable shelves.	$1,988
1535-0218	Driver side cab wheel well medical cabinet approximately 42 x 24 (27 Quest) x 28. Includes external locking roll-up door, no interior access. Cabinet includes (2) adjustable shelves.	$1,988
1535-0219	Driver side cab wheel well medical cabinet approximately 42x22(25 Quest)x28. Includes external pan door with locking Tri-Mark latch painted job color and interior locking roll-up door with satin finish. Cabinet includes (2) adjustable shelves.	$2,617
1535-0220	Officer side cab wheel well medical cabinet approximately 42x22(25 Quest)x28. Includes external pan door with locking Tri-Mark latch painted job color and interior locking roll-up door with satin finish. Cabinet includes (2) adjustable shelves.	$2,617
1535-0221	Rear cab wall medical cabinet with side access on each side using black cargo netting. Cabinet to be 45" wide X 16"deep X full height (as applicable). Includes cabinet front access door using a smooth plate vertically hinged double door with thumb latches and (3) adjustable shelves. The cabinet will not be notched around rear wall channel.	$2,932
1535-0222	Driver side cab wheel well medical cabinet approximately 42 x 22 (25 Quest) x 28. Includes external locking pan door painted job color. Cabinet includes (2) adjustable shelves.	$2,385
1535-0223	Officer side cab wheel well medical cabinet approximately 42 x 22 (25 Quest) x 28. Includes external locking pan door painted job color. Cabinet includes (2) adjustable shelves.	$2,385
1535-0224	Lock box mounted in the driver side wheel well medical cabinet floor. 8X21X20 with a locking horizontally hinged door. Finish will match interior of cab.	$583
1535-0225	Special medical cabinet on rear wall. Includes lower side access only with (2) adjustable shelves with 1" lips all the way around, upper front area with drop down door (approx. 12H x 35W opening) with (2) non-locking push buttons and louvers for compartment, lower sides open with cargo nets attached with clips in lieu of snaps.	$3,076
1535-0226	Rear cab wall medical cabinet with side access. Cabinet to be 32" high x 32" wide x 24" deep. Includes (2) black cargo nets and (1) adjustable shelf.	$2,144
1535-0227	Additional medical cabinet shelf. Location: rear wall medical cabinet.	$144
1535-0228	ALS side access with full height exterior doors. Includes strikers high and low on ALS doors, access plts on int panel of ALS doors, (2) horizontal backboard sleeves approx 12" above floor accessed from officer side, (2) stair chair sleeves above backboards accessed from officer side and (2) stokes backets sleeves above stair chairs accessed from both sides.	$8,383

1535-0229	Medical cabinet mounted on rear wall of cab 55 x 40 x 15 with a locking roll up door. Lower door opening raised to provide hand clearance.	$3,144
1535-0230	Lock box in rear wall medical cabinet; floor mounted. 12H X FW X 12D with a locking horizontally hinged drop down door. Finish will match interior of cab.	$583
1535-0231	Notch upper rear top of center rear wall medical cabinet for dealer installed equipment. Notch to be 6"H x 6"D x FW.	$444
1535-0232	Reverse hinge driver and officer side exterior medical cabinet compartment door. Includes vertically mounted drip rail along forward area of compartment opening (in addition to the horizontal drip rail above the door opening).	$149
1535-0233	Upper forward vista area cabinet. Cabinet to be full width and height of vista area forward of rear cab doors. Includes (3) horizontally hinged lift-up doors. Outboard compartments to be approx. 12" wide. Driver side compartment to include locking latch and partition wall.	$3,018
1535-0234	Driver side cab wheel well medical cabinet approximately 42x22(25 Quest)x28. Includes external locking pan door painted job color. No shelves provided.	$2,123
1535-0235	Upper forward vista area cabinet. Cabinet to be full width and height of vista area forward of rear cab doors. Includes (3) equally spaced compartments with driver and center cargo netting and officer lift-up door.	$2,921
1535-0236	Compartment rear side of cab "under riser" type. Approx 9W x 30H opening. Includes single pan hinged door with 1/4 turn d-ring handles and pass through to bench if equipped. Long cab with medium door location only. Location: driver and officer side.	$914
1535-0237	Driver side cab wheel well medical cabinet approximately 28x22(25 Quest)x28. Includes external locking pan door painted job color. No shelves provided.	$2,123
1535-0238	Special medical cabinet on rear wall. Includes lower side access only with (2) adjustable shelves with 1" lips all the way around, (1) fixed shelf with 1" lips all the way around, upper front area with drop down door with (2) non-locking push buttons, lower sides open with cargo nets attached with clips in lieu of snaps, upper side officer with vertically hinged door with non-locking push button latch.	$7,849
1535-0239	ALS side transverse access. Includes strikers high and low on ALS doors, access plts on int panel of ALS doors, (2) equally spaced vertical paritions up high for backboard sleeves/shovel/misc, (1) floor mounted SlideMaster bi-directional tray and (1) transverse adjustable shelf between tray and upper storage. Includes extended floor(s).	$4,964
1535-0240	Medical cabinet mounted on rear wall of cab full height (as applicable)X40X20 with locking roll up door. For use with vista cabs only. Lower door opening raised to provide hand clearance.	$4,190
1535-0242	Driver side cab wheel well medical cabinet approximately 42 x 22 (25 Quest) x 28. Includes external locking pan door painted job color with Tri-Mark latch. Cabinet includes (1) adjustable shelf.	$2,361
1535-0243	Officer side cab wheel well medical cabinet approximately 42 x 22 (25 Quest) x 28. Includes external locking pan door painted job color with Tri-Mark latch. Cabinet includes (1) adjustable shelf.	$2,361
1535-0244	Compartment rear side of cab below floor. Approx 9W x 19.5H opening. Includes single pan hinged door with 1/4 turn d-ring handles. Long cab with medium door location only. Location: driver and officer side.	$914
1535-0245	Upper forward vista area cabinet. Cabinet to be full width and height of vista area forward of rear cab doors. Includes (3) equally spaced compartments with horizontally hinged lift-up doors, compartment dividers and center locking door latch.	$3,116
1535-0247	Interior medical cabinet. Locate to rear of engine cover. Cabinet to be 22" H x 45" W x 20" D. Cabinet to be open rear with 1" lower lip and a cargo net style cover over rear opening. Inlcudes (1) adjustable shelf.	$1,176
1535-0248	Interior medical cabinet. Locate to rear of engine cover. Cabinet to be 20.75" H x 45" W x 22" D. Cabinet to have a 2" lip around top, open rear with 1" lower lip, cargo net style cover over rear opening and (1) adj shelf. Interior to be DA finish.	$1,371
1535-0249	Interior medical cabinet. Locate to rear of engine cover. Cabinet to be 32" high x 45" wide x 18" deep with sliding Lexan doors. Includes (1) adjustable shelf.	$2,978
1535-0250	Officer side cab wheel well medical cabinet approximately 26 x 22 (25 Quest) x 28. Includes external locking pan door painted job color with Trimark exterior latch, dual nader pins and interior hinged full height door with locking push-button latch.	$2,892
1535-0254	Rubber floor matting on interior of all medical cabinet floors.	$195
1535-0255	Compartment rear side of cab "under riser" type. Approx 9W x 30H opening. Includes double pan hinged door and pass through to bench if equipped. Long cab with medium door location only. Location: driver side.	$914
1535-0256	Officer side cab wheel well medical cabinet approximately 42x22(25 Quest)x28. Includes external locking pan door painted job color and interior cargo net. Cabinet includes (2) adjustable shelves.	$2,695
1535-0257	Driver side cab wheel well medical cabinet approximately 42x22(25 Quest)x28. Includes external locking pan door painted job color and interior cargo net. Cabinet includes (2) adjustable shelves.	$2,695
1535-0258	Medical cabinet mounted on rear wall of cab 63X40X20 with a front locking roll up door, sides open with cargo nets attached with clips in lieu of snaps and (2) adjustable shelves with 1" lips all the way around. Lower door opening raised 12" to provide area for rear heaters. Includes lower ventilation, front access and removable sub-floor for additional access.	$3,762
1535-0259	Officer side cab wheel well medical cabinet approximately 42 x 22 (25 Quest) x 28. Includes external locking pan door painted job color. Cabinet includes (1) adjustable roll-out tool board	$3,237
1535-0260	Driver side cab wheel well medical cabinet approximately 42 x 22 (25 Quest) x 28. Includes external locking pan door painted job color. Cabinet includes (1) adjustable roll-out tool board	$3,237

1535-0261	Upper forward vista area cabinet. Cabinet to be full width, height and depth of vista area forward of rear cab doors. Includes (2) equally spaced compartments with horizontally hinged lift-up doors and compartment divider. Cabinet shall match cab interior.	$3,116
1535-0263	ALS - Side access. Includes compts on each side of cab with exterior locking roll-up doors, extended cab floor and three adj shelves in each cabinet.	$5,031
1535-0264	ALS - Side access. Includes compts on each side of cab, strikers high and low on exterior doors, access plts on int panel of exterior doors, satin finish ROM roll-up doors on interior, extended cab floor and three adj shelves. Includes pass-thru under bench seat (if equipped).	$5,237
1535-0265	Medical cabinet mounted on rear wall of cab 55X44X20 with angled corners and locking roll up door. Lower door opening raised to provide hand clearance.	$3,875
1535-0266	Compartment rear side of cab. Approx 22W x 60H opening. Includes double pan hinged door, (3) adjustable upper shelves and (2) 8" diameter tubes recessed 4" in the floor (driver side only). Location: driver and officer side.	$2,444
1535-0267	Upper forward vista area cabinet. Cabinet to be full width and height of vista area forward of rear cab doors. Includes (3) equally spaced compartments with driver/officer lift-up doors and center cargo netting.	$2,921
1535-0268	Officer side cab wheel well medical cabinet approximately 26 x 22 (25 Quest) x 28. Includes external locking pan door painted job color with Trimark exterior latch, dual nader pins and interior hinged full height door hinged outboard with locking push-button latch.	$2,892
1535-0269	Medical cabinet mounted on rear wall of cab 48 x 40 x 12 with locking roll up door. Lower door opening raised to provide hand clearance.	$3,875
1535-0270	Officer side cab wheel well medical cabinet approximately 42x22(25 Quest)x28 divided into (2) areas. Includes half height external locking pan door painted job color and upper interior cargo net. Cabinet includes exterior access only for lower and interior access only for upper.	$2,695
1535-0271	Driver side cab wheel well medical cabinet approximately 42x22(25 Quest)x28 divided into (2) areas. Includes half height external locking pan door painted job color and upper interior cargo net. Cabinet includes exterior access only for lower and interior access only for upper.	$2,695
1535-0272	Medical cabinet mounted on rear wall of cab 50X36X14 with non-locking roll up door. Cabinet mounted at minimum 18" above floor with 3x3 forward post mounts. Vista cabs only.	$3,797
1535-0273	Compartment dividers with rubber floor matting on interior of vista cabinet floor.	$244
1535-0275	Medical cabinet mounted on rear wall of cab 55 x 30 x 20 with a locking roll up door. Lower door opening raised approx. 12" to provide space for rear wall heaters and notch for transverse riser. Includes louvers and false floor.	$3,718
1535-0276	Medical cabinet mounted on rear wall of cab 40.5X36X16 with non-locking roll up door. Cabinet mounted at approx. 16" above floor with 3x3 forward post mounts. Includes (2) adjustable shelves.	$3,797
1535-0278	ALS - Side access. Includes compts on each side of cab, strikers high and low on ALS doors, access plts on int panel of ALS doors with Tri-Mark latches, extended cab floors, smooth plate rear kick plates and two adj shelves. Includes pass-thru under bench seat if equipped.	$3,712
1535-0279	Officer side cab wheel well medical cabinet approximately 26 x 22 (25 Quest) x 28. Includes external locking pan door painted job color with Trimark exterior latch and dual nader pins. No interior access.	$2,892
1535-0280	Interior medical cabinet. Locate to rear of engine cover. Cabinet to be 26" H x 34" W x 14" D. Cabinet to be open rear with a sweep out floor and a cargo net style cover over rear opening. Inlcudes (1) adjustable shelf.	$1,176
1535-0281	Upper forward vista area cabinet. Cabinet to be full width and height of vista area forward of rear cab doors. Includes (2) equally spaced compartments with horizontally hinged lift-up doors and compartment divider.	$3,116
1535-0282	Rear cab wall medical cabinet with side access. Cabinet to be 50" high x 38" wide x 24" deep. Includes (2) black cargo nets and (3) adjustable shelves.	$2,583
1535-0283	ALS - Side access. Includes compartments on each side of cab, strikers high and low on exterior doors. Includes access plates on interior panel of exterior doors, satin finish ROM roll-up doors with 19" wide opening on interior (bottom raised to riser height), extended cab floor and three adjustable shelves. Cabinet Includes transverse riser with backboard storage. The interior riser jets/protrudes forward between side wall ALS cabinets to allow heaters (if so equipped) not interfere or impede upon transverse storage/ pass-thru of backboards and other equipment stored under the riser in the transverse storage area.	$5,627
1535-0284	Rear cab wall medical cabinet with side access doors (one each side). Cabinet to be 32" high x 38" wide x 24" deep. Includes (2) locking roll-up doors (satin finish) and (1) adjustable shelf, front bolt-on access panel and 1"X1" angle on perimeter of top. Lower door openings raised to provide hand clearance.	$3,001
1535-0285	Upper forward vista area cabinet. Cabinet to be full width and height of vista area forward of rear cab doors. Includes (3) horizontal hinged lift-up doors. Outboard officer side compartment to be approx. 12" wide; driver and center equally sized. Includes cargo netting over each opening.	$2,921
1535-0287	Driver side cab wheel well medical cabinet approximately 42 x 24 (27 Quest) x 28. Includes external locking pan door painted job color and interior hinged full height door with locking push-button latch. Cabinet includes (2) adjustable shelves.	$2,479
1535-0288	Officer side cab wheel well medical cabinet approximately 42 x 24 (27 Quest) x 28. Includes external locking pan door painted job color and interior hinged full height door with locking push-button latch. Cabinet includes (2) adjustable shelves.	$2,479
1540-0001	Map box dual storage	$541
1540-0005	Map Box Rectangular Tall	$508
1540-0006	Map box suspended with drop-down doors.	$558
1540-0007	Map Box with Angle Storage. Angled side to face officer.	$481

1540-0008	Map box suspended with officer's map storage.	$674
1540-0014	All map boxes in the cab to be swirled with clear coat	$558
1540-0015	Map box suspended with drop-down door. Box offset to rear to allow engine access door to open further.	$558
1540-0016	Map box suspended with officer front drop down door with (4) slots and driver rear drop down door with (4) slots.	$663
1540-0017	Map box with angled top on rear of engine cover. Includes lift up door with gas shock.	$552
1540-0018	Map Suspended with Officer's Map Storage. (6) storage slots for 4" binders, (1) additional storage slot for county custom map book.	$674
1540-0020	Map box with 3 compartments on rear of engine cover. Forward compartment has angle lift-up door with gas shocks. Rear of box has top and rear compartments with hinged doors.	$1,129
1540-0021	Map box suspended 34" wide with (3) drop down doors.	$663
1540-0022	Map / medical box on rear of engine cover. Officer's side front has map box w/drop down door. Rear has two compts w/vert hinged doors. Left side includes one adj shelf.	$2,046
1540-0023	Map box suspended rear facing with drop down door. Box offset to rear to allow engine access door to open further.	$558
1540-0024	Map / medical box on rear of engine cover. Front has 2 map boxes w/3 horz slots ea and drop down doors. Rear has 2 compts w/vert hinged doors.	$2,280
1540-0025	Map box suspended with officer's map storage.	$674
1540-0026	Locking map box door. Map box door to include a locking push-button latch. Key type to be CH751.	$78
1540-0027	Map box suspended with officer front drop down door with (4) slots and driver rear drop down door with (2) slots.	$663
1540-0028	Map box suspended with full width lower storage and officer's map storage.	$674
1540-0030	Map Box Rectangular. Front storage area with hinged lid and push button latch, to have (3) equal storage spaces. Center mounting area. Rear storage area with hinged lid and push button latch, to have (2) equal storage spaces.	$481
1540-0031	Map Box Suspended with Drop Down Door 17H x 34W x 14D. Box offset to rear to allow engine access door to open further.	$675
1540-0032	Map box suspended with driver's map storage.	$674
1540-0033	Map Box located on rear of engine cover to be approx 45"L x 13.5" W x 11.5"D.	$1,323
1540-0034	Map box suspended 37" wide with (3) drop down doors.	$663
1540-0035	Rear engine cover rectangular map box 12H X 13.75W X 31L. Includes (3) slots driver, open center, (2) slots officer side and cargo net cover.	$931
1540-0036	Storage box with hinged top with push-button latch. Box to be mounted to rear of engine cover and to rear of map box (hinge to forward edge). Size: 27" h x 34" w x 12" d	$430
1540-0037	Map box suspended with drop-down doors, 15" H x 37.5" W x 14" D with (4) slots each side.	$558
1540-0038	Storage box with sliding aluminum plate doors. The doors to be secured with a tethered push-button ball pin fastener. Box to be mounted rear facing on rear of engine cover. Size: 27" H x 34" W x 12" D outside dimensions.	$1,283
1540-0039	Map box / rear engine cover medical cabinet. Includes forward facing map box with 2 drop down doors and incorporated rear engine cover medical cabinet with roll-up door.	$4,297
1540-0040	Map box suspended with drop down doors. 34"W x 10"H x 12"D	$558
1540-0041	Map box OCFA. Located in the crew area between the wheel wells on the upper engine cover rear of the 3X3.	$984
1540-0042	Map box suspended with driver and officer front drop down door and officer rear drop down door. Includes (4) slots on officer side and map storage on driver side.	$774
1540-0045	Map box rectangular with rear hinged door. 11"L (front to rear) x 20"W (side to side) x 6"D.	$481
1540-0046	Map box binder storage approx. 13"H x 11"W x 4" front to back. Location: (1) each side on interior wall of medical cabinet walls. Includes lid with mechanical latch. To match cab interior color.	$528
1540-0047	Map box with 3 compartments on rear of engine cover. 2 compartments on top will be hinged back to back. Forward compartment has lift-up door with gas shocks. Rear of box has top and rear compartments with hinged doors. Lower compartment will be approx 7" high.	$1,129
1540-0049	Map box suspended with drop down doors. Driver door approx. 15.5"W, officer door approx. 19.5"W. 35"W x 11"H x 13.5"D. Includes (1) vertical partition 4" from officer side and (1) vertical partition 15.25" from driver side. Driver side and center sections to each have a horizontal shelf centered.	$558
1540-0050	Storage box with hinged top and push-button latch. Box to be mounted on rear of engine cover (hinge to forward edge), angled same as upper engine cover. Size: 15"H x 35"W x 7"D. Quest cabs only.	$430
1540-0051	Map box suspended with drop-down doors. 34"W x 9.50"H x 12"D.	$558
1540-0052	Auto Pulse storage box with hinged top and push-button latch. Box to be mounted on floor rear of engine cover (hinge to forward edge), angled same as lower engine cover. Size: 12"H x 44"W x 8"D(bottom)/11"D(upper).	$558
1540-0053	Rear lower engine cover mounted storage box. To be approx. 44" W x 8" H x 12" D. Includes (3) equally spaced dividers. Includes cargo net cover.	$931
1540-0054	Map box with two (2) compartments on rear of engine cover. Upper compartment to have lift-up door with one (1) hold-open and latch. Lower compartment to have drop down door with latch (accessible from the rear of the box).	$1,129
1540-0056	Rear engine cover rectangular map box angled to match upper and lower vertical engine cover. 11"H X 12"W (front to rear) X 42.5"L. Includes (6) storage slots approx. 14"L x 6"W with (3) retaining straps front to rear, (1) over each area.	$931
1540-0057	Map box suspended with driver and officer front and rear drop down doors. Includes (4) slots on each side.	$774

1540-0060	Storage box with hinged top with push-button latch. Box to be mounted to rear of engine cover and to rear of map box (hinge to forward edge). Size: 17H x 34W x 12D.	$430
1540-0063	Map box suspended with (9) vertical slots.	$674
1540-0064	Map box suspended with (9) vertical slots and (1) full width horizontal slot.	$774
1540-0065	Map box suspended 37" wide with (3) drop down doors.	$767
1540-0066	Map box suspended with officer's map storage. Includes (4) equal slots on officer side and (1) driver slot equal to top officer slot.	$674
1540-0068	Storage box with hinged top with push-button latch. Box to be mounted on the forward engine cover (hinge to forward edge). Size: 6"H x 20"W x 11"D(front to rear). Includes partition approx. 5.75" from driver side. Box to match cab interior.	$430
1540-0069	Map box suspended 34"W x 6"H x 12"D with driver and officer front and rear drop down doors. Includes (2) slots on each side. Locate just below AC.	$774
1540-0070	Rear lower engine cover mounted storage box. To be approx. 44" W x 12" H x 12" D. Includes (1) center side to side divider with bungee cord cargo net cover.	$931
1540-0071	Map box suspended with (1) drop down door. 14"W x 9.5"H x 12"D	$518
1540-0072	Map Box with Angle Storage. Angled side to face officer. Includes single divider between angle storage and deep storage. Located on forward engine cover.	$481
1540-0073	Map box suspended with drop-down doors and (1) shelf each side. 34"W x 9.50"H x 12"D.	$558
1540-0075	Map box suspended with drop down doors. 34"W x 6"H x 13.5"D	$558
1540-0077	Rear storage box on rear engine cover. Open box with forward hinged diamond plate lid and push-button latches. Box size shall be 44" wide X 12" deep X 8" high.	$558
1540-0079	Map box suspended with drop-down doors. Approximately 34"W x 9.50"H x 13"D.	$765
1540-0080	Map box suspended with drop-down door installed on the rear of the box to provide accessibility from the rear. Box offset to rear to allow engine access door to open further.	$558
1540-0081	Rear engine cover rectangular map box approximately 10"H X 14"W X 14"D. The depth shall have (2) dividers equally spaced. Open top with cargo net cover.	$430
1540-0082	Map box suspended with drop-down doors. 34"W x 9.50"H x 12"D. (3) Slot officer's side, open driver's side.	$558
1540-0083	Map box rear facing. Lids only to be swirl plated with clear coat. Reference 581402.	$1,110
1540-0084	Rear engine cover rectangular map box approximately 8.125"H (top to bottom) X 26"W (side to side) X 6.875"D (front to rear). The map box shall mount on the rear of the engine cover, on the lower horizontal surface at rear. The depth (front to rear) shall have (1) divider going from side to side, 2.5" from the rear to provide a front and rear compartment. The width (side to side) shall be divided equally going front to rear to provide (4) compartments. There shall be 3 open top radio boxes mounted to the rear lower of the map box. Each radio box will be 3.25" H X 3.25"W X 2.125" D. Radio boxes shall be mounted (2) 1" inboard each side and (1) centered at base of map box. Open top with cargo net cover. See layout in shop order file.	$586
1540-0085	Map box suspended with drop-down doors and (1) shelf each side. Box offset to rear to allow engine access door to open further.	$558
1540-0086	Map box suspended with rear facing sliding Lexan doors, 15" H x 34" W x 12" D. Includes center partition and officer side shelf centered.	$675
1540-0087	Map box suspended with officer's map storage with quarter latches.	$674
1540-0089	Map box/radio cabinet suspended with drop-down doors 34x14x12. Includes louvers on officer side lower door, side wall and floor. Box offset to rear to allow engine access door to open further.	$813
1540-0090	Map box suspended with drop-down doors. Includes center vertical divider only.	$558
1540-0091	Map box suspended with drop-down doors and (1) shelf each side. 24"W x 9.50"H x 12"D.	$558
1540-0092	Map box binder storage approx. 13"H x 11"W x 4" front to back. Location: on interior facing wall of officer side medical cabinet. Includes lid with mechanical latch. To match cab interior color.	$264
1540-0093	Map box suspended with drop-down doors. Includes (1) adjustable shelf (no partition). Box offset to rear to allow engine access door to open further.	$558
1540-0094	Map box suspended with rear facing drop-down doors and (1) shelf each side. 34"W x 9.50"H x 12"D.	$558
1540-0095	Map box suspended with (1) drop-down door, (1) full width 2" high upper shelf, center lower vertical divider and (1) shelf each side of divider. 34"W x 9.50"H x 12"D.	$558
1540-0096	Map box suspended with drop-down doors, 15" H x 37.5" W x 14" D with (3) slots officer and (2) slots driver.	$558
1540-0098	Map box suspended with driver and officer front drop down door and driver rear drop down door. Includes (3) slots on officer side and map storage on driver side.	$774
1540-0100	Map box suspended with drop down doors. 34"W x 6"H x 13.5"D. (1) officer shelf only.	$558
1550-0001	Map pockets cab front doors diamond plate	$182
1550-0002	Map pockets cab front doors stainless steel.	$149
1550-0007	All cab exterior access doors to have CH751 keyed locks.	$180
1550-0008	Fixed rear cab wall windows (pr). Not available with side mount pump module applications.	$118
1550-0009	Fixed rear cab wall narrow windows (pr).	$115
1550-0010	Sliding rear cab wall windows (pr). Windows are drop style and not available with side mount pump module applications.	$261
1550-0013	Driver and Officer door windows. Includes electric roll-down actuation. Each door to have individual control at door position and the driver door is to have master control for all power window locations.	$1,484
1550-0014	Rear crew cab door windows. Includes electric roll-down actuation. Each door to have individual control. Not available with paddle style door latching.	$1,484
1550-0015	Stainless steel protective trim on rear edge of cab door openings. E-ONE custom chassis only.	$227
1550-0017	Cab door panels stainless steel.	$1,324

1550-0018	Scuff plates stainless steel (Set). Not available with paddle latches.	$105
1550-0019	Windows cab side sliding driver side.	$267
1550-0022	Cab roof vent with fan (pair). Each vent switched next to vent. Location: (1) each side centered above rear cab doors.	$811
1550-0023	Windows rear sliding vista. Requires raised roof option	$440
1550-0024	All cab doors shall have exterior paddle latches.	$619
1550-0029	Map pockets cab rear doors diamond plate	$156
1550-0030	Map pockets cab rear doors, stainless steel.	$189
1550-0032	Windows cab side sliding officer side.	$267
1550-0037	(4) Incandescent cab step area lighting. Locate each light in [#LOC]. Lights to be switched with door ajar.	$156
1550-0038	(4) LED cab step area lighting. Locate each light [#LOC]. Lights to be switched with door ajar.	$615
1550-0039	Door mounted red incandescent flashing lights (4). Locate lights [#LOC]. Lights to be switched with door ajar.	$156
1550-0040	Door mounted red LED flashing lights (4). Locate lights [#LOC]. Lights to be switched with door ajar.	$369
1550-0041	Door mounted amber incandescent flashing lights (4). Locate lights [#LOC]. Lights to be switched with door ajar.	$156
1550-0042	Door mounted amber LED flashing lights. Locate lights [#LOC]. Lights to be switched with door ajar.	$369
1550-0043	All cab door kick plates to be made from smooth plate aluminum with DA finish.	$303
1550-0045	All cab door kick plates to be made from stainless steel plate.	$634
1550-0046	Canadian flag reflective material in place of striping for interior cab doors.	$91
1550-0047	All (4) cab doors to have double strap. Straps to be sewn together.	$149
1550-0050	All cab exterior cab locks to be keyed for #CH751 locks. Orange County.	$265
1550-0052	Federal LED Delta Ray amber/red warning lights, bottom of cab doors (interior), wired to door switches.	$1,830
1550-0053	Aluminum interior rear cab door handrails (PR) IPOS.	$331
1550-0054	All cab exterior access doors to have 1250 keyed locks.	$573
1550-0055	Door mounted Whelen 500 series red TIR6 LED flashing lights (4) w/clear lenses. Locate lights [#LOC]. Lights to be switched with door ajar.	$1,234
1550-0056	Cab door insert (ea) - Carbon fiber style. Quest cab only.	$230
1550-0057	Cab door insert (ea), stainless steel. Quest cab only.	$337
1550-0061	Rear crew cab door window. Includes electric roll-down actuation. Not available with paddle style door latching. For use with 3 door cab only.	$745
1550-0063	(3) LED cab step area lighting. Locate each light in [#LOC]. Lights to be switched with door ajar.	$462
1550-0066	Cab door kickplates fastened with screws.	$235
1550-0067	[#COL] chevron "V" stripe on lower cab door panel approx 18" high. Stainless steel door panels only. CIIX and TyphoonX only.	$292
1550-0069	Reflective [#COL] 3M Diamond Grade striping positioned in the "A" formation located on the cab door panels.	$297
1550-0070	All (4) cab doors to have double door straps. Straps to be long enough to allow the door to open to a max of 90 degrees.	$293
1550-0071	ABS cab door panels and lower kick panels to be fastened with screws. No drive rivets.	$391
1550-0072	Cab door panels aluminum painted Zolatone gray.	$1,324
1550-0073	[#COL] chevron "A" printed stripe on lower cab door panel approx 18" high. Stainless steel/painted door panels only. CIIX and TyphoonX only.	$292
1550-0074	[#COL] chevron "A" stripe on entire lower cab door kick plate. Stainless steel or smooth plate kick plates only. CIIX and TyphoonX only.	$292
1550-0075	Door mounted red LED flashing lights (3). Locate lights [#LOC]. Lights to be switched with door ajar.	$278
1550-0078	Map pockets 14 gauge stainless steel. Includes vinyl trim around top of opening and nylon strap with snap to retain contents. Location: front cab doors.	$401
1550-0079	Rubrail Guard with endcaps for cab door strip lights.	$389
1550-0080	[#COL] chevron "A" printed stripe on lower cab door panel approx 12" high. Stainless steel door panels only. CIIX and TyphoonX only.	$292
1550-0081	Cab door locks - electric. Includes driver side exterior touchpad, (2) remote key fobs, barrel style key lock on exterior of each door and manual interior lock on each door.	$1,179
1550-0085	All cab exterior access doors to have J236 keyed locks.	$573
1550-0086	Door mounted red LED flashing lights (2). Locate lights [#LOC]. Lights to be switched with door ajar.	$186
1550-0087	[#COL] Diamond Grade chevron "A" stripe on lower cab door panel approx 12" high. Stainless steel/painted door panels only. TyphoonX, CIIX and QST2 only.	$485
1550-0088	[#COL] chevron 2" "A" stripe on lower cab door panel approx 12" high. Stainless steel door panels only. CIIX and TyphoonX only.	$292
1550-0095	One touch down operation for cab door electric windows.	$2,496
1550-0096	Door mounted Whelen amber M6AC LED flashing lights (4) w/clear lenses. Lights to alternate flash top and bottom on each light. Locate lights [#LOC]. Lights to be switched with door ajar.	$1,324
1550-0097	Nader pin guards on front cab doors.	$133
1550-0098	Stainless steel protective trim on rear edge of cab door openings. E-One Quest chassis only.	$227
1550-0099	Scuff plates stainless steel (Set). Approx. 7"x7" to encompass door handle and lock. Not available with paddle latches.	$227
1550-0100	Polished stainless steel protective trim on rear edge of cab door openings. E-ONE custom chassis only.	$251

1550-0101	Polished stainless steel scuff plates for exterior cab door handles (set). Not available with paddle latches.	$109
1550-0102	Rear crew cab door windows with rear fixed panel. Includes electric roll-down actuation. Each door to have individual controls. For use with paddle style door latching.	$1,665
1550-0103	Rear crew cab door windows with rear fixed panel. Includes manual roll-down actuation. For use with paddle style door latching.	$180
1550-0106	[#COL] chevron "A" stripe on lower cab door panel approx 24" high. Stainless steel door panels only. CIIX and TyphoonX only.	$292
1550-0107	[#COL] chevron "A" stripe on lower cab door panel approx 6" high. Stainless steel door panels only. CIIX and TyphoonX only.	$209
1550-0108	Stainless steel protective trim on rear edge of rear cab door openings. E-ONE custom chassis only.	$114
1550-0109	[#COL] Diamond Grade chevron "A" stripe on lower cab door panel approx 18" high. Stainless steel/painted door panels only. TyphoonX, CIIX and QST2 only.	$485
1550-0114	Map pockets cab front doors aluminum plate painted Zolatone gray.	$170
1550-0115	Map pockets cab rear doors aluminum plate painted Zolatone gray.	$170
1550-0116	Cab door locks - electric; 2DR cab only. Includes driver side exterior touchpad, (2) remote key fobs, barrel style key lock on exterior of each door and manual interior lock on each door.	$911
1550-0117	Scuff plates stainless steel (PR) door lock. For use with paddle latches.	$55
1550-0120	Door panels cab alum painted Zolatone black.	$1,324
1550-0121	Cab door strap one (1) additional to standard straps shall be provided. Location: One (1) each cab door.	$143
1550-0127	Door mounted Whelen M4RC LED flashing lights (4) w/clear lenses. Locate lights [#LOC]. Lights to be switched with door ajar.	$1,214
1550-0128	(4) Whelen LED cab step area lighting. Locate each light [#LOC]. Lights to be switched with door ajar.	$797
1550-0129	Enclosures for electric door window actuation switch(s) shall be stream lined, (1) switch behind another (not side by side) mounted in an enclosure to match the door's interior IPOS. Each door to be individually controlled. The driver shall have control for all electrically actuated windows.	$233
1550-0130	Stainless steel protective trim on rear edge of rear ALS cab door openings. E-ONE custom chassis only.	$114
1550-0131	Removable access panel on each cab door to the regulator and latch.	$500
1550-0132	Driver and Officer door windows. Includes electric roll-down actuation. Each window to be individually controlled at each door. Each window switch will be flush mounted as far forward on the door as possible with minimal or no switch mounting protrusion. The driver side will NOT have controls for all electrically actuated windows but rather a single switch for the driver door window only.	$1,692
1550-0134	Polished stainless steel trim on bottom edge of the over wheel cab compartment opening (ea).	$35
1550-0135	Stainless steel trim on the vertical edge of the over wheel cab compartment opening (ea).	$48
1550-0136	Polished stainless steel trim on the vertical edge of the over wheel cab compartment opening (ea).	$63
1550-0137	A removable access panel shall be incorporated into the interior cover panel(s) of each cab door to permit easy access to the latch mechanism.	$500
1550-0138	Door mounted Whelen M2 red super LED flashing lights (4). Locate lights on each cab door in the outboard position. Each individual light shall be activated by the corresponding cab door ajar circuit.	$1,086
1550-0139	Each cab door shall have stainless steel trim on the trailing edge of the door to include forward door wheel well (radius) area. E-ONE custom chassis only.	$390
1550-0140	Reflective [#COL] 3M Diamond Grade striping positioned in the "A" formation located in the lower cab door panels, extending approximately 14" from the door's bottom.	$346
1550-0141	Polished stainless steel protective trim to wrap cab door jambs on all (4) entry doors. Trim to extend 3" past closed door edge (as applicable). E-One custom chassis only.	$1,117
1550-0142	The cab door inserts shall have the fastening hardware upgraded to nutserts and stainless steel hardware IPOS.	$57
1550-0143	Reflective [#COL] 3M Diamond Grade striping positioned on the upper SS insert IPO lower door area.	$445
1550-0144	Reflective [#COL] individual striping positioned in the "A" formation located on the cab door panels.	$215
1550-0145	[#COL] chevron "A" individual stripes on lower cab door panel approx 18" high. Stainless steel/painted door panels only. CIIX and TyphoonX only.	$363
1550-0146	[#COL] chevron "A" individual stripe on lower cab door panel approx 12" high. Stainless steel/painted door panels only. CIIX and TyphoonX only.	$325
1550-0147	Location - Front door map pockets shall be located approximately 17" below window.	$102
1550-0148	Reflective [#COL] 3M Diamond Grade striping positioned in the "A" formation located in the lower cab door panels, extending approximately 12" from the door's bottom.	$327
1550-0149	Cab door kick plates made from diamond plate aluminum shall be overlaid on top of the existing door panel (Zolatone, stainless steel etc). The kick plates shall be 16" in height.	$200
1550-0150	Rear crew cab door windows with rear fixed panel. Includes electric roll-down actuation. Each door to be individually controlled. Each window switch will be flush mounted below rearward fixed window area with minimal or no switch mounting protrusion. For use with paddle style door latching.	$1,692
1550-0151	The map boxes attached to cab doors shall include press on black trim. The trim shall be applied along the edge of map box opening.	$77
1550-0154	Chrome edge guard on rear vertical edges of cab doors.	$76

1550-0155	Rear crew cab door window with rear fixed panel. Includes electric roll-down actuation. Door to be individually controlled. For use with paddle style door latching.	$834
1550-0160	Cab door locks - electric. Includes (2) remote key fobs, barrel style key lock on exterior of each door and manual interior lock on each door.	$718
1550-0161	Warning light Whelen 500 Super LED (4) red model 50R03ZCR lights with clear lenses. Flashing lights wired through each individual door. Location: One on each of the interior cab doors (outboard position).	$1,160
1550-0162	Door mounted Whelen 500 series amber TIR6 LED flashing lights (2) w/clear lenses. Locate lights on each cab door in the outboard position. Lights to be switched with door ajar.	$618
1550-0163	Map pockets cab rear doors aluminum plate painted Zolatone black.	$170
1550-0166	Stainless steel protective trim on rear edge of cab door openings. Includes front cab door lower angle areas. E-ONE custom chassis only.	$275
1550-0167	Reflective Blue 3M Scotchlite and Fluorescent Yellow Green 3M Diamond Grade striping positioned in the "A" formation located in the lower cab door panels.	$297
1550-0171	(4) TecNiq LED cab step area lighting. Locate each light [#LOC]. Lights to be switched with door ajar.	$211
1550-0173	Stainless steel trim on bottom edge of the over wheel cab compartment opening (ea). Vertical trim edge to be 3" tall.	$121
1550-0174	Reflective [#COL] 3M Diamond Grade striping positioned in the "A" formation located in the entire SS cab door panels below the windows.	$911
1550-0175	Door mounted Whelen model 0SA00MCR LED flashing lights. Locate lights [#LOC]. Lights to be switched with door ajar.	$282
1550-0176	Door mounted Whelen 3SR00FRR red super LED flashing lights (4). Locate lights [#LOC]. Each individual light shall be activated by the corresponding cab door ajar circuit.	$702
1550-0177	[#COL] Reflexite V98 striping positioned in the "A" formation located on the cab door panels.	$240
1550-0178	[#COL] Reflexite V98 chevron "A" stripe on lower cab door panel approx 12" high. Stainless steel/painted door panels only. TyphoonX, CIIX and QST2 only.	$331
1550-0179	[#COL] Reflexite V98 chevron "A" stripe on lower cab door panel approx 18" high. Stainless steel/painted door panels only. TyphoonX, CIIX and QST2 only.	$367
1550-0180	Cab door panels stainless steel. Includes upper and lower panels with seam below handrail.	$1,520
1550-0181	[#COL] chevron "A" printed stripe on lower cab door panel below map pockets to bottom of door. Stainless steel/Zolatone door panels only.	$292
1550-0182	Door mounted Federal Signal amber MPS600-AA LED flashing lights (4) w/clear lenses. Locate lights [#LOC] . Lights to be switched with door ajar.	$877
1550-0183	Recess in upper rear cab doors in lieu of windows (PR). (1) each side approx. 10L x 5W x 3D for latex glove box. Includes (2) velcro straps for each recess to be mounted at final inspection.	$564
1550-0184	Map pockets cab front doors aluminum plate painted Zolatone black.	$170
1615-0000	Vista cab 20" with extension for top mount pump panel controls. Includes 4" cap for additional headroom. Note: "Delete down view window" option required with full width pump module.	$10,360
1615-0001	Vista full height rear doors, 12".	$3,535
1615-0002	Vista full height rear doors 16".	$3,701
1615-0003	Vista full height rear doors 20".	$3,867
1615-0013	Vista cab 20" with extension for top mount pump panel controls. Note: "Delete down view window" option required with full width pump module.	$9,895
1615-0015	Diamond plate overlay front of vista slope.	$466
1615-0019	Vista full height rear doors 20". Includes 4" cap for a 24" total raised roof.	$5,250
1615-0020	Side vista roof windows behind rear doors. 80" cab with medium doors only.	$118
1620-0000	Overlay the painted grille with stainless steel	$333
1620-0002	Stainless steel grille for Typhoon X.	$877
1620-0003	Stainless steel grille for Typhoon	$877
1620-0006	CIIX stainless steel grille for Typhoon X.	$877
1640-0000	Step below cab door. Located [#LOC]. Steps under front cab doors shall not interfere with approach angle.	$226
1640-0009	Steps below front cab door - CFR swing style (PR). Includes plunger stop to hold in the down position. Step to be centered below cab step.	$917
1640-0016	Step below cab door; stirrup style without back wall. Located [#LOC]. Steps under Front Cab doors shall not interfere with Approach Angle.	$226
1640-0018	Step below cab door; smooth plate with gator grip painted black durabak. Located [#LOC]. Steps under front cab doors shall not interfere with approach angle.	$297
1640-0025	Steps below front cab door - CFR swing style (PR) painted black Durabak. Includes plunger stop to hold in the down position. Step to be centered below cab step.	$988
1640-0026	Removable bottom panel on cab steps.	$213
1640-0028	Step below cab door Zico VS-20-5 elect swing out/down. Step to extend when door is opened and retract when closed. Steps shall be flush with outter edge of cab when stowed. Location: Each cab door	$1,505
1640-0029	Each cab step well's kick plates and steps shall be aluminum smooth plate IPO diamond plate and all surfaces painted black durabak up to and below cab floor level. All step surfaces provided with a multi-directional, aggressive gripping surface (Gator Grip) incorporated into the aluminum smooth plate.	$593
1640-0030	Each cab step well's kick plates and steps shall be aluminum smooth plate IPO diamond plate and all surfaces painted Gray Zolatone up to and below cab floor level. All step surfaces provided with a multi-directional, aggressive gripping surface (Gator Grip) incorporated into the aluminum smooth plate.	$593

1640-0031	Each cab step well's kick plates and steps shall be aluminum smooth plate IPO diamond plate and all surfaces painted Black Scorpion (rough finish) up to and below cab floor level. All step surfaces provided with a multi-directional, aggressive gripping surface (Gator Grip) incorporated into the aluminum smooth plate.	$593
1640-0032	Step below cab door Zico VS-20-5 elect swing out/down. Step to extend when door is opened and retract when closed. Steps shall be flush with outter edge of cab when stowed. Location: Front cab doors.	$1,505
1640-0034	Steps below rear cab door - CFR swing style (PR) painted black Durabak. Includes plunger stop to hold in the down position. Step to be centered below cab step.	$988
1640-0035	Each cab step well's kick plates and steps shall be aluminum diamond plate without a multi-directional, aggressive gripping surface (Gator Grip). Includes embossed diamond plate bolt-on panels at each lower step area.	$593
1670-0001	Ramco 6001FFR mirrors. Remote controlled with top CAS750 convex. Location: [#LOC].	$1,505
1670-0002	Ramco 6001MCR mirrors. Remote controlled with bottom convex. Location: [#LOC].	$1,195
1670-0003	Velvac 2010 mirrors. Door mounted west coast style with remote control and heat.	$642
1670-0005	Mirror, 8" convex to be cab mounted [#LOC].	$84
1670-0006	1.5" Extension for Ramco Mirrors (OBSOLETE FROM MANUFACTURER)	$156
1670-0007	3" Extension for Ramco Mirrors	$156
1670-0008	4.5" Extension for Ramco Mirrors.	$156
1670-0010	Retrac West Coast mirrors mounted on cab doors.	$295
1670-0013	Both cab mirrors to be heated.	$292
1670-0014	Ramco 6001FFR mirrors. Remote controlled with top CAS750 convex.	$1,490
1670-0015	Velvac 2010 mirrors with marker lights. Door mounted west coast style with remote control and heat.	$676
1670-0017	Mirror Stainless Steel 8" Convex above officer side cab brow, Bell Type Mounting, 2 Piece Adjustable Telescoping Arm. Head #983, Arm #3983	$88
1670-0018	Velvac mirrors model 2025 with LED directional arrows. Door mounted (bottom mount) with remote control and heat.	$1,103
1670-0019	Ramco 6001CCR-750 mirrors. Remote controlled with bottom convex and top CAS750 convex. Location: [#LOC].	$1,602
1670-0020	Rosco mirrors w/marker lights and LED turn signals, remote, heated and convex. Located on front cab corners.	$1,108
1670-0021	Ramco 6001FFR mirrors. Remote controlled with CAS750R top remote convex. Location: [#LOC]	$1,739
1670-0023	Mirror Stainless Steel 8" Convex above driver side cab brow, Bell Type Mounting, 2 Piece Adjustable Telescoping Arm. Head #983, Arm #3983	$88
1670-0028	Rosco AccuStyle 818 door mounted mirrors (bottom mount). Chrome w/LED turn signals, remote, heated and convex.	$1,108
1670-0030	Kenworth model MX148S wide angle mirror. Location: [#LOC].	$177
1670-0031	2" extension for Ramco mirrors.	$156
1670-0032	Ramco 6001FFR mirrors. Remote controlled with top CAS750 convex and LED turn signals. Location: [#LOC].	$2,010
1670-0035	Ramco 6001FFR mirrors with INVUE camera. Remote controlled with top CAS750 convex. Location: [#LOC].	$2,655
1670-0036	Ramco 6001MCR mirrors with INVUE camera. Remote controlled with bottom convex. Location: [#LOC]	$2,655
1670-0038	Lang Mekra mirrors w/LED marker lights and turn signals. Door mounted west coast style with convex, remote control and heat.	$1,300
1670-0039	Moto mirrors model 340530. Door mounted with driver heat; officer remote control and heat.	$1,079
1670-0044	Ramco 6001FFR mirrors with INVUE camera and LED turn signals. Heated/remote controlled flat glass with heated/remoted controlled top CAS750 convex. Location: [#LOC].	$2,581
1670-0046	Ramco 6001MCR mirrors. Remote controlled with bottom convex and LED turn signals. Location: [#LOC].	$1,483
1670-0048	Retrac Aerodynamic remote heated mirrors (PR) mounted on cab doors.	$1,170
1670-0052	Ramco 6000-PCHR mirrors. The mirrors shall incorporate heated and remote for both flat and convex using (2) Ramco model ELE-310 switches. Location: [#LOC].	$1,742
1670-0053	Moto mirrors model 7-2386. Door mounted with remote control and heat.	$910
1670-0054	Velvac mirrors model 2030 chrome with LED directional arrows. Front corner mounted with remote control and heat.	$1,312
1670-0055	Velvac convex mirrors (PR). Model Top Hat bolt-on convex mirror. For use with model 2025 or 2030 mirrors only.	$199
1670-0056	Retrac west coast remote heated mirrors (PR) mounted on cab doors.	$1,246
1670-0059	Retrac Mirror stainless steel 10" 3-arm convex above officer side cab brow, 3 piece adjustable telescoping arm. Head #604953, Arm assy#604671	$274
1670-0061	Retrac west coast remote heated mirrors (PR) with convex lower mounted on cab doors. Includes green marker on officer and red marker on driver.	$876
1670-0063	Velvac mirrors model 2025 with LED directional arrows. Door mounted (bottom mount) with remote control and heat full bottom glass and heated top hat convex. No lower convex.	$1,166
1670-0064	Retrac west coast remote heated mirrors with lights (PR) mounted on cab doors.	$1,246
1670-0065	Retrac Mirror stainless steel 10" 3-arm convex above driver side cab brow, 3 piece adjustable telescoping arm. Head #604953, Arm assy#604671	$274
1670-0066	Ramco 6001FFR black mirrors. Remote controlled with black top CAS750 convex. Location: [#LOC].	$1,749
1670-0067	Ramco model CRM-1752-3HRT-853 mirrors. The mirrors shall incorporate heated and remote for both flat and convex using (3) Ramco model ELE-310 switches. Location: [#LOC].	$2,093

1670-0068	Lang Mekra mirrors w/LED marker lights and turn signals. Black door mounted west coast style with convex, remote control and heat.	$1,300
1675-0001	Stainless steel trim belt on front of cab. Location: [#LOC].	$463
1675-0005	Cab roof vent with-out fan (pair). Location: (1) each side centered above rear cab doors.	$362
1675-0006	Vent w/fan roof mounted, pair.	$811
1675-0013	Mud flaps (PR), front, black with logo.	$155
1675-0014	SCBA bottle storage, two driver side of cab behind rear door with cast doors.	$715
1675-0015	Cab roof mounted diamond plate 3 sided light tower shield with 45 degree front slope.	$919
1675-0016	Cab roof mounted painted job color 3 sided light tower shield with 45 degree front slope.	$1,145
1675-0020	Auto eject stainless steel scuff plate.	$91
1675-0022	Pair of 18" handrails located just behind driver and officer front door one each side.	$360
1675-0023	Pair of 18" handrails located just behind driver and officer rear door (ALS doors if equipped) one each side.	$360
1675-0024	Pair of 36" handrails located just behind driver and officer rear door (ALS doors if equipped) one each side.	$391
1675-0025	SCBA bottle storage, two officer side of cab behind rear door with cast doors.	$715
1675-0030	Mud flaps, front, black with E-ONE logo.	$151
1675-0033	Chrome fire bell with eagle. Location: Officer's side of front bumper extension.	$1,344
1675-0034	Cab driprail drain holes. The driprail just before the vista roof begins to have a drain hole provided (one each side of cab).	$85
1675-0035	Belt size tag. Install next to fluid capacity tag. Tag to provide belt sizes for all belts provided.	$102
1675-0036	Cab wheel well liners. The cab wheel well liners to be aluminum IPO ABS plastic. Paint job color.	$581
1675-0038	Sign plate smooth 30" x 30" mounted on cab roof (vista if equipped). Color: [#COL].	$231
1675-0039	Pair of 48" handrails located just behind driver and officer rear door (ALS doors if equipped) one each side.	$450
1675-0041	Stainless steel trim belt low on sides of cab.	$1,375
1675-0042	Rear cab wall to be smooth 3/16" aluminum plate. Cab wall to be finish painted to match the cab paint scheme.	$338
1675-0043	Sliding rear window mounted above pump panel. Top mount enclosed cab.	$1,083
1675-0045	Hansen white LED cab handrails upgrade (EA).	$189
1675-0048	Rear cab wall to be smooth 3/16" aluminum plate with a diamond plate overlay.	$423
1675-0053	Stainless steel scuff plates full height on rear cab corners (PR)	$233
1675-0054	Sign plate smooth 18"x28" mounted one each side cab roof (vista if equipped). Color: [#COL]	$459
1675-0055	Radio box 18W x 12H x 10D. Location: Centered up high of vista area recessed on the rear exterior cab wall with door hinged to the bottom.	$487
1675-0056	Stainless steel scuff plates on rear cab roof corners (PR)	$177
1675-0057	Mounting plate for battery charger receptacle and indicator - removable brushed stainless steel.	$276
1675-0058	Chrome fire bell with gold eagle. Location: Officer's side of front bumper extension.	$1,416
1675-0059	Rear cab wall to be smooth 3/16" aluminum plate with swirl plate overlay.	$696
1675-0060	Sign plate smooth 40" x 80" mounted on cab roof (vista if equipped). Color: [#COL]	$665
1675-0061	Cab roof mounted 4 sided light tower shield painted job color.	$1,489
1675-0062	Electric chrome fire bell with eagle. Location: Driver's side of front bumper extension. Includes switch on officer side overhead console.	$1,880
1675-0063	Mud flaps, front, black without logo.	$155
1675-0065	Stainless steel roller assemblies for back of cab. (1) each side rear cab corners.	$281
1675-0066	Skid plate under each lower step. Quest cab only.	$417
1675-0067	Cab roof mounted 3 sided light tower shield painted two-tone job color.	$1,145
1675-0071	Remove side grille from wheel well areas of the cab. TyphoonX cab only.	$228
1675-0072	(4) roof mounted (welded) sign plate mounting points. Mounts to space roof sign plate off cab roof and allow for easy removal.	$268
1675-0073	Hose deflector pin to protect Q2B on front bumper extension.	$201
1675-0074	Cab roof mounted 3 sided light tower shield with welded sides and painted job color with 45 degree front slope.	$1,354
1675-0075	Cab roof mounted painted job color 3 sided light tower shield with 90 degree front slope.	$1,145
1675-0076	Cab roof mounted diamond plate 3 sided light tower shield with 90 degree front slope.	$919
1675-0077	Storage box on rear cab roof 48W x 48L x 12H with 4-sided lid painted two-tone job color (if applicable)	$1,870
1675-0078	Hansen red LED cab handrails upgrade (EA).	$189
1675-0079	Diamond plate storage box for Little Giant model 17 on rear cab vista roof. Includes drop down door with push button latches and nylatron on floor.	$1,368
1675-0080	Fixed rear cab wall narrow windows (ea). Location: driver side rear wall.	$59
1675-0081	Smooth plate sides painted job color and diamond plate top/door storage box for Little Giant model 17 on rear cab vista roof. Includes 45 degree front angle, rear backstop, partition, drop down door with push button latches and nylatron on floor.	$3,140
1675-0082	Stainless steel scuff plates full height on Quest rear cab corners (PR).	$424
1675-0084	Side extensions at cab wheel wells for 4x4 application.	$812
1675-0085	Under riser half depth roll-out trays. Includes cab floor extensions. Requires riser height exterior compartments.	$1,215
1675-0086	Raised cab wheel wells for low OAH applications.	$421
1675-0087	Pair of handrails (8" driver and 18" officer) located just behind driver and officer front door.	$464
1675-0088	Fluid capacity tag to include filter model numbers for engine oil, transmission, fuel, air, hydraulic and coolant. Tire size front and rear to be included on tag.	$102

1675-0089	Radio box 18W x 12H x 10D. Location: Up high center rear wall panel offset to driver side of vista area recessed on the rear exterior cab wall with door hinged to the bottom. Includes rubber bumpers on upper corners of door.	$487
1675-0090	Light tower riser ahead of vista. For use with large towers. Installed tower to not exceed over all height of vista roof.	$1,669
1675-0091	Lightbar mounting angles (PR). Position on cab roof with each angle oriented front to rear with one leg welded to cab roof leaving top horizontal surface for lightbar mounting legs.	$272
1675-0092	Number plate mounting. "Z" type extrusions welded to cab roof (upper leg facing out) to support perimeter of sign plate. Allows sign to be attached without drilling through cab roof.	$375
1675-0093	Grille on side of cab over wheel (PR). Grilles are non-venting and for cosmetic purposes only. Includes black-out surface behind grilles.	$237
1675-0094	Microphone/Speaker box. 11"H x 9"W x 6.5"D Location: Centered up high recessed on the rear vista exterior cab wall with vertically hinged door.	$487
1675-0095	Diamond plate storage box on rear cab roof 80W x 36D x 14H with lid.	$1,654
1675-0096	Fixed rear cab wall narrow windows (ea). Location: officer side rear wall.	$59
1675-0109	Polished stainless steel scuff plates full height on Quest rear cab corners (PR).	$424
1675-0110	Cab exterior hand rails to use Austin Hardware model GR-002-AL-BRT-144 knurled bright anodized aluminum tubes IPOS.	$120
1675-0111	Pair of 24" handrails located just behind driver and officer front door one each side. Handrail to extend 6" lower than standard for 4x4 application.	$377
1675-0112	Pair of 24" handrails located just behind driver and officer rear door (ALS doors if equipped) one each side. Exterior handrail to extend 6" lower than standard for 4x4 application. Includes interior rubber grab handles on rear facing wall of driver and officer side wheel well risers.	$580
1675-0116	Brushed stainless steel scuff plates for cab handrails (PR).	$198
1675-0118	Fluid capacity tag to include lug nut torque specs for front and rear wheels in addition to required information.	$102
1675-0123	Chrome fire bell laser etching. Requires design provided in digital format. One side only.	$601
1675-0124	Additional fluid capacity tag in French.	$102
1675-0125	Mounting plate for battery charge receptacle, indicator and air auto eject receptacle - removable brushed stainless steel.	$276
1675-0126	Diamond plate storage box on rear cab roof 70W x 40D x 8.5H with lid.	$1,654
1675-0130	Mounting plate for battery charge receptacle, indicator, air auto eject receptacle and block heater receptacle - removable brushed stainless steel.	$276
1675-0131	Auto Kwikee step. Location: [#LOC].	$799
1675-0133	Rear cab and vista glass (if so equipped) to be dark tint (smoked glass) IPOS. Includes all glass rearward of front cab doors.	$546
1675-0134	Cab wheel well liners. The cab wheel well liners to be aluminum with sanded finish IPO ABS plastic.	$474
1675-0135	Sign plate smooth with sanded finish 20" x 20" mounted on cab roof forward of vista.	$231
1675-0136	Radio box 18W x 14H x 12D. Location: Up high center rear wall panel of vista area recessed on the rear exterior cab wall with door hinged to the bottom. Includes rubber bumpers on upper corners of door.	$487
1675-0138	Cab roof mounted 3 sided roof mounted AC shield with 45 degree front slope painted two-tone job color.	$939
1675-0140	Cab roof mounted diamond plate 3 sided AC shield with 45 degree front slope.	$714
1675-0141	Radio box 32W x 7H x 6D. Location: Centered up high of vista area recessed on the rear exterior cab wall with door hinged to the top. Includes plunger hold open.	$543
1675-0142	Radio box 12W x 8H x 6D. Location: Centered up high of vista area recessed on the rear exterior cab wall with door hinged to the top. Includes plunger hold open.	$487
1675-0143	A diamond plate storage box shall be mounted on top of the cab roof for storage of (1) stokes basket model 71. Stokes basket is 86Lx24Wx8H. Box is to be 26Wx87.5Lx9H in front, box will be sloped to match Vista rise. Box will be opened from the rear. Restraints will be included in the box to secure the basket in place. Box is to be centered side to side.	$1,434
1675-0144	Pair of 24" handrails located just behind driver and officer front door one each side.	$377
1675-0145	Diamond plate cover to protect the air conditioner lines on the cab roof.	$215
1675-0146	Polished stainless steel scuff plates full height on rear cab corners (PR).	$424
1675-0147	Electric chrome fire bell with eagle. Location: Driver's side of front bumper extension. Includes switch on officer side dash.	$1,880
1675-0149	The battery charger receptacle mounting plate shall be fabricated using 3/16" aluminum smooth plate. It shall be painted to match cab two tone job colors and align with the paint break as mounted.	$135
1675-0150	Storage box on back of cab above top mount walkway for backboard/stretcher. Backboard dim is 72Lx27Hx8D; stretcher dim is 65Lx17Hx4D. Box is to be diamond plate 76Lx27Wx8H with a vertically hinged door at each side with a thumb latch in each door. Box to be centered side to side approximately 4" above top mount walkway.	$1,368
1675-0151	Pair of 24" handrails located in the interior of driver and officer rear doors. The handrails shall be mounted on the rear wall. If equipped with an ALS cabinet the handrails shall be mounted on the ALS interior surface, outboard of the ALS access door within easy reach of rear door entry personnel.	$375
1675-0152	Sign plate smooth 40" x 40" mounted on cab roof (vista if equipped). Color: [#COL].	$307
1675-0153	SCBA bottle storage two driver and officer side of cab behind rear door with 3/16" plate doors painted job color.	$1,429

1675-0156	Polished stainless steel scuff plates full height on Quest rear cab corners (PR) to provide protection of painted surface(s) from quartz lighting as well as hose and or equipment as it is being removed from apparatus.	$424
1675-0158	Backboard storage compartment for (1) board. Includes retaining strap for board. Loc: [#LOC].	$671
1675-0159	Mounting plate for battery charge receptacle, indicator and block heater receptacle - removable brushed stainless steel.	$276
1675-0160	Backboard storage compartment for (1) board. Includes (2) hinged doors (1) each side with (2) push button latches for each door. Loc: [#LOC].	$818
1675-0161	Escape hatch located on rear cab roof.	$1,208
1675-0162	Cab roof vent with-out fan (pair). Location: (1) each side offset above driver and officer.	$362
1675-0163	Storage box (additional) to house light tower controls/tether, mounted on the rear of the cab roof offset to the driver side (exterior). The storage box shall be constructed of tread plate, include a drop down door tied into the door ajar circuit and thumb latch(s).	$350
1675-0164	Cab roof mounted painted job color 3 sided light tower shield with 45 degree front slope to match the height of the light tower in the bedded position (+1" -0").	$1,248
1675-0166	Cab roof mounted painted job color 3 sided light tower shield with 45 degree front slope. Located rearward on flat roof (non vista). Placement to allow 45 degree shield to be placed in normal vista rise location to allow cab to appear to have vista roof.	$1,245
1675-0167	Sign plate mounted to the full width front bumper center hose tray lid. Smooth plate painted FLNA4145 Black sized according to space available.	$171
1675-0168	Sign plate smooth 30" x 45" mounted on cab roof (vista if equipped). Color: [#COL].	$307
1675-0169	Door single vertically hinged painted with Tri-Mark latch. Location(s): driver side canopy area of cab.	$895
1675-0170	Embossed diamond plate in place of ALL standard and optioned diamond plate on cab.	$1,404
1675-0171	Cab roof mounted 3 sided dual air condensor shield with 45 degree front slope. The shield shall be constructed using smooth aluminum plate. Finish: Painted to match upper cab.	$919
1675-0173	Radio box 32"W x 7"H x 6"D. Location: Centered up high of vista area recessed on the rear exterior cab wall with door hinged to the bottom. Door to fold down as far as possible to cab.	$543
1675-0174	Hansen green LED cab handrails upgrade (EA).	$189
1675-0181	(1) 48" handrail located just behind rear door (ALS doors if equipped). 3 door custom cabs only.	$227
1675-0182	Mounting plate for battery charger receptacle and indicator - removable polished stainless steel.	$276
1675-0183	Side fixed windows behind rear doors. Windows to be same height as canopy windows. 80" cab with medium doors only.	$308
1675-0184	Chrome fire bell with eagle. Location: Officer's side front cab corner.	$1,445
1675-0185	Two (2) pair of 30" handrails. One (1) pair located just behind driver and officer rear door (ALS doors if equipped) one each side for access of cab rear door each side. The other pair located behind rear doors and rearward of handrails one each side for access to top mount walkway each side.	$742
1675-0186	Sign plate smooth with sanded finish 30" x 30" mounted on cab roof forward of vista. Color: [#COL].	$231
1675-0187	Pair of 24" handrails located just behind driver and officer rear door one each side.	$377
1675-0189	Door single vertically hinged painted with Tri-Mark latch. Location(s): officer side canopy area of cab.	$895
1675-0190	Hard Suction Storage Rack (PR). Driver/officer side cab roof. Includes spring hold downs and scuff plates behind spring mounts (as applicable). Racks installed front to rear between side light bars and light tower.	$735
1675-0191	Sign plate smooth with painted finish 24" x 24" mounted on cab roof forward of vista. Color: [#COL].	$231
1675-0192	Rear cab wall to be smooth 3/16" aluminum plate painted black Durabak. Includes rear facing extrusions.	$696
1675-0193	Polished stainless steel trim belt low on sides of cab. No black trim on upper and lower areas.	$1,625
1675-0195	Body compartment interior painted black Durabak. Only for half height compartments. IIncludes Back, Top, Bottom (unless it is diamond plate) and Side Walls Compartment: [#LOC].	$342
1675-0197	Window cab side fixed officer's above medical cabinet.	$155
1675-0198	Polished stainless steel trim belt low on sides of cab.	$1,625
1675-0200	Hansen blue LED cab handrails upgrade (EA).	$189
1675-0203	Radio box 12W x 8H x 6D. Location: Centered up high of vista area recessed on the rear exterior cab wall with door hinged to the bottom.	$487
1675-0204	The cab roof shall be diamond plate painted black durabak.	$880
1675-0205	Drip pan for a ROM roll-up door (EA). Location(s): driver and officer side ALS door.	$162
1675-0206	Pair of 18" handrails located on ALS doors just behind driver and officer rear door.	$360
1675-0208	Cab exterior hand rails to be Stainless steel knurled grip surface hand rails in place of standard anodized handrails.	$296
1675-0209	Stainless steel full height wrap on rear cab corners (PR). Includes under handrails behind rear cab doors (if equipped). Not available on long or extended cab with medium doors.	$431
1675-0210	Cab roof mounted 3 sided roof mounted AC shield with 45 degree front slope painted job color.	$939
1675-0213	Mounting plate for battery charger receptacle, indicator and air inlet (if applicable). Plate to be removable stainless steel painted job color.	$147
1675-0214	Rubber fenderettes in place of standard fender.	$280
1675-0215	Brushed stainless steel 4" wide scuff plates for cab handrails (PR).	$198
1680-0000	Air intake emergency shut-down. Dash mounted guarded switch.	$1,571
1680-0001	Block heater 1000 watt.	$495
1680-0002	Block heater 1500 watt. Available on ISM, ISX and S60 only.	$506
1680-0005	Thermatic fan clutch.	$1,374
1680-0006	Drivelines 1710.	$1,023
1680-0007	Drivelines 1810. Required on 1550 lb/ft torque or greater engines.	$1,602
1680-0008	Tow eyes front painted below bumper/cab (PR).	$258

1680-0009	Tow eyes front stainless steel below bumper / cab (PR).	$648
1680-0010	Tow eyes front stainless steel mounted in up position. Requires 16" minimum bumper extension on custom chassis and 18" minimum bumper extension on commercial chassis.	$648
1680-0011	Tow eyes rear below body, painted.	$594
1680-0012	Tow eyes rear frame painted.	$528
1680-0013	Tow hooks front stainless steel in down position. Requires extended bumper on commercial chassis. If Non-Extended bumper on Comm. Chassis, tow hooks are to be ordered with chassis.	$775
1680-0014	Tow hooks front stainless steel mounted up. Requires 12" minimum bumper extension on custom and commercial chassis.	$775
1680-0015	Trailer hitch Class III mounted rear.	$945
1680-0016	Exhaust end chrome plated. Due to high heat from current emission exhaust systems, dis-coloring of exhaust end may occur after prolonged use.	$253
1680-0017	Hotshift PTO.	$1,906
1680-0021	Exhaust end for Plymovent. For exhaust extraction system.	$262
1680-0022	Auto lube system Vogel. Chassis points only.	$4,073
1680-0033	Rear Tow Shackles (Pair)	$260
1680-0042	Tow hooks front painted in the down position.	$267
1680-0053	Storage below rear bench seat. (1) hinged door on each side of the bench seat.	$591
1680-0056	Cold weather pkg for cab. Includes (2) 8" fans, fan clutch, additional insulation on the front wall and insulation on rear cab heater hose lines (if equipped).	$3,261
1680-0075	(3) way rear underbody receiver assembly. Includes rearward 9000 lb. winch receiver or Class III trailer receiver and (2) side facing 9000 lb. winch receivers- (1) each below rearward body compartments. Includes rearward tow eyes and electrical winch connections for each receiver.	$2,273
1680-0076	Under front bumper 9K winch receiver. Includes electrical connection for portable winch application. Custom chassis only.	$1,793
1680-0079	Pressure Sensing Governor DDEC Engine - Required with Fire Commander	$1,308
1680-0080	Tow eyes front painted in up and down position. Tow eyes to use same holes for both sets.	$513
1680-0081	Special cover kit for Memphis to include auto lube Vogel driver's side front frame and cannon plug cover	$410
1680-0082	The air intake emergency cable reset. Officer side of cab below the front bumper. Locate so cable is not visible or can be pulled without reaching under the bumper.	$208
1680-0083	Cooler for steering system.	$861
1680-0086	3" tubular protective bar under rear tailboard (width of tailboard) connected to frame to provide protection. Ends of tube to be sealed.	$2,143
1680-0087	Radiator brush guard below cab.	$577
1680-0089	Chassis exhaust to exit to driver side of chassis below the forward body compartment corner.	$1,258
1680-0090	Block heater to have thermostatic controller.	$180
1680-0091	Tow eyes front stainless in up position and painted in down position.	$901
1680-0092	Tow blocks under front bumper extension.	$311
1680-0093	Tow eyes front stainless steel with 3" holes mounted in up position. Requires 16 inminimum bumper extension on custom chassis and 18 in minimum bumper extension on commercial chassis.	$873
1680-0094	Trailer hitch Class IV mounted rear.	$1,725
1680-0095	Side underbody 9K winch receivers. Includes (2) side facing- (1) each below rearward body compartments for portable winch with electrical connection for winch.	$1,515
1680-0096	Side underbody 9K winch receivers. Includes (2) side facing- (1) each below body compartment ahead of the rear wheels for portable winch with electrical connection for winch.	$1,515
1680-0099	Block heater 1500 watt wired through inlet receptacle. Available on ISM, ISX and S60 only.	$506
1680-0116	Oil pan heater. Fleetguard 22MM 150W/120V wired to shoreline.	$470
1680-0117	Special cab tilt reservoir location. Reservoir to be located in the [#LOC].	$595
1680-0118	Cold Weather Pkg for Cab. Includes fan clutch and additional insulation on the front wall and insulation on rear cab heater hose lines (if equipped).	$2,905
1680-0120	Under the body there shall be equipped with a pair of receiver assemblies, each with a removable swivel hoist ring. One each side of apparatus. The receivers shall be square steel tubing, same size as a receiver for a Class III trailer hitch. Located behind the rear axle.	$3,317
1680-0121	Under the body there shall be equipped with a pair of 12,000 lb receiver assemblies, each with a removable swivel hoist ring, or can be used with a Class III trailer hitch. One each side of apparatus. The receivers shall be locate in front of rear axle. Final location will depend on Engineering and driveline. 12v not included.	$3,317
1680-0122	Tow eyes rear below body painted. Eyes to be on edge pointing to rear.	$594
1680-0126	Block heater 1000 watt wired through inlet receptacle (or block heater auto eject inlet receptacle if so equipped).	$495
1680-0127	Block heater thermostat.	$257
1680-0130	High flow power steering pump. Includes additional cooler. Requires engineering evaluation. Not available in hot climates.	$498
1680-0131	Tow eyes rear frame stainless steel.	$1,246
1680-0136	Relocate the air governor to the steering reservoir bracket above the driver side frame rail.	$183
1680-0137	Diesel Exhaust Fluid (DEF) 10 gallon tank. Location: [#LOC].	$1,515
1680-0144	Trailer hitch class V mounted rear. This hitch has under body support as needed.	$2,438
1680-0145	Diesel Exhaust Fluid (DEF) 5 gallon tank. Location: [#LOC].	$1,438
1680-0154	Oil pan heater - Fleetguard 150W/120V wired to block heater receptacle. ISC/ISL only.	$410
1680-0179	Sealant the area between the frame, frame liner, crossmembers and rear axle suspension brackets to prevent buildup of road salt and dirt and corrosion at all bracket to frame rail and frame to frame rail attachment points.	$502

1680-0181	Oil pan heater - Fleetguard 300W/120V wired to block heater receptacle. ISM only.	$520
1680-0187	On-Spot tire chain installation. Requires pre-wire option located in Cab Electrical. Requires engineering review and approval if less than 176" WB.	$2,715
1680-0189	Tow eyes front painted mounted in up position. Requires 16" minimum bumper extension on custom chassis and 18" minimum bumper extension on commercial chassis.	$258
1680-0193	Tow eyes rear below body stainless steel.	$1,964
1680-0194	Tow eyes front stainless steel through bumper / cab (PR).	$897
1680-0196	Tow eyes front painted through bumper / cab (PR).	$503
1680-0217	Driveline guard (EA).	$295
1680-0227	Tow eyes front painted with 3" holes below bumper/cab (PR).	$648
1680-0228	Under front bumper Class III hitch receiver. Custom chassis only.	$1,451
1680-0231	Insta-chain tire chain installation. Requires pre-wire option located in Cab Electrical.	$2,715
1680-0239	Tow eyes rear frame painted mounted low just above tailboard.	$528
1680-0242	Cold weather pkg for cab. Includes additional insulation on the front wall and insulation on rear cab heater hose lines (if equipped).	$3,231
1680-0244	(2) way rear underbody Class III hitch receiver. Includes Class III trailer receivers, (2) side facing- (1) each below rearward body compartments for portable winch receivers with electrical connection for winch.	$1,520
1680-0245	Upgrade receiver and tow eye extension. The front bumper 9K winch receiver shall be extended forward, approximately 1" beyond front bumper IPOS (rather than at the under bumper location). Custom chassis only.	$719
1680-0247	Trailer hitch Class III mounted rear, optmized mounting to be in a raised mounting position.	$945
1680-0249	Driveline guards (as applicable).	$880
1680-0250	Diesel Exhaust Fluid (DEF) 5 gallon tank for 2013 EPA engines. Location: [#LOC].	$1,673
1680-0251	Diesel Exhaust Fluid (DEF) 10 gallon tank for 2013 EPA engines. Location: [#LOC].	$1,749
1680-0253	Fuel tank brush guard.	$674
1680-0254	Officer side rear underbody Class III hitch receiver. Includes Class III trailer receiver, (1) officer side facing side for portable winch receiver with an electrical connection for winch.	$913
1680-0258	Insta-chain tire chain installation. Includes 12 chain sytem. Requires pre-wire option located in Cab Electrical.	$2,834
1680-0271	Tow eyes front painted through bumper / cab (PR). Eyes to be 1" thick material.	$503
1680-0272	Plumb Vogel lube system to On-Spot tire chains.	$193
1680-0273	Additional engine insulation under cab. Includes forward and rearward cab areas. See Engineering for installation instructions.	$1,364
1680-0274	On-Spot tire chain installation. Includes 12 chains per wheel. Requires pre-wire option located in Cab Electrical. Requires engineering review and approval if less than 180" WB.	$2,911
1680-0279	Steel tow bar located below rear compartment mounted to chassis frame for towing purposes only, painted black.	$1,790
1680-0282	Tow eyes rear below body, painted. 1" thick material with 3" diameter hole staight down from chassis frame.	$709
1680-0284	Radiator mounted power steering cooler.	$469
1680-0286	Tow eyes front painted in down position with additional officer only in the up position.	$385
1680-0287	Tow eyes front painted bright silver through bumper / cab (PR).	$503
1680-0288	Oil pan heater for ISL engine. Fleetguard 22MM 150W/120V wired to winterization shoreline receptacle.	$470
1680-0290	Bevel interior holes of front and rear tow eyes.	$52
1680-0291	Tow forks under front bumper extension.	$637
1680-0292	Auto lube system CPL. Chassis points only.	$4,237
1680-0293	Tow hooks front painted in the outboard position.	$267
1680-0295	Trailer hitch Class I receiver mounted rear.	$577
1680-0300	Steel lift bar located below rear compartment mounted to chassis frame for lifting purposes only (no towing), painted black.	$1,790
1680-0301	Cord connector. Daniel Woodhead 3 wire NEMA 5-20 straight blade male located for block heater routed to driver side battery box.	$150
1680-0302	Steel tow/lift bar located below rear compartment mounted to chassis frame, painted black.	$2,858
1680-0306	Air intake emergency shut-down. Pump panel mounted guarded switch with reset switch located below front bumper.	$1,763
1680-0307	4-ply upper and lower radiator hose ipos.	$69
1680-0309	Muncie digital tachometer. Locate display in cab visible to driver.	$663
1680-0311	Fan drive w/thermatic clutch permanently engaged.	$1,374
1685-0001	Cab interior black. Does not include seat color.	$2,816
1685-0002	Cab interior burgundy. Does not include engine cover or seat color.	$2,816
1685-0003	Fold down computer tray bolted to engine cover on officer's side.	$729
1685-0004	Storage below rear bench seat for four SCBA bottles.	$663
1685-0008	Control lanyard Y type for air horns.	$169
1685-0011	Stainless steel pair of window bars for rear cab doors.	$371
1685-0026	Door Seat Riser Ovrlap drv/off for the Typhoon only.	$192
1685-0027	Heater rear cab w/o cover (PR). 23,000 BTU ea.	$1,479
1685-0028	Heaters rear cab w/covers (PR).	$1,579
1685-0038	ALS Prov w/Ext Access Drs	$3,346
1685-0039	Window bars stainless steel pair for canopy windows.	$371
1685-0050	Modify rear bench seat riser to have storage access from each side for (4) SCBA bottles, (2) ea side. Hinge doors as to work best with rear heater locations.	$1,546
1685-0056	Heater rear cab w/o cover (PR) and front cab heater with heat to the feet for the driver and officer.	$1,479

1685-0057	Heaters cab rear with covers (PR), and front heater with heat to the feet for the driver and officer.	$1,579
1685-0058	Interior cab access panel. Driver side of cab for access to rear of shore line receptacle. Panel to be 8" x 8".	$300
1685-0059	Locking seat riser door. Driver and officer seat riser doors are to include a locking push-button latch. Key type to be 1250.	$149
1685-0060	Louvers in rear bench seat riser. For ventilation.	$153
1685-0061	Interior cab access panel. Officer side of cab for access to rear of shore line receptacle. Panel to be 8" x 8".	$300
1685-0062	Label package for Memphis units only, to include labeling of items behind all removable panels and check loose items in cab warning labor for off side dash and cab tilt access door.	$513
1685-0063	Medical glove box. Mount to rear area of engine cover. Includes slotted top for dispensing gloves without opening hinged lid. Box to be same color as interior of cab. Secure lid in closed position with small butterfly latch.	$249
1685-0064	Embossed diamond plate foot plates located at driver, officer and rear facing seat positions where feet would rest while seated.	$278
1685-0066	Officer seat riser storage compartment door to be on front of riser hinged towards engine cover.	$175
1685-0068	Rear engine cover diamond plate trim.	$214
1685-0069	Hinged interior cab gauge panel in front of driver. Includes (9) gauges- English dominant. Panel to be hinged for access to driver gauge cluster.	$2,096
1685-0071	Notch cab wheel well and engine cover to provide 40 inches from rear wall to engine cover	$466
1685-0072	There shall be no E-One logos on cab seats.	$2,025
1685-0074	Communications cabinets (1/8"). 20.5"W x 16"H x 20"D INT (PR). Includes (2) roll out trays and vertically hinged door (1/8") with thumb latch. Location: One each side over cab wheel wells. Includes a smooth plate cover with matching cab finish for customer installed wiring between towers.	$2,565
1685-0075	Removable ABS panel 35"H x 4.5"W for officer side cab wall to route communication wires from officer side communication cabinet to officer side dash area. Panel to be attached with screws.	$110
1685-0078	Kick Plate in front of the officer to be diamond plate.	$142
1685-0079	Tag to indicate Combination Vehicle Weight, Gross Axle Weight, and Gross Vehicle Weight shall be located in the cab.	$45
1685-0080	Embossed diamond plate foot plates located at driver, officer and forward facing rear seat positions where feet would rest while seated.	$347
1685-0084	3/16" Aluminum plate on top engine access door. To have swirl finish and be spaced up approx 1/2".	$249
1685-0085	Center cab dash electrical panel to be held in place with coin slot style fasteners.	$91
1685-0086	Stainless steel scuff plate under interior canopy window.	$330
1685-0087	Rear engine cover radio cabinet. Cabinet to have access from the top and from rear with swirl and clear coat finish.	$1,219
1685-0088	Removable ABS panel 35"H x 4.5"W for driver side cab wall to route communication wires from driver side communication cabinet to driver side dash area. Panel to be attached with screws.	$110
1685-0089	Louvers for officers seat riser. Locate louvers in the front, side and door of riser.	$337
1685-0090	Rear cab headliner to be six pieces IPOS.	$256
1685-0091	Mount customer supplied computer tray on engine cover. Includes support plates on the top and bottom.	$223
1685-0092	Mount (2) intermediate steps to be bolted-on (one each side) inside the front driver and officer cab step well drawing # 672433 and 672434.	$185
1685-0093	Black rubber handrail mounted parallel to seats on rear of engine cover for driver and officer rear facing seats.	$179
1685-0094	Storage below rear bench seat. (1) horizontal hinged door on the front of the rear bench seat.	$427
1685-0095	Locking rear seat riser door (PR). Seat riser doors are to include a locking push-button latch. Key type to be 1250.	$149
1685-0101	Rear engine cover radio cabinet. Cabinet to have access from the top and from rear with OTO finish.	$663
1685-0105	Sun visor strap (PR) with snap fasteners.	$138
1685-0106	Rear engine cover radio cabinet. Cabinet to have access from the top and from rear.	$663
1685-0107	Interior grab handle rubber covered (2). Locate one each side at interior of rear cab door opening (at rear of opening).	$206
1685-0108	Locking seat riser door. Driver and officer seat riser doors are to include a locking push-button latch. Key type to be CH-751.	$78
1685-0109	Locking rear seat riser door (PR). Seat riser doors are to include a locking push-button latch. Key type to be CH-751.	$78
1685-0110	Storage below rear bench seat for two SCBA bottles (one each side).	$663
1685-0111	Rear cab interior wall overlay with swirl and clear coat finish.	$669
1685-0112	Integrated Roll Sensor (IRS) for RollTek air bag system.	$2,149
1685-0113	Integrated roll sensor slave module for RollTek air bag system.	$1,000
1685-0114	Integrated Head Curtain (IHC) for RollTek air bag system.	$604
1685-0115	Integrated Belt Pretensioner (IBP) for RollTek air bag system.	$351
1685-0116	Interior grab handle rubber covered (2). Locate one each side at interior of front cab door opening (at rear of opening).	$206
1685-0117	Rear cab interior wall overlay with Zolatone finish.	$436
1685-0118	Pump operator panel on rear wall of cab. For use with Class 1 TME pump panel. Final design to be determined by E-ONE Applications and Chassis Engineering and with Class 1.	$2,033
1685-0119	3/16" Aluminum plate on top engine cover forward of access door. To have swirl finish and be spaced up approx 1/2".	$249

1685-0120	Rear cab interior wall overlay with diamond plate finish.	$548
1685-0121	Flat bar (.5" x 2") installed on rear cab wall up high with full length shelf track.	$307
1685-0126	SCBA Storage tubes (4) horizontally mtd (2) each side in lower rear cab compartments above floor level.	$774
1685-0127	Locate rear cab heaters below front of rear wall seat riser(s). Includes louvers for ventilation.	$362
1685-0131	Reinforcement plate(s) behind lower rear cab wall padding. TME only.	$571
1685-0134	Embossed diamond plate foot plates located at each seating position where feet would rest while seated.	$278
1685-0135	Hot climate insulation package. Includes insulation for ceiling, front wall, rear wall, side walls, below seat risers, and in doors.	$2,270
1685-0136	Storage in rear wall free standing seat riser. (1) horizontal hinged door on the front of the free standing seat riser.	$331
1685-0137	Console Remote Control Panel between Driver and Officer for remote control Bumper Turret, Pump Control, and switchs.	$833
1685-0138	3/16" Aluminum plate on top engine cover forward of access door. Finish to match cab interior and be spaced up approx 1/2".	$249
1685-0139	3/16" Aluminum plate on top engine access door. Finish to match cab interior and be spaced up approx 1/2".	$249
1685-0140	Storage at rear engine cover w/ cargo net top. (3) sided storage approx. 44.5"W x flush with upper engine cover high x sloped area of engine cover deep. Storage area to match cab interior.	$726
1685-0146	Extended electrical access panel in cab. Panel to extend up to allow for radio/equipment installation.	$572
1685-0147	Narrow rear cab wall support channel. Not available with rear wall seating.	$212
1685-0153	Storage below rear bench seat. (2) horizontally hinged doors on the front of the rear bench seat.	$852
1685-0154	Communications cabinets (1/8"). 20.5"W x 16"H x 20"D INT (PR). Includes (2) roll out trays and cargo netting over openings. Location: One each side over cab wheel wells. Includes a smooth plate cover with matching cab finish for customer installed wiring between towers.	$2,565
1685-0155	Cold climate insulation package. Includes insulation for ceiling, front wall, rear wall, side walls, below seat risers, and in doors.	$2,270
1685-0156	Command desk, rear engine cover 5"H x 17"D x full width between medical cabinets. Desk to include hinged aluminum lid with lexan overlay and gas shock, trigger latches, 1" return lip on lid and 1" back splash. Desk to be mounted 26" off of floor with finish to match cab interior.	$2,151
1685-0157	Dash label "Switch Compression Brake Off for Wet or Slippery Road Conditions".	$47
1685-0161	Severe duty dash package. Includes smooth plate alum center and officer side dash painted to match cab interior and lower dia plt kick panels.	$915
1685-0162	Severe duty engine cover. Includes floor type matting on sides, top forward and top rearward engine covers with sanded finish smooth aluminum trim.	$991
1685-0164	Severe duty engine cover. Includes floor type matting on sides, top forward and top rearward engine covers with smooth aluminum trim painted to match cab interior.	$1,164
1685-0165	Storage below rear bench seat. (1) horizontally hinged door on the front of the rear bench seat. Hinge hardware mounted with acorn nuts outside.	$427
1685-0172	Storage below rear bench seat. (1) hinged door on each front corner of the bench seat base.	$814
1685-0174	Louvers for rear bench seat riser. Locate louvers on each side of riser.	$337
1685-0179	Locate rear cab heaters below top mount pump panel on rear cab wall. Includes louvers as applicable.	$362
1685-0180	On Scene Solutions Talon helmet holder (EA). Location: [#LOC].	$388
1685-0181	Pump operator panel on rear wall of cab. For use with TME pump panel. Final design to be determined by E-ONE Applications and Chassis Engineering	$2,033
1685-0182	Severe duty dash package. Includes smooth plate alum center, officer side dash and lower kick panels; all painted to match cab interior.	$915
1685-0183	Heater cab with heat to the feet for the driver and officer	$772
1685-0184	Heater rear cab w/o cover. Includes 110V blower.	$1,228
1685-0185	Locking rear seat riser door. Seat riser door to include a locking push-button latch. Key type to be 1250.	$149
1685-0188	Stainless steel trim low on officer side of engine cover (to match driver side). CII / Typhoon only.	$127
1685-0189	Identification plate GSA units. Located on inside of driver's door. Exact information and wording to be determined at time of final inspection. See specification.	$271
1685-0191	Diamond plate cover for battery charger/air compressor. Includes louvers for ventilation.	$217
1685-0192	PAC TRAC panels vertical stacked on back wall of cab each side outboard of bench seat.	$1,416
1685-0193	Slide-out MDT mount officer cab dash. Requires severe duty dash w/MDT notch.	$1,037
1685-0194	Officer cab dash modification for Havis slideout MDT bracket. Not available with heat to feet or side roll protection.	$448
1685-0196	Severe duty Quest officer dash package. Includes smooth plate alum officer side dash with trim panel painted to match cab interior and lower dia plt kick panel.	$382
1685-0197	Rear upper cab interior wall 3/16" overlay with Zolatone finish. Approximately 20" high.	$349
1685-0199	Rear engine cover brushed stainless steel trim.	$451
1685-0201	Severe duty dash package. Includes smooth plate alum center and officer side dash painted to match cab interior and lower dia. plt. kick panels. Officer cab dash notched for MDT slide-out bracket(s).	$1,115
1685-0204	Side mount telescopic computer tray bolted to engine cover on officer's side.	$902
1685-0205	Storage at rear engine cover w/ drop down rear door. (3) sided storage approx. 44.5"W x flush with upper engine cover high x sloped area of engine cover deep with (2) equally spaced vertical dividers. Storage area to match cab interior.	$726

1685-0207	Cup holders; severe duty dash. (1) each side facing of center electrical cover; driver offset rearward, officer offset forward. Holders to match cab interior.	$224
1685-0219	Interior grab handle rubber covered (2). Locate one each side at interior of rear cab door opening (at front of opening).	$206
1685-0221	Severe duty dash package. Includes smooth plate alum center and officer side dash painted to match cab interior and lower dia plt kick panels. Officer cab dash notched with recessed glove box. Includes angled notepad holder on top. Not available with Rolltek.	$1,346
1685-0222	Storage at lower rear engine cover w/ cargo net top. Approx. 30"W x 12"H x sloped area of engine cover deep. Storage area to match cab interior.	$726
1685-0223	Storage at rear engine cover w/ lift-up door. Storage approx. 44.5"W x flush with upper engine cover high x sloped area of engine cover deep. Storage area to match cab interior.	$726
1685-0224	[#COL] vinyl cover for steering wheel shaft at driver's position.	$49
1685-0225	Storage at rear engine cover w/ lift-up door. Storage approx. 37.5"W x flush with upper engine access cover high x 34" deep (front to rear). Includes forward 12" stationary cover. Storage area to match cab interior.	$1,006
1685-0234	Cup holders; severe duty dash. (1) each side of forward engine cover. Holders to match cab interior.	$224
1685-0235	Foot switch Linemaster model 632S to control air horns located [#LOC]. Includes 25 degree diamond plate bracket.	$114
1685-0238	Insulation - front cab wall. Includes insulation on rear cab heater hose lines (if equipped).	$102
1685-0239	Cab floor to be overlayed with 1/8" embossed aluminum diamond plate; front and rear. Single piece with no gaps around perimeter.	$907
1685-0240	Slide-out MDT mount officer cab dash with dock. Requires severe duty dash w/MDT notch. Not available with heat to the feet.	$1,422
1685-0242	Officer seat riser storage compartment door to be hinged to the rear.	$106
1685-0243	Pac Trac panels vertically stacked on back wall of cab each side outboard of medical cabinet.	$1,416
1685-0244	Mechanical fastners ipos for headliners.	$180
1685-0247	Cab floor to be overlayed with 1/8" embossed diamond plate; front and rear. Single piece with no gaps around perimeter. Front plates to be sand blasted to remove shine.	$1,083
1685-0248	Storage box with diamond plate hinged top with push-button latch. Box to be mounted on floor centered of rear wall. Size: 36H x 40W x 20D. Finish to match can interior (excluding lid). Includes compt light to match body package.	$1,379
1685-0251	Diamond plate cover to protect the steering wheel shaft/knuckle.	$211
1685-0254	Storage box locking, mounted on the rear lower engine cover. Engine cover lock box measures 18x24x9 with a lift top lid and a locking latch. Finish will match cab interior.	$827
1685-0258	SCBA rear wall peg tool board mount for three (3) Lifeguard Smart Dock 2 SCBA brackets. The "peg board" SCBA tool board shall be mounted between the two (2) rear outboard seats with adequate room between each pack to mount complete SCBA packs. Peg board sizing shall be approximately 40" wide X 35" high and shall be spaced off the rear wall approximately 1". The peg board shall be finished with Zolotone.	$2,455
1685-0261	Storage below rear bench seat. (1) cargo net (black) on each side of the bench seat to gain access to storage area.	$591
1685-0262	Storage below rear bench seat for two SCBA bottles (driver side). Officer side to be open storage w/ door.	$663
1685-0263	Severe duty dash package. Includes smooth plate alum center and officer side dash and lower kick panels; all painted to match cab interior. Officer cab dash notched for MDT slideout bracket(s).	$1,115
1685-0265	Smooth plate cover(s) for battery charger and air compressor. These cover's shall be painted to match cab interior and shall include louvers as required for ventilation.	$217
1685-0266	Bolt-in partition wall. Locate under bench seat centered between driver and officer side.	$215
1685-0267	Modify rear bench seat riser to have storage access from each side for up to (2) 20lb ABC extinguishers, (1) ea side.	$1,340
1685-0269	Storage box approximately 11" wide x 10" high x 26" deep made from 1/8" diamond plate aluminum, centered on to rear cab floor. The box shall cradle (1) 2.5 gallon water fire extinguisher. The door shall be hinged with push button latches to provide easy access to the extinguisher in its stowed position stored at a slight incline within the box.	$637
1685-0271	Embossed diamond plate foot plates painted with black Durabak located at each seating position where feet would rest while seated.	$391
1685-0272	Cup holder (PR) with shallow tray located at front center of engine cover. Polyurethane construction for use with severe duty engine cover only.	$116
1685-0273	KNOX-BOX MedVault 2 model 5520H3S2-4. Includes E-ONE installed wiring to battery hot. Location: rear wall of medical cabinet. Top of compartment right hand side forward facing. Requires dept to purchase software package from KNOX-BOX (if they do not already have it).	$2,573
1685-0274	Plate aluminum 1/8" outboard of medical cabinet rear wall between extrusions behind padding. Plate to run from ceiling down to rear cab support bracket.	$211
1685-0275	Cup holder (PR). Polyurethane construction for use in Typhoon and CII with severe duty engine cover only. Location: [#LOC].	$141
1685-0279	Chrome grab handle. Locate (1) on the engine cover centered between latches.	$110
1685-0281	Control lanyard type officer side only for air horns.	$169
1685-0282	Slideout MDT mount officer cab dash with dock (Havis DS-PAN-111, C-MD-105-Z, C-HDM-135). Requires severe duty dash w/ MDT notch. Not available with heat to the feet. To include 12 VDC electrical outlet wired to battery hot.	$1,803
1685-0283	Pac Trac panels vertically stacked on back wall of cab.	$1,416
1685-0284	Raceway across lower engine cover; full width of cover. Painted to match cab interior.	$209

1685-0285	Cup holder / tray for engine cover painted to match cab interior. Approx 14" wide x 10" long with tapered front corners and cup holders at each rear corner. For use in Typhoon and CII with severe duty engine cover.	$396
1685-0286	Control lanyard Y type for air horns. Aircraft style cable (1/8" wire cable covered with clear plastic/nylon tubing) shall be used IPOS.	$219
1685-0287	Rear engine cover trim 1/8" smooth aluminum painted to match cab interior and spaced up 1/2". Includes both horizontal surfaces and angle vertical surface between horizontal surfaces.	$451
1685-0288	Command desk in cab. Desk will be sized per rear engine cover area. Includes a raceway on the back side of the desk with a removable plate for access to interior of race way and a pull out drawer. All items are to have a DA finish.	$2,389
1685-0289	Foot switch Linemaster model 632S to control Q2B siren located [#LOC]. Includes 25 degree diamond plate bracket.	$114
1685-0290	Pac Trac panels vertically stacked on back wall of cab between forward facing outboard seats.	$1,416
1685-0291	4Front air bag system with steering wheel bag, driver knee bag and officer knee bag. Requires RollTek option.	$4,282
1685-0292	Mount for bumper turret joystick to allow use by driver or officer. Locate on forward engine cover.	$332
1685-0295	The rear wall support channel shall not include pre-punched holes for optional seating not contained within this order.	$52
1685-0296	Severe duty dash package. The officer side dash shall be lowered 2.5" below its standard height. Includes smooth plate alum center and officer side dash painted to match cab interior and lower dia. plt. kick panels. Officer cab dash notched for MDT slide-out bracket(s). The notch position shall not be modified (only the officer side dash top). Not available with heat to the feet.	$1,265
1685-0297	Storage at rear engine cover w/ lift-up door. Storage approx. 36"W x flush with upper engine cover high x sloped area of engine cover deep. Storage area to match cab interior.	$690
1685-0298	The cab floor shall have the pre-punched holes for the accelerator and brake pedals modified. All brake and accelerator pedal hole cutout(s) necessary shall not be visible after the pedals have been mounted in place.	$102
1685-0300	Hook(s), stainless steel shall be provided in the cab. Location: within easy reach of the driver's seated position.	$70
1685-0301	Access below top mount enclosed pump panel on rear wall of cab for access to pump compartment.	$306
1685-0302	Insulation - front pump compartment access door.	$102
1685-0307	Cup holder / tray enlarged for engine cover painted to match cab interior. Approx 19" wide x 12" long with tapered front corners and cup holders at each rear corner. For use in Typhoon and CII with severe duty engine cover.	$427
1685-0308	Riser rear bench seat with provisions for rear wall heaters (if equipped). For use with flip-up seats.	$1,392
1685-0311	Adjustable throttle and brake pedals. Includes sw accessible by driver.	$1,040
1685-0312	Locking thumb latch on DEF tank door ipos.	$66
1685-0313	Smooth plate cover for battery charger. Includes louvers for ventilation. Cover to match cab interior.	$217
1685-0314	Officer wheel well cabinet (1/8"). 20.5"W x 14"H x 20"D INT. Includes (1) roll out tray with 8" sides. Rear opening will have cargo netting. Includes 1" lip around perimeter of top.	$1,275
1685-0315	Storage below rear bench seat. (1) hinged door on each side of the bench seat. The hinge shall be mounted on the forward edge of the opening each side.	$591
1685-0318	Rear lower engine cover mounted storage box. To be approx. 44" W x 8" H x 12" D. Includes (1) centered (front to rear) divider. Includes cargo net cover.	$931
1685-0320	Storage at rear engine cover w/ cargo net top. (4) sided storage approx. 44.5"W x 3" upper (13" lower) deep x 21" front to rear. ISX engines only. Storage area to match cab interior.	$726
1685-0321	Divider below rear bench seat (PR). Requires side access doors. Location: (1) each side of front access door.	$340
1685-0322	Storage at lower rear engine cover w/ cargo net top. Approx. 30"W x 8"H x 12" deep with a center divider (front to rear). Storage area to match cab interior.	$726
1685-0324	Storage at lower rear engine cover w/ lift up door and dividers for 3" binders. Approx. 24"W x 14"H x 12"D. Storage area to match cab interior.	$726
1685-0326	Edge trim on top perimeter of map pockets.	$52
1685-0329	Map pockets aluminum plate painted to match cab interior (PR). Includes vinyl trim around top of opening and nylon strap with snap to retain contents. Locate pockets one each side on front wall of rear access map box between driver and officer.	$401
1685-0330	Pac Trac panels vertical stacked on back wall of cab officer side outboard of seat(s).	$709
1685-0331	Rear engine cover radio cabinet. 8"H x 44"W x 12"D (lower); ISC/ISL engines only. Includes lift-up door with gas shock, locking thumb latches and louvers. Finish to match cab interior.	$663
1685-0332	Interior access panel of cab roof antenna. Location: driver side forward, officer side forward and officer side rearward.	$147
1685-0333	3/16" aluminum plate on top engine cover forward of access door approx. 32"W x 12.5"L. Finish to black Durabak and be spaced up approx 1-1/4". Not available with cup holders.	$268
1685-0334	VIN, Tire size, Paint Color and Vehicle Emissions tags to be metal engraved fastened in place with stainless steel hardware.	$649
1685-0335	Rear engine cover swirl smooth plate (not clear coat) trim spaced 2" off cover. Includes lower horizontal surface and angle vertical surface between horizontal surfaces.	$537
1685-0336	Storage below rear bench seat for two SCBA bottles (officer side). Driver side to be open storage w/ door.	$663
1685-0337	Riser rear seat(s) with transverse. For use with side access ALS and flip-up ABTS seats. Transverse to be used for backboard storage.	$1,392

1685-0338	Severe duty dash package with low profile center and officer side dash. Includes smooth plate alum center and officer side dash painted to match cab interior and lower dia plt kick panels.	$1,061
1685-0339	Lower exterior cab steps to be equipped with Bustin Industries Type M stainless steel overlay in lieu of Gator Grip. Includes (6) 3/4" drain holes on the lower steps.	$973
1685-0341	Diamond plate power strip cover (ea).	$147
1685-0343	Storage at lower rear engine cover w/ cargo net top. Approx. 44"W x 8"H x 12" deep with (2) dividers (front to rear). Storage area to match cab interior.	$726
1685-0346	Storage cabinet mounted on the officer wheel well offset forward toward officer seat 15.5X24X21. Includes rear facing cargo netting.	$986
1685-0347	Bolt-in partition wall. Locate rear of driver seat approx. 21"W x 24"H.	$215
1685-0349	PAC TRAC panels vertically stacked each side backwall of outboard medical cabinets.	$995
1685-0350	Diamond plate storage at rear engine cover w/ drop down rear door. Approx. 41"W x flush with upper engine cover high x sloped area of engine cover deep.	$726
1685-0353	Divider below rear bench seat; adjustable. Requires side access doors.	$340
1685-0355	Storage below rear bench seat. (1) cargo net (black) on each side of the bench seat to gain access to storage area. Includes snaps on top and bungee cord on bottom	$591
1685-0356	Writing surface cab dash finished same as cab interior. Location: Mount at final inspection.	$201
1685-0357	Rear cab interior wall overlay plates with Zolatone finish each side outboard of rear seating. Approx. 15"W x 32"H.	$279
1685-0358	Storage at lower rear engine cover w/ lift-up door (ISL only). Storage approx. 44.5"W x 15"H x 12"D. Storage area to match cab interior.	$726
1685-0361	Interior access panel of cab roof antenna. Location: driver side forward, driver side rearward, officer side forward and officer side rearward.	$147
1685-0362	Cab floor overlays. Front and rear cab floors to be overlayed with diamond plate painted with black Durabak. Single piece with no gaps around perimeter.	$1,207
1685-0363	Locking seat riser door. Officer seat riser door is to include a Simplex model 9672C-20-260-41 combination lock with satin chrome finish and black trim ring. Not available with air or electric seats.	$353
1685-0364	Recessed access panel in MDT notch on officer side cab dash. Approx. 8" x 8".	$201
1685-0365	Air ride seat pull down (S4) for RollTek air bag system.	$935
1685-0366	Side Rollover Airbag (SRA) for RollTek air bag system.	$604
1685-0367	Diamond plate tray rear engine cover. Approximately 43"W x 7.5"D x 2.5"H. Included strap over center of tray.	$389
1685-0368	Pair of 36" handrails located inside driver and officer rear door on rear interior wall. Not available with outboard rear wall seats.	$391
1685-0369	Severe duty dash package with low profile officer side dash. Includes smooth plate alum center and officer side dash and lower kick panels; all painted to match cab interior.	$1,115
1685-0370	Bolt-in partition wall. Locate under bench seat side to side at pass-thru area of riser height compartments.	$215
1685-0371	Overhead console flange re-inforcement. Includes driver and officer side consoles.	$102
1685-0373	Transverse riser height area for use with exterior riser height compartments and fold down/flip up seats (if equipped).	$377
1685-0374	Stack-On model PS-514-12 gun safe. Location: centered on top of rear wall medical cabinet.	$304
1685-0377	Fixed back wall mounted swirled overlay. Overlay to be spaced off wall approx. half inch. Location(s): center rear wall of cab full height above seat support channel x engine cover width.	$257
1685-0379	Officer overhead panel painted FLNA4006 white.	$183
1685-0380	Storage above rear wall medical cabinet w/ cargo net sides. Approx. 32"W x 22"H x 24" deep. Storage area to match cab interior.	$726
1685-0381	1/8" aluminum plate on top engine cover forward of access door approx. 32"W x 12.5"L. with 1" lips around perimeter. Finish to match cab interior and be spaced up approx 1". Not available with cup holders.	$423
1685-0382	PAC TRAC panels vertically stacked each side backwall of outboard of fold down seats.	$995
1685-0383	Upper vista wedge on driver side wheel well medical cabinet. Includes rear facing cutout 9.5H x 12.5W centered approx 1.25" up from bottom. Wedge to match cab interior.	$496
1700-0001	Alternators Leece Neville dual 270 amp. 480 amp NFPA/540 amp SAE rating. Available only on ISX12 and Detroit EGR Series 60 engines.	$3,700
1700-0003	Alternator Leece Neville 270 amp SAE, 240 amp NFPA rating.	$1,944
1700-0005	Alternator Leece Neville 320 amp. 320 amp SAE/275 amp NFPA.	$3,144
1700-0008	Alternator Leece Neville dual 320 amp. 560 amp NFPA/540 amp SAE rating. Available only on ISX12 and Detroit EGR Series 60 engines.	$5,087
1700-0010	Noise filter for Leece Neville alternator.	$206
1700-0012	Alternator Niehoff 430 amp (430 Amp SAE/380 NFPA rating). Available on Cummins ISX12 only.	$4,341
1700-0017	Noise filter for Neihoff alternator.	$209
1700-0018	Alternator Delco Remy 300 amp. 300 amp SAE/264 amp NFPA.	$3,082
1700-0019	Alternator Niehoff 360 amp (360 amp SAE/320 NFPA rating). Available only on ISX12 and ISX15.	$3,147
1700-0021	Alternator Niehoff 360 amp (360 amp SAE/320 NFPA rating). Available only on ISL.	$3,147
1750-0000	Ammeter gauge in cab 0-300 amps.	$308
1750-0001	Dome lights clear large one for each cab door.	$137
1750-0002	Dome lights red large one driver side one officer side	$137
1750-0004	Dome lights red large one driver side one officer side rear of cab	$137
1750-0006	Map light flexible arm. Located [#LOC].	$192
1750-0008	Radio AM/FM cassette with weather band located [#LOC]	$506
1750-0009	Radio AM/FM CD with weather band located [#LOC].	$775
1750-0010	Radio speakers additional pair. Locate each side rear cab ceiling.	$261

1750-0011	Speedometer officer's side overhead.	$298
1750-0012	Swivel reading lamps (PR) overhead between driver and officer. Lights to be individually switched.	$104
1750-0013	Turn signal Whelen 600 LED amber arrow pair located [#LOC].	$616
1750-0015	Windshield fans 8" pair. Location: [#LOC].	$359
1750-0016	Pump hourmeter in cab.	$130
1750-0019	Battery charger Super Smart 110 volt, 20 amp.	$401
1750-0021	Battery charger Kussmaul model 1200, 40 amp.	$674
1750-0022	Battery charger Kussmaul 40 amp model 1200 with air compressor.	$2,273
1750-0024	Auto-Eject receptacle inlet 20 amp located [#LOC] with a [#COL] cover.	$548
1750-0025	Super Auto-Eject receptacle inlet 30 amp 120 volt located [#LOC] and with a [#COL] cover.	$801
1750-0026	Clamshell controller mounted on officer's side of engine cover for the air horns.	$119
1750-0027	Control push-button switch officer dash for Q2B siren.	$91
1750-0029	Switch horn button two position DOT/air horn.	$95
1750-0030	Switch horn button two position DOT/electronic siren.	$95
1750-0031	Switch horn button two position DOT/Q2B.	$95
1750-0032	Switch horn button three position DOT/air horn/electronic siren.	$193
1750-0033	Switch horn button three position DOT/air horn/Q2B.	$193
1750-0034	Switch, additional 12 volt/15 amp. Location and function: [#LOC].	$193
1750-0035	Cornering light relay circuits for lights on sides of cab and / or bumper. Includes (2) relays. Requires scene light option. Interlocked with park brake.	$394
1750-0039	Mrkr Pkg Chas LEDTrklt-Pmp/Res	$528
1750-0040	Battery charger Super Smart 220 volt 50 Hz, 20 amp.	$401
1750-0042	Horn button selector switch, 3-position DOT/ES/Q2B.	$193
1750-0047	The chassis shall be pre-wired for installation of tire chains.	$407
1750-0048	Round clear incandescent light mounted in the [#LOC] door.	$34
1750-0049	Round red incandescent light mounted in the [#LOC] door.	$34
1750-0050	Round amber incandescent light mounted in the [#LOC] door.	$34
1750-0052	Round clear LED light mounted in the [#LOC] door.	$156
1750-0053	Round red LED light mounted in the [#LOC] door.	$59
1750-0054	Round amber LED light mounted in the [#LOC] door.	$59
1750-0059	Receptacle inlet 20 amp with a [#COL] cover. Location: [#LOC].	$277
1750-0060	Auto transfer switch 120 volt. Includes 8 place breaker box. Allows interior receptacles to be powered by either shore power or generator.	$728
1750-0061	Control push-button switch officer dash for air horns.	$91
1750-0062	Control push-button switch officer dash for siren.	$91
1750-0063	Clamshell controller mounted on officer's side of engine cover for Q2B.	$119
1750-0064	Clamshell controller mounted on on officer's side of engine cover for electronic siren.	$119
1750-0065	Turn signal Whelen 600 halogen amber pair located [#LOC].	$272
1750-0066	Halogen front turn signal amber (PR). Locate: [#LOC].	$262
1750-0067	Additional 4" red LED dome lights (PR) for driver and officer.	$272
1750-0068	Additional 4" red incandescent dome lights (PR) for rear of cab.	$254
1750-0069	Additional 4" red incandescent dome lights (PR) for driver and officer.	$207
1750-0070	Additional 4" red LED dome lights (PR) for rear of cab.	$272
1750-0071	Mount customer supplied antenna on cab roof. Location: [#LOC].	$167
1750-0072	12 VDC (or 24VDC) electrical outlet in the cab wired battery hot. Location: [#LOC].	$58
1750-0073	Antenna base Tessco P/N 90942 (NMO Motorola Style - also called MATM style) on cab roof. Location: [#LOC].	$90
1750-0074	Interlock to position front intake for cab tilting.	$265
1750-0075	English dominant main cab gauge cluster.	$1,946
1750-0076	Metric dominant main cab gauge cluster.	$2,060
1750-0077	Turn signal Code 3 model 65 LED amber with arrow insert (PR). Location: [#LOC].	$689
1750-0078	Light Whelen model PSR00FRR LED (4) red. Horizontal mounted flashing strip light on each of the inside lower cab door panels. Wire through door switch.	$756
1750-0079	Fuel gauge for officer.	$240
1750-0080	Conduit flexible 1.5" for radio installation center of dash to compartment under officer's seat.	$289
1750-0081	Conduit flexible 1.5" for radio installation compartment under officer's seat to pump panel.	$254
1750-0082	12V power distribution module. Includes (6) battery hot and (6) switched hot circuits. 100 amps max (IATS). Location: [#LOC].	$298
1750-0083	Turn signal Federal Signal QuadraFlare QL64Z-ARROW LED amber pair located [#LOC].	$262
1750-0084	Receptacle inlet 220 volt European "Schuko" style. Includes matching cord connector. Location: [#LOC]	$395
1750-0088	Whelen 500 LED red door ajar light. Model 50R00FRR light with 5FLANGEC flange.	$180
1750-0091	Battery Saver Kussmaul model 091-195-12 wired to battery charger receptacle.	$666
1750-0095	Second DOT traffic horn	$128
1750-0096	Bracket for Motorola Spectra Radio in the center overhead console offset to officer side. Dim: 7"W x 2"H, must be size of the opening after break.	$78
1750-0097	LED Light in cab to Illuminate Pump Shifter and shall activate with the headlights.	$48
1750-0098	Dome Lts Red/White Weldon with Euro style switches. Package includes two lights mounted in the front and two mounted in the rear of the cab. White light wired through master battery switch, door ajar and light assembly mounted switch. Red light through light assembly mounted switch.	$536
1750-0108	Seat belt detection system programmed to 2" red door ajar light and ES-Key display. Also tied to a "different sounding alarm".	$584
1750-0110	Battery Charger Professional Mariner. Located outside driver side door area. The charger to be mounted behind driver's seat on front face of communication box, next to EQ2B amplifier.	$1,068

1750-0111	Digital voltmeter in cab. Location: Driver side overhead console.	$326
1750-0113	Dome Lts Red/White Incandescent. Package includes two lights mounted in the front of the cab. White light wire through door and light assembly mounted switch. Red light through light assembly mounted switch.	$269
1750-0114	Cab Headlights in addition to front quad headlights	$411
1750-0115	Master warning light switch to have a red cover (or bezel).	$37
1750-0117	Auto eject receptacle inlet 15 amp 240 volt with a [#COL] cover. Location: [#LOC].	$501
1750-0118	Flexible 2" conduit with connectors. Location: Officer cab dash to bottom of medical cabinet.	$352
1750-0119	Flexible 2" conduit with connectors. Location: Center cab dash to rear bench seat riser.	$306
1750-0121	Ammeter gauge in cab 0-400amp Cruz Pro digital.	$461
1750-0122	Additional dome lts red/white 4" LED (PR) located one each side over enclosed TM pump panel. White light wired through door and light assembly mounted rocker switch. Red light through light assembly mounted rocker switch.	$725
1750-0123	Auto eject receptacle inlet 15amp location or function [#LOC] and the color shall be [#COL].	$498
1750-0124	Whelen 4" round LED red door ajar light. Model 20R00FCR light with 2FLANGEC bezel.	$180
1750-0125	Block heater receptacle 15 amp with a [#COL] cover. Location [#LOC].	$277
1750-0126	Conduit flexible 1.5" for radio installation center of dash to area behind officer's seat.	$289
1750-0129	Door ajar alarm to be a chime versus an alarm.	$208
1750-0130	Xantrex Truecharge 40+. Wire to autoeject receptacles.	$1,630
1750-0131	Pyrometer gauge in cab.	$547
1750-0132	Auto transfer switch for additional battery charge receptacle.	$440
1750-0133	Conduit flexible 1.5" for radio installation center of dash to rear bench seat.	$289
1750-0134	Conduit flexible 1.5" for radio installation rear bench seat to pump panel.	$442
1750-0135	35 AMP inline fuse as hot lead for radio installation. Radio circuit with G30060-1CR in-line fuse 35 amp. Fuse wired to ignition side to power the radio head. To be labeled and identified as "HOT". In-line fuse to be clearly labeled. Wiring located behind a face plate in the center overhead also provide ground wire and label wires. Label ground "Chassis Ground". Run speaker wires from center overhead to above the medical cabinets on each side leave 36" of coiled wire.	$541
1750-0137	Kwik Eject auto eject receptacle inlet 20amp located [#LOC] with a yellow cover. (Obsolete from vendor)	$594
1750-0138	Work lights to be programmed "on" when park brake is set and switched in overhead console.	$119
1750-0140	Mount customer supplied antenna(s) on cab roof. Location(s): (1) each side of A/C condensor and (1) GPS antenna located top of vista officer side front corner. Includes coaxial cable terminating in the rear bench seat riser.	$167
1750-0142	Kussmual Auto-Eject 20 on each side of charger with a Red cover. Auto-eject on each side of cab to alow plug in on either side for battery charger with transfer switch in cab.	$1,436
1750-0144	Q2B brake switch to have a red cover (or bezel).	$37
1750-0145	Relocate the battery charger and (if applicable) air compressor to below the rear wall bench seat or rear center wall medical cabinet (if equipped).	$531
1750-0148	Turn signal Whelen 700 LED Chevron amber (PR). Locate [#LOC].	$645
1750-0149	Control push-button switch on officer's dash for Q2B siren brake.	$91
1750-0150	Block heater receptacle 20 amp Auto-Eject with a [#COL] cover. Location [#LOC].	$548
1750-0151	Receptacle inlet 15amp with a [#COL] cover. Location: [#LOC]	$277
1750-0154	Cab keyless entry touch pad(s) to lock/unlock all cab doors and cab/body electric locking roll-up door(s).	$556
1750-0155	Secondary keyless entry touch pad on officer side of cab. Pad to include any and all functions provided by the driver side pad.	$451
1750-0158	Dome Lts Red/White LED. Package includes two lights mounted in the front and two mounted in the rear of the cab. White light wired through door and light assembly switch. Red light through light assembly switch.	$775
1750-0159	3 Position Q2B momentary switch (activate/off/brake). Loc: [#LOC].	$193
1750-0160	Dome Lts Red/White Incandescent. Package includes two lights mounted in the front and two mounted in the rear of the cab. Front cab lights: White light wired through door and light assembly mounted switch. Red light through light assembly mounted switch. Rear cab lights: White light wired through door and switch on side cab interior wall. Red light through switch on side cab interior wall. Rear dome switches to be located between side window and door opening and control light on respective side of cab.	$917
1750-0161	Air compressor, Kussmaul model 091-9B-1, 120V.	$938
1750-0162	Battery charger Kussmaul model 091-35/10, 35 amp battery charger / 10 amp battery saver.	$787
1750-0163	Speedometer officer's side switch panel.	$298
1750-0164	Fuel gauge for officer. Location: officer switch panel.	$240
1750-0165	Conduit flexible 1.5" for radio installation center of dash to compartment under driver's seat.	$289
1750-0166	ATC override switch.	$193
1750-0167	Block heater to be wired to battery charger receptacle with a lighted on/off switch behind driver seat.	$192
1750-0168	Dome Lts Red/White 4" incandescent (5). Lights to be located two front and three rear. White light wired through door and light assembly mounted rocker switch. Red light through light assembly mounted rocker switch.	$698
1750-0169	Radio speakers (3). Locate officer ceiling and each side rear cab ceiling. Wiring to terminate in officer side overhead console for customer supplied radio(s).	$449
1750-0171	Clamshell controller mounted on on driver's side of engine cover for Q2B.	$119
1750-0172	Special battery charger and air compressor location. Charger and air compressor to be located [#LOC].	$266
1750-0173	Rocker switch cover (or bezel) to be red. Location: [#LOC].	$37

1750-0176	Light Whelen model 70RA6FCR Super LED (4) split red/amber with chrome flanges. Horizontally mounted flashing lights on each of the interior cab door panels outboard mounted. Wire through door switch.	$1,543
1750-0177	Receptacle inlet 30amp twist lock with a [#COL] cover. Location: [#LOC].	$531
1750-0178	Windshield fan 8". Location: rear facing mounted on driver side 3x3 post.	$181
1750-0185	Vernier engine throttle in cab for use with jet dump operations. Locate in driver side overhead console or Lower Dash. Includes selector sw also in overhead console or Lower Dash.	$870
1750-0186	Dome Lts Red/White Incandescent additional. White light wire through door and light assembly mounted switch. Red light through light assembly mounted switch. Location: Centered rear of cab.	$137
1750-0187	Auto drain, Kussmaul model 091-9-089 120V. For use with air compressor 091-9B-1 only.	$198
1750-0188	DPF regeneration override switch.	$193
1750-0189	Gauge ambient temperature with digital display. Locate display on officer side switch panel.	$793
1750-0190	Dome Lts Red/White LED. Package includes two lights mounted in the front of the cab. White light wire through door and light assembly mounted switch. Red light through light assembly mounted switch.	$388
1750-0191	Cab quad headlights below front bumper in addition to standard headlights.	$489
1750-0194	Dome Lts Red/White LED additional (PR). White light wire through door and light assembly switch. Red light through light assembly switch. Location: Rear crew area.	$388
1750-0195	Cab dome lts red/white (2 red/white, 2 white) 4" incandescent. White light wired thru door and light assembly mounted rocker switch. Red light thru light assembly mounted rocker switch. Red/white located in front of cab, white located at rear cab doors.	$558
1750-0196	Battery charger Newmar model PT-80, 80amp.	$3,369
1750-0197	Clamshell controller mounted on driver's side of engine cover for the air horns.	$119
1750-0200	Whelen model 1510R red strobe hazard warning light. Locate in cab under over head console.	$259
1750-0203	Special location for battery charger indicator. Location: [#LOC].	$106
1750-0205	Handheld flashlight, orange Streamlight Vulcan flashlight with vehicle mount system. Location: [#LOC].	$246
1750-0206	Clamshell controller mounted on officer's side cab dash for Q2B and air horns.	$119
1750-0207	Lovered cover for battery charger or air compressor (EA). Finish to match cab interior.	$185
1750-0208	Light Whelen model PSA00FAR LED (4) amber. Horizontal mounted flashing strip light on each of the interior lower cab door panels outboard. Wire through door switch.	$756
1750-0209	Clamshell controller mounted on on officer's side of engine cover (knee height) for Q2B.	$119
1750-0210	Vernier engine throttle in cab for pump&roll operations. Locate in console or Lower Dash. Includes selector sw also in center console or Lower Dash.	$870
1750-0212	Battery charger and air compressor package 240 VAC/ 50 HZ.	$1,373
1750-0214	Mount customer supplied GPS antenna on cab roof. Location: [#LOC].	$167
1750-0215	Turn signal Whelen M6 LED arrow amber pair located [#LOC].	$622
1750-0221	Xenon HID cab headlights. CIIX and TyphoonX only.	$1,706
1750-0222	12 volt electrical outlet in the cab wired through ignition. Location: [#LOC].	$58
1750-0223	Control push button switch center electrical cover offset to officer side for air horns	$91
1750-0231	Light Whelen model PSA00FAR LED (3) amber. Horizontally mounted flashing strip light on each of the interior lower cab door panels outboard. Wire through door switch.	$566
1750-0232	Incandescent Red/White domes and upper NFPA step lighting. Package includes two lights mounted in the front and two mounted in the rear of the cab. White light wire through door and light assembly mounted switch. Red light through light assembly mounted switch. Upper cab step areas to have for NFPA incandescent step lighting. Step lighting to be positioned per OEM recommendations for best compliance to NFPA.	$635
1750-0234	Digital speedometer officer's side overhead.	$552
1750-0249	Dome/Pump panel Lts 4" Red/White LED top mount enclosed cab. Package includes (4) light assemblies evenly spaced over top mount enclosed pump panel. White light wire through door and light assembly switch. Red light through light assembly switch.	$1,806
1750-0250	Dome Lt Red/White LED additional (EA). White light wire through door and light assembly switch. Red light through light assembly switch. Location: Rear facing engine cover seat(s).	$195
1750-0252	Kussmaul mounting plate model 091-9H for 12v air compressor.	$78
1750-0253	Courtesy light for officer foot switch(es)wired through marker lights. Whelen model 0SC0EDCR clear light. Quest with heat to feet only.	$124
1750-0254	Stream Light model SL-20X-LED black handheld flashlight package. Includes (5) flashlights, (1) single 120V flashlight charger located officer side engine cover ahead of 3X3 and (1) 5-unit 120V charger located on officer engine cover rearward of 3X3.	$1,104
1750-0255	Stream Light Vulcan LED orange handheld lantern package. Includes (4) lanterns with 120V charger and vehicle mounts located in driver side rear wall medical cabinet on top shelf, (2) over (2). Includes shelf to be angled forward for ease of viewing.	$1,147
1750-0256	Auto eject block heater receptacle inlet 15amp with a [#COL] cover. Location: [#LOC].	$498
1750-0260	Battery charger, Super Smart, 20 amp with 120V Kussmaul HP air compressor.	$1,593
1750-0261	Clamshell controller mounted on on officer's side cab dash at "A" post for Whelen Howler.	$119
1750-0262	Auto transfer switch 120 volt. Includes 8 place breaker box. Allows interior receptacles to be powered by either shore power or generator. Ship to VanMor for installation.	$728
1750-0263	Radio speakers pair. Locate each side rear cab ceiling. Wiring to terminate in center dash for customer supplied radio(s).	$261
1750-0264	Block/oil pan heater on/off 110V switch. Location: inside driver door; rear of seat.	$165
1750-0267	Battery charger Kussmaul 4000, 45 amp with air compressor.	$2,329
1750-0268	Battery charger Kussmaul 40 amp model 1200 with 120V HP air compressor.	$2,320
1750-0269	12ga dedicated ground wire to center overhead console.	$75

1750-0270	Control push-button switch officer side (side facing) of center electrical cover for Q2B siren.	$91
1750-0271	Control push-button switch officer side (side facing) of center electrical cover for air horns.	$91
1750-0275	Receptacle inlet 30amp household with a [#COL] cover. Location: [#LOC].	$531
1750-0276	Battery charger Newmar model EV-40-12-1, 40amp.	$1,397
1750-0278	Light Whelen LED strip model PSC0CDCR to illuminate cab floor. Horizontally mounted on seat riser. Wire through door switch. Location: [#LOC]	$147
1750-0279	Clamshell controller mounted on on officer's side of engine cover for Q2B. Switch to be on top horz surface next to dash.	$119
1750-0283	LED cab headlights. TyphoonX, CIIX and QST2 only.	$1,831
1750-0284	Switch additional guarded toggle. Location and Function: [#LOC].	$193
1750-0285	The chassis shall be pre-wired for installation of tire chains. Includes guarded toggle switch located on the driver side diagnostic panel.	$407
1750-0286	Receptacle block heater inlet 20amp with a [#COL] cover. Location: [#LOC].	$277
1750-0289	Battery charger Kussmaul 4000, 45 amp	$1,497
1750-0300	Radio AM/FM/CD/weather band w/auxiliary input port located [#LOC].	$677
1750-0302	Control push-button switch officer side ovherhead for Rumbler.	$91
1750-0304	Radio Pioneer DEH-X 7500HD AM/FM CD/USB located [#LOC].	$932
1750-0306	Radio speakers additional pair Pioneer TS-G1341R. Locate each side rear cab ceiling.	$333
1750-0309	Air horn switch on passenger side wall of mic box on rear cab wall. Switch to be labeled "Evacuation Alert".	$135
1750-0310	Clamshell controller mounted on officer's side of engine cover for Federal Signal Rumbler.	$119
1750-0314	Battery charger Kussmaul model 12 HO PIM, 20 amp. Includes model 091-189-12 indicator located adjacent to inlet receptacle.	$1,344
1750-0315	Rear upper window wipers (PR). Top mount enclosed cab only. Requires 4" cap.	$1,334
1750-0316	Switch horn button two position DOT/Rumbler.	$95
1750-0317	Auto-Eject receptacle inlet 20 amp located driver side rear of body above tail lights in diamond plate box with a yellow cover.	$664
1750-0319	Control push-button switch officer side (side facing) of center electrical cover for EQ2B siren.	$91
1750-0320	Conduit flexible .75" for radio installation distribution box to officer's overhead.	$289
1750-0321	ATC/KD driving lights (PR) with rubber housings. Includes switch in cab accessible to driver. Location: [#LOC].	$820
1750-0322	Light Whelen model PSC00FCR LED (4) clear. Vertically mounted flashing strip light with 14 flash patterns including steady burn shall be mounted on the lower cab step well areas (interior). The front doors shall have (1) strip light shall be located on forward step well wall (both sides). The rear doors shall have (1) strip light shall be located on rear step well wall (both sides). Wire through door switch.	$756
1750-0323	Engine tunnel to be fitted with a position activation switch to activate engine compartment lighting when not in the fully closed position.	$478
1750-0324	Air compressor, Kussmaul model 091-9 12V.	$902
1750-0325	Pigtail, minimum of 18" of wire for service of the battery charger and air compressor.	$46
1750-0326	Auto transfer switch 120 volt. Includes 2 place breaker box. Allows interior receptacles to be powered by either shore power or generator.	$708
1750-0327	Switch momentary to activate heat option contained in mirrors for 10 minutes. The heat will automatically turn itself off after the heat activation time period (10 minutes) has expired.	$186
1750-0328	Auto transfer switch 120 volt. Includes 8 place breaker box. Allows interior receptacles to be powered by either shore power or inverter.	$728
1750-0329	Cornering light relay circuits for lights in center of rear tandem wheel well. Includes (2) relays. Requires scene light option. Interlocked with park brake.	$394
1750-0330	Dome Lt Red/White LED additional (EA). White light wire through door and light assembly switch. Red light through light assembly switch. Location: centered between rear cab dome lights.	$195
1750-0331	Control push-button switch driver side (side facing) of center electrical cover for EQ2B siren.	$91
1750-0332	Dome lights Red/White incandescent. Package includes two lights mounted in the front and two mounted in the rear of the cab Trucklite 80 series with push style on/off button (may be used with Ford chassis). White light wire through door and light assembly mounted switch. Red light through light assembly mounted switch.	$536
1750-0333	Dome lights White incandescent. Package includes two lights mounted in the front and two mounted in the rear of the cab Trucklite 80 series with push style on/off button (may be used with Ford chassis). Lights wire through door and light assembly mounted switch.	$536
1750-0334	Dome lights White incandescent. Package includes two lights mounted in the front of the cab Trucklite 80 series with push style on/off button (may be used with Ford chassis). Lights wire through door and light assembly mounted switch.	$268
1750-0335	Metric speedometer, in English dominant main cab gauge cluster.	$2,060
1750-0336	Whelen traffic advisor control head (model TRACTRL1A) shall be mounted in the center overhead panel. The control head shall be wired to the main power switching circuit. There shall be a 50' control cable (model TAPVC50) ran from the control head to the rear of the body, coiled up for dealer supplied and installed traffic advisor.	$964
1750-0337	Garmin GSP 18X USB. May be mounted at E-ONE discretion on the cab roof within reach of cab 12VDC hot outlet(s).	$235
1750-0338	Radio Pioneer DEH-3300UB AM/FM CD/USB (with a pair of TS-D1302R speakers) located [#LOC].	$932
1750-0339	Radio speakers additional pair Pioneer TS-D1302R. Locate each side rear cab ceiling.	$333
1750-0340	Control push-button switch officer side (side facing) of center electrical cover for EQ2B siren brake.	$91
1750-0341	Transverse cab compartment dome light package (4) LED. Trucklite 44 series.	$553

1750-0342	Battery charger Kussmaul model 12 HO PIM, 20 amp. Includes model 091-189-12 indicator located behind driver's door adjacent to exterior handrail.	$1,344
1750-0343	Battery charger E-ONE LPC 20. 120 volt inlet, 20 amp output.	$577
1750-0344	Battery charger E-ONE LPC 40. 120 volt inlet, 40 amp output.	$878
1750-0350	Install customer supplied radio/intercom (ea). Loc: [#LOC].	$479
1750-0351	Kussmaul solar power charging system; model 092-1220-1. Location: Center rear cab roof.	$2,266
1750-0353	Dome Lts Red/White LED. Package includes two lights mounted in the front and three mounted in the rear of the cab. White light wired through door and light assembly switch. Red light through light assembly switch.	$987
1750-0355	Each 110 volt cab receptacle shall have a dedicated breaker within the breaker box. This is to provide each cab mounted receptacle (single outlet, duplex, etc. as applicable) with its own isolated circuit.	$255
1750-0356	Radio speaker (1). Locate center rear ceiling. Wiring to terminate in center overhead console for customer supplied radio.	$133
1750-0358	Antenna base Tessco P/N 90942 (NMO Motorola Style - also called MATM style) on cab roof package (5). Locations: (1) each side rearward of light bar (1) each side forward of the vista. These (4) shall be positioned side to side as required to prevent interference with light tower and its operation. There shall be (1) additional mounted on the officer side rear corner of the cab roof. All (5) shall have coax cable terminating below the officer seat.	$447
1750-0360	Auto-Eject receptacle inlet 30 amp 240 volt located [#LOC] and with a [#COL] cover.	$801
1750-0361	Cab quad headlights in front bumper in addition to standard headlights.	$489
1750-0364	Cab quad headlights below front bumper in addition to standard headlights. The headlights shall be mounted in a tread plate box that will extend the full depth and width of the hose trays mounted within the bumper ext. on each side.	$551
1750-0367	Stream Light Vulcan LED orange handheld lantern package. Includes (4) lanterns with 120V charger and vehicle mounts. Mount as directed during final inspection.	$1,147
1750-0368	Dome Lts Red/White 4" LED (6). Lights to be located two front and four rear. White light wired through door and light assembly mounted rocker switch. Red light through light assembly mounted rocker switch.	$2,167
1750-0369	On-Spot activation switch shall have a red flip up safety guard. The switch shall de located on the driver side overhead panel offset to the officer side as far as possible.	$49
1750-0370	Engine hourmeter in cab.	$151
1750-0372	12 VDC (or 24VDC) electrical outlet in the cab wired battery hot with 14AWG at each seated position. Outlets are shared within the same circuit.	$231
1750-0374	Light Whelen model PSB00FBR LED (4) blue. Horizontally mounted flashing strip light on each of the inside lower cab door panels. Wire through door switch.	$756
1750-0375	Switch console mounted to the driver side engine cover.	$152
1750-0376	Light Whelen model PSR00FRR LED (3) red. Horizontally mounted flashing strip light on each of the inside lower cab door panels. Wire through door switch.	$569
1750-0377	Additional 4" white LED dome lights (PR) for rear of cab wired battery hot to a 15 min. timer switch. Locate switch on interior officer side rear side wall just above floor level.	$459
1750-0378	Switch momentary to illuminate cab dome lighting for 15 minutes. The lights will automatically turn themselves off after the activation time period (15 minutes) has expired. Locate switch on interior officer side rear side wall just above floor level.	$240
1750-0380	35 AMP inline fuse as hot lead for radio installation. Radio circuit with G30060-1CR in-line fuse 35 amp. Fuse wired to ignition side to power the radio head. To be labeled and identified as "HOT". In-line fuse to be clearly labeled. Wiring located behind a face plate in the center overhead also provide ground wire and label wires. Label ground "Chassis Ground". Fuse to be down line from standard fuse and accessible for Motorola Spectra 800 MHz radio.	$541
1750-0381	Cornering light relay circuits for cab/body lights on side of unit. Includes (2) relays. Interlocked with park brake.	$394
1750-0383	Radio Jensen JHD1630B AM/FM/WB (with a pair of Polk Audio DXi525 5.25" speakers) located [#LOC].	$1,038
1750-0385	Cab step lighting package. Includes (2) EON LED lights per side IPOS. (1) Light per door mounted in the cab step well area	$240
1750-0388	Handheld Flashlight, black Streamlight SL-20X with 12 VDC charger. Location: driver and officer rear cab wall outboard below seat support channel.	$213
1750-0389	Radio speakers pair. Locate (1) above officer and (1) centered in rear crew cab area. Wiring to terminate (1) center dash, (1) center overhead for customer supplied radio(s).	$261
1750-0390	Radio Poly-Planar AM/FM CD/MP3 with USB port located center overhead console offset to officer side.	$829
1750-0392	Battery charger Kussmaul 75 amp model 091-149-12 with 091-9 air compressor.	$3,366
1750-0393	Switch secondary braking three position Jacobs/Off/Telma. Jacobs Brake top position, off center, Telma bottom position.	$198
1750-0395	Light EON LED to illuminate cab floor(EA). Horizontally mounted on seat riser. Wire through door switch. Location: [#LOC].	$147
1750-0396	Control push-button switch on officer's overhead for Q2B siren brake.	$91
1750-0397	Mount customer supplied antenna on cab roof. Location: centered behind lightbar, driver side forward on vista roof, officer side forward on vista roof and officer side rear cab roof. All terminating in overhead command area cabinet.	$667
1750-0398	Mount customer supplied GPS antenna on interior of cab. Location will be per antenna manufacturers' recommendation.	$167
1750-0399	Control push-button switch driver side of center dash upper tier for Q2B siren.	$91

1750-0401	Cornering light relay circuits for only the side facing gravel shield lights. Includes (2) relays. Requires scene light option. Interlocked with park brake.	$394
1750-0402	Install six (6) customer supplied radio cables. (3) 30' Cables will run from behind driver seat to center of dash. (3) 17' Cables will run from behind driver seat to the overhead cabinet area in cab.	$695
1750-0403	Install radio interface cable for Motorola model APX 6500. Run cable from back of driver seat to center of dash. The interface cable shall consist of the following FireCom cables PN 110-5136-30 (4' interface cable), PN 108-0086-00 (15' extension cable), PN 108-0085-00 (10' extension cable) for a total of 29' in length.	$598
1750-0404	Dome lights Whelen red/white 6" Super-LED surface mounted interior lights. Four (4) model 60CREGCS lights to be located two front and two rear. White light wired through door and light assembly. Red light through switch mounted on light assembly.	$1,280
1750-0405	Battery charger Kussmual model 091-200-12-194-WT-RD. 120 Volt 40 Amp output includes water tight display mounted adjacent to inlet.	$1,684
1750-0406	The air horn(s) shall not be included within the Multiplex system (separate switching from Multiplex display required).	$370
1750-0407	Control push-button switch for Rumbler. Location [#LOC].	$91
1750-0408	Mount customer supplied (1) radio cable and (4) antennas. Antenna locations: (1) driver and officer side forward cab roof, (1) driver and officer side rearward cab roof. Route all cables to upper rear wall medical cabinet. Route radio cable from center of dash to upper rear wall of medical cabinet.	$669
1750-0410	Switch, additional through multiplex display. Function: [#LOC].	$86
1750-0411	Dome Lts Red/White Whelen model 60CREGCS LED. Package includes two lights mounted in the front and four mounted in the rear of the cab. White light wired through door and light assembly switch. Red light through light assembly switch.	$1,595
1750-0412	Kussmaul digital battery display model 091-194-IND-WT-RD in place of standard.	$329
1750-0414	Warning light Whelen M6R series Linear Super LED (PR) red. Location: interior of canopy doors wired through each door ajar switch only.	$682
1750-0415	Dome Lt Red/White LED additional (EA). White light wire through door and light assembly switch. Red light through light assembly switch. Location: Below forward vista medical cabinet.	$195
1750-0417	Flexible 1" conduit with connectors. Location: radio cabinet to center of dash.	$289
1750-0426	Turn signal Weldon LED amber pair located [#LOC].	$520
1750-0427	Antenna base Tessco P/N 90942 (NMO Motorola Style - also called MATM style) on cab roof. Location: (4) vista cab roof, (4) front cab roof. See sales for exact location labeling instructions.	$810
1750-0429	Dual USB charging ports in the cab wired battery hot. Location: [#LOC].	$66
1750-0431	Conduit flexible 1" for radio installation center of dash to area behind officer's seat.	$289
1750-0433	Battery charger Kussmaul LPC 80. 120 volt inlet, 80 amp output.	$1,612
1750-0434	Radio cabinet ventilation fan (PR). Location: ceiling of radio cabinet wired through ignition.	$209
1750-0436	Dome Lt Red/White LED additional (EA). White light wire through door and light assembly switch. Red light through light assembly switch. Location: center between front cab seats.	$195
1750-0437	The chassis shall be pre-wired for installation of tire chains. Includes guarded toggle switch located on the center dash panel.	$407
1750-0438	Radio AM/FM CD with weather band located [#LOC]. Includes speakers in ceiling to rear of driver/officer.	$775
1750-0439	Dome Lt Red/White Whelen model 60CREGCS LED additional (EA). White light wired through door and light assembly switch. Red light through light assembly switch. Location: center rear crew cab ceiling.	$321
1750-0440	Switch horn button three position DOT/air horn/electronic siren. Wired through multiplex display screen.	$193
1750-0441	Battery charger Kussmaul model EV40, 40 amp.	$1,464
1750-0442	Light EON LED (EA). Horizontally mounted in seat riser. Wire through door switch. Location: officer seat riser.	$147
1750-0445	Clamshell controller mounted on center console offset to officer side for air horns.	$119
1750-0447	Dome Lts Red/White Whelen model 60CREGCS LED. Package includes two lights mounted in the front and two mounted in the rear of the cab. White light wired through door and light assembly switch. Red light through light assembly switch.	$1,064
1750-0448	Light Whelen model PSRASXCR LED (4) red/amber. Horizontally mounted flashing strip light on each of the inside lower cab door panels. Wire through door switch.	$786
1750-0449	Momentary DPF regeneration override switch.	$193
1750-0451	Steering wheel with switch pods IPOS. Includes wiper functions, master warning sw, air horn sw, aux brake on/off and (3) aux switches. For use only with Typhoon and CII NOT equipped with 4Front. (Requires seperate programming options to activate aux switches)	$870
1750-0452	Radio speakers (3). Locate officer ceiling and each side rear cab ceiling. Wiring to terminate in center overhead console for customer supplied radio(s).	$449
1750-0453	Auto transfer switch 120 volt. Includes 12 place breaker box. Allows interior receptacles to be powered by either shore power or generator.	$766
1750-0454	Courtesy light for driver and officer located on front of risers wired through marker lights. Whelen model 0SR00SCR light.	$243
1750-0455	Block heater connector; 15 amp male. Location: driver side under front bumper adjacent to frame rail.	$96
1750-0457	Turn signal Whelen 600 LED amber arrow pair with black bezel located [#LOC].	$665
1750-0460	Light Whelen model PSR00FRR LED (4) red. Horizontally mounted flashing strip light on each of the inside cab door panels below the windows. Wire through door switch.	$756
1750-0462	Turn signal Whelen M6 LED arrow amber pair with clear lenses located [#LOC].	$622

1750-0464	Dome Lt Red/White Whelen model 60CREGCS LED. One (1) light centered between driver/officer in the ceiling. White light wired through door and light assembly switch. Red light through light assembly switch.	$321
1750-0466	DEF level gauge adjacent to tank fill area.	$334
1750-0468	Relocate driver master power window controls and officer front window control to center upper tier.	$395
1750-0469	Flexible 3/4" conduit with connectors. Location: center cab dash to rear medical cabinet upper area.	$420
1750-0470	Relocate driver master power window controls to cab dash upper tier offset to driver.	$395
1800-0001	Cooling for EGR engines. Includes charge air cooler.	$6,101
1800-0005	Cooling system for use with Cyclone II X, Typhoon X, and Quest chassis. Includes coolant recovery system.	$6,101
1800-0006	Remote coolant filter for engine cooling system (Cummins ISC and ISL engines only).	$523
1800-0013	Cooling system for use with Cyclone II X, Typhoon X, and Quest chassis. For use with 2010/2013 EPA engines. Includes coolant recovery system.	$6,874
1800-0014	Cooling system for use with Cyclone II X Hush Mid Engine chassis. Includes coolant recovery system.	$13,199
3000	**Body**	
3100-0000	Driver side body with full height 24" wide forward and 36" wide rearward compartmentation. Includes (1) 56" wide compartment over the wheel well.	$8,200
3100-0001	Driver side body with full height 30" wide forward and 36" wide rearward compartmentation. Includes (1) 56" wide compartment over the wheel well.	$8,772
3100-0002	Driver side body with full height 36" wide forward and 36" wide rearward compartmentation. Includes (1) 56" wide compartment over the wheel well.	$9,397
3100-0003	Driver side body with full height 42" wide forward and 42" wide rearward compartmentation. Includes (1) 56" wide compartment over the wheel well.	$10,043
3100-0004	Driver side body with full height 48" wide forward and 48" wide rearward compartmentation. Includes (1) 56" wide compartment over the wheel well.	$10,744
3100-0006	Driver side body with upper and lower compartmentation. Includes 24" wide forward and 36" wide rearward lower compartments and (3) opening upper compartments.	$8,609
3100-0007	Driver side body with upper and lower compartmentation. Includes 30" wide forward and 36" wide rearward lower compartments and (3) opening upper compartments.	$9,181
3100-0008	Driver side body with upper and lower compartmentation. Includes 36" wide forward and 36" wide rearward lower compartments and (3) opening upper compartments.	$9,795
3100-0009	Driver side body with upper and lower compartmentation. Includes 42" wide forward and 42" wide rearward lower compartments and (3) opening upper compartments.	$10,453
3100-0010	Driver side body with upper and lower compartmentation. Includes 48" wide forward and 48" wide rearward lower compartments and (3) opening upper compartments.	$11,155
3100-0011	Driver side body with upper and lower compartmentation. Includes 42" wide forward and 42" wide rearward lower compartments, (3) opening upper compartments with portable water tank storage with access door at rear.	$10,765
3100-0012	Driver side body with upper and lower compartmentation. Includes 48" wide forward and 48" wide rearward lower compartments, (3) opening upper compartments with portable water tank storage with access door at rear.	$11,490
3100-0013	Driver side body with full height 24" wide forward and 50" wide rearward extended compartmentation. Includes (1) 56" wide compartment over the wheel well.	$8,772
3100-0014	Driver side body with full height 30" wide forward and 50" wide rearward extended compartmentation. Includes (1) 56" wide compartment over the wheel well.	$9,348
3100-0015	Driver side body with full height 36" wide forward and 50" wide rearward extended compartmentation. Includes (1) 56" wide compartment over the wheel well.	$9,958
3100-0016	Driver side body with full height 42" wide forward and 56" wide rearward extended compartmentation. Includes (1) 56" wide compartment over the wheel well.	$10,616
3100-0017	Driver side body with full height 48" wide forward and 62" wide rearward extended compartmentation. Includes (1) 56" wide compartment over the wheel well.	$11,319
3100-0018	Driver side body with full height 24" wide forward and 50" wide rearward enhanced extended compartmentation. Includes (1) 56" wide compartment over the wheel well.	$9,036
3100-0019	Driver side body with full height 30" wide forward and 50" wide rearward enhanced extended compartmentation. Includes (1) 56" wide compartment over the wheel well.	$9,609
3100-0020	Driver side body with full height 36" wide forward and 50" wide rearward enhanced extended compartmentation. Includes (1) 56" wide compartment over the wheel well.	$10,221
3100-0021	Driver side body with full height 42" wide forward and 56" wide rearward enhanced extended compartmentation. Includes (1) 56" wide compartment over the wheel well.	$10,880
3100-0022	Driver side body with full height 48" wide forward and 62" wide rearward enhanced extended compartmentation. Includes (1) 56" wide compartment over the wheel well.	$11,581
3100-0024	Driver side body with full height 36" wide forward and 36" wide rearward compartmentation. Includes (1) 56" wide compartment over the wheel well.	$10,043
3100-0025	Driver side body with full height 42" wide forward and 42" wide rearward compartmentation. Includes (1) 56" wide compartment over the wheel well.	$10,744
3100-0026	Driver side body with full height 48" wide forward and 48" wide rearward compartmentation. Includes (1) 56" wide compartment over the wheel well.	$11,496
3100-0049	Driver side body with full height 24" wide forward and 36" wide rearward compartmentation. Includes (1) 56" wide compartment over the wheel well and 30 degree rear body angle for greater angle of departure.	$8,516

3100-0050	Driver side body with full height 30" wide forward and 36" wide rearward compartmentation. Includes (1) 56" wide compartment over the wheel well and 30 degree angle of departure.	$9,089
3100-0051	Driver side body with full height 36" wide forward and 36" wide rearward compartmentation. Includes (1) 56" wide compartment over the wheel well and 30 degree rear body angle for greater angle of departure.	$9,702
3100-0052	Officer half side body with 24" wide forward and 36" wide rearward compartmentation. Includes adjustable ladder tracks and 30 degree rear body angle for greater angle of departure.	$4,418
3100-0053	Officer half side body with 30" wide forward and 36" wide rearward compartmentation. Includes adjustable ladder tracks and 30 degree rear body angle for greater angle of departure.	$4,418
3100-0054	Stainless steel driver side body with full height 36" wide forward and 48" wide rearward compartmentation (interior). Includes (1) 60" wide compartment over the wheel well.	$10,323
3100-0055	Stainless steel driver side body with full height 48" wide forward and 48" wide rearward compartmentation (interior). Includes (1) 60" wide compartment over the wheel well.	$11,819
3100-0056	Stainless steel driver side body with full height 60" wide forward and 60" wide rearward compartmentation (interior). Includes (1) 60" wide compartment over the wheel well.	$12,648
3100-0059	Stainless steel driver side body with full height 48" wide forward and 60" wide rearward compartmentation (interior). Includes (1) 60" wide compartment over the wheel well.	$12,410
3100-0060	Stainless Steel officer half side body with 36" wide forward and 48" wide rearward compartmentation (interior). Includes adjustable ladder tracks.	$5,165
3100-0067	Driver side body with upper and lower compartmentation. Includes 60" wide forward and 42" wide rearward lower compartments and (3) opening upper compartments.	$11,935
3100-0068	Driver side body with upper and lower compartmentation. Includes 60" wide forward and 42" wide rearward lower compartments, (3) opening upper compartments with portable water tank storage with access door at rear.	$12,263
3100-0069	Driver side body with full height 60" wide forward and 42" wide rearward compartmentation. Includes (1) 56" wide compartment over the wheel well.	$11,496
3100-0074	Driver side body with full height 36" wide rearward compartmentation. Includes (1) 56" wide compartment over the wheel well.	$7,661
3100-0075	Driver side body with full height 36" wide rearward compartmentation. Includes (1) 56" wide compartment over the wheel well and 30 degree rear body angle for greater angle of departure.	$7,980
3100-0076	Stainless steel driver side body with full height 36" wide forward and 48" wide rearward compartmentation (interior). Includes (1) 60" wide compartment over the wheel well.	$10,323
3100-0077	Stainless steel driver side body with full height 48" wide forward and 48" wide rearward compartmentation (interior). Includes (1) 60" wide compartment over the wheel well.	$11,819
3100-0078	Stainless steel driver side body with full height 60" wide forward and 60" wide rearward compartmentation (interior). Includes (1) 60" wide compartment over the wheel well.	$12,648
3100-0079	Driver side body with full height 54" wide forward and 60" wide rearward compartmentation. Includes (1) 56" wide compartment over the wheel well. The compartment behind the wheel well has upper area for RM pump panel mounting.	$16,683
3100-0080	Driver side body with full height 48" wide forward and 60" wide rearward compartmentation (interior). Includes (1) 60" wide compartment over the wheel well.	$12,410
3100-0082	Stainless steel driver side body with full height 24" wide forward and 48" wide rearward compartmentation (interior). Includes (1) 60" wide compartment over the wheel well.	$8,830
3100-0084	Stainless steel driver side body with full height 24" wide forward and 48" wide rearward compartmentation (interior). Includes (1) 60" wide compartment over the wheel well.	$8,830
3100-0085	Driver half side body with 24" wide forward and 36" wide rearward compartmentation.	$4,100
3100-0087	Driver half side body with 30" wide forward and 36" wide rearward compartmentation.	$4,681
3100-0089	Driver half side body with 42" wide forward and 42" wide rearward compartmentation.	$5,022
3100-0091	Driver side body with full height 60" wide forward and 56" wide rearward compartmentation. Includes (1) 56" wide compartment over the wheel well.	$12,302
3100-0092	Driver side body with full height 50" wide enhanced extended rearward compartmentation. Includes (1) 56" wide compartment over the wheel well.	$8,498
3100-0093	Driver side body with full height 24" wide forward and 36" wide rearward compartmentation. Includes (1) 56" wide compartment over the wheel well.	$8,200
3100-0094	Driver side body with full height 30" wide forward and 36" wide rearward compartmentation. Includes (1) 56" wide compartment over the wheel well.	$8,772
3100-0095	Driver side body with full height 36" wide forward and 36" wide rearward compartmentation. Includes (1) 56" wide compartment over the wheel well.	$9,397
3100-0096	Driver side body with full height 42" wide forward and 42" wide rearward compartmentation. Includes (1) 56" wide compartment over the wheel well.	$10,043
3100-0097	Driver side body with full height 48" wide forward and 48" wide rearward compartmentation. Includes (1) 56" wide compartment over the wheel well.	$10,744
3100-0098	Driver side body with upper and lower compartmentation. Includes 24" wide forward and 36" wide rearward lower compartments and (3) opening upper compartments.	$8,609
3100-0099	Driver side body with upper and lower compartmentation. Includes 30" wide forward and 36" wide rearward lower compartments and (3) opening upper compartments.	$9,181
3100-0100	Driver side body with upper and lower compartmentation. Includes 36" wide forward and 36" wide rearward lower compartments and (3) opening upper compartments.	$9,795
3100-0101	Driver side body with upper and lower compartmentation. Includes 42" wide forward and 42" wide rearward lower compartments and (3) opening upper compartments.	$10,453
3100-0102	Driver side body with upper and lower compartmentation. Includes 48" wide forward and 48" wide rearward lower compartments and (3) opening upper compartments.	$11,155

3100-0103	Driver side body with upper and lower compartmentation. Includes 42" wide forward and 42" wide rearward lower compartments, (3) opening upper compartments with portable water tank storage with access door at rear.	$10,765
3100-0104	Driver side body with upper and lower compartmentation. Includes 48" wide forward and 48" wide rearward lower compartments, (3) opening upper compartments with portable water tank storage with access door at rear.	$11,490
3100-0105	Driver side body with full height 24" wide forward and 50" wide rearward extended compartmentation. Includes (1) 56" wide compartment over the wheel well.	$8,772
3100-0106	Driver side body with full height 30" wide forward and 50" wide rearward extended compartmentation. Includes (1) 56" wide compartment over the wheel well.	$9,348
3100-0107	Driver side body with full height 36" wide forward and 50" wide rearward extended compartmentation. Includes (1) 56" wide compartment over the wheel well.	$9,958
3100-0108	Driver side body with full height 42" wide forward and 56" wide rearward extended compartmentation. Includes (1) 56" wide compartment over the wheel well.	$10,616
3100-0109	Driver side body with full height 48" wide forward and 62" wide rearward extended compartmentation. Includes (1) 56" wide compartment over the wheel well.	$11,319
3100-0110	Driver side body with full height 24" wide forward and 50" wide rearward enhanced extended compartmentation. Includes (1) 56" wide compartment over the wheel well.	$9,036
3100-0111	Driver side body with full height 30" wide forward and 50" wide rearward enhanced extended compartmentation. Includes (1) 56" wide compartment over the wheel well.	$9,609
3100-0112	Driver side body with full height 36" wide forward and 50" wide rearward enhanced extended compartmentation. Includes (1) 56" wide compartment over the wheel well.	$10,221
3100-0113	Driver side body with full height 42" wide forward and 56" wide rearward enhanced extended compartmentation. Includes (1) 56" wide compartment over the wheel well.	$10,880
3100-0114	Driver side body with full height 48" wide forward and 62" wide rearward enhanced extended compartmentation. Includes (1) 56" wide compartment over the wheel well.	$11,581
3100-0115	Driver side body with full height 36" wide forward and 36" wide rearward compartmentation. Includes (1) 56" wide compartment over the wheel well.	$10,043
3100-0116	Driver side body with full height 42" wide forward and 42" wide rearward compartmentation. Includes (1) 56" wide compartment over the wheel well.	$10,744
3100-0117	Driver side body with full height 48" wide forward and 48" wide rearward compartmentation. Includes (1) 56" wide compartment over the wheel well.	$11,496
3100-0118	Driver side body with full height 24in. wide forward and 36in. wide rearward compartmentation. Includes (1) 56in. wide compartment over the wheel well and 30 degree rear body angle for greater angle of departure.	$8,516
3100-0119	Driver side body with full height 30" wide forward and 36" wide rearward compartmentation. Includes (1) 56" wide compartment over the wheel well and 30 degree rear body angle for greater angle of departure.	$9,089
3100-0120	Driver side body with full height 36" wide forward and 36" wide rearward compartmentation. Includes (1) 56" wide compartment over the wheel well and 30 degree rear body angle for greater angle of departure.	$9,702
3100-0121	Stainless steel driver side body with full height 36" wide forward and 48" wide rearward compartmentation (interior). Includes (1) 60" wide compartment over the wheel well.	$10,323
3100-0122	Stainless steel driver side body with full height 48" wide forward and 48" wide rearward compartmentation (interior). Includes (1) 60" wide compartment over the wheel well.	$11,819
3100-0123	Stainless steel driver side body with full height 60" wide forward and 60" wide rearward compartmentation (interior). Includes (1) 60" wide compartment over the wheel well.	$12,648
3100-0124	Stainless steel driver side body with full height 48" wide forward and 60" wide rearward compartmentation (interior). Includes (1) 60" wide compartment over the wheel well.	$12,410
3100-0125	Driver side body with full height 60" wide forward and 42" wide rearward compartmentation. Includes (1) 56" wide compartment over the wheel well.	$12,302
3100-0126	Driver side body with upper and lower compartmentation. Includes 60" wide forward and 42" wide rearward lower compartments and (3) opening upper compartments.	$11,935
3100-0127	Driver side body with upper and lower compartmentation. Includes 60" wide forward and 42" wide rearward lower compartments, (3) opening upper compartments with portable water tank storage with access door at rear.	$12,263
3100-0128	Driver side body with full height 60" wide forward and 42" wide rearward compartmentation. Includes (1) 56" wide compartment over the wheel well.	$11,496
3100-0129	Driver side body with full height 36" wide rearward compartmentation. Includes (1) 56" wide compartment over the wheel well.	$7,661
3100-0130	Driver side body with full height 36" wide rearward compartmentation. Includes (1) 56" wide compartment over the wheel well and 30 degree rear body angle for greater angle of departure.	$7,980
3100-0131	Stainless steel driver side body with full height 36" wide forward and 48" wide rearward compartmentation (interior). Includes (1) 60" wide compartment over the wheel well.	$10,323
3100-0132	Stainless steel driver side body with full height 48" wide forward and 48" wide rearward compartmentation (interior). Includes (1) 60" wide compartment over the wheel well.	$11,819
3100-0133	Stainless steel driver side body with full height 60" wide forward and 60" wide rearward compartmentation (interior). Includes (1) 60" wide compartment over the wheel well.	$12,648
3100-0134	Stainless Steel Driver side body with full height 48" wide forward and 60" wide rearward compartmentation (interior). Includes (1) 60" wide compartment over the wheel well.	$12,410
3100-0135	Driver side body with full height 60" wide forward and 56" wide rearward compartmentation. Includes (1) 56" wide compartment over the wheel well. Top Mount eMAX Only.	$12,302
3100-0136	Driver side tunnel to hold: Lower section (3) Backboards. Upper section (1) Divider full length of tunnel, bolted at front of tunnel and held in place by a slot in the rear of tunnel for removability.	$584

3100-0137	Driver side compartment top storage box. Box to be smooth plate and painted job color with diamond plate top. Box to have a rear vertically hinged door with push-button latch. Box to have diamond plate lids with push button latches.	$1,742
3100-0138	Driver side body with upper and lower compartmentation. Includes 24" wide forward and 36" wide rearward lower compartments and (2) opening upper compartments.	$8,609
3100-0139	Compartment L1 to have rescue style interior compartment depth and height.	$1,392
3100-0142	Driver side body with full height 42" wide forward and 48" wide rearward compartmentation. Includes (1) 56" wide compartment over the wheel well and upper area for recessed pike pole storage.	$10,043
3100-0143	Driver side body with full height 52" wide forward and 52" wide rearward compartmentation. Includes (1) 56" wide compartment over the wheel well.	$11,496
3100-0144	Driver side body with full height 36" wide forward and 50" wide rearward compartmentation. Includes (1) 56" wide compartment over the wheel well.	$10,221
3100-0145	Driver side body with full height 30" wide forward and 50" wide rearward compartmentation. Includes (1) 56" wide compartment over the wheel well.	$9,609
3100-0146	Driver side body with full height 24" wide forward and 50" wide rearward compartmentation. Includes (1) 56" wide compartment over the wheel well.	$9,036
3100-0148	Driver side body with full height 42" wide forward and 56" wide rearward compartmentation. Includes (1) 56" wide compartment over the wheel well.	$10,834
3100-0149	Driver side body with full height 36" wide forward and 42" wide rearward compartmentation. Includes (1) 56" wide compartment over the wheel well.	$10,744
3100-0151	Driver side body with 42" wide x 38" high wide forward lower compartmentation and 42" wide x 26.75" high forward upper compartmentation. 42" wide full height rearward compartmentation. Includes (1) 56" wide compartment over the wheel well.	$11,820
3100-0152	Driver side body with full height 36" wide forward and 50" wide rearward enhanced extended compartmentation. Includes (1) 56" wide compartment over the wheel well.	$10,866
3100-0153	Driver side body with full height 42" wide forward and 56" wide rearward enhanced extended compartmentation. Includes (1) 56" wide compartment over the wheel well.	$11,569
3100-0154	Driver side body with full height 48" wide forward and 62" wide rearward enhanced extended compartmentation. Includes (1) 56" wide compartment over the wheel well.	$12,322
3100-0155	Driver side body with full height 60" wide forward and 56" wide rearward enhanced extended compartmentation. Includes (1) 56" wide compartment over the wheel well.	$13,127
3100-0156	Driver side body with full height 30" wide forward and 36" wide rearward compartmentation. Includes (1) 56" wide compartment over the wheel well. Front and rear compartment opening height to be 66.75" high.	$9,391
3100-0159	Driver side body with full height 42" wide forward and 56" wide rearward enhanced extended compartmentation. Includes (1) 56" wide compartment over the wheel well and one (1) storage tunnel and access door at rear.	$14,233
3100-0160	Driver side body with full height 30" wide forward and 50" wide rearward enhanced extended compartmentation. Includes (1) 56" wide compartment over the wheel well.	$10,213
3100-0161	Driver side body with 42" wide x 30" high wide forward lower compartmentation and 42" wide x 34.75" high forward upper compartmentation. 42" wide full height rearward compartmentation. Includes (1) 56" wide compartment over the wheel well.	$12,948
3100-0162	2-Arm Ladder Rack. The ladder rack includes amber lights on each end to visually indicate when the rack is in motion. Ladder rack to hold storage box with (1) vertically hinged rearward and (2) horizontally hinged outboard (when ladder rack in the down position) diamond plate doors with push button latches. The outboard horizontally hinged door(s) to have chains set to open at approx 160 degrees. Forward section of the box to hold (2) backboards and the rearward section to hold (1) stokes basket.	$16,861
3100-0163	Driver side body with full height 50" wide forward and 50" wide rearward enhanced extended compartmentation. Includes (1) 56" wide compartment over the wheel well.	$11,569
3100-0164	Driver side body with full height 56" wide forward and 56" wide rearward enhanced extended compartmentation. Includes (1) 56" wide compartment over the wheel well.	$12,322
3100-0165	Driver side body with full height 62" wide forward and 62" wide rearward enhanced extended compartmentation. Includes (1) 56" wide compartment over the wheel well.	$13,071
3100-0166	Driver side tunnel to hold: [#LOC].	$584
3100-0167	Driver side body with full height 62" wide forward and 62" wide rearward enhanced extended compartmentation. Includes (1) 56" wide compartment over the wheel well.	$12,288
3100-0168	Driver side body with full height 30" wide forward and 50" wide rearward enhanced extended compartmentation. Includes (1) 56" wide compartment over the wheel well. Rear compartment to be pumper style enhanced extended (shallow upper and deep lower compartmentation).	$11,906
3100-0170	Driver side body with 62" wide full height forward enhanced extended compartment, 36" wide half height second forward compartment and 50" wide half height rearward compartmentation.	$16,934
3100-0171	Driver side body with full height 24" wide forward and 50" wide rearward extended compartmentation. Includes (1) 33" wide compartment over the wheel well and (1) Zico Overhead Ladder Rack.	$14,754
3100-0172	Driver side body with full height 24" wide forward and 56" wide rearward extended compartmentation. Includes (1) 56" wide compartment over the wheel well.	$9,568
3100-0173	Driver side body with full height 24" wide forward and 50" wide rearward enhanced extended compartmentation. Includes (1) 56" wide compartment over the wheel well. Rear compartment to be pumper style enhanced extended (shallow upper and deep lower compartmentation).	$12,651
3100-0174	Driver side body with upper and lower compartmentation. Includes 36" wide forward and 50" wide rearward extended lower compartments and (3) opening upper compartments.	$14,385

3100-0175	Driver side body with full height 36" wide forward and 36" wide rearward compartmentation. Includes (1) 56" wide compartment over the wheel well and one (1) storage tunnel.	$12,705
3100-0176	Driver side body with full height 36" wide forward and 50" wide rearward enhanced extended compartmentation. Includes (1) 56" wide compartment over the wheel well and one (1) storage tunnel.	$13,529
3100-0177	Driver side body with full height 42" wide forward and 42" wide rearward compartmentation. Includes (1) 56" wide compartment over the wheel well and one (1) storage tunnel.	$13,407
3100-0178	Driver side body with full height 42" wide forward and 56" wide rearward enhanced extended compartmentation. Includes (1) 56" wide compartment over the wheel well and one (1) storage tunnel.	$14,233
3100-0179	Driver side body with full height 48" wide forward and 48" wide rearward compartmentation. Includes (1) 56" wide compartment over the wheel well and one (1) storage tunnel.	$14,159
3100-0180	Driver side body with full height 48" wide forward and 62" wide rearward enhanced extended compartmentation. Includes (1) 56" wide compartment over the wheel well and one (1) storage tunnel.	$14,985
3100-0181	Driver side body with full height 60" wide forward and 42" wide rearward compartmentation. Includes (1) 56" wide compartment over the wheel well and one (1) storage tunnel.	$14,966
3100-0182	Driver side body with full height 60" wide forward and 56" wide rearward enhanced extended compartmentation. Includes (1) 56" wide compartment over the wheel well and one (1) storage tunnel.	$15,787
3100-0183	Driver side body with full height 36" wide forward and 50" wide rearward enhanced extended compartmentation (2008 body design) with (1) 56" wide compartment over the wheel well.	$15,775
3100-0185	Driver side body with full height 20" wide forward and 50" wide rearward extended compartmentation. Includes (1) 56" wide compartment over the wheel well.	$8,578
3100-0186	Driver side upper body extension. Does not include any external doors. External framework and platework only. Platework shall be recessed.	$2,025
3100-0187	Stainless steel driver side body with full height 30" wide forward and 40" wide rearward compartmentation. Includes (1) 54" wide compartment over the wheel well.	$22,933
3100-0188	Stainless steel driver side body with full height 40" wide forward and 40" wide rearward compartmentation. Includes (1) 54" wide compartment over the wheel well.	$24,204
3100-0189	Stainless steel driver side body with full height 48" wide forward and 40" wide rearward compartmentation. Includes (1) 54" wide compartment over the wheel well.	$24,904
3100-0190	Stainless steel driver side body with full height 30" wide forward and 58" wide rearward enhanced extended compartmentation. Includes (1) 54" wide compartment over the wheel well.	$23,769
3100-0191	Stainless steel driver side body with full height 40" wide forward and 58" wide rearward enhanced extended compartmentation. Includes (1) 54" wide compartment over the wheel well.	$25,040
3100-0192	Stainless steel driver side body with full height 48" wide forward and 58" wide rearward enhanced extended compartmentation. Includes (1) 54" wide compartment over the wheel well.	$25,742
3100-0194	Stainless steel driver side body with full height/full depth 48" wide forward and 40" wide rearward compartmentation. Includes (1) 54" wide compartment over the wheel well.	$24,904
3100-0195	Driver 3/4 side body with full height 36" wide forward and 36" wide rearward compartmentation. Includes (1) 56" wide compartment over the wheel well.	$5,866
3100-0196	Driver half side body with (2) forward compartments (48" and 30" wide) and one rearward area for locating of side tank dump.	$4,573
3100-0197	Driver half side body with (2) forward compartments (48" and 30" wide) and (1) rearward compartment (24").	$5,382
3100-0198	Driver 3/4 side body with (2) lower forward compartments (48" and 30" wide), (3) upper compartments (54") and one lower rearward area for locating of side tank dump.	$6,324
3100-0199	Driver 3/4 side body with (2) lower forward compartments (48" and 30" wide), (3) upper compartments (54") and (1) lower rearward compartment (24").	$7,127
3100-0201	Driver full height side body with (2) lower forward compartments (48" and 30" wide), (3) upper compartments (54") and one lower rearward area for locating of side tank dump.	$8,076
3100-0202	Driver full height side body with (2) lower forward compartments (48" and 30" wide), (3) upper compartments (54") and (1) lower rearward compartment (24").	$8,880
3100-0203	Driver full height side body with (2) full height, rescue style, forward compartments (48" and 30" wide), (1) upper compartment (61" and offset rearward of the rack opening) and one lower rearward area for locating of side tank dump.	$8,076
3100-0204	Driver full height side body with (2) full height, rescue style, forward compartments (48" and 30" wide), (1) upper compartment (61" and offset rearward of the rack opening) and (1) lower rearward compartment (24").	$8,880
3100-0207	Driver full height side body with (2) lower forward compartments (48" and 30" wide), (3) upper compartments (54") with rear compartment face access door for portable tank storage and one lower rearward area for locating of side tank dump.	$9,353
3100-0208	Driver full height side body with (2) lower forward compartments (48" and 30" wide), (3) upper compartments (54") with rear compartment face access door for portable tank storage and (1) lower rearward compartment (24").	$10,155
3100-0209	Driver side body with full height 24" wide forward and 50" wide rearward enhanced extended compartmentation. Includes (1) 56" wide compartment over the wheel well.	$9,561
3100-0210	Driver full height side body with (2) full height, rescue style, forward compartments (48" and 30" wide), (2) upper compartment (40" wide) and (1) lower rearward compartment (24").	$8,880
3100-0211	Driver full height side body with (2) full height, rescue style, forward compartments (48" and 30" wide), (2) upper compartments (40" wide) and one lower rearward area for locating of side tank dump.	$8,076

3100-0212	(1) driver side roof top compartments with extra width to inboard side. Includes hinged raised compartment lid with turn latches, grab handle(s) and gas shock hold open and drain line(s) ran to below body. The lid to have (1) bracket mounted LED light and to be wired to door ajar indicator in cab.	$4,988
3100-0213	Stainless steel driver side body with full height 48" wide forward and 48" wide rearward compartmentation. Includes (1) 54" wide compartment over the wheel well.	$25,657
3100-0214	Stainless steel driver side body with full height 54" wide forward and 54" wide rearward compartmentation. Includes (1) 54" wide compartment over the wheel well.	$26,577
3100-0215	Stainless steel driver side body with full height 60" wide forward and 60" wide rearward compartmentation. Includes (1) 54" wide compartment over the wheel well.	$27,497
3100-0216	Compartment L1 to be 48.75" high in full depth lower area due to pipe routing for deck gun in hosebed storage pan.	$526
3100-0219	Driver half side body with 42" wide forward and 42" wide rearward compartmentation. Includes adjustable ladder tracks.	$5,022
3100-0220	Overhead Ladder Rack to be offset forward includes shifting compartment (rearward) over the wheel well.	$556
3100-0221	Driver half side tandem body with 30" wide forward and 30" wide rearward compartmentation.	$6,862
3100-0222	Driver half side tandem body with 42" wide forward and 42" wide rearward compartmentation.	$7,496
3100-0223	Driver half side tandem body with 60" wide forward and 54" wide rearward compartmentation.	$8,225
3100-0224	Driver 3/4 side tandem body with full height 30" wide forward and 30" wide rearward compartmentation. Includes (2) 51.5" wide compartments over the wheel well.	$7,946
3100-0225	Driver 3/4 side tandem body with full height 42" wide forward and 42" wide rearward compartmentation. Includes (2) 51.5" wide compartments over the wheel well.	$8,737
3100-0226	Driver 3/4 side tandem body with full height 60" wide forward and 54" wide rearward compartmentation. Includes (2) 51.5" wide compartments over the wheel well.	$9,646
3100-0227	Driver side tandem body with upper and lower compartmentation. Includes 30" wide forward and 30" wide rearward compartments and (4) opening upper compartments.	$11,641
3100-0228	Driver side tandem body with upper and lower compartmentation. Includes 42" wide forward and 42" wide rearward compartments and (4) opening upper compartments.	$12,913
3100-0229	Driver side tandem body with upper and lower compartmentation. Includes 60" wide forward and 54" wide rearward compartments and (4) opening upper compartments.	$14,394
3100-0230	Driver side tandem body with upper and lower compartmentation. Includes 30" wide forward and 30" wide rearward compartments and (4) opening upper compartments. Includes overhead rack opening centered between upper compartments.	$12,105
3100-0231	Driver side tandem body with upper and lower compartmentation. Includes 42" wide forward and 42" wide rearward compartments and (4) opening upper compartments. Includes overhead rack opening centered between upper compartments.	$13,428
3100-0232	Driver side tandem body with upper and lower compartmentation. Includes 60" wide forward and 54" wide rearward compartments and (4) opening upper compartments. Includes overhead rack opening centered between upper compartments.	$14,970
3100-0233	Driver side tandem body with full height 30" wide forward and 30" wide rearward compartmentation. Includes (2) 51.5" wide compartments over the wheel well.	$11,233
3100-0234	Driver side tandem body with full height 42" wide forward and 42" wide rearward compartmentation. Includes (2) 51.5" wide compartments over the wheel well.	$12,503
3100-0235	Driver side tandem body with full height 60" wide forward and 54" wide rearward compartmentation. Includes (2) 51.5" wide compartments over the wheel well.	$13,955
3100-0236	Driver side tandem body with full height 30" wide forward and 30" wide rearward compartmentation. Includes (2) 42" wide compartments over the wheel well and overhead rack opening centered between upper compartments.	$11,680
3100-0237	Driver side tandem body with full height 42" wide forward and 42" wide rearward compartmentation. Includes (2) 42" wide compartments over the wheel well and overhead rack opening centered between upper compartments.-	$13,002
3100-0238	Driver side tandem body with full height 60" wide forward and 54" wide rearward compartmentation. Includes (2) 42" wide compartments over the wheel well and overhead rack opening centered between upper compartments.	$14,514
3100-0243	Driver side body with full height 42" wide forward and 50" wide rearward compartmentation. Includes (1) 56" wide compartment over the wheel well.	$10,527
3100-0244	Driver half side tandem body with with 42" wide forward and one rearward area for locating of side tank dump rearward of the wheel well.	$7,759
3100-0245	Driver side body with full height 60" wide forward and 56" wide rearward compartmentation. Includes (1) 56" wide compartment over the wheel well. Side Mount eMAX only.	$12,302
3100-0246	Driver side body with upper and lower compartmentation. Includes 36" wide forward and 31" wide rearward lower compartments and (2) opening upper compartments.	$9,795
3100-0247	Driver side body with full height 46" wide forward and 56" wide rearward enhanced extended compartmentation. Includes (1) 56" wide compartment over the wheel well. L1 compartment to be Rescue Pumper style individual compartments.	$12,845
3100-0248	Driver side body with full height 50" wide forward and 50" wide rearward compartmentation. Includes (1) 56" wide compartment over the wheel well.	$12,302
3100-0249	Driver side body with full height 36" wide forward and 50" wide rearward compartmentation. Includes (1) 56" wide compartment over the wheel well.	$9,795
3100-0250	Driver side body with full height 60" wide forward and 62" wide rearward enhanced extended compartmentation. Includes (1) 56" wide compartment over the wheel well.	$13,528

3100-0251	Driver side body with full height 60" wide forward and 42" wide rearward compartmentation. Includes (1) 33" wide compartment over the wheel well and (1) Zico Overhead Portable Tank Rack. Rack to hold (1) 3000 gallon portable tank.	$17,146
3100-0252	Driver side body with full height 42" wide forward and 56" wide rearward enhanced extended compartmentation. Includes (1) 56" wide compartment over the wheel well.	$12,093
3100-0253	Driver full height side body with (3) full height, rescue style, forward compartments (39" and 39" wide and rearward of wheel well 24" wide),(1) upper compartment over the wheel well 56" wide.	$8,954
3100-0254	Driver side body with upper and lower compartmentation. Includes 48" wide forward and 62" wide enhanced extended rearward lower compartments and (3) opening upper compartments.	$12,178
3100-0257	Driver side body with full height 36" wide forward and 50" wide rearward enhanced extended compartmentation. Includes (1) 33" wide compartment over the wheel well and (1) Zico Overhead Ladder Rack.	$16,202
3100-0259	Driver side diamond plate roof top compartment. Includes smooth plate painted vertical hinged access door at the rear with push button latch to be wired to door ajar indicator in cab.	$1,452
3100-0260	Driver side body with full height 36" wide forward and 45" wide rearward compartmentation. Includes (1) 56" wide compartment over the wheel well.	$10,787
3100-0262	Driver side body with full height 32" wide forward and 50" enhanced extended rearward compartmentation. Includes (1) 56" wide compartment over the wheel well.	$8,502
3100-0263	Driver side body with full height 54" wide forward and 48" wide rearward compartmentation. Includes (1) 56" wide compartment over the wheel well. Side Mount eMAX only.	$11,531
3100-0264	Driver side body with full height 26" and 56" wide forward compartments and 56" wide rearward compartmentation. Includes (1) 56" wide compartment over the wheel well. Side Mount eMAX only.	$13,584
3100-0265	Driver side diamond plate roof top compartment. Includes (2) hinged lift-up access doors with turn latches and grab handle(s) and (1) vertical hinged access door at the rear with push button latch to be. Each lid to have (1) bracket mounted LED light and to be wired to door ajar indicator in cab.	$2,092
3100-0266	Driver side body with full height/full depth 60" wide front and 54" wide rear compartment. Includes (1) 60" wide compartment over the wheel well. Side mount SS eMAX only.	$15,009
3100-0267	Driver side tandem body with upper and lower compartmentation. Includes 60" wide forward and 54" wide rearward compartments and (1) opening forward upper compartment with painted panels rearward.	$15,405
3100-0270	Rear aluminum smooth plate painted job color vertical hinged door on driver side roof top compartments. Includes thumb latch and wiring for door ajar switch.	$200
3100-0271	Stainless steel driver side body with full height/full depth 36" wide front and 48" rear for reverse hinge compartment L1 door. Includes 54" wide compartment above rear wheels.	$26,224
3100-0273	Driver side ERV style roof top compartment contents: (2) 6" x 10' hard suction hoses (not included) stored vertical. Includes vertical partition around hard suction hoses.	$993
3100-0274	Driver side body with full height 36" wide forward and 56" wide rearward enhanced extended compartmentation. Includes (1) 56" wide compartment over the wheel well. Rescue Pumper individual style compartments.	$12,791
3100-0275	Driver side tandem body with upper and lower compartmentation. Includes 30" wide forward and 54" wide rearward compartments and (4) opening upper compartments. Includes offseting upper compartments forward due to deck gun location and access panel on upper rear compartment face to deck gun piping.	$12,920
3100-0276	(1) driver side roof top compartment forward of hard suction storage area and (2) roof top comaprtments over hard suction storage area. Includes hinged raised compartment lids with turn latches and grab handle(s). The lids to have (1) bracket mounted LED light and to be wired to door ajar indicator in cab. Includes partition between roof top compartment and hard suction storage area. Floor to be provided above the hard suction storage area to use remaining area above.	$2,750
3100-0277	Driver side tandem body with 60" wide forward and 54" wide rearward compartmentation. Forward compartment to be full height, rearward to be half height.	$10,135
3100-0278	Driver side body with full height 26" and 56" wide forward compartments and 56" wide rearward compartmentation. Includes (1) 56" wide compartment over the wheel well and one (1) storage tunnel. Side Mount eMAX only.	$16,214
3100-0279	Driver side body with full height 54" wide forward and 36" wide rearward compartmentation. Includes (1) 56" wide compartment over the wheel well. Side Mount eMAX only.	$11,126
3100-0280	Driver side roof top assembly. Does not include external upper doors or internal platework. External framework and platework only.	$1,459
3100-0281	Driver side body with full height 36" wide forward and 36" wide rearward compartmentation. Includes (1) 56" wide compartment over the wheel well and 30 degree rear body angle for greater angle of departure. L1 compartment to be Rescue Pumper style individual compartments.	$11,093
3100-0282	Driver full height side body with 66" wide forward and 42" wide rearward compartmentation. Includes (1) 56" wide compartment over the wheel well. For use with custom chassis only.	$9,129
3100-0283	Driver half side body with (2) forward compartments (48" and 30" wide) and one rearward area for locating of side tank dump. Includes (1) 20" wide compartment above the lower forward comaprtment.	$5,021
3100-0285	Driver side tandem body with full height 42" wide forward and 59" wide rearward compartmentation. Includes (2) 51.5" wide compartments over the wheel well.	$14,226
3100-0288	Stainless steel driver side body with full height 54" wide front and 54" rear with reduced upper depth for "T" tank. Includes 54" wide compartment over rear wheels.	$26,056
3100-0289	Stainless steel driver side body with full height 48" wide forward and 70" wide rearward enhanced extended compartmentation. Includes (1) 54" wide compartment over the wheel well.	$27,672

3100-0290	Driver side body with full height 48" wide forward and 48" wide rearward compartmentations. Includes (1) 56" wide compartment over the wheel well and one (1) storage tunnel. Tunnel to be behind L2 and L3 compartments only. L1 compartment to be full depth, full height with notch in upper rearward wall and boxed in cover for hard suction.	$15,576
3100-0291	Driver side body with full height 48" wide forward and 48" wide rearward compartmentation. Includes (1) 56" wide compartment over the wheel well and one (1) storage tunnel. Tunnel to be behind L2 and L3 compartments only. L1 compartment to be full depth, full height with notch in upper rearward wall and boxed in cover for hard suction.	$15,581
3100-0292	Stainless steel driver side body high side 60" front and 60" rear. Five compartments, tandem axle. For use with single arm overhead portable tank rack.	$17,321
3100-0293	Driver side tandem body with upper and lower compartmentation. Includes 30" wide forward and 54" wide rearward compartments and (4) opening upper compartments. Includes offseting upper compartments forward due to deck gun location and access panel on upper rear compartment face to deck gun piping.	$12,920
3100-0294	Driver side standard width roof top compartment contents: (2) 6" x 10' hard suction hoses (not included) stored vertical. The hard suction storage shall have a front wall which will prevent the hoses from sliding too far forward while also creating a full depth coffin storage area forward of the wall..	$315
3100-0295	Driver side body with full height 26" and 56" wide forward compartments and 56" wide rearward compartmentation. Includes (1) 56" wide compartment over the wheel well.	$13,584
3100-0296	Driver side body with full height 26" and 56" wide forward compartments and 56" wide rearward compartmentation. Includes (1) 56" wide compartment over the wheel well and one (1) storage tunnel.	$16,214
3100-0298	Stainless steel driver side short Boston style body with low height 36" front and 40" rear and (2) lift-up doors above. Includes 60" wide fender panel. For use with optional suicide hinged L1 door.	$25,176
3100-0299	Driver side tandem body with full height (1) 60" wide forward and (1) 60" wide rearward compartmentation. For use with Rear Mount pump.	$17,276
3100-0300	Driver side body with full height/full depth 60" wide front and 54" wide rear compartment. Includes (1) 60" wide compartment over the wheel well. Top mount SS eMAX only.	$15,009
3100-0301	Stainless steel driver side body with full height 60" wide forward and 60" wide rearward compartmentation. Includes (1) 54" wide compartment over the wheel well.	$30,511
3100-0302	Stainless steel driver side body with full height 48" wide forward and 58" wide rearward enhanced extended compartmentation. Includes (1) 60" wide compartment over the wheel well.	$26,705
3100-0303	Stainless steel driver side body with full height 48" wide forward and 54" wide rearward compartmentation. Includes (1) 54" wide compartment over the wheel well.	$25,742
3100-0304	Driver side tandem body with (2) 34" wide forward and 54" wide rearward compartmentation. Forward compartments to be full height, rearward to be half height.	$11,291
3100-0305	(1) driver side roof top compartment (no divider). Includes (2) hinged raised compartment lids with turn latches and grab handle(s). Each lid to have (1) bracket mounted LED light and to be wired to door ajar indicator in cab.	$2,496
3100-0306	(2) driver side roof top compartments with removable floors and extra width to inboard side. Includes hinged raised compartment lids with turn latches, grab handle(s) and gas shock hold open and drain line(s) ran to below body. Each lid to have (1) bracket mounted LED light and to be wired to door ajar indicator in cab.	$6,222
3100-0307	(2) Driver side roof top compartments. Includes hinged raised aluminum smooth plate with black Scorpion coating (IPOS diamond plate) compartment lids with turn latches and grab handle(s). Each lid to have (1) bracket mounted LED light and to be wired to door ajar indicator in cab.	$2,814
3100-0308	Driver side body with full height 60" wide forward and 54" wide rearward compartmentation. Includes (1) 60" wide compartment over the wheel well. Top mount SS eMAX only.	$18,257
3100-0309	Driver side body with full height 30" and 60" wide forward compartments and 54" wide rearward compartmentation. Includes (1) 60" wide compartment over the wheel well. Side mount SS eMAX only.	$16,573
3100-0310	Driver side body with full height 30" and 60" wide forward compartments and 54" wide rearward compartmentation. Includes (1) 60" wide compartment over the wheel well, and a storage tunnel. Side mount SS eMAX only.	$19,781
3100-0311	Driver side body with full height 30" and 60" wide forward compartments and 54" wide rearward compartmentation. Includes (1) 60" wide compartment over the wheel well. Top mount SS eMAX only.	$16,573
3100-0312	Driver side body with full height 30" and 60" wide forward compartments and 54" wide rearward compartmentation. Includes (1) 60" wide compartment over the wheel well, and a storage tunnel. Top mount SS eMAX only.	$19,781
3100-0313	Driver side body with full height 50" wide forward and 42" wide rearward compartmentation. Includes (1) 56" wide compartment over the wheel well. Rear perimeter or body raised 3" for improved departure angle. Side Mount eMAX only.	$11,126
3100-0314	Driver full height side body with upper and lower compartmentation. Includes 42" wide forward and 56" wide rearward lower enhanced compartmentation and (3) opening upper compartments. For use with ladder storage in the hosebed	$10,880
3100-0316	Stainless steel driver side body with rescue style full height 30" front, 40" rear and 60" wide fender panel L2 compartment. For use with suicide hinged L1 door (if applicable).	$25,176
3100-0317	Horizontal partition located in driver side roof top compartment over DOT bottles. Floor to be provided above the DOT bottles to use remaining area above.	$872
3100-0318	Driver side body with full height 48" wide forward and 56" wide rearward enhanced extended compartmentation. Includes (1) 56" wide compartment over the wheel well.	$12,322

3100-0319	Driver side roof top compartment contents: (1) 10' hard suction hose (not included) stored horizontal. Includes stop bracket rearward of hard suction hoses and Nylatron compartment flooring.	$500
3100-0320	(2) driver side roof top compartments with extra width to inboard side. Includes hinged raised compartment lids with turn latches, grab handle(s) and gas shock hold open and drain line(s) ran to below body. Each lid to have (1) bracket mounted LED light and to be wired to door ajar indicator in cab. Compartment lid construction shall be aluminum smooth plate IPO diamond plate painted Black Scorpion (rough finish).	$5,366
3100-0321	Driver side body with upper and lower compartmentation. Includes 42" wide forward and 42" wide rearward lower compartments, (3) opening upper compartments with portable water tank storage with access door at rear. Smooth plate compartment top painted black durabak.	$11,220
3100-0322	Driver 3/4 side body with (3) full height, rescue style, (2) forward compartments (48" and 30" wide) and (1) rearward compartment (24"). Includes (1) 56" wide compartment over the wheel well.	$7,552
3100-0323	Driver 3/4 side tandem stainless steel body with 35" front and 35" rear for flat back body design. Includes (2) 42" wide compartments over rear tandem wheels, with side dump valve between.	$11,255
3100-0324	Driver side roof top compartment. Includes vertically hinged access door at the rear with push button latch to be wired to door ajar indicator in cab.	$1,452
3100-0325	(2) driver side roof top compartments with extra width to inboard side. Includes hinged raised compartment lids with turn latches, grab handle(s) and gas shock hold open and drain line(s) ran to below body. Each lid to have (2) bracket mounted LED lights and to be wired to door ajar indicator in cab.	$5,076
3100-0326	Driver side tandem body with upper and lower compartmentation. Includes 30" wide forward and 30" wide rearward compartments and (4) opening upper compartments.	$12,388
3100-0327	Driver side body with full height 50" wide forward and 42" wide rearward compartmentation. Includes (1) 56" wide compartment over the wheel well. Rear perimeter or body raised 3" for improved departure angle.	$11,126
3100-0329	Stainless steel driver side body with full height 48" wide forward and 48" wide rearward compartmentation. Includes (1) 54" wide compartment over the wheel well.	$26,309
3100-0330	Driver 1/2 side tandem stainless steel tanker body with 60" front and 60" rear for flat back body design. Includes (2) 55" wide tandem wheel fender panels.	$12,805
3100-0331	Driver side body with full height 24" wide forward and 36" wide rearward compartmentation. Includes (1) 56" wide compartment over the wheel well. Rear bottom corner of truck will be angled 30 degrees for a greater rear angle of departure.	$9,341
3100-0332	Driver side body with full height 36" wide forward and 62" wide rearward enhanced extended compartmentation. Includes (1) 56" wide compartment over the wheel well.	$11,674
3100-0333	Driver full height side body with 36" wide forward and 48" wide rearward compartmentation. Includes (2) 38" wide compartments over the wheel well and one forward area for side tank dump. For use with custom chassis only.	$9,333
3100-0334	Driver side tandem body with full height 30" wide forward and 30" wide rearward compartmentation. Includes (2) 51.5" wide compartments over the wheel well.	$12,235
3100-0335	Driver side body with full height 48" wide forward and 48" wide rearward compartmentation. Includes (1) 56" wide compartment over the wheel well. Compartment material to be 5083-H321.	$12,200
3100-0336	Driver full height side body with 42" wide and 20" wide forward compartments and 42" wide rearward compartment. Includes (1) 56" wide compartments over the wheel well. For use with custom chassis only.	$9,333
3100-0337	Driver side body with full height 48" wide forward and 54" wide rearward compartmentation. Includes (1) 56" wide compartment over the wheel well.	$11,702
3100-0339	Driver 3/4 side body with upper and lower compartmentation. Includes 42" wide forward and 42" wide rearward lower compartments and (2) opening upper compartments.	$6,687
3100-0340	Driver side ERV body with full height 37" forward and 52" rearward. Includes (1) 56" wide compartment over the wheel well. Includes (2) roof top compartments with hinged raised lids with thumb latches, grab handle(s), and gas shock hold open and drain line(s) ran to below body.Eack lid to have (1) bracket mounted LED light and to be wired to door ajar indicator in cab.	$17,858
3100-0341	Driver side body with full height 24" wide forward and 36" wide rearward compartmentation. Includes (1) 56" wide compartment over the wheel well.	$9,341
3100-0342	Driver side body with full height 38" wide forward and 56" wide rearward compartment. Includes (1) 56" wide compartment over the wheel well.	$11,569
3100-0343	(2) Driver side roof top compartments. Includes hinged raised compartment lids with thumb latches and grab handle(s). Each lid to have (1) bracket mounted LED light and to be wired to door ajar indicator in cab.	$2,496
3100-0344	Driver half side tandem body with (2)41" wide forward and (2)32" wide rearward compartmentation.	$11,110
3100-0345	Stainless steel driver side body with full height 48" wide forward and 54" wide rearward compartmentation. Includes (1) 60" wide compartment over the wheel well.	$11,178
3100-0346	Stainless steel driver side body with full height 40" wide forward and 40" wide rearward compartmentation with reduced upper depth. Includes (1) 60" wide compartment over the wheel well.	$9,114
3100-0347	Stainless steel driver side body with full height/full depth 40" wide forward and 48" wide rearward compartmentation. Includes (1) 60" wide compartment over the wheel well.	$24,904
3100-0349	Driver side roof top compartment contents: (1) 12'-14'+ hard suction hose (not included) stored horizontal. Includes Nylatron compartment flooring. Length of capacity depends on body configuration.	$582

3100-0350	Notch compartment L1 in forward ceiling area to allow for hose bed preconnect piping to route down into pump module.	$382
3100-0351	Driver side body with full height 48" wide forward and 62" wide rearward compartmentation. Includes (1) 56" wide compartment over the wheel well.	$11,581
3100-0352	Stainless steel driver side body with full height 48" wide forward and 58" wide rearward enhanced extended compartmentation. Includes (1) 60" wide compartment over the wheel well.	$26,705
3100-0354	Driver side body with full height 54" wide forward and 48" wide rearward compartmentation. Includes (1) 56" wide compartment over the wheel well. Top Mount eMAX Only.	$11,531
3100-0355	(2) driver side roof top compartments with extra width to inboard side. Includes hinged raised compartment lids with turn latches, grab handle(s) and gas shock hold open and drain line(s) ran to below body. Each lid to be wired to door ajar indicator in cab.	$4,864
3100-0356	(2) driver side roof top compartments with extra width to inboard side. Includes hinged raised compartment lids with turn latches, grab handle(s) and gas shock hold open and drain line(s) ran to below body. Each lid to have (1) bracket mounted LED light and to be wired to door ajar indicator in cab.	$4,988
3100-0357	Driver 3/4 height side body with 20" wide and 42" wide forward compartments and 42" wide rearward compartment. Includes (1) 56" wide compartments over the wheel well. For use with custom chassis only.	$7,512
3100-0358	Driver side body with full height 42" wide forward and 56" wide rearward compartmentation. Includes (1) 56" wide compartment over the wheel well.	$12,093
3100-0359	Stainless steel driver side tanker body high side 52" front and 52" rear rescue style, with Lord/coil spring torsion style body mounts. Four compartments, tandem axle.	$19,332
3100-0360	Stainless steel driver side special tall body with full height 40" wide forward and 58" wide rearward enhanced extended compartmentation. Includes (1) 54" wide compartment over the wheel well.	$25,742
3100-0361	Stainless steel driver side body with full height/full depth 48" wide forward and 48" wide rearward compartmentation. Includes (1) 54" wide compartment over the wheel well.	$26,309
3100-0362	Driver side body with full height 50" wide forward and 36" wide rearward compartmentation. Includes (1) 56" wide compartment over the wheel well. Rear perimeter or body raised 4" for improved departure angle.	$10,736
3100-0364	Stainless steel driver side body with full height 40" wide forward and 58" wide rearward enhanced extended compartmentation. Includes (1) 60" wide compartment over the wheel well.	$25,542
3100-0365	Driver 3/4 side body with full height 24" wide forward and 36" wide rearward compartmentation. Includes (1) 56" wide compartment over the wheel well.	$5,126
3100-0366	(2) driver side roof top compartments. Includes hinged raised compartment lids with slam style D-ring latches and no grab handles. Each lid to have (1) bracket mounted LED light and to be wired to door ajar indicator in cab.	$2,615
3100-0367	Driver side body with upper and lower compartmentation. Includes 42" wide forward and 42" wide rearward lower compartments and (2) opening upper compartments.	$10,453
3100-0368	Driver side body with full height 26" and 30" wide forward compartments and 56" wide rearward compartmentation. Includes (1) 56" wide compartment over the wheel well. Side Mount eMAX only.	$13,584
3100-0369	Driver side body with full height 60" wide forward and 42" wide rearward compartmentation. Includes (1) 33" wide compartment over the wheel well and (1) Zico Overhead Portable Tank Rack. Rack to hold (1) 2100 gallon portable tank.	$17,146
3100-0370	Driver side body with full height 42" wide forward and 42" wide rearward compartmentation. Includes (1) 56" wide compartment over the wheel well.	$10,545
3100-0371	Stainless steel driver side body with full height 40" wide forward and 58" wide rearward extended compartmentation. Includes (1) 60" wide compartment over the wheel well	$25,274
3100-0372	Driver side smooth plate roof top compartment and paited black Durabak. Includes smooth plate vertically hinged access door at the rear with push button latch and painted job color to be wired to door ajar indicator in cab.	$1,816
3100-0373	(2) driver side roof top compartments with extra width to inboard side. Includes hinged raised compartment lids with turn latches, grab handle(s) and gas shock hold open and drain line(s) ran to below body. Each lid to have (1) Amdor LED strip light and to be wired to door ajar indicator in cab.	$5,697
3100-0374	Driver side roof top compartment contents: (2) 6" x 10' hard suction hoses (not included) stored horizontal side by side. Includes stop bracket rearward of hard suction hoses and partition over the hard suction hoses.	$993
3100-0375	(2) driver side roof top compartments. Includes hinged raised compartment lids with turn latches and grab handle(s). Each lid to have (1) bracket mounted LED light and to be wired to door ajar indicator in cab. Includes fixed floor with hard suction storage below accessible through hinged rear panel access door with bent D-ring latch.	$3,284
3100-0377	Driver side body with full height 42" and 40" wide forward compartments and 56" wide rearward compartmentation. Includes (1) 56" wide compartment over the wheel well. Side Mount eMAX only.	$14,073
3100-0379	Driver Full height forward compartment and 3/4 side rear of L1 tandem body with 42" wide forward and 42" wide rearward compartmentation. Includes (2) 51.5" wide compartments over the wheel well. Lowered W/Well for extra compt heigth. Side Dump Valves between Tandems N/A.	$13,139
3100-0380	(2) driver side roof top compartments. Includes hinged raised compartment lids with turn latches and grab handle(s). Each lid to have (3) bracket mounted EON LED lights and to be wired to door ajar indicator in cab.	$2,496

3100-0381	Driver side tandem body with upper and lower compartmentation. Includes (2) 28" wide forward and 54" wide rearward compartments and (1) opening forward upper compartment with painted panels rearward.	$15,906
3100-0383	Stainless steel driver side short Boston style body with low height 30" front and 40" rear and (2) lift-up doors above. Includes 60" wide fender panel. For use with optional suicide hinged L1 door.	$24,013
3100-0384	Driver side tandem body with upper and lower compartmentation. Includes 60" wide full height forward and 54" wide half height rearward compartments and (1) opening forward upper compartment with painted panels rearward.	$15,910
3100-0385	(2) Driver side roof top compartments with extra width to inboard side. Includes hinged raised compartment lids with turn latches, grab handle(s) and gas shock hold open and drain line(s) ran to below body. Each lid to have (1) bracket mounted LED light and to be wired to door ajar indicator in cab. Forward compartment to have standard floor. Rearward compartment shall be stepped at inboard side for a 26" deep section approximately 8.5" wide in order to stow a stokes basket on edge. Forward and rearward compartments to have a dividing wall between them to secure the different floor configurations. Stokes basket to be stored shall be a Ferno 71-M basket or similar in size.	$5,847
3100-0386	Driver side rear mount pumper body with full height 48" wide forward and 60" wide rearward compartmentation. Includes (1) 56" wide compartment over the wheel well and one (1) storage tunnel and access door at rear.	$16,006
3100-0387	Driver side body with full height 60" wide forward and 48" wide rearward compartmentation. Includes (1) 56" wide compartment over the wheel well. Side Mount eMAX only.	$12,302
3100-0388	(2) driver side roof top compartments for instillation of DOT/ASME bottles. Includes hinged raised compartment lids with turn latches and grab handle(s). Each lid to have (1) bracket mounted LED light and to be wired to door ajar indicator in cab.	$2,496
3100-0389	Driver side body with full height 34" and 48" wide forward compartments and 56" wide rearward compartmentation. Includes (1) 56" wide compartment over the wheel well. Side Mount eMAX only.	$14,073
3100-0390	Driver side body with full height 30" wide forward and 44" wide rearward compartmentation. Includes (1) 56" wide compartment over the wheel well.	$10,221
3100-0391	Stainless steel driver side body with full height/full depth 60" wide forward and 60" wide rearward compartmentation. Includes (1) 60" wide compartment over the wheel well.	$28,459
3100-0393	Stainless steel driver side body with full height 48" wide forward and 40" wide rearward compartmentation. Includes (1) 60" wide compartment over the wheel well.	$25,971
3100-0394	Driver side rear mount rescue pumper body with full height 38" wide forward and 42" wide rearward compartmentation. Includes (1) 56" wide compartment over the wheel well and 30 degree angled rear body for improved angle of departure.	$11,569
3100-0395	Driver full height body side with (1) 48" wide, Full Height forward compartment, (1) 30" wide, lower forward compartment adjacent to w/well, (2) upper compartments (57" wide each), the rearward upper having a rear compartment face access door for portable tank storage, and (1) lower rearward compartment (24") to rear of the w/well.	$10,644
3100-0396	Stainless steel driver side body with full height 54" wide forward and 48" wide rearward compartmentation. Includes (1) 60" wide compartment over the wheel well.	$28,414
3100-0398	(2) side low profile stepped interior roof top compartments with extra width to inboard side. Includes hinged raised compartment lids with turn latches,gas shock hold opens and drain line(s) ran to below body. Each lid to have (1) bracket mounted LED light and to be wired to door ajar indicator in cab. Lids shall be without grab handles for lowered OAH and shall have a stepped interior.	$5,090
3100-0399	Driver half side body with 42" wide forward and 56" wide rearward extended compartmentation. For use with a drop down ladder rack.	$5,599
3100-0400	Driver side body with upper and lower compartmentation. Includes 42" wide forward and 36" wide rearward lower compartments and (3) opening upper compartments.	$10,353
3100-0401	Driver side rear mount rescue pumper body with full height 60" wide forward and 44" wide rearward compartmentation. Includes (1) 56" wide compartment over the wheel well and 30 degree angled rear body for improved angle of departure.	$13,449
3100-0402	Driver side diamond plate roof top compartment. Includes smooth plate painted vertical hinged access door at the rear with D-Ring latch to be wired to door ajar indicator in cab.	$1,476
3100-0403	(1) driver side roof top compartment. Includes dual hard suction storage (over/under) accessible through hinged rear panel access door with trigger style latch. Includes (1) bracket mounted LED light and to be wired to door ajar indicator in cab. Includes fixed forward stop for 10' hard suction hoses .Lower hose stop to be positioned for use with a barrel type suction strainer attached.	$3,038
3100-0404	Stainless steel driver side body with full height 40" wide forward and 40" wide rearward compartmentation. Includes (1) 60" wide compartment over the wheel well.	$25,287
3100-0405	Driver side body with full height 30" wide forward and 60" wide rearward extended compartmentation. Includes (1) 56" wide compartment over the wheel well.	$10,489
3100-0406	Stainless steel driver side body with full height 30" front, 40" rear and 60" wide fender panel L2 compartment.	$24,064
3100-0407	Driver side body with full height 36" wide forward and 56" wide rearward compartmentation. Includes (1) 56" wide compartment over the wheel well. For use on low hosebed body and individual compartments on the driver side.	$12,791
3100-0408	L1 floor to have a cut-out rearward and near back wall for a recessed box as applicable to allow for 6000 psi DOT bottle to be located without interference.	$481
3100-0409	(2) driver side roof top compartments. Includes hinged raised compartment lids with turn latches and grab handle(s). Each lid to have (1) bracket mounted ROM V4 LED strip light and to be wired to door ajar indicator in cab.	$2,835

3100-0410	Driver side body with full height 34" and 30" wide forward compartments and 56" wide rearward compartmentation. Includes (1) 56" wide compartment over the wheel well. Side Mount eMAX	$14,107
3100-0411	Driver full height side body with (3) full height, rescue style, forward compartments (48" and 30" wide) and (1) rearward compartment (24" wide), (1) upper compartment (56" wide).	$8,880
3100-0412	Driver side body with full height 42 in. wide forward and 56 in. wide rearward enhanced extended compartmentation. Includes (1) 56 in. wide compartment over the wheel well. L1 compartment to be Rescue Pumper style full depth compartment.	$12,563
3100-0413	(2) driver side roof top compartments with extra width to inboard side. Compartment top and lids to be smooth plate painted black Durabak. Includes hinged raised compartment lids with turn latches, grab handle(s) and gas shock hold open and drain line(s) ran to below body. Each lid to have (1) bracket mounted LED light and to be wired to door ajar indicator in cab.	$6,234
3100-0414	Stainless steel driver side body with full height 48" wide forward and 48" wide rearward compartmentation. Includes (1) 60" wide compartment over the wheel well.	$30,511
3100-0415	(2) driver side roof top compartments. Includes hinged raised compartment lids with turn latches and grab handle(s). Each lid to have (1) bracket mounted ROM V4 LED strip light and to be wired to door ajar indicator in cab.	$2,835
3100-0416	Driver side body with full height 42in. wide forward and 62in. wide rearward enhanced extended compartmentation. Includes (1) 56in. wide compartment over the wheel well and one (1) storage tunnel.	$14,985
3100-0417	Driver side roof top compartment contents: (2) 6" x 10' hard suction hoses (not included) stored vertical.	$315
3100-0418	Driver half side tandem body with 60" wide forward and 48" wide rearward compartmentation.	$8,225
3100-0419	Driver side body with full height 60" wide forward and 56" wide rearward compartmentation. Includes (1) 56" wide compartment over the wheel well. Rear perimeter or body raised 3" for improved departure angle. Side Mount eMAX only.	$12,302
3100-0420	Drivers full height side body with 20" wide and 42" wide forward compartments and 42" wide rearward compartment. Includes (1) 56" wide compartments over the wheel well. For use with 30 high lower compt height only.	$9,333
3100-0421	Driver side body with full height 44" wide forward and 36" wide rearward compartmentation and 60.75" opening. Includes (1) 56" wide compartment over the wheel well and 28.75" opening .	$11,537
3105-0001	Enhanced extended forward compartmentation for Rescue Pumper. Includes 14" of additional interior width to the forward side compartments and 25" of additional depth in the forward 14" wide section (as applicable). Overall interior height will vary depending on additional option selections.	$2,083
3105-0002	Rear Mount forward body. Includes main side body structures and compartment L1/R1, L2/R2.	$14,181
3105-0005	Hosebed walkway. Includes forward body headboard mod and rear body module walkway end partition. Walkway to be a slip resistant material. Walkway located to [#LOC] of the hosebed.	$1,756
3105-0006	Rear Mount forward body compartments. Includes L1/R1 54" wide x 26" deep in the 56" lower area and 12" deep in the 12" upper area, L2/R2 56" wide x 26" deep in the 22" lower area and 12" deep in the 12" upper area.	$1,404
3105-0008	Rear Mount forward body. Includes main side body structures and compartment L1/R1, L2/R2 and a Zico overhead ladder rack (control located officer rear body/pump module).	$22,580
3105-0009	Rear Mount forward body compartments with driver side storage tunnel. Includes L1 - 72" wide x 26" deep in the 30" lower area and 12" deep in the 34" upper area, L2 - 56" wide x 12" deep, R1 - 72" wide x 26" deep in the 56" lower area and 12" deep in the 12" upper area, R2 - 56" wide x 26" deep in the 22" lower area and 12" deep in the 12" upper area.	$4,139
3105-0010	Rear Mount forward body. Includes main side body structures and compartment LT/RT, L1/R1, L2/R2. LT/RT (full width and 95" high) with lower storage areas (compartment opening 67" wide and same height as main body compartments). Includes full width forward storage pan and a pan in the rearward center/officer area between the driver roof top compartment. Transverse floor to run full width. Rear headboard to have area for routing of plumbing for preconnects located in rearward area. Area above preconnects (forward area) to be for storage of a stokes basket. L1/R1 54" wide x 26" deep in the 56" lower area and 12" deep in the 12" upper area, L2/R2 56" wide x 26" deep in the 22" lower area and 12" deep in the 12" upper area.	$28,887
3105-0011	Rear Mount forward body compartments with driver side storage tunnel. Includes L1 - 54" wide x 26" deep in the 30" lower area and 12" deep in the 38" upper area, L2 - 56" wide x 12" deep. R1 - 54" wide x 26" deep in the 56" lower area and 12" deep in the 12" upper area, R2 - 56" wide x 26" deep in the 22" lower area and 12" deep in the 12" upper area.	$1,404
3105-0014	Rear Mount forward body compartments. Includes L1/R1 - 60" wide x 26" deep in the 56" lower area and 12" deep in the 12" upper area, L2/R2 - 56" wide x 26" deep in the 22" lower area and 12" deep in the 12" upper area.	$2,317
3105-0015	Rear Mount forward body compartments. Includes L1/R1 - 66" wide x 26" deep in the 56" lower area and 12" deep in the 12" upper area, L2/R2 - 56" wide x 26" deep in the 22" lower area and 12" deep in the 12" upper area.	$3,229
3105-0016	Rear Mount forward body compartments. Includes L1/R1 - 72" wide x 26" deep in the 56" lower area and 12" deep in the 12" upper area, L2/R2 - 56" wide x 26" deep in the 22" lower area and 12" deep in the 12" upper area.	$4,139
3105-0017	Rear Mount forward body compartments with officer side Zico Overhead Ladder Rack. Includes L1/R1 - 54" wide x 26" deep in the 56" lower area and 12" deep in the 12" upper area, L2 - 56" wide x 26" deep in the 22" lower area and 12" deep in the 12" upper area, R2 - 33" wide x 26" deep in the 22" lower area and 12" deep in the 12" upper area (position of R2 depends on position of overhead ladder rack).	$1,404

3105-0018	Rear Mount forward body compartments with officer side Zico Overhead Ladder Rack. Includes L1/R1 - 60" wide x 26" deep in the 56" lower area and 12" deep in the 12" upper area, L2 - 56" wide x 26" deep in the 22" lower area and 12" deep in the 12" upper area, R2 - 33" wide x 26" deep in the 22" lower area and 12" deep in the 12" upper area (position of R2 depends on position of overhead ladder rack).	$2,317
3105-0019	Rear Mount forward body compartments with officer side Zico Overhead Ladder Rack. Includes L1/R1 - 66" wide x 26" deep in the 56" lower area and 12" deep in the 12" upper area, L2 - 56" wide x 26" deep in the 22" lower area and 12" deep in the 12" upper area, R2 - 33" wide x 26" deep in the 22" lower area and 12" deep in the 12" upper area (position of R2 depends on position of overhead ladder rack).	$3,229
3105-0020	Rear Mount forward body compartments with officer side Zico Overhead Ladder Rack. Includes L1/R1 - 72" wide x 26" deep in the 56" lower area and 12" deep in the 12" upper area, L2 - 56" wide x 26" deep in the 22" lower area and 12" deep in the 12" upper area, R2 - 33" wide x 26" deep in the 22" lower area and 12" deep in the 12" upper area (position of R2 depends on position of overhead ladder rack).	$4,139
3105-0022	Rear Mount forward body compartments with driver side storage tunnel. Includes L1 - 60" wide x 26" deep in the 30" lower area and 12" deep in the 38" upper area, L2 - 56" wide x 12" deep. R1 - 60" wide x 26" deep in the 56" lower area and 12" deep in the 12" upper area, R2 - 56" wide x 26" deep in the 22" lower area and 12" deep in the 12" upper area.	$2,317
3105-0023	Rear Mount forward body compartments with driver side storage tunnel. Includes L1 - 66" wide x 26" deep in the 30" lower area and 12" deep in the 38" upper area, L2 - 56" wide x 12" deep. R1 - 66" wide x 26" deep in the 56" lower area and 12" deep in the 12" upper area, R2 - 56" wide x 26" deep in the 22" lower area and 12" deep in the 12" upper area.	$3,229
3105-0025	Rear Mount forward body compartments with officer side storage tunnel. Includes L1 - 54" wide x 26" deep in the 56" lower area and 12" deep in the 12" upper area, L2 - 56" wide x 26" deep in the 22" lower area and 12" deep in the 12" upper area. R1 - 54" wide x 26" deep in the 30" lower area and 12" deep in the 38" upper area, R2 - 56" wide x 12" deep.	$1,404
3105-0026	Rear Mount forward body compartments with officer side storage tunnel. Includes L1 - 60" wide x 26" deep in the 56" lower area and 12" deep in the 12" upper area, L2 - 56" wide x 26" deep in the 22" lower area and 12" deep in the 12" upper area. R1 - 60" wide x 26" deep in the 30" lower area and 12" deep in the 38" upper area, R2 - 56" wide x 12" deep.	$2,317
3105-0027	Rear Mount forward body compartments with officer side storage tunnel. Includes L1 - 66" wide x 26" deep in the 56" lower area and 12" deep in the 12" upper area, L2 - 56" wide x 26" deep in the 22" lower area and 12" deep in the 12" upper area. R1 - 66" wide x 26" deep in the 30" lower area and 12" deep in the 38" upper area, R2 - 56" wide x 12" deep.	$3,229
3105-0028	Rear Mount forward body compartments with officer side storage tunnel. Includes L1 - 72" wide x 26" deep in the 56" lower area and 12" deep in the 12" upper area, L2 - 56" wide x 26" deep in the 22" lower area and 12" deep in the 12" upper area. R1 - 72" wide x 26" deep in the 30" lower area and 12" deep in the 38" upper area, R2 - 56" wide x 12" deep.	$4,139
3105-0030	Rear Mount forward body compartments w/dual storage tunnels. Includes L1/R1 - 54" wide x 26" deep in the 30" lower area and 12" deep in the 38" upper area, L2/R2 - 56" wide x 12" deep.	$1,404
3105-0031	Rear Mount forward body compartments w/dual storage tunnels. Includes L1/R1 - 60" wide x 26" deep in the 30" lower area and 12" deep in the 38" upper area, L2/R2 - 56" wide x 12" deep.	$2,317
3105-0032	Rear Mount forward body compartments w/dual storage tunnels. Includes L1/R1 - 66" wide x 26" deep in the 30" lower area and 12" deep in the 38" upper area, L2/R2 - 56" wide x 12" deep.	$3,229
3105-0033	Rear Mount forward body compartments w/dual storage tunnels. Includes L1/R1 - 72" wide x 26" deep in the 30" lower area and 12" deep in the 38" upper area, L2/R2 - 56" wide x 12" deep.	$4,139
3105-0034	Rear Mount forward body. Includes main side body structures and compartment L1/R1, L2/R2 and (1) storage tunnel.	$19,640
3105-0035	Rear Mount forward body. Includes main side body structures and compartment L1/R1, L2/R2 and (2) storage tunnels.	$23,784
3105-0036	Rear Mount forward body. Includes main side body structures and compartment LT/RT, L1/R1, L2/R2. LT/RT (full width and 95" high) with lower storage areas (compartment opening 67" wide and same height as main body compartments). Includes full width storage pan. Transverse floor to run full width. Rear headboard to have area for routing of plumbing for preconnects located in rearward area. The speedlay area to be stacked style and offset to rearward area of the transverse compartment. The upper speedlay area to hold (2) speedlay trays: (1) to hold - 200' of 2.5" DJ hose and (1) dry lay to hold - 100' of 1.75" DJ hose and 100' of 2.5" DJ hose. The lower speedlay area to hold (3) speedlay trays: (2) to hold 200' of 1.75" DJ hose each and (1) to hold 100' of 1.75" DJ hose. L1/R1 54" wide x 26" deep in the 56" lower area and 12" deep in the 12" upper area, L2/R2 56" wide x 26" deep in the 22" lower area and 12" deep in the 12" upper area.	$28,887
3105-0037	Transverse module (full width and height of the body) located forward of the body. Includes single 30" wide compartment opening per side (with a shallow lower area and a transverse upper area with full width smooth plate flooring). Upper area of transverse module to have diamond plate dunnage pan.	$10,554
3105-0038	Transverse module (full width and height of the body) located forward of the body. Includes single 36" wide compartment opening per side (with a shallow lower area and a transverse upper area with full width smooth plate flooring). Upper area of transverse module to have diamond plate dunnage pan.	$11,958
3105-0039	Transverse module (full width and height of the body) located forward of the body. Includes single 42" wide compartment opening per side (with a shallow lower area and a transverse upper area with full width smooth plate flooring). Upper area of transverse module to have diamond plate dunnage pan.	$13,361

3105-0040	Transverse module (full width and height of the body) located forward of the body. Includes single 50" wide compartment opening per side (with a shallow lower area and a transverse upper area with smooth plate flooring). Rearward transverse compartment area to have double preconnects with removable trays (side by side) and backboard storage (rearward of preconnects with velcro straps). Upper area of transverse module to have diamond plate dunnage pan.	$11,789
3105-0041	Transverse module (full width and height of the body) located forward of the body. Includes single 56" wide compartment opening per side (with a shallow lower area and a transverse upper area with smooth plate flooring). Rearward transverse compartment area to have double preconnects with removable trays (side by side) and backboard storage (rearward of preconnects with velcro straps). Upper area of transverse module to have diamond plate dunnage pan.	$13,192
3105-0042	Transverse module (full width and height of the body) located forward of the body. Includes single 62" wide compartment opening per side (with a shallow lower area and a transverse upper area with smooth plate flooring). Rearward transverse compartment area to have double preconnects with removable trays (side by side) and backboard storage (rearward of preconnects with velcro straps). Upper area of transverse module to have diamond plate dunnage pan.	$14,596
3105-0043	Transverse module (full width and height of the body) located forward of the body. Includes single 50" wide compartment opening per side (with a shallow lower area and a transverse upper area with smooth plate flooring). Rearward transverse compartment area to have triple preconnects with removable trays (side by side). Upper area of transverse module to have diamond plate dunnage pan.	$12,200
3105-0044	Transverse module (full width and height of the body) located forward of the body. Includes single 56" wide compartment opening per side (with a shallow lower area and a transverse upper area with smooth plate flooring). Rearward transverse compartment area to have triple preconnects with removable trays (side by side). Upper area of transverse module to have diamond plate dunnage pan.	$13,604
3105-0045	Transverse module (full width and height of the body) located forward of the body. Includes single 62" wide compartment opening per side (with a shallow lower area and a transverse upper area with smooth plate flooring). Rearward transverse compartment area to have triple preconnects with removable trays (side by side). Upper area of transverse module to have diamond plate dunnage pan.	$15,008
3105-0046	Transverse module (full width and height of the body) located forward of the body. Includes single 50" wide compartment opening per side (with a shallow lower area and a transverse upper area with smooth plate flooring). Rearward transverse compartment area to have double preconnects with removable trays (stacked). Upper area of transverse module to have diamond plate dunnage pan.	$12,067
3105-0047	Transverse module (full width and height of the body) located forward of the body. Includes single 56" wide compartment opening per side (with a shallow lower area and a transverse upper area with smooth plate flooring). Rearward transverse compartment area to have double preconnects with removable trays (stacked). Upper area of transverse module to have diamond plate dunnage pan.	$13,470
3105-0048	Transverse module (full width and height of the body) located forward of the body. Includes single 62" wide compartment opening per side (with a shallow lower area and a transverse upper area with smooth plate flooring). Rearward transverse compartment area to have double preconnects with removable trays (stacked). Upper area of transverse module to have diamond plate dunnage pan.	$14,874
3105-0049	Preconnect module (stacked) for use with aluminum speedlay trays. Includes area for (2) stacked preconnect, lower storage compartments with push button latches, running boards and upper area dunnage pan.	$10,554
3105-0051	Preconnect module to be capable of holding the following contents: Upper preconnect area to hold (1) 400' of 1.75" DJ with removable tray. Lower preconnect area to hold (1) 400' of 1.75" DJ with removable tray.	$824
3105-0052	Preconnect module to be capable of holding the following contents: Upper preconnect area to hold (2) 200' of 1.75" DJ with removable trays. Lower preconnect area to hold 200' of 2.5" DJ with removable tray.	$1,235
3105-0053	Preconnect module to be capable of holding the following contents: Upper preconnect area to hold (2) 200' of 1.75" DJ with removable trays. Lower preconnect area to hold (2) 200' of 1.75" DJ with removable trays.	$1,648
3105-0054	Rear Mount forward body. Includes main side body structures and compartment L1/R1, L2/R2.	$18,697
3105-0056	Preconnect module (stacked). Includes area for (2) stacked preconnect, lower storage compartments with push button latches, running boards, upper area dunnage pan and horizontal backboard storage with drop down diamond plate access door (wired to door ajar).	$7,808
3105-0057	Preconnect/Transverse module (full width and height of body). Includes (2) full width stacked speedlays (make standard size opening as used on normal width speedlay module). Each speedlay to be plumbed for use with 1.75" DJ hose. Area directly behind speedlays to have a transverse compartment (opening height to match body compartments). Transverse to include full width floor. Upper area to include a full width storage pan (forward of roof top compartments) and (1) pan located between the roof top compartments. Make pans as deep as practical.	$9,896
3105-0058	Transverse module (full width and height of the body) located forward of the body. Includes single 30" wide compartment opening per side (with a shallow lower area and a transverse upper area with smooth plate flooring). Lower transverse compartment area to have triple preconnects with removable trays (side by side). Above the speedlay area to be storage for stokes basket. Upper area of transverse module to have diamond plate dunnage pan.	$11,090
3105-0059	The outboard panels of the full width transverse module to be smooth plate overlays. These areas are to be seamless and painted job color.	$288

3105-0060	Transverse module (full width and height of the body) located forward of the body. Includes single 30" wide compartment opening per side (with a shallow lower area and a transverse upper area with smooth plate flooring). Rearward transverse compartment area to have triple preconnects with removable trays (stacked, (2) 1.5" on top and (1) 2.5" on bottom). Upper area of transverse module to have diamond plate dunnage pan.	$12,200
3105-0061	Backboard storage sleeve with retaining strap. Located in LT/RT compartment forward of the speedlays to be 5" wide x 20" high.	$896
3105-0062	Rear Mount body. Includes main side body structures and compartments L1/R1, L2/R2, L3/R3 and L4/R4. Includes interior compartment offset for pump panel location and mounting, rear body structure for rear mounted pump application.	$34,557
3105-0066	Rear Mount forward body compartments. Includes L1/R1 - 72" wide x 26" deep in the 56" lower area and 12" deep in the 12" upper area, L2/R2 - 56" wide x 26" deep in the 22" lower area and 12" deep in the 12" upper area. An externally-mounted compartment top shall be provided and constructed of a 1/8" (.125") aluminum smooth plate with black Scorpion coating (IPOS diamond plate).	$4,457
3105-0067	Transverse module (full width and height of the body) located forward of the body. Includes single 30" wide compartment opening per side (with a shallow lower area and a transverse upper area with smooth plate flooring). Rearward transverse compartment area to have triple preconnects with removable trays (stacked, (2) 1.5" on top and (1) 2.5" on bottom). Upper area of transverse module to have a dunnage pan made of aluminum smooth plate with black Scorpion coating (IPOS diamond plate). The running boards shall be constructed of aluminum smooth plate with black Scorpion coating (IPOS diamond plate)	$12,755
3105-0068	Preconnect module to be capable of holding the following contents: Upper preconnect area to hold (2) 200' of 1.75" DJ with removable poly trays. Lower preconnect area to hold 200' of 2.5" DJ with removable poly tray.	$1,235
3105-0069	Preconnect module (stacked)for use with Poly trays. Includes area for (2) stacked preconnect, lower storage compartments with push button latches, running boards and upper area dunnage pan.	$10,994
3105-0071	Rear Mount forward body compartments. Includes L1/R1 - 44" wide x 26" deep in the 56" lower area and 12" deep in the 12" upper area, L2/R2 - 44" wide x 26" deep in the 56" lower area and 12" deep in the 12" upper area, L3/R3 - 56" wide x 26" deep in the 22" lower area and 12" deep in the 12" upper area, L4 - (pump panel location upper section) - 46" wide x 24" high x 24" deep in the lower section and R4 - 46" wide x 24" deep in the 56" lower area and 12" deep in the 12" upper area.	$35,212
3110-0000	Center Slam Strip Rear End with (3) compartments- (2) lower and (1) upper and a diamond plate center strip for a Jet or Newton Dump application. Includes diamond plate panels.	$2,182
3110-0001	Center Slam Strip Rear End with (3) compartments- (2) lower and (1) upper and a smooth plate center strip for a Jet or Newton Dump application. Includes smooth plate panels.	$2,182
3110-0002	Upper and Lower Rear Compartment. Includes diamond plate panels.	$1,682
3110-0003	Upper and Lower Rear Compartment. Includes smooth plate panels.	$1,682
3110-0004	Full Height Rear Compartment. Includes diamond plate panels.	$1,182
3110-0005	Full Height Rear Compartment. Includes smooth plate panels.	$1,182
3110-0006	Full Height Rear Compartment with Upper Ladder Storage Compartment. Includes smooth plate panels. Includes area for storage of (1) 24', (1) 14', (1) 10' Attic, (2) pike poles and a drop down storage access door with push button latches (wire to door ajar).	$2,014
3110-0007	Full Height Rear Compartment. Includes diamond plate panels, 30 degree angle of departure with flip down tailboard and handrails- (2) vertically on trailing edge of body and horizontally mounted handrail(s) below hosebed.	$2,579
3110-0008	Full Height Rear Compartment. Includes smooth plate panels, angled rear body with flip down tailboard and handrails- (2) vertical on trailing edge of body and horizontal mounted handrail(s) below hosebed.	$2,579
3110-0010	Full Height Rear Compartment with Upper Ladder Storage Compartment. Includes area for storage of (1) 24', (1) 14', (1) 10' Attic, (2) pike poles and a drop down storage access door with push button latches (wire to door ajar).	$2,014
3110-0011	Full Height Rear Compartment with Upper Storage Compartment and Officer Side Storage Tunnel. Includes smooth plate panels and storage access doors with push button latches.	$2,095
3110-0012	Full Height Rear Compartment with Upper Storage Compartment and Officer Side Ladder Tunnel. Includes diamond plate panels and storage access doors with push button latches.	$2,095
3110-0013	Full Height Rear Compartment with Officer Side Storage Tunnel. Includes smooth plate panels and storage access door with push button latch.	$1,098
3110-0014	Full Height Rear Compartment with Officer Side Ladder Tunnel and Recessed Traffic Advisor. Includes smooth plate panels and storage door with push buton latch..	$1,453
3110-0015	Full Height Rear Compartment with Officer Side Storage Tunnel. Includes diamond plate panels and storage access door with push button latch.	$1,065
3110-0016	Full Height Rear Compartment with Officer Side Ladder Tunnel and Recessed Traffic Advisor. Includes diamond plate panels and storage door with push button latch.	$1,453
3110-0017	Full Height Rear Compartment with diamond plate panels.	$985
3110-0018	Full Height Rear Compartment with smooth plate panels.	$985
3110-0019	Full Height Rear Compartment with recessed traffic advisor and smooth plate panels.	$1,374
3110-0020	Full Height Rear Compartment with recessed traffic advisor and diamond plate panels.	$1,374
3110-0021	Rear mount rear end with upper storage area and lower pump panel. Includes 12" bolt-on tailboard, smooth plate panels and upper access area door with push button latches.	$1,633

3110-0023	Rear mount rear end with upper storage area, lower pump panel area and officer side ladder/equipment tunnel. Includes 12" bolt-on tailboard, smooth plate panels, upper access area and ladder/equipment storage doors with push button latches.	$1,710
3110-0024	Stainless Steel rear end with lower center compartment. Includes 12" bolt-on diamond plate tailboard and handrails- (2) vertically on trailing edge of body and horizontally mounted handrail(s) below hosebed.	$2,331
3110-0025	Stainless steel rear end with lower center compartment.	$2,493
3110-0027	Rear of body to have un-painted extrusions with un-painted smooth plate body panels or just unpainted smooth plate to facilitate rear body striping.	$243
3110-0028	Rear body panels to be painted smooth plate.	$854
3110-0030	(2) bolt-on compartments. Locate (1) each side of B1. Each compartment includes a hinged diamond plate door (with 4" gap at top for connecting of hose stored in compartment) with D-Ring latch (wired into door ajar indicator), removable slat flooring and Gator Grip compartment top. Lower hosebed access step (one each side) to be mounted to inboard side of compartment.	$1,688
3110-0033	Single low rear compartment. For use with low hosebed. Includes diamond plate panels.	$886
3110-0035	Upper rear compartment depth to be approximately 25" deep.	$265
3110-0036	Upper and Lower Rear Compartment with Officer Side Ladder Tunnel. Includes diamond plate panels and storage access door with push button latches.	$2,619
3110-0037	Full Height Rear Compartment. Includes diamond plate panels, recessed traffic advisor and full width rear intermediate step located below the recessed advisor. B1 compartment to have no louvers. Includes access panel on bottom of compartment break to be 7" wide x 32" long. Panel to be centered front to back and side to side.	$2,158
3110-0038	Bolt-on diamond plate tailboard (full width of rear compartment). Includes the enhanced extended side compartment frame work with diamond plate compartment tops, (3) folding steps- (2) low and (1) high officer side with a 12" handrail (as applicable) and handrails- (2) vertically on trailing edge of body and horizontally mounted handrail(s) below hosebed.	$823
3110-0039	Bolt-on diamond plate tailboard (full width of body). Includes (2) handrails- (1) vertical on officer body and (1) horz below hosebed, aluminum ladder (angled) on offier side from tailboard to top edge of body and (3) Cast Products steps (staggered) on driver side.	$2,869
3110-0040	Compartment B1 to be 30" deep IPOS 26" deep.	$835
3110-0042	Single low rear compartment. For use with low hosebed. Includes smooth plate panels.	$941
3110-0043	Full Height Rear Compartment with Full Width Upper Storage Compartment. Includes officer side area for storage of (1) 10' Attic, (7) pike poles and a drop down storage access door with push buton latches (wire to door ajar). Includes driver side area for storage of backboards and a drop down storage access door with push buton latches (wire to door ajar). Includes (1) divider located 25" off officer's side wall. Includes diamond plate panels.	$2,395
3110-0044	Bolt-on diamond plate 10" tailboard (full width of body). Includes handrails- (2) mounted vertical on trailing edge of body and horizontal mounted handrail(s) below hosebed.	$992
3110-0045	Upper and Lower Rear Compartment with Officer Side Ladder Tunnel. Includes smooth plate panels and storage access door with push button latches.	$2,619
3110-0046	Enhanced extended rear compartmentation for Rescue Pumper. Includes 14" of additional interior width to the rear side compartments and 25" of additional depth in the rearward 14" wide section. Overall interior height will vary depending on additional option selections.	$1,843
3110-0047	Full Height Rear Compartment with Full Width Upper Ladder Storage Compartment with smooth plate panels. Includes area for storage of (1) 24', (1) 14', (1) 10' Attic, (2) pike poles, (1) stokes basket, drop down storage access door with push button latches (wire to door ajar) and retaining straps for tunnel contents. Includes channels each side of ladder tunnel for discharges to terminate.	$3,020
3110-0048	Enhanced extended rear compartmentation for Rescue Pumper. Includes 14" of additional interior width to the rear side compartments and 25" of additional depth in the rearward 14" wide section. Overall interior height will vary depending on additional option selections. Includes bolt-on diamond plate tailboard (full width of rear compartment) and handrails- (2) vertically on trailing edge of body and horizontally mounted handrail(s) below hosebed.	$2,547
3110-0049	Bolt-on diamond plate tailboard (full width of rear compartment). Additional 10" of tailboard to run full width of body ("T" shaped tailboard). Includes the enhanced extended side compartment frame work with diamond plate compartment tops, (1) officer side lower area folding step. Driver side includes (1) upper hosebed mounted handrail (as applicable) and handrails- (2) vertical on trailing edge of body and horizontal mounted handrail(s) below hosebed.	$2,219
3110-0050	Upper Storage Compartment to hold (1) stokes basket in place of standard ladder components. Stokes basket to be located on officer side of storage tunnel. Stop bracket included.	$161
3110-0051	B1 compartment to have no door. Includes removal of compartment lights and door ajar.	$355
3110-0052	Bolt-on diamond plate tailboard (full width of rear compartment). Includes the enhanced extended side compartment frame work and handrails- (2) vertical on trailing edge of body and horizontal mounted handrail(s) below hosebed.	$1,057
3110-0053	Bolt-on diamond plate tailboard (full width of rear compartment). Additional 10" of tailboard to run full width of body ("T" shaped tailboard). Includes the enhanced extended side compartment frame work and handrails- (2) vertical on trailing edge of body and horizontal mounted handrail(s) below hosebed.	$2,219
3110-0054	Rear Mount Rear Body. Includes rear body side structures with compartment L3/R3, interior compartment offset for pump panel location and mounting, rear body structure for rear mounted pump application (includes painted job color smooth plate panels outboard of pump access/panel(s) and rear body hosebed.	$13,240
3110-0056	Compartment preconnect hose feed thru. Includes smooth plate doors with push button latches. Locate to [#LOC] just outboard of the rear pump panel.	$1,980

3110-0057	Lower Rear Compartment only. Upper section to be diamond plate panel. Includes diamond plate panels.	$1,022
3110-0060	Full Height Rear Compartment with Upper Ladder Storage Compartment. Includes diamond plate panels. Includes area for misc. storage and a drop down storage access door with push button latches (wire to door ajar).	$2,014
3110-0062	Upper Storage Compartment to hold (1) backboard in place of standard ladder components. Backboard to be located on officer side of storage tunnel. Includes stop bracket located at apporximately 80".	$286
3110-0063	Full Height Rear Compartment with Upper Storage Compartment. Includes smooth plate panels. Includes area for misc. storage and a drop down storage access door with push button latches (wire to door ajar).	$2,014
3110-0064	Upper Storage Compartment to have (1) bolt-in compartment 24" deep. Compartment for storage of misc. items. Includes holding center divider for lower hosebed short to allow room for compartment.	$568
3110-0065	Full Height Rear Compartment with Officer Side Ladder Tunnel. Includes officer side rear tunnel access door with latch (material to match rearend platework).	$1,098
3110-0066	Full Height Rear Compartment.	$985
3110-0067	Lower Rear Compartment only. Upper section to be diamond plate panel. Includes diamond plate panels. Additional diamond plate area just above compartment for mounting of recessed directional lightbar.	$5,673
3110-0068	Center Slam Strip Rear End with (3) compartments - (2) lower and (1) upper and a smooth plate center strip for a Jet or Newton Dump application. Includes smooth plate panels. Includes area above upper compartment for directional lightbar.	$4,506
3110-0069	Full Height Rear Compartment with Upper Storage Compartment and Officer Side Ladder Tunnel. Includes diamond plate panels and storage access doors with Tri-Mark model 030-1300 door latches. The upper tunnel to have on the officer side a stop at 128" and on the driver side a stop at 72" from rear of truck.	$2,549
3110-0070	Upper and Lower Rear Compartment. Includes smooth plate panels. B1 to be 36" wide due to enhanced extended feature and vertically hinged door(s).	$2,359
3110-0071	Spacer panel(s) for recess/warning lighting. Located:[#LOC]. Panel(s) tol be painted job color and to iinclude mounting area for any and all lighting mounted in area.	$276
3110-0073	Upper rear compartment depth to be approximately 29" deep.	$492
3110-0074	Full Height Rear Compartment with Officer Side Ladder Tunnel. Includes smooth plate panels and storage access door with push button latch. Includes a 18" channel for (2) tank inlets and (1) 5" jet dump located 16" up from bottom of compartment opening. Includes area above the channel for mounting of a booster reel. The lower opening to have double door and the upper opening to have a dutch door.	$4,484
3110-0075	Full Height Rear Compartment with Officer Side Ladder Tunnel. Includes diamond plate panels and storage access door with push button latch(es). Includes stepped upper horizontal tube to reduce hosebed height from ground over tank and driver side hosebed area.	$2,757
3110-0076	Full Height Rear Compartment with Officer Side Ladder Tunnel. Includes diamond plate panels and storage access door with D-ring latch.	$1,065
3110-0077	Provide modification to B1 officer side compartment opening. To include vertical extrusion and smooth plate panel with lower access door with push button latches for access to tow eye in compartment. Interior width of B1 to remain standard.	$1,235
3110-0078	Lower Rear Compartment only. Upper section to be smooth plate panel. Includes smooth plate panels.	$1,022
3110-0080	Center Slam Strip Rear End with smooth plate center strip for a Jet or Newton Dump application. Includes smooth plate low side panels and diamond plate upper panel.	$1,919
3110-0081	Full Height Rear Compartment with Officer Side Ladder Tunnel. Includes smooth plate panels and storage access door with D-ring latch.	$1,098
3110-0083	Half length offcir side tunnel. Reduces officer side upper compartment depths of R2 and R3 to 12" deep IPO 26".	$2,001
3110-0085	Upper and Lower Rear Compartment. Includes upper and lower sanded smooth plate panels. Upper rear compartment door to be offset to driver side constructed of smooth plate. Upper rear compartment to be 56" wide for little giant ladder storage. (2) 1.5" x 4" extrusions to be stacked between upper and lower compartments for directional light mounted under intermediate rear step.	$2,186
3110-0086	Bolt-on diamond plate 24" tailboard (full width of hosebed). Includes handrails- (2) vertical mounted on trailing edge of body and (1) horizontal mounted handrail(s) below hosebed.	$1,054
3110-0087	Full Height Rear Compartment with Upper Storage Compartment and Officer Side Ladder Tunnel. Includes smooth plate panels and storage access doors with Tri-Mark door latches.	$2,620
3110-0088	Full Height Rear Compartment with Officer Side Ladder Tunnel. Includes diamond plate panels and storage access door with push button latch. Officer side to have Rescue Pumper and Driver to have Pumper style enhanced extended.	$4,211
3110-0090	Handrail above B1 and below the hosebed will be "split". Each handrail to be approximately 18" and installed approximately 6" offset of centerline of B1 to allow for a 12" gap at center.	$496
3110-0093	Full Height Rear Compartment with Driver Side Storage Tunnel. Includes smooth plate panels and storage access door with push button latch.	$1,098
3110-0094	Full Height Rear Compartment with Upper Storage Compartment and Driver Side Storage Tunnel. Includes smooth plate panels and storage access doors with push button latches.	$2,095
3110-0095	Full Height Rear Compartment with Driver and Officer Side Storage Tunnels. Includes smooth plate panels and storage access doors with push button latches.	$1,212

3110-0096	Full Height Rear Compartment with Upper Storage Compartment, Driver and Officer Side Storage Tunnels. Includes smooth plate panels and storage access doors with push button latches.	$2,344
3110-0097	Bolt-on smooth plate tailboard (full width of rear compartment). Tailboard to include gator grip and be black duraback painted. Includes the enhanced extended side compartment frame work (2008 design) and handrails- (2) vertically on trailing edge of body and horizontally mounted handrail(s) below hosebed. Handrails to include center stanchion.	$1,599
3110-0099	NFPA hose bed access ladder. Zico model RL12 for increased visibility of rear outboard body mounted DOT/NFPA lighting. Includes required step lights and additional hand rail(s) if applicable. Location: [#LOC].	$1,657
3110-0100	Backboard stop bracket to be located approximately 76" back in officer side of ladder tunnel.	$228
3110-0101	Compartment preconnect hose feed thru. Includes smooth plate doors with push button latches. Locate to [#LOC] just outboard of the rear pump panel.	$1,200
3110-0102	Upper Storage Compartment to hold (2) backboards in place of standard ladder components. Backboard to be located on officer side of storage tunnel. Includes stop bracket located at approximately 74".	$568
3110-0103	Bolt-on diamond plate tailboard (full width of rear compartment). Includes the enhanced extended side compartment frame work with diamond plate compartment tops (embossied IPO Gator Grip due to department mounting of hose storage connectors in this area) and (1) driver and officer side lower area folding step (NO steps on driver or officer side upper areas). Main hosebed access is to be from the driver side of the pump module access ladder). Includes handrails- (2) vertically on trailing edge of body and horizontally mounted handrail(s) below hosebed.	$928
3110-0104	(2) vertically mounted booster reel roller assemblies. Locate (1) each side inboard side of the enhanced extended area (as far outboard as applicable). For use with rear compartment mounted booster reel.	$463
3110-0105	Upper Storage Compartment to hold (1) 17' Little Giant ladder and (1) backboard in place of standard ladder components. Little giant ladder to be located on officer side of storage tunnel stop bracket included approximately 113" back from opening, ladder to be stored in unfolded position. Backboard to be located in aluminum box hanging from upper area of officer side tunnel. Tunnel divider to be held 6" short from opening.	$568
3110-0106	Rear Mount pump/ladder tunnel access door. Includes single center mounted D-Ring latch and (2) hold open devices. Door to be [#LOC]. Door to open to 90 degrees and includes pull strap for access from ground.	$468
3110-0107	Upper and Lower Rear Compartment. Includes smooth plate panels. Includes a 19" channel for (2) tank inlets and (1) 5" jet dump located between the upper and lower non-transverse style compartments. The lower compartment height to be 15".	$3,606
3110-0109	Upper and Lower Rear Compartment. Includes smooth plate lower panels outboard of B1 and diamond plate upper panels outboard of B2. The B1 compartment to be 42" wide and B2 compartment to be 38" wide. Includes (2) 1.5" x 4" extrusions to be stacked between upper and lower compartments for directional light mounted under intermediate rear step.	$3,517
3110-0110	Rear Mount Rear Body. Includes rear body side structures with compartment L3/R3, interior compartment offset for pump panel location and mounting, rear body structure for rear mounted pump application. Includes painted job color smooth plate panels (and storage access door with push button latch, if applicable) outboard of pump access/panel(s) and rear body hosebed.	$9,350
3110-0111	Upper and Lower Rear Compartment. Includes smooth plate lower panels outboard of B1 and diamond plate upper panels outboard of B2. Includes (2) 1.5" x 4" extrusions to be stacked between upper and lower compartments for directional light mounted under intermediate rear step and back-up camera to be mounted centered in front of directional lightbar. The upper compartment to be offset to officer side due to rear discharge options.	$3,517
3110-0113	Bolt-on diamond plate 12" tailboard with Gator Grip (full width of body). Includes hand rails- (2) vertical on trailing edge of body and horizontal mounted hand rail(s) below hose bed.	$992
3110-0114	Bolt-on diamond plate 12" tailboard full width of body with Bustin Tread. This provides a flat back body design. Includes hand rails, (2) vertically on trailing edge of body and horizontally mounted hand rail below hose bed.	$992
3110-0115	Bolt-on diamond plate 12" tailboard with Gator Grip (full width of body). Includes (2) squared off beavertails with hand rails- (2) vertically on trailing edge of body and horizontally mounted hand rail below hose bed.	$744
3110-0116	Bolt-on diamond plate 12" tailboard full width of body with Bustin Tread. Includes (2) squared off beavertails with hand rails, (2) vertically on trailing edge of beavertails and horizontally mounted hand rail below hose bed.	$744
3110-0117	Bolt-on diamond plate 20" tailboard with Gator Grip. Includes hand rails- (2) vertically on trailing edge of body and horizontally mounted hand rail(s) below hose bed.	$922
3110-0118	Bolt-on diamond plate 20" tailboard between rear side compartments with Bustin Tread. Includes hand rails (2) vertically on trailing edge of body and horizontally mounted hand rail below hose bed.	$922
3110-0119	Bolt-on diamond plate 20" tailboard with Gator Grip (full width of body). Includes (2) squared off beavertails with hand rails- (2) vertically on trailing edge of body and horizontally mounted hand rail(s) below hose bed.	$922
3110-0120	Bolt-on diamond plate 20" tailboard with Bustin Tread (full width of body). Includes (2) squared off beavertails with hand rails, (2) vertically on trailing edge of body and horizontally mounted hand rail below hose bed.	$922

3110-0121	Bolt-on diamond plate 20" tailboard with Gator Grip (full width of body). Includes (2) slanted beavertails with removable outer panels and hand rails- (2) vertically on trailing edge of body and horizontally mounted hand rail(s) below hose bed.	$922
3110-0122	Bolt-on diamond plate 20" tailboard with Bustin Tread (full width of body). Includes (2) slanted beavertails and hand rails, (2) vertically on trailing edge of body and horizontally mounted hand rail below hose bed.	$922
3110-0123	Lower rear stainless steel short compartment B1, 46" wide x 35" high x 26" deep. Includes bolt-on intermediate step above. Entire rear panel to be smooth aluminum plate for Chevron graphics.	$1,022
3110-0124	Lower rear stainless steel tall compartment B1, 46" wide x 45" high x 26" deep. Includes bolt-on intermediate step above. Entire rear panel to be smooth aluminum plate for Chevron graphics.	$1,182
3110-0125	Upper Storage Tunnel to have bolt-in side panels to enclose the sides of the tunnel.	$568
3110-0126	Upper and Lower Rear Compartment with Driver and Officer Side Storage Tunnels. Includes smooth plate panels. Includes a 19" area for (1) tank inlet and (1) 5" jet dump located between the upper and lower compartments. The lower compartment height to be 17". The upper compartment to be full height and depth, includes bolt-in floor for access to plumbing components. Driver side tunnel opening to be narrowed to allow non-recessed folding step.	$3,868
3110-0127	Bolt-on diamond plate 18" tailboard (full width of body). Includes (2) slanted beavertails (no stanchions) with removable outer panels and handrails- (2) vertically on trailing edge of body and horizontally mounted handrail(s) below hosebed. Upper beavertail to be 8.75 due to folding steps.	$1,153
3110-0128	Full Height Rear Compartment with smooth plate panels. The rear compartment to be 36" due to the enhanced extended compartment and double door options.	$1,300
3110-0129	Full Height Rear Compartment with Officer Side Storage Tunnel. Includes smooth plate panels and storage access door with push button latch. The rear compartment to be 36" due to the enhanced extended compartment and double door options.	$1,413
3110-0130	Rear end tanker. Includes smooth plate upper and lower panels and a smooth plate center strip for a Jet or Newton Dump application.	$592
3110-0131	Full Height Rear Compartment with Officer Side Storage Tunnel. Includes smooth plate panels and storage access door with push button latch. Includes stepped upper horizontal tube to reduce hosebed height from ground over tank area.	$2,146
3110-0132	Bolt-on diamond plate tailboard (full width of rear compartment). Additional 10" of tailboard to run full width of body ("T" shaped tailboard). Includes the enhanced extended side compartment frame work and handrails - (1) vertical on trailing edge of body opposite side of ladder and handrail(s) horizontal below hosebed.	$2,219
3110-0133	Rear end tanker. Includes smooth plate upper and lower panels, a smooth plate center strip for a Jet or Newton Dump application and upper area access door for thru the tank storage.	$697
3110-0136	Full Height Rear Compartment with Upper Ladder Storage Compartment. Includes smooth plate panels. Includes area for storage of (1) 24', (1) 14', (1) 10' Attic, (4) pike poles and a lift-up storage access door with push buton latches (wire to door ajar). Lift-up door to use plunger style hold open device. Includes "NO STEP" tags located on outboard ends and positioned to be read from the open position of the door.	$2,014
3110-0142	Upper rear compartment stepped for use newton dump.	$185
3110-0143	(2) bolt-on compartments. Locate (1) each side of B1. Each compartment includes a hinged smooth plate door with D-Ring latch (wired into door ajar indicator), removable slat flooring and Gator Grip compartment top. Driver side compartment to be 37" high and officer side compartment to be 31" high. Lower hosebed access step (two driver side and one officer side) to be mounted to inboard side of compartment.	$1,949
3110-0144	Bolt-on diamond plate tailboard (full width of rear compartment). Additional 10" of tailboard to run full width of body ("T" shaped tailboard). Includes the enhanced extended side compartment frame work and handrails - (1) vertical on trailing edge of body opposite side of ladder and handrail(s) horizontal below hosebed on trailing edge of the intermediate step.	$2,219
3110-0145	Full Height Rear Compartment with smooth plate panels.	$1,246
3110-0146	Rear end with full height compartment. Includes diamond plate panels and double upper extrusions below hosebed area. Interior of compartment to be transverse side to side.	$1,444
3110-0147	Bolt-on diamond plate 16" tailboard (full width of body). Includes (2) slanted beavertails with raised stanchions post with E-ONE logo style mounts and removable outer panels, handrails- (2) vertically on trailing edge of body/beavertail and horizontally mounted handrail below hosebed on trailing edge of intermediate step.	$744
3110-0148	Bolt-on tailboard compartments located to the driver and officer side of B1. The bolt-on tailboard compartments to be 64" high with embossed diamond plate compartment tops. The compartments includes hinged smooth plate door with 1/4 turn latch(es). The each compartment to have 4" gap at top of the door. Each door to be wired into door ajar indicator.	$2,846
3110-0149	Full Height Rear Compartment with Upper Ladder Storage Compartment. Includes smooth plate panels. Includes area for storage of (1) 24', (1) 14', (1) 10' Attic, (2) pike poles and a drop down storage access door with Tri-Mark latch (wire to door ajar).	$2,090
3110-0150	Upper Storage Compartment to hold (1) 17' Little Giant ladder. Little giant ladder to be located on driver side of storage tunnel stop bracket included approximately 58" back from opening.	$568
3110-0151	Bolt-on diamond plate tailboard (full width of rear compartment). Additional 5.5" of tailboard to run full width of body ("T" shaped tailboard). Includes the enhanced extended side compartment frame work with diamond plate compartment tops, (1) officer side lower area folding step. Driver side includes (1) upper hosebed mounted handrail (as applicable) and handrails- (2) vertically on trailing edge of body and horizontally mounted handrail(s) below hosebed.	$2,219

3110-0152	Upper Storage Compartment divider to be located offset 26" from officer side. Officer side of divider to be enclosed to 86" deep and driver side of divider to be enclosed to 72" deep.	$568
3110-0153	Rear access into the enhanced extended portion of the L2 and R2 compartments. Includes smooth plate access doors with (2) push button latches each (wired to door ajar).	$727
3110-0154	Bolt-on diamond plate 6" tailboard (full width of body). Includes handrails- (2) vertically on trailing edge of body and horizontally mounted handrail(s) below hosebed.	$1,026
3110-0156	Upper Storage Compartment to hold (1) 17' Little Giant ladder, (1) 24' 2-section ladder, (1) 14' roof ladder, (1) 10' attic ladder and (2) pike poles.	$568
3110-0157	Rear end with Upper Storage Compartment. Includes smooth plate panels. Includes area for misc. storage and vertical hinged double doors with D-ring latch (wire to door ajar).	$2,014
3110-0158	Bolt-on diamond plate 16" tailboard (full width of body). Includes handrails- (2) vertical on trailing edge of body and horizontal mounted handrail(s) below hosebed.	$1,147
3110-0160	(2) bolt-on compartments. Locate (1) each side of B1 - driver side to have 11.5" wide x 46" high opening and officer side to have 14.5" wide x 29" high opening. Each compartment to be 21" deep. Each compartment includes a hinged smooth plate door (with 4" gap at top for connecting of hose stored in compartment) with D-Ring latch (wired into door ajar indicator), removable slat flooring and Gator Grip compartment top. Lower hosebed access step (two on the driver side and one on the officer side) to be mounted to inboard side of compartment.	$1,818
3110-0161	Bolt-on diamond plate 25" tailboard (full width of body). Includes (2) squared off beavertails (no stanchions) with removable outer panels and (2) 48" handrails vertical on beavertails and (1) 36" horizontal below hosebed.	$1,136
3110-0162	Full Height Rear Compartment with Officer Side Storage Tunnel. Includes smooth plate panels and storage access door with push button latch. B1 compartment opening to be 35" wide due to officer side tailboard compartment.	$1,256
3110-0163	Enhanced extended rear end with tall rear compartment and with officer side storage tunnel. Driver side enhanced extended to be be Pumper style and officer to be Recue Pumper style.Officer side hosebed extrusion to be stepped for storage tunnel. Included are diamond plate tailboard full width of the rear compartment, smooth plate panels and storage access door (wired to door ajar) with push button latch.	$2,369
3110-0164	Bolt-on diamond plate 24" tailboard (full width of body). Includes (2) squared off 12" deep beavertails (no stanchions) with removable outer panels and handrails- (2) vertical on trailing edge of body and horizontal mounted handrail(s) below hosebed. The outer beavertail panels to be aluminum smooth plate to allow for chevron striping. For use with swivel style rear tank dump only.	$1,266
3110-0165	Full Height Rear Compartment with Driver Side Storage Tunnel. Includes smooth plate panels and storage access door with push button latch. The rear compartment to be 36" due to the enhanced extended compartment and double door options.	$1,413
3110-0166	Full height rear compartment with officer side storage tunnel. Includes bolt-on intermediate step above. SS eMAX only.	$1,310
3110-0167	Full Height Rear Compartment with Upper Storage Compartment and Officer Side Ladder Tunnel. Includes smooth plate panels and storage access doors with Tri-Mark model 030-1300 door latches. The upper tunnel access door to be horizontally hinged lift-up with gas shock. The upper tunnel to have on the officer side a stop at 128" and on the driver side a stop at 72" from rear of truck.	$2,549
3110-0168	Bolt-on diamond plate tailboard (full width of rear compartment). Additional 5" of tailboard to run full width of body ("T" shaped tailboard). Includes the enhanced extended side compartment frame work, (1) officer side lower area folding step and handrails- (2) vertically on trailing edge of body and horizontally mounted handrail(s) below hosebed.	$1,621
3110-0170	Lower Rear Compartment with Officer Side Storage Tunnel. Includes smooth plate panels and storage access door with push button latch.	$1,212
3110-0172	Bolt-on diamond plate 14" tailboard full width of body with Bustin Tread, provides flat back body design. Includes rear of body hand rails.	$1,050
3110-0173	Rear body smooth ladder door be painted job color finish to match body color.	$377
3110-0175	Lower Rear Compartment only. Upper section to be smooth plate panel. Includes smooth plate panels. Upper section to be set back 8" with diamond plate step with gator grip.	$2,386
3110-0176	Full Height Rear Compartment. Includes smooth plate panels. B1 to be as tall as possible (remove traffic advisor platework).	$1,157
3110-0177	Bolt-on diamond plate 12" tailboard (full width of body). Includes (2) squared off beavertails (no stanchions) with removable outer panels and (2) vertical mounted handrails on trailing edge of body.	$744
3110-0178	Full height rear compartment. Includes smooth plate panels. Bolt-on diamond plate tailboard (full width of rear compartment). Includes the driver side rescue style enhanced extended side compartment frame work with diamond plate compartment tops, officer side pumper style enhanced extended side compartment frame work with diamond plate compartment top. Officer side lower rear compartment will be transverse with B1. Handrail included and located: (1) driver upper hosebed mounted handrail (as applicable) and handrails- (2) vertically on trailing edge of body and horizontally mounted handrail(s) below hosebed.	$2,734
3110-0179	Upper Storage Compartment to hold (1) 24' 2-section ladder, (1) 14' roof ladder, (1) 12' pike pole, (1) 8' pike pole, (2) 6' pike poles and (2) 6' D-handle trash hooks. Area rearward of pike poles to be closed off just before fill towers.	$727
3110-0180	Bolt-on diamond plate 14" tailboard (full width of body). For use with rear ladder application. Includes handrails- (1) mounted vertical on trailing edge of body opposite side of ladder and handrail(s) horizontal below hosebed.	$1,022

3110-0181	Rear flip down tailboard. Includes indicator in cab when the tailboard is in the down position. Includes handrails- (2) vertically on trailing edge of body and horizontally mounted handrail(s) below hosebed.	$3,582
3110-0182	Full Height Rear Compartment with Upper Storage Compartment. Includes diamond plate panels. Includes area for misc. storage and a drop down storage access door with a D-ring latch (wire to door ajar).	$2,014
3110-0183	Full height rear compartment with upper ladder storage compartment. Includes smooth plate panels. Includes area for storage of (1) 24',(1)14',(1)10' attic, (2) pike poles and a drop down storage access door with push button latches (wire to door ajar).note door to open up past 90 degrees.	$2,014
3110-0184	(2) bolt-on compartments. Locate (1) each side of B1 - driver side to have 13" wide opening and officer side to have 16" wide opening. Each compartment includes a hinged smooth plate door (with 4" gap at top for connecting of hose stored in compartment) with D-Ring latch (wired into door ajar indicator), removable slat flooring and Gator Grip compartment top. Lower hosebed access step (one each side) to be mounted to inboard side of compartment.	$1,818
3110-0185	Upper and Lower Rear Compartment. Includes smooth plate panels. Upper compartment to be as tall as possible (remove traffic advisor platework).	$1,789
3110-0186	Full Height Rear Compartment with Officer Side Storage Tunnel. Includes smooth plate panels and storage access door with push button latch. Area just below hosebed for discharge pipe routing above the rear compartment. Includes stepped upper horizontal tube to reduce hosebed height from ground over tank area.	$2,382
3110-0188	Bolt-on diamond plate 10" tailboard (full width of body). For use with rear ladder application. Includes a handrail vertically mounted on trailing edge of body opposite side of ladder.	$888
3110-0189	Full Height Rear Compartment with Officer Side Storage Tunnel. Includes smooth plate panels and storage access door with push button latch (remove traffic advisor platework).	$1,098
3110-0190	Lower rear stainless steel short compartment B1, 46" x 35" high x 26" deep. Includes intermediate step above. Side walls removed to allow a Little Giant ladder to be slid in from compartment R3. Provide a stainless steel bolt-on panel to conceal and protect ladder when stored.	$1,263
3110-0191	Bolt-on diamond plate 14" tailboard between rear side compartments with Bustin Tread. Includes hand rails (2) vertically on trailing edge of body and horizontally mounted hand rail below hose bed.	$1,050
3110-0193	Full Height Rear Compartment with Driver Side Storage Tunnel. Includes smooth plate panels and storage access door with push button latch.	$1,513
3110-0194	Full Height Rear Compartment with smooth plate panels. The B1 compartment to be 40" wide, full depth (no compartment break) and as tall as possible (remove traffic advisor platework).	$1,513
3110-0195	Full Height Rear Compartment. Includes smooth plate panels. The rear compartment to be 36" due to the enhanced extended compartment and double door options.	$1,091
3110-0198	B1 floor to be recessed as applicable to allow for booster reel and or dealer installed equipment to be located below newton dump/applicable dump without interference.	$481
3110-0199	Compartment B1, 24" wide x 10" high x 26" deep, located between full length chassis frame rails. The compartment shall include a bottom hinged drop-down access door using a D-ring latch (wire to door ajar).	$925
3110-0200	Full Height Rear Compartment with Driver and Officer Side Storage Tunnels. Includes smooth plate panels and storage access doors with d-ring latches.	$1,238
3110-0201	Bolt-on diamond plate tailboard (full width of rear compartment). Additional 10" of tailboard to run full width of body ("T" shaped tailboard). Includes the enhanced extended side compartment frame work and (1) handrail vertical on trailing edge of driver's side of body and horizontal mounted handrail (driver's side) below hosebed.	$2,219
3110-0202	Upper and Lower Rear Compartment. Includes upper and lower sanded smooth plate panels. Upper rear compartment door to be offset to driver side constructed of smooth plate. Upper rear compartment to be 56" wide for little giant ladder storage. (2) 1.5" x 4" extrusions to be stacked between upper and lower compartments for directional light mounted under intermediate rear step.	$2,186
3110-0203	Bolt-on diamond plate tailboard (full width of rear compartment). Includes the enhanced extended side compartment frame work with diamond plate compartment tops raised 12" to cover rear piping, (1) officer side lower area folding step. Driver side includes (1) upper hosebed mounted handrail (as applicable) and handrails- (2) vertically on trailing edge of body and horizontally mounted handrail(s) below hosebed.	$1,136
3110-0204	Lower rear stainless steel tall compartment B1, 46" wide x 50" high x 26" deep. Includes bolt-on intermediate step above. Entire rear panel to be smooth aluminum plate for Chevron graphics.	$1,259
3110-0206	Full Height Rear (no compartment). Includes opening for access to rear mount pump panel and smooth plate panels. Includes openings for preconncts to driver's side of rear pump panel	$1,402
3110-0207	Lower rear stainless steel short compartment B1, 46" wide x 35" high x 26" deep, without an intermediate rear step. Entire rear panel to be smooth aluminum plate for Chevron graphics.	$816
3110-0208	Bolt-on diamond plate 10" tailboard (full width of body). For use with a folding step application. Includes handrails- (2) vertical on trailing edge of body and handrail(s) horizontal below hosebed.	$682
3110-0209	Upper and Lower Rear Compartment. Includes smooth plate panels. B1 to be 36" wide due to enhanced extended feature and hinged door(s) as required.	$2,359
3110-0210	Bolt-on diamond plate 10" tailboard (full width of body). For use with folding step application. Includes handrails- (1) vertically on trailing edge of body opposite each side of body and handrail(s) horizontally below hosebed.	$888

3110-0211	Bolt-on diamond plate tailboard (full width of rear compartment). Includes the enhanced extended side compartment frame work with diamond plate compartment tops, (2) recessed folding steps in lower area (1) officer side, (1) driver side. Driver side includes (1) upper hosebed mounted handrail (as applicable) and handrails- (2) vertically on trailing edge of body and horizontally mounted handrail(s) below hosebed.	$1,065
3110-0212	Bolt-on diamond plate tailboard (full width of hosebed). Additional 10" of tailboard to run full width of body ("T" shaped tailboard). Includes the extended side compartment frame work and handrails- (2) vertical mounted on trailing edge of body and horizontal mounted handrail(s) below hosebed.	$2,219
3110-0213	Bolt-on diamond plate 20" tailboard with Bustin Tread (full width of body). Includes (2) slanted beavertails and hand rails, (2) vertically on trailing edge of body and horizontally mounted hand rail below hose bed. Lower rear stainless steel short compartment B1, 46" wide x 35" high x 26" deep, without an intermediate rear step. Entire rear panel to be smooth stainless steel for Chevron graphics.	$2,028
3110-0215	Upper Storage Compartment to hold (1) 10' attic ladder, (4) pike poles, and (2) 6" x 10' hard suction hoses. Includes stop bracket included approximately 130" back from opening. An enclosed frontal area shall be included as part of the tunnel design.	$568
3110-0216	Bolt-on diamond plate 12" tailboard (full width of body). Includes (2) squared off beavertails with stanchions and removable outer panels and handrails- (2) vertical on trailing edge of body and horizontal mounted handrail(s) below hosebed.	$744
3110-0217	(1) Officer side rear pump module roof top compartment. Includes hinged raised aluminum smooth plate with black Scorpion coating (IPOS diamond plate) compartment lid with turn latches and grab handle(s). Compartment to have (1) bracket mounted LED light and wired to door ajar indicator in cab. Outboard side of body to run full width and wrap around the rear and meet with the end of the hosebed end.	$1,568
3110-0218	(1) Driver side rear pump module roof top compartment. Includes hinged raised smooth plate with black Scorpion coating (IPOS diamond plate) compartment lid with turn latches and grab handle(s). Compartment to have (1) bracket mounted LED light and wired to door ajar indicator in cab. Outboard side of body to run full width and wrap around the rear and meet with the end of the hosebed end.	$1,568
3110-0220	Bolt-on 10" tailboard (full width of body) aluminum smooth plate with black Scorpion coating (IPOS diamond plate). For use with rear ladder application. Includes handrails- (1) vertically on trailing edge of body opposite side of ladder and handrail(s) horizontally below hosebed.	$1,166
3110-0221	Full height rear compartment with upper storage compartment. Includes smooth plate panels. Includes area for misc. storage and a lift up storage access door with push button latches (wire to door ajar).	$2,169
3110-0222	Bolt-on 10" diamond plate tailboard (full width of rear compartment). Includes the enhanced extended side compartment frame work. For use with rear ladder application. Includes handrails (1) vertical mounted on trailing edge of body opposite side of ladder and (1) horizontal mounted handrail(s) below hosebed.	$1,943
3110-0223	Full Height Rear Compartment with Officer Side Storage Tunnel. Includes smooth plate panels and storage access door with d-ring latch.	$1,098
3110-0224	Rear body panels to be upgraded from smooth aluminum plate to un-painted smooth FRP.	$263
3110-0225	Full Height Rear Compartment with Upper Ladder Storage Compartment. Includes smooth plate panels. Includes area for storage of (1) 24', (1) 14', (1) 10' Attic, (2) pike poles and a lift up storage access door with push button latches (wire to door ajar). The door shall be held in place with a plunger style hold open device.	$2,014
3110-0226	Bolt-on diamond plate 22" tailboard between rear side compartments with Bustin Tread. Includes hand rails (2) vertically on trailing edge of body and horizontally mounted hand rail below hose bed.	$1,050
3110-0227	Upper and lower rear compartment. Includes smooth plate panels. For use with raised lower rear body (B1 is 25" high).	$1,682
3110-0228	Bolt-on diamond plate 12" tailboard (full width of body). Includes (2) squared off beavertails (no stanchions) with removable outer panels and handrails- (2) vertical trailing edge of body and horizontal mounted handrail(s) below hosebed. Beavertails and outer panels to be smooth plate painted job color. Tailboard to diamond plate painted black durabak.	$1,835
3110-0229	Lower rear stainless steel tall compartment B1, 46" wide x approx. 64" high x 26" deep, but door opening remains in the normal 45" high position. Includes bolt-on intermediate step above the door opening. Entire rear panel to be smooth plate for Chevron graphics.	$1,308
3110-0230	Bolt-on 10" tailboard (full width of body) aluminum smooth plate with black Scorpion coating (rough finish) IPOS diamond plate. For use with rear ladder application. Includes handrails- (1) vertically on trailing edge of body opposite side of ladder and handrail(s) horizontally below hosebed.	$1,166
3110-0231	(1) bolt-on compartment. Locate on the officer side of rear step and to have 16" wide opening. The compartment includes a vertically hinged smooth plate door (with 4" gap at top for connecting of hose stored in compartment) with D-ring latch (wired into door ajar indicator), removable Duradek flooring and embossed non-skid treadplate compartment top. Lower hose bed access step to be mounted to inboard side of compartment.	$910
3110-0232	Bolt-on diamond plate 22 inch tailboard tailboard (full width of body). Includes (2) squared off beavertails (no stanchions) with removable outer panels and handrails- (2) vertical on trailing edge of body and horizontal mounted handrail(s) below hosebed.	$1,163

3110-0233	Bolt-on tailboard compartments located to the driver and officer side of B-1. The bolt-on tailboard compartments to be full height just below hosebed. Doors to be (1) Piece full height as applicable and hinged to the outside with push-button latches. Install shelf tracking in each compartment full height	$3,369
3110-0234	Upper Storage Compartment to hold (1) stokes basket in place of standard ladder components. Stokes basket to be located on officer side of storage tunnel. Stop bracket full width across tunnel shall be included.	$161
3110-0235	Step full width rear intermediate. Intermediate rear step to be located just below the upper ladder storage compartment.	$769
3110-0236	Step full width rear intermediate. Intermediate rear step to be located just above the upper ladder storage compartment.	$769
3110-0237	Full height rear compartment with upper storage compartment. Includes smooth plate panels. Includes an area for misc. storage and a lift up storage access door with a D-ring latch (wire to door ajar) and a plunger style hold open device. To include a storage sleeve for (2) backboards (72"X16"X2" each) offset to the officer side with a stop at 80".	$2,319
3110-0238	Bolt-on diamond plate 18" tailboard (full width of body). Includes handrails- (2) vertically on trailing edge of body and handrail(s) horizontally below hosebed.	$1,693
3110-0239	Bolt-on diamond plate 10" tailboard (full width of body). Includes handrail - (1) vertically on officer side trailing edge of body and horizontally mounted handrail(s) below hosebed.	$992
3110-0240	Lower Rear Compartment with access door above to the ladders storage thru tank. Includes smooth plate panels and storage access door with push button latches.	$1,640
3110-0241	(1) bolt-on compartment 17" W x 40" H x 11" D. Locate on the officer side of rear step and to have 15" wide opening. The compartment includes a vertically hinged smooth plate door (with 4" gap at top for connecting of hose stored in compartment) with D-ring latch (wired into door ajar indicator), removable Duradek flooring and embossed non-skid treadplate compartment top. Lower hose bed access steps to be mounted to inboard side of compartment.	$964
3110-0242	Bolt-on diamond plate 25" tailboard between rear side compartments with Bustin Tread. Includes hand rails (2) vertically on trailing edge of body and horizontally mounted hand rail below hose bed.	$1,050
3110-0243	Bolt-on diamond plate 16" tailboard (full width of body). For use with rear ladder application. Includes handrails- (1) vertically on trailing edge of body opposite side of ladder and handrail(s) horizontally below hosebed.	$1,632
3110-0244	Single Low Rear Compartment with Officer Side Storage Tunnel. For use with low hosebed. Includes smooth plate panels and storage access door with push button latch.	$1,098
3110-0245	Bolt-on diamond plate 18" tailboard (full width of body). Includes (2) squared off beavertails (no stanchions) with removable outer panels and handrails- (2) vertical on trailing edge of body and horizontal mounted handrail(s) below hosebed. Outer panels to be smooth plate painted job color.	$1,107
3110-0246	Bolt-on diamond plate 18" tailboard (full width of body). For use with rear ladder application. Includes handrails- (1) vertically on trailing edge of body opposite side of ladder and handrail(s) horizontally below hosebed.	$1,693
3110-0247	Full Height Rear Compartment with Upper Storage Compartment and Officer Side Storage Tunnel. Includes smooth plate panels and storage access door with push button latch. Upper compartment to be approx 17" high x 38" wide x 26" deep.	$1,549
3110-0248	Full Height Rear Compartment. Includes smooth plate panels, angled rear body with flip down tailboard and handrails- (2) vertical on trailing edge of body and horizontal mounted handrail(s) below hosebed.	$3,144
3110-0249	Bolt-on diamond plate 10" tailboard (full width of body). Includes handrails- (2) vertically on trailing edge of body. Must be used with hosebed dividers that include hand hold cut outs (the horizontally mounted handrail(s) are not included).	$992
3110-0250	Top of body stepping surface plate work (compartment tops and enhanced extended compartment top at rear of body) shall be smooth plate painted black Durabak.	$697
3110-0251	Full Height Rear Compartment with Officer Side Storage Tunnel. Includes flush smooth plate rear facing body panels and storage access door with push button latch.	$1,258
3110-0252	Enhanced extended exterior inside facing walls at either side of B1 compartment opening shall be smooth plate painted black durabak.	$573
3110-0253	Full Height Rear Compartment with smooth plate panels. Compartment material to be 5083-H321.	$1,274
3110-0254	Single low rear compartment. For use with low hosebed. Includes smooth plate panels.	$1,091
3110-0255	Full Height Rear Compartment 44" wide. Includes smooth plate panels.	$1,182
3110-0256	Bolt-on diamond plate 14" tailboard (full width of body). For use with dual rear ladder application. Includes handrail horizontally mounted below hosebed.	$1,022
3110-0257	Rear Panel Compartment. Compartment B1, located centered ahead of the rear tailboard, shall be 46" wide x approximately 50" high x 26" deep. Solid walls shall be provided on both sides of the rear compartment. This compartment shall be of 12 gauge 304L stainless steel.	$1,211
3110-0258	Rear Panel Area. The entire rear panel of the body shall be covered using smooth FRP panels for application of the Chevron graphics. The rear panel area shall be of the flat back body design.	$1,782
3110-0259	Bolt-on diamond plate 14" tailboard (full width of body). Includes handrails- (2) vertically on trailing edge of body and horizontally mounted handrail(s) below hosebed.	$1,124
3110-0260	(1) officer side rear pump module extra width (inboard side) roof top compartment. Includes hinged raised compartment lid with turn latches and grab handle(s). Compartment to have (1) Amdor LED strip light and wired to door ajar indicator in cab. Outboard side of body to run full width and wrap around the rear and meet with the end of the hosebed end.	$2,584

3110-0261	(1) driver side rear pump module extra width (inboard side) roof top compartment (offset rearward and sized to allow deck gun to stow without interfering with hosebed area). Includes hinged raised compartment lid with turn latches and grab handle(s). Compartment to have (1) Amdor LED strip light and wired to door ajar indicator in cab. Outboard side of body to run full width and wrap around the rear and meet with the end of the hosebed.	$2,270
3110-0262	Full Height Rear Compartment with Upper Storage Compartment and Officer Side Storage Tunnel. Upper Storage Compartment to be fully enclosed drop in / bolt in box with top. Compartment to be full height X full width of opening and 86" deep with a vertical partition located 26" from officer side. Driver side of partition to have a stop located 72" from box opening. Includes smooth plate panels and storage access doors with push button latches.	$4,759
3110-0263	Lower Rear Compartment with Officer Side Storage Tunnel. Includes smooth plate panels and storage access door with push button latch. Includes bolt-on panel between recessed traffic advisor and lower compartment for rear tank fill.	$1,374
3110-0264	Lower rear stainless steel tall compartment B1, 46" wide x 60" high x 26" deep. Entire rear panel to be smooth FRP plate for Chevron graphics.	$1,204
3110-0265	Bolt-on diamond plate 16" tailboard full width of body with Bustin Tread. This provides a flat back body design. Includes hand rails, (2) vertically on trailing edge of body and horizontally mounted hand rail below hose bed.	$1,084
3110-0266	Rear end tanker. Includes smooth plate upper and lower panels, a smooth plate center strip for a Jet or Newton Dump application, driver, and officer side access doors for storage tunnels.	$772
3110-0267	Upper and Lower Rear Compartment. Includes smooth plate panels. Upper compartment to be as tall as possible (remove traffic advisor platework).	$2,389
3110-0268	Bolt-on diamond plate 12" tailboard 98" width Bustin Tread and Chicago style mitered corners. This provides a flat back body design. Includes hand rails, (2) vertically on trailing edge of body and horizontally mounted hand rail below hose bed.	$1,191
3110-0269	Lower rear stainless steel short and narrow compartment B1, 26" wide x 35" high x 26" deep, for use with special lower rear panel plumbing options. Includes 46" wide intermediate rear step above. Entire rear panel to be smooth aluminum plate for Chevron graphics.	$1,030
3110-0273	Full Height Rear Compartment with 4" high permanent diamond plate shelf for a Upper and Lower Rear Compartment design. Includes smooth plate panels. Upper compartment to be as tall as possible (remove traffic advisor platework).	$2,389
3110-0274	Bolt-on diamond plate 24" tailboard (full width of body). Includes (2) squared off 10" deep beavertails (no stanchions) with removable outer panels and handrails- (2) vertical on trailing edge of body and horizontal mounted handrail(s) below hosebed. For use with swivel style rear tank dump only.	$1,088
3110-0275	Lower rear stainless steel tall compartment B1, 46" wide x approx. 64" high x 34" deep, door opening 53" high position. Includes bolt-on intermediate step above the door opening. Entire rear panel to be smooth plate for Chevron graphics.	$1,540
3110-0276	Lower Rear Compartment with access above to the ladders storage thru tank. Includes smooth plate panels and stepped upper horizontal tube to reduce hosebed height from ground over tank area.	$1,894
3110-0277	Lower rear stainless steel short compartment B1, 46" wide x 40.25" high x 26" deep. Includes bolt-on intermediate step above. Entire rear panel to be smooth aluminum plate for Chevron graphics.	$1,022
3110-0278	Upper rear body panel below hose bed and above lower compartments to be brushed stainless steel (no chevron). Panel to be full width and includes the area behind the rear discharge pipes.	$181
3110-0279	Bolt-on diamond plate 20" tailboard (full width of body). Includes (2) slanted beavertails with lowered height approx 5.5" from standard to inhibit interferance as stowed with beacon lights as optioned (no stanchions) with removable outer panels and handrails- (2) vertical on trailing edge of body and horizontal mounted handrail(s) below hosebed.	$1,202
3110-0280	Bolt-on diamond plate 20" full width tailboard between rear side compartments with Bustin Tread. Includes hand rails (2) vertically on trailing edge of body and horizontally mounted hand rail below hose bed. Trailing edge of side compartments include 2" deep aluminum treadplate bumperettes to align tailboard to back of body.	$1,090
3110-0281	Full Height Rear Compartment with Upper Storage Compartment and Officer Side Storage Tunnel. Includes smooth plate panels and storage access doors with "D"-ring latches.	$2,095
3110-0282	Single low rear compartment. For use with low hosebed. Includes smooth plate panels. B1 compartment 28" deep.	$941
3110-0283	Full Height Rear Compartment with Upper Ladder Storage Compartment. Includes smooth plate panels. Includes area for storage of (1) 24', (1) 14', (1) 10' Attic, (2) pike poles and a drop down storage access door with D-Ring latch (wire to door ajar).	$2,088
3110-0284	Bolt-on diamond plate 18" tailboard (full width of body). Includes (2) slanted beavertails (no stanchions) with removable outer panels and handrails- (2) vertically on trailing edge of body.	$976
3110-0285	The rearend area of the extra wide roof top compartment above the Zico access ladder to be recessed in 16". The stepping area to be embossed diamond plate.	$726
3110-0286	Full Height Rear Compartment with Upper Storage Compartment and Officer Side Storage Tunnel. Includes smooth plate panels and storage access doors with "D"-ring latches. Divider to be full length and be positioned 27" off of driver side compartment wall or as applicable close to fill tower on water tank. Area to the left of the divider to have a stop and be 84" deep. Area to the right of the divider to have a stop and be 75" deep.	$2,126
3110-0289	Pumper rear mount rear end with lower pump panel provisions and upper pump maintenance access door with driver side ladder tunnel. Includes smooth plate panels and storage access doors with D-ring latches.	$1,154

3110-0290	Bolt-on diamond plate 12" tailboard (full width of body). For use with rear ladder application. Includes handrails- (1) vertical on trailing edge of body opposite side of ladder and handrail(s) horizontal below hosebed.	$964
3110-0291	Single Low Rear Compartment with Officer Side Storage Tunnel. For use with low hosebed. Includes smooth plate panels and storage access door with d-ring latch.	$1,098
3110-0292	Rear Panel Compartment. Compartment B1, located centered ahead of the rear tailboard, shall be 46" wide x approximately 50" high x 32" deep. Solid walls shall be provided on both sides of the rear compartment. This compartment shall be of 12 gauge 304L stainless steel.	$1,211
3110-0293	Bolt-on diamond plate 12" tailboard full width of body with Bustin Tread. This provides a flat back body design. Includes hand rails, (2) vertically on trailing edge of body and NO horizontally mounted hand rail below hose bed.	$953
3110-0294	Lower rear stainless steel short compartment B1, 46" wide x 35" high x 26" deep, without an intermediate rear step for hinged doors. Entire rear panel to be smooth aluminum plate for Chevron graphics.	$816
3110-0296	Lower Rear Compartment only. Upper section to be smooth plate panel. Includes smooth plate panels.	$1,022
3110-0298	Full Height Rear Compartment with Upper Ladder Storage Compartment. Includes smooth plate panels. Includes area for storage of (1) 28', (1) 14', (1) 10' Attic, (1) Dry wall hook, (2) pike poles and a drop down storage access door with push buton latches (wire to door ajar).	$2,014
3110-0299	1" X 1.5" extrusion added to lower B1 compartment door opening to form a 10" wide notch offset to officer side for 5" LDH hose connected to customer supplied and installed valve stored in B1. This will also require floor mounted rollout tray to be raised to clear lower door opening.	$342
3110-0300	Full Height Rear Pump Panel Compartment with officer side ladder tunnel storage with smooth plate door secured with D-Ring style latch. Includes smooth plate panels, angled rear body with flip down tailboard and handrails as applicable. Pump Panels to be recessed in the rear body and enclosed on all sides.	$5,023
3110-0302	Full Height Rear Compartment with Upper Ladder Storage Compartment. Includes smooth plate panels. Includes area for storage of (1) 24', (1) 14', (1) 10' Attic, (2) NY Roof Hook style pike poles and a drop down storage access door with push buton latches (wire to door ajar).	$2,014
3110-0303	Full Height Rear Compartment with Driver and Officer Side Storage Tunnels. Includes smooth plate panels and storage access doors with push button latches tied to door ajar. Rear compartment to be dual purpose and equipped with a 22" wide door opening on the driver side and a rear body panel added in the remaining space for a rear slam strip to accommodate a jet dump and a direct tank fill in the lower officer side area of the rear compartment. Upper area above slam strip to include a vertical hinged access door of smooth plate aluminum matching rear of body selected finish with stainless steel hinge, push button latch and rubber impact bumper to cushion door on handrail in open position.	$2,562
3110-0304	Full Height Rear Pump Panel Compartment. Includes smooth plate panels, angled rear body with flip down tailboard and handrails as applicable. Pump Panels to be recessed in the rear body and enclosed on all sides.	$4,835
3110-0305	Lower rear stainless steel tall compartment B1, 46" wide x 45" high x 26" deep without intermediate step above. Entire rear panel to be smooth aluminum plate for Chevron graphics.	$976
3110-0306	Lower Rear Compartment with Officer Side Storage Tunnel. Includes smooth plate panels and storage access door with "D"-ring.	$1,212
3110-0308	Upper rear stainless steel short compartment B2, 39" wide x 12" high x 26" deep. Entire rear panel to be smooth FRP plate for Chevron graphics.	$824
3110-0309	Bolt-on 3/16" (.1875") smooth plate painted black Durabak 10" tailboard (full width of body). For use with rear ladder application. Includes handrails- (1) vertical on trailing edge of body opposite side of ladder and handrail(s) horizontal below hosebed.	$1,110
3110-0310	Full height rear compartment with upper ladder storage compartment. Includes smooth plate panels. Includes area for storage of (1) 24',(1)14',(1)10' attic, (3) pike poles, including (1) one each 6', 8' and 10' with APH style hooks, a lift up storage access door with hold open springs and push button latches (wire to door ajar) note door to open up 90 degrees. There shall be label 'DO NOT STEP' to be applied "upside down" as viewed from the ground at the bottom of the lift-up door.	$2,210
3110-0311	Bolt-on diamond plate tailboard (full width of rear compartment). 20" tailboard to run full width of body ("T" shaped tailboard). Includes the extended side compartment frame work and handrails- (2) vertical on trailing edge of body and horizontal mounted handrail(s) below hosebed.	$1,693
3110-0312	Bolt-on diamond plate 18" tailboard (full width of body). Includes (2) slanted beavertails (no stanchions) with removable outer smooth plate panels painted job color and handrails- (2) vertically on trailing edge of body and horizontally mounted handrail(s) below hosebed.	$1,853
3110-0313	Full Height Rear Compartment with Driver Side Storage Tunnel. Includes smooth plate panels and storage access door with D-ring latch.	$1,137
3110-0314	Rear flip down tailboard to be painted Durabak black. Includes indicator in cab when the tailboard is in the down position. Includes handrails- (2) vertically on trailing edge of body and horizontally mounted handrail(s) below hosebed.	$4,478
3110-0315	Upper rear compartment depth to be approximately 40" deep.	$265
3110-0316	Lower Rear Compartment only 46" wide opening. Upper section to be smooth plate panel. Includes smooth plate panels.	$1,179
3110-0317	Rear flip down tailboard. Includes indicator in cab when the tailboard is in the down position. Includes handrails- (1) vertical on trailing edge of body opposite side of ladder and handrail(s) horizontal below hosebed.	$3,582
3110-0318	Upper and lower rear compartment. Includes smooth plate panels. For use with raised lower rear body (B1 is 29" high).	$1,682

3120-0000	Officer half side body with 24" wide forward and 36" wide rearward compartmentation. Includes adjustable ladder tracks.	$4,100
3120-0001	Officer half side body with 24" wide forward and 50" wide rearward extended compartmentation. Includes adjustable ladder tracks.	$4,675
3120-0003	Officer half side body with 30" wide forward and 36" wide rearward compartmentation. Includes adjustable ladder tracks.	$4,388
3120-0004	Officer half side body with 36" wide forward and 36" wide rearward compartmentation. Includes adjustable ladder tracks.	$4,697
3120-0005	Officer half side body with 42" wide forward and 42" wide rearward compartmentation. Includes adjustable ladder tracks.	$5,022
3120-0006	Officer half side body with 48" wide forward and 48" wide rearward compartmentation. Includes adjustable ladder tracks.	$5,375
3120-0007	Officer half side body with 30" wide forward and 50" wide rearward extended compartmentation. Includes adjustable ladder tracks.	$4,960
3120-0008	Officer half side body with 36" wide forward and 50" wide rearward extended compartmentation. Includes adjustable ladder tracks.	$5,268
3120-0009	Officer half side body with 42" wide forward and 56" wide rearward extended compartmentation. Includes adjustable ladder tracks.	$5,599
3120-0010	Officer half side body with 48" wide forward and 62" wide rearward extended compartmentation. Includes adjustable ladder tracks.	$5,949
3120-0011	Officer half side body with 24" wide forward and 50" wide rearward enhanced extended compartmentation. Includes adjustable ladder tracks.	$4,939
3120-0012	Officer half side body with 30" wide forward and 50" wide rearward enhanced extended compartmentation. Includes adjustable ladder tracks.	$5,224
3120-0013	Officer half side body with 36" wide forward and 50" wide rearward enhanced extended compartmentation. Includes adjustable ladder tracks and ladder brackets.	$5,530
3120-0014	Officer half side body with 42" wide forward and 56" wide rearward enhanced extended compartmentation. Includes adjustable ladder tracks.	$5,859
3120-0015	Officer half side body with 48" wide forward and 62" wide rearward enhanced extended compartmentation. Includes adjustable ladder tracks.	$6,211
3120-0016	Officer 3/4 side body with upper and lower compartmentation. Includes 24" wide forward and 36" wide rearward lower compartments and (3) opening upper compartments.	$5,535
3120-0017	Officer 3/4 side body with full height 24" wide forward and 36" wide rearward compartmentation. Includes (1) 56" wide compartment over the wheel well.	$5,126
3120-0018	Officer 3/4 side body with upper and lower compartmentation. Includes 30" wide forward and 36" wide rearward lower compartments and (3) opening upper compartments.	$5,893
3120-0019	Officer 3/4 side body with upper and lower compartmentation. Includes 36" wide forward and 36" wide rearward lower compartments and (3) opening upper compartments.	$6,276
3120-0020	Officer 3/4 side body with upper and lower compartmentation. Includes 42" wide forward and 42" wide rearward lower compartments and (3) opening upper compartments.	$6,687
3120-0021	Officer 3/4 side body with upper and lower compartmentation. Includes 48" wide forward and 48" wide rearward lower compartments and (3) opening upper compartments.	$7,127
3120-0022	Officer 3/4 side body with full height 30" wide forward and 36" wide rearward compartmentation. Includes (1) 56" wide compartment over the wheel well.	$5,485
3120-0023	Officer 3/4 side body with full height 36" wide forward and 36" wide rearward compartmentation. Includes (1) 56" wide compartment over the wheel well.	$5,866
3120-0024	Officer 3/4 side body with full height 42" wide forward and 42" wide rearward compartmentation. Includes (1) 56" wide compartment over the wheel well.	$6,277
3120-0025	Officer 3/4 side body with full height 48" wide forward and 48" wide rearward compartmentation. Includes (1) 56" wide compartment over the wheel well.	$6,717
3120-0026	Officer 3/4 side body with 24" wide forward and 50" wide rearward extended compartmentation. Includes (1) 56" wide compartment over the wheel well.	$5,699
3120-0027	Officer 3/4 side body with 30" wide forward and 50" wide rearward extended compartmentation. Includes (1) 56" wide compartment over the wheel well.	$6,056
3120-0028	Officer 3/4 side body with 36" wide forward and 50" wide rearward extended compartmentation. Includes (1) 56" wide compartment over the wheel well.	$6,442
3120-0029	Officer 3/4 side body with 42" wide forward and 56" wide rearward extended compartmentation. Includes (1) 56" wide compartment over the wheel well.	$6,852
3120-0030	Officer 3/4 side body with 48" wide forward and 62" wide rearward extended compartmentation. Includes (1) 56" wide compartment over the wheel well.	$7,292
3120-0031	Officer 3/4 side body with 24" wide forward and 50" wide rearward enhanced extended compartmentation. Includes (1) 56" wide compartment over the wheel well.	$5,961
3120-0032	Officer 3/4 side body with 30" wide forward and 50" wide rearward enhanced extended compartmentation. Includes (1) 56" wide compartment over the wheel well.	$6,319
3120-0033	Officer 3/4 side body with 36" wide forward and 50" wide rearward enhanced extended compartmentation. Includes (1) 56" wide compartment over the wheel well.	$6,702
3120-0034	Officer 3/4 side body with 42" wide forward and 50" wide rearward enhanced extended compartmentation. Includes (1) 56" wide compartment over the wheel well.	$7,114
3120-0035	Officer 3/4 side body with 48" wide forward and 62" wide rearward enhanced extended compartmentation. Includes (1) 56" wide compartment over the wheel well.	$7,554
3120-0036	Officer side body with full height 24" wide forward and 36" wide rearward compartmentation. Includes (1) 33" wide compartment (forward) over the wheel well and (1) Zico Overhead Ladder Rack.	$14,181

3120-0037	Officer side body with full height 30" wide forward and 36" wide rearward compartmentation. Includes (1) 33" wide compartment (forward) over the wheel well and (1) Zico Overhead Ladder Rack.	$14,754
3120-0038	Officer side body with full height 36" wide forward and 36" wide rearward compartmentation. Includes (1) 33" wide compartment (forward) over the wheel well and (1) Zico Overhead Ladder Rack.	$15,366
3120-0039	Officer side body with full height 42" wide forward and 42" wide rearward compartmentation. Includes (1) 33" wide compartment (forward) over the wheel well and (1) Zico Overhead Ladder Rack.	$16,024
3120-0040	Officer side body with full height 48" wide forward and 48" wide rearward compartmentation. Includes (1) 33" wide compartment (forward) over the wheel well and (1) Zico Overhead Ladder Rack.	$16,725
3120-0041	Officer side body with full height 24" wide forward and 50" wide rearward extended compartmentation. Includes (1) 33" wide compartment (forward) over the wheel well and (1) Zico Overhead Ladder Rack.	$14,754
3120-0042	Officer side body with full height 30" wide forward and 50" wide rearward extended compartmentation. Includes (1) 33" wide compartment (forward) over the wheel well and (1) Zico Overhead Ladder Rack.	$15,328
3120-0043	Officer side body with full height 36" wide forward and 50" wide rearward extended compartmentation. Includes (1) 33" wide compartment (forward) over the wheel well and (1) Zico Overhead Ladder Rack.	$15,941
3120-0044	Officer side body with full height 42" wide forward and 56" wide rearward extended compartmentation. Includes (1) 33" wide compartment (forward) over the wheel well and (1) Zico Overhead Ladder Rack.	$16,599
3120-0045	Officer side body with full height 48" wide forward and 62" wide rearward extended compartmentation. Includes (1) 33" wide compartment (forward) over the wheel well and (1) Zico Overhead Ladder Rack.	$17,300
3120-0046	Officer side body with full height 24" wide forward and 50" wide rearward enhanced extended compartmentation. Includes (1) 33" wide compartment (forward) over the wheel well and (1) Zico Overhead Ladder Rack.	$15,018
3120-0047	Officer side body with full height 30" wide forward and 50" wide rearward enhanced extended compartmentation. Includes (1) 33" wide compartment (forward) over the wheel well and (1) Zico Overhead Ladder Rack.	$15,590
3120-0048	Officer side body with full height 36" wide forward and 50" wide rearward enhanced extended compartmentation. Includes (1) 33" wide compartment (forward) over the wheel well and (1) Zico Overhead Ladder Rack.	$16,202
3120-0049	Officer side body with full height 42" wide forward and 56" wide rearward enhanced extended compartmentation. Includes (1) 33" wide compartment (forward) over the wheel well and (1) Zico Overhead Ladder Rack.	$16,860
3120-0050	Officer side body with full height 48" wide forward and 62" wide rearward enhanced extended compartmentation. Includes (1) 33" wide compartment (forward) over the wheel well and (1) Zico Overhead Ladder Rack.	$17,562
3120-0051	Officer half side body with 36" wide forward and 36" wide rearward compartmentation. Includes adjustable ladder tracks and 30 degree rear body angle for greater angle of departure.	$4,706
3120-0052	Officer 3/4 side body with full height 24" wide forward and 36" wide rearward compartmentation. Includes (1) 56" wide compartment over the wheel well and 30 degree rear body angle for greater angle of departure.	$8,816
3120-0053	Officer 3/4 side body with full height 30" wide forward and 36" wide rearward compartmentation. Includes (1) 56" wide compartment over the wheel well and 30 degree rear body angle for greater angle of departure.	$9,095
3120-0054	Officer 3/4 side body with full height 36" wide forward and 36" wide rearward compartmentation. Includes (1) 56" wide compartment over the wheel well and 30 degree rear body angle for greater angle of departure.	$9,375
3120-0055	Officer side body with full height 24" wide forward and 36" wide rearward compartmentation. Includes (1) 33" wide compartment (forward) over the wheel well, (1) Zico Overhead Ladder Rack and 30 degree rear body angle for greater angle of departure.	$16,016
3120-0056	Officer side body with full height 30" wide forward and 36" wide rearward compartmentation. Includes (1) 33" wide compartment (forward) over the wheel well, (1) Zico Overhead Ladder Rack and 30 degree rear body angle for greater angle of departure.	$16,295
3120-0057	Officer side body with full height 36" wide forward and 36" wide rearward compartmentation. Includes (1) 33" wide compartment (forward) over the wheel well, (1) Zico Overhead Ladder Rack and 30 degree rear body angle for greater angle of departure.	$16,575
3120-0058	Stainless steel officer half side body with 48" wide forward and 48" wide rearward compartmentation (interior). Includes adjustable ladder tracks.	$5,911
3120-0059	Stainless steel officer half side body with 48" wide forward and 60" wide rearward compartmentation (interior). Includes adjustable ladder tracks.	$6,207
3120-0060	Stainless steel officer half side body with 60" wide forward and 60" wide rearward compartmentation (interior). Includes adjustable ladder tracks.	$6,325
3120-0061	Stainless steel officer 3/4 side body with full height 36" wide forward and 48" wide rearward compartmentation (interior). Includes (1) 60" wide compartment over the wheel well.	$6,455
3120-0062	Stainless steel officer 3/4 side body with full height 48" wide forward and 48" wide rearward compartmentation (interior). Includes (1) 60" wide compartment over the wheel well.	$7,387
3120-0063	Stainless steel officer 3/4 side body with full height 48" wide forward and 60" wide rearward compartmentation (interior). Includes (1) 60" wide compartment over the wheel well.	$7,759

3120-0064	Stainless steel officer 3/4 side body with full height 60" wide forward and 60" wide rearward compartmentation (interior). Includes (1) 60" wide compartment over the wheel well.	$7,904
3120-0065	Stainless steel officer side body with full height 36" wide forward and 48" wide rearward compartmentation (interior). Includes (1) 45" wide compartment (rearward) over the wheel well and (1) Zico Overhead Ladder Rack.	$16,905
3120-0066	Stainless steel officer side body with full height 48" wide forward and 48" wide rearward compartmentation (interior). Includes (1) 45" wide compartment (rearward) over the wheel well and (1) Zico Overhead Ladder Rack.	$18,398
3120-0067	Stainless steel officer side body with full height 48" wide forward and 60" wide rearward compartmentation (interior). Includes (1) 45" wide compartment (rearward) over the wheel well and (1) Zico Overhead Ladder Rack.	$21,010
3120-0068	Stainless steel officer side body with full height 60" wide forward and 60" wide rearward compartmentation (interior). Includes (1) 45" wide compartment (rearward) over the wheel well and (1) Zico Overhead Ladder Rack.	$19,225
3120-0069	Stainless steel officer side body with full height 48" wide forward and 60" wide rearward compartmentation (interior). Includes (1) 60" wide compartment over the wheel well. For use with in the hosebed area ladder storage.	$12,410
3120-0070	Stainless steel officer side body with full height 60" wide forward and 60" wide rearward compartmentation (interior). Includes (1) 60" wide compartment over the wheel well. For use with in the hosebed area or thru the tank ladder storage.	$12,648
3120-0080	Officer side body with full height 36" wide forward and 36" wide rearward compartmentation. Includes (1) 33" wide compartment (forward) over the wheel well and (1) Zico Overhead Ladder Rack.	$16,442
3120-0081	Officer side body with full height 42" wide forward and 42" wide rearward compartmentation. Includes (1) 33" wide compartment (forward) over the wheel well and (1) Zico Overhead Ladder Rack.	$17,146
3120-0082	Officer side body with full height 48" wide forward and 48" wide rearward compartmentation. Includes (1) 33" wide compartment (forward) over the wheel well and (1) Zico Overhead Ladder Rack.	$17,899
3120-0083	Officer side body with full height 36" wide forward and 36" wide rearward compartmentation. Includes (1) 56" wide compartment over the wheel well and one (1)ladder storage tunnel and access door at rear.	$12,705
3120-0084	Officer side body with full height 42" wide forward and 42" wide rearward compartmentation. Includes (1) 56" wide compartment over the wheel well and one (1)ladder storage tunnel and access door at rear.	$13,407
3120-0085	Officer side body with full height 48" wide forward and 48" wide rearward compartmentation. Includes (1) 56" wide compartment over the wheel well and one (1)ladder storage tunnel and access door at rear.	$14,159
3120-0086	Officer side body with full height 42" wide forward and 42" wide rearward compartmentation. Includes (1) 56" wide compartment over the wheel well.	$10,744
3120-0087	Officer side body with full height 48" wide forward and 48" wide rearward compartmentation. Includes (1) 56" wide compartment over the wheel well. For use with thru the tank ladder storage.	$11,496
3120-0088	Officer side body with full height 60" wide forward and 42" wide rearward compartmentation. Includes (1) 33" wide compartment (forward) over the wheel well and (1) Zico Overhead Ladder Rack.	$18,703
3120-0089	Officer side body with full height 60" wide forward and 42" wide rearward compartmentation. Includes (1) 56" wide compartment over the wheel well and one (1)ladder storage tunnel and access door at rear.	$14,966
3120-0090	Officer side body with full height 60" wide forward and 42" wide rearward compartmentation. Includes (1) 56" wide compartment over the wheel well. For use with thru the tank ladder storage.	$12,302
3120-0091	Officer half side body with 36" wide rearward compartmentation. Includes adjustable ladder tracks and 30 degree rear body angle for greater angle of departure.	$2,365
3120-0092	Officer 3/4 side body with full height 36" wide rearward compartmentation. Includes (1) 56" wide compartment over the wheel well and 30 degree rear body angle for greater angle of departure.	$7,954
3120-0093	Officer half side body with 36" wide rearward compartmentation. Includes adjustable ladder tracks.	$2,531
3120-0094	Officer 3/4 side body with full height 36" wide rearward compartmentation. Includes (1) 56" wide compartment over the wheel well.	$4,670
3120-0095	Officer full height side body with upper and lower compartmentation. Includes 42" wide forward and 42" wide rearward lower compartments and (3) opening upper compartments. For use with ladder storage thru tank.	$10,453
3120-0096	Officer side body with full height 42" wide forward and 42" wide rearward compartmentation. Includes (1) 56" wide compartment over the wheel well. For use with ladder storage thru tank.	$10,043
3120-0097	Officer full height side body with upper and lower compartmentation. Includes 48" wide forward and 48" wide rearward lower compartments and (3) opening upper compartments. For use with ladder storage thru tank.	$11,155
3120-0098	Officer side body with full height 48" wide forward and 48" wide rearward compartmentation. Includes (1) 56" wide compartment over the wheel well. For use with ladder storage thru tank.	$10,744
3120-0099	Officer side body with full height 42" wide forward and 56" wide rearward extended compartmentation. Includes (1) 56" wide compartment over the wheel well.	$10,616
3120-0100	Officer side body with full height 42" wide forward and 56" wide rearward enhanced extended compartmentation. Includes (1) 56" wide compartment over the wheel well.	$10,880
3120-0101	Officer side body with full height 48" wide forward and 62" wide rearward extended compartmentation. Includes (1) 56" wide compartment over the wheel well.	$11,319

3120-0102	Officer side body with full height 48" wide forward and 62" wide rearward enhanced extended compartmentation. Includes (1) 56" wide compartment over the wheel well.	$11,581
3120-0104	Stainless steel officer 3/4 side body with full height 36" wide forward and 48" wide rearward compartmentation (interior). Includes (1) 60" wide compartment over the wheel well.	$11,859
3120-0105	Stainless steel officer 3/4 side body with full height 48" wide forward and 48" wide rearward compartmentation (interior). Includes (1) 60" wide compartment over the wheel well.	$12,458
3120-0106	Stainless steel officer 3/4 side body with full height 60" wide forward and 60" wide rearward compartmentation (interior). Includes (1) 60" wide compartment over the wheel well.	$13,655
3120-0107	Stainless steel officer 3/4 side body with full height 48" wide forward and 60" wide rearward compartmentation (interior). Includes (1) 60" wide compartment over the wheel well.	$13,055
3120-0108	Stainless steel officer side body with full height 36" wide forward and 48" wide (interior) rearward compartmentation. Includes (1) 45" wide (interior) compartment (forward) over the wheel well and (1) Zico Overhead Ladder Rack.	$18,085
3120-0109	Stainless steel officer side body with full height 48" wide forward and 48" wide (interior) rearward compartmentation. Includes (1) 45" wide (interior) compartment (forward) over the wheel well and (1) Zico Overhead Ladder Rack.	$19,686
3120-0110	Stainless steel officer side body with full height 60" wide forward and 60" wide (interior) rearward compartmentation. Includes (1) 45" wide (interior) compartment (forward) over the wheel well and (1) Zico Overhead Ladder Rack.	$20,572
3120-0111	Stainless steel officer side body with full height 48" wide forward and 60" wide (interior) rearward compartmentation. Includes (1) 45" wide (interior) compartment (forward) over the wheel well and (1) Zico Overhead Ladder Rack.	$20,277
3120-0112	Stainless steel officer side body with full height 36" wide forward and 48" wide rearward (interior) compartmentation. Includes (1) 60" wide compartment over the wheel well. For use with in the hosebed ladder storage.	$11,045
3120-0113	Stainless steel officer side body with full height 48" wide forward and 48" wide rearward (interior) compartmentation. Includes (1) 60" wide compartment over the wheel well. For use with in the hosebed ladder storage.	$12,648
3120-0114	Stainless steel officer side body with full height 48" wide forward and 60" wide rearward (interior) compartmentation. Includes (1) 60" wide compartment over the wheel well. For use with in the hosebed ladder storage.	$13,027
3120-0115	Stainless steel officer side body with full height 60" wide forward and 60" wide rearward (interior) compartmentation. Includes (1) 60" wide compartment over the wheel well. For use with in the hosebed ladder storage.	$12,648
3120-0116	Stainless steel officer side body with full height 36" wide forward and 48" wide (interior) rearward compartmentation. Includes (1) 60" wide compartment over the wheel well and one (1) ladder storage tunnel and access door at rear with push-button latch.	$14,350
3120-0117	Stainless steel officer side body with full height 48" wide forward and 48" wide (interior) rearward compartmentation. Includes (1) 60" wide compartment over the wheel well and one (1) ladder storage tunnel and access door at rear with push-button latch.	$15,949
3120-0118	Stainless steel officer side body with full height 48" wide forward and 60" wide (interior) rearward compartmentation. Includes (1) 60" wide compartment over the wheel well and one (1) ladder storage tunnel and access door at rear with push-button latch.	$16,748
3120-0119	Stainless steel officer side body with full height 60" wide forward and 60" wide (interior) rearward compartmentation. Includes (1) 60" wide compartment over the wheel well and one (1) ladder storage tunnel and access door at rear with push-button latch.	$16,834
3120-0121	Officer side body with full height 36" wide forward and 36" wide rearward compartmentation. Includes (1) 56" wide compartment over the wheel well.	$9,992
3120-0123	Officer half side body with 60" wide forward and 42" wide rearward compartmentation. Includes adjustable ladder tracks.	$5,751
3120-0124	Officer 3/4 side body with full height 60" wide forward and 42" wide rearward compartmentation. Includes (1) 56" wide compartment over the wheel well.	$7,187
3120-0125	Officer 3/4 side body with upper and lower compartmentation. Includes 60" wide forward and 42" wide rearward lower compartments and (3) opening upper compartments.	$7,624
3120-0126	Officer side body with full height 60" wide forward and 42" wide rearward compartmentation. Includes (1) 56" wide compartment over the wheel well. For use with ladder storage thru tank.	$11,496
3120-0127	Officer full height side body with upper and lower compartmentation. Includes 60" wide forward and 42" wide rearward lower compartments and (3) opening upper compartments. For use with ladder storage thru tank.	$11,935
3120-0128	Officer side body with full height 60" wide forward and 42" wide rearward compartmentation. Includes (1) 33" wide compartment (forward) over the wheel well and (1) Zico Overhead Ladder Rack.	$17,146
3120-0131	Stainless steel officer side body with full height 24" wide forward and 48" wide (interior) rearward compartmentation. Includes (1) 60" wide compartment over the wheel well and one (1) ladder storage tunnel and access door at rear with push-button latch.	$12,748
3120-0132	Officer side body with full height 30" wide forward and 50" wide rearward extended compartmentation. Includes (1) 56" wide compartment over the wheel well and (1) 2-Arm Ladder Rack. The ladder rack is to be painted job color and includes amber lights on each end to visually indicate when the rack is in motion.	$27,295
3120-0134	Officer side body with full height 30" wide forward and 36" wide rearward compartmentation. Includes (1) 56" wide compartment over the wheel well. For use with over the hosebed storage rack.	$8,772

3120-0135	Officer side body with full height 36" wide forward and 36" wide rearward compartmentation. Includes (1) 56" wide compartment over the wheel well. For use with over the hosebed storage rack.	$9,397
3120-0137	Officer 3/4 side body with full height 50" wide enhanced extended rearward compartmentation. Includes (1) 56" wide compartment over the wheel well.	$5,506
3120-0138	Officer 3/4 side body with upper and lower compartmentation. Includes 24" wide forward and 36" wide rearward lower compartments and (3) opening upper compartments.	$5,535
3120-0139	Officer 3/4 side body with full height 24" wide forward and 36" wide rearward compartmentation. Includes (1) 56" wide compartment over the wheel well.	$5,126
3120-0140	Officer 3/4 side body with upper and lower compartmentation. Includes 30" wide forward and 36" wide rearward lower compartments and (3) opening upper compartments.	$5,893
3120-0141	Officer 3/4 side body with upper and lower compartmentation. Includes 36" wide forward and 36" wide rearward lower compartments and (3) opening upper compartments.	$6,276
3120-0142	Officer 3/4 side body with upper and lower compartmentation. Includes 42" wide forward and 42" wide rearward lower compartments and (3) opening upper compartments.	$6,687
3120-0143	Officer 3/4 side body with upper and lower compartmentation. Includes 48" wide forward and 48" wide rearward lower compartments and (3) opening upper compartments.	$7,127
3120-0144	Officer 3/4 side body with full height 30" wide forward and 36" wide rearward compartmentation. Includes (1) 56" wide compartment over the wheel well.	$5,485
3120-0145	Officer 3/4 side body with full height 36" wide forward and 36" wide rearward compartmentation. Includes (1) 56" wide compartment over the wheel well.	$5,866
3120-0146	Officer 3/4 side body with full height 42" wide forward and 42" wide rearward compartmentation. Includes (1) 56" wide compartment over the wheel well.	$6,277
3120-0147	Officer 3/4 side body with full height 48" wide forward and 48" wide rearward compartmentation. Includes (1) 56" wide compartment over the wheel well.	$6,717
3120-0148	Officer 3/4 side body with 24" wide forward and 50" wide rearward extended compartmentation. Includes (1) 56" wide compartment over the wheel well.	$5,699
3120-0149	Officer 3/4 side body with 30" wide forward and 50" wide rearward extended compartmentation. Includes (1) 56" wide compartment over the wheel well.	$6,056
3120-0150	Officer 3/4 side body with 36" wide forward and 50" wide rearward extended compartmentation. Includes (1) 56" wide compartment over the wheel well.	$6,442
3120-0151	Officer 3/4 side body with 42" wide forward and 56" wide rearward extended compartmentation. Includes (1) 56" wide compartment over the wheel well.	$6,852
3120-0152	Officer 3/4 side body with 48" wide forward and 62" wide rearward extended compartmentation. Includes (1) 56" wide compartment over the wheel well.	$7,292
3120-0153	Officer 3/4 side body with 24" wide forward and 50" wide rearward enhanced extended compartmentation. Includes (1) 56" wide compartment over the wheel well.	$5,961
3120-0154	Officer 3/4 side body with 30" wide forward and 50" wide rearward enhanced extended compartmentation. Includes (1) 56" wide compartment over the wheel well.	$6,319
3120-0155	Officer 3/4 side body with 36" wide forward and 50" wide rearward enhanced extended compartmentation. Includes (1) 56" wide compartment over the wheel well.	$6,702
3120-0156	Officer 3/4 side body with 42" wide forward and 56" wide rearward enhanced extended compartmentation. Includes (1) 56" wide compartment over the wheel well.	$7,114
3120-0157	Officer 3/4 side body with 48" wide forward and 62" wide rearward enhanced extended compartmentation. Includes (1) 56" wide compartment over the wheel well.	$7,554
3120-0158	Officer side body with full height 24" wide forward and 36" wide rearward compartmentation. Includes (1) 33" wide compartment over the wheel well and (1) Zico Overhead Ladder Rack.	$14,181
3120-0159	Officer side body with full height 30" wide forward and 36" wide rearward compartmentation. Includes (1) 33" wide compartment over the wheel well and (1) Zico Overhead Ladder Rack.	$14,754
3120-0160	Officer side body with full height 36" wide forward and 36" wide rearward compartmentation. Includes (1) 33" wide compartment over the wheel well and (1) Zico Overhead Ladder Rack.	$15,366
3120-0161	Officer side body with full height 42" wide forward and 42" wide rearward compartmentation. Includes (1) 33" wide compartment over the wheel well and (1) Zico Overhead Ladder Rack.	$16,024
3120-0162	Officer side body with full height 48" wide forward and 48" wide rearward compartmentation. Includes (1) 33" wide compartment over the wheel well and (1) Zico Overhead Ladder Rack.	$16,725
3120-0163	Officer side body with full height 24" wide forward and 50" wide rearward extended compartmentation. Includes (1) 33" wide compartment over the wheel well and (1) Zico Overhead Ladder Rack.	$14,754
3120-0164	Officer side body with full height 30" wide forward and 50" wide rearward extended compartmentation. Includes (1) 33" wide compartment over the wheel well and (1) Zico Overhead Ladder Rack.	$15,328
3120-0165	Officer side body with full height 36" wide forward and 50" wide rearward extended compartmentation. Includes (1) 33" wide compartment over the wheel well and (1) Zico Overhead Ladder Rack.	$15,941
3120-0166	Officer side body with full height 42" wide forward and 56" wide rearward extended compartmentation. Includes (1) 33" wide compartment over the wheel well and (1) Zico Overhead Ladder Rack.	$16,599
3120-0167	Officer side body with full height 48" wide forward and 62" wide rearward extended compartmentation. Includes (1) 33" wide compartment over the wheel well and (1) Zico Overhead Ladder Rack.	$17,300
3120-0168	Officer side body with full height 24" wide forward and 50" wide rearward enhanced extended compartmentation. Includes (1) 33" wide compartment over the wheel well and (1) Zico Overhead Ladder Rack.	$15,018

3120-0169	Officer side body with full height 30" wide forward and 50" wide rearward enhanced extended compartmentation. Includes (1) 33" wide compartment over the wheel well and (1) Zico Overhead Ladder Rack.	$15,590
3120-0170	Officer side body with full height 36" wide forward and 50" wide rearward enhanced extended compartmentation. Includes (1) 33" wide compartment over the wheel well and (1) Zico Overhead Ladder Rack.	$16,202
3120-0171	Officer side body with full height 42" wide forward and 56" wide rearward enhanced extended compartmentation. Includes (1) 33" wide compartment over the wheel well and (1) Zico Overhead Ladder Rack.	$16,860
3120-0172	Officer side body with full height 48" wide forward and 62" wide rearward enhanced extended compartmentation. Includes (1) 33" wide compartment over the wheel well and (1) Zico Overhead Ladder Rack.	$17,562
3120-0173	Officer 3/4 side body with full height 24" wide forward and 36" wide rearward compartmentation. Includes (1) 56" wide compartment over the wheel well and 30 degree rear body angle for greater angle of departure.	$8,816
3120-0174	Officer 3/4 side body with full height 30" wide forward and 36" wide rearward compartmentation. Includes (1) 56" wide compartment over the wheel well and 30 degree rear body angle for greater angle of departure.	$9,095
3120-0175	Officer 3/4 side body with full height 36" wide forward and 36" wide rearward compartmentation. Includes (1) 56" wide compartment over the wheel well and 30 degree rear body angle for greater angle of departure.	$9,375
3120-0176	Officer side body with full height 24" wide forward and 36" wide rearward compartmentation. Includes (1) 33" wide compartment over the wheel well and (1) Zico Overhead Ladder Rack. Rear bottom corner of truck will be angled 30 degrees for a greater rear angle of departure.	$16,016
3120-0177	Officer side body with full height 30" wide forward and 36" wide rearward compartmentation. Includes (1) 33" wide compartment over the wheel well, (1) Zico Overhead Ladder Rack and 30 degree rear body angle for greater angle of departure.	$16,295
3120-0178	Officer side body with full height 36" wide forward and 36" wide rearward compartmentation. Includes (1) 33" wide compartment over the wheel well, (1) Zico Overhead Ladder Rack and 30 degree rear body angle for greater angle of departure.	$16,575
3120-0179	Stainless steel officer 3/4 side body with full height 36" wide forward and 48" wide rearward compartmentation (interior). Includes (1) 60" wide compartment over the wheel well.	$6,455
3120-0180	Stainless steel officer 3/4 side body with full height 48" wide forward and 48" wide rearward compartmentation (interior). Includes (1) 60" wide compartment over the wheel well.	$7,387
3120-0181	Stainless steel officer 3/4 side body with full height 48" wide forward and 60" wide rearward compartmentation (interior). Includes (1) 60" wide compartment over the wheel well.	$7,759
3120-0182	Stainless steel officer 3/4 side body with full height 60" wide forward and 60" wide rearward compartmentation (interior). Includes (1) 60" wide compartment over the wheel well.	$7,904
3120-0183	Stainless steel officer side body with full height 36" wide forward and 48" wide rearward compartmentation (interior). Includes (1) 45" wide compartment over the wheel well and (1) Zico Overhead Ladder Rack.	$16,905
3120-0184	Stainless steel officer side body with full height 48" wide forward and 48" wide rearward compartmentation (interior). Includes (1) 45" wide compartment over the wheel well and (1) Zico Overhead Ladder Rack.	$18,398
3120-0185	Stainless steel officer side body with full height 48" wide forward and 60" wide rearward compartmentation (interior). Includes (1) 45" wide compartment over the wheel well and (1) Zico Overhead Ladder Rack.	$21,010
3120-0186	Stainless steel officer side body with full height 60" wide forward and 60" wide rearward compartmentation (interior). Includes (1) 45" wide compartment over the wheel well and (1) Zico Overhead Ladder Rack.	$19,225
3120-0187	Stainless steel officer side body with full height 48" wide forward and 60" wide rearward compartmentation (interior). Includes (1) 60" wide compartment over the wheel well. For use with in the hosebed area ladder storage.	$12,410
3120-0188	Stainless steel officer side body with full height 60" wide forward and 60" wide rearward compartmentation (interior). Includes (1) 60" wide compartment over the wheel well. For use with in the hosebed area or thru the tank ladder storage.	$12,648
3120-0189	Officer side body with full height 36" wide forward and 36" wide rearward compartmentation. Includes (1) 33" wide compartment over the wheel well and (1) Zico Overhead Ladder Rack.	$16,442
3120-0190	Officer side body with full height 42" wide forward and 42" wide rearward compartmentation. Includes (1) 33" wide compartment over the wheel well and (1) Zico Overhead Ladder Rack.	$17,146
3120-0191	Officer side body with full height 48" wide forward and 48" wide rearward compartmentation. Includes (1) 33" wide compartment over the wheel well and (1) Zico Overhead Ladder Rack.	$17,899
3120-0192	Officer side body with full height 36" wide forward and 36" wide rearward compartmentation. Includes (1) 56" wide compartment over the wheel well and one (1) storage tunnel.	$12,705
3120-0193	Officer side body with full height 42" wide forward and 42" wide rearward compartmentation. Includes (1) 56" wide compartment over the wheel well and one (1) storage tunnel.	$13,407
3120-0194	Officer side body with full height 48" wide forward and 48" wide rearward compartmentation. Includes (1) 56" wide compartment over the wheel well and one (1) storage tunnel.	$14,159
3120-0195	Officer side body with full height 42" wide forward and 42" wide rearward compartmentation. Includes (1) 56" wide compartment over the wheel well.	$10,744
3120-0196	Officer side body with full height 48" wide forward and 48" wide rearward compartmentation. Includes (1) 56" wide compartment over the wheel well.	$11,496
3120-0197	Officer side body with full height 60" wide forward and 42" wide rearward compartmentation. Includes (1) 33" wide compartment over the wheel well and (1) Zico Overhead Ladder Rack.	$18,703

3120-0198	Officer side body with full height 60" wide forward and 42" wide rearward compartmentation. Includes (1) 56" wide compartment over the wheel well and one (1) storage tunnel.	$14,966
3120-0199	Officer side body with full height 60" wide forward and 42" wide rearward compartmentation. Includes (1) 56" wide compartment over the wheel well.	$12,302
3120-0200	Officer 3/4 side body with full height 36" wide rearward compartmentation. Includes (1) 56" wide compartment over the wheel well and 30 degree rear body angle for greater angle of departure.	$7,954
3120-0201	Officer 3/4 side body with full height 36" wide rearward compartmentation. Includes (1) 56" wide compartment over the wheel well.	$4,670
3120-0202	Officer full height side body with upper and lower compartmentation. Includes 42" wide forward and 42" wide rearward lower compartments and (3) opening upper compartments. For use with ladder storage thru tank.	$10,453
3120-0203	Officer side body with full height 42" wide forward and 42" wide rearward compartmentation. Includes (1) 56" wide compartment over the wheel well.	$10,043
3120-0204	Officer full height side body with upper and lower compartmentation. Includes 48" wide forward and 48" wide rearward lower compartments and (3) opening upper compartments. For use with ladder storage thru tank.	$11,155
3120-0205	Officer side body with full height 48" wide forward and 48" wide rearward compartmentation. Includes (1) 56" wide compartment over the wheel well.	$10,744
3120-0206	Officer side body with full height 42" wide forward and 56" wide rearward extended compartmentation. Includes (1) 56" wide compartment over the wheel well.	$10,616
3120-0207	Officer side body with full height 42" wide forward and 56" wide rearward enhanced extended compartmentation. Includes (1) 56" wide compartment over the wheel well.	$10,880
3120-0208	Officer side body with full height 48" wide forward and 62" wide rearward extended compartmentation. Includes (1) 56" wide compartment over the wheel well.	$11,319
3120-0209	Officer side body with full height 48" wide forward and 62" wide rearward enhanced extended compartmentation. Includes (1) 56" wide compartment over the wheel well.	$11,581
3120-0210	Stainless steel officer 3/4 side body with full height 36" wide forward and 48" wide rearward compartmentation (interior). Includes (1) 60" wide compartment over the wheel well.	$11,859
3120-0211	Stainless steel officer 3/4 side body with full height 48" wide forward and 48" wide rearward compartmentation (interior). Includes (1) 60" wide compartment over the wheel well.	$12,458
3120-0212	Stainless steel officer 3/4 side body with full height 60" wide forward and 60" wide rearward compartmentation (interior). Includes (1) 60" wide compartment over the wheel well.	$13,655
3120-0213	Stainless steel officer 3/4 side body with full height 48" wide forward and 60" wide rearward compartmentation (interior). Includes (1) 60" wide compartment over the wheel well.	$13,055
3120-0214	Stainless steel officer side body with full height 36" wide forward and 48" wide (interior) rearward compartmentation. Includes (1) 45" wide (interior) compartment over the wheel well and (1) Zico Overhead Ladder Rack.	$18,085
3120-0215	Stainless steel officer side body with full height 48" wide forward and 48" wide (interior) rearward compartmentation. Includes (1) 45" wide (interior) compartment over the wheel well and (1) Zico Overhead Ladder Rack.	$19,686
3120-0216	Stainless steel officer side body with full height 60" wide forward and 60" wide (interior) rearward compartmentation. Includes (1) 45" wide (interior) compartment over the wheel well and (1) Zico Overhead Ladder Rack.	$20,572
3120-0217	Stainless steel officer side body with full height 48" wide forward and 60" wide (interior) rearward compartmentation. Includes (1) 45" wide (interior) compartment over the wheel well and (1) Zico Overhead Ladder Rack.	$20,277
3120-0218	Stainless steel officer side body with full height 36" wide forward and 48" wide rearward (interior) compartmentation. Includes (1) 60" wide compartment over the wheel well. For use with in the hosebed ladder storage.	$11,045
3120-0219	Stainless steel officer side body with full height 48" wide forward and 48" wide rearward (interior) compartmentation. Includes (1) 60" wide compartment over the wheel well. For use with in the hosebed ladder storage.	$12,648
3120-0220	Stainless steel officer side body with full height 48" wide forward and 60" wide rearward (interior) compartmentation. Includes (1) 60" wide compartment over the wheel well. For use with in the hosebed ladder storage.	$13,027
3120-0221	Stainless steel officer side body with full height 60" wide forward and 60" wide rearward (interior) compartmentation. Includes (1) 60" wide compartment over the wheel well. For use with in the hosebed ladder storage.	$12,648
3120-0222	Stainless steel officer side body with full height 36" wide forward and 48" wide (interior) rearward compartmentation. Includes (1) 60" wide compartment over the wheel well and one (1) ladder storage tunnel and access door at rear with push-button latch.	$14,350
3120-0223	Stainless steel officer side body with full height 48" wide forward and 48" wide (interior) rearward compartmentation. Includes (1) 60" wide compartment over the wheel well and one (1) ladder storage tunnel and access door at rear with push-button latch.	$15,949
3120-0224	Stainless Steel Officer side body with full height 48" wide forward and 60" wide (interior) rearward compartmentation. Includes (1) 60" wide compartment over the wheel well and one (1) ladder storage tunnel and access door at rear with push-button latch.	$16,748
3120-0225	Stainless steel officer side body with full height 60" wide forward and 60" wide (interior) rearward compartmentation. Includes (1) 60" wide compartment over the wheel well and one (1) ladder storage tunnel and access door at rear with push-button latch.	$16,834
3120-0226	Officer side body with full height 36" wide forward and 36" wide rearward compartmentation. Includes (1) 56" wide compartment over the wheel well.	$9,992
3120-0227	Officer 3/4 side body with full height 60" wide forward and 42" wide rearward compartmentation. Includes (1) 56" wide compartment over the wheel well.	$7,187

3120-0228	Officer 3/4 side body with upper and lower compartmentation. Includes 60" wide forward and 42" wide rearward lower compartments and (3) opening upper compartments.	$7,624
3120-0229	Officer side body with full height 60" wide forward and 42" wide rearward compartmentation. Includes (1) 56" wide compartment over the wheel well.	$11,496
3120-0230	Officer full height side body with upper and lower compartmentation. Includes 60" wide forward and 42" wide rearward lower compartments and (3) opening upper compartments. For use with ladder storage thru tank.	$11,935
3120-0231	Officer side body with full height 60" wide forward and 42" wide rearward compartmentation. Includes (1) 33" wide compartment over the wheel well and (1) Zico Overhead Ladder Rack.	$17,146
3120-0232	Officer side body with full height 36" wide forward and 36" wide rearward compartmentation. Includes (1) 56" wide compartment over the wheel well.	$9,397
3120-0234	Officer side body with full height 48" wide forward and 48" wide rearward compartmentation. Includes (1) 56" wide compartment over the wheel well.	$11,496
3120-0236	Overhead Ladder Rack to be offset forward includes shifting compartment (rearward) over the wheel well.	$556
3120-0238	Officer full height side body with upper and lower compartmentation. Includes 36" wide forward and 36" wide rearward lower compartments and (2) opening upper compartments. Includes (1) Zico Overhead Ladder Rack mounted centered between upper compartments.	$18,647
3120-0239	Officer side compartment top storage box (PR). Locate one forward and one rearward of the ladder rack. Boxes to be smooth plate and painted job color with diamond plate tops. The rearward box to have a rear vertically hinged door with push-button latch. Boxes to have (1) diamond plate lid each with push button latch.	$1,742
3120-0240	Officer 3/4 side body with upper and lower compartmentation. Includes 24" wide forward and 36" wide rearward lower compartments and (2) opening upper compartments.	$5,535
3120-0241	Compartment R1 to have rescue style interior compartment height.	$1,392
3120-0242	Officer side tunnel to hold: (1) 1500 gallon Fol-da-tank.	$584
3120-0243	Officer 3/4 side body with full height 42" wide forward and 48" wide rearward compartmentation. Includes (1) 56" wide compartment over the wheel well.	$6,277
3120-0244	Officer side body with full height 30" wide forward and 50" wide rearward extended compartmentation. Includes (1) 56" wide compartment over the wheel well and (1) 2-Arm Ladder Rack. The ladder rack is to be sanded DA finish and includes amber lights on each end to visually indicate when the rack is in motion.	$27,295
3120-0245	Officer side body with full height 24" wide forward and 36" wide rearward compartmentation. Includes (1) 56" wide compartment over the wheel well.	$8,200
3120-0246	Officer side body with full height 30" wide forward and 36" wide rearward compartmentation. Includes (1) 56" wide compartment over the wheel well.	$8,772
3120-0247	Officer side body with full height 24" wide forward and 50" wide rearward extended compartmentation. Includes (1) 56" wide compartment over the wheel well.	$8,772
3120-0248	Officer side body with full height 30" wide forward and 50" wide rearward extended compartmentation. Includes (1) 56" wide compartment over the wheel well.	$9,348
3120-0249	Officer side body with full height 36" wide forward and 50" wide rearward extended compartmentation. Includes (1) 56" wide compartment over the wheel well.	$9,958
3120-0250	Officer side body with full height 24" wide forward and 50" wide rearward enhanced extended compartmentation. Includes (1) 56" wide compartment over the wheel well.	$9,036
3120-0251	Officer side body with full height 30" wide forward and 50" wide rearward enhanced extended compartmentation. Includes (1) 56" wide compartment over the wheel well.	$9,609
3120-0252	Officer side body with full height 36" wide forward and 50" wide rearward enhanced extended compartmentation. Includes (1) 56" wide compartment over the wheel well.	$10,221
3120-0254	Officer side body with full height 52" wide forward and 52" wide rearward compartmentation. Includes (1) 56" wide compartment over the wheel well.	$11,496
3120-0255	Officer side body with full height 36" wide forward and 50" wide rearward compartmentation. Includes (1) 56" wide compartment over the wheel well.	$10,221
3120-0256	Officer side body with full height 30" wide forward and 50" wide rearward compartmentation. Includes (1) 56" wide compartment over the wheel well.	$9,609
3120-0257	Officer side body with full height 24" wide forward and 50" wide rearward compartmentation. Includes (1) 56" wide compartment over the wheel well.	$9,036
3120-0258	Officer 3/4 side body with full height 24" wide forward and 50" wide rearward compartmentation. Includes (1) 56" wide compartment over the wheel well.	$5,961
3120-0259	Officer 3/4 side body with full height 30" wide forward and 50" wide rearward compartmentation. Includes (1) 56" wide compartment over the wheel well.	$6,319
3120-0260	Officer 3/4 side body with full height 36" wide forward and 50" wide rearward enhanced extended compartmentation. Includes (1) 56" wide compartment over the wheel well.	$6,702
3120-0261	Officer half side body with 24" wide forward and 50" wide rearward compartmentation. Includes adjustable ladder tracks.	$4,939
3120-0262	Officer half side body with 30" wide forward and 50" wide rearward compartmentation. Includes adjustable ladder tracks.	$5,224
3120-0263	Officer half side body with 36" wide forward and 50" wide rearward enhanced extended compartmentation. Includes adjustable ladder tracks.	$5,530
3120-0264	Officer side body with full height 24" wide forward and 50" wide rearward compartmentation. Includes (1) 33" wide compartment over the wheel well and (1) Zico Overhead Ladder Rack.	$15,018
3120-0265	Officer side body with full height 30" wide forward and 50" wide rearward compartmentation. Includes (1) 33" wide compartment over the wheel well and (1) Zico Overhead Ladder Rack.	$15,590
3120-0266	Officer side body with full height 36" wide forward and 50" wide rearward compartmentation. Includes (1) 33" wide compartment over the wheel well and (1) Zico Overhead Ladder Rack.	$16,202

3120-0268	Officer side body with full height 42" wide forward and 56" wide rearward compartmentation. Includes (1) 56" wide compartment over the wheel well.	$10,834
3120-0269	Officer side body with full height 36" wide forward and 42" wide rearward compartmentation. Includes (1) 56" wide compartment over the wheel well and one (1)ladder storage tunnel and access door at rear.	$13,407
3120-0270	Officer side body with full height 42" wide forward and 56" wide rearward compartmentation. Includes (1) 33" wide compartment over the wheel well and (1) Zico Overhead Ladder Rack.	$16,599
3120-0271	Officer 3/4 side body with full height 42" wide forward and 56" wide rearward enhanced extended compartmentation. Includes (1) 56" wide compartment over the wheel well.	$7,114
3120-0272	Officer half side body with 42" wide forward and 56" wide rearward enhanced extended compartmentation. Includes adjustable ladder tracks.	$5,859
3120-0273	Officer side body with full height 36" wide forward and 50" wide rearward enhanced extended compartmentation. Includes (1) 20" wide compartment over the wheel well and (1) E-One center mounted Overhead Ladder Rack.	$16,202
3120-0274	Officer side body with full height 36" wide forward and 50" wide rearward enhanced extended compartmentation. Includes (1) 56" wide compartment over the wheel well.	$10,866
3120-0275	Officer side body with full height 42" wide forward and 56" wide rearward enhanced extended compartmentation. Includes (1) 56" wide compartment over the wheel well.	$11,569
3120-0276	Officer side body with full height 48" wide forward and 62" wide rearward enhanced extended compartmentation. Includes (1) 56" wide compartment over the wheel well.	$12,322
3120-0277	Officer side body with full height 60" wide forward and 56" wide rearward enhanced extended compartmentation. Includes (1) 56" wide compartment over the wheel well.	$13,127
3120-0278	Officer side body with full height 36" wide forward and 50" wide rearward enhanced extended compartmentation. Includes (1) 33" wide compartment over the wheel well and (1) Zico Overhead Ladder Rack.	$17,266
3120-0279	Officer side body with full height 42" wide forward and 56" wide rearward enhanced extended compartmentation. Includes (1) 33" wide compartment over the wheel well and (1) Zico Overhead Ladder Rack.	$17,969
3120-0280	Officer side body with full height 48" wide forward and 62" wide rearward enhanced extended compartmentation. Includes (1) 33" wide compartment over the wheel well and (1) Zico Overhead Ladder Rack.	$18,720
3120-0281	Officer side body with full height 60" wide forward and 56" wide rearward enhanced extended compartmentation. Includes (1) 33" wide compartment over the wheel well and (1) Zico Overhead Ladder Rack.	$19,526
3120-0282	Officer side body with full height 36" wide forward and 50" wide rearward enhanced extended compartmentation. Includes (1) 56" wide compartment over the wheel well and one (1) storage tunnel.	$13,529
3120-0283	Officer side body with full height 42" wide forward and 56" wide rearward enhanced extended compartmentation. Includes (1) 56" wide compartment over the wheel well and one (1) storage tunnel.	$14,233
3120-0284	Officer side body with full height 48" wide forward and 62" wide rearward enhanced extended compartmentation. Includes (1) 56" wide compartment over the wheel well and one (1) storage tunnel.	$14,985
3120-0285	Officer side body with full height 60" wide forward and 56" wide rearward enhanced extended compartmentation. Includes (1) 56" wide compartment over the wheel well and one (1) storage tunnel.	$15,787
3120-0286	Officer 3/4 side body with full height 30" wide forward and 36" wide rearward compartmentation. Includes (1) 56" wide compartment over the wheel well.	$5,270
3120-0287	Officer side body with upper and lower compartmentation. Includes 24" wide forward and 36" wide rearward lower compartments and (2) opening upper compartments. Includes (1) Zico Overhead Ladder Rack centered mounted between upper compartments.	$14,591
3120-0288	Officer full height side body with upper and lower compartmentation. Includes 42" wide forward and 42" wide rearward lower compartments and (2) opening upper compartments. Includes (1) Zico Overhead Ladder Rack mounted centered between upper compartments.	$16,434
3120-0290	Officer side body with full height 30" wide forward and 50" wide rearward enhanced extended compartmentation. Includes (1) 56" wide compartment over the wheel well and one (1) storage tunnel.	$12,877
3120-0291	Officer side body with full height 50" wide forward and 50" wide rearward enhanced extended compartmentation. Includes (1) 33" wide compartment over the wheel well and (1) Zico Overhead Ladder Rack.	$17,969
3120-0292	Officer side body with full height 56" wide forward and 56" wide rearward enhanced extended compartmentation. Includes (1) 33" wide compartment over the wheel well and (1) Zico Overhead Ladder Rack.	$18,719
3120-0293	Officer side body with full height 62" wide forward and 62" wide rearward enhanced extended compartmentation. Includes (1) 33" wide compartment over the wheel well and (1) Zico Overhead Ladder Rack.	$19,470
3120-0294	Officer side body with full height 50" wide forward and 50" wide rearward enhanced extended compartmentation. Includes (1) 56" wide compartment over the wheel well.	$11,569
3120-0295	Officer side body with full height 56" wide forward and 56" wide rearward enhanced extended compartmentation. Includes (1) 56" wide compartment over the wheel well.	$12,322
3120-0296	Officer side body with full height 62" wide forward and 62" wide rearward enhanced extended compartmentation. Includes (1) 56" wide compartment over the wheel well.	$13,071

3120-0297	Officer side body with full height 50" wide forward and 50" wide rearward enhanced extended compartmentation. Includes (1) 56" wide compartment over the wheel well and one (1) ladder storage tunnel and access door at rear.	$14,233
3120-0298	Officer side body with full height 56" wide forward and 56" wide rearward enhanced extended compartmentation. Includes (1) 56" wide compartment over the wheel well and one (1) ladder storage tunnel and access door at rear.	$14,984
3120-0299	Officer side body with full height 62" wide forward and 62" wide rearward enhanced extended compartmentation. Includes (1) 56" wide compartment over the wheel well and one (1) ladder storage tunnel and access door at rear.	$15,733
3120-0300	Officer side body with full height 42" wide forward and 56" wide rearward enhanced extended compartmentation. Includes (1) 56" wide compartment over the wheel well and one (1) storage tunnel and access door at rear.	$14,233
3120-0301	Officer side tunnel to hold: [#LOC].	$584
3120-0302	Officer half side body with 42" wide forward and 42" wide rearward compartmentation.	$5,022
3120-0303	Officer side body with full height 36" wide forward and 36" wide rearward compartmentation. Includes (1) 56" wide compartment over the wheel well and 30 degree rear body angle for greater angle of departure.	$9,702
3120-0304	Officer side body with full height 62" wide forward and 62" wide rearward enhanced extended compartmentation. Includes (1) 56" wide compartment over the wheel well.	$12,288
3120-0305	Stainless steel officer side body with full height 48" wide forward and 48" wide (interior) rearward compartmentation. Includes (1) 60" wide compartment over the wheel well and one (1) ladder storage tunnel and access door at rear with push-button latch. Upper area of ladder storage to have stop at 8' and be used for misc. storage.	$16,232
3120-0306	Officer side body with 62" wide full height forward enhanced extended compartment, 36" wide half height second forward compartment and 50" wide half height rearward compartmentation. Includes adjustable ladder tracks.	$16,934
3120-0307	Officer side body with full height 24" wide forward and 56" wide rearward extended compartmentation. Includes (1) 33" wide compartment over the wheel well and (1) Zico Overhead Ladder Rack.	$15,654
3120-0308	Officer side body with full height 24" wide forward and 50" wide rearward enhanced extended compartmentation. Includes (1) 56" wide compartment over the wheel well and one (1) ladder storage tunnel and access door at rear.	$14,810
3120-0309	Officer side body with upper and lower compartmentation. Includes 36" wide forward and 50" wide rearward extended lower compartmentation and (2) opening upper compartments with (1) Zico Overhead Ladder Rack centered between the compartments.	$19,262
3120-0310	Officer side body with full height 36" wide forward and 36" wide rearward compartmentation. Includes (1) 33" wide compartment over the wheel well, one (1) storage tunnel and (1) Zico Overhead Ladder Rack.	$19,106
3120-0311	Officer side body with full height 42" wide forward and 42" wide rearward compartmentation. Includes (1) 33" wide compartment over the wheel well, one (1) storage tunnel and (1) Zico Overhead Ladder Rack.	$19,808
3120-0312	Officer side body with full height 48" wide forward and 48" wide rearward compartmentation. Includes (1) 33" wide compartment over the wheel well, one (1) storage tunnel and (1) Zico Overhead Ladder Rack.	$20,560
3120-0313	Officer side body with full height 60" wide forward and 42" wide rearward compartmentation. Includes (1) 33" wide compartment over the wheel well, one (1) storage tunnel and (1) Zico Overhead Ladder Rack.	$21,365
3120-0314	Officer side body with full height 36" wide forward and 50" wide rearward enhanced extended compartmentation. Includes (1) 33" wide compartment over the wheel well, one (1) storage tunnel and (1) Zico Overhead Ladder Rack.	$19,927
3120-0315	Officer side body with full height 42" wide forward and 56" wide rearward enhanced extended compartmentation. Includes (1) 33" wide compartment over the wheel well, one (1) storage tunnel and (1) Zico Overhead Ladder Rack.	$20,632
3120-0316	Officer side body with full height 48" wide forward and 62" wide rearward enhanced extended compartmentation. Includes (1) 33" wide compartment over the wheel well, (1) Zico Overhead Ladder Rack and one (1) storage tunnel.	$21,383
3120-0317	Officer side body with full height 60" wide forward and 56" wide rearward enhanced extended compartmentation. Includes (1) 33" wide compartment over the wheel well, one (1) storage tunnel and (1) Zico Overhead Ladder Rack.	$22,189
3120-0318	Officer side body with full height 36" wide forward and 50" wide rearward enhanced extended compartmentation (2008 body design) with (1) 56" wide compartment over the wheel well and one (1) storage tunnel.	$18,438
3120-0319	Officer half side body with 20" wide forward and 50" wide rearward extended compartmentation. Includes adjustable ladder tracks.	$4,579
3120-0320	Officer side upper body extension. Does not include external upper doors. External framework and platework only. Platework shall be recessed.	$2,025
3120-0321	Stainless steel officer side body with full height 30" wide forward and 58" wide rearward enhanced extended compartmentation. Includes (1) 54" wide compartment over the wheel well.	$9,609
3120-0322	Stainless steel officer side body with full height 40" wide forward and 58" wide rearward enhanced extended compartmentation. Includes (1) 54" wide compartment over the wheel well.	$10,880
3120-0323	Stainless steel officer side body with full height 48" wide forward and 58" wide rearward enhanced extended compartmentation. Includes (1) 54" wide compartment over the wheel well.	$11,581
3120-0324	Stainless steel officer side body with full height 30" wide forward and 40" wide rearward compartmentation. Includes (1) 54" wide compartment over the wheel well.	$8,772

3120-0325	Stainless steel officer side body with full height 40" wide forward and 40" wide rearward compartmentation. Includes (1) 54" wide compartment over the wheel well.	$10,043
3120-0326	Stainless steel officer side body with full height 48" wide forward and 40" wide rearward compartmentation. Includes (1) 54" wide compartment over the wheel well.	$10,744
3120-0327	Stainless steel officer half side body with 30" wide forward and 40" wide rearward compartmentation. Includes adjustable ladder tracks.	$4,388
3120-0328	Stainless steel officer half side body with 40" wide forward and 40" wide rearward compartmentation. Includes adjustable ladder tracks.	$5,022
3120-0329	Stainless steel officer half side body with 48" wide forward and 40" wide rearward compartmentation. Includes adjustable ladder tracks.	$5,375
3120-0330	Stainless steel officer 3/4 side body with full height 30" wide forward and 40" wide rearward compartmentation. Includes (1) 54" wide compartment over the wheel well.	$5,485
3120-0331	Stainless steel officer 3/4 side body with full height 40" wide forward and 40" wide rearward compartmentation. Includes (1) 54" wide compartment over the wheel well.	$6,277
3120-0332	Stainless steel officer 3/4 side body with full height 48" wide forward and 40" wide rearward compartmentation. Includes (1) 54" wide compartment over the wheel well.	$6,717
3120-0333	Stainless steel officer side body with full height 30" wide forward and 40" wide rearward compartmentation. Includes (1) 38" wide compartment over the wheel well and (1) Zico Overhead Ladder Rack.	$14,754
3120-0334	Stainless steel officer side body with full height 40" wide forward and 40" wide rearward compartmentation. Includes (1) 38" wide compartment over the wheel well and (1) Zico Overhead Ladder Rack.	$16,024
3120-0335	Stainless steel officer side body with full height 48" wide forward and 40" wide rearward compartmentation. Includes (1) 38" wide compartment over the wheel well and (1) Zico overhead ladder rack.	$16,725
3120-0336	Stainless steel officer side body with full height 30" wide forward and 58" wide rearward enhanced extended compartmentation. Includes (1) 38" wide compartment over the wheel well and (1) Zico Overhead Ladder Rack.	$15,590
3120-0337	Stainless steel officer side body with full height 40" wide forward and 58" wide rearward enhanced extended compartmentation. Includes (1) 38" wide compartment over the wheel well and (1) Zico Overhead Ladder Rack.	$16,860
3120-0338	Stainless steel officer side body with full height 48" wide forward and 58" wide rearward enhanced extended compartmentation. Includes (1) 38" wide compartment over the wheel well and (1) Zico Overhead Ladder Rack.	$17,562
3120-0339	Officer half side stainless steel body with 30" wide forward and 58" wide rearward enhanced extended compartmentation. Includes adjustable ladder tracks.	$5,224
3120-0340	Officer half side stainless steel body with 40" wide forward and 58" wide rearward enhanced extended compartmentation. Includes adjustable ladder tracks.	$5,859
3120-0341	Officer half side stainless steel body with 48" wide forward and 58" wide rearward enhanced extended compartmentation. Includes adjustable ladder tracks.	$6,211
3120-0342	Officer 3/4 side stainless steel body with 30" wide forward and 58" wide rearward enhanced extended compartmentation. Includes (1) 54" wide compartment over the wheel well.	$6,319
3120-0343	Officer 3/4 side stainless steel body with 40" wide forward and 58" wide rearward enhanced extended compartmentation. Includes (1) 54" wide compartment over the wheel well.	$7,114
3120-0344	Officer 3/4 side stainless steel body with 48" wide forward and 58" wide rearward enhanced extended compartmentation. Includes (1) 54" wide compartment over the wheel well.	$7,554
3120-0346	Officer half side body with (2) forward compartments (48" and 30" wide) and one rearward area for locating of side tank dump.	$4,573
3120-0347	Officer half side body with (2) forward compartments (48" and 30" wide) and (1) rearward compartment (24").	$5,375
3120-0348	Officer 3/4 side body with (2) lower forward compartments (48" and 30" wide), (3) upper compartments (54") and one lower rearward area for locating of side tank dump.	$6,324
3120-0349	Officer 3/4 side body with (2) lower forward compartments (48" and 30" wide), (3) upper compartments (54") and (1) lower rearward compartment (24").	$7,127
3120-0350	Officer full height side body with (2) lower forward compartments (48" and 30" wide), (3) upper compartments (54") and one lower rearward area for locating of side tank dump.	$8,076
3120-0351	Officer full height side body with (2) lower forward compartments (48" and 30" wide), (3) upper compartments (54") and (1) lower rearward compartment (24").	$8,880
3120-0352	Officer full height side body with (2) full height, rescue style, forward compartments (48" and 30" wide), (1) upper compartment (61" and offset rearward of the rack opening) and one lower rearward area for locating of side tank dump.	$8,076
3120-0353	Officer full height side body with (2) full height, rescue style, forward compartments (48" and 30" wide), (1) upper compartment (61" and offset rearward of the rack opening) and (1) lower rearward compartment (24").	$8,880
3120-0356	Officer full height side body with (2) lower forward compartments (48" and 30" wide), (3) upper compartments (54") with rear compartment face access door for portable tank storage and one lower rearward area for locating of side tank dump.	$9,353
3120-0357	Officer full height side body with (2) lower forward compartments (48" and 30" wide), (3) upper compartments (54") with rear compartment face access door for portable tank storage and (1) lower rearward compartment (24").	$10,155
3120-0358	Officer half side body with 60" wide forward and 42" wide rearward compartmentation.	$5,751
3120-0359	Officer side body with full height 24" wide forward and 50" wide rearward enhanced extended compartmentation. Includes (1) 56" wide compartment over the wheel well and one (1) storage tunnel.	$12,224

3120-0362	Officer full height side body with (2) lower forward compartments (48" and 30" wide), (1) upper forward compartment (54") with rear compartment face access door (wired to door ajar) for enclosed ladder storage and (1) lower rearward compartment (24").	$11,429
3120-0363	Officer full height side body with (2) full height, rescue style, forward compartments (48" and 30" wide), (2) upper compartments (40" wide) and one lower rearward area for locating of side tank dump.	$8,076
3120-0364	Officer full height side body with (2) full height, rescue style, forward compartments (48" and 30" wide), (2) upper compartment (40" wide) and (1) lower rearward compartment (24").	$8,880
3120-0365	(1) officer side roof top compartments with extra width to inboard side. Includes hinged raised compartment lid with turn latches, grab handle(s) and gas shock hold open and drain line(s) ran to below body. The lid to have (1) bracket mounted LED light and to be wired to door ajar indicator in cab.	$4,988
3120-0366	Stainless steel officer side body with full height 48" wide forward and 48" wide rearward compartmentation with reduced upper depth. Includes (1) 54" wide compartment over the wheel well and (1) storage tunnel.	$14,159
3120-0367	Stainless steel officer side body with full height 54" wide forward and 54" wide rearward compartmentation with reduced upper depth. Includes (1) 54" wide compartment over the wheel well and (1) storage tunnel.	$15,293
3120-0368	Stainless steel officer side body with full height 60" wide forward and 60" wide rearward compartmentation with reduced upper depth. Includes (1) 54" wide compartment over the wheel well and (1) storage tunnel.	$16,427
3120-0369	Stainless steel officer side body with full height 48" wide forward and 48" wide rearward compartmentation. Includes 54" wide compartment over the wheel well and a dual arm hydraulic overhead ladder rack.	$11,496
3120-0370	Stainless steel officer side body with full height 54" wide forward and 54" wide rearward compartmentation. Includes 54" wide compartment over the wheel well and a dual arm hydraulic overhead ladder rack.	$12,416
3120-0371	Stainless steel officer side body with full height 60" wide forward and 60" wide rearward compartmentation. Includes 54" wide compartment over the wheel well and a dual arm hydraulic overhead ladder rack.	$13,337
3120-0377	Officer half side tandem body with 30" wide forward and 30" wide rearward compartmentation.	$6,862
3120-0378	Officer half side tandem body with 42" wide forward and 42" wide rearward compartmentation.	$7,496
3120-0379	Officer half side tandem body with 60" wide forward and 54" wide rearward compartmentation.	$8,225
3120-0380	Officer 3/4 side tandem body with full height 30" wide forward and 30" wide rearward compartmentation. Includes (2) 51.5" wide compartments over the wheel well.	$7,946
3120-0381	Officer 3/4 side tandem body with full height 42" wide forward and 42" wide rearward compartmentation. Includes (2) 51.5" wide compartments over the wheel well.	$8,737
3120-0382	Officer 3/4 side tandem body with full height 60" wide forward and 54" wide rearward compartmentation. Includes (2) 51.5" wide compartments over the wheel well.	$9,646
3120-0383	Officer side tandem body with upper and lower compartmentation. Includes 30" wide forward and 30" wide rearward compartments and (4) opening upper compartments.	$11,641
3120-0384	Officer side tandem body with upper and lower compartmentation. Includes 42" wide forward and 42" wide rearward compartments and (4) opening upper compartments.	$12,913
3120-0385	Officer side tandem body with upper and lower compartmentation. Includes 60" wide forward and 54" wide rearward compartments and (4) opening upper compartments.	$14,394
3120-0386	Officer side tandem body with upper and lower compartmentation. Includes 30" wide forward and 30" wide rearward compartments and (4) opening upper compartments. Includes overhead rack opening centered between upper compartments.	$12,105
3120-0387	Officer side tandem body with upper and lower compartmentation. Includes 42" wide forward and 42" wide rearward compartments and (4) opening upper compartments. Includes overhead rack opening centered between upper compartments.	$13,428
3120-0388	Officer side tandem body with upper and lower compartmentation. Includes 60" wide forward and 54" wide rearward compartments and (4) opening upper compartments. Includes overhead rack opening centered between upper compartments.	$14,970
3120-0389	Officer side tandem body with full height 30" wide forward and 30" wide rearward compartmentation. Includes (2) 51.5" wide compartments over the wheel well.	$11,233
3120-0390	Officer side tandem body with full height 42" wide forward and 42" wide rearward compartmentation. Includes (2) 51.5" wide compartments over the wheel well.	$12,503
3120-0391	Officer side tandem body with full height 60" wide forward and 54" wide rearward compartmentation. Includes (2) 51.5" wide compartments over the wheel well.	$13,955
3120-0392	Officer side tandem body with full height 30" wide forward and 30" wide rearward compartmentation. Includes (2) 42" wide compartments over the wheel well and overhead rack opening centered between upper compartments.	$11,680
3120-0393	Officer side tandem body with full height 42" wide forward and 42" wide rearward compartmentation. Includes (2) 42" wide compartments over the wheel well and overhead rack opening centered between upper compartments.-	$13,002
3120-0394	Officer side tandem body with full height 60" wide forward and 54" wide rearward compartmentation. Includes (2) 42" wide compartments over the wheel well and overhead rack opening centered between upper compartments.	$14,514
3120-0401	Officer side body with full height 42" wide forward and 50" wide rearward compartmentation. Includes (1) 33" wide compartment over the wheel well and (1) Zico Overhead Ladder Rack.	$16,401
3120-0402	Officer half side tandem body with with 42" wide forward and one rearward area for locating of side tank dump rearward of the wheel well.	$7,759

3120-0403	Officer side body with full height 60" wide forward and 56" wide rearward compartmentation. Includes (1) 56" wide compartment over the wheel well and one (1) storage tunnel located behind the upper (3) compartment back walls.	$14,966
3120-0404	Officer half side body with 36" wide forward and 31" wide rearward compartmentation. Includes adjustable ladder tracks mounted to outside of hosebed 3x3 and to run full height for max adjustments..	$4,697
3120-0405	Officer side body with full height 46" wide forward and 56" wide rearward enhanced extended compartmentation. Includes (1) 56" wide compartment over the wheel well.	$12,322
3120-0406	Officer side body with full height 50" wide forward and 50" wide rearward compartmentation. Includes (1) 33" wide compartment over the wheel well and (1) Zico Overhead Ladder Rack.	$18,703
3120-0407	Officer side body with full height 42" wide forward and 56" wide rearward enhanced extended compartmentation. Includes (1) 56" wide compartment over the wheel well. Rescue Pumper style compartments for use with low hosebed.	$13,142
3120-0408	Officer side body with full height 36" wide forward and 50" wide rearward enhanced extended compartmentation. Includes (1) 56" wide compartment over the wheel well and one (1) storage tunnel area directly behind the upper compartment area (accessed from the rear end assembly).	$11,234
3120-0410	Officer side body with full height 60" wide forward and 62" wide rearward enhanced extended compartmentation. Includes (1) 56" wide compartment over the wheel well.	$13,528
3120-0411	Officer side body with full height 42" wide forward and 56" wide rearward enhanced extended compartmentation. Includes (1) 56" wide compartment over the wheel well.	$12,093
3120-0412	2-Arm Ladder Rack on Officer Side. The ladder rack includes amber lights on each end to visually indicate when the rack is in motion. Restricts the top folding step (if optioned) from closing completely. Includes mounting bracket (matching rear compartment face or compartment wrap finish) for components mounted on rear compartment face including the stop/tail/turn lights.	$14,506
3120-0413	Officer side body with full height 60" wide forward and 56" wide rearward compartmentation. Includes (1) 33" wide compartment over the wheel well and (1) Zico Overhead Ladder Rack.	$18,703
3120-0414	Officer half side body with (2) forward compartments (39" and 39" wide) and (1) rearward compartment (24").	$6,425
3120-0415	Officer full height side body with upper and lower compartmentation. Includes 48" wide forward and 62" wide enhanced extended rearward lower compartments and (3) opening upper compartments and (1) Zico Overhead Ladder Rack. Upper compartments to be (1) 56" wide forward, Overhead ladder rack, (2) 45" wide compartments rearward of rack.	$18,553
3120-0416	Officer full height side body with upper and lower compartmentation. Includes 60" wide forward and 42" wide rearward lower compartments and (3) opening upper compartments and (1) Zico Overhead Ladder Rack.	$17,585
3120-0417	Officer side body with full height 60" wide forward and 56" wide rearward compartmentation. Includes (1) 56" wide compartment over the wheel well. For use with ladders stored in hosebed.	$12,302
3120-0418	Officer 3/4 side body with full height 42" wide forward and 56" wide rearward enhanced extended compartmentation. Includes (1) 56" wide compartment over the wheel well. Compartments raised 8" due to roll-up doors to allow for addtional storage room.	$10,829
3120-0420	Officer side body with full height 36" wide forward and 45" wide rearward compartmentation. Includes (1) 56" wide compartment over the wheel well.	$10,787
3120-0421	Officer side diamond plate roof top compartment. Includes (2) hinged lift-up access doors with turn latches and grab handle(s) and (1) vertical hinged access door at the rear with push button latch to be. Each lid to have (1) bracket mounted LED light and to be wired to door ajar indicator in cab.	$2,092
3120-0423	Officer side body with full height 32" wide forward and 50" wide rearward compartmentation. Includes (1) 56" wide compartment over the wheel well and one (1) storage tunnel beside the water tank.	$9,797
3120-0424	Officer side body with full height 54" wide forward and 48" wide rearward compartmentation. Includes (1) 56" wide compartment over the wheel well and one (1) storage tunnel located behind the upper (3) compartment back walls.	$14,194
3120-0425	Officer side body with half height 36" wide forward (above fuel fill area) and full height 50" wide rearward enhanced extended compartmentation. Includes (1) 56" wide compartment over the wheel well. Area below forward compartment will be for mounting of fuel fill.	$10,221
3120-0426	Officer side body with full height 26" and 56" wide forward compartments and 56" wide rearward compartmentation. Includes (1) 56" wide compartment over the wheel well and one (1) storage tunnel.	$16,214
3120-0427	Officer side body with full height 60" wide front and 54" wide rear compartments. Includes (1) 60" wide compartment over the wheel well and one (1) storage tunnel located behind reduced upper depth compartments. SS eMAX only.	$18,257
3120-0428	Officer side body with full height 36" wide forward and 50" wide rearward enhanced extended compartmentation. Includes (1) 33" wide compartment over the wheel well and (1) Zico Overhead Ladder Rack. Area below forward compartment will be for mounting of fuel fill.	$17,266
3120-0429	Officer side tandem body with upper and lower compartmentation. Includes 60" wide forward and 54" wide rearward compartments and (1) opening forward upper compartment with painted panels rearward.	$15,405
3120-0437	Rear aluminum smooth plate painted job color vertical hinged door on officer side roof top compartments. Includes thumb latch and wiring for door ajar switch.	$200
3120-0438	Stainless steel officer side body with full height 36" wide forward and 48" wide rearward compartmentation. Includes 54" wide compartment over the wheel well and a dual arm hydraulic overhead ladder rack.	$11,540

3120-0439	Officer side body with full height 26" and 56" wide forward and 56" wide rearward compartmentation. Includes (1) 33" wide compartment over the wheel well and (1) Zico Overhead Ladder Rack.	$19,978
3120-0441	Officer half side body with 36" wide forward and 56" wide rearward enhanced extended compartmentation. Includes adjustable ladder tracks.	$5,859
3120-0442	Officer side tandem body with upper and lower compartmentation. Includes 30" wide forward and 54" wide rearward compartments and (4) opening upper compartments. Includes overhead rack opening centered between upper compartments. Includes offseting upper compartments forward due to deck gun location and access panel on upper rear compartment face to deck gun piping.	$13,466
3120-0443	(1) officer side roof top compartment forward of hard suction storage area and (2) roof top comaprtments over hard suction storage area. Includes hinged raised compartment lids with turn latches and grab handle(s). The lids to have (1) bracket mounted LED light and to be wired to door ajar indicator in cab. Includes partition between roof top compartment and hard suction storage area. Floor to be provided above the hard suction storage area to use remaining area above.	$2,750
3120-0444	Officer half side body with 36" wide forward and 56" wide rearward enhanced extended compartmentation. Includes adjustable ladder tracks. 8" compartment raise to allow for taller opening with roll-up doors and smooth plate above wheel well area.	$6,316
3120-0445	Officer side tandem body with 60" wide forward and 54" wide rearward compartmentation. Forward compartment to be full height, rearward to be half height.	$10,135
3120-0446	Officer side diamond plate roof top compartment. Includes smooth plate painted vertical hinged access door at the rear with push button latch to be wired to door ajar indicator in cab.	$1,452
3120-0447	Officer side body with full height 54" wide forward and 36" wide rearward compartmentation. Includes (1) 33" wide compartment over the wheel well and (1) Zico Overhead Ladder Rack.	$17,526
3120-0448	Officer side roof top assembly. Does not include external upper doors or internal platework. External framework and platework only.	$1,459
3120-0449	Officer side body with full height 60" wide forward and 56" wide rearward compartmentation. Includes (1) 56" wide compartment over the wheel well.	$12,302
3120-0450	Officer half side body with 36" wide forward and 36" wide rearward compartmentation. Includes 30 degree rear body angle for greater angle of departure.	$4,706
3120-0451	Officer 3/4 height side body with 66" wide forward and 42" wide rearward compartmentation. Includes (1) 56" wide compartment over the wheel well. For use with custom chassis only.	$7,347
3120-0452	Officer full height side body with 66" wide forward and 42" wide rearward compartmentation. Includes (1) 56" wide compartment over the wheel well. For use with custom chassis only.	$9,129
3120-0453	Officer 3/4 side tandem body with full height 42" wide forward and 59" wide rearward compartmentation. Includes (2) 51.5" wide compartments over the wheel well.	$9,827
3120-0456	Officer side body with full height 26" and 56" wide forward compartments and 56" wide rearward compartmentation. Includes (1) 56" wide compartment over the wheel well.	$13,584
3120-0457	Stainless steel officer side body with full height 48" wide forward and 70" wide rearward enhanced extended compartmentation. Includes (1) 54" wide compartment over the wheel well.	$12,450
3120-0458	Officer high side stainless steel body with 60" front and 60" rear. Five compartments, tandem axle. For use with single arm overhead ladder rack.	$16,513
3120-0460	Officer side tandem body with upper and lower compartmentation. Includes 30" wide forward and 54" wide rearward compartments and (4) opening upper compartments. Includes overhead rack opening centered between upper compartments. Includes offseting upper compartments forward due to deck gun location and access panel on upper rear compartment face to deck gun piping.	$13,466
3120-0461	2-arm ladder rack on officer side. The ladder rack includes Whelen 500 series TIR6 amber lights on each end to visually indicate when the rack is in motion. Restricts the top folding step (if optioned) from closing completely. Includes mounting bracket (if required, matching rear compartment face or compartment wrap finish) for components mounted on rear compartment face.	$15,010
3120-0462	Officer side roof top compartment contents: (2) 6" x 10' hard suction hoses (not included) stored horizontally. Includes stop bracket rearward of hard suction hoses.	$993
3120-0463	Officer side diamond plate roof top compartment. Includes verticay hinged access door at the rear with a "D-Ring" latch handle to be wired to door ajar indicator in cab.	$1,474
3120-0464	Stainless steel officer half side body with 36" wide front and 40" wide rear and 60" wide fender panel.	$5,122
3120-0465	Officer side tandem body with full height (1) 60" wide forward and (1) 60" wide rearward compartmentation. For use with Rear Mount pump.	$17,276
3120-0466	Officer side body with upper and lower compartmentation. Includes 36" wide forward and 36" wide rearward lower compartments and (3) opening upper compartments with (1) 33" wide compartment over the wheel well and (1) Zico Overhead Ladder Rack.	$15,766
3120-0467	Stainless steel officer side body with full height 60" wide forward and 60" wide rearward compartmentation. Includes (1) 54" wide compartment over the wheel well.	$13,166
3120-0468	Stainless steel officer side body with full height 48" wide forward and 58" wide rearward enhanced extended compartmentation. Includes (1) 60" wide compartment over the wheel well.	$12,015
3120-0469	Stainless steel officer side body with full height 54" wide forward and 54" wide rearward compartmentation with custom size reduced upper depth. Includes (1) 54" wide compartment over the wheel well and (1) custom size storage tunnel.	$15,807
3120-0470	Stainless steel officer side body with full height 48" wide forward and 54" wide rearward compartmentation. Includes (1) 54" wide compartment over the wheel well.	$11,581

3120-0471	Officer side tandem body with (2) 34" wide forward and 54" wide rearward compartmentation. (1) forward compartment to be full height, (1) forward and rearward to be half height.	$10,721
3120-0472	Officer 3/4 side body with full height 48" wide forward and 62" wide rearward enhanced extended compartmentation. Includes (1) 56" wide compartment over the wheel well and one (1) storage tunnel.	$13,804
3120-0473	(2) officer side roof top compartments with removable floors and extra width to inboard side. Includes hinged raised compartment lids with turn latches, grab handle(s) and gas shock hold open and drain line(s) ran to below body. Each lid to have (1) bracket mounted LED light and to be wired to door ajar indicator in cab.	$6,222
3120-0474	Rear aluminum smooth plated painted [#COL] vertically hinged door on officer side roof top compartments. Includes thumb latch and wiring for door ajar switch.	$200
3120-0475	Stainless steel officer side body with full height 60" wide forward and 60" wide rearward compartmentation. Includes (1) 54" wide compartment over the wheel well. Upper compartment depth only 12" IPO standard 14" due to 3-section and roof ladders in tunnel.	$13,166
3120-0476	Officer side body with full height 60" wide front and 54" wide rear compartments. Includes (1) 44" wide compartment over the wheel well and one (1) Zico overhead ladder rack. SS eMAX only.	$22,817
3120-0477	(2) Officer side roof top compartments. Includes hinged raised aluminum smooth plate with black Scorpion coating (IPOS diamond plate) compartment lids with turn latches and grab handle(s). Each lid to have (1) bracket mounted LED light and to be wired to door ajar indicator in cab.	$2,814
3120-0478	Officer side tandem body with 60" wide full height forward compartment. Rearward of the forward compartment to 3/4 height with 54" wide rearward compartmentation. Includes (2) 51.5" wide compartments over the wheel well.	$11,499
3120-0479	Officer side body with full height/full depth 30/60" wide front and 54" wide rear compartments. Includes (1) 60" wide compartment over the wheel well. SS eMAX only.	$16,573
3120-0480	Officer side body with full height 30/60" wide front and 54" wide rear compartments. Includes (1) 44" wide compartment over the wheel well, with Zico overhead ladder rack. SS eMAX only.	$24,373
3120-0481	Officer side body with full height 30/60" wide front and 54" wide rear compartments. Includes (1) 60" wide compartment over the wheel well and one (1) storage tunnel located behind reduced upper depth compartments. SS eMAX only.	$19,781
3120-0482	Officer side body with full height 50" wide forward and 42" wide rearward compartmentation. Includes (1) 33" wide compartment over the wheel well, (1) Zico overhead ladder rack. Rear perimeter or body raised 3" for improved departure angle.	$17,526
3120-0483	Officer full height side body with upper and lower compartmentation. Includes 42" wide forward and 56" wide rearward lower enhanced compartmentation and (3) opening upper compartments. For use with ladder storage in the hosebed.	$10,880
3120-0485	Stainless steel officer half side body with 30" wide front and 40" wide rear and 60" wide fender panel. For use with suicide hinged R1 door (if applicable).	$5,122
3120-0486	Vertical and horizontal partitions located in officer side roof top compartment. Vertical partition located rearward of electric cord reel and horizontal partition located over DOT bottles. Floor to be provided above the DOT bottles to use remaining area above.	$1,192
3120-0487	Officer side body with full height 48" wide forward and 56" wide rearward enhanced extended compartmentation. Includes (1) 56" wide compartment over the wheel well.	$12,322
3120-0488	Vertical door stop for storage tunnel door.	$116
3120-0489	Officer side roof top compartment contents: (1) 10' hard suction hose (not included) stored horizontal. Includes stop bracket rearward of hard suction hoses and Nylatron compartment flooring.	$500
3120-0490	(2) officer side roof top compartments with extra width to inboard side. Includes hinged raised compartment lids with turn latches, grab handle(s) and gas shock hold open and drain line(s) ran to below body. Each lid to have (1) bracket mounted LED light and to be wired to door ajar indicator in cab. Compartment lid construction shall be aluminum smooth plate IPO diamond plate painted Black Scorpion (rough finish).	$5,366
3120-0491	Officer side body with upper and lower compartmentation. Includes 42" wide forward and 42" wide rearward lower compartments, (3) opening upper compartments. Includes (1) 33" wide compartment over the wheel well and (1) Zico Overhead Ladder Rack. Smooth plate compartment top painted black durabak.	$17,200
3120-0492	Officer 3/4 side body with (3) full height, rescue style, (2) forward compartments (48" and 30" wide) and (1) rearward compartment (24"). Includes (1) 56" wide compartment over the wheel well.	$7,552
3120-0493	Officer 3/4 side tandem stainless steel body with 35" front and 35" rear for flat back body design. Includes (2) 42" wide compartments over rear tandem wheels, with side dump valve between.	$11,255
3120-0494	Officer side roof top compartment. Includes vertically hinged access door at the rear with push button latch to be wired to door ajar indicator in cab.	$1,452
3120-0495	(2) officer side roof top compartments with extra width to inboard side. Includes hinged raised compartment lids with turn latches, grab handle(s) and gas shock hold open and drain line(s) ran to below body. Each lid to have (2) bracket mounted LED lights and to be wired to door ajar indicator in cab.	$5,076
3120-0496	Officer side tandem body with full height 30" wide forward and 30" wide rearward compartmentation. Includes (2) 42" wide compartments over the wheel well and overhead rack opening centered between upper compartments.	$12,429
3120-0498	Stainless steel officer side body with full height 48" wide forward and 48" wide rearward compartmentation. Includes (1) 54" wide compartment over the wheel well.	$11,351
3120-0499	Officer 1/2 side tandem stainless steel tanker body with 60" front and 60" rear for flat back body design. Includes (2) 55" wide tandem wheel fender panels.	$12,805

3120-0500	Officer side body with full height 24" wide forward and 36" wide rearward compartmentation. Includes (1) 56" wide compartment over the wheel well. Rear bottom corner of truck will be angled 30 degrees for a greater rear angle of departure.	$9,341
3120-0501	Officer side body with full height 36" wide forward and 62" wide rearward enhanced extended compartmentation. Includes (1) 56" wide compartment over the wheel well and one (1) storage tunnel.	$13,795
3120-0502	Officer full height side body with 36" wide forward and 48" wide rearward compartmentation. Includes (2) 28.5" wide compartments over the wheel well for the installation of Zico Overhead Ladder Rack and one forward area for side tank dump. For use with custom chassis only.	$9,333
3120-0503	Officer side tandem body with upper and lower compartmentation. Includes 30" wide forward full height and 30" wide low rearward compartments and (2) opening upper compartments. Includes offseting upper compartments forward due to deck gun location and access panel on upper rear compartment face to deck gun piping.	$12,920
3120-0504	Officer side body with full height 48" wide forward and 48" wide rearward compartmentation. Includes (1) 33" wide compartment over the wheel well and (1) Zico Overhead Ladder Rack. Ladder rack controls to be located on officer side rear compartment face above tail lights. Compartment material to be 5083-H321.	$18,697
3120-0505	Officer 3/4 height side body with 42" wide and 20" wide forward compartments and 42" wide rearward compartment. Includes (1) 56" wide compartments over the wheel well. For use with custom chassis only.	$7,512
3120-0508	Officer side ERV body with full height 37" forward and 52" rearward. Includes (1) 56" wide compartment over the wheel well. Includes (2) roof top compartments with hinged raised lids with thumb latches, grab handle(s), and gas shock hold open and drain line(s) ran to below body.Eack lid to have (1) bracket mounted LED light and to be wired to door ajar indicator in cab.	$17,858
3120-0509	Officer side body with full height 24" wide forward and 36" wide rearward compartmentation. Includes (1) 56" wide compartment over the wheel well.	$9,341
3120-0510	Officer half side body with 38" wide forward and 56" wide rearward compartment. Includes adjustable ladder tracks.	$6,151
3120-0511	The rear body corner on the right side to extend full height and a smooth plate inner panel.	$180
3120-0512	Notch compartment R2 in upper back wall rearward due to the 5" rear suction and provide a cover box.	$311
3120-0513	(2) Officer side roof top compartments. Includes hinged raised compartment lids with thumb latches and grab handle(s). Each lid to have (1) bracket mounted LED light and to be wired to door ajar indicator in cab.	$2,496
3120-0514	Officer half side tandem body with (2)41" wide forward and (2)32" wide rearward compartmentation.	$11,110
3120-0515	Stainless steel officer side body with full height 48" wide forward and 54" wide rearward compartmentation with reduced upper depth. Includes (1) 60" wide compartment over the wheel well.	$11,178
3120-0516	Stainless steel officer side body with half height 40" wide forward and 40" wide rearward compartmentation.	$9,114
3120-0517	Stainless steel officer side body with full height 40" wide forward and 48" wide rearward compartmentation. Includes (1) 60" wide compartment over the wheel well.	$10,744
3120-0519	Officer side roof top compartment contents: (1) 12'-14'+ hard suction hose (not included) stored horizontal. Includes Nylatron compartment flooring. Length of capacity depends on body configuration.	$582
3120-0520	Officer side body with full height 48" wide forward and 62" wide rearward compartmentation. Includes (1) 56" wide compartment over the wheel well.	$11,581
3120-0521	Stainless steel officer side body with full height 48" wide forward and 58" wide rearward enhanced extended compartmentation. Includes (1) 60" wide compartment over the wheel well.	$11,783
3120-0522	Officer 3/4 side body with full height 36" wide forward and 42" wide rearward compartmentation. Includes (1) 56" wide compartment over the wheel well.	$6,980
3120-0524	Officer side body with full height 54" wide forward and 48" wide rearward compartmentation. Includes (1) 56" wide compartment over the wheel well.	$11,531
3120-0526	(2) officer side roof top compartments. Includes hinged raised compartment lids with turn latches and grab handle(s). The rear compartment to include (1) vertically hinged access door at the rear with push button latch for access to (1) 6" X10' hard suction tube. Each lid to have (1) bracket mounted LED light and to be wired to door ajar indicator in cab.	$2,586
3120-0527	2-arm ladder rack on officer side. Modified pivot position to allow the ladder rack to deploy at 48" to the center of ladders as loaded or less from ground level. The ladder rack includes amber lights on each end to visually indicate when the rack is in motion. Restricts the top folding step (if optioned) from closing completely. Includes mounting bracket (if required, matching rear compartment face or compartment wrap finish) for components mounted on rear compartment face.	$11,922
3120-0528	Officer full height side body with 20" wide and 42" wide forward compartments and 42" wide rearward compartment. Includes (1) 56" wide compartments over the wheel well. For use with custom chassis only.	$9,333
3120-0529	Officer side body with full height 42" wide forward and 56" wide rearward compartmentation. Includes (1) 56" wide compartment over the wheel well.	$12,093
3120-0530	Officer high side stainless steel tanker body with 52" front and 52" rear rescue style, R2 and R3 modified for one-arm Zico overhead ladder rack. Four compartments, tandem axle. Ladder rack not included, requires adding sales code 3365-0185-199.	$18,543

3120-0531	Officer side body with full height, full depth 60" wide front and 54" wide rear compartments. Includes (1) 44" wide compartment over the wheel well and one (1) Zico overhead ladder rack. SS eMAX only.	$23,012
3120-0532	Double hard suction storage rack: Two (2) hard suction hose storage racks shall be provided on the driver side of the body. The racks shall be positioned with one (1) rack located beside the other.	$993
3120-0533	Stainless steel officer side special tall body with full height 40" wide forward and 58" wide rearward enhanced extended compartmentation. Includes (1) 54" wide compartment over the wheel well.	$11,581
3120-0535	Officer side body with full height 60" wide forward and 62" wide rearward enhanced extended compartmentation. Includes (1) 33" wide compartment over the wheel well, one (1) storage tunnel and (1) Zico Overhead Ladder Rack.	$22,591
3120-0536	Officer side body with full height 50" wide forward and 36" wide rearward compartmentation. Includes (1) 56" wide compartment over the wheel well. Rear perimeter or body raised 4" for improved departure angle.	$10,736
3120-0538	Officer half side stainless steel body with 40" wide forward and 58" wide rearward enhanced extended compartmentation. Includes adjustable ladder tracks, and 60" wide rear fender.	$5,977
3120-0539	(2) officer side roof top compartments. Includes hinged raised compartment lids with slam style D-ring latches and no grab handles. Each lid to have (1) bracket mounted LED light and to be wired to door ajar indicator in cab.	$2,615
3120-0540	(2) officer side roof top compartments. Includes hinged raised compartment lids with turn latches and grab handle(s). Each lid to have (1) bracket mounted LED light and to be wired to door ajar indicator in cab. Includes fixed floor with hard suction storage below accessible through hinged rear panel access door with bent D-ring latch.	$3,284
3120-0541	Officer side body with full height 60" wide forward and 42" wide rearward compartmentation. Includes (1) 33" wide compartment over the wheel well and (1) Zico Overhead Ladder Rack.	$17,146
3120-0542	Officer side body with full height 42" wide forward and 42" wide rearward compartmentation. Includes (1) 56" wide compartment over the wheel well.	$10,545
3120-0543	Officer half side stainless steel body with 40" wide forward and 58" wide rearward extended compartmentation. Includes adjustable ladder tracks, and 60" wide rear fender.	$6,028
3120-0544	Officer half side body with 42" wide forward and 50" wide rearward enhanced extended compartmentation. Includes adjustable ladder tracks.	$5,706
3120-0545	Officer half side body with 24" wide forward and 50" wide rearward enhanced extended compartmentation.	$4,939
3120-0546	Officer side smooth plate roof top compartment and painted black Durabak. Includes vertically hinged smooth plate access door painted job color at the rear with push button latch to be wired to door ajar indicator in cab.	$1,816
3120-0547	(2) officer side roof top compartments with extra width to inboard side. Includes hinged raised compartment lids with turn latches, grab handle(s) and gas shock hold open and drain line(s) ran to below body. Each lid to have (1) Amdor strip LED light and to be wired to door ajar indicator in cab.	$5,697
3120-0548	Officer full height side body with (3) full height, rescue style, forward compartments (48" and 30" wide) and (1) rearward compartment (24" wide), plus (1) upper compartment over w/well(33" wide and offset rearward of the rack opening).	$8,880
3120-0550	Officer side tandem body with (1) 36" wide and (1) 20" wide forward and 54" wide rearward compartmentation. (1) forward compartment to be full height, (1) forward and rearward to be half height.	$9,048
3120-0552	Officer Full height forward compartment and 3/4 side rear of R1 tandem body with 42" wide forward and 42" wide rearward compartmentation. Includes (2) 51.5" wide compartments over the wheel well. Lowered W/Well for extra compt heigth. Side Dump Valves between Tandems N/A.	$13,139
3120-0553	(2) officer side roof top compartments. Includes hinged raised compartment lids with turn latches and grab handle(s). Each lid to have (3) bracket mounted EION LED lightS and to be wired to door ajar indicator in cab.	$2,496
3120-0554	Stainless steel officer half side body with 30" wide front and 40" wide rear and 60" wide fender panel.	$4,885
3120-0555	Officer side tandem body with upper and lower compartmentation. Includes 60" wide full height forward and 54" wide half height rearward compartments and (1) opening forward upper compartment with painted panels rearward.	$15,910
3120-0556	Officer side rear mount pumper body with full height 48" wide forward and 60" wide rearward compartmentation. Includes (1) 56" wide compartment over the wheel well and provisions to rear mount pump panel in rearward side compartment.	$11,831
3120-0557	Officer side body with full height 60" wide forward and 48" wide rearward compartmentation. Includes (1) 56" wide compartment over the wheel well.	$12,302
3120-0558	(2) officer side roof top compartments for instillation of DOT/ASME bottles. Includes hinged raised compartment lids with turn latches and grab handle(s). Each lid to have (1) bracket mounted LED light and to be wired to door ajar indicator in cab.	$2,496
3120-0559	Officer side body with full height 42" wide forward and 42" wide rearward compartmentation. Includes (1) 56" wide compartment over the wheel well and one (1) storage tunnel beside the water tank.	$12,877
3120-0560	Officer side body with full height 34" and 48" wide forward and 56" wide rearward compartmentation. Includes (1) 33" wide compartment over the wheel well and (1) Zico Overhead Ladder Rack.	$20,467

3120-0561	Officer side body with full height 30" wide forward and 44" wide rearward compartmentation. Includes (1) 56" wide compartment over the wheel well.	$10,221
3120-0562	Officer side body with full height 42" and 40" wide forward compartments and 56" wide rearward compartmentation. Includes (1) 56" wide compartment over the wheel well. Side Mount eMAX only.	$14,073
3120-0563	Zico hydraulic drop-down ladder rack (LAS-XT) with 12 inches additional drop. Includes spacer brackets with ladder rack controller located on the officer side pump panel.	$7,074
3120-0564	Stainless steel officer side body with full height/full depth 60" wide forward and 60" wide rearward compartmentation. Includes 60" wide compartment over the wheel well and a 2-arm hydraulic overhead ladder rack.	$13,803
3120-0566	Stainless steel officer side body with full height 48" wide forward and 40" wide rearward compartmentation. Includes (1) 60" wide compartment over the wheel well.	$11,199
3120-0568	Officer side rear mount rescue pumper body with full height 38" wide forward and 42" wide rearward compartmentation with officer side ladder storage tunnel. Includes (1) 56" wide compartment over the wheel well and 30 degree angled rear body for improved angle of departure.	$14,233
3120-0569	Stainless steel officer side body with full height, full depth 48" wide forward and 40" wide rearward compartmentation. Includes (1) 54" wide compartment over the wheel well.	$11,351
3120-0570	Officer full height body side with (1) 48" wide, Full Height forward compartment, (1) 30" wide, lower forward compartment adjacent to w/well, (2) upper compartments (57" wide each), the rearward upper having a rear compartment face access door for portable tank storage, and (1) lower rearward compartment (24") to rear of the w/well.	$10,644
3120-0571	Stainless steel officer side body with full height 54" wide forward and 48" wide rearward compartmentation. Includes (1) 60" wide compartment over the wheel well.	$12,259
3120-0572	Officer side body with full height 60" wide front and 54" wide rear compartments. Includes (1) 60" wide compartment over the wheel well and one (1) storage tunnel located behind reduced upper depth compartments. SS eMAX only.	$18,257
3120-0573	(2) side low profile stepped interior roof top compartments with extra width to inboard side. Includes hinged raised compartment lids with turn latches,gas shock hold opens and drain line(s) ran to below body. Each lid to have (1) bracket mounted LED light and to be wired to door ajar indicator in cab. Lids shall be without grab handles for lowered OAH and shall have a stepped interior.	$5,090
3120-0574	Officer half side body with 42" wide forward and 36" wide rearward compartmentation. Includes adjustable ladder tracks.	$4,907
3120-0575	Stainless steel officer side body with full height 40" wide forward and 58" wide rearward enhanced extended compartmentation. Includes (1) 60" wide compartment over the wheel well.	$13,024
3120-0576	Officer side rear mount rescue pumper body with full height 60" wide forward and 44" wide rearward compartmentation with officer side ladder storage tunnel. Includes (1) 56" wide compartment over the wheel well and 30 degree angled rear body for improved angle of departure.	$16,113
3120-0577	Officer side rear mount rescue pumper body with full height 60" wide forward and 44" wide rearward compartmentation. Includes (1) 56" wide compartment over the wheel well and 30 degree angled rear body for improved angle of departure.	$13,449
3120-0578	Officer side body with 3/4 height 36" wide forward and 56" wide rearward compartmentation. Includes (1) 56" wide x 20" high compartment over the wheel well.	$7,901
3120-0579	Officer side diamond plate roof top compartment. Includes smooth plate painted vertical hinged access door at the rear with D-Ring latch to be wired to door ajar indicator in cab.	$1,476
3120-0580	(1) officer side roof top compartment. This is to be used for long handle tool storage and to be accessible through hinged rear panel access door with trigger style latch. Includes (1) bracket mounted LED light and to be wired to door ajar indicator in cab. Includes fixed forward wall at 143".	$2,740
3120-0581	Stainless steel officer half side body with 40" wide forward, 40" wide rear and a 60" wide fender panel. Includes adjustable ladder tracks.	$5,247
3120-0582	Officer side body with full height, full depth 30/60" wide front and 54" wide rear compartments. Includes (1) 44" wide compartment over the wheel well, with Zico overhead ladder rack. SS eMAX only.	$24,862
3120-0583	(1) shallow officer side roof top compartment with extra width to inboard side, forward position. Includes hinged raised compartment lid with turn latch, grab handle(s) and gas shock hold open and drain line(s) ran to below body. (1) rear opening hard suction storage compartment with lift up vertically hinged door w/bent D-ring latch. Each compartment to have a (1) LED light and to be wired to door ajar indicator in cab. Compartments shorter to allow recessing of ladder rack.	$5,212
3120-0584	Officer half side body with 30" wide forward and 60" wide rearward extended compartmentation. Includes adjustable ladder tracks.	$6,005
3120-0585	Stainless steel officer half side body with 30" wide front and 40" wide rear and 60" wide fender panel. For use with suicide hinged R1 door.	$4,896
3120-0586	(2) officer side roof top compartments. Includes hinged raised compartment lids with turn latches and grab handle(s). Each lid to have (1) bracket mounted ROM V4 LED strip light and to be wired to door ajar indicator in cab.	$2,835
3120-0587	Officer side body with full height 68" wide forward and 56" wide rearward compartmentation. Includes (1) 56" wide compartment over the wheel well and one (1) storage tunnel located behind the upper (3) compartment back walls.	$15,488
3120-0588	Stainless steel officer side body with full height 60" wide forward and 60" wide rearward compartmentation with reduced upper depth. Includes (1) 60" wide compartment over the wheel well and (1) storage tunnel.	$17,069

3120-0589	Officer full height side body with (3) full height, rescue style, forward compartments (48" and 30" wide) and (1) rearward compartment (24" wide), (1) upper compartment (56" wide).	$8,880
3120-0590	Officer side rear mount rescue pumper body with full height 38" wide forward and 42" wide rearward compartmentation. Includes (1) 56" wide compartment over the wheel well and 30 degree angled rear body for improved angle of departure.	$11,569
3120-0591	(2) officer side roof top compartments with extra width to inboard side. Compartment top and lids to be smooth plate painted black Durabak. Includes hinged raised compartment lids with turn latches, grab handle(s) and gas shock hold open and drain line(s) ran to below body. Each lid to have (1) bracket mounted LED light and to be wired to door ajar indicator in cab.	$6,234
3120-0592	Stainless steel officer side body with full height 48" wide forward and 48" wide rearward compartmentation. Includes (1) 60" wide compartment over the wheel well, and a storage tunnel.	$15,161
3120-0593	Electric Lock for Zico Hydraulic Drop Down Ladder Rack.	$1,951
3120-0594	(2) officer side roof top compartments with extra width to inboard side. Includes hinged raised compartment lids with turn latches, grab handle(s) and gas shock hold open and drain line(s) ran to below body. Each lid to have (1) bracket mounted ROM V4 LED strip light and to be wired to door ajar indicator in cab.	$5,327
3120-0595	Officer side body with full height 30in. wide forward and 62in. wide rearward enhanced extended compartmentation. Includes (1) 56in. wide compartment over the wheel well and a cavity (using space from R1) between R1 and R2 for vertical exhaust to exit on outer compartment top just forward of wheel well.	$14,359
3120-0596	Officer half side tandem body with 60" wide forward and 48" wide rearward compartmentation.	$8,225
3120-0597	Officer side body with full height 60" wide forward and 56" wide rearward compartmentation. Includes (1) 56" wide compartment over the wheel well and one (1) storage tunnel located behind the upper (3) compartment back walls. Rear perimeter or body raised 3" for improved departure angle.	$14,966
3120-0598	Officer side body with full height 30" wide forward and 50" wide rearward enhanced extended compartmentation. Includes (1) 33" wide compartment over the wheel well and (1) Zico Overhead Ladder Rack.	$16,614
3120-0599	Officer full height side body with 20" wide and 42" wide forward compartments and 42" wide rearward compartment. Includes (1) 56" wide compartments over the wheel well. For use with 30" high lower compt height only.	$9,333
3120-0600	Officer half side body with 44" wide forward and 36" wide rearward compartmentation and 28" high opening. Includes adjustable ladder tracks.	$6,709
3125-0001	Mid-Engine module with 58" wide opening. Forward area of module to have double stacked double crosslays to hold up to 200' of 2.0" DJ (each).	$9,032
3125-0002	Mid engine side access doors (PR) painted job color. Painted surface does not include expanded metal inserts.	$1,355
3125-0003	Mid engine side access doors (PR) diamond plate.	$1,181
3125-0005	eMAX Forward body configuration - SM. Includes a lower double preconnect storage area, upper transverse storage area, rack in upper storage area for (2) backboards (vertical stored offset forward - sleeve each side of center pump access), center front pump access doors and removable center floor in upper area.	$2,380
3125-0007	eMAX crosswalk module. Includes raised floor, walkway storage compartments with push button latches, running boards, (1) dual lighted LED folding step each side and access handrails mounted on the eMAX front body extension.	$1,507
3125-0008	eMAX Forward body configuration - SM. Includes a lower double preconnect storage area, upper preconnect storage area, sleeve in upper storage area for (2) backboards (vertical stored offset forward - sleeve is removable for center pump access), center front pump access doors and removable center floor in upper area.	$2,380
3125-0009	eMAX Forward body configuration - TM. Includes a lower double preconnect storage area, provision for top mount pump operator's panel and center front pump access door.	$2,380
3125-0010	eMAX Forward body configuration. Includes a lower double preconnect storage area, upper transverse storage area with lift-up ptd door, rack in upper storage area for (2) backboards (vertically stored offset forward - sleeve each side of center pump access), center front pump access doors, removable center floor in upper area and upper storage pan.	$2,590
3125-0011	eMAX Forward body configuration - SM. Includes a lower transverse storage area for (2) backboards and (1) stokes basket with boxed out style access door (wired to door ajar). Center area to be sleeved for pump access with center front pump access door and removable center floor area.	$2,171
3125-0013	SS eMAX forward body configuration - SM. Includes a lower double preconnect storage area, upper preconnect storage area, sleeve in upper storage area for (2) backboards (vertically stored offset forward - sleeve is removable for center pump access), center front pump access doors and removable center floor in upper area.	$2,904
3125-0014	eMAX Forward body configuration. Includes a lower transverse storage area, rack in upper storage area for (2) backboards (vertically stored offset forward - sleeve each side of center pump access), upper transverse storage area, center front pump access doors, removable center floor in upper and lower areas and upper storage pan (pan to extend into forward body area and be wider to the rear).	$2,380
3125-0015	eMAX Forward body configuration. Includes a rack in lower storage area for (2) backboards (vertically stored offset forward - sleeve each side of center pump access), lower transverse storage area, upper transverse storage area, center front pump access doors, removable center floor in upper and lower areas and upper storage pan (pan to extend into forward body area and be wider to the rear).	$2,380

3125-0016	eMAX Forward body configuration - SM. Includes a lower double preconnect area, upper transverse storage area, rack in upper storage area for (1) 17' Little Giant ladder (vertically stored offset forward - sleeve each side of center pump access), center front pump access doors and removable center floor in upper area.	$2,623
3125-0017	eMAX Forward body configuration - SM. Includes a transverse storage area above pump panels that include (2) fixed shelves going full length (left to right) of the transverse compartment. The lower most shelf shall be approximately 11" from the floor. It shall accommodate a door on each side approximately 10" in height. The doors shall be mounted below the lower most shelf and shall be recessed approximately 3" from each side. The smooth aluminum doors shall be 3/16" thick, include a thumb latch and have a vertical hinge mounted to the rear side. The second shelf shall be mounted approximately 18" above the lower shelf. The lower area floor shall be constructed from 1/8" smooth aluminum plate and be bolted in to facilitate pump system servicing. The outboard floors of the upper area shall be constructed from 1/8" smooth aluminum plate. The center upper floor shall be 1/8" smooth aluminum plate and removable to provide easy access to the pump manifold and valves.	$2,623
3125-0018	eMAX Forward body configuration - SM. Includes a lower double preconnect storage area, extruded boxed out upper transverse storage area with horizontal hinged door each side with push button latch and pull strap, rack in upper storage area for (2) backboards (vertical stored offset forward - sleeve each side of center pump access) and (1) stokes basket (offset rearward) - 84.5" long x 24" high x 7.5" deep, center front pump access doors, removable center floor in upper area.	$2,695
3125-0019	SS eMAX forward body configuration - SM. Includes a lower double preconnect storage area, sleeve in upper storage area for backboards or other transverse items with lift-up access door each side (stored offset forward - sleeve is removable for center pump access), center front pump access doors and removable center floor in upper area.	$2,904
3125-0020	eMAX Forward body configuration - TME. Includes a lower double preconnect storage area, upper transverse storage area, rack in upper storage area for (2) backboards (vertically stored offset forward - sleeve each side of center pump access), center front pump access doors and removable center floor in upper area.	$2,380
3125-0021	An eMAX forward body configuration - SM. Includes a lower double preconnect storage area, upper transverse storage area, rack in upper storage area for (1) 13' Little Giant Ladder (vertically stored offset forward sleeve each side of center pump access) and (1) Ferno Model 71-S two piece stokes basket (vertically stored), center front pump access doors with D-Ring latch and removable center floor in upper area.	$2,793
3125-0022	eMAX Forward body configuration - SM. Includes a lower double preconnect storage area, upper transverse storage area with a lift up door (each side) to include pull strap, push button latch, wired to door ajar. Center front pump access doors and removable center floor in upper area.	$2,380
3125-0023	OBSOLETE. USE 3125-0018	$2,380
3125-0024	OBSOLETE. USE 3125-0032	$2,695
3125-0025	eMAX Forward body configuration - SM. Includes a lower double preconnect storage area, upper preconnect storage area, sleeve in upper storage area for (2) backboards (vertically stored offset forward - sleeve is removable for center pump access), center front pump access doors and removable center floor in upper area. Upper logo panel and storage door to be smooth plate for paint color or zolotone application.	$2,380
3125-0027	SS eMAX forward body configuration - SM. Includes a lower double preconnect storage area, upper preconnect storage area (rearward), open storage area for dealer supplied hydraulic system (offset forward) , center front pump access doors and removable center floor in upper area. Bolt on ventilated brushed stainless steel cover plates on both ends of forward open storage area.	$2,904
3125-0028	eMAX Forward body configuration - SM. Includes a lower double preconnect storage area, upper transverse storage area with D-Ring latch each door, rack in upper storage area for (2) backboards (vertically stored offset forward - sleeve each side of center pump access), center front pump access doors and removable center floor in upper area.	$2,530
3125-0029	eMAX Forward body configuration - SM. Includes a lower double preconnect storage area, upper preconnect storage area, and upper forward area for dry lay. Center front pump access doors and removable center floor in upper area.Pump module opening 23" wide for use with roll-up doors.	$2,872
3125-0030	Includes a lower double preconnect storage area, sleeve in upper storage area for long handle tools and/or other transverse items with lift-up access door each side- (sleeve is removable for center pump access), center front pump access doors and removable center floor in upper area. Upper area recessed at depth of front eMAX body storage pan.	$2,659
3125-0031	eMAX Forward body configuration for use with a (2) arm ladder rack. - SM. Includes a lower double preconnect storage area, upper transverse storage area and deck gun piping access, center front pump access doors and removable center floor in upper area.	$2,869
3125-0032	eMAX Forward body configuration - SM. Includes a lower double preconnect storage area, extruded boxed out upper preconnect/storage area with horizontal hinged door each side with push button latch and pull strap, rack in upper storage area for (1) stokes basket (offset forward) - 84.5" long x 24" high x 7.5" deep and (1) preconnect area (offset rearward), center front pump access doors, removable center floor in upper area.	$2,695
3125-0033	eMAX Forward body configuration for use with a (2) arm ladder rack and raised speedlays for 4X4 application. - SM. Includes a lower double preconnect storage area, upper transverse storage area and deck gun piping access, center front pump access doors and removable center floor in upper area.	$2,869

3125-0034	eMAX Forward full width body configuration - SM. Includes a lower double preconnect storage area, upper full usable body width transverse storage area, rack in upper storage area for (2) backboards (vertical stored offset forward and misc. storage rearward - sleeve each side of center pump access), center front pump access doors and removable center floor in upper area. e-MAX forward pump module to match body height.	$6,075
3125-0036	eMAX Forward body configuration - SM. Includes a lower double preconnect storage area, upper transverse storage area, an adjustable storage rack in upper storage area for (2) backboards (or similar items, vertically stored offset forward - sleeve each side of center pump access) with single preconnect storage rearward, center front pump access doors and removable center floor in upper area.	$2,489
3125-0037	SS eMAX forward body configuration - SM. Includes a lower double preconnect storage area, sleeve in upper storage area for (1) stokes basket or other transverse items with boxed out style lift-up access doors (wired to door ajar) each side (sleeve is removable for center pump access), center front pump access doors and removable center floor in upper area.	$3,106
3125-0038	eMAX Forward Full Body Width configuration - SM. Includes a transverse double preconnect storage area, one single lower, and one single upper, with a bolt-on partition to keep storage trays from sliding foroward. Both Trays shall accommodate a full height roll-up door on each side of body. Module also includes a center front pump access door, and a removable center floor in the upper area.	$6,075
3125-0039	eMAX Forward body configuration - SM. Includes an extruded boxed out lower double preconnect storage area, upper transverse storage area, sleeve in upper transverse storage area with provision for roll-up door each side, sleeve each side of center pump access) and (1) stokes basket (forward) - 86" long x 24.5" high x 8" deep, center front pump access doors, removable center floor in upper area.	$2,695
3125-0040	eMAX Forward body configuration - SM. Includes a lower double preconnect storage area, extruded boxed out upper preconnect/storage area with horizontal hinged door each side with push D-ring latch and pull strap, rack in upper storage area for (1) stokes basket (offset forward) - 84.5" long x 24" high x 7.5" deep and (1) preconnect area (offset rearward), center front pump access doors, removable center floor in upper area.	$2,695
3125-0041	eMAX Forward body configuration - SM. Includes a lower double preconnect storage area, upper transverse storage area, rack in upper storage area for (2) backboards (horizontally stored - sleeve each side of center pump access), center front pump access doors and removable center floor in upper area.	$2,639
3130-0003	Pump module. Includes 39" wide pump panel opening and running boards.	$4,790
3130-0004	Pump module. Includes 45" wide pump panel opening and running boards.	$4,790
3130-0005	Pump module. Includes 51" wide pump panel opening and running boards.	$4,790
3130-0006	Pump module. Includes 57" wide pump panel opening and running boards.	$4,790
3130-0007	Crosswalk module.Includes running boards, (1) folding step each side and access handrails mounted on the pump module.	$944
3130-0008	Crosswalk module. Includes walkway storage compartments with push button latches, running boards, (1) folding step each side and access handrails mounted on the pump module.	$1,377
3130-0009	Speedlay module. Includes area for (2) speedlays with trays, (1) area for dry storage, lower storage compartments with push button latches and running boards.	$1,652
3130-0010	Transverse Module (narrow). Locate forward of pump area. Includes a single compartment opening per side (with a shallow lower area and a transverse upper area with diamond plate flooring) and running boards.	$2,111
3130-0011	Transverse Module (full width). Locate forward of pump area. Includes a single compartment opening per side (with a shallow lower area and a transverse upper area with smooth plate flooring).	$2,921
3130-0012	Upper SM pump module with double stacked double crosslays and diamond plate storage pan.	$1,412
3130-0013	Upper SM pump module with single stacked double crosslays and diamond plate storage pan.	$1,412
3130-0014	Upper SM pump module with single stacked triple crosslays and diamond plate storage pan.	$1,771
3130-0015	Upper SM pump module with single stacked double crosslay, backboard storage and diamond plate storage pan.	$2,406
3130-0016	Upper TM pump module with double stacked double crosslays.	$1,575
3130-0017	Upper TM pump module with single stacked double crosslays.	$1,575
3130-0018	Upper TM pump module with single stacked double crosslays and backboard storage.	$2,534
3130-0020	Upper TM pump module with diamond plate storage pan.	$1,652
3130-0021	Upper TM pump module with backboard storage and diamond plate storage pan.	$2,022
3130-0022	Speedlay module. Includes area for (2) speedlays with trays, (1) area for backboard storage with hinged doors with latches, lower storage compartments with push button latches and running boards.	$2,610
3130-0023	Speedlay module. Includes area for (3) speedlays with trays, lower storage compartments with push button latches and running boards.	$2,011
3130-0024	Upper SM pump module with diamond plate storage pan (only).	$1,533
3130-0030	Stainless steel pump module. Includes 39" wide pump panel opening and running boards.	$5,991
3130-0031	Stainless steel pump module. Includes 45" wide pump panel opening and running boards.	$5,991
3130-0032	Stainless steel pump module. Includes 51" wide pump panel opening and running boards.	$5,991
3130-0033	Stainless steel pump module. Includes 57" wide pump panel opening and running boards.	$5,991
3130-0036	Stainless steel Speedlay module. Includes area for (2) speedlays with trays, (1) area for dry storage, lower storage compartments with push button latches and running boards.	$2,063
3130-0039	Upper SM pump module with double stacked crosslays and diamond plate storage pan.	$1,764
3130-0051	Stainless Steel Upper SM pump module with diamond plate storage pan (only).	$1,912

3130-0055	Stainless steel speedlay module. Includes area for (3) speedlays with trays, lower storage compartments with push button latches and running boards.	$2,511
3130-0062	Upper SM pump module with quad single stacked crosslays and diamond plate storage pan.	$2,130
3130-0063	Upper SM pump module with quad single stacked crosslays and diamond plate storage pan. The rear crosslay is for dry hose storage.	$2,130
3130-0064	Upper stainless steel SM pump module with quad single stacked crosslays and diamond plate storage pan.	$2,662
3130-0065	Upper stainless steel SM pump module with quad single stacked crosslays and diamond plate storage pan. The rear crosslay is for dry hose storage.	$2,662
3130-0067	Upper TM pump module with single stacked triple crosslays. Includes (2) dividers.	$1,751
3130-0068	Upper TM pump module with single stacked triple crosslays and backboard storage.	$3,029
3130-0069	Upper SM pump module with double stacked triple dry crosslays. Crosslay floor to be hinged and accessed from driver side. Include gas shocks, hold open rod, adj tracks and (2) dividers w/handhold cut-outs on both ends.	$4,419
3130-0070	Pump module. Includes lowered area for lowered upper module and 45" wide pump panel opening and running boards.	$5,991
3130-0071	Upper SM pump module with single stacked triple crosslay, backboard storage and diamond plate storage pan.	$2,765
3130-0072	Upper SM pump module with single stacked triple crosslays and diamond plate storage pan. Upper module to be full width as applicable to match lower module.	$2,654
3130-0083	Speedlay module. Includes area for triple speedlays with divider(s) and lower storage compartments with push button latches and running boards.	$2,011
3130-0084	Speedlay module to have (2) dividers for a triple speedlay configuration. Each divider to be notched for preconnect nozzles. Preconnect plumbing to be internal to the speedlay.	$367
3130-0085	Upper TM pump module with single stacked 2.5" crosslay and 2.5" double single stacked dry crosslay.	$2,534
3130-0086	Driver side SM module extension for vertical exhaust. Includes forward extended running board.	$265
3130-0087	Upper SM pump module with double crosslay with double stack set-up in single stack depth. Includes backboard storage with raised push button latches and diamond plate storage pan (open back style). Crosslay divider to be adjustable side to side with slat style flooring.	$2,765
3130-0088	Speedlay module to have (1) divider for a double configuration. The divider is to be held short for preconnect nozzle. Preconnect plumbing to be internal to the speedlay. Rearward area to be for backboard storage and includes vertically hinged doors with push-button latching.	$687
3130-0089	Upper SM pump module with (5) single stacked crosslays- (4) 1.5" AND (1) 2.5" rearward. Includes open back style pan for generator.	$2,451
3130-0090	Pump module. Includes 63" wide pump panel opening and running boards.	$4,790
3130-0093	Upper SM pump module with double stacked triple crosslays and diamond plate storage pan.	$1,930
3130-0095	Crosswalk module. Includes walkway storage compartments with push button latches, running boards, (1) diamond plate gator grip step each side and access handrails mounted on the pump module.	$1,590
3130-0096	Speedlay module(stacked). Includes area for (2) stacked speedlays and (1) upper speedlay (crosslay style), lower storage compartments with push button latches and running boards. Lower speedlay, upper speedlay and crosslay.	$2,242
3130-0098	Speedlay module full width. Includes area for (4) speedlays, (2) speedlays (stacked) per side with partition in center of module. Includes lower storage compartments with push button latches.	$3,650
3130-0099	Pump module. Includes 45" wide pump panel opening and running boards. Interior of module to have 70" width.	$4,790
3130-0100	Upper SM pump module with triple single stacked crosslays and diamond plate storage pan. Module is for use with a wider lower module base. To include a non-stepped pan with 1.5" extrusion rearward and narrow crosslay widths.	$1,771
3130-0101	Upper SM pump module with single stacked double crosslay, backboard storage and diamond plate storage pan. Interior to be 70" wide to match lower module.	$2,406
3130-0102	Speedlay module(stacked). Includes area for (2) speedlays, lower storage compartments with push button latches and running boards.	$2,011
3130-0103	Speedlay module. Includes area for (2) speedlays with center divider, lower storage compartments with push button latches and running boards.	$1,652
3130-0104	Top mount enclosed pump module. Includes full width single crosslay, backboard storage and storage pan with push button latches and enclosed side pump panels with AM Roll-Up Doors.	$13,517
3130-0106	Upper pump module. Includes double, double stacked crosslay area (rearward of module). Forward area to have storage for tools and backboards (horizontally stored). To include diamond plate hinged doors on sides (vertically hinged). The upper are is to have a diamond plate top.	$4,648
3130-0107	Speedlay module. Includes area for (2) speedlays with dividers, (1) area for backboard storage with hinged doors with latches, lower storage compartments with push button latches and running boards.	$2,610
3130-0108	Upper TM pump module with double stacked triple crosslays (single stack depth).	$2,534
3130-0109	Upper TM pump module with single stacked single crosslay, backboard storage and diamond plate storage pan. 2.5" crosslay to be rearward of the backboard storage.	$2,534
3130-0111	Upper SM pump module with single stacked triple crosslay, backboard storage and diamond plate storage pan.	$3,457
3130-0112	Pump Module. Includes 61" wide pump panel opening and running boards. Required with CAFS system. Interior of module to have 70" width.	$4,790

3130-0113	TM Pump Module. Includes triple crosslay area (crosslays to be 4.25"-divider-4.25"-divider-4.25" dry lay with stops provided, bottom of crosslay to be max of 60.5" from ground level with air suspension lowered. In reference to stops provided. Preconnect 1 will be enclosed on driver's side and preconnect 2 will be enclosed on officer's side). Walkway on this module is wider front to rear than standard and the walkway is incorporated into the main module. Driver and Officer runningboard hose trays to be angled and "floating" style..	$8,264
3130-0114	Pump module. Includes 51" wide pump panel opening and running boards. Interior of module to have 70" width.	$4,873
3130-0115	Upper SM pump module with single stacked double crosslays and diamond plate storage pan. Interior of module to have 70" width.	$1,412
3130-0116	Pump module. Includes 39" wide pump panel opening and running boards. Interior of module to have 70" width.	$4,873
3130-0119	Upper TM pump module with diamond plate storage pan. Interior to be 70" wide to match lower module.	$1,652
3130-0120	Crosswalk module.Includes running boards, (1) folding step each side and access handrails mounted on the pump module. Interior to be 70" to match lower module.	$944
3130-0121	Crosswalk module.Includes walkway storage compartments with push button latches, running boards, (1) folding step each side and access handrails mounted on the pump module.Interior to be 70" wide to match lower module.	$1,377
3130-0125	Upper SM pump module with triple single stacked crosslays and diamond plate storage pan. Interior to be 70" wide to match lower module.	$1,771
3130-0127	Upper TM pump module with single stacked double crosslays. Interior to be 70' wide to match lower module.	$1,575
3130-0155	Upper TM pump module with single stacked triple crosslays. Includes (2) dividers. Interior to be 70" to match lower module.	$1,751
3130-0164	Upper SM pump module with double stacked triple crosslays (single stacked depth) and diamond plate storage pan.	$4,097
3130-0165	Upper SM pump module with (5) single stacked crosslays. (4) single stacked 1.5" crosslays, (1) single stacked 2.5" crosslay rearward and diamond plate storage pan.	$2,451
3130-0168	Upper SM pump module with triple single stacked crosslays and wide dry crosslay storage area. The area rearward of crosslays is for deck gun channel.	$7,205
3130-0169	Transverse module to hold: Lower section (1) Stokes basket and (2) backboards. Upper section to hold miscellaneous long handled tools.	$584
3130-0170	Upper SM pump module with double stacked (dry) crosslays and diamond plate storage pan.	$1,412
3130-0171	Transverse Module (narrow). Locate forward of pump area. Includes a single compartment opening per side (with a shallow lower area and a transverse upper area with diamond plate flooring) and running boards. Upper area for triple stacked double crosslay. Transverse floor to be over framerails only, do not extend over tool compartments.	$3,813
3130-0172	Upper SM pump module with triple stacked double crosslays and diamond plate storage pan.	$2,534
3130-0173	Stainless steel speedlay module. Includes area for (2) speedlays with center divider, lower storage compartments with push button latches and running boards.	$2,064
3130-0174	Pump module for top mount enclosed operation. Includes 57" panel opening and area for double stacked double crosslay with storage pan. Module has sanded finish and crosslay floors are slotted for draining.	$9,515
3130-0175	Raised crosswalk module. Includes walkway storage compartments with push button latches, running boards, (1) diamond plate walkway step w/gator grip each side and access handrails mounted on the pump module. Includes 8" raise with 5" high storage compartment with drop down diamond plate doors with push button latches.	$2,664
3130-0176	Upper TM pump module with double stacked double crosslays with backboard storage.	$3,319
3130-0177	Upper SM pump module with backboard storage and diamond plate storage pan. Backboard storage to be located rearward of storage pan. Deck gun channel to be located between pan and back board compartment.	$2,315
3130-0179	Speedlay module(stacked). Includes area for (2) stacked speedlays and (1) upper storage compartment, lower storage compartments with push button latches and running boards. Lower 1.75 speedlay and upper 2.5 speedlay. Single diamond plate cover for upper storage area. Includes (1) grab handle and (2) hold downs.	$3,483
3130-0180	Transverse Module (narrow). Locate forward of pump area. Includes a single compartment opening per side (with a shallow lower area and a transverse upper area with diamond plate flooring) and running boards. Upper area for single stacked triple crosslay.	$3,813
3130-0181	Pump/Speedlay Module. Includes area for runningboards, upper side stainless steel panels, (2) removable speedlay trays and upper dunage storage pan.	$11,051
3130-0182	Upper SM pump module with triple crosslays (single stacked depth) and diamond plate storage pan. Forward crosslays to be double stacked and rearward crosslay to be single stacked dry lay.	$4,455
3130-0183	Upper SM pump module with double stacked triple crosslays and diamond plate storage pan. Upper module to be full width as applicable to match lower module.	$4,256
3130-0184	Pump module top mount with speedlays. Includes 41" wide pump panel opening, dunnage pan and running boards. Raised top mount walkway includes storage compartments with D-Ring latches, (1) 5" diamond plate top mount walkway step with gator grip each side and access handrails mounted on the pump module. Raised walkway for backboard storage includes diamond plate door with push button latches. Includes area for (2) speedlays with 1.5" plumbing. Driver and Officer side upper pump access panels to be horizontally hinged with diamond plate doors. Includes (2) D-Ring latches and (2) gas shock hold opens for each.	$9,456
3130-0186	Upper TM pump module with double stacked single 2.5" crosslay. Includes area for dry crosslay storage rearward of 2.5".	$2,534

3130-0187	Upper SM pump module with triple single stacked crosslays and diamond plate storage pan. Each crosslay to be 6" wide for nozzle storage.	$1,998
3130-0188	Upper TM pump module with single stacked quad crosslays. Includes (3) dividers.	$1,929
3130-0189	Upper SM pump module with backboard storage and diamond plate storage pan. Backboard storage to be located forward of storage pan.	$2,315
3130-0190	Top Mount Pump Module. Includes area for single stacked double crosslay (notched divider) and TM walkway with folding steps with intergral lights and (2) vertical handrails.	$1,899
3130-0191	Top Mount Pump Module. Includes area for single stacked triple crosslay (notched dividers) and TM walkway with folding steps with integral lights and (2) vertical handrails.	$2,304
3130-0193	Side Mount Pump Module. Includes area for single stacked triple crosslay (notched dividers).	$410
3130-0194	Top Mount Pump Module. Includes area for a double speedlay and TM walkway with folding steps with integral lights and (2) vertical handrails.	$3,003
3130-0195	Top Mount Pump Module. Includes area for a double speedlay, single crosslay and TM walkway with folding steps with integral lights and (2) vertical handrails.	$3,408
3130-0196	Upper SM pump module with single stacked double crosslay, backboard storage and diamond plate storage pan. Backboard storage opening to be 6.5" wide.	$4,152
3130-0197	Upper SM pump module with double stacked double crosslay for 400' of 1.75" hose in each crosslay, backboard storage and diamond plate storage pan.	$4,732
3130-0198	Upper TM pump module with single stacked double crosslays. Each crosslay to hold 100' of 3" DJ.	$3,901
3130-0199	Upper SM pump module with single stacked triple crosslays and diamond plate storage pan. (2) Backboard and Ferno model 6 or EXL scoop stretcher storage box located below the storage pan with lift-up diamond plate door with thumb latches each side. Upper module to be full width as applicable to match lower module.	$5,250
3130-0200	Transverse Module (narrow). Locate forward of pump area. Includes a single compartment opening per side (with a shallow lower area and a transverse upper area with diamond plate flooring) and running boards. Upper area for single stacked quad crosslay. Plumbing to terminate thru outboard extrusion as follows: #1 driver side, #2 officer side, #3 driver side and #4 officer side.	$5,601
3130-0201	Upper SM pump module with 2.5" double stacked double crosslay and diamond plate storage pan. Both preconnects to be offset to officer side of module.	$4,900
3130-0202	Speedlay module(stacked). Includes area for (3) speedlays, lower storage compartments with push button latches and running boards.	$2,242
3130-0203	Transverse Module (narrow). Locate forward of pump area. Includes a single compartment opening per side (with a shallow lower area and a transverse upper area with diamond plate flooring) and upper area for triple stacked double crosslay with backboard storage.	$4,515
3130-0204	Pump module for top mount enclosed operation. Includes 47" panel opening, area for double stacked single crosslay, area for double stacked double speedlay with trays stacked side by side, lower storage compartments with D-ring latches and running boards. Crosslay floor to be slotted for draining. Includes backboard storage forward of crosslay. Includes deck gun channel and open back storage pan rearward of crosslay.	$12,325
3130-0205	Upper TM pump module with backboard storage and diamond plate storage pan. Backboard storage located rearward of storage pan.	$2,022
3130-0206	Upper SM pump module with 2.5" double stacked double crosslays and diamond plate storage pan.	$4,374
3130-0207	Transverse Module (narrow). Locate forward of pump area. Includes a single compartment opening per side (with a shallow lower area and a transverse upper area with diamond plate flooring) and running boards. Upper area for double stacked double crosslay.	$4,394
3130-0208	Pump/Speedlay Module. Includes area for E-ONE supplied runningboards, (2) removable speedlay trays and upper diamond plate panels/doors for access to (2) horizontally stored backboards.	$11,476
3130-0209	Crosswalk module. Includes walkway storage compartments with D-ring latches, running boards, (1) folding step each side and access handrails mounted on the pump module.	$1,658
3130-0210	Speedlay module. Includes area for (2) speedlays with trays, (1) area for backboard storage with hinged doors with latches, lower storage compartments with D-ring latches and running boards. Speedlays to hold 250' of 1.75" DJ hose.	$3,288
3130-0211	Upper SM pump module with quad single stacked crosslays and diamond plate storage pan. Preconnects to located as follows: Preconnects 1 and 3 to be offset to officer side, Preconnects 2 and 4 to be offset to driver side. Crosslays to be 66" high from ground. Includes diamond plate access door on officer side of module with push button latches.	$3,874
3130-0212	Pump module. Includes 57" wide pump panel opening and running boards. Crosslays to be 66" high from ground.	$5,954
3130-0213	Speedlay module to be mounted with backboard storage located forward.	$286
3130-0214	Upper SM pump module with single stacked single crosslay and diamond plate storage pan.	$4,089
3130-0215	Transverse Module (full width). Locate forward of pump area. Includes a single compartment opening per side (with a shallow lower area and a transverse upper area with diamond plate flooring). Upper area for double stacked double crosslay.	$3,796
3130-0216	Upper SM pump module with double stacked triple crosslays and diamond plate storage pan.	$6,421
3130-0217	Speedlay module(stacked). Includes area for (3) 1.75" speedlays, lower storage compartments with push button latches and running boards. Upper speedlay to be dry lay.	$2,242
3130-0218	Upper TM pump module with 2.5" triple stacked single crosslay.	$4,078
3130-0219	Enclosed Pump Module with Triple Speedlays. Includes 45" wide pump panel opening. Includes area for (3) speedlays with trays, lower storage compartments with push button latches forward of pump panel opening. Upper module area to have storage pan.	$17,043

3130-0220	TM Upper module. Includes wide pan and open back style for special reel requirement.	$3,976
3130-0221	TM Pump Module. Includes triple crosslay area (crosslays to be 4.25"-divider-4.25"-divider-4.25") Rearward crosslay to be for a dry lay. Bottom of crosslay to be max of 60.5" from ground level with air suspension lowered. Walkway on this module is wider front to rear than standard and the walkway is incorporated into the main module. Driver and Officer runningboard hose trays to be angled and "floating" style. Special top mount diamond plate walkway access steps. Each step to be positioned where top stepping surface is centered between top of runningboard and top of walkway.	$8,428
3130-0222	Upper TM pump module with single stacked double crosslays. Rearward crosslay to hold 2.5" DJ hose.	$2,097
3130-0224	Upper TM pump module with single stacked triple crosslays, dunnage storage pan and backboard storage. Storage pan located between T/M panel and backboard storage.	$3,758
3130-0225	Pump module. Includes 45" wide pump panel opening and running boards. Includes area forward of pump panel opening for (2) speedlays (stacked), lower storage compartments with push button latches.	$8,133
3130-0226	Upper SM pump module with double stacked double crosslay (single stack depth) and diamond plate storage pan. Built in compartment on officer side of module rearward of crosslays. Compartment dimensions to be approx. 18.5"W x 20"H x 20"D, includes stainless steel door with push button latches. Storage pan to be stepped around compartment. Crosslay divider to be adjustable side to side.	$4,028
3130-0227	Pump module. Includes lowered area for lowered upper module and 51" wide pump panel opening and running boards.	$5,991
3130-0228	Upper SM pump module with single stacked double crosslay, backboard storage and diamond plate storage pan. 2.5" plumbing for rear crosslay.	$2,971
3130-0229	Speedlay module. Includes area for triple speedlays with divider(s) and lower storage compartments with push button latches and running boards.	$3,116
3130-0230	One piece side mount pump module with (2) 4.25" and (1) 5.5" single stacked triple crosslays and diamond plate storage pan. Includes 76" wide (side to side) module with a 45.5" wide pump panel opening and running boards.	$6,559
3130-0231	Speedlay module. Includes area for triple speedlays with divider(s) and lower storage compartments with D-ring latches and running boards.	$2,219
3130-0232	Speedlay module(stacked). Includes area for (3) speedlays, lower storage compartments with push button latches and running boards.	$2,734
3130-0233	Speedlay module. Includes area for triple speedlays with divider(s) and lower storage compartments with push button latches and running boards. Forward speedlay to have 2.5" plumbing.	$2,272
3130-0234	Pump module. Includes 45.5" wide pump panel opening and running boards. Lowered to 45.5" high to allow approx 69" high crosslay height from ground.	$5,920
3130-0235	TM Pump Module. Includes triple crosslay area (crosslays to be 4.25"-divider-4.25"-divider-4.25") and backboard storage forward of crosslays. Bottom of crosslays to be approx. 67" from ground level with air suspension full. Walkway on this module is wider front to rear than standard and the walkway is incorporated into the main module. Driver and Officer runningboards to have hose storage trays. Special top mount diamond plate walkway access steps. Each step to be positioned where top stepping surface is centered between top of runningboard and top of walkway.	$8,428
3130-0236	Upper SM pump module with double stacked double crosslays and diamond plate storage pan. Storage pan to be open back style.	$4,558
3130-0237	Upper TM pump module with 2.5" double stacked single crosslay.	$1,575
3130-0238	Speedlay module. 48"H IPO 54.5"H so as not to block rear windows. Includes area for (2) speedlays with center divider, lower storage compartments with push button latches and running boards.	$3,139
3130-0239	Upper TM pump module with single stacked double crosslays and diamond plate storage pan.	$2,305
3130-0240	Pump module. Includes 51" wide pump panel opening and running boards. Includes modifications for 4x4 and plumbing applications as required.	$5,990
3130-0241	Upper SM pump module with single stacked triple crosslay, backboard storage and diamond plate storage pan. Includes 8"W x 8"H storage rearward of the backboard storage and below the storage pan.	$4,864
3130-0242	Speedlay module(stacked). Includes area for (2) stacked speedlays and (1) upper speedlay (crosslay style), lower storage compartments with push button latches and running boards. Lower speedlay, upper speedlay and crosslay. For use with removable or slide-master tray(s).	$2,796
3130-0243	Transverse Module (narrow). Locate forward of pump area. Includes a single compartment opening per side (with a shallow lower area and a transverse upper area with diamond plate flooring) and running boards. Upper area for triple stacked double crosslay. Includes backboard storage in transverse upper for (5) backboards, each backboard slot be approx. 3" wide.	$5,386
3130-0244	Upper SM pump module with single stacked double crosslays and diamond plate storage pan. Crosslays to be 28" deep.	$1,936
3130-0245	Speedlay module (stacked). Includes area for (2) stacked speedlays with removable trays (each to hold 250' of 2.5" DJ triple stacked), lower storage compartments with push button latches, running boards and upper area dunnage pan.	$7,411
3130-0246	Upper SM pump module with single stacked triple crosslay, backboard storage and diamond plate storage pan. Forward (2) crosslay to be 6" wide and the rearward crosslay to be 6.75" wide.	$4,339
3130-0247	Upper SM pump module with triple crosslays and diamond plate storage pan. Forward (2) crosslays to be single stack and rearward crosslay to be double stack.	$3,969
3130-0248	Pump module - one piece. Includes 45.5" wide pump panel opening and running boards.	$4,790

3130-0249	Single stacked triple crosslays and diamond plate storage pan. Crosslays 5.5" wide each to hold 200'-1.75"DJ or 150-200'-2.5"DJ.	$1,771
3130-0250	Pump module. Includes 45" wide pump panel opening. Running boards to be smooth plate with gator grip and painted black duraback.	$5,417
3130-0251	Speedlay/crosslay module (stacked). Includes area for (2) speedlays with removable trays (each to hold 200' of 1.75" DJ), upper crosslay for storage of 200' of 2.5" DJ, lower storage compartments with push button latches and running boards.	$7,411
3130-0252	Upper SM pump module with double stacked single crosslay and diamond plate storage pan. Crosslay to be dry lay.	$2,985
3130-0254	Pump module. Includes 75" wide pump panel opening and running boards.	$4,790
3130-0255	Pump/Speedlay Module. Includes area for E-ONE supplied runningboards, (2) removable speedlay trays and upper diamond plate panels/doors for access to (2) horizontally stored backboards.	$5,564
3130-0257	Crosslay plumbing to be run thru a channel on each side of forward upper corner of the lower module. Preconnects to located as follows: Preconnects 1 and 3 to be offset to officer side, Preconnect 2 to be offset to driver side. The plumbing channel to be the width of the crosslay opening. The plumbing channels may require the pump panel and/or pump access door(s) to be modified for clearance.	$1,166
3130-0258	Pump/Speedlay Module. Includes main module lower stainless steel side panels (officer side main panel to be vertically main hinged), diamond plate runningboards, (2) removable speedlay trays with side hand-holds. Upper module to have dunnage storage area.	$8,413
3130-0259	Pump module. Includes 51" wide pump panel opening and running boards. Lowered to allow 70" high crosslay height from ground.	$5,839
3130-0262	Pump module. Includes 45" wide pump panel opening and running boards. Includes modifications for 4x4 and plumbing applications as required.	$5,990
3130-0264	Upper SM pump module with single stacked triple crosslays and diamond plate storage pan. Storage pan to be open back style.	$1,771
3130-0265	Transverse Module (narrow). Locate forward of pump area. Includes a single compartment opening per side (with a shallow lower area and a transverse upper area with diamond plate flooring) and running boards. Upper area for triple crosslay, forward (2) crosslays to be single stacked and rearward crosslay to be double stacked.	$4,630
3130-0266	Transverse Module (narrow). Locate forward of pump area. Includes a single compartment opening per side (with a shallow lower area and a transverse upper area with diamond plate flooring) and running boards. Upper area for double stacked double crosslay.	$4,394
3130-0267	Pump/Speedlay Module. Includes double stacked single crosslay located above the (2) speedlays in the lower area. Includes area for E-ONE supplied runningboards and (2) removable speedlay trays.	$9,893
3130-0271	Upper SM pump module with triple crosslays and diamond plate storage pan. Forward (2) crosslays to be single stack and rearward crosslay to be double stack. Crosslay plumbing to be located centered in place of outboard.	$3,969
3130-0273	Pump module. Includes 51" wide pump panel opening and running boards. Crosslays to be 73" high from ground.	$6,888
3130-0274	Upper SM pump module with double stacked (single stack depth) double crosslays and diamond plate storage pan. Front headboard stepped down 5" to allow 18" deep crosslays.	$2,820
3130-0275	Upper SM pump module with single stacked double crosslay, backboard storage and diamond plate storage pan. Storage pan to be open back style due to Honda Generator. Storage pan to be 15.75" deep with 3" extrustions to step up generator for air flow.	$3,456
3130-0276	Speedlay module. Includes area for triple speedlays with divider(s) and lower storage compartments with push button latches and running boards. Speedlay module tool compartments to be 20" high.	$2,797
3130-0277	Speedlay module. Includes area for (2) speedlays with trays, lower storage compartments with push button latches and running boards.	$1,861
3130-0278	Pump module. Includes 45" wide pump panel opening and running boards. Includes area forward of pump panel opening for (2) speedlays (stacked), lower storage compartments with push button latches	$7,085
3130-0279	Upper TM pump module with double stacked single crosslay and backboard storage. Crosslay to be rearward of the backboard storage. Crosslay to hold 3" DJ hose.	$4,159
3130-0280	Upper SM pump module with single stacked triple crosslay, backboard storage and diamond plate storage pan. Rearward crosslay to be double stacked for extra capacity.	$4,339
3130-0281	Stainless steel 46" wide lower pump module. Includes side running boards with Gator Grip.	$4,790
3130-0282	Stainless steel 46" wide lower pump module. Includes side running boards with Bustin Tread inserts.	$4,790
3130-0283	Stainless steel 50" wide lower pump module. Includes side running boards with Gator Grip.	$4,790
3130-0284	Stainless steel 50" wide lower pump module. Includes side running boards with Bustin Tread inserts.	$4,790
3130-0285	Stainless steel 54" wide lower pump module. Includes side running boards with Gator Grip.	$4,790
3130-0286	Stainless steel 54" wide lower pump module. Includes side running boards with Bustin Tread.	$4,790
3130-0287	Stainless steel 60" wide lower pump module. Includes side running boards with Gator Grip. This size required for most CAFS units.	$4,790
3130-0288	Stainless steel 60" wide lower pump module. Includes side running boards with Bustin Tread. This size required for most CAFS units.	$4,790
3130-0289	Upper SM stainless steel pump module with single stacked double crosslays and top open storage with treadplate flooring.	$1,412

3130-0290	Upper SM stainless steel pump module with double stacked double crosslays and top open storage with treadplate flooring.	$1,412
3130-0291	Upper SM stainless steel pump module with single stacked triple crosslays and top open storage with treadplate flooring.	$1,771
3130-0292	Upper SM stainless steel pump module with double stacked triple crosslays and top open storage with treadplate flooring.	$1,771
3130-0293	Upper SM stainless steel pump module with single stacked double crosslays and a backboard with top open storage with treadplate flooring.	$2,406
3130-0294	Upper SM stainless steel pump module with double stacked double crosslays and a backboard plus top open storage with treadplate flooring.	$2,406
3130-0295	Upper SM stainless steel pump module with single stacked triple crosslays and a backboard with top open storage with treadplate flooring.	$2,765
3130-0296	Upper SM stainless steel pump module with double stacked triple crosslays and a backboard with top open storage with treadplate flooring.	$2,765
3130-0297	Upper SM stainless steel pump module without crosslays. Top open storage only with treadplate flooring. For use with crosslays mounted on top of a front of pump transverse storage module, or with preconnects in the main hose bed, or as otherwise specified.	$1,533
3130-0298	Upper TM stainless steel pump module with single stacked double crosslays and top open storage with treadplate flooring.	$1,575
3130-0299	Upper TM stainless steel pump module with single stacked double crosslays and a backboard with top open storage (if space available) with treadplate flooring.	$2,534
3130-0300	Upper TM stainless steel pump module without crosslays. Top open storage only with treadplate flooring. For use with various preconnected discharge options.	$1,652
3130-0301	Speedlay module. Includes area for (2) speedlays, (1) area for backboard storage with hinged doors with latches, stainless steel lower storage compartments with push-button latches and running boards.	$2,610
3130-0302	Speedlay module. Includes area for (3) speedlays, stainless steel lower storage compartments with push-button latches and running boards.	$2,011
3130-0303	Speedlay module. Includes area for (2) 1-3/4" speedlays with a sliding tray and center divider, stainless steel lower storage compartments with push-button latches and running boards.	$1,652
3130-0304	Speedlay module. Includes area for (2) speedlays with dividers, (1) area for backboard storage with hinged doors with latches, stainless steel lower storage compartments with push button latches and running boards.	$2,610
3130-0305	Speedlay module. Includes area for triple speedlays with dividers and stainless steel lower storage compartments with push-button latches and running boards.	$2,011
3130-0306	Transverse Module (narrow). Located forward of pump area. Includes a single stainless steel compartment opening per side (with a shallow lower area and a transverse upper area with SS flooring) and running boards with Gator Grip.	$2,111
3130-0307	Transverse module (20" wide) with brushed stainless steel doors. Located forward of pump area and welded integral. Includes a single stainless steel compartment opening per side (with a shallow lower area and a transverse upper area) and side running boards with Bustin Tread.	$2,111
3130-0308	Crosswalk module. Includes stainless steel walkway storage compartments with lift-up access lids and butterfly latches, non-skid running boards with Bustin Tread, and access hand rails mounted one each side to the front of the pump enclosure assembly.	$1,377
3130-0309	Speedlay module (stacked). Module to be full width. Includes area for (2) stacked speedlays and (1) upper speedlay (crosslay style), lower storage compartments with push button latches and running boards. Lower speedlay, upper speedlay and crosslay. For use with removable or slide-master tray(s).	$4,054
3130-0310	Upper SM pump module with diamond plate storage pan (only). Upper module to be full width as applicable to match lower module.	$2,792
3130-0311	Speedlay module(stacked). Includes area for (2) stacked speedlays, lower storage compartments with push button latches and running boards. For use with removable or slide-master tray(s).	$2,219
3130-0312	Upper SM pump module with double stacked double crosslay and diamond plate storage pan. Area rearward of crosslays to be raised 12" due to ladder tunnel above the tank.	$4,339
3130-0313	Pump module. Includes 51" wide pump panel opening and running boards. Crosslays to be 66" high from ground.	$5,954
3130-0314	Pump module. Includes 39" wide pump panel opening and running boards. Includes area forward of pump panel opening for (2) speedlays (stacked), lower storage compartments with push button latches.	$8,133
3130-0315	Pump module. Includes 57" wide pump panel opening and running boards. Includes modifications for 4x4 and plumbing applications as required.	$5,990
3130-0318	Upper SM pump module with double stacked (single stacked depth) double crosslays and diamond plate storage pan.	$1,771
3130-0319	Upper SM pump module with triple crosslays (single stacked depth) and diamond plate storage pan. Forward crosslays to be double stacked and rearward crosslay to be single stacked dry lay.	$2,389
3130-0320	Pump module. Includes 45" wide pump panel opening and running boards. Lowered to allow 70" high crosslay height from ground.	$5,839
3130-0321	Pump module. Includes 51" wide pump panel opening and running boards. Includes area forward of pump panel opening for (2) speedlays (stacked), lower storage compartments with push button latches. For use with removable or slide-master tray(s).	$8,343
3130-0322	Pump module. Includes 33" wide pump panel opening and running boards.	$4,790
3130-0323	Pump module. Includes 39" wide pump panel opening and running boards. Includes modifications for 4x4 and plumbing applications as required.	$5,990

3130-0326	Top Mount Pump Module. Includes area for single stacked double crosslay (notched divider) and TM walkway with dual lighted LED folding steps with intergral lights and (2) vertical handrails.	$1,899
3130-0327	Top Mount Pump Module. Includes area for single stacked triple crosslay (notched dividers) and TM walkway with dual lighted LED folding steps with integral lights and (2) vertical handrails.	$2,304
3130-0328	Top Mount Pump Module. Includes area for a double speedlay and TM walkway with dual lighted LED folding steps with integral lights and (2) vertical handrails.	$3,003
3130-0329	Top Mount Pump Module. Includes area for a double speedlay, single crosslay and TM walkway with dual lighted LED folding steps with integral lights and (2) vertical handrails.	$3,408
3130-0330	Crosswalk module. Includes running boards, (1) dual lighted LED folding step each side and access handrails mounted on the pump module.	$944
3130-0331	Crosswalk module. Includes walkway storage compartments with push button latches, running boards, (1) dual lighted LED folding step each side and access handrails mounted on the pump module.	$1,377
3130-0332	Speedlay module(stacked). Includes area for (2) stacked speedlays and (1) upper speedlay (crosslay style, plumbing to be offset to driver side), lower storage compartments with push button latches and running boards. Lower speedlay, upper speedlay and crosslay. For use with removable or slide-master tray(s).	$2,796
3130-0333	Upper SM pump module with bolt-on top. Includes bracing below bolt-on top for light tower mounting. Vertically hinged stainless steel panels with push button latches on each side of the module.	$1,533
3130-0362	Crosswalk module.Includes running boards, (1) dual lighted LED folding step each side and access handrails mounted on the pump module. Diamond plate walkway plate to be 20" wide due to 2-door Freightliner DEF tank.	$944
3130-0364	Special Top Mount Pump Module. Includes area for a double speedlay and TM walkway with dual lighted LED folding steps with integral lights and (2) vertical handrails. Extend-a-gun piping located in the dunnage pan offset to officer side.	$4,053
3130-0365	Upper top mount triple speedlays and storage in remaining area.	$2,624
3130-0366	Speedlay module full width wtih stokes basket and backboard storage. Includes area for (2) speedlays, lower storage compartments with push button latches. Upper area of module to hold (1) stokes basket and (2) backboards. Includes vertically hinged smooth plate door(s) with push button latches.	$4,222
3130-0367	Upper SM pump module with 2.5" double stacked single crosslay and diamond plate storage pan. 300' of 2.5" DJ	$1,771
3130-0368	Pump module. Includes 51" wide pump panel opening and running boards. Upper SM pump module with single stacked double crosslays with diamond plate storage pan. Crosslays to be 68" high from ground.	$6,510
3130-0376	Upper SM pump module with triple crosslays and diamond plate storage pan. Forward (2) crosslays to be single stack and rearward crosslay to be double stack.	$2,214
3130-0377	Upper SM pump module with single stacked triple crosslays and diamond plate storage pan. Rearward crosslay to be double stacked dry lay.	$2,820
3130-0378	Pump module. Includes 33" wide pump panel opening and running boards. Includes modifications for front headboard due to special exhaust routing.	$5,990
3130-0379	Pump module. Includes 51" wide pump panel opening and running boards. Running boards to include gator grip and be painted black duraback.	$5,334
3130-0380	Raised crosswalk module. Includes walkway storage compartments with push button latches, running boards, (1) smooth plate walkway step w/gator grip each side and access handrails mounted on the pump module. Includes 8" raise with 5" high storage compartment with drop down aluminum smooth plate doors with push button latches. T/M walkway and walkway access steps to be smooth plate gator grip to be painted black durabak. All access doors on module to be painted gray zolatone.	$3,301
3130-0382	Pump module. Includes 51" wide pump panel opening and running boards. Includes area forward of pump panel opening for (2) speedlays (stacked), lower storage compartments with push button latches.	$8,133
3130-0383	Pump module. Includes 57" wide pump panel opening and running boards. Crosslays to be 70" high from ground.	$5,954
3130-0384	Upper SM pump module with backboard storage and diamond plate storage pan. Backboard storage to be located rearward of storage pan.	$2,315
3130-0385	Pump module. Includes 45" wide pump panel opening and running boards. Includes area forward of pump panel opening for (3) speedlays (stacked), lower storage compartments with push button latches.	$8,662
3130-0386	Pump module. Includes 69" wide pump panel opening and running boards.	$4,790
3130-0388	Crosswalk module with running boards. Includes upper walkway storage compartments with embossed diamond plate lift-up walkway lids (includes gas shock(s) as required to hold the lids at 90 degrees with butterfly style latch(es) for securing in the closed position). Compartments to be large as possible and include (1) light each (match body compartments for brand and type of light)and door ajar indicator wiring. Outboard sides of walkway to have diamond plate panels and each includes (1) intermediate style step and access handrails mounted on the pump module.	$2,173
3130-0389	Pump module. Includes 57" wide pump panel opening and running boards. Includes area forward of pump panel opening for (3) speedlays (stacked), lower storage compartments with push button latches. For use with removable tray(s).	$7,613
3130-0390	Upper SM pump module with triple crosslays and diamond plate storage pan. Forward (2) crosslays to be single stack and rearward crosslay to be double stack.	$3,969
3130-0391	Upper TM pump module with single stacked triple crosslays. Forward (2) crosslays to be single stack and rearward crosslay to be double stack.	$2,214

3130-0392	Upper TM pump module with single stacked double crosslays and backboard storage. Crosslays to be 6" wide each.	$2,797
3130-0393	Pump module. Includes 45" wide pump panel opening and running boards. Lowered to allow 72" high crosslay height from ground.	$4,790
3130-0394	Pump module. Includes 39" wide pump panel opening and running boards. Includes area forward of pump panel opening for (2) speedlays (stacked), lower storage compartments with push button latches. For use with removable or slide-master tray(s).	$8,343
3130-0395	Upper TM pump module with double stacked double crosslays with backboard storage.	$2,563
3130-0396	Upper SM pump module with double stacked (single stack depth) double crosslays and diamond plate storage pan.	$2,130
3130-0397	Upper SM stainless steel pump module with single stacked triple crosslays and top open storage with treadplate flooring. Crosslay 1 to be a dead lay.	$1,771
3130-0398	Pump module. Includes 45" wide pump panel opening and running boards. Includes area forward of pump panel opening for (2) speedlays (stacked), lower storage compartments with push button latches. For use with removable or slide-master tray(s).	$8,343
3130-0399	Pump module for top mount enclosed operation. Includes 51" panel opening, area for double stacked double speedlay with trays stacked side by side, lower storage compartments with push button latches and running boards. Speedlay floor to be slotted for draining. Includes backboard storage for (3) backboards. Includes deck gun channel and open back storage pan.	$12,325
3130-0400	Pump module. Includes 51" wide pump panel opening and running boards. Lowered to allow 72" high crosslay height from ground.	$5,270
3130-0403	Upper SM pump module with single stacked triple crosslays and transverse storage area rearward of deckgun channel with stainless steel lift-up door with push button latches on driver side.	$2,545
3130-0409	Pump module. Includes 31" wide pump panel opening and running boards.	$4,790
3130-0413	Upper SM pump module with single stacked triple crosslays, deck gun channel and transverse storage area. Transverse storage area to be rearward of the deck gun channel. Includes vertically hinged diamond plate doors with butterfly latches, doors to be hinged rearward.	$3,103
3130-0414	Enclosed Pump Module with Triple Speedlays. Includes 51" wide pump panel opening. Includes area for (3) speedlays with trays, lower storage compartments with push button latches forward of pump panel opening. Upper module area to have storage pan.	$17,043
3130-0415	Upper SM pump module with single stacked triple crosslays and diamond plate storage pan. Each crosslay to be 4.75" wide.	$1,771
3130-0416	Crosswalk module. Includes running boards, (1) dual lighted LED folding step each side and access handrails mounted on the pump module. Includes modifications for 4x4 and plumbing applications as required.	$1,132
3130-0419	Pump module. Includes 39" wide pump panel opening and running boards. Includes modifications for front headboard due to special exhaust routing.	$5,990
3130-0420	Upper SM pump module with double stacked triple crosslays and diamond plate storage pan. Crosslay plumbing to be located as far outboard as possible.	$1,930
3130-0422	Pump module. Includes 45" wide pump panel opening and running boards. Includes area forward of pump panel opening for (3) speedlays (stacked), lower storage compartments with push button latches. For use with removable tray(s).	$8,662
3130-0424	Upper SM pump module with single stacked double crosslays and diamond plate open back storage pan.	$1,412
3130-0426	Upper TM pump module with diamond plate open back storage pan.	$1,861
3130-0427	Upper SM pump module with backboard storage and diamond plate storage pan. Backboard storage to be located forward of storage pan. Backboard storage to be 12" wide and includes divider 4" off forward wall to create two storage spaces.	$2,597
3130-0428	Upper TM pump module with storage area with horizontally hinged access door (wired to door ajar) with push button latches, one each side.	$2,530
3130-0430	Pump module. Includes 39" wide pump panel opening and running boards. Upper SM pump module with double stacked double crosslays. Crosslays to be 66" high from ground.	$6,758
3130-0431	Pump module. Includes 45" wide pump panel opening and running boards. Upper SM pump module with double stacked double crosslays with diamond plate storage pan. Crosslays to be 66" high from ground.	$6,510
3130-0432	Pump module for top mount enclosed operation. Includes 80" panel opening and area for double stacked double crosslay with storage pan. Module has sanded finish and crosslay floors are slotted for draining.	$9,515
3130-0436	Upper SM pump module with single stacked double crosslays and transverse storage area rearward of deckgun channel with aluminum Zolatone lift-up door with push button latches on officer side.	$2,332
3130-0437	Upper SM pump module with single stacked triple crosslays and diamond plate open back storage pan. Duunage pan to be 17.75" deep on driver side due to booster reel height.	$2,294
3130-0438	Speedlay module full width wtih stokes basket and backboard storage. Includes area for (3) speedlays: (1) 2.5" in lower speedlay and (2) 1.5" in upper speedlay, lower storage compartments with push button latches. Upper area of module to hold (1) stokes basket and (2) backboards. Includes vertical hinged smooth plate door(s) with push button latches.	$4,164
3130-0439	Stainless steel 62" wide lower pump module. Includes side running boards with Bustin Tread. This size required for most CAFS units.	$4,894
3130-0440	Upper SM pump module with single stacked triple crosslay, backboard storage and diamond plate storage pan. Rearward crosslays to be double stacked. Crosslays to be 28" deep.	$3,862
3130-0441	Upper TM pump module with double stacked double crosslays. Crosslays to hold 300' of 2.5" DJ hose.	$1,872

3130-0442	Upper SM pump module with single stacked triple crosslays and diamond plate storage pan. Rearward crosslay to hold 150' of 3" DJ hose.	$1,904
3130-0443	Pump module. Includes 51" wide pump panel opening and running boards. Includes area forward of pump panel opening for (2) speedlays (stacked), lower storage compartments with push button latches. Includes modifications for 4x4 and plumbing applications as required.	$8,639
3130-0444	Crosswalk module. Includes walkway storage compartments with push button latches, running boards, (1) dual lighted LED folding step each side and access handrails mounted on the pump module. Includes modifications for 4x4 and plumbing applications as required.	$1,704
3130-0445	Pump module. Includes 39" wide pump panel opening and running boards. Upper SM pump module with single stacked double crosslays and open back storage pan.	$6,492
3130-0447	Pump module. Includes 39" wide pump panel opening and running boards. Includes area forward of pump panel opening for (3) speedlays (stacked), lower storage compartments with push button latches.	$8,026
3130-0449	Top mount eMAX pump module. Includes area for a double speedlay, TM walkway (raised) with compartments, dia plt running boards, folding steps with integral lights and (2) vertical handrails.	$5,192
3130-0450	Pump module top mount with speedlays. Includes 45" wide pump panel opening, dunnage pan and running boards. Top mount walkway includes storage compartments with push button latches, (1) 5" diamond plate top mount walkway step with gator grip each side and access handrails mounted on the pump module. Includes area for (3) speedlays - (2) with 1.5" plumbing and (1) with 2.5" plumbing. The front area of the speedlays to have a removable diamond plate panel with D-ring latches.	$10,561
3130-0451	Pump module. Includes 57" wide pump panel opening and running boards. Upper SM pump module with single stacked triple crosslays, backboard storage and diamond plate storage pan. Crosslays to be 65" high from ground.	$9,035
3130-0452	Speedlay module. Includes area for (2) speedlays with dividers, (1) area for backboard storage with hinged doors with latches, lower storage compartments with D-ring latches and running boards. Speedlays to hold 250' of 1.75 each.	$3,288
3130-0453	Crosswalk module. Includes walkway storage compartments with D-ring latches, running boards, (1) dual lighted LED folding step each side and access handrails mounted on the pump module.	$1,377
3130-0454	Upper SM pump module with double stacked double crosslays and diamond plate storage pan. Crosslay divider to be adjustable side to side.	$1,752
3130-0455	Pump module. Includes 51" wide pump panel opening and running boards. (Tradition style pump module see body layout). Includes area forward of pump panel opening for (2) speedlays (stacked), lower storage compartments with push button latches.	$8,132
3130-0456	Upper TM pump module with double stacked single crosslay and backboard storage.	$2,534
3130-0457	Upper SM pump module with single stacked double crosslay, backboard storage and diamond plate open back storage pan.	$2,716
3130-0458	Upper stainless steel pump module with single stacked quad crosslays and top open storage with treadplate flooring. Crosslay floors lowered to approximately 72" above ground.	$2,765
3130-0459	Speedlay module to be mounted with backboard storage located forward. Two (2) latches shall be used to secure the doors. One (1) top and one (1) bottom.	$296
3130-0460	Upper SM pump module with single stacked double crosslay, backboard storage forward of crosslays and diamond plate open back storage pan.	$2,406
3130-0462	Upper TM pump module with single stacked quad crosslays and backboard storage. Crosslay preconnects to be offset to driver side of module.	$3,524
3130-0464	Upper SM stainless steel pump module with double stacked double crosslays for 1-1/2" DJ hose and top open storage with treadplate flooring. Width of each of the crosslay beds must be 6-1/2".	$1,412
3130-0465	Upper SM pump module with quad single stacked crosslays and diamond plate storage pan. The rear crosslay is for dry hose storage. The (3) forward crosslays to be 5.5" wide and the rearward crosslay to be 6" wide.	$2,343
3130-0467	Side Mount Pump Module. Includes area for double stacked double crosslay (notched dividers). Crosslay opening to be same as standard tradition triple crosslay design.	$923
3130-0468	Upper SM pump module with double stacked single crosslay and diamond plate storage pan. 400' of 1.75" DJ	$1,771
3130-0469	Upper SM pump module with quad single stacked crosslays and diamond plate storage pan. Rearward (2) crosslays to be 3" DJ dry lays.	$2,130
3130-0470	Pump module top mount with single stack double crosslay, double speedlay (9" wide) and diamond plate storage pan. Includes 45" wide pump panel opening and running boards. Top mount walkway storage compartments with push button latches, (1) 5" diamond plate top mount walkway step with gator grip each side and access handrails mounted on the pump module. Deck gun to be located in channel centered in storage pan running front to back. Embossed diamond plate covers with D-ring latches (wired to door ajar switch) each side of deck gun channel, covers to be reinforced and hinged to front.	$11,397
3130-0472	Upper SM pump module with single stacked triple crosslay, backboard storage and diamond plate storage pan. Rearward crosslay to be for 2.5" dry lay. Stoage pan to be open back style due to generator.	$3,862
3130-0473	Vertical speedlay module welded integral to front of pump enclosure. Includes 12" wide area for (2) speedlays.	$2,099
3130-0474	Top mount eMAX pump module. Includes area for a double speedlay, TM walkway (raised) with compartments, dia plt running boards, fixed walkway steps and (2) vertical handrails.	$5,192
3130-0475	Upper TM pump module with triple stacked double crosslays.	$1,575
3130-0476	Top mount SS eMAX pump module. Includes area for double speedlays, TM walkway with compartments, treadplate running boards with Bustin Tread inserts and (2) vertical hand rails.	$5,863

3130-0477	Triple Speedlays with Enclosed Pump Panel Full Width Module. Includes 45" wide pump panel opening. Includes area for (3) speedlays and lower storage compartments with push button latches forward of pump panel opening. Backboard/stokes basket storage above the speedlays. Upper module area above the pump panel to have storage pan.	$17,685
3130-0480	Upper SM pump module with single stacked double crosslay, New York Hook storage with horizontal divider 8" off floor and diamond plate open back storage pan.	$2,716
3130-0481	Pump module. Includes 51" wide pump panel opening and running boards. Upper SM pump module with single stacked triple crosslays, backboard storage and diamond plate storage pan. Crosslays to be 72" high from ground.	$8,092
3130-0483	Transverse Module (narrow). Locate forward of pump area. Includes a single compartment opening per side (with a shallow lower area and a transverse upper area with diamond plate flooring) and running boards. Upper area for triple crosslay, forward (2) crosslays to be single stacked for 200' of 1.75 DJ hose per lay and rearward crosslay to be single stacked for 150-200' of 2.50" DJ hose.	$4,426
3130-0484	Upper SM pump module with backboard storage and diamond plate storage pan. Backboard storage to be located forward of storage pan. Deck gun piping to be located forward center area of pan and just rearward of back board compartment.	$2,315
3130-0486	Upper TM pump module with smooth plate storage pan. Side panels to be Zolatone gray. Storage pan to be painted black durabak.	$2,050
3130-0487	Pump module. Includes 57" wide pump panel opening and running boards. Running boards to be painted black durabak.	$5,115
3130-0488	Painted crosswalk area to includes all smooth plate and extrusion surfaces exposed to exterior in the crosswalk area (speedlay and pump module) to be painted job color. Does not include top facing exposed surfaces.	$2,381
3130-0489	Crosswalk module. Includes walkway storage compartments with push button latches, running boards, (1) dual lighted LED folding step each side and access handrails mounted on the pump module. Compartment doors to be painted job color. Crosswalk and running boards to be painted durabak black.	$1,843
3130-0491	Upper SM stainless steel pump module with single stacked triple crosslays and top open storage with treadplate flooring. Capacities of 300', 200' and 200' of hose for selected discharges.	$1,976
3130-0492	Pump module. Includes 45" wide pump panel opening and running boards. Upper SM pump module with single stacked double crosslays with diamond plate storage pan. Crosslays to be 72" high from ground.	$6,510
3130-0493	Speedlay module full width with stokes basket and backboard storage. Includes area for (2) speedlays: (2) 1.5" side by side speedlay storage compartments. Upper area of module shall have (2) adjustable dividers to hold (1) stokes basket and (2) backboards. Includes vertically hinged smooth plate door(s) with push button latches.	$4,164
3130-0494	Upper TM pump module with a transverse storage compartment with aluminum tread plate vertical hinged doors (1) each end of the compartment and a embossed tread plate top.	$2,004
3130-0495	Enclosed Pump Module with Double Speedlays. Includes 47.5" wide pump panel opening. Includes area for (2) stacked speedlays, lower storage compartments with push button latches forward of pump panel opening. Upper module area to have storage pan.	$17,358
3130-0496	Upper SM pump module. Crosslay area to be: (2) compts 4.5" at base, (1) compt 4.75" at base and (1) compt 7.5" at base. Ensure that each crosslay is wide enough to accommodate the nozzles so they are easily deployed for each side. Backboard storage and diamond plate storage pan. Crosslays to be 28" deep.	$4,196
3130-0497	Upper TM pump module with modified sides for improved visibility and diamond plate storage pan.	$2,154
3130-0499	Upper stainless steel pump module with single stacked quad crosslays and top open storage with treadplate flooring. Crosslay floors located approximately 75" above ground. Top mount pump module only.	$2,765
3130-0500	Upper SM pump module with forward (2) crosslays to be single stack and rearward crosslay to be double stack includes diamond plate storage pan.	$3,969
3130-0501	Upper SM pump module with single stacked quad crosslays and diamond plate storage pan. Crosslays to be 28" deep due to additional capacity.	$2,546
3130-0503	Crosswalk module. Includes running boards, (1) intermediate style step each side and access handrails mounted on the pump module. Crosswalk, intermediate steps and running boards to be 3/16" aluminum treadplate plate.	$1,218
3130-0504	Speedlay module. Includes area for (2) speedlays 15" front to rear with center divider curt to a height of 24", lower storage compartments with push button latches and running boards.	$2,206
3130-0505	Pump module top mount with speedlays. Includes 45" wide pump panel opening, dunnage pan and running boards. Top mount walkway includes storage compartments with push button latches, (1) 10" diamond plate top mount walkway step with gator grip each side and access handrails mounted on the pump module. Includes area for (3) speedlays - (2) with 1.5" plumbing and (1) with 2.5" plumbing. The front area of the speedlays to have a removable diamond plate panel with D-ring latches.	$11,061
3130-0506	Pump module. Includes 63" wide pump panel opening and running boards. Upper SM pump module with double stacked double crosslays with diamond plate storage pan. The hose to be in three (3) poly trays of 200' each. The module to be stepped up rearward of the crosslays.	$6,510
3130-0507	Crosswalk module. Includes walkway storage compartments with push button latches, running boards, (1) dual lighted LED folding step each side and access handrails mounted on the pump module. The crosswalk shall be raised to accommodate storage of (2) backboards.	$1,528

3130-0510	Pump module top mount with speedlays. Includes 51" wide pump panel opening and running boards. Includes area forward of pump panel opening for (2) speedlays (stacked). Includes crosswalk module and walkway storage compartments with push button latches, (1) dual lighted LED folding step each side and access handrails mounted on the pump module.	$10,221
3130-0511	Pump module. Includes 39" wide pump panel opening with integral double speedlays and running boards. Upper SM pump module with double stacked single crosslay and diamond plate storage pan.	$10,392
3130-0512	Enclosed triple vertically stacked speedlays with trays, 14" wide, capacities to be for the selected size preconnect discharges. Speedlay assembly welded integral to the front of SS pump enclosure. For use with enclosed side pump panels with special WB dimension added to create space for door openings. (Actual WB dimension for this application is 22".)	$2,307
3130-0513	Transverse full width module (24" wide) with full height doors. Located behind cab, and stands alone. Includes a single compartment opening per side (with approximately 27" deep lower area and a transverse upper area).	$3,910
3130-0514	Upper SM pump module with single stacked triple crosslays and transverse storage area rearward of deckgun channel with stainless steel lift-up doors with push button latches. (1) On driver and (1) on officer side.	$2,671
3130-0515	Pump module top mount with speedlays. Includes 45" wide pump panel opening, dunnage pan and running boards. The crosswalk shall be raised 3". The area directly below the crosswalk walkway shall include five (5) compartments, one (1) each side for storage in the lower area and a horizontal storage directly under the walkway surface with three (3) compartments.	$11,211
3130-0516	Pump module - one piece. Includes 49.5" wide pump panel opening includes smooth plate aluminum painted black Durabak with gator grip for running boards.	$4,790
3130-0517	Double stacked 15"D triple crosslays and aluminum smooth plate storage pan painted black durabak. (2) 7.5" wide each to hold 250'-1.75"DJ & (1) 10.5" wide to hold 200'-2.5"DJ.	$2,257
3130-0518	Crosswalk module. Includes walkway storage compartments with D-ring latches, running boards, (1) dual lighted LED folding step each side and access handrails mounted on the pump module.	$1,377
3130-0519	Pump module for top mount enclosed operation. Includes 45" panel opening and area for single stacked double crosslay and deck gun channel. Module has sanded finish and crosslay floors are slotted for draining.	$9,265
3130-0520	Upper SM pump module with double stacked double crosslays and transverse storage area. Transverse storage area to be rearward crosslays. Includes horizontally hinged diamond plate doors with thumb latches, doors to be hinged at top. Each crosslay to accommodate (1) removable poly tray (removable tray(s) sold separately).	$3,103
3130-0522	Upper SM pump module with double stacked triple crosslay, deck gun channel and backboard storage. The rear crosslay is for dry hose storage.	$2,483
3130-0523	Side mount pump module. Extruded aluminum with runningboards.	$4,790
3130-0524	Top mount pump module with 20" walkway. Extruded aluminum with runningboards.	$5,708
3130-0525	Top mount pump module with walkway and integral double speedlays (9" W). Extruded aluminum with runningboards. Includes formed walkway access steps.	$7,074
3130-0526	Top mount pump module with walkway and integral triple speedlays (13" W). Extruded aluminum with runningboards. Includes formed walkway access steps.	$7,515
3130-0527	Upper SM pump module with 8" channel forward for turret , 2.5" single stacked single crosslay and diamond plate storage pan.	$2,015
3130-0528	Upper SM pump module with single stacked triple crosslays and diamond plate storage pan. Crosslay 3 to be a dead lay.	$1,771
3130-0529	Enclosed Pump Module with Double Speedlays. Includes 40.5" wide pump panel opening. Includes area for (2) stacked speedlays, lower storage compartments with D-handle latches forward of pump panel opening. Upper module area to have storage pan.	$17,358
3130-0530	A side mount pump module with triple crosslays. The module shall have overall dimensions of 70"H x 72"W (not including runningboards) x 49"L (front to rear).	$7,002
3130-0542	Speedlay module. Includes area for (2) speedlays with divider forward, (1) area for four (4) pike pole storage tubes to accommodate 6' pike poles in rearward lower area of module staggered two tubes on forward compartment wall and two tubes on rearward compartment wall. Upper area of rearward storage area over the pike poles there shall be a shovel storage compartment in remaining space which is open to the top of module when lid on top is opened. There shall be a bolt in divider between the pike pole storage and the upper shovel area. There shall be a hinged door on officer side only of rearward upper pike and shovel storage area with 2 push button latches, lower storage compartments with push button latches and running boards. All storage doors shall be wired to door ajar circuit in accordance with NFPA.	$3,475
3130-0543	Upper SM pump module with 2.5" double stacked single crosslay and diamond plate storage pan. 250' of 2.50" DJ	$1,771
3130-0544	Triple vertically stacked speedlays for top console 12" wide (no trays), capacities to be for the selected size preconnect discharges. Speedlay assembly welded integral to the front of SS pump enclosure. Bustin Tread in side running boards of speedlay area.	$2,204
3130-0545	Upper SM pump module with single stacked triple crosslay, backboard storage and diamond plate storage pan.	$2,866
3130-0546	Crosswalk module. Includes stainless steel walkway storage compartments with lift-up access lids and butterfly latches, non-skid running boards with Bustin Tread, and access hand rails mounted one each side to the front of the pump enclosure assembly.	$2,334
3130-0547	Stainless steel 50" wide lower pump module. Includes side running boards with Bustin Tread inserts.	$4,542

3130-0548	Upper SM stainless steel pump module with (2) triple stacked crosslays and top open storage with treadplate flooring.	$1,476
3130-0549	Upper SM stainless steel pump module with (3) crosslays in both single and double stacks, and top open storage with treadplate flooring.	$1,715
3130-0550	Upper TM stainless steel pump module with (2) triple stacked crosslays.	$1,622
3130-0551	Upper TM stainless steel pump module with (3) crosslays in both single and double stacks.	$1,860
3130-0554	Pump module. Includes 39" wide pump panel opening and running boards. Upper SM pump module with double stacked double crosslays and transverse storage area. Transverse storage area to be rearward crosslays. Includes horizontally hinged diamond plate doors with push button latches. Each crosslay to accommodate (1) removable poly tray (trays not included).	$7,892
3130-0555	Pump module. Includes 41" wide pump panel opening and running boards. Upper SM pump module with diamond plate storage pan and forward transverse compartment with double stacked double crosslays. Crosslays to be 12" wide and 15" deep.	$11,117
3130-0556	Upper TM stainless steel pump module with single stacked double crosslays and a transverse storage compartment with top open storage (if space available) with treadplate flooring.	$2,534
3130-0557	Stainless steel 70" wide lower pump module. Includes side running boards with Bustin Tread. This size is used for some big Industrial type foam systems.	$4,790
3130-0558	Upper SM pump module with double stacked triple crosslays.	$1,489
3130-0560	Pump module. Includes 45" wide pump panel opening and running boards. Includes area forward of pump panel opening for (2) stacked speedlays and (1) upper speedlay (crosslay style), lower storage compartments with push button latches.	$10,269
3130-0561	Upper TM pump module with single stacked single crosslay and backboard storage.	$3,549
3130-0562	Crosswalk module. Includes running boards. The crosswalk shall be raised 8". (1) Dual lighted LED folding step each side and access handrails mounted on the pump module.	$1,100
3130-0563	Top mount eMAX pump module for use with a (2) arm ladder rack. Includes area for a double speedlay, TM walkway (raised) 21" front to rear without compartments, dia plt running boards, folding steps with integral lights and (2) vertical handrails.	$5,192
3130-0565	Upper SM pump module with triple crosslays and diamond plate storage pan. Forward (2) crosslays to be single stack and rearward crosslay to be double stack.	$2,021
3130-0566	Speedlay module. Includes area for (2) speedlays, (1) area for backboard storage and Little Giant ladder with hinged doors with latches, lower storage compartments with push button latches and running boards.	$2,765
3130-0568	Pump module. Includes 45" wide pump panel opening and running boards. Upper SM pump module with double stacked triple crosslays with diamond plate storage pan.	$6,510
3130-0569	Upper TM pump module with 2.5" single stacked single crosslay.	$1,700
3130-0570	eMAX Tanker Pump module. Includes enclosed pump panel, compt on officer side (opposite pump panel), lower and upper storage areas, center front pump access doors, removable center floor in upper area, storage pan. Lower storage area to hold (1) tray for 200' of 1.75" DJ preconnected hose and (1) tray for 200' of 2.5" DJ preconnected hose. Upper storage area to hold (1) tray for 200' of 1.75" DJ preconnected hose offset to rear and storage area for (2) backboards vertically stored offset forward w/sleeve each side of center pump access.	$8,065
3130-0571	Upper TM pump module with double stacked single crosslay and pike pole storage.	$2,534
3130-0572	Top mount pump module with 19" walkway. Extruded aluminum with runningboards.	$5,708
3130-0573	Transverse module (18" wide) with brushed stainless steel doors. Located forward of pump area and welded integral. Includes a single stainless steel compartment opening per side (with a shallow lower area and a transverse upper area) and side running boards with Bustin Tread.	$2,256
3130-0574	Transverse Module (narrow) 24.5. Locate forward of pump area. Includes a single compartment opening per side (with a shallow lower area and a transverse upper area with diamond plate flooring) and running boards.	$2,230
3130-0575	Transverse Module (full width). Locate forward of pump area. Includes a single compartment opening per side (with a shallow lower area and a transverse upper area with diamond plate flooring). Upper area for double stacked double crosslay.	$3,796
3130-0577	Upper TM pump module with double crosslays. Forward crosslay to be double stacked and rearward crosslay to be dry lay for storage to include (2) pike pole tubes for 6' pike poles located on the rearward wall.	$2,511
3130-0578	Speedlay module. Includes a lower double preconnect storage area, upper preconnect storage area, sleeve in upper storage area for (2) backboards (vertically stored offset forward) lower storage compartments with push button latches and running boards.	$3,209
3130-0579	Pump module. Includes 51" wide pump panel opening and running boards. Upper SM pump module with (4) single stacked single crosslays with diamond plate storage pan. Crosslays to be 66" high from ground.	$6,510
3130-0580	Top mount eMAX pump module. Includes area for a double speedlay, TM walkway (raised) with compartments with embossed diamond plate lift-up walkway lids (includes gas shock(s) as required to hold the lids open with butterfly style latch(es) for securing in the closed position). Comparments to be large as possible and include (1) light (match body compartmnets for brand and type of light) door ajar indicator wiring. Outboard sides of walkway to have diamond plate panels. Dia plt running boards, Gator Grip fixed walkway steps and (2) vertical handrails.	$5,990
3130-0581	Upper SM pump module with double stacked double crosslay, backboard storage and diamond plate storage pan.	$2,551
3130-0582	Speedlay module. Includes area for (2) speedlays with center divider, lower storage compartments with push button latches and running boards.	$1,652

3130-0583	Transverse Module (narrow). Locate forward of pump area. Includes a single compartment opening per side (with a shallow lower area and a transverse upper area with diamond plate flooring) and running boards. Upper area for double crosslay/drylay, forward crosslay to be single stacked and rearward drylay to be double stacked.	$4,630
3130-0586	Pump module. Includes 45" wide pump panel opening and running boards. Upper SM pump module with 1.5" single stacked double crosslays 71" from ground, 2.5" double stack single dry crosslay stepped up 7" from double crosslay and diamond plate storage pan.	$8,311
3130-0587	Pump module. Includes 45" wide pump panel opening and running boards. Upper SM pump module with single stacked double crosslays, backboard storage and open back storage pan. Crosslays and backboard storage to be stepped down 8".	$7,196
3130-0588	Pump module. Includes 45" wide pump panel opening and running boards. Upper SM pump module with single stacked double crosslays, backboard storage and open back storage pan.	$7,196
3130-0589	Transverse Module (full width). Locate forward of pump area. Includes a single compartment opening per side (with a shallow lower area and a transverse upper area with smooth plate flooring).	$2,921
3130-0590	Transverse module to hold: Four (4) shoreboards 48" x 92" on edge.	$1,215
3130-0591	Transverse Module (narrow). Locate forward of pump area. Includes Upper and Lower compartment openings each side of module, a 3" extrusion located between upper and lower openings. The separate lower, "tool style" compartment on each side of module shall be shallow with diamond plate flooring, and include a diamond plate door with D-ring door latch. The upper transverse storage area shall include a diamond plate floor that shall extend out to the 3" extrusion which separates the upper and lower compartment openings.	$4,515
3130-0592	Speedlay module. Includes area for triple speedlays with divider(s) and lower storage compartments with push button latches and running boards. The side facing tool compartment doors along with the front and rear facing panels are to be smooth plate and painted gray Zolatone. Running boards to include gator grip and be painted black Durabak.	$3,126
3130-0593	Upper TM pump module with smooth plate side panels painted job color and smooth plate storage pan painted black Durabak.	$1,967
3130-0594	Pump module. Includes 45" wide pump panel opening and running boards. The front access door and the front panels to be smooth plate and painted gray Zolatone. Running boards to include gator grip and be painted black duraback. Used on TM module only.	$5,988
3130-0595	Upper SM pump module with double stacked quad crosslays and no storage pan. Crosslays to be 23" deep. For use on narrow 39" module only with applications approval that no pump panel will be utilized on upper module.	$2,523
3130-0597	Transverse Module (narrow). Locate forward of pump area. Includes a single compartment opening per side (with a shallow lower area and a transverse upper area with diamond plate flooring) and running boards. Upper area for triple crosslay, forward (2) crosslays to be single stacked for 200' of 2.00" DJ hose per lay and rearward crosslay to be single stacked for 150' of 2.50" DJ hose.	$4,426
3130-0598	Pump module. Includes 51" wide pump panel opening and running boards. Upper SM pump module with single stacked double crosslays, backboard storage and diamond plate storage pan. Crosslays to be @ 72" high from ground.	$7,733
3130-0599	Crosswalk module. Includes walkway storage compartments with push button latches, running boards, (1) dual lighted LED folding step each side and access handrails mounted on the pump module. Diamond plate walkway plate to be 21" wide due to 2-door Freightliner DEF tank.	$1,377
3130-0601	Pump module. Includes 51" wide pump panel opening and running boards. Upper SM pump module with double stacked triple crosslays with diamond plate storage pan. Crosslays to be 70" high from ground. Front headboard of module to be lowered 10" and provisions added to mount crosslay cover forward of deck gun channel.	$6,804
3130-0602	Dunnage pan notch. Located in the pump module. Pan to have a notch on the rear wall for the ladders to extend into.	$257
3130-0604	Upper SM pump module with double stacked double crosslay, backboard storage and diamond plate storage pan.	$2,527
3130-0605	Pump module. Includes 51" wide pump panel opening and running boards. Upper SM pump module with double stacked triple crosslays single stack depth for extra capacity with diamond plate storage pan. Crosslays to be 70" high from ground.	$7,086
3130-0606	Upper SM stainless steel pump module with double stacked double crosslays for 1-1/2" DJ hose and top open storage with treadplate flooring. Width of each of the crosslay beds must be 6-1/2". Crosslay height to be aprox. 65" from ground.	$1,656
3130-0607	Upper SM pump module with single stacked triple crosslays and enclosed storage compartment with vertical hinged (rearward) diamond plate access door (1) each side and a bolt-on diamond plate top. Inside compartment will be a vertical partition centered in the opening and a full width adjustable shelf forward of the patition.	$3,832
3130-0608	Top mount eMAX pump module for use with a (2) arm ladder rack. Includes area for a raised double speedlay, TM walkway (raised) 21" front to rear, diamond plate access doors without compartments, dia plt running boards, folding steps with integral lights and (2) vertical handrails. For use with 4X4 application.	$5,192

3130-0609	Pump module top mount with speedlays. Includes 45" wide pump panel opening, dunnage pan and running boards. The crosswalk shall be raised 3". The area directly below the crosswalk walkway shall include three (3) compartments, one (1) each side for storage in the lower area and a horizontal transverse backboard storage directly under the walkway surface with an access door on both sides of the module. (1) 14" diamond plate top mount walkway step with gator grip each side and access handrails mounted on the pump module. Includes area for two (2) speedlays with 1.5" plumbing, one (1) discharge swivel to either side of the body. The front area of the speedlays to have a removable diamond plate panel with D-ring latches.	$10,865
3130-0610	Heat shield. Locate below diamond plate walkway top.	$129
3130-0612	Upper SM pump module with storage for (2) New York Hook pike poles and diamond plate storage pan.	$2,406
3130-0613	Pump module. Includes 57" wide pump panel opening and running boards. Upper SM pump module with double stacked double crosslays, backboard storage, and diamond plate storage pan. Crosslays to be 66-68" high from ground.	$6,870
3130-0614	Pump module top mount with 39" wide pump panel opening, triple sgl stack crosslays rear of TM panel and integral walkway with compartments. Includes dia plt running boards.	$8,035
3130-0615	Upper SM stainless steel pump module with double stacked quad crosslays with top open storage with treadplate flooring.	$1,892
3130-0616	Pump module top mount with speedlays. Includes 45" wide pump panel opening and running boards. Includes area forward of pump panel opening for (2) speedlays (stacked). Includes crosswalk module and walkway storage compartments with push button latches, (1) dual lighted LED folding step each side and access handrails mounted on the pump module.	$9,591
3130-0617	Upper SM pump module with single stacked triple crosslays and rear of the crosslays a Double Stacked Dry Lay.	$3,798
3130-0618	Crosswalk module. Includes walkway storage compartments with push button latches, running boards, (1) dual lighted LED folding step each side and access handrails mounted on the pump module. The crosswalk shall be raised to accommodate storage of (1) backboard.	$1,528
3130-0619	Pump module. Includes 51" wide pump panel opening, integral walkway and running boards. Includes area forward of pump panel opening for (2) speedlays (stacked), lower storage compartments with push button latches, (1) dual lighted LED folding step each side and access handrails mounted on the pump module.	$9,995
3130-0620	One (1) diamond plate gator grip step each side of TM walkway in place of the standard folding step.	$214
3130-0623	Pump module. Includes 39" wide pump panel opening with integral double speedlays and running boards. Upper SM pump module with diamond plate storage pan.	$10,392
3130-0624	Top Mount Enclosed Pump Module. Includes 39" panel opening and area directly below the top mount controls for a double stacked double speedlay with removable aluminum trays stacked side by side, lower storage compartments with push button latches and running boards. The upper module will include a storage pan.	$10,326
3130-0626	Pump module top mount with better visability and with speedlays. Includes 45" wide pump panel opening, dunnage pan and running boards. Top mount walkway includes storage compartments with push button latches, (1) dual lighted LED folding step each side and access handrails mounted on the pump module. Includes area for (3) speedlays - (2) with 1.5" plumbing and (1) with 2.5" plumbing.	$10,855
3130-0627	Pump module. Includes 51" wide pump panel opening and running boards. Upper SM pump module with double stacked double crosslays with diamond plate storage pan. Crosslays to be 66" high from ground.	$6,476
3130-0628	Pump module top mount with better visability and with speedlays. Includes 45" wide pump panel opening, dunnage pan and running boards. Top mount walkway includes storage compartments with push button latches, (1) dual lighted LED folding step each side and access handrails mounted on the pump module. Includes area for (3) speedlays - (2) with 1.5" plumbing and (1) with 2.5" plumbing. Each speedlay to have a 200' capacity of hose.	$10,855
3130-0629	Upper SM pump module with single stacked double crosslay, cribbage storage and diamond plate storage pan. Cribbage storage to be a minimum 4" clear opening (including latch).	$2,651
3130-0630	Upper SM pump module with double stacked triple crosslays (single stacked depth) and rear of the crosslays a single stacked Dry Lay.	$3,798
3130-0632	Upper SM pump module with diamond plate storage pan and storage compartment. Storage compartment located forward of storage pan. Includes (1) full height adjustable divider and vertically hinged stainless steel door each side and push button latches.	$4,574
3130-0633	Upper stainless steel pump module with single stacked triple crosslays and top open storage with treadplate flooring. Crosslay floors lowered to approximately 66" above ground. Crosslay plumbing terminates at side panels below beds.	$2,765
3130-0637	Double vertically stacked speedlays for use with removable trays, 9.5" wide, capacities to be for the selected size preconnect discharges. Includes (1) crosslay at top above speedlays. Module assembly welded integral to the front of SS pump enclosure. Actual module width 13".	$2,776
3130-0639	Pump module one piece. Includes 39in. wide pump panel opening and running boards. Upper SM pump module with single stacked double cross lays and a transverse storage located rearward of cross lays equipped with boxed out lift up tread lids on both sides to accommodate storage of up to a 86in. length stokes basket and a nested back board. Boxed out doors to have D-ring latches, Stainless steel staked hinges and gas shocks and be designed to lift up high enough to easily deploy equipment from below. Door to be tied to door ajar circuit in cab. Upper module to be raised to also accommodate a dunnage pan.	$7,951

3130-0640	Enclosed Pump Module with Double Speedlays. Includes 40.5" wide pump panel opening. Includes area for (2) stacked speedlays, lower storage compartments with D-handle latches forward of pump panel opening. Upper module area to have storage pan.	$17,358
3130-0641	Top mount pump module with 20" walkway and running boards. Includes area forward of pump panel opening for (2) speedlays (stacked), lower storage compartments with push button latches.	$8,133
3130-0643	Interior of Backboard Storage compartment shall include gray zoloatone on floor, sides, and top of storage enclosure. Floor of compartment to include a composite material overlay.	$676
3134-0006	The single gauge panel on the driver's side of the side mount module is to be hinged downward. Includes two (2) cable hold opens, and latches.	$131
3134-0009	The gauge panel(s) on the driver side of the Side Mount module to be hinged upward. Includes two (2) gas shock hold opens and latches.	$131
3134-0011	Officer side pump panel to be vertical hinged on forward extrusion. Panel(s) to be secured in the closed position with push button latches. Upper panel to be held open with gas shock.	$481
3134-0013	Driver and Officer side pump panels to be vertical hinged on forward extrusion. Panels to be (2) or (3) pieces, depending on module height, and secured in the closed position with push button latches. Upper panels to be held open with gas shock.	$958
3134-0015	Stainless steel TM control panel, driver and officer side pump panels.	$932
3134-0017	The TM control panel, driver and officer side pump panels are to be painted Zolatone black.	$785
3134-0018	The TM control panel, driver and officer side pump panels are to be painted Zolatone gray.	$785
3134-0019	The driver and officer side pump panels are to be painted Zolatone black.	$611
3134-0020	The driver and officer side pump panels are to be painted Zolatone gray.	$611
3134-0021	Body mainframe and upper body/hosebed side assemblies for a 95" high body.	$1,273
3134-0026	Pump panel support angles. Locate up to (3) horizontal mounted as required on interior side of the main vertically hinged pump panel(s).	$149
3134-0027	TM control panel to be Zolatone gray and driver and officer side panels to be stainless steel.	$553
3134-0028	Pump panel layout and approval drawing to match existing and/or previous unit. To match as close as possible (Engineering and/or vendor requirements may alter final panel layout).	$406
3134-0036	The TM control panel to be painted zolatone black and the driver and officer side pump panels are to be stainless steel.	$1,021
3134-0037	Driver side pump panel to be vertically hinged on forward extrusion. Panel to be (2) piece and lower panel to be secured in the closed position with push button latches. Upper panel to be stationary. Includes vertically hinged panel rearward of backboard storage to be secured in the closed position with push button latches.	$672
3134-0038	Diagramatic Color coded overlay around control handles and discharges	$44
3134-0042	Pump panels. Driver side upper pump access panel to be horizontally hinged with diamond plate door. Includes (2) push-button latches and (2) hold opens. Officer side pump panel to be vertically hinged on forward extrusion. Panel to be (2) or (3) pieces, depending on module height, and secured in the closed position with push button latches. Upper panel to be held open with gas shock.	$958
3134-0043	Rear Mount pump access door. Includes (2) push button latches and (2) hold open devices. Door to be [#LOC]. Door to open to 90 degrees and includes pull strap for access from ground.	$468
3134-0048	Rear mount pump panel to be vertically hinged on driver side extrusion. Panel(s) to be secured in the closed position with push button latches.	$672
3134-0049	The main rear pump panel to be vertically hinged along officer side. Includes push-button latches and cable mounted hold open.	$481
3134-0051	Driver and Officer side upper pump access panels to be horizontally hinged with diamond plate doors. Includes (2) D-ring latches and (2) hold opens for each.	$568
3134-0052	Driver side pump panel to be vertically hinged on forward extrusion. Panel to be (2) piece and lower panel to be secured in the closed position with push button latches. Upper panel to be stationary.	$672
3134-0053	Officer side pump panel Escutchion Plate shall be attach with Thumb Latch.	$173
3134-0055	Officer side upper pump access panel to be horizontal hinged with stainless steel door. Includes (2) push button latches and (2) hold open devices.	$204
3134-0056	Driver side panel shall be attach with screw.Officer side pump panels to be vertically hinged on forward extrusion. Panels to be (2) or (3) pieces, depending on module height, and secured in the closed position with push button latches. Upper panels to be held open with gas shock.	$958
3134-0063	The rear mount gauge panel to be hinged upward. Includes (2) mechanical/pneumatic (as applicable to panel size) hold opens and latches.	$153
3134-0064	The gauge panel(s) on the driver side of the Side Mount module to be hinged upward. Panel(s) to include (2) mechanical/pneumatic (as applicable to panel size) hold opens and latches.	$131
3134-0065	Driver and Officer side pump panels. Upper panel to be bolt-on diamond plate panel. Lower pump panel to be vertically hinged on forward extrusion. Panel to be secured in the closed position with push button latches.	$1,342
3134-0066	Officer side upper pump access panel to be horizontally hinged with smooth plate door painted Zolatone black. Includes (2) push button latches and (2) hold open devices.	$611
3134-0067	Driver side pump panel to be full width of pump module due to thru-bolted push/pull rod extrusion.	$133
3134-0068	Driver side panel shall be attach with screw and Escutchion Plate shall be vertically hinge forward.Officer side pump panels to be vertically hinged on forward extrusion. Panels to be (2) or (3) pieces, depending on module height, and secured in the closed position with push button latches. Upper panels to be held open with gas shock.	$958
3134-0069	The stainless steel single gauge panel on the driver side of the side mount pump module is to be hinged downward. Includes two (2) cable hold opens, and latches.	$131

3134-0070	The stainless steel double gauge panels on the driver side of the side mount pump module are to be hinged downward. Includes two (2) cable hold opens and latches, per door. Required with 6" master gauges and/or overcrowded single lower gauge panels.	$263
3134-0072	Driver and officer side mounted pump panels are to be brushed stainless steel.	$526
3134-0073	Driver and officer side mount pump panels are to be stainless steel with black Zolatone finish. Includes black suction and discharge bezels.	$611
3134-0074	The top mount control panel and the driver and officer side pump panels are to be brushed stainless steel.	$932
3134-0075	The top mount control panel and the driver and officer side pump panels are to be stainless steel with a black Zolatone finsh.	$785
3134-0078	Special Driver and Officer side pump panels to be vertically hinged on forward extrusion. Panels to be (2) or (3) pieces, depending on module height, and secured in the closed position with push button latches. Upper panels to be held open with gas shock.	$1,378
3134-0082	Driver side pump panel Escutchion Plate shall be hinge forward. Include thumb Latches.	$259
3134-0083	The main and lower pump panel to be inset in the rear body and to run full height just below the roll-up door drum. Panels to enclosed on the sides and bottom with bolt-in plates matching main panel material.. Panel materials to be [#LOC].	$480
3134-0084	Driver and Officer side upper pump access panels to be horizontally hinged with aluminum smooth plate doors painted job color. Includes (2) push-button latches and (2) hold opens for each.	$611
3134-0086	The side pump intake / discharge panels to be painted Zolatone gray. eMAX only.	$302
3134-0087	Pump operator control panel in driver side forward body compartment to be painted Zolatone gray. eMAX only.	$383
3134-0088	The side pump intake / discharge panels to be painted Zolatone black. eMAX only.	$302
3134-0089	Pump operator control panel in driver side forward body compartment to be painted Zolatone black. eMAX only.	$383
3134-0090	Custom sized stainless steel gauge panel(s) on the driver side of the side mount pump panel are to be hinged downward. Includes two (2) cable hold opens and latches.	$1,811
3134-0091	Officer side upper pump access panel to be horizontally hinged with diamond plate door. Includes (2) push-button latches and (2) hold opens. Lower pump panel Escutchion plate to be vertically hinged forward. Panel to be secured in the closed position with push button latches.	$672
3134-0093	Top mounted pump operator control panel to be painted Zolatone gray. eMAX only.	$315
3134-0094	Top mounted pump operator control panel to be painted Zolatone black. eMAX only.	$315
3134-0095	The upper gauge panel on the enclosed pump panel is to be hinged forward. Side mount eMAX only.	$131
3134-0103	The pump operator's pump panel and rear main pump panels are to be painted Zolatone black.	$611
3134-0104	Officer side upper pump access panel behind crosslays to be horizontally hinged with stainless steel door. Includes (2) push button latches and (2) hold open devices.	$204
3134-0106	Officer side pump panel escutchion plate shall be around each discharge, and pump intakes.	$171
3134-0107	The TM control panel to be stainless steel. The driver and officer side pump panels are to be painted Zolatone black.	$785
3134-0108	Booster reel rewind switch. Switch guarded half moon. Location on driver side upper pump display panel.	$28
3134-0112	Side control pump enclosure structure and panels to be modified as necessary to provide the lowest practical crosslay floor height from the ground.	$1,277
3134-0113	Officer side upper pump access panel to be horizontally hinged with aluminum smooth plate door painted Zolatone black both sides. Includes (2) push button latches and (2) hold open devices.	$243
3134-0114	Driver and officer side mount pump panels are to be stainless steel with gray Zolatone finish.	$611
3134-0117	The main rear pump panel to be vertically hinged along officer side. Includes push-button latches and gas spring(s) mounted in place to hold open.	$565
3134-0118	Rear Mount pump access doors (2) lift-up doors, (1) each side. Includes (1) center slam strip reinforced, (2) push button latches each side and (2) hold open devices each side. Doors to be [#LOC]. Doors to open to 90 degrees and includes pull strap for access from ground.	$468
3134-0121	The side pump intake / discharge panels to be painted Zolatone black. SS eMAX only.	$368
3134-0122	Pump operator control panel in driver side forward body compartment to be painted Zolatone black. SS eMAX only.	$467
3134-0123	Top mounted pump operator control panel to be painted Zolatone black. SS eMAX only.	$384
3134-0126	The top mount control panel and the driver and officer side pump panels are to be stainless steel. The top panel shall be finished with black Zolatone. The side panels shall remain stainless steel finish.	$785
3134-0127	Driver and officer side mount pump panels are to be stainless steel with black Zolatone finish. Includes brushed suction and discharge bezels (not coated). Includes T bar and trim.	$577
3134-0129	Driver side mount pump panel to be stainless steel with black Zolatone finish. Includes black suction and discharge escutcheon plates.	$306
3134-0130	Zoloatone escutcheon plate under each (4) foam control handles. Hole diameter shall be as tight as possible to handle shaft size.	$227
3134-0131	Driver and Officer side upper pump access panels to be horizontally hinged with stainless steel doors. Includes (2) D-ring latches and (2) hold opens for each.	$656
3134-0133	Driver and officer side upper pump access panels to be horizontal hinged with stainless steel doors. Includes (2) push-button latches and (2) hold opens for each.	$406
3134-0134	Officer side upper pump access panel to be horizontally hinged with smooth plate door painted Zolatone to match lower panels. Includes (2) push button latches and (2) hold open devices.	$204

3134-0135	Driver and officer side upper pump access panels to be horizontally hinged with smooth plate door painted Zolatone to match lower panels. Includes (2) push button latches and (2) hold opens for each.	$406
3134-0136	The side upper module panels/ access smooth plate doors to be painted Zolatone black. eMAX only.	$302
3134-0137	The upper gauge panel is to be hinged forward. Includes (2) push-button latches.	$127
3134-0139	Hinge Pump Panel shall be reinforce with a stiffener mounted on each hinge panel.	$106
3134-0141	Rear Mount pump access door. Includes (2) D-ring latches and (2) hold open devices. Door to be [#LOC]. Door to open to 90 degrees and includes pull strap for access from ground. D-ring latch to utilize a slot in extrusion or to latch behind extrusion to secure without angle latch catch.	$541
3134-0142	Pump panel support angles. Locate up to (3) horizontal mounted as required on interior side of the main vertically hinged pump panel(s).(Bolt on support).	$148
3134-0147	Driver and officer side mount pump panels are to be stainless steel with black Zolatone finish.	$578
3136-0000	Air horn switch at pump panel. Switch to be labeled "Evacuation Alert". Location: [#LOC].	$135
3136-0001	Backboard storage compartment in pump module. Locate rearward of crosslays on SM and forward of crosslays on TM. Includes vertical hinged diamond plate access door each side.	$997
3136-0002	Microphone box. Locate at the [#LOC].	$477
3136-0003	Microphone box, Cast Products. Locate at/in the [#LOC].	$445
3136-0004	The lower area of the pump compartment to have a four (4) sided heat pan with two (2) removable (side to side) bottoms. Bottoms to be secured in the closed position with mechanical fasteners.	$969
3136-0005	The crosslay divider(s) to be notched both ends for Task Force Nozzle.	$118
3136-0006	Two (2) pump compartment heaters are to be mounted in the pump area. Locate as low as possible.	$1,575
3136-0007	Two (2) FRC Mansaver bars, (1) each side. Installed at pump module crosswalk area. The bars are to include [#COL] vinyl covers.	$1,219
3136-0010	Stainless steel roller assemblies for crosslays and/or speedlays.	$281
3136-0011	P-Rubber in flex joint(s) between pump module and/or body modules.	$577
3136-0012	Slat flooring. The crosslay and/or speedlays are to have removable slat flooring.	$356
3136-0013	Additional Booster Reel Roller Assembly. Locate opposite side of booster reel.	$234
3136-0015	(2) vertical mounted booster reel spool guide roller assemblies. Locate (1) each side on trailing edge of beavertails/body (as applicable). For use with rear compartment mounted booster reel or similar.	$463
3136-0016	Speedlay module trays mounted to a bi-directional Slide Master tray.	$1,177
3136-0017	Driver side pump enclosure. The driver side lower pump module to be full width and full depth of the module and include area in upper section for mounting of roll-up door.	$2,936
3136-0018	Officer side pump enclosure. The officer side lower pump module to be full width and full depth of the module and include area in upper section for mounting of roll-up door.	$2,936
3136-0020	Air horn switch at pump panel. Switch to be labeled EMERGENCY EVACUATION. Label to have red back ground with white letters. Location: [#LOC].	$139
3136-0023	Microphone Box Cast Products. Locate at/in the [#LOC].	$472
3136-0024	Crosslays to accomadate extra capacity.	$509
3136-0025	Microphone box. Dimensions for microphone box are 14" wide x 6.5" high x 5.5" deep. Locate at the [#LOC].	$523
3136-0026	The crosslay divider(s) to have a hand hold cutout on outboard edge each side of divider(s).	$246
3136-0029	Air horn switch at pump panel. Switch to be labeled "Air Horn". Location: [#LOC].	$135
3136-0030	Diamond plate cover for Vogel Auto Lube System. Cover to have cut-outs for checking system fluid levels. Location: driver's side of dunnage pan.	$149
3136-0031	Removable Speedlay Tray(s). The floor of the tray(s) to be slotted to prevent the accumulation of water and allow for ventilation of wet hose.	$580
3136-0033	Crosslay divider(s) to be lowered approx 5" to provide room for bail handled nozzle(s) below cover.	$118
3136-0034	Microphone box 10W X 6H X 11D located on pump operator panel.	$542
3136-0037	Top mount walkway compartments. Includes spring mounted hinged doors with push button latch. Each compartment includes (1) incandescent light and wired to door adjar indicator.	$867
3136-0042	Stainless steel roller assemblies for crosslays and/or speedlays. Rollers on side extrusions only and scuff plates on bottom extrusions.	$732
3136-0043	Cut-out for Booster Reel. Through upper panel on pump module and dunnage pan. Cut-out to be approx. 14" wide x 6" high for visibility of booster reel. Location(s): Driver and officer side upper pump module.	$173
3136-0044	Pump panel compartments with push button latch. Locate (1) driver side pump panel and (1) officer side pump panel. Compartments to be located in lower forward corner of pump panels. Compartments to be approx. 14" wide x 14" high x 14" deep.	$1,779
3136-0045	Microphone Box Cast Products. Locate at/in the [#LOC].	$472
3136-0049	Deckgun to be located offset to the driver side of the dunnage storage pan.	$640
3136-0050	Extreme weather heat pan plates. Includes interior module area mounted plates for increasing the lower heat pan (forward and rearward) into the lower area of the module for increased heat retaining.	$414
3136-0051	Air horn switch at pump panel. Switch to be labeled "Code Red". Location: [#LOC].	$135
3136-0053	Microphone box. Locate at the [#LOC]. Microphone box to be 9"W x 11"H x 6.5"D.	$595
3136-0054	Deckgun to be located offset to the driver side of the dunnage storage pan. Deckgun piping to be recessed as low as possible for use with Akron Apollo Hi-Riser #3431	$640
3136-0055	The speedlay divider(s) to be held 12" short both ends for Nozzles.	$369
3136-0056	The crosslay divider(s) to be held 12" short both ends.	$388

3136-0057	Notched crosslay divider(s) extended both ends to 4" above the floor of the crosslay.	$335
3136-0059	Speedlay module tray(s) mounted to a directional SlideMaster tray. SlideMaster to have 100% extension to one side.	$1,352
3136-0061	Heat pan removable bottoms to have screws and nuts in place of butterfly latches.	$263
3136-0062	Crosslay divider(s) to be adjustable front to rear.	$915
3136-0064	Heat pan. The lower area of the pump compartment to have a four (4) sided heat pan with two (2) removable (side to side) bottoms. Bottoms to be secured in the closed position with butterfly latches.	$969
3136-0066	Microphone box. Dimensions for microphone box are 12.5" wide x 8" high x 6" deep. Locate at the [#LOC].	$523
3136-0067	DEF Tank mounting provision in right side of pump compt. Includes tank supports, heat shield and tank fill access either through pump access door or separate door as applicable.	$346
3136-0069	Speedlay module tray(s) mounted to a directional Slide Master tray. Slide Master to have 100% extension to the officer side.	$1,352
3136-0070	Stainless steel scuff plate assemblies for speedlays. Scuff plates to be on top, bottom and sides of each opening.	$732
3136-0071	Microphone Box Cast Products. Locate at/in the [#LOC].	$445
3136-0073	Removable Poly Speedlay Tray(s). The floor of the tray(s) to be slotted to prevent the accumulation of water and allow for ventilation of wet hose.	$532
3136-0074	Stainless steel scuff plates for crosslays and/or speedlays.	$326
3136-0076	Pump module mounted 3 sided light tower shield with approx 28 degree side slope to the driver side. The shield to be even with top of the body and painted job color.	$1,145
3136-0078	Top mount walkway compartments. Includes spring mounted hinged doors with push button latch. Each compartment includes (1) LED light and wired to door adjar indicator.	$867
3136-0079	Q2B switch at pump panel. Switch to be labeled "Evacuation Alert". Location: [#LOC].	$135
3136-0080	Compartment below the top mount walkway to be labeled "SHOVELS" on each door.	$54
3136-0081	A pump compartment heater with 110V blower to be mounted in the pump area.	$1,228
3136-0083	Removable Poly Speedlay Tray. The floor will be notched for the preconnect swivel to be positioned as required with the tray in the stowed position. The floor of the tray(s) to be slotted to prevent the accumulation of water and allow for ventilation of wet hose.	$532
3136-0085	Cast Products EB0010-1-A microphone box. Locate on driver side pump panel. Hinge door to the right.	$513
3136-0086	Notched crosslay divider(s) on both ends for preconnect line(s) nozzle end storage with NFPA cover(s) in closed position. Additional 45 degree angle notch on inside edge on each side. Crosslay divider(s) to be held 1" short below crosslay cover.	$289
3136-0087	Aluminum splash guard over top of hydraulic pump for cab tilt.	$183
3136-0088	Captive booster reel rollers mounted through panel/module. Locate to booster reel side and size for width of reel assembly.	$383
3136-0090	Speedlay tray - removable. Tray includes a 1.25" extruded alum handle low on each end of tray and slots down each side to facilitate lifting. The floor of the tray shall have poly slides and be slotted to prevent the accumulation of water and allow for ventilation of wet hose.	$580
3136-0091	Vertically hinged access door with push button latch for cord reel in driver side of dunnage pan. Includes cut-out in dunnage pan for access to cord reel rollers. Mount junction box to inside of access door.	$454
3136-0096	Stainless steel roller assemblies for crosslays. Includes handrail the width of the crosslays in place of bottom roller.	$407
3136-0098	Microphone box. Dimensions for microphone box are 12" wide x 12" high x 6" deep. Locate at the [#LOC].	$541
3136-0099	Captive booster reel rollers. (1) mounted through dunnage pan floor inboard of booster reel and (1) thru pump access door. Locate to booster reel side and size for width of reel assembly.	$383
3136-0100	Notched Speedlay divider(s) on the both for connecting preconnect hoses. Notch to be 12"L X 4"H enough room to use a spanner wincher for connecting hoses.	$91
3136-0102	Booster Reel Riser for rollers. Locate with officer side dunnage pan rollers.	$86
3136-0103	Booster Reel Riser for rollers. Locate with driver side dunnage pan rollers.	$86
3136-0107	Microphone box. Locate at the [#LOC]. Microphone box to be 9"W x 11"H x 8"D. Locate Pump operator panel.	$595
3136-0108	(2) vertically mounted booster reel spool guide roller assemblies. Locate (1) each side inside rear body compartment opening. For use with rear compartment mounted booster reel.	$463
3136-0109	Removable Poly Box(s). Box to be located in lower transverse storage area (one each side), approx. 15" high x 14" wide x 34" deep. The floor of the box(es) to be slotted to prevent the accumulation of water and allow for ventilation of wet hose.	$532
3136-0110	Captive booster reel rollers mounted through panel/module. Locate to booster reel side and size for width of reel assembly.	$383
3136-0111	Microphone box. Dimensions for microphone box are 8" wide x 12" high x 6" deep. Locate at the [#LOC].	$523
3136-0114	The running board(s) to be notched for Pistion Intake Valve. Location(s): [#LOC].	$449
3136-0115	The lower area of the pump compartment to have a four (4) sided heat pan with two (2) removable (side to side) bottoms. Lower section of pan designed to provide the maximum amount of ground clearance. Bottoms to be secured in the closed position with butterfly latches.	$969
3136-0116	DEF Tank mounting provision in left side pump compt to the rear of the pump. Includes tank supports and tank fill access door.	$306
3136-0117	P-Rubber in flex joint(s) between pump module and/or body modules. Horizontal across tops and along sides at flex joint(s).	$577

3136-0118	A two (2) piece aluminum pan shall be bolted in place below the pump controls within the pump module. This pan shall utilize .090 aluminum plate to provide a shield to reduce heat loss as the pump controls exit the pump module for the top mount control panel.	$251
3136-0120	Captive booster reel rollers mounted on booster reel assembly. Rollers sized for width of reel assembly.	$383
3136-0121	Speedlay tray - Polypropylene - removable. Tray includes pull out grab handle (poly dowel) down low on each end to facilitate lifting. The trays shall be made from Polypropylene, the floor of the tray shall be slotted to prevent the accumulation of water and allow for ventilation of wet hose.	$823
3136-0122	Commercial chassis requires 3" additional to cab and body gap due to exhaust requirements.	$325
3136-0126	Microphone box. Dimensions for microphone box are 7.5" wide x 15" high x 11" deep. Locate at the [#LOC].	$523
3136-0127	The pump module storage pan shall be upgraded to include a hinged cover. The hinged cover shall be constructed of 3/16" embossed aluminum tread plate, include a grab handle, (2) butterfly latches and hold open device(s). The cover shall be included in the door ajar circuit and may be used a walking surface.	$494
3136-0129	Horizontally hinged access door with D-ring latch for access to officer side of dunnage pan. Includes cut-out in dunnage pan.	$454
3136-0130	Speedlay tray - Polypropylene - removable. Tray includes pull out grab handle (poly dowel) down low on each end to facilitate lifting. The tray(s) shall be sized approximately 18" H X 10" W. The tray(s) shall be made from Polypropylene, the floor of the tray shall be slotted to prevent the accumulation of water and allow for ventilation of wet hose.	$823
3136-0133	Removable Poly Speedlay Tray(s). The floor of the tray(s) to be slotted to prevent the accumulation of water and allow for ventilation of wet hose.	$532
3136-0135	Removable Poly Speedlay Tray(s). The floor of the tray(s) to be slotted to prevent the accumulation of water and allow for ventilation of wet hose. Trays will be equipped with a handle each side to assist in removing from speedlay storage area.	$532
3136-0136	Removable speedlay tray(s). The floor of the tray(s) shall be sloped from a raised position in the middle slanted downward towards each end. Additionally the floors shall be slotted to prevent the accumulation of water and allow for ventilation of wet hose. There shall be slotted hand holds on each side of the tray (IPO grab handles on each end).	$709
3136-0137	All drains within the pump module shall be bundled together to exit the heat pan as a bundle beneath the pump, rather than separately.	$198
3136-0138	Pump module storage pan.	$731
3136-0139	Crosslay double 7.5" wide each to hold up to 200' of 2.0" DJ hose (each).	$717
3136-0140	Crosslay double 7.5" wide each with extra depth to hold up to 400' of 2.0" DJ hose (each).	$883
3136-0141	Crosslay double 4.25" wide single stack to hold up to 200' of 2.0" DJ (each).	$857
3136-0142	Crosslay triple 4.25/4.25/5" wide single stack to hold up to 200' of 2.0" DJ (each) in front lays and 150'-200' 2.5" DJ hose in rear lay.	$1,271
3136-0144	Crosslay single 5" wide single stack to hold up to 200' of 2.0" DJ or 150'-200' 2.5" DJ hose.	$475
3136-0145	Insulation - front pump compartment access door.	$102
3136-0146	Compartments for TM walkway (PR). Includes hinged door each side with push button latch and LED compartment light. Requires TM pump module with walkway.	$713
3136-0149	A removable .187" aluminum treadplate cover panel shall be installed at the front of the speedlay module, adjacent to the crosswalk assembly. Panel shall be secured with lift & turn latches for quick removal and for accessibly for hose loading. SS Product only.	$372
3136-0151	Microphone box. Dimensions for microphone box are 12" wide x 12" high x 6" deep. Locate at the driver side pump panel. With hold open device.	$639
3136-0152	Air horn switch at pump panel. Switch to be labeled "Evacuation Alert" with a 4" x 2.5" orange backing plate.	$184
3136-0153	(2) vertically mounted booster reel spool guide roller assemblies. Locate (1) each side on trailing edge of body 3x3 down low.	$463
3136-0154	Enclosed transverse compartment above pump gauge panel. Approximately 24" H x 15" W x 76" L. Includes vertically hinged SS doors each side and D-ring latch with gas tube hold opens, and the top of the compartment will be embossed aluminum treadplate.	$1,685
3136-0157	Stainless steel scuff plates for speedlays. Includes full height of exterior extrusion to lower tool compartment.	$302
3136-0158	Upper and/or lower speedlay tray 8.5" interior width. - removable. Tray includes a 1.25" extruded alum handle low on each end of tray and slots down each side to facilitate lifting. The floor of the tray shall have poly slides and be slotted to prevent the accumulation of water and allow for ventilation of wet hose.	$580
3136-0162	Hi Rise tray - removable. Tray includes a 1.25" extruded alum handle low on each end of tray and slots down each side to facilitate lifting. The floor of the tray shall have poly slides and be slotted to prevent the accumulation of water and allow for ventilation of wet hose.	$580
3136-0164	Stainless steel scuff plate assemblies for speedlays & crosslays. Scuff plates to be on top, bottom and sides of each opening mechanically fastened with screws.	$1,123
3136-0165	Microphone box. Dimensions for microphone box are 14" wide x 6" high x 6" deep. Locate at the pump operator panel.	$523
3136-0166	Removable Speedlay Tray(s). The floor of the tray(s) to be slotted to prevent the accumulation of water and allow for ventilation of wet hose. The side walls of tray(s) to be approx same height with slots down each side to facilitate lifting. This tray should be used with Taller Speedlay opening.	$580
3136-0178	Microphone box. Dimensions for microphone box are 14" wide x 5" high x aprox 6" deep. Locate at the the right side of the top mount gauge panel. SS top mount product only	$546

3136-0179	Recessed area in storage pan for deck gun to be as low as practical. Deck gun connection to terminate 3" below top of pump module.	$607
3136-0180	Crosslay triple 4.25/4.25/4.25" wide single stack to hold up to 200' of 2.0" DJ in each hose lay.	$1,271
3136-0181	Speedlay tray - removable - extra length for full width module. Tray to be 14W x 9H x Full width of module. Tray includes a 1.25" extruded alum handle on each end of tray and slots down each side to facilitate lifting. The floor of the tray shall have poly slides and be slotted to prevent the accumulation of water and allow for ventilation of wet hose.	$668
3136-0182	Crosslay double 6.25" wide single stack to hold up to 200' of 2.0" DJ (each).	$857
3136-0183	Backboard/pike pole storage compartment located to rear of crosslays. Includes partition between backboard and pike poles and vertically hinged diamond plate access door each side. Note pike poles will only be accessible from driver side and longest pike pole that compartment will accommodate is 6'.	$1,147
3136-0184	Crosslay double 5.5" wide single stack to hold up to 200' of 2.0" DJ (each).	$857
3136-0185	Extra Capacity Removable Poly Speedlay Tray(s). Tray(s) to be approx 8.25" wide inside X 17.50" high inside. The floor of the tray(s) to be slotted to prevent the accumulation of water and allow for ventilation of wet hose.	$532
3200-0054	Heater rear walk-in area. Locate under bench seat in the body interior.	$1,579
3300-0007	Door single vertical hinged painted. Location(s): [#LOC]	$716
3300-0008	Door double vertical hinged painted. Location(s): [#LOC].	$796
3300-0009	Door single vertical hinged diamond plate. Location(s): [#LOC]	$501
3300-0010	Door double vertical hinged diamond plate. Location(s): [#LOC].	$716
3300-0011	Door single horizontal hinged lift-up box pan configuration painted. Location(s): [#LOC]	$696
3300-0012	Door single horizontal hinged lift-up box pan configuration diamond plate. Location(s): [#LOC]	$540
3300-0013	Door roll up short (up to 45") with satin finish POK. Location(s): [#LOC]	$721
3300-0014	Door roll up tall (greater than 45") with satin finish POK. Location(s): [#LOC]	$1,032
3300-0015	Door roll up short (up to 45") with painted finish POK. Location(s): [#LOC]	$1,154
3300-0016	Door roll up tall (greater than 45") with painted finish POK. Location(s): [#LOC]	$1,462
3300-0017	Door roll up short (up to 45") with satin finish ROM. Location(s): [#LOC].	$803
3300-0019	Door roll up tall (greater than 45") with satin finish ROM. Location(s): [#LOC].	$1,145
3300-0021	Door roll up short (up to 45") with painted finish ROM. Location(s): [#LOC].	$1,360
3300-0022	Door roll up tall (greater than 45") with painted finish ROM. Location(s): [#LOC].	$1,702
3300-0023	Door single stainless steel vertical hinged painted. Location(s): [#LOC]	$896
3300-0024	Door double stainless steel vertical hinged painted. Location(s): [#LOC]	$915
3300-0025	Door single horizontal hinged drop down painted. Location(s): [#LOC]. Door(s) will have chain hold open devices.	$574
3300-0026	Door single stainless steel horizontal hinged drop down painted. Location(s): [#LOC]	$716
3300-0027	Door bi-fold horizontal hinged diamond plate. Location(s): [#LOC]. Includes upper door mounted guide roller assembly and the lower door will have chains for side or upper rear body mount or bumper style for lower rear body mounted.	$796
3300-0028	Door tri-fold vertical hinged diamond plate. Location(s): [#LOC]	$1,083
3300-0029	Door single stainless steel horizontal hinged lift-up painted. Location(s): [#LOC]	$917
3300-0030	Door double 3-point vertical hinged painted. Location(s): [#LOC]	$1,588
3300-0062	Keyed compartment door latch with #1250 key. Location(s): [#LOC].	$76
3300-0063	Keyed roll-up compartment door with #1250 key. Location(s): [#LOC].	$134
3300-0064	All apparatus doors, body and chassis, are to be keyed alike. Not avail on Commercial Chassis. Requires keyed latch option to be included in shop order.	$296
3300-0065	Electric lock for an ROM roll-up door (EA). The door to lock on both sides of compartment as applicable. Includes manual J236 key lock. Location(s): [#LOC]	$589
3300-0066	Drip pan for a ROM roll-up door (EA). Location(s): [#LOC].	$162
3300-0076	Door double 3-point vertical hinged painted. Location(s): [#LOC]	$1,157
3300-0078	Cleveland door springs provided for all vertical hinged body doors.	$147
3300-0080	Stainless steel interior body door overlay. Each hinged body door interior surface to have a stainless steel overlay. Overlay to fit around any surface mounted items on the door.	$2,981
3300-0081	Keyed compartment door latch (Best Lock). Location(s): [#LOC]	$194
3300-0092	Door double 3-point vertical hinged diamond plate. Location(s): [#LOC].	$1,531
3300-0096	Keyed roll-up compartment door with #J236 key. Location(s): [#LOC]	$134
3300-0097	Keyed compartment door latch with #J236 key. Location(s): [#LOC]	$76
3300-0098	Roll-up door package Amdor. Includes (2) short satin roll-up doors and (4) tall satin roll-up doors. Door pennant plates to be mounted offset forward of the compartment for better contact of external door slats to header plate brush.	$7,770
3300-0099	Intergrated sill plate. Water Dam type door sill for ROM rollup door. Location(s):[#LOC]	$138
3300-0100	Cleveland door springs provided for vertical hinged body door(s). Locate [#LOC].	$147
3300-0102	Polished stainless steel interior body door overlay. Each hinged body door interior surface to have a polished stainless steel overlay. Overlay to fit around any surface mounted items on the door.	$4,472
3300-0103	Door double vertical hinged smooth plate sanded. Location(s): [#LOC].	$796
3300-0104	Keyed compartment Tri-Mark model 030-1300 door locking latch with (2) TM-700 keys. Location: [#LOC].	$153
3300-0105	Door roll up tall (greater than 45") with satin finish Amdor. Location(s): [#LOC].	$1,496
3300-0106	Door roll up short (up to 45") with satin finish Amdor. Location(s): [#LOC].	$1,071
3300-0107	Pull down straps for lift-up door. Loc: [#LOC].	$100
3300-0119	Door single vertical hinged smooth plate sanded. Location(s): [#LOC].	$716
3300-0120	Electric lock for a ROM roll-up door (EA). The door to lock on both sides of compartment as applicable. Includes manual 1250 key lock. Location(s): [#LOC]	$589

3300-0128	Electric locking D-Ring latch. Includes manual key override. Switch for door to be located below rear intermedite step. Switch to be located out of view while standing at rear of unit. Locate on B1.	$384
3300-0129	Door bi-fold horizontal hinged smooth plate sanded. Location(s): [#LOC].	$866
3300-0130	Door single horizontal hinged drop-down painted. Includes body mounted stops to support the door in the open position. Location(s): [#LOC].	$574
3300-0131	Door bi-fold horizontal hinged painted. Location(s): [#LOC]. Includes upper door mounted guide roller assembly and the lower door will have chains for side or upper rear body mount or bumper style for lower rear body mounted.	$987
3300-0132	Door to be notched for LDH hose. Notch on driver side to be approximately 5.75"W x 3.75"H and notch on officer side door to be approximately 10"W x 3.75"H. Location: B1 door.	$286
3300-0133	Door single horizontal hinged drop-down sanded smooth plate. Location(s): [#LOC].	$456
3300-0134	Door single horizontal hinged lift-up box pan configuration painted. Includes double D-rings due to width of the door. Location(s): [#LOC]	$696
3300-0135	Door double 3-point vertical hinged smooth plate sanded. Location(s): [#LOC].	$1,588
3300-0137	Stainless steel interior door overlay for R2. Overlay to fit around any surface mounted items on the door.	$664
3300-0138	Keyed compartment door latch with #CH751 key. Location(s): [#LOC]	$76
3300-0139	Door double 3-point horizontal hinged painted. Location(s): [#LOC]. Lower door should act as an exterior writing surface, w/ adjustable angles. The paddle latch on the second door shall not protrude past the edge of the door.	$1,588
3300-0140	Door single horizontal hinged drop down diamond plate. Location(s): [#LOC].	$432
3300-0141	Tri-Mark door latch. Location(s): [#LOC].	$77
3300-0142	Stainless steel door single vertical hinged painted. Location(s): [#LOC].	$716
3300-0143	Stainless steel short doors double vertical hinged painted. Location(s): [#LOC].	$796
3300-0144	Stainless steel door horizontal hinged lift-up painted. Location(s): [#LOC].	$696
3300-0145	Stainless steel door single horizontal hinged drop-down, painted. Location(s): [#LOC].	$574
3300-0146	Stainless steel tall doors double 3-point vertical hinged painted. Location(s): [#LOC].	$1,588
3300-0147	Stainless steel short doors double 3-point vertical hinged painted. Location(s): [#LOC].	$1,157
3300-0148	Stainless steel door single vertical hinged brushed, unpainted. Location(s): [#LOC].	$716
3300-0151	Drip pan with drain for a ROM roll-up door (EA). Location(s): [#LOC].	$208
3300-0164	Door double vertical hinged w/rotary latches - painted . Location(s): [#LOC]	$796
3300-0165	Door double vertical hinged w/rotary latches - smooth plate sanded. Location(s): [#LOC].	$796
3300-0166	Door double vertical hinged w/rotary latches - diamond plate. Location(s): [#LOC]	$716
3300-0167	Door double 3-point vertical hinged w/rotary latches - painted. Location(s): [#LOC]	$1,588
3300-0168	Door double 3-point vertical hinged w/rotary latches - painted. For use with compartments up to 50" high. Location(s): [#LOC].	$1,157
3300-0169	Door double 3-point vertical hinged w/rotary latches - smooth plate sanded. Location(s): [#LOC]	$1,588
3300-0174	Keyed roll-up compartment door with #CH751 key. Location(s): [#LOC].	$134
3300-0175	Door roll up short (up to 45") with satin finish Gortite. Location(s): L2 and R2.	$1,029
3300-0176	Door roll up tall (greater to 45") with satin finish Gortite. Location(s): L1/R1/L3/R3 and B1.	$1,204
3300-0177	Door single horizontal hinged drop down painted. Door will have 2 D-ring handles. Location(s): [#LOC].	$742
3300-0188	Drip pan (E-ONE style) for a roll-up door (EA). Location(s): [#LOC].	$183
3300-0191	First closed door of double door compartment to have top and bottom latches (Each).	$225
3300-0192	Polished stainless steel overlay on all double pan door's inner pan on body. 95 mid-mount aerial only. Overlay will be full height and should go around latch, gas shock castings and lock cover.	$1,919
3300-0195	Door roll up tall (greater than 45") with painted finish Amdor. Location(s):[#LOC].	$2,029
3300-0196	Door double vertical hinged painted, includes (2) gas shock-style hold-open device IPOS. Location(s): [#LOC].	$858
3300-0197	Door roll up short (up to 45") with painted finish Amdor. Location(s): [#LOC].	$1,801
3300-0202	Door single horizontal hinged drop-down sanded smooth plate. Location(s): [#LOC].	$456
3300-0203	Door to be notched for 4" LDH hose. Notch to be 8.5" W x 3.75" H. Location: top of B1 driver side door. This door is to be the "first opened" door as shown on drawing.	$286
3300-0204	Door to be notched for 5" LDH hose. Notch to be approximately 8"W x 2.5 "H. Location: top of B1 officer side door.	$286
3300-0205	3-Point latch double doors to have latch brackets installed with "PULL" tags.	$562
3300-0206	Additional roll up door stop latches shall be mounted for B1 at a raised location aligned with the bottom of the ladder tunnel. The raised latches/hooks shall not be included as part the door ajar circuit.	$70
3300-0207	Door bi-fold horizontal hinged smooth plate sanded. Location(s): [#LOC]. Includes upper door mounted guide roller assembly and the lower door will have chains for side or upper rear body mount or bumper style for lower rear body mounted.	$970
3300-0210	Door to be notched for 4" LDH hose. Notch to be 8.5" W x 3.75" H. Location: top of B1 officer side door. This door is to be the "first closed" door as shown on drawing.	$286
3300-0211	Door to be notched for 3" DJ hose. Notch to be 5" W x 1" H. Location: top of B2 officer side door. This door is to be the "first opened" door as shown on drawing.	$286
3300-0212	Keyed compartment Tri-Mark model 030-1300 door locking latch with (2) 1250 keys. Location: [#LOC].	$153
3300-0215	Additional roll up door stop latches (PR) shall be mounted at a raised location aligned with the reduced depth transition area. The raised latches/hooks shall not be included as part the door ajar circuit. Location(s): [#LOC].	$70
3300-0219	Install dealer supplied roll up doors. The roll up doors for location(s): [#LOC]. shall be dealer supplied. These door kit(s) as supplied will be complete and correct for compartment(s) specified. E-ONE manufacturing shall install these dealer supplied ROM roll up door(s).	$224

3300-0220	Reverse hinge single compartment door. Includes vertical mounted drip rail along forward area of compartment opening (in addition to the horizontal drip rail above the door opening). Location(s): [#LOC].	$149
3300-0222	Double door to have latch handle extension installed on secondary door's interior latch with "PULL" tags. Location(s): [#LOC]	$57
3300-0224	Pull down straps for ROM roll-up door ipo rope. Location(s): [#LOC].	$33
3300-0226	Drip pan diamond plate with end plates(E-ONE style) for a roll-up door with drain hose. Location(s): [#LOC].	$324
3300-0228	Door double 3-point vertical hinged w/rotary latches - painted. Location: [#LOC]. D-ring primary door located rearward ipo standard. Door double 3-point vertical hinged w/rotary latches - painted.	$1,588
3300-0231	Door roll up tall (greater to 45") with satin finish Gortite. Location(s):[#LOC].	$1,204
3300-0234	Door single vertical hinged painted EOD USAF. Location(s): [#LOC]	$716
3300-0235	Door single horizontal hinged drop down painted. EOD USAF. Location(s): [#LOC]. Door(s) will have chain hold open devices.	$574
3300-0236	Door double vertical hinged - painted. EOD USAF. Location(s): [#LOC]	$796
3300-0238	Door single horizontal hinged lift-up box pan configuration painted. EOD USAF. Location(s): [#LOC]	$696
3300-0239	Door single vertical hinged painted with the hinge reversed so the door open opposite of standard. Location(s): [#LOC]	$716
3300-0247	Door horizontaly hinged without pan drop down smooth plate sanded. Single point D-Ring latch. Includes (2) hose notches on opening end. Left side notch for 5" LDH and right side for 3" DJ. Location: B2	$506
3300-0248	There shall be single piece compartment door drip rail provided over L1/L2, L5/L6, R1/R2 & R4/R5. Only available with (2) consecutive compartments with like doors.	$192
3305-0000	Diamond plate generator cover.	$965
3305-0002	Bi-Fold diamond plate cover for the crosslay area. Includes applicable grab handles and (2) hold downs. Non-aerial applications to be tagged as a non-stepping surface.	$846
3305-0003	Single diamond plate cover for the crosslay area. Includes applicable grab handle(s) and (2) hold downs. Non-aerial applications to be tagged as a non-stepping surface.	$572
3305-0006	All hand rails (as applicable) are to have a rubber insert. Includes cab (N/A on commercial chassis), pump module and body.	$1,709
3305-0007	Vinyl [#COL] hose bed cover with attached rear flap(s).	$824
3305-0008	Vinyl [#COL] crosslay cover with attached side flaps.	$290
3305-0009	Compartment underbody with slide-out tray.(**Obsolete** See Sales code 3380-0078) Includes drop down front door with push button latch(es). [#LOC]	$1,836
3305-0010	Compartment underbody. Includes drop down front door with push-button latches. Locate [#LOC].	$1,193
3305-0011	(2) piece aluminum hose bed cover with smooth bottom plate. Includes center hose bed divider with notched rear (as applicable), fill tower(s) access door(s) (as applicable), gas shocks, positive hold opens/hold closed at rear, (2) grab handles front and (2) hand rails rear.	$3,183
3305-0012	(4) piece aluminum hosebed cover. Includes center hosebed divider with notched rear, fill tower(s) access door(s) (as applicable), (2) gas shocks, positive hold-opens/hold-closed at center and at the rear, (6) grab handles- (4) fwd cover and (2) fwd area of rear cover with (2) handrails on rear cover.	$5,682
3305-0013	(2) piece aluminum hose bed cover with smooth bottom plate. Includes dividerless cross structure, fill tower(s) access door(s) (as applicable), (2) gas shocks, positive hold-opens/hold-closed at the rear, (2) grab handles (fwd) and (2) hand rails (rear).	$3,289
3305-0014	(4) piece aluminum hosebed cover. Includes divider-less cross structure, fill tower(s) access door(s) (as applicable), (2) gas shocks, positive hold-opens/hold-closed at center and at the rear, (6) grab handles- (4) fwd cover and (2) fwd area of rear cover with (2) handrails rear of each cover.	$5,972
3305-0015	Vinyl [#COL] speedlay front cover.	$227
3305-0016	Vinyl [#COL] speedlay side covers.	$193
3305-0017	Nylon black strap on running board suction tray (EA). Location: [#LOC].	$76
3305-0021	Vinyl [#COL] hose bed cover with side bungee cords and attached rear flap(s).	$1,147
3305-0022	Vinyl rear cover for diamond plate hose bed cover. Color: [#COL].	$256
3305-0023	Nylon black cargo net at rear of diamond plate or vinyl hose bed cover or similar.	$537
3305-0024	Vinyl [#COL] side covers for diamond plate crosslay cover.	$181
3305-0025	Nylon black cargo net on sides for crosslay cover.	$214
3305-0026	Nylon black cargo net on front of speedlay.	$339
3305-0027	Nylon black cargo net on sides of speedlay.	$249
3305-0028	Vinyl [#COL] cover for running board suction tray. Location: [#LOC].	$181
3305-0029	Nylon black strap on running board suction tray (EA). For use with rolled hose. Location: [#LOC]	$87
3305-0031	(4) piece aluminum low profile dividerless hosebed cover.The hosebed cover to include gas shocks, low pro-file positive hold opens at rear, (2) grab handles- frt and (2) handrails -rear.	$4,426
3305-0032	Cover for side ladder tunnel. To include mounting bracket over upper ladders in pump module and black vinyl cover. Cover to be removable for access to pump area.	$385
3305-0033	Vinyl access cover for fill tower(s).	$190
3305-0034	Vinyl [#COL] hose bed cover without attached rear flap(s). Requires rear cover option.	$698
3305-0035	Diamond plate hosebed deflector. Located at front of hosebed area with angled front edge. To be hinged along forward edge with "T" style hold-downs. To cover all fill towers. The NFPA hosebed light (as applicable) to be located on trailing edge.	$487

3305-0036	TM control panel [#COL] vinyl cover. Includes lower twist locks and velcro front, side and top securing.	$381
3305-0037	Diamond plate generator cover with expanded metal on top and all (4) sides.	$965
3305-0038	Vinyl [#COL] crosslay cover top only.	$246
3305-0039	Diamond plate speedlay cover. Includes fixed rear portion on rear of module (over backboard storage area, if applicable) and hold-open with grab handles on forward area.	$621
3305-0040	Nylon black strap with clip release on running board suction tray (EA). Location: [#LOC]	$135
3305-0041	Vinyl [#COL] hosebed cover with side twist locks and bungee cord attached rear flap(s).	$1,147
3305-0042	Vinyl Red cover for officer side compartment top boxes. Includes snaps on hosebed side and velcro on the sides and outboard edge for securing. Includes notch for overhead ladder rack.	$381
3305-0043	Vinyl Red cover for driver side compartment top box. Includes snaps on hosebed side and velcro on the sides and outboard edge for securing.	$381
3305-0044	Hinged bustin grating cover each side of dunnage pan. Includes permanent mount bustin grating cover over center of dunnage pan. Diamond plate cover to be attached over officer side mounted bustin grating.	$1,004
3305-0045	Diamond Plate Storage Pan Cover. Includes (1) grab handle and (2) hold downs. Hinge to the front of the storage pan.	$800
3305-0048	Diamond plate cord reel cover. Includes grab handle and hold downs. Hinge to the front of the storage pan. Includes divider wall to isolate cord reel in pan.	$595
3305-0049	(4) piece aluminum low profile hosebed cover. Includes center hosebed divider with notched rear, fill tower(s) access door(s) (as applicable), (2) gas shocks, low profile positive hold-opens/hold-closed at center and at the rear, (6) grab handles- (4) fwd cover and (2) fwd area of rear cover with (2) handrails rear of each cover.	$6,023
3305-0050	Hosebed cover fill tower support brackets. Includes two (2) "C" shaped plates mounted to the hosebed on either side of the fill tower. Plates are to be as high as the hosebed sides. Includes adding of twist locks to each corner of the hosebed cover tower flap (in addition to the velcro already provided).	$445
3305-0052	Vinyl [#COL] hose bed cover with side snaps and bungee cord attached rear flap(s).	$1,147
3305-0053	Diamond plate cover for the dunnage pan area. Includes permanently mounted panel under ladder rack and hinged panel over remaining pan. Includes (2) butterfly latches to hold closed. Hinge to the rear of dunnage pan.	$706
3305-0054	(3) piece aluminum hosebed cover. Includes cover divider/walkway partion divider and (3) sized as required covers, main positive hold open/closed bracket to forward area of hosebed and remaining middle and rear covers to be pinable, fill tower(s) access door(s) (as applicable), (1) gas shock, each cover to have (2) grab handles located on the inboard side (accessable from the walkway) and a nylon strap attached to each cover for easier closing (attach strap to cover divider so it can be reached at any time while the cover is open) (accessable from the walkway).	$5,168
3305-0057	ROM roll-up hose bed cover with satin finish. Inlcudes a momentary switch located [#LOC] and to be easily accessible from the ground. Includes enclosing the operator housing.	$6,268
3305-0058	Nylon black cargo cover for running board suction tray. Location: [#LOC].	$339
3305-0059	Customer supplied material for covers. Vinyl Lime Green hosebed cover with attached rear flap and crosslay cover with attached side flaps.	$1,385
3305-0060	Diamond plate cover for running board suction tray(s). Includes push-button latches and gator grip. Location(s): [#LOC].	$359
3305-0061	Vinyl black hose bed covers with side twist locks and bungee cord attached rear flap(s). Hose bed to have (1) cover each side of hose bed walkway twist-locks down each side and top of covers.	$2,292
3305-0064	Nylon black strap with aluminum quick-release buckle for hose tray. Strap to attach to side walls of tray down low as applicable. Location: [#LOC].	$111
3305-0065	Compartment underbody with slide-out tray. Includes drop down front door with D-ring latch(es). [#LOC]	$2,119
3305-0068	Vinyl [#COL] hosebed cover with attached rear flap(s). Cover to have snaps and velcro along front (no awning attachment) and sides. No twist locks. The rear bungees to be tie-in versus sown (use ilets sized to secure a looped and tied bungee). Bungee to be easily removed and replaced (by fire department) in field.	$1,396
3305-0069	Diamond plate speedlay cover. Includes fixed rear portion on rear of module (over backboard storage area, if applicable) and hold-open with grab handles on rearward area.	$621
3305-0070	Diamond plate portable pump cover.	$1,176
3305-0071	(4) piece aluminum hosebed cover. Includes divider-less cross structure, fill tower(s) access door(s) (as applicable), (2) gas shocks, positive hold-opens/hold-closed at center and at the rear, (6) grab handles- (4) fwd cover and (2) fwd area of rear cover with (2) handrails rear of each cover. For use with Rear Mount Pumper.	$6,077
3305-0076	The mechanical attachments of the side crosslay and rear hosebed covers to be small clip (black) IPO bungees.	$383
3305-0078	Vinyl [#COL] hosebed cover with attached rear flap(s). Includes mechanical attachements at the forward body, the four corners of the main and rear body/pump module and velcro along the sides.	$1,009
3305-0080	Diamond plate cover for running board suction tray(s). Includes push-button latches and gator grip. Includes cords to prevent covers from dropping to the ground when removed. Location(s): [#LOC].	$396

3305-0082	(4) piece aluminum hose bed cover. Includes center hose bed divider with notched rear, fill tower(s) access door(s) (as applicable), (2) gas shocks, positive hold-opens/hold-closed at center and at the rear, (6) grab handles- (4) fwd cover and (2) fwd area of rear cover with (2) hand rails on rear cover. A landing platform (sized and positioned as required with overall rear end configuration) with embossed diamond plate surface will be centrally located at the upper rear of the apparatus to assist with hose bed cover operations.	$2,970
3305-0083	(4) piece aluminum hose bed cover. Includes dividerless cross structure, fill tower(s) access door(s) (as applicable), (2) gas shocks, positive hold-opens/hold-closed at center and at the rear, (6) grab handles- (4) fwd cover and (2) fwd area of rear cover with (2) hand rails on rear cover. A landing platform (sized and positioned as required with overall rear end configuration) with embossed diamond plate surface will be centrally located at the upper rear of the apparatus to assist with hose bed cover operations.	$4,056
3305-0084	(4) piece aluminum hosebed cover. Includes center hosebed divider with notched rear, (2) gas shocks, positive hold-opens/hold-closed at center and at the rear, (6) grab handles- (4) fwd cover and (2) fwd area of rear cover with (2) handrails on rear cover. A landing platform (sized and positioned as required with overall rearend configuration) with embossed diamond plate surface will be centrally located at the upper rear of the apparatus to assist with hosebed cover operations.	$3,650
3305-0086	(4) piece aluminum hosebed cover for use with rear mount body. Includes center hosebed divider with notched rear, fill tower(s) access door(s) (as applicable), (2) gas shocks, positive hold-opens/hold-closed at center and at the rear, (6) grab handles- (4) fwd cover and (2) fwd area of rear cover with (2) handrails on rear cover. A landing platform (sized and positioned as required with overall rearend configuration) with embossed diamond plate surface will be centrally located at the upper rear of the apparatus to assist with hosebed cover operations.	$3,262
3305-0087	(4) piece aluminum hosebed cover for use with rear mount body. Includes divider-less cross structure, fill tower(s) access door(s) (as applicable), (4) gas shocks, positive hold-opens/hold-closed at center and at the rear, (6) grab handles- (4) fwd cover and (2) fwd area of rear cover with (2) handrails on rear cover. A landing platform (sized and positioned as required with overall rearend configuration) with embossed diamond plate surface will be centrally located at the upper rear of the apparatus to assit with hosebed cover operations.	$4,844
3305-0088	(4) piece aluminum hosebed cover with smooth bottom plate. Includes center hosebed divider with notched rear, fill tower(s) access door(s) (as applicable), (2) gas shocks, positive hold-opens/hold-closed at center and at the rear, (6) grab handles- (4) fwd cover and (2) fwd area of rear cover with (2) handrails on rear cover.	$4,266
3305-0089	(4) piece aluminum hose bed cover with smooth bottom plate. Includes dividerless cross structure, fill tower(s) access door(s) (as applicable), (2) gas shocks, positive hold-opens/hold-closed at center and at the rear, (6) grab handles- (4) fwd cover and (2) fwd area of rear cover with (2) hand rails on rear cover.	$4,097
3305-0091	Additional (2) gas shocks at the rear of the hosebed cover.	$116
3305-0092	Additional positive hold-opens/hold-closed at the front of the hosebed cover. Requires front compartment face folding steps to access pins.	$284
3305-0093	Vinyl fire retardent [#COL] hosebed cover with twist locks fasteners and bungee cord attached rear flap(s).	$1,330
3305-0094	Fire Retardent Vinyl [#COL] crosslay cover with attached side flaps.	$576
3305-0095	Booster Reel Cover. Cover to have roll-top access door with handle and held close with rubber latch.	$1,673
3305-0099	Bolt-on aluminum cover for ladder tunnel. To include mounting bracket mounted to underside of dunnage storage pan and or other module/body components. Cover to be removable for access to ladder tunnel area.	$648
3305-0101	(4) piece aluminum hosebed cover. Includes center hosebed divider with notched rear, fill tower(s) access door(s) (as applicable), (4) gas shocks, positive hold-opens/hold-closed at center and at the rear, (6) grab handles- (4) fwd cover and (2) fwd area of rear cover with (2) handrails on rear cover. Includes center bracing between forward and rearward covers for mounting of gas shocks for rearward covers.	$3,184
3305-0102	Heavy duty Vinyl Black wheel well cover located in compartments L2 and R2. Cover to be full width drop down protector to prevent damage to painted surfaces below the wheel well compartments.	$576
3305-0118	Vinyl [#COL] [#LOC] storage tunnel front cover.	$227
3305-0122	Vinyl [#COL] upper hose storage cover with attached rear flap located above the ladder tunnel.	$290
3305-0123	Powered (2) piece aluminum hose bed cover. Includes center hose bed divider with notched rear, fill tower(s) access door(s) (as applicable), (2) electric actuators, (2) grab handles forward area of cover with (2) hand rails on rearward area of cover. Partition at front of hose bed to cover electric actuators (approx 4" loss in hose bed length). Includes controls, through VMUX system (if so equipped): (2) momentary controls - (1) left cover and (1) right cover.	$5,787
3305-0124	Vinyl [#COL] crosslay cover with attached side flaps. Cover to have velcro on the top IPO snaps.	$290
3305-0125	(2) piece aluminum hose bed cover. Includes center hose bed divider with notched rear, fill tower(s) access door(s) (as applicable), (2) gas shocks, positive hold-opens/hold-closed at rear, (2) grab handles on fwd area of cover with (2) hand rails on rear of cover. A landing platform (sized and positioned as required with overall rear end configuration) with embossed diamond plate surface will be centrally located at the upper rear of the apparatus to assist with hose bed cover operations.	$2,970
3305-0128	Vinyl rear cover for diamond plate hosebed cover. Cover to be attached with snaps. Color: [#COL].	$360

3305-0130	Vinyl [#COL] crosslay cover with attached side flaps. Cover to have snaps and velcro on the top. No twist locks. The side bungees to be tie-in versus sown (use ilets sized to secure a looped and tied bungee). Bungee to be easily removed and replaced (by fire department) in field.	$491
3305-0136	(2) piece aluminum hosebed cover. Includes center hosebed divider with NO notched rear, fill tower(s) access door(s) (as applicable), (2) gas shocks, positive hold-opens/hold-closed at rear, (2) grab handles on fwd area of cover with (2) handrails on rear of cover. A FULL width step (sized and positioned as required with overall rearend configuration) with embossed diamond plate surface will be located at the upper rear of the apparatus to assist with hosebed cover/hose loading operations.	$3,517
3305-0137	Powered (2) piece aluminum hosebed cover. Includes center hosebed divider with notched rear, fill tower(s) access door(s) (as applicable), (2) eletric actuators, (2) grab handles forward area of cover with (2) handrails on rearward area of cover. Partition at front of hosebed to cover electric actuators (approx 4" loss in hosebed length). Includes control panel on officer side rear compartment face with (3) momentary switches: (1) master on/off, (1) left cover and (1) right cover.	$6,787
3305-0138	Stokes Basket storage box. Located on top of the driver side hosebed cover. To hold (1) stokes basket with access from a horizontally hinged lift-up diamond plate door with a push-button latch.	$833
3305-0141	Diamond plate hosebed deflector located at front of hosebed area with angled front edge. To be hinged along forward edge with "T" style hold-downs.	$463
3305-0142	Vinyl red side covers for diamond plate crosslay cover. Covers to attach to the DP cover with snaps. The lower corners to have bungee cords. Cords are to be tie-in versus sown. Flaps to have eyelets sized to secure individual looped and tied bungees. Cords to be easily removed and replaced (by fire department) in field.	$296
3305-0143	Vinyl rear cover for diamond plate hosebed cover. Cover to attach to the DP cover with snaps. The lower edge to have bungee cords. Cords are to be tie-in versus sown. Flap to have eyelets sized to secure individual looped and tied bungees. Cords to be easily removed and replaced (by fire department) in field. Color: Red	$375
3305-0144	(4) piece aluminum hosebed cover. Includes center hosebed divider with notched rear, fill tower(s) access door(s) (as applicable), (2) gas shocks, positive hold-opens/hold-closed at center and at the rear, (8) handrails - (4) forward cover and (4) rearward cover. The enhanced extended landing area(s) will be used to assist with hosebed cover operations. For use with Enhanced Extended Rescue Pumper only.	$3,224
3305-0145	Zico ladder control switching wiring cover.	$110
3305-0147	Nylon yellow strap with aluminum quick-release buckle for hose tray. Strap to attach to side walls of tray down low as applicable. Location: [#LOC].	$111
3305-0149	Nylon yellow cargo net on sides for crosslay cover. Cover to have snaps in place of bungees.	$301
3305-0150	Nylon yellow cargo net at rear of diamond plate or vinyl hosebed cover. Cover to have snaps in place of bungees.	$574
3305-0152	Vinyl speedlay cover. For use with individual preconnect module with side by side storage. Includes mechanical hold-downs on top outer corners and quick-release side flap hold downs. Cover color: [#COL].	$336
3305-0157	Nylon yellow cargo net on sides of speedlay. Covers to have snaps in place of bungees.	$290
3305-0158	Diamond Plate Booster Reel Cover. Includes (1) grab handle and (2) hold downs. Hinge towards the front of the storage pan. Includes partitions located around booster reel.	$1,452
3305-0159	Hosebed cover hold open devices to be thru bolted on side of 3x3 hosebed side extrusions.	$111
3305-0163	Powered (2) piece aluminum hosebed cover with smooth bottom plate. Includes center hosebed divider with notched rear, fill tower(s) access door(s) (as applicable), (2) electric actuators, (2) grab handles forward area of cover with (2) handrails on rearward area of cover. Partition at front of hosebed to cover electric actuators (approx 4" loss in hosebed length). Includes control panel on driver side rear body with (3) momentary switches: (1) master on/off, (1) left cover and (1) right cover.	$5,786
3305-0164	Nylon black cargo net hosebed cover with attached rear flap(s).	$1,072
3305-0166	Nylon black strap with aluminum quick-release buckle for hose tray. Strap to attach to side walls of tray down low as applicable. For use with rolled hose. Location: [#LOC].	$121
3305-0168	Vinyl [#COL] hose bed cover with side bungee cords without attached rear flap(s). Requires rear cover option.	$1,022
3305-0169	Diamond plate cover for the dunnage pan area. Includes (2) butterfly latches to hold closed. Hinge to the rear of dunnage pan.	$706
3305-0170	Spring hold down for hose tray. Spring to attach to side wall of tray with scuff plate on pump panel. Location: [#LOC].	$147
3305-0171	Diamond plate speedlay cover (3/16" diamond plate). Includes fixed rear portion on rear of module (over backboard storage area, if applicable) and hold-open with grab handles on rearward area.	$649
3305-0172	Diamond plate booster reel cover with open sides for hose deployment.	$860
3305-0174	Single diamond plate cover for the crosslay area. Includes applicable grab handle(s) and (2) hold downs. Cover to be embossed diamond plate.	$630
3305-0175	Vinyl fire retardent [#COL] hose bed cover with attached rear flap(s).	$1,030
3305-0176	Vinyl fire retardent [#COL] side covers for diamond plate crosslay cover.	$227
3305-0177	Vinyl fire retardent [#COL] cover for running board suction tray. Location: [#LOC].	$227
3305-0178	One piece vinyl fire retardent cover for top mount pump panel opening. Top of vinyl fire retardent cover outboard corners to have twist locks with velcro around permetier. Color to be [#COL].	$793

3305-0179	(2) piece aluminum hosebed cover. Includes divider-less cross structure, fill tower(s) access door(s) (as applicable), (2) gas shocks, positive hold-opens/hold-closed at rear, (2) grab handles on fwd area of cover with (2) handrails on rear of cover. A landing platform (sized and positioned as required with overall rearend configuration) with embossed diamond plate surface will be centrally located at the upper rear of the apparatus to assist with hosebed cover operations.	$3,766
3305-0180	Vinyl [#COL] hose bed cover with side bungee cords and attached rear flap(s). Includes large pull tabs to ease securing cover while wearing gloves.	$1,252
3305-0181	Vinyl [#COL] hosebed cover with side twist locks with Velcro in between the twist locks and bungee cord attached rear flap(s).	$1,373
3305-0182	Hold open retaining pin for aluminum crosslay (single or bi-fold) cover. Locate as required based off options on module.	$144
3305-0183	Vinyl [#COL] crosslay cover with attached side flaps with bungee cord.	$361
3305-0184	Vinyl [#COL] side covers for diamond plate crosslay cover. Includes large pull tabs to ease securing end flaps while wearing gloves.	$181
3305-0185	Nylon red cargo cover for running board suction tray. Location: [#LOC].	$366
3305-0186	Nylon red cargo net on sides for crosslay cover.	$239
3305-0187	Nylon red cargo net at rear of diamond plate or vinyl hose bed cover.	$568
3305-0188	Nylon black strap with footman loops and Velcro closure to secure hose. Location: [#LOC].	$87
3305-0189	The rear flap(s) of the hosebed cover shall be upgraded to add weight to the bottom of the rear vertical flap(s).	$512
3305-0190	(4) piece aluminum hosebed cover. Includes off center hosebed divider located 8" left of center (NOT CENTERED) with notched rear, fill tower(s) access door(s) (as applicable), (4) gas shocks, positive hold-opens/hold-closed at center and at the rear, (6) grab handles- (4) fwd cover and (2) fwd area of rear cover with (2) handrails on rear cover. Includes center bracing between forward and rearward covers for mounting of gas shocks for rearward covers.	$3,698
3305-0191	Vinyl rear cover for diamond plate hose bed cover using California Type 3 straps IPOS. Color: [#COL].	$390
3305-0193	Hold open device(s) shall be provided. Rubber plunger type hold downs(s) shall hold the aluminum crosslay cover(s) (single or bi-fold) in the open position.	$199
3305-0194	Bi-Fold diamond plate cover for the crosslay area. Includes applicable grab handles, (2) hold downs and magnetic door ajar switch(s). Non-aerial applications to be tagged as a non-stepping surface.	$962
3305-0195	(4) piece aluminum hose bed cover. Includes divider-less cross structure, fill tower(s) access door(s) (as applicable), (2) gas shocks, positive hold-opens/hold-closed at center and at the rear, (6) grab handles- (4) fwd cover and (2) fwd area of rear cover with (2) hand rails on rear cover. A landing platform (10" in depth, the width shall be sized and positioned as required with overall rear end configuration) with embossed diamond plate surface will be centrally located at the upper rear of the apparatus to assist with hose bed cover operations.	$4,056
3305-0196	Diamond plate cover for the dunnage pan area. Includes (2) butterfly latches to hold closed and (1) grab handle mounted between butterfly latches. Hinge to the front of dunnage pan.	$706
3305-0197	Hose bed deflector. The diamond plate deflector shall be bolted in place on the front of hose bed area with an angled top edge to shield rain and wind from the frontal area of the hose bed.	$487
3305-0199	Double diamond plate cover for each outboard hose storage area on the Low Hosebed body. Includes applicable grab handle(s) and (2) hold downs on each cover. Covers to be embossed diamond plate and hinged outboard.	$1,441
3305-0200	Vinyl [#COL] end covers for upper outboard hose storage of the hosebed.	$181
3305-0201	Bi-Fold 1/8" smooth plate cover for the crosslay area. Includes applicable grab handles and (2) hold downs. The cover to be painted black durabak. Non-aerial applications to be tagged as a non-stepping surface.	$1,014
3305-0202	(4) Piece aluminum smooth plate with black Scorpion coating (IPOS diamond plate) hosebed cover for use with rear mount body. Includes center hosebed divider with notched rear, fill tower(s) access door(s) (as applicable), (2) gas shocks, positive hold-opens/hold-closed at center and at the rear, (6) grab handles- (4) fwd cover and (2) fwd area of rear cover with (2) handrails on rear cover. A landing platform (sized and positioned as required with overall rear end configuration) with aluminum smooth plate with black Scorpion coating (IPOS diamond plate) surface will be centrally located at the upper rear of the apparatus to assist with hosebed cover operations.	$3,678
3305-0203	Nylon black strap with aluminum quick-release buckle for tailboard hose tray(s). Strap to attach to side walls of tray down low as applicable.	$111
3305-0204	(4) piece aluminum hosebed cover for use with rear mount body. Includes center hosebed divider with notched rear, fill tower(s) access door(s) (as applicable), (2) gas shocks, positive hold-opens/hold-closed at center and at the rear, (6) grab handles- (4) fwd cover and (2) fwd area of rear cover with (2) handrails on rear cover. A landing platform (sized and positioned as required with overall rearend configuration) with embossed diamond plate and gator grip surface will be centrally located at the upper rear of the apparatus to assist with hosebed cover operations.	$3,262
3305-0205	Vinyl [#COL] side covers for diamond plate crosslay cover. Covers to attach to the DP cover with snaps. The lower corners shall be secured in place using California type straps (2) each side IPOS. These straps shall function to allow each strap to be looped around the horizontal crosslay roller on each side as part of the attach system.	$367

3305-0206	Vinyl [#COL] hose bed cover using Nitrogen/Oxygen type straps (2) attach positions each side (4) total to secure the rear flap(s) IPOS. The upper straps shall be sewn in place leaving the ratchet clamp approximately half way or mid height of the rear flap(s). The bottom straps shall be fastened to a strap tie down mounted slightly above the horizontal handrail in line with the sewn in straps above (4) total top and (4) total bottom. The bottom straps shall feed directly above to the ratchet clamps (sewn in) as part of the attach/securing system.	$1,564
3305-0207	Vinyl [#COL] hose bed cover with side bungee cords for main hose bed storage area. Seperate cover w/snaps and attached rear flap for hose chute(s). Aerial application only.	$1,147
3305-0208	Cargo net for inside compartment for containing cribbing in compartment when door is opened. Net to permanently fasten on rearward wall just inside door opening and fasten with buckle straps on forward wall just inside door opening. Cargo netting will be 3" x 3" squares. Location: [#LOC].	$789
3305-0209	Smooth plate speedlay cover painted gray durabak. Includes fixed rear portion on rear of module (over backboard storage area, if applicable) and hold-open with grab handles on rearward area.	$794
3305-0210	Diamond plate cover for the dunnage pan area. Includes permanently mounted panel under ladder rack and hinged panel over remaining pan. Includes (2) butterfly latches to hold closed to include gas spring(s) as hold open device. Hinge to the rear of dunnage pan.	$738
3305-0211	(2) piece aluminum hosebed cover. Includes center hosebed divider with NO notched rear, fill tower(s) access door(s) (as applicable), (2) gas shocks, positive hold-opens/hold-closed at rear, (2) grab handles on fwd area of cover with (2) handrails on rear of cover.	$3,517
3305-0212	Vinyl fire retardent [#COL] hosebed cover with twist locks fasteners and bungee cord attached rear flap(s). Cover to be partial hosebed cover leaving hosebed walkway area uncovered. To extend full length of the hosebed from roof top compartment on the side to divider against walkway in the middle and to hosebed storage pan rearward mounting flange at the front.	$1,330
3305-0213	(4) Piece aluminum hose bed cover. Includes divider-less cross structure, fill tower(s) access door(s) (as applicable), (2) gas shocks, custom positive hold-open devices at the rear and separate hold closed devices (see photos in file), (6) grab handles- (4) fwd cover and (2) fwd area of rear cover with (2) 18" hand rails on rear cover mounted inboard not to interfere with upper warning lights.	$4,141
3305-0214	Nylon black cargo net at rear of diamond plate or vinyl hose bed cover. Notched for hosebed storage compartment(s) and door(s) as required.	$537
3305-0215	Vinyl [#COL] hose bed cover with attached rear flap(s). Cover to have snaps and velcro along front (NO awning attachment) and velcro along sides. No twist locks.	$824
3305-0217	Vinyl [#COL] hosebed cover with attached rear flap(s). Cover to have bungees on sides ipo velcro. Bungee to be easily removed and replaced (by fire department) in field.	$1,396
3305-0218	(4) piece aluminum smooth plate hosebed cover (flat profile with no pitch) painted with Durabak black coating. Includes center hosebed divider with notched rear, notch for boom support, fill tower(s) access door(s) (as applicable), (2) gas shocks, positive hold-opens/hold-closed at center and at the rear, (6) grab handles- (4) fwd cover and (2) fwd area of rear cover with (2) handrails rear of each cover. The enhanced extended landing area(s) will be used to assist with hosebed cover operations. For 50' Teleboom with Enhanced Extended Rescue.	$6,867
3305-0219	(2) piece light weight aluminum hose bed cover. Includes center hose bed divider with notched rear (as applicable), fill tower(s) access door(s) (as applicable), gas shocks, positive hold opens/hold closed at rear, (2) grab handles front and (2) hand rails rear.	$2,904
3305-0220	(2) piece light weight aluminum hose bed cover. Includes dividerless cross structure, fill tower(s) access door(s) (as applicable), (2) gas shocks, positive hold-opens/hold-closed at the rear, (2) grab handles (fwd) and (2) hand rails (rear).	$2,904
3305-0222	Vinyl rear cover for diamond plate hosebed cover. Cover to be attached with bungee cords at all attachment positions. Color: [#COL].	$364
3305-0223	Nylon black cargo net on sides of speedlay. Cover to be attached with bungee cords at all attachment positions.	$312
3305-0227	Vinyl fire retardant rear cover for diamond plate hose bed cover. Color: [#COL].	$281
3305-0228	Fire Retardent Vinyl [#COL] side covers for diamond plate crosslay cover.	$362
3305-0231	Powered (2) piece aluminum hosebed cover with notch built into the officer side rear corner (to miss monitor are mounted). Includes center hosebed divider with notched rear, fill tower(s) access door(s) (as applicable), (2) electric actuators, (2) grab handles forward area of cover with (2) handrails on rearward area of cover. Partition at front of hosebed to cover electric actuators (approx 4" loss in hosebed length). Includes control panel on left rear of body above taillights with (3) momentary switches: (1) master on/off, (1) left cover and (1) right cover.	$6,622
3305-0234	Powered (2) piece aluminum hose bed cover. Includes center hose bed divider with notched rear, fill tower(s) access door(s) (as applicable), (2) electric actuators, (2) grab handles forward area of cover with (2) hand rails on rearward area of cover. A landing platform (sized and positioned as required with overall rear end configuration) with embossed diamond plate surface will be centrally located at the upper rear of the apparatus to assist with hose bed cover operations. Partition at front of hose bed to cover electric actuators (approx 4" loss in hose bed length). Includes (2) momentary controls - (1) left cover and (1) right cover.	$6,003
3305-0236	Vinyl [#COL] hose bed cover with front and side bungee cords and attached rear flap(s). Includes large pull tabs to ease securing cover while wearing gloves.	$1,252
3305-0238	Vinyl [#COL] hose bed covers with attached rear flaps. Two Seperate covers for bi-level hose bed sides stepped to clear overhead rack assembly.	$990
3305-0241	Bi-fold style diamond plate cover for running board suction tray(s) hinged outboard from pump panels. Includes butterfly latches and gator grip. Location(s): [#LOC].	$396

3305-0242	Bolt-on aluminum cover for the forward end of the driver side storage tunnel. To include mounting bracket mounted to underside of dunnage storage pan and or other module/body components as necessary. Cover to be removable for access to tunnel area.	$372
3305-0243	Vinyl [#COL] crosslay cover with attached side flaps. Includes side snaps.	$360
3305-0244	Cargo net: Black nylon with 2 inch openings, mechanical type hold downs and notch to accommodate pan mounted options if applicable. Locate in upper eMAX forward module roof pan area.	$1,192
3305-0246	Smooth plate aluminum rear covers for the application of applicable chevrons mounted on the ends of the top outboard hose bed storage areas. Includes vertical hinge each side and a non-locking D-ring latch. Doors to be wired to door ajar circuit. Storage areas to be open to the top and shall be used for misc. equipment to be added/secured as applicable to NFPA by customer/dealer. Not identified to be used as loose hose storage.	$768
3305-0247	Diamond plate vertically hinged door each side of the 2.5" crosslay hinge rearward. Includes thumb latch and wiring for door ajar switch.	$356
3305-0248	(2) piece aluminum hose bed cover. Includes dividerless cross structure, fill tower(s) access door(s) (as applicable), (2) gas shocks, positive hold-opens/hold-closed at the rear, (2) grab handles (fwd), (2) grab handles rear and (2) hand rails (rearend).	$4,146
3305-0249	The mechanical attachments of the side speedlay and rear hosebed covers to be small clip (black) IPO bungees.	$373
3305-0250	Diamond plate speedlay cover painted gray Zolatone. Includes fixed rear portion on rear of module (over backboard storage area, if applicable) and hold-open with grab handles on rearward area.	$833
3305-0251	Powered (2) piece aluminum smooth plate hosebed cover and painted black Durabak. Includes center hose bed divider with notched rear, fill tower(s) access door(s) (as applicable), (2) electric actuators, (2) grab handles forward area of cover with (2) hand rails on rearward area of cover. Partition at front of hose bed to cover electric actuators (approx 4" loss in hose bed length). Includes controls, through VMUX system (if so equipped): (2) momentary controls - (1) left cover and (1) right cover.	$7,233
3305-0252	Nylon black cargo net hosebed cover with side bungee cords and attached rear flap(s). Rear Cover notched for hosebed storage compartment(s) and door(s) as required.	$1,521
3305-0253	One piece vinyl cover for top mount pump panel opening. Top of vinyl cover outboard corners to have twist locks with velcro around permetier. Color to be [#COL].	$793
3305-0254	Wiring covers in roof top compartments.	$331
3305-0259	Nylon black cargo net at rear of diamond plate or vinyl hose bed cover w/(2) aluminum quick release buckles.	$753
3305-0260	Nylon black cargo net end flaps w/(2) aluminum quick release buckles on each side for crosslay cover.	$536
3305-0263	Removable diamond plate cover for the crosslay area. Includes applicable grab handles and aluminum fabricated brackets with safety pins for hold downs. Aerial applications to be tagged as a non-stepping surface.	$846
3305-0264	Diamond plate cover for running board suction tray(s). Includes butterfly latches and gator grip. Includes cords to prevent covers from dropping to the ground when removed. Location(s): [#LOC].	$396
3305-0265	Vinyl rear cover for diamond plate hose bed cover. The top of the cover shall be mechanically attached to the rear hose bed cover extrusion with over lapping flaps in the center secured with velcro. The lower portion of the cover shall be secured in place with heavy duty nylon straps. The lower portion fasteners shall be mounted at pick up. Color: Red.	$375
3305-0267	(4) piece aluminum hose bed cover. Includes divider-less cross structure, fill tower(s) access door(s) (as applicable), (4) 153 lb gas shocks, positive hold-opens/hold-closed at center and at the rear, (6) grab handles- (4) fwd cover and (2) fwd area of rear cover with (2) hand rails on rear cover. A landing platform (10" in depth, the width shall be sized and positioned as required with overall rear end configuration) with embossed diamond plate surface will be centrally located at the upper rear of the apparatus to assist with hose bed cover operations.	$4,135
3305-0268	Diamond plate cover for the dunnage pan area. Includes (2) butterfly latches to hold closed and (2) gas shocks as hold open device. Cover to hinge to the rear of dunnage pan and open a full 90 deg.	$738
3305-0271	Nylon black cargo net end cover, for driver side upper outboard hose storage of the hosebed.	$137
3305-0274	Vinyl black hose bed cover with attached rear flap, on one side only, to the top of the hose bed storage compartment.	$824
3305-0276	Vinyl red crosslay cover top with attached nylon red cargo net on each side of cover.	$553
3305-0277	Vinyl rear cover for diamond plate hose bed cover. Cover shall attach to hard cover optioned and have weighted bottom edge with additional shock cord attaching cords to comply with NFPA current version. Cover shall be split in the center along hard cover center or divider at center of hose bed. D&S custom covers brand NFPA compliant with reflective yellow and red "A" chevrons.	$825
3305-0278	The hosebed cover divider shall be located offset to one side per the instructions on the body layout.	$160
3305-0280	Nylon black strap with aluminum quick-release buckle for hose tray. Location: to be mounted at final inspection. [#LOC].	$111
3305-0281	(4) piece aluminum hose bed cover. Includes center hose bed divider with notched rear, fill tower(s) access door(s) (as applicable), (2) gas shocks, positive hold-opens/hold-closed at center and at the rear, (6) grab handles- (4) fwd cover and (2) fwd area of rear cover with (2) hand rails on rear cover. Requires an Intermediate rear step located at the upper rear of the apparatus to assist with hose bed cover operations.	$2,970

3305-0282	Vinyl black hose bed cover with nylon black strap with footman loops and Velcro closure to secure hosebed cover without attached rear flap(s). Requires rear cover option.	$1,022
3305-0283	Nylon black cargo net at rear of diamond plate or vinyl hosebed cover. Cover to have nylon black strap with footman loops and Velcro closure to secure hosebed end flap.	$574
3305-0284	Diamond plate hose bed deflector. Aluminum tread plate .25 in thick. Located at front of hosebed area with angled front edge. The NFPA hosebed light (as applicable) to be located on trailing edge and provisions added to secure hose bed vinyl cover along forward edge below deflector. Top of shield to extend upwards approx. 5 in. above hose bed top extrusion and approx. 10.5 in. rearward to trailing edge from front of body.	$291
3305-0285	Powered (2) piece aluminum hosebed cover with smooth bottom plate. Includes center hosebed divider with notched rear, fill tower(s) access door(s) (as applicable), (2) electric actuators, (2) grab handles forward area of cover with (2) handrails on rearward area of cover. Partition at front of hosebed to cover electric actuators (approx 4" loss in hosebed length). Includes control panel [#LOC] with (3) momentary switches: (1) master on/off, (1) left cover and (1) right cover.	$5,786
3305-0286	Cover for side ladder tunnel forward end. Cover shall be fabricated from flat smooth plate aluminum and be easily removable for access to the forward end of the ladder tunnel for clean out. Usable only on body configurations where the ladders do NOT extend into pump module.	$263
3305-0287	(4) piece aluminum hosebed cover (flat profile with no pitch). Includes center hosebed divider with notched rear, fill tower(s) access door(s) (as applicable), (2) gas shocks, positive hold-opens/hold-closed at center and at the rear, (6) grab handles- (4) fwd cover and (2) fwd area of rear cover. (2) handrails on back lip of hosebed cover due to overall height restriction. A landing platform (sized and positioned as required with overall rear end configuration) with embossed diamond plate surface will be centrally located at the upper rear of the apparatus to assist with hose bed cover operations.	$3,259
3305-0291	Nylon red cargo net on sides of speedlay.	$290
3305-0292	Removable diamond plate cover for the hydraulic power supply for E-ONE 2 arm ladder rack for use in top side dunnage or storage pan mounting applications. Includes flush access door with thumb latch to inspect or fill hydraulic reservoir. To include NO STEP tags as applicable.	$357
3305-0293	(2) piece aluminum smooth platehose bed cover and painted black Durabak.. Includes dividerless cross structure, fill tower(s) access door(s) (as applicable), (2) gas shocks, positive hold-opens/hold-closed at the rear, (2) grab handles (fwd) and (2) hand rails (rear).	$5,070
3305-0294	Vinyl red cover for fire extinguisher box. Cover to attach to the shelf lip with snaps. The lower corners to have bungee cords.	$296
3305-0296	(2) piece aluminum hose bed cover and painted black Durabak with smooth bottom plate. Includes center hose bed divider with notched rear (as applicable), fill tower(s) access door(s) (as applicable), gas shocks, positive hold opens/hold closed at rear, (2) grab handles front and (2) hand rails rear.	$3,826
3310-0017	Auxiliary jack pad 24X24 (PR) with side mounted handle. Includes mounting brackets.	$1,118
3310-0039	Cut-out on compartment floor for exhaust and cover plate for hydraulic lines.	$463
3310-0084	All tags on body to be mechanically attached with S/S screws and nuts.	$773
3310-0088	Body module for Snozzle boom.	$6,781
3310-0098	Step fold-down (EA). Location: [#LOC].	$890
3310-0112	Body module for Snozzle boom. Side panels / doors to be smooth painted plate.	$7,965
3310-0121	Body module for 50' Mid-mount boom. 100" wide. Includes left side staircase and provision for aerial control panel.	$7,356
3310-0143	Auxiliary jack pad 24X24 (PR) with handle welded to top surface of pad. Includes mounting brackets.	$1,118
3310-0146	Auxiliary jack pad 24X24 (PR) with side mounted handle. Includes mounting brackets. Driver side mounted below L1, officer below RSBM. Mid mount boom only.	$1,118
3310-0205	Additional "Safe Operating Grade Indicator" gauge shall be provided, gauge is in addition to gauge at rear of body. To be located side facing at rear of body midway up on body panel above corner tailboard. Aerial body only.	$112
3310-0208	Jack leg opening covers smooth plate painted job color (2) sets. Includes outrigger covers and fixed filler panels.	$1,068
3310-0209	Forward jack pad access doors painted outside surface job color and inside surface zolatone gray IPO diamond plate. 95 Mid-mount only.	$415
3310-0215	Transverse compartment floor to be extended out to door opening in L1.	$402
3310-0252	Body module for 50' Mid-mount boom. 100" wide. Includes left side staircase, provision for aerial control panel and access door below aerial control panel. The access door and the left and right rear facing outboard panels just ahead of pump panel to be smooth plate painted job color. The following items: staircase platework, access steps, compartment top (below the boom module control panel) and top of module platework shall be aluminum smooth plate painted black durabak.	$8,241
3315-0005	2-Bottle DOT 6000 PSI Breathing Air Cascade System with air panel, bottle rack and all associated air lines, valves and gauges. Rack and bottles to be located in [#LOC].	$12,105
3315-0006	4-Bottle DOT 6000 PSI breathing air cascade system with air panel, bottle rack and all associated air lines, valves and gauges. Rack and bottles to be located [#LOC].	$17,001
3315-0009	4-Bottle ASME 6000 PSI Breathing Air Cascade System with air panel, bottle rack and all associated air lines, valves and gauges. Rack and botles to be located in [#LOC].	$21,971
3315-0044	Storage rack for four (4) DOT or ASME air bottles. Mounted horizontal in roof top compartments. Locate two (2) each side in roof top compartments for dealer supplied and installed DOT/ASME bottles and Cascade system.	$791

3315-0050	SpaceSaver Fill Station, vertical operation, fill two SCBA cylinders. Fill station to be locate: L2 floor. Sierra Booster Pump, 6000 PSI. Locate: Above L2 in coffin style compartment with a remote mounted on control panel. 4-Bottle DOT 6000 PSI Breathing Air Cascade System with air panel located in L2 above fill station, bottle rack and all associated air lines, valves and gauges. Rack and bottles to be located: (2) in roof top compartments over wheelwells on officer side and (2) in roof top compartment over wheelwells on driver side.	$30,291
3315-0051	SpaceSaver Fill Station, horizontal operation, fill two SCBA cylinders. Fill station to be locate: R2 floor. Sierra Booster Pump, 6000 PSI. Locate:: 2-Bottle DOT 6000 PSI Breathing Air Cascade System with air panel located above fill station and all associated air lines, valves and gauges. The bottles are to be located on the rear wall.	$25,191
3315-0062	1-Bottle DOT 6000 PSI tool air system with air panel, bottle and all associated air lines, valves and gauges (Breathing Air Systems supplied).Bottle located in L1 rearward back wall. Air Panel located in L3 upper between reels.	$4,065
3315-0063	Storage enclosure for breathing air system's control panel shall be provided. Panel for (1) DOT tool system. Located in L3 between reels as high as possible.	$384
3315-0064	Storage rack for One (1) DOT air bottle. Mounted vertical top of body in compartment L1 rearward to back wall.	$572
3320-0005	SCBA Bottle Storage. (4) Cast Product SCBA bottle storage with gasketed doors. (2) each side in rear wheel well area.	$714
3320-0006	SCBA Bottle Storage. (3) Cast Product SCBA bottle storage with gasketed doors. (2) officer side and (1) driver side (fwd) in rear wheel well area.	$1,069
3320-0007	SCBA Bottle Storage. (7) E-ONE SCBA bottle storage with hinged doors (doors to match wheel well material) with push button latches. (4) officer side and (3) driver side in wheel well area.	$1,143
3320-0008	SCBA Bottle Storage. (8) E-ONE SCBA bottle storage with hinged doors (doors to match wheel well material) with push button latches. (4) officer side and (4) driver side in wheel well area.	$1,363
3320-0011	SCBA Bottle Storage. (11) E-ONE SCBA bottle storage with hinged doors (doors to match wheel well material) with push button latches. (6) officer side and (5) driver side in wheel well area- (3) FWD and (2) RWD.	$1,536
3320-0012	SCBA bottle storage. (7) E-ONE SCBA bottle storage with hinged stainless steel doors with push-button latches. (4) officer side and (3) driver side in wheel well area.	$1,248
3320-0014	SCBA Bottle Storage. (6) E-ONE SCBA bottle storage with hinged doors (doors to match wheel well material) with push button latches. (3) officer side and (3) driver side in wheel well area for use with dual tank fills.	$1,116
3320-0015	SCBA Bottle Storage. (2) Cast Product SCBA bottle storage with gasketed doors. Located driver side rear wheel well area.	$714
3320-0016	SCBA Bottle Storage. (7) E-ONE SCBA bottle storage with hinged doors with push button latches. (4) officer side and (3) driver side in wheel well area. Rear driver side to have Cast Product SCBA bottle storage with gasketed door.	$1,143
3320-0017	SCBA Bottle Storage. (4) Cast Product SCBA bottle storage with gasketed doors. (2) each side in rear wheel well area. Recessed fuel fill to be protected behind the rear driver side SCBA door.	$1,278
3320-0018	SCBA Bottle Storage. (8) Fire Shopp SCBA bottle storage with hinged doors with push button latches. (4) officer side and (4) driver side in wheel well area.	$1,664
3320-0019	SCBA Bottle Storage. (7) Fire Shopp SCBA bottle storage with hinged doors with push button latches. (4) officer side and (3) driver side in wheel well area.	$1,393
3320-0020	SCBA Bottle Storage. (4) Fire Shopp SCBA bottle storage with hinged doors with push button latches. (2) officer side and (2) driver side in wheel well area.	$1,211
3320-0021	SCBA/Wheel Chock Storage. (2) Cast Product SCBA bottle storage with gasketed doors on driver side in wheel well area. (2) wheel chock storage compartments with hinged doors and push button latches located on officer side in wheel well area. (2) wheel chocks to be stored per compartment. Does not include wheel chocks. Storage doors to match wheel well material.	$2,825
3320-0022	SCBA Bottle Storage. (7) E-ONE SCBA bottle storage with hinged doors (doors to match wheel well material) with push button latches. (3) officer side and (4) driver side in wheel well area.	$1,143
3320-0024	SCBA Bottle Storage. (7) E-ONE SCBA bottle storage with hinged stainless steel doors with push button latches. (4) officer side and (3) driver side in wheel well area.	$1,509
3320-0028	Vision Mark tag for officer side rearward SCBA bottle storage. Tag to have red letters on white background. Tag to read "Extinguishers".	$41
3320-0030	SCBA Bottle Storage. (8) E-ONE SCBA bottle storage with hinged stainless steel doors with push-button latches. (4) officer side and (4) driver side in wheel well area.	$915
3320-0031	Zico, metal QUIC-STORAGE bottle rack for large bottles for 6.1" to 7.4" cylinder. Locate in [#LOC]. Each unit will have straps to hold the bottle in and all top units will have a flat top. Each unit will be bolted together and be [#COL] PVC coated.	$133
3320-0032	Zico, metal QUIC-STORAGE for small bottles 5.3" to 5.8" cylinder. Locate in [#LOC]. Each unit will have straps to hold the bottle in, an angle floor to hold bottle in place, and all top units will have a flat top. Each unit will be bolted together and be [#COL] PVC coated.	$133
3320-0038	SCBA bottle storage. (2) Fire Shopp style SCBA bottle storage with hinged brushed stainless steel doors with push-button latches. (1) officer side and (1) driver side in the rear wheel well area.	$606
3320-0039	SCBA bottle storage. (3) Fire Shopp style SCBA bottle storage with hinged brushed stainless steel doors with push-button latches. (2) officer side and (1) driver side in the rear wheel well area.	$909
3320-0040	SCBA bottle storage. (4) Fire Shopp style SCBA bottle storage with hinged brushed stainless steel doors with push-button latches. (2) officer side and (2) driver side in the rear wheel well area.	$1,211

3320-0041	SCBA Bottle Storage. (4) Cast Product SCBA bottle storage with gasketed doors with locking latches. (2) each side in rear wheel well area.	$799
3320-0043	SCBA/Wheel Chock Storage. (5) E-ONE SCBA bottle storage with hinged doors (doors to match wheel well material) with push button latches. (4) officer side and (1) driver side in wheel well area. (1) wheel chock storage compartment with hinged door and push button latch driver side in forward wheel well area. (2) wheel chocks to be stored per compartment. Does not include wheel chocks.	$1,773
3320-0044	SCBA Bottle Storage. (6) E-ONE SCBA bottle storage with hinged stainless steel doors with push button latches. (3) officer side and (3) driver side in wheel well area. There will (2) bottles forward of the rear axle and (1) rearward.	$813
3320-0045	SCBA Bottle Storage. (7) E-ONE SCBA bottle storage with hinged stainless steel doors with push button latches. (4) officer side and (3) driver side in wheel well area.	$865
3320-0047	SCBA Bottle Storage. (2) Cast Product SCBA bottle storage with gasketed doors. Located officer's side rear wheel well area.	$714
3320-0050	SCBA Bottle Storage. (7) E-ONE SCBA bottle storage with hinged polished stainless steel doors with push button latches. (4) officer side and (3) driver side in wheel well area.	$1,542
3320-0052	Stainless steel trim on bottom edge of each SCBA/Extinguisher compartment opening.	$206
3320-0055	SCBA Storage. (6) Fire Shopp SCBA bottle storage with hinged doors with push button latches. (4) Driver side rear wheel well area and (2) officer side (located either side of the rearward tandem wheel).	$1,815
3320-0058	SCBA Bottle Storage. (2) Fire Shopp SCBA bottle storage with hinged doors with push button latches. Located centered in officer side wheel well area.	$606
3320-0062	SCBA/Wheel Chock Storage. (1) E-ONE SCBA bottle storage with hinged door (door to match wheel well material) with push button latches. (1) driver side in wheel well area. (3) wheel chock storage compartment with hinged door and push button latch, (1) driver side in forward wheel well area and (2) officer side in forward and rearward wheel well area. (2) wheel chocks to be stored per compartment. Does not include wheel chocks.	$2,597
3320-0065	SCBA Bottle Storage. (6) Fire Shopp SCBA bottle storage with hinged doors with push button latches. (3) officer side and (3) driver side in wheel well area.	$1,303
3320-0066	Zico Bottle rack for large bottles. Locate in roll-out tray in B1 (vertically mounted) 3 wide x 3 deep. Each unit will have straps to hold the bottle in and all top units will have a flat top. Each unit will be bolted together and be Black PVC coated.	$130
3320-0067	SCBA Bottle Storage. (5) Cast Product SCBA bottle storage with gasketed doors. (3) officer side - (2) over forward axle and (1) at rear of wheel well area. (2) driver side (over forward axle) in rear wheel well area.	$892
3320-0069	PAC Cylinder Mate. Locate in [#LOC]. Each unit will be black in color and have a strap to secure bottle.	$228
3320-0070	Each SCBA storage area to include a ribbed rubber insert mounted to rear of storage area.	$85
3320-0071	SCBA bottle storage for 5.25" diameter high pressure cylinders. (3) dually style SCBA bottle compartments with hinged brushed stainless steel doors and push-button latches for total storage of 6 bottles. (2) officer side and (1) driver side in the rear fender panels.	$1,116
3320-0074	SCBA Bottle Storage. (16) E-ONE SCBA bottle storage with hinged doors (doors to match wheel well material) with push button latches and one aluminum tray for each bottle. (8) officer side and (8) driver side in wheel well area.	$2,143
3320-0076	SCBA Bottle Storage. (2) Cast Product SCBA bottle storage with gasketed doors. Located (1) driver's side forward wheel well area, (1) officer's side rear wheel well area.	$714
3320-0079	SCBA Bottle Storage. (7) Fire Shopp SCBA bottle storage with hinged doors with push button latches (wired to door ajar). (4) officer side and (3) driver side in wheel well area.	$1,877
3320-0080	SCBA Bottle Storage. (2) Fire Shopp SCBA bottle storage with hinged doors with push button latches. Located centered in driver side wheel well area.	$606
3320-0081	Vision Mark tags (2) for driver side wheel well area SCBA bottle storage. Tags to have red letters on white background. (1) Tag forward inboard tube to read "WATER EXTINGUISHER". (1) Tag rearward inboard tube to read "DRY CHEM".	$102
3320-0084	Extinguishers label to be mounted on the Officer's side rear SCBA bottle storage door IPOS.	$39
3320-0085	SCBA bottle storage for 5.25" diameter high pressure cylinders. (4) dually style SCBA bottle compartments with hinged brushed stainless steel doors and push-button latches for total storage of 7 bottles. (2) officer side and (2) driver side in the rear wheel well area. Left side rear door covers the fuel pocket and has single bottle SCBA storage.	$1,421
3320-0086	SCBA/Wheel Chock Storage. (3) E-ONE SCBA bottle storage with hinged doors (doors to match wheel well material) with push button latches. (2) Officer side and (1) driver side in wheel well area. (2) Wheel chock storage compartments with hinged door and push button latch. (1) Officer side, (1) driver side in forward wheel well area. (2) Wheel chocks to be stored per compartment. Does not include wheel chocks.	$2,263
3320-0088	SCBA/Wheel Chock Storage. (5) E-ONE SCBA bottle storage with hinged doors. Doors are smooth aluminum plate painted job color (doors only) with push button latches. (4) Officer side and (1) driver side in wheel well area. (1) Wheel chock storage compartment with hinged door and push button latch driver side in forward wheel well area. (2) wheel chocks to be stored per compartment. Does not include wheel chocks.	$1,773
3320-0089	SCBA Bottle Storage. (4) Fire Shopp SCBA bottle storage with hinged doors with push button latches with locking latches. (2) officer side and (2) driver side in wheel well area.	$1,410
3320-0091	SCBA Bottle Storage. (6) E-ONE SCBA bottle storage with hinged doors (doors to match wheel well material) with push button latches. (3) officer side and (3) driver side in wheel well area. All doors to be hinged forward.	$2,034

3320-0092	PAC Cylinder Mate. Each unit will be black in color and have a strap to hold the bottle in. Locate: Inside rear body, drivers side, on top of counter top in rear most corner.	$228
3320-0093	SCBA bottle storage. (3) Fire Shopp style SCBA bottle storage with hinged brushed stainless steel doors with push-button latches. (2) officer side and (1) driver side in the forward wheel well area.	$909
3320-0095	SCBA Bottle Storage. (7) E-ONE SCBA/Extinguisher bottle storage with hinged stainless steel doors with push button latches. (4) officer side and (3) driver side in wheel well area.	$1,530
3320-0096	Tag for SCBA/Extinguisher bottle storage. Tag to have red letters on white background. Tag to read "SCBA/FIRE EXTINGUISHER"	$41
3320-0097	SCBA/Wheel Chock Storage. (3) E-ONE SCBA bottle storage with hinged doors (doors to match wheel well material) with push button latches in driver side in wheel well area. (2) Wheel chock storage compartments with hinged door and push button latch in officer side in wheel well area. Does not include wheel chocks.	$2,263
3320-0099	SCBA Bottle Storage. (7) Fire Shopp SCBA bottle storage with hinged doors with locking push button latches. (4) officer side and (3) driver side in wheel well area.	$1,822
3320-0101	SCBA bottle storage. (7) E-ONE SCBA bottle storage with hinged stainless steel doors with push-button latches. (4) officer side and (3) driver side in wheel well area. Left side rear door also covers the fuel pocket.	$1,349
3320-0103	SCBA Bottle Storage. (7) E-ONE SCBA bottle storage with hinged doors (doors to match wheel well material) with 1/4 turn latches. (4) officer side and (3) driver side in wheel well area.	$1,143
3320-0106	SCBA Bottle/Extinguisher Storage. (8) E-ONE SCBA/Ext. bottle storage with hinged doors (doors to match wheel well material) with push button latches. (4) officer side and (4) driver side in wheel well area. Driver side to accommodate four (4) Scott 45 min 4500 PSI bottles. Officer side to accommodate two(2)Amerex model A411 20# ABC Dry Chem extinguishers and Two(2) Amerex model A240 2.5 gal pressurized water extinguishers. Officer side to load one ABC drychem and One H2O extinguisher in forward storage and same in rearward storage arraged thus to provide space for the different nozzles on extinguishers.	$1,408
3320-0107	SCBA Bottle Storage. (4) Fire Shopp SCBA bottle storage with hinged doors with push button latches. (4) driver side only in wheel well area. Officer side SCBA not to be installed due to rear body plumbing options. Available only on commercial units with forward fuel tanks or custom applications with officer side only fuel fill.	$841
3320-0110	SCBA Bottle Storage. (4) E-ONE SCBA bottle storage with hinged doors (doors to match wheel well material) with push button latches. (4) officer side only.	$682
3320-0111	SCBA Bottle Storage. (4) E-ONE SCBA bottle storage with hinged doors (doors to match wheel well material) with push button latches. (4) driver side only.	$682
3320-0114	SCBA Bottle Storage. (9) E-ONE SCBA bottle storage with hinged doors (doors to match wheel well material) with push button latches. (6) officer side and (3) driver side in wheel well area.	$2,507
3320-0117	SCBA Air Pack Storage. (4) E-ONE SCBA air pack storage (2 each side) with hinged door (door to match wheel well material) with push button latches. Does not include SCBA bottles or air pack.	$2,736
3320-0119	SCBA/Wheel Chock Storage. (5) E-ONE SCBA bottle storage with hinged doors (doors to match wheel well material) with push button latches. (4) officer side and (1) driver side in wheel well area. (1) wheel chock storage compartment with hinged door and push button latch driver side in forward wheel well area. (2) wheel chocks to be stored per compartment. Does not include wheel chocks.	$2,542
3320-0122	SCBA Bottle Storage. (15) Fire Shopp SCBA bottle storage with hinged doors with push button latches. (8) officer side and (7) driver side in wheel well area.	$3,057
3325-0000	E-ONE designed PTO driven HRT system, 10,500 PSI, with 3 tool capability.	$38,917
3325-0001	E-ONE designed PTO driven HRT system, 10,500 PSI system, with 4 tool capability.	$46,631
3325-0003	E-ONE designed PTO driven HRT system, 10,500 PSI system, with 2 tool capability.	$31,200
3325-0004	XRT Hydraulic tool system with 2 tool capability. 10,500 PSI system. Includes selector vlv for each reel, hyd res / filter and remote cooler. Requires gen with XRT hyd pump.	$21,454
3325-0005	E-One designed PTO driven HRT system. 5,000 PSI system with 3 tool capability.	$38,917
3325-0009	XRT Hydraulic tool system with 3 tool capability. 5,000 PSI system. Includes selector vlv for each reel, hyd res / filter and remote cooler. Requires gen with XRT hyd pump.	$24,113
3325-0010	XRT Hydraulic tool system with 2 tool capability. 5,000 PSI system. Includes selector vlv for each reel, hyd res / filter and remote cooler. Requires gen with XRT hyd pump.	$25,123
3325-0014	XRT Hydraulic tool system with 3 tool capability. 10,500 PSI system. Includes selector vlv for each reel, hyd res / filter and remote cooler. Requires gen with XRT hyd pump.	$24,113
3325-0015	HRT 2 tool system for Holmatro, thru drive on generator hydraulic pump for HRT air clutch and drive pump. Locate reservoir in upper pan adjacent to the hydraulic generator unit in rear dunnage pan. Locate the manifold inside the pump panel compartment up high with roof access for adjustments. Locate the cooler adjacent to the foam system cooler in forward dunnage pan. Plumb to reels in front bumper.	$47,041
3325-0016	E-ONE designed PTO driven HRT system, 10,000 PSI, with 3 tool capability.	$38,917
3325-0018	There will be a thru shaft for the generator to work off the same PTO as HRT system.	$2,141
3330-0001	Slide-out platform, integral driver side running board (includes hand rail as applicable).	$1,346
3330-0002	Slide-out platform, rollerless. Includes chrome grab handle centered on the front face of the platform (includes hand rail as applicable). Located [#LOC].	$1,303
3330-0007	Folding Step. Location [#LOC]. Each location requires a minimum of (1) handrail per NFPA.	$126
3330-0008	Handrail 12". Location [#LOC].	$111
3330-0012	Intermediate pump panel step officer side with forward tapered corner. Includes step lighting (as applicable). Step light to be switched thru work light in cab.	$670

3330-0013	Platform with 500lbs. slides. Locate [#LOC]. Platform sized as required per location. I includes a chrome grab pull handle and a body mounted handrail (as applicable for body mounted locations).	$877
3330-0020	Intermediate pump panel step driver and officer side with forward tapered corner. Includes step lighting (as applicable). Step lights to be switched through work light in cab.	$1,287
3330-0023	Slideout platform-integral officer side running board. Not available with a front suction (includes handrail as applicable).	$1,346
3330-0025	Steps rear. Includes folding steps on officer side (staggered stepped as applicable with tailboard depth) for additional hosebed access and handrail mounted on officer side upper hosebed side (as applicable).	$362
3330-0026	(3) Cast Product steps. Mount to driver side of B1. To include lighting under each step and driver side upper hose bed hand rail.	$335
3330-0028	Rear driver side cast products steps with intermediate step. Includes step lighting with cast product steps.	$944
3330-0031	Intermediate pump module step officer side with forward and rearward tapered corners. Locate just below the crosslay floor. Includes step lighting (as applicable). Step light to be switched thru work light in cab.	$439
3330-0033	Intermediate pump module step driver side. Locate just below the crosslay floor. Includes step lighting (as applicable). Step light to be switched thru work light in cab.	$310
3330-0034	Recessed folding step box. Driver side rear. To accommodate all steps as applicable.	$249
3330-0035	Recessed folding step box. Officer side rear. To accommodate all steps as applicable.	$249
3330-0036	(5) Folding Steps. Located on the officer and driver side behind rear doors of cab. Handrail to be mounted on upper portion of cab for access to the crosslays	$1,293
3330-0037	Intermediate pump panel step driver side directly below crosslays (full width). Includes (2) lower folding steps with (1) loop handrail towards rear. Includes step lighting (as applicable). Step light to be switched thru work light in cab.	$1,092
3330-0038	Upper hosebed handrail. Locate to rear most area of hosebed with same stanchions as rear tailboard handrails. Handrail not to be in the hosebed.	$232
3330-0041	Steps Rear NFPA. Includes diamond plate corner steps on driver and officer side for NFPA hosebed access and handrail mounted on driver and officer side upper hosebed side (as applicable)	$235
3330-0042	Hansen white LED body hand rails upgrade package (includes pump module if applicable).	$1,306
3330-0043	Full width handrail to be mounted just below hosebed. Handrail to run from beavertail to beavertail. Includes (2) pass-through stanchions equally spaced. This handrail is in place of standard handrail.	$346
3330-0044	Step rear intermediate. Includes steps for NFPA hosebed access and handrail on upper hosebed side on driver side. Locate: (1) large corner step each side below intermediate step and (1) small corner step each side above intermediate step. Includes handrail mounted on officer upper hosebed side.	$713
3330-0045	Handrail to be mounted just below hosebed to be thru bolted. Includes (2) pass-through stanchions equally spaced. This 48" handrail is in place of standard 48" handrail.	$496
3330-0046	Folding Step Package. Steps include LED integral lights. Locate (3) each front compartment face and (2) each side rear. Includes applicable handrails as required.	$2,072
3330-0047	(2) Folding Steps. Located on the officer and driver side behind rear doors of cab. Rear cab handrails will be used for steps.	$698
3330-0048	Handrails above compartments over 96" (Pair). To be mounted on top of body.	$346
3330-0049	Handrails full length of hosebed cover door. Total of (4) handrails. Location (1) handrail on inboard side of each hosebed cover door.	$1,087
3330-0050	Intermediate pump panel step driver side with forward tapered corner. Includes step lighting (as applicable). Step light to be switched thru work light in cab.	$670
3330-0052	Slideout platform-rollerless low profile style located [#LOC]. Includes (1) hand rail (mounted as applicable).	$873
3330-0053	Folding Step. Location [#LOC]. Step include integral lights. Each location requires a minimum of (1) handrail per NFPA.	$147
3330-0055	Steps rear. Steps include integral lights. Includes folding steps on officer side (staggered stepped as applicable with tailboard depth) for additional hosebed access and handrail mounted on officer side upper hosebed side (as applicable).	$438
3330-0056	Intermediate pump panel step officer side with forward and rearward tapered corners. Includes step lighting (as applicable). Step lights to be switched thru work light in cab.	$837
3330-0057	Handrails to be mounted just below hosebed to be thru bolted. Handrails to have offset stanchions. These (2) appropriately sized handrails are in place of standard 48" handrail.	$496
3330-0058	Intermediate pump panel step driver side with forward and rearward tapered corners. Includes step lighting (as applicable). Step lights to be switched thru work light in cab.	$837
3330-0061	Handrail to be mounted on the rear of the hosebed. Handrail to use offset stanchions and be mounted downward. This is in place of standard below the hosebed handrail.	$178
3330-0062	Step rear intermediate. Intermediate rear step to be embossed diamond plate. Includes folding steps on driver side for NFPA hosebed access and handrail mounted on driver side upper hosebed side (as applicable).	$550
3330-0063	Steps rear. Includes diamond plate gator grip corner steps on officer side for hosebed access and handrail mounted on officer side upper hosebed side (as applicable).	$454
3330-0064	Hosebed Access Ladder. Aluminum extruded ladder with diamond plate gator grip steps located on driver side inboard of beavertail. Requires removal of gator grip on tailboard below step for mounting puroses.	$1,281
3330-0065	Zico access ladder. Location: [#LOC]. Includes required step lights.	$1,673

3330-0067	Compartment (interior) mounted manually operated fold-out step/platform with gator grip surface. Includes a mechanical hold close located in the compartment and (1) vertically mounted handrail mounted along one side of the compartment exterior. Step/platform will reduce compartment interior mounted items overall width and/or depth. Locate: [#LOC].	$975
3330-0069	Spacer bracket for platform mounting. Bracket to lower platform to approx. 12" from ground (measured to bottom of platform). Locate: [#LOC].	$257
3330-0070	Steps rear driver and officer (Montreal). Includes folding steps on driver and officer side with steps mounted as far rearward on the beavertail (not staggered) as applicable. Steps located (top of tailboard to top of step(down) flat surface) lowest (11"), middle (24.5") and top (39.5").	$417
3330-0071	Step rear intermediate above B2.	$702
3330-0072	Hansen red LED body handrails upgrade package.	$1,306
3330-0073	Step rear intermediate. Locate above B1, includes handrail (in place of horizontal hosebed handrail).	$550
3330-0074	Access ladder. Aluminum extruded ladder with ribbed aluminum extrusion steps located on officer side of pump module offset to the rear. Rear rail to loop up and over to aid in access into/out of dunnage storage pan.	$1,575
3330-0075	Slideout platform - SlideMaster. Location: [#LOC].	$1,718
3330-0076	Pool style hand rail. Includes and approx. 16" loop over the body. Location: driver side staircase; forward hand rail.	$250
3330-0077	Intermediate pump panel step officer without taper. Includes step lighting (as applicable). Step light to be switched thru work light in cab.	$707
3330-0078	Handrail pool stlye. Locate on rear of beavertail and rear upper body corner. In place of standard 48" beavertail and 10" upper rear body handrails.	$432
3330-0079	Slide-out platform, rollerless. Includes chrome grab handle centered on the front face of the platform (includes hand rail as applicable for body mounted locations) and required step lighting. Located [#LOC].	$877
3330-0080	Intermediate pump panel step driver side located rearward of the crosslays. Includes step lighting (as applicable). Step lights to be switched thru work light in cab.	$837
3330-0081	(5) Folding Steps. Located on the driver side behind rear doors of cab w/ diamond plate paint guard. Handrail to be mounted on upper portion of cab for access to dunnage area.	$763
3330-0082	Handrail 36". Location: driver side vertically mounted on forward corner extrusion of pump module..	$330
3330-0083	Handrail 18". Location: (1) on top of forward staircase module 3x3 extrusion, (1) on officer side lip of staircase storage pan and (1) on top of officer side compartment top offset to front.	$494
3330-0085	Ladder, aluminum access rear of body with extruded and ribbed extrusion sides and steps. The outboard vertical extrusion is to extend full height and over the rear upper body for an additional gripping surface when accessing the upper body/hosebed area. Locate to the [#LOC]	$572
3330-0087	Aluminum access ladder with extruded and ribbed extrusion sides and steps. Note that ladder width may vary with position of pump intake/discharge locations. Locate to the [#LOC]	$1,141
3330-0089	Intermediate pump panel step driver and officer side without taper. Includes step lighting (as applicable). Step light to be switched thru work light in cab. Mounting feet to be reverse mounted due to vertically hinged panel.	$1,287
3330-0090	Handrail on pump module to be full length as possible. Location: [#LOC].	$111
3330-0093	Ladder access, aluminum extruded ladder with ribbed aluminum extrusion steps located on the rear offset to the officer side. Includes required step lights.	$1,585
3330-0094	A pair of 12" handrails shall be supplied. Locate 1 each side outboard of ladder on roof.	$220
3330-0095	Intermediate pump panel step driver and officer side located rearward of the backboard storage. Includes step lighting (as applicable). Step lights to be switched thru work light in cab.	$837
3330-0096	Steps rear package. Includes (2) diamond plate gator grip corner steps - (1) up high and (1) down low and (1) folding step between the corner steps on the driver and officer sides for hosebed access. Includes handrails mounted vertically on driver and officer side rear upper hosebed sides (as applicable).	$454
3330-0097	Handrail 36". Location: (1) each side on driver and officer side pump module up high.	$496
3330-0098	Handrail 12". Location outboard driver and officer side rear hosebed side.	$111
3330-0099	Step rear intermediate. Intermediate rear step to be located just below the upper rear body compartment.	$550
3330-0100	Step below body. Located below [#LOC]. Each location requires a minimum of (1) handrail / handhold per NFPA.	$335
3330-0101	Intermediate pump panel step for rear pump panel.	$373
3330-0104	Dual lighted LED folding steps rear NFPA. Includes folding steps on officer side (staggered stepped as applicable with tailboard depth) for additional hosebed access and handrail mounted on officer side upper hosebed side (as applicable).	$386
3330-0105	Dual lighted LED folding step. Location: [#LOC]. Each location requires a minimum of (1) handrail per NFPA.	$119
3330-0106	Step rear intermediate. Intermediate rear step to be located just below the upper ladder storage compartment.	$550
3330-0107	All body and pump module (if applicable) hand rails to use Austin Hardware model GR-002-AL-BRT-144 knurled bright anodized aluminum tubes IPOS.	$290
3330-0118	Steps rear. Steps include integral LED lights. Includes (6) folding steps - (3) on driver side and (3) on officer side (staggered stepped as applicable with tailboard depth) for additional hosebed access and handrail mounted on driver and officer side upper hosebed side (as applicable).	$649
3330-0123	Rear landing platform located above the B1 compartment. Landing platform to be used for hose loading operations and will be embossed diamond plate.	$550

3330-0124	Access ladder. Aluminum extruded ladder with ribbed aluminum extrusion steps located on the rear offset to the driver side. Includes required step lights.	$1,585
3330-0125	Slideout platform-integral driver side running board (includes handrail as applicable). The platform step to be smooth plate with gator grip painted black durabak.	$1,618
3330-0126	Slideout platform-rollerless. Includes chrome grab handle centered on the frt face of the platform (includes handrail as applicable). Located below officer side pump panel. The platform step to be smooth plate with gator grip painted black durabak	$1,575
3330-0127	Handrail 36". Location: (1) each side on driver and officer side pump module forward extrusion vertically mounted.	$496
3330-0129	Auto Kwikee step. Step shall be wired into the door interlock system to enable the step to automatically extend when the door is opened and retract when the door is closed. Location: [#LOC].	$799
3330-0133	Access ladder. Aluminum extruded ladder with ribbed aluminum extrusion steps located on the rear offset to the driver side. Includes required step lights.	$1,585
3330-0134	Step rear intermediate. Locate above rear traffic advisor, includes handrail (in place of horizontal hosebed handrail).	$550
3330-0135	Handrail on top pump module to be full length as possible. Location: Driver and officer side pump module.	$205
3330-0136	The rear body vertical hand rails extended to top of body.	$119
3330-0137	The side upper rear body handrails extended to rear of body.	$119
3330-0139	Step below side intake / discharge panel (PR). Embossed dia plt with steel supports. Each location requires a minimum of (1) handrail / handhold per NFPA. eMAX only.	$1,308
3330-0152	Handrail 36". Location offset to driver side of body headboard forward of the water tank fill tower(s).	$220
3330-0155	Step rear intermediate. Locate above B1.	$550
3330-0156	Step rear intermediate. Intermediate rear step to be located above the thru the tank storage tunnel.	$550
3330-0158	Step below side intake / discharge panel (PR). Gator grip diamond plate. Each location requires a minimum of (1) handrail / handhold per NFPA. eMAX only.	$1,000
3330-0159	Step rear intermediate. Intermediate rear step to be located above the rear Newton dump.	$550
3330-0160	Handrail 12". Location inboard driver side rear hosebed side angled.	$111
3330-0161	Handrail 12" with angled stanchions. Location: outboard on driver side compartment top 8" off front compartment face.	$111
3330-0165	Handrail 24". Location [#LOC].	$200
3330-0166	Handrail 12". Location: Mount on rear of truck at E-One discretion.	$111
3330-0167	Intermediate rear step to be approximately 10" deep located above the rear Newton dump valve, and be of embossed aluminum treadplate.	$550
3330-0168	Slide-out platform, rollerless. Includes chrome grab handle centered on the front face of the platform (includes hand rail as applicable). Located under right side pump running board.	$1,303
3330-0170	Slideout platform-roller-less. Includes chrome grab handle and retaining pin, centered on the front face of the platform (includes handrail as applicable for body mounted locations) and required step lighting. Located: [#LOC].	$877
3330-0171	Steps rear NFPA compliant. Includes diamond plate corner steps on driver and officer side rear of body for NFPA hose bed access. Includes hand rails mounted vertically on driver and officer side rear beavertails and horizontal below the hose bed (as applicable).	$397
3330-0173	Step bolt on, 19.9" X 8" gator grip stepping surface shall be mounted [#LOC].	$303
3330-0174	Slideout platform-rollerless. Includes chrome grab handle centered on the front face of the platform (includes hand rail as applicable). The platform step to be smooth plate with gator grip painted black durabak. Located [#LOC].	$1,561
3330-0175	Intermediate pump panel step driver side above operator's panel. Includes (2) loop handrails, (1) forward, (1) rearward. Includes step lighting (as applicable). Step light to be switched thru work light in cab.	$1,195
3330-0177	Intermediate pump panel step constructed of 3/16" (.187") aluminum smooth plate with black Scorpion coating (IPOS diamond plate) for rear pump panel.	$511
3330-0179	Steps below side intake / discharge panel (PR). Bustin Tread and diamond plate. Each location requires a minimum of (1) hand rail / hand hold per NFPA. SM SS eMAX only.	$1,000
3330-0182	Step rear intermediate embossed treadplate. Locate above B1, includes handrail (in place of horizontal hosebed handrail).	$550
3330-0183	Step rear intermediate. Locate above B1, includes handrail (in place of horizontal hosebed handrail). Step construction shall be aluminum smooth plate IPO diamond plate painted Black Scorpion (rough finish).	$775
3330-0184	Step rear intermediate. Locate above B2, includes handrail (in place of horizontal hosebed handrail).	$550
3330-0185	Step below side intake / discharge panel (PR). Gator grip plate constructed of 1/8" (.125") aluminum smooth plate with black Scorpion coating (rough finish) IPOS diamond plate. Each location requires a minimum of (1) handrail / handhold per NFPA. eMAX only.	$1,270
3330-0186	Rear handrails. Locate on rear of the body 3x3 and extend from just above the tailboard to the top of the body on the driver and officer sides. In place of standard 48" handrail.	$432
3330-0187	Step rear intermediate. Locate above B1. The step shall be 10" in depth.	$600
3330-0188	Hansen green LED body hand rails upgrade package (includes pump module if applicable).	$1,306
3330-0189	Step rear intermediate embossed treadplate. Locate below fold-a-tank.	$550
3330-0190	Step below side intake / discharge panel (PR). Smooth plate aluminum with gator grip painted black durabak. Each location requires a minimum of (1) handrail / handhold per NFPA. eMAX only.	$1,200

3330-0191	Access ladder. Aluminum extruded ladder with ribbed aluminum extrusion steps located on driver side of pump module offset to the rear. Rear rail to loop up and over to aid in access into/out of dunnage storage pan.	$1,575
3330-0193	Step rear intermediate. Locate below hosebed, includes handrail (in place of horizontal hosebed handrail).	$550
3330-0194	Intermediate Step. An 8" deep x 46" wide non-skid aluminum treadplate step with mitered corners shall be installed above the rear panel compartment door opening for ease of access to the upper body area. The step shall include a Bustin tread insert for increased traction and drainage.	$573
3330-0195	An 8" deep x 38" wide non-skid aluminum treadplate step with mitered corners shall be installed above the rear panel compartment door opening for ease of access to the upper body area. The step shall include a Bustin tread insert for increased traction and drainage.	$566
3330-0196	Additional handrails horizontal above pump panel, below upper pump module (1) driver, (1) officer side. Mount handrails offset to the rear (just forward of folding steps).	$215
3330-0197	Steps NFPA compliant. Fabricated diamond plate steps on driver and officer side of crosswalk.	$397
3330-0198	Intermediate rear step to be approximately 10" deep located above the rear compartment and be of embossed aluminum treadplate.	$550
3330-0199	Steps below body. Located each side below crosswalk.	$452
3330-0201	Step rear intermediate embossed treadplate. Locate below hosebed, includes three (3) hand hold cut-outs on top of the step in place of the hand rail.	$550
3330-0202	Intermediate rear step to be approximately 8" deep located at the rear panel and be constructed of embossed aluminum treadplate.	$477
3330-0206	Step rear 10" intermediate embossed treadplate. Locate below hosebed, includes three (3) hand hold cut-outs on top of the step in place of the hand rail.	$550
3330-0207	Hansen blue LED body hand rails upgrade package (includes pump module if applicable).	$1,306
3330-0208	NFPA hose bed access ladder. Zico model RL18 for increased visibility of rear outboard body mounted DOT/NFPA lighting. Includes required step lights and additional hand rail(s) if applicable. Location: [#LOC].	$2,023
3330-0209	Slide-out platform, rollerless. Includes chrome grab handle centered on the front face of the platform (includes hand rail as applicable). Located below tailboard centered and the step area the same width as the access ladder.	$1,303
3330-0210	Handrail 12". Install 12" handrails on the upper flat section above the speedlays for easier access to the top mount pump panel walkway.	$111
3330-0211	Intermediate pump panel step officers side located rearward of the crosslays. Step to be constructed of embossed aluminum treadplate. Includes step lighting (as applicable). Step lights to be switched thru work light switch in cab.	$839
3330-0212	(2) Dual lighted LED folding steps. Location: Side by side centered on front pump module access door above walkway to aid pump operator in reaching and operating deck gun from crosswalk area. Includes reinforced 3/16" diamond plate pump access door. Each location requires a minimum of (1) handrail per NFPA.	$337
3330-0214	Slidemaster pull out platform shall be mounted in B1 compartment floor.	$1,115
3330-0216	Access ladder. Sure Step V2. Finish: Aluminum. Includes required step lights and additional hand rail(s) if applicable. Location: [#LOC].	$2,345
3330-0219	Step rear intermediate embossed treadplate. Locate below hose bed, to extend rearward from body 12 in. and shall include three (3) hand hold cut-outs on top of the step in place of the hand rail.	$602
3330-0220	Slide-out platform, rollerless. Includes chrome grab handle centered on the front face of the platform (includes hand rail as applicable). Located [#LOC].	$1,303
3330-0222	Rear landing platform (full width) located below hosebed area. Landing platform to be used for hosebed operations and will be embossed diamond plate.	$776
3330-0223	Intermediate rear step to be approximately 10" deep located above the rear compartment and be of embossed aluminum treadplate. Includes side mounted gussets to provide a 500lb weight rating.	$614
3330-0224	Handrails 12". Install (2) 12" Hansen white LED lighted handrails on the upper rear top of body forward of the rear unistruts.	$372
3330-0225	Folding Step. Step to be located 18" above surface of tailboard, and directly below drivers side rear vertical handrail.	$241
3330-0226	Step rear intermediate smooth plate painted black Durabak. Locate above B1, includes handrail (in place of horizontal hosebed handrail).	$688
3330-0228	Step rear intermediate embossed treadplate. Locate above B1, includes three (3) hand hold cut-outs on top of the step in place of the hand rail.	$550
3330-0230	Non-folding 8x8 bolt on surface mount CPI step with LED lighting. CPI model# SP2013-1-D Each location requires a minimum of (1) handrail per NFPA.	$149
3330-0231	Slide-out platform, rollerless to be painted Durabak black. Includes chrome grab handle centered on the front face of the platform (includes hand rail as applicable). Located [#LOC]..	$3,256
3330-0232	Step below side intake / discharge panel (PR) to be painted Durabak black.. Smmoth plate. Each location requires a minimum of (1) handrail / handhold per NFPA. eMAX only.	$1,251
3340-0003	Cast Products recessed fuel fill with door.	$128
3340-0004	Hosebed above the booster tank. Includes forward hosebed and tower(s) cover plate work (as applicable). Hosebed adjustable divider extrusion rearward of the furthest tower is to run full width of the hosebed (as is practical with other hosebed mounted equipment).	$1,602
3340-0005	Step rear intermediate. Includes folding steps on driver side for NFPA hosebed access and handrail mounted on driver side upper hosebed side (as applicable).	$550

3340-0015	Diamond plate single axle wheel well. Includes bolt-on composite wheel well liners and aluminum trim fenderettes.	$1,104
3340-0021	Compartment Heaters installed in [#LOC].	$470
3340-0026	Diamond plate overlay front body. For Stainless Steel product only. To include the entire front body panels. Do not wrap to the door opening.	$406
3340-0027	Diamond plate corner guards for the driver and officer front compartment face. Guards to wrap around the corner and be full height of side assembly or to a max of 96".	$206
3340-0028	Stainless Steel corner guards for the driver and officer front compartment face. Guards to wrap around the corner and be full height of side assembly.	$261
3340-0034	The hinged door(s) of [#LOC] to have door louvers for additional ventalation.	$159
3340-0035	Divider Long. To run full length of hose bed (front to rear).	$487
3340-0036	Body compartment interiors to have a swirled finish. Includes pan or hinged door as applicable.	$2,076
3340-0041	Removable number plate with mounting brackets. Locate [#LOC]. Plate to be painted job color. Lettering and/or graphics not included.	$268
3340-0045	(2) driver side roof top compartments. Includes hinged raised compartment lids with turn latches and grab handle(s). Each lid to have (1) bracket mounted LED light and to be wired to door ajar indicator in cab.	$2,496
3340-0049	Hosebed storage pan. Locate in forward area of hosebed.	$731
3340-0051	Reinforce flooring of compartment [#LOC] for storage of heavy equipment.	$320
3340-0052	Stainless steel trim on bottom edge of compartment opening of [#LOC].	$121
3340-0055	Cast Products recessed fuel fills with doors for dual fuel fill application.	$436
3340-0059	Recessed fuel fills for dual fuel fill application, (1) each side in rear wheel wells.	$248
3340-0060	Diamond plate corner guards for the driver and officer rear compartment face. Guards to wrap around the corner and be full height of side assembly or to a max of 96".	$233
3340-0061	The walls of compartment [#LOC] to have additional louvers for additional ventilation.	$82
3340-0062	Divider medium. To run full length of hose bed (front to rear) behind single fill tower.	$437
3340-0063	Divider short. To run full length of hose bed (front to rear) behind dual fill towers or single set back fill tower.	$367
3340-0067	Turtle Tile Brand [#COL] Floor Matting covering all applicable Compartment Floors, Shelves, and Rollout Trays.	$1,055
3340-0068	Mud flaps, rear, black with Saulsbury logo.	$162
3340-0074	Body mainframe and hosebed side assemblies for a 85" high body.	$1,157
3340-0075	Body mainframe and hosebed side assemblies for a 90" high body.	$2,310
3340-0076	(2) officer side roof top compartments. Includes hinged raised compartment lids with turn latches and grab handle(s). Each lid to have (1) bracket mounted LED light and to be wired to door ajar indicator in cab.	$2,496
3340-0077	Body compartment Interiors to have Zolatone gray finish. To include pan of hinged doors and tool compartments (as applicable). Does not include floors if they are dia plt.	$5,194
3340-0078	Body compartment Interiors and compartment mounted components (shelves, trays, toolboards,etc.) to have Zolatone gray finish. To include pan of hinged doors, and tool compartments (as applicable). Does not include floors if they are dia plt.	$11,017
3340-0080	Bolt-on diamond plate 18" tailboard (full width of body). Includes (2) squared off beavertails (no stanchions) with removable outer panels and handrails- (2) vertical on trailing edge of body and horizontal mounted handrail(s) below hosebed.	$922
3340-0081	Bolt-on diamond plate tailboard (full width of body). Includes handrails- (2) vertically on trailing edge of body and horizontally mounted handrail(s) below hosebed.	$1,231
3340-0082	Bolt-on diamond plate tailboard (full width of hosebed). Includes handrails- (2) vertical mounted on trailing edge of body and horizontal mounted handrail(s) below hosebed.	$695
3340-0083	Bolt-on diamond plate tailboard (full width of rear compartment). Includes the enhanced extended side compartment frame work with diamond plate compartment tops, (1) officer side lower area folding step. Driver side includes (1) upper hosebed mounted handrail (as applicable) and handrails- (2) vertical on trailing edge of body and horizontal mounted handrail(s) below hosebed.	$823
3340-0088	Smooth plate single axle wheel well painted job color. Includes bolt-on composite wheel well liners.	$1,599
3340-0089	Turtle Tile Brand [#COL] Floor Matting covering all applicable Compartment Floors, Shelves, and Rollout Trays.	$1,700
3340-0090	Turtle Tile Brand [#COL] Floor Matting covering all applicable Compartment Floors, Shelves, and Rollout Trays.	$2,315
3340-0093	Mud flaps, rear, black with E-ONE logo.	$161
3340-0094	Body mainframe and hosebed side assemblies for a 95" high body.	$3,465
3340-0095	(2) officer side roof top compartments with extra width to inboard side. Includes hinged raised compartment lids with turn latches, grab handle(s) and gas shock hold open and drain line(s) ran to below body. Each lid to have (1) bracket mounted LED light and to be wired to door ajar indicator in cab.	$4,988
3340-0096	(2) driver side roof top compartments with extra width to inboard side. Includes hinged raised compartment lids with turn latches, grab handle(s) and gas shock hold open and drain line(s) ran to below body. Each lid to have (1) bracket mounted LED light and to be wired to door ajar indicator in cab.	$4,988
3340-0097	Brushed Stainless Steel single axle wheel wells. Includes bolt-on composite wheel well liners and fenderettes.	$1,214
3340-0098	Stainless Steel single axle wheel wells. Includes job color paint, bolt-on composite wheel well liners and fenderettes.	$1,510

3340-0099	Diamond plate overlay rear body. For Stainless Steel product only. To include the entire rear body panels. Do not wrap to the door opening.	$334
3340-0102	Angled (Boston style) style tailboard corners.	$439
3340-0107	Diamond plate tandem axle wheel well. Includes bolt-on composite wheel well liners and fenderettes.	$2,202
3340-0108	Smooth plate tandem axle wheel well painted job color. Includes bolt-on composite wheel well liners and fenderettes.	$3,193
3340-0109	Power vent system located in [#LOC]. Includes timer and is run from shorepower inlet.	$191
3340-0111	Horizontal ladder bracket. Location and type of ladder: [#LOC].	$255
3340-0113	Adjustable ladder brackets. Mount in adjustable tracks on officer side.	$466
3340-0114	Hosebed above the booster tank and side body compartments. Includes forward hosebed and tower(s) cover plate work (as applicable) and extended width side to side (over side compartments) for increased hosebed capacity.	$3,068
3340-0115	Bolt-on diamond plate 16" tailboard (full width of body). Includes (2) squared off beavertails (no stanchions) with removable outer panels and handrails- (2) vertical on trailing edge of body and horizontal mounted handrail(s) below hosebed.	$864
3340-0116	Bolt-on diamond plate 14" tailboard (full width of body). Includes (2) squared off beavertails (no stanchions) with removable outer panels and handrails- (2) vertical on trailing edge of body and horizontal mounted handrail(s) below hosebed.	$803
3340-0117	Bolt-on diamond plate 12" tailboard (full width of body). Includes (2) squared off beavertails (no stanchions) with removable outer panels and handrails- (2) vertical on trailing edge of body and horizontal (as applicable) mounted handrail(s) below hosebed.	$744
3340-0118	Bolt-on diamond plate 10" tailboard (full width of body). Includes (2) squared off beavertails (no stanchions) with removable outer panels and handrails- (2) vertical on trailing edge of body and horizontal mounted handrail(s) below hosebed.	$682
3340-0119	Speedy dry hopper. Locate [#LOC]. Includes discharge chute in compartment directly below roof top compartment with close off valve and extension hose for ground level dispensing. Capacity of speedy dry hopper is 200 lbs.	$1,551
3340-0121	Full length driver side tunnel. Reduces driver side upper compartment depths to 12" deep IPO 26". Tunnel includes access door at rear.	$1,398
3340-0122	Half length driver side tunnel. Reduces driver side upper compartment depths of L2 and L3 to 12" deep IPO 26".	$872
3340-0124	Upgrade runningboards to 3/16" diamond plate.	$92
3340-0125	Recess mounting for directional light bar. Located on rear area of body.	$394
3340-0126	Diamond plate single axle wheel well. Includes fenderettes and bolt-on stainless steel wheel well liners.	$2,821
3340-0127	Body mainframe and hosebed side assemblies for a 77" high body.	$696
3340-0128	Bolt-in partition walls. Locate in lower rear compartment transverse area. Partitions to separate the side rear compartments from the rear compartment.	$231
3340-0131	Diamond plate hose storage box. Locate on driver side compartment top. Hosebed side to be the inside edge of box for maximum storage. Use .090 overlay on hosebed side to protect paint and rear 3x3 extrusion. Box to include a 3" radius rear corner, removable slat flooring and a cargo net top and rear.	$729
3340-0132	Diamond plate single axle wheel well. Includes fenderettes and bolt-on aluminum wheel well liners painted job color.	$2,202
3340-0133	Officer side beavertail to have recess box (9"w x 14"H x depth of beavertail). Box to be mounted low flush with top of tailboard.	$406
3340-0135	Body mainframe and hosebed side assemblies for a 73" high body.	$1,619
3340-0136	Bolt-on diamond plate 20" tailboard (full width of body). Includes (2) squared off beavertails (no stanchions) with removable outer panels and (3) 48" handrails- (2) vertically on beavertails and (1) horizontally below hosebed.	$984
3340-0137	Body mainframe and hosebed side assemblies for a 92" high body.	$2,771
3340-0139	Bolt-on diamond plate 18" tailboard (full width of body). Includes (2) slanted beavertails (no stanchions) with removable outer panels and handrails- (2) vertically on trailing edge of body and horizontally mounted handrail(s) below hosebed.	$1,153
3340-0140	Hosebed above the booster tank. Includes forward hosebed and tower(s) cover plate work (as applicable). Adjustable track rearward of the fill tower(s) to run full width of the hosebed area.	$1,793
3340-0141	Label package for Memphis units only, to include labeling of removable panels to indicate what is behind.	$97
3340-0142	Crosslay roller 18". Mount driver side front compartment face just below compartment top.	$149
3340-0143	Interior ladder tunnel door. Locate in B1 inline with ladder tunnel thru tank. Hinge to officer side with D-Ring latch and driver side to be notched for cord reel.	$419
3340-0144	Stainless Steel floor overlay. B1/R1 full width.	$273
3340-0145	Rub rail for the body and pump area module(s).	$742
3340-0146	Stainless steel rubrail for the body and pump area module(s).	$1,479
3340-0147	Louver Guards. All lower body compartment louvers to have protective guard provided on exterior of compartments. Guards to prevent road spray from entering compartments.	$528
3340-0148	Body and Cab logos (exterior large and small logos) to be mounted at final inspection.	$742
3340-0149	Transverse Module (full width). Locate forward of pump area. Includes a single compartment opening per side (with a shallow lower area and a transverse upper area with diamond plate flooring) and upper area for single stacked double crosslay with backboard storage.	$3,909
3340-0150	Dri-Dek brand [#COL] floor matting covering all applicable compartment floors, shelves, and rollout trays.	$984

3340-0151	Dri-Dek Brand [#COL] floor matting covering all applicable body compartment floors, shelves, and rollout trays.	$1,629
3340-0152	Dri-Dek brand [#COL] floor matting covering all applicable compartment floors, shelves, and rollout trays.	$2,245
3340-0153	Hosebed storage pan diamond plate lids (2) lids. Officer side lid to run just under the ladder rack in the stored position. The driver side to be as large as possible with remaining space. Each hinged to rear of pan. Includes (1) gas shock hold open and push-button latches. Included in the pan are vertical "L" shaped partion walls located next to inboard side of fill towers. Seal partitions to keep water from entering from the outboard psoition.	$690
3340-0154	Mud flaps, rear, black with no logo.	$161
3340-0158	Underbody splash guard behind rear axle mounted to body.	$521
3340-0165	Bracket pac trac jumbolok p/n 1070 PT. To hold (2) pike poles (1) 6ft and (1) 10ft. To be located on officer side compartment top.	$267
3340-0166	Bolt-in partition wall. Locate in [#LOC].	$215
3340-0173	Backboard storage box. Located in the officer side of the hosebed (full length). Includes vertically hinged door (wired to door ajar) w/push-button latch and composite flooring. Box to hold: (2) backboards. The box to have an open area (top access) to the rear of the backboards in remaining hosebed area.	$497
3340-0176	Swirl plate single axle wheel well with clear coat finish. Includes bolt-on composite wheel well liners.	$1,696
3340-0180	Brushed stainless steel overlay front body. For Stainless Steel product only. To include the entire front body panels. Do not wrap to the door opening.	$605
3340-0181	Each lid to have (1) additional bracket mounted light. This is in addition to light that comes standard for total of (2) lights per compartment.	$150
3340-0182	Brushed stainless steel single axle wheel well. Includes bolt-on stainless steel wheel well liners and fenderettes.	$2,422
3340-0184	Diamond plate box for directional lightbar and (2) GH scene lights. Box to be mounted on 3" x 3" aluminum angle at rear of hosebed storage pan. Lights to be surface mounted to box.	$556
3340-0185	Hosebed divider(s) to be notched for hosebed preconnects. Notch to be large enough for divider(s) to be adjustable over preconnects.	$149
3340-0186	Recessed storage compartment located between driver side upper and lower compartments. Compartment to hold dealer supplied and installed back up tether and plug.	$402
3340-0187	Sign "Stay Back 150 Metres" with black reflective lettering. Locate below rear of body.	$132
3340-0189	Seattle Body. Includes all body doors (hinged doors to have magnetic door ajar includes TM walkway tool cmpts, side body roll-up doors (as applicable) to be painted job color), B1 to be notched on (8" wide x 3" high) D-Ring door (door to have no gas shock, to be plunger style), hosebed, rear int. step 10" wide IPOS with (2) lower folding steps (no upper steps), Zico drop down rack (hat brackets to be reduced in depth to pull ladders closer inboard), ladder rack to include audible alarm same as last units, vertical partition in B1 compt was deleted from units. L3/R3 extended areas to have flush floors. Unit to have old style shelf tracking. Tracks to be ran to compartment floor to just below roll-up door from compartment ceiling. All compartment floors to be 3/16" smooth plate IPOS diamond plate.	$35,580
3340-0190	Diamond Plate Hosebed Storage Pan Cover. Includes (1) D-ring latch and gas shock(s). Hinge to the rear of the hosebed storage pan. Cover to open to 90 degrees.	$1,022
3340-0191	Divider Support to run full width of hosebed (side to side) at the front of the hosebed and towards the rear of the hosebed at top of the divider(s). Attach to each hosebed divider to provide additional support.	$333
3340-0192	Storage box ceiling mounted in transverse of L3/R3.	$439
3340-0193	Pumper Body, Pump Module and Cab Tags in French to replace standard English E-One supplied Tags.	$1,498
3340-0194	Bolt-on diamond plate tailboard (full width of rear compartment) for use with low hosebed. Includes driver side (1) upper hosebed mounted handrail (as applicable), handrail(s) mounted horizontally below hosebed and (2) handrails mounted vertically on trailing edge of body.	$823
3340-0197	The following compartments to be full height and full depth L1, L2, R1.	$875
3340-0198	Rear diamond plate vertical hinged door on driver side roof top compartments. Includes thumb latch and wiring for door ajar switch.	$179
3340-0199	Hosebed storage box for 17' Little Giant Ladder to be vertically stored. Includes vertically hinged door (wired to door ajar) with push-button latch. Located in driver side of hosebed.	$870
3340-0200	Removable slat flooring. Location: [#LOC]	$265
3340-0207	Piping cover to be located in compartment [#LOC]. Includes compartment wall cut-outs for piping.	$447
3340-0210	Brushed stainless steel overlay rear body. For Stainless Steel product only. To include the entire rear body panels. Do not wrap to the door opening.	$605
3340-0211	Painted smooth plate overlay rear body. For Stainless Steel product only. To include the entire rear body panels. Do not wrap to the door opening.	$1,867
3340-0212	Diamond plate access door in dunnage pan for access to plumbing in pump module. Includes push button latches.	$326
3340-0213	L shaped partition located in hosebed to protect the fill towers.	$342
3340-0214	Smooth plate outboard beavertail panels (PR). Painted job color.	$521
3340-0215	Divider Long. To run full length of hosebed (front to rear). Divider height to half of hosbed depth (top to bottom). For use with low hosebed configurations only.	$487
3340-0216	Body mainframe and upper body/hosebed side assemblies for a 90" high body.	$639
3340-0217	The upper outboard panels of the speedlay module, the wheel well and the rear end upper/lower rearward facing panels to smooth plate overlays. These area are to be seamless and painted job color.	$4,174

3340-0218	Sign "Stay Back 500FT". White plate with red reflective lettering. Locate low on rear of body / body doors.	$132
3340-0219	Body and hosebed storage pan pump access panel package. Includes removable access panels in upper forward area of L1/R1 and a large removable access panel in floor of the hosebed storage pan.	$577
3340-0220	Body compartment Interiors to have Zolatone black finish. To include pan of hinged doors (as applicable). Does not include floors if they are dia plt.	$5,194
3340-0221	Body compartment Interiors and compartment mounted components (shelves, trays, toolboards,etc.) to have Zolatone black finish. To include pan of hinged doors (as applicable). Does not include floors if they are dia plt.	$11,017
3340-0223	Stainless Steel corner guards for the driver and officer rear compartment face. Guards to wrap around the corner and be the height of the top of the tail lights.	$249
3340-0224	(1) officer side rear pump module extra width (inboard side) roof top compartment (offset rearward and sized to accommodate electric reel). Includes hinged raised compartment lid with push-button latches and grab handle(s). Compartment to have (1) bracket mounted LED light and wired to door ajar indicator in cab. Forward area to be open for general location of deck gun (open to walkway area). Outboard side of body to run full width and wrap around the rear and meet with the end of the hosebed walkway end (rearward facing plate work to match rear of body as applicable).	$2,181
3340-0225	Stair case module (full width of body). Includes large compartment area with lower storage area and upper area dunnage pan. Stair case located to [#LOC].	$8,529
3340-0226	Special hosebed configuration. (1) long divider driver side on top of discharge box 4.25" from hosebed side. (1) short divider officer side on top of discharge box 5.625" from hosebed side. (1) short divider officer side up against discharge box 8.875" from hosebed side. (1) short divider officer side 14.625" from hosebed side. (2) short dividers officer side 14" high, (1) divider 21.375" in from hosebed side and (1) divider 28.125" in from hosebed side. Includes bolt-in vertical partition from right side hosebed wall to center divider, 84" from rear of hosebed. Remaining area forward of partition to be used for storage area. Includes hinged shelf in hosebed over the (2) 14" high dividers hinged on right side 20" wide x 84" long. Includes hosebed dividers and discharge cover boxes.	$3,388
3340-0227	Divider Long. To be split for rear mount hosebed application. Main body hosebed divider to be squared on both ends. Rear hosebed divider to have radius end.	$728
3340-0228	Storage area for misc. equipment located above the upper speedlay compartment on driver side rear. Includes divider with (2) 6' pike pole with D-Handle and two small shovels (remaining space with pike poles high-approx. 5' foot deep). Includes smooth plate door with push button latch.	$2,061
3340-0229	Speedy Dry Hopper. Locate [#LOC]. Includes discharge chute in compartment directly below roof top compartment with close off valve and extension hose for ground level dispensing. Capacity of speedy hopper is 50 lbs.	$1,163
3340-0230	(4) Removable aluminum trays for the rear preconnects. The (2) driver and (1) officer upper trays to hold 200' of 1.75" DJ hose. The (1) officer lower tray to hold 150' of 3" DJ hose (tray will be longer front to rear for capacity). Each tray is removable from the rear of the body and include handhold cut outs on each side (4 total) and (2) handrails mounted side to side and placed 13" back from tray edge.	$1,560
3340-0231	Nylon black cargo net(s) in interior compartment opening(s) behind lift-up doors of [#LOC]. Cargo net(s) to be held in place at top between two (2) pieces of flat bar, through-bolted. Cargo net(s) to be held in place at bottom with twist-locks outboard and snaps inboard. Two (2) velcro straps to be installed: (1) on rear of flat bar and (1) on cargo net to hold in place for compartment access.	$659
3340-0232	Directional Lightbar Box. Located on rear area of body between upper rear hosebed side tubes. Box to be diamond plate.	$568
3340-0233	Speedy Dry Hopper. Locate roof top compartment above R3. Includes discharge chute in compartment directly below roof top compartment with close off valve and extension hose for ground level dispensing. Capacity of speedy hopper is 68 lbs.	$1,212
3340-0234	Divider Long. To run full length of hosebed (front to rear). Rear of divider to have cut at 45 degree angle and hand hold cutout at 45 degree angle.	$487
3340-0235	Rubrail for the body and pump area module(s). Rubrail for rear of tailboard not included.	$742
3340-0236	Center hose bed walkway. Non-slip diamond plate walkway to run full length of hose bed.	$1,360
3340-0237	Speedy Dry Hopper. Locate dunnage pan on officer side. Locate control on officer side pump panel, plumbing to terminate approx. 20" above runningboard. Includes 2.5" Akron ball valve to control plow and provide cap. Includes snubber valve control of air to assist feed of speedy dry and a trash screen to in top of hopper. Capacity of speedy hopper is 200 lbs.	$2,842
3340-0240	Hydraulic hose cover. Removable cover located in the dunnage pan to protect hydraulic hose from damage.	$286
3340-0241	Rear diamond plate vertical hinged door on officer side roof top compartments. Includes thumb latch and wiring for door ajar switch.	$179
3340-0242	Diamond plate storage box with hinged lid w/push button latches. Located in hosebed storage pan to be approx. 36"W x 60"L x 18"H.	$1,620
3340-0243	Hose storage tray located on officer side compartment top. Tray to be full length of compartment top and have drainage slots on bottom of tray. Includes cargo net cover.	$1,726
3340-0244	Locking push button latches to match body compartment door locks. Locate (2) on ladder storage door, (1) on each backboard storage door (if applicable), (1) on microphone box (if applicable), (1) on each pike pole door (if applicable) and (1) on each SCBA bottle storage door.	$62
3340-0245	Nylon black cargo net(s) over exterior compartment opening(s) [#LOC]. Cargo net to be held in place with twist-locks.	$537

3340-0247	Hosebed storage pan partition. Partition to be located forward of generator and water/foam fill towers.	$310
3340-0248	Hosebed Storage Pan. Locate in forward area of hosebed. Extra width front to back for equipment, generator and fill tower storage.	$1,461
3340-0251	Half length driver side tunnel. Reduces driver side upper compartment depths of L2 and L3 to 12" deep IPO 26". Includes cut-out in hosebed side wall in forward area of L2. Cut-out to forward of Little Gaint sleeve. Includes cover plate with push button latches.	$2,001
3340-0252	Bolt-in floor R2. Floor is in addition to the existing DP floor. Floor to have 2" raised forward area (tapered towards rear for securing cribbing) and run full length front to rear.	$218
3340-0253	Backboard storage compartment. Locate in officer side ladder tunnel. Rack to be approx 2" wide.	$408
3340-0255	Hosebed storage pan partition. Partition to seperate the booster reel from rest of pan.	$310
3340-0258	A deflector shield will be placed in front of the light tower or A/C system. Deflector will be in front of the forward most component.	$919
3340-0259	(1) officer side transverse module extra width (inboard side) roof top compartment. Includes hinged raised compartment lid with turn latches and grab handle(s). Compartment to have (1) bracket mounted LED light and wired to door ajar indicator in cab.	$2,181
3340-0260	Transverse module (full width and height of body) with lower storage areas and frame width transverse floor (compartment opening 48" wide and same height as main body compartments). Includes open front storage pan to driver side (same depth as staircase storage pan), transverse (front to rear) walkway area (inline with staircase and main body).	$5,962
3340-0261	Stair case module (full width of body). Includes large compartment area with lower storage area and upper area open back storage pan. Stair case located to [#LOC].	$8,529
3340-0262	(1) transverse storage pan roof top type compartment. Locate to inboard side (access from walkway). Compartment top and walls (diamond plate) to be bolt-in type and spaced to allow required air-flow for generator. Lid to be raised with push button latches (like roof top compartment lids) with gas shock hold open and includes one bracket mounted LED light.	$2,071
3340-0264	License plate sized number plate. Locate in license plate bracket(s). Plate to be painted job color. Lettering and/or graphics not included.	$209
3340-0265	Diamond plate fill tower deflector. Locate around fill tower located in hosebed storage pan. To be four sided and bolt-in for removing and to be height of pan.	$326
3340-0268	(1) staircase module storage pan roof top type compartment. Locate to inboard side (access from walkway). Compartment top and walls (diamond plate) to be bolt-in type. Lid to be raised with push button latch (like roof top compartment lids) with gas shock hold open and includes one bracket mounted LED light.	$1,017
3340-0271	Nylon black cargo net in interior compartment opening behind door(s) of [#LOC]. Cargo net to be mechanically attached to bottom of compartment opening and bungee cords in the top corners.	$537
3340-0272	Sign "Stay Back 500FT" with black reflective lettering. Locate B1 door above D-ring.	$132
3340-0276	Hosebed divider(s) to be notched. Notch(es) to be 24" wide x 24" high at the upper front corner of the divider(s).	$257
3340-0279	Hosebed above the booster tank. Includes forward hosebed with notch for boom support, deflector for boom support and tower(s) cover plate work. Hosebed adjustable divider extrusion rearward of the furthest tower is to run full width of the hosebed.	$1,602
3340-0280	Divider Long. To run full length of hosebed (front to rear). Locate on top of hard suction storage in hosebed.	$487
3340-0284	The hosebed divider(s) to be notched on the rearward end for nozzle(s).	$257
3340-0285	Bolt-in partition wall. Locate in centered (front to back) in driver side roof top compartment.	$321
3340-0290	Full width partition(s) located in hosebed rearward of the fill tower(s).	$525
3340-0291	Removable number plate with mounting brackets. Locate [#LOC]. Plate to be painted job color. Plate to be 8"W x 20"H. Lettering and/or graphics not included.	$380
3340-0292	Smooth plate single axle wheel well painted job color. Includes bolt-on composite wheel well liners. Wheel well plate(s) to be flush mounted.	$3,698
3340-0293	Crosswalk and Speedlay module compartment Interiors to have Zolatone gray finish. Does not include floors if they are dia plt.	$698
3340-0294	Recessed fuel fill officer side wheel well.	$290
3340-0295	(1) driver side rear pump module extra width (inboard side) roof top compartment (offset rearward and sized to allow deck gun to stow without interfering with hosebed area). Includes hinged raised compartment lid with turn latches and grab handle(s). Compartment to have (1) bracket mounted LED light and wired to door ajar indicator in cab. Outboard side of body to run full width and wrap around the rear and meet with the end of the hosebed.	$2,181
3340-0296	(1) driver side transverse module extra width (inboard side) roof top compartment (offset rearward). Includes hinged raised compartment lid with turn latches and grab handle(s). Compartment to have (1) bracket mounted LED light and wired to door ajar indicator in cab. Forward area to be open for general location of items in forward transverse pan.	$2,181
3340-0297	(1) officer side transverse module extra width (inboard side) roof top compartment (offset rearward). Includes hinged raised compartment lid with turn latches and grab handle(s). Compartment to have (1) bracket mounted LED light and wired to door ajar indicator in cab. Forward area to be open for general location of items in forward transverse pan.	$2,181
3340-0298	(1) officer side rear pump module extra width (inboard side) roof top compartment. Includes hinged raised compartment lid with turn latches and grab handle(s). Compartment to have (1) bracket mounted LED light and wired to door ajar indicator in cab. Outboard side of body to run full width and wrap around the rear and meet with the end of the hosebed end.	$2,495

3340-0299	Transverse module (full width and height of body) with lower storage areas (compartment opening 67" wide and same height as main body compartments). Includes full width forward storage pan and a pan in the rearward center/officer area between the driver roof top compartment. Transverse floor to run full width. Rear headboard to have area for routing of plumbing for preconnects located in rearward area.	$7,011
3340-0300	(1) officer side rear pump module roof top compartment. Includes hinged raised compartment lid with turn latches and grab handle(s). Compartment to have (1) bracket mounted LED light and wired to door ajar indicator in cab. Outboard side of body to run full width and wrap around the rear and meet with the end of the hosebed end.	$1,248
3340-0301	Special hosebed configuration. First hosebed divider to be 12" off driver side hosebed side, to have fixed shelf centered vertically between hosebed side and hosebed divider, includes (1) long divider centered on top of fixed shelf. Second hosebed divider to be 18.25" off driver side hosebed side, to have fixed shelf centered vertically between first and second hosebed dividers. Both fixed shelves to run full length of dividers.	$1,212
3340-0303	(1) driver side rear pump module roof top compartment. Includes hinged raised compartment lid with turn latches and grab handle(s). Compartment to have (1) bracket mounted LED light and wired to door ajar indicator in cab. Outboard side of body to run full width and wrap around the rear and meet with the end of the hosebed end.	$1,248
3340-0305	Body mainframe and hosebed side assemblies for a 90" high body. Includes modifications for 4x4 and plumbing applications as required.	$2,886
3340-0306	Speedy Dry Hopper. Locate [#LOC]. Includes discharge chute in compartment directly below roof top compartment with close off valve and extension hose for ground level dispensing. Capacity of speedy hopper is 100 lbs.	$1,551
3340-0307	Stop bracket. Bracket to be located approx 125" back from door opening on rear compartment face of the roof top compartment.	$30
3340-0309	Sign "Keep Back 300FT". White plate with red reflective lettering. Locate on rear ladder access door.	$132
3340-0311	Two dividers in hosebed storage pan with adjustable tracks to move fore and aft in pan. Each divider to be full height and depth of dunnage area.	$915
3340-0312	(1) driver side rear pump module roof top compartment. Includes hinged raised compartment lid with turn latches and grab handle(s). Compartment to have (1) bracket mounted LED light and wired to door ajar indicator in cab. Outboard side of body to run full width and wrap around the rear and meet with the end of the hosebed end.	$1,248
3340-0313	Locate Foam Fill Tower in the hosebed storage pan. Water Fill Tower located in the hosebed.	$421
3340-0319	Bolt-on diamond plate 10" tailboard (full width of body). For use with rear ladder application. Includes handrails- (1) vertical on trailing edge of body opposite side of ladder and handrail(s) horizontal below hosebed.	$888
3340-0320	Locate Tank Fill Tower(s) in the hosebed area. For use with hosebed storage pan for max storage pan capacity.	$743
3340-0321	Driver side hosebed storage box. Storage box to hold (3) pike poles and (3) backboards. Pike poles to be stored down low. Backboards to be stored up high with dividers seperating storage for each board. Includes vertically hinge hinged door (wired to door ajar) with D-ring latch.	$1,308
3340-0322	Diamond plate deflector shield for Light Tower. Deflector to be mounted to forward area of hosebed storage pan. Includes cross mounting structure in hosebed storage pan for Light Tower mounting.	$1,259
3340-0323	Partitions to seperate the side rear compartments from the rear compartment to be pop riveted into place.	$55
3340-0324	Body mainframe and hosebed side assemblies for a 98" high body.	$4,159
3340-0327	Heat Pan for rear mount pump application. Includes notching for tow eyes and rear hitch receiver (as applicable). Pan to not interfere with the connections of any towing hooks.	$2,084
3340-0330	Transverse module (full width and 95" high) with lower storage areas (compartment opening 40" wide and same height as main body compartments). Includes storage pan inboard of driver side roof top compartment. Transverse floor to run full width. Rear headboard to have area for routing of plumbing for preconnects located in rearward area.	$7,011
3340-0331	Transverse module (full width and 95" high) with lower storage areas (compartment opening 25" wide and same height as main body compartments). Includes upper dunnage pan, transverse floor to run full width. Rear headboard to have area for routing of plumbing for preconnects located in rearward area.	$8,437
3340-0332	Full width hosebed above the booster tank and rear mounted pump. Includes forward hosebed and tower(s) cover plate work (as applicable). Hosebed adjustable divider extrusion rearward of the furthest tower is to run full width of the hosebed.	$2,155
3340-0333	Ribbed extrusion for additional divider support to be welded around the top and rearward edges of hoesbed divider(s).	$348
3340-0334	(2) Removable aluminum trays for the officer rear preconnects. The (1) officer upper tray to hold 200' of 1.75" DJ hose. The (1) officer lower tray to hold 200' of 2.5" DJ hose (both trays sized the same and to take the full R3 interior compartment width). Each tray is removable from the rear of the body and includes handhold cut outs on each side (4 total) and (2) handrails mounted side to side and placed 13" back from tray edge.	$781
3340-0335	Cast Products pass thru with door. There will be a pass thru from the outside of the truck to the inside for wires. Locate [#LOC].	$128
3340-0338	(1) driver side rear pump module extra width (inboard side) roof top compartment. Includes hinged raised compartment lid with turn latches and grab handle(s). Compartment to have (1) bracket mounted LED light and wired to door ajar indicator in cab. Outboard side of body to run full width and wrap around the rear and meet with the end of the hosebed end.	$2,495

3340-0339	(1) driver side transverse module extra width (inboard side) roof top compartment. Includes hinged raised compartment lid with turn latches and grab handle(s). Compartment to have (1) bracket mounted LED light and wired to door ajar indicator in cab.	$2,181
3340-0340	Backboard storage box. Located in [#LOC]. Includes sanded smooth plate exterior with smooth plate interior with (1) velcro strap on each end. Sized to hold (2) backboards.	$494
3340-0341	Diamond plate raised cover with rubber hold-downs. Locate forward area of dunnage pan above transverse compartment. Hinge forward and wire to door ajar incicator in cab. Includes (1) bracket mounted LED light.	$515
3340-0343	Body mainframe and hosebed side assemblies for a 95" high body. Includes height of rear body/pump module.	$1,157
3340-0344	Hosebed above the booster tank and rear pump. Includes forward hosebed and tower(s) cover plate work (as applicable). Hosebed adjustable divider extrusion rearward of the furthest tower is to run full width of the forward hosebed.	$1,602
3340-0345	Hosebed above the booster tank and rear pump. Includes forward hosebed and tower(s) cover plate work (as applicable). Hosebed adjustable divider extrusion rearward of the furthest tower is to run full width of the hosebed.	$1,145
3340-0346	Hosebed above the booster tank and rear pump. Includes forward hosebed and tower(s) cover plate work (as applicable). Hosebed adjustable divider extrusion rearward of the furthest tower is to run full width of the hosebed.	$1,442
3340-0348	Divider Short. To be split for rear mount hosebed application. Main body hosebed divider to be squared on both ends. Rear hosebed divider to have radius end.	$630
3340-0349	Divider Medium. To be split for rear mount hosebed application. Main body hosebed divider to be squared on both ends. Rear hosebed divider to have radius end.	$679
3340-0350	Hosebed Storage Pan (24" front to rear). Locate in forward area of hosebed.	$443
3340-0351	Hosebed Storage Pan (40" front to rear). Locate in forward area of hosebed.	$731
3340-0354	(1) officer side rear pump module extra width (inboard side) roof top compartment (offset rearward and sized to allow deck gun to stow without interfering with hosebed area). Includes hinged raised compartment lid with turn latches and grab handle(s). Compartment to have (1) bracket mounted LED light and wired to door ajar indicator in cab. Outboard side of body to run full width and wrap around the rear and meet with the end of the hosebed.	$2,181
3340-0355	(1) officer side rear transverse module roof top compartment. Includes hinged raised compartment lid with turn latches and grab handle(s). Compartment to have (1) bracket mounted LED light and wired to door ajar indicator in cab.	$1,248
3340-0356	(1) driver side rear transverse module roof top compartment. Includes hinged raised compartment lid with turn latches and grab handle(s). Compartment to have (1) bracket mounted LED light and wired to door ajar indicator in cab.	$1,248
3340-0357	Body mainframe and hosebed side assemblies for a 85" high body. Includes modifications for 4x4 and plumbing applications as required.	$1,445
3340-0358	Backboard storage sleeve for (1) board. 4"H x 20"W x 76"L. Includes (2) retaining straps, (1) each side for boards. Location: Horizontally mounted through L3/B1/R3.	$671
3340-0359	Backboard storage box. Located in [#LOC]. Includes sanded smooth plate exterior with smooth plate interior with (1) velcro strap on each end. Sized to hold (3) backboards and spaced 3" per space.	$741
3340-0360	Access panel on back wall of compartments L3 and R3 for access to the jet dump and rear tank inlet plumbing.	$263
3340-0362	Black Dri-Deck flooring to be installed on floor of the backboard storage, hosebed storage pan and both medical cabinets.	$1,200
3340-0363	Hosebed Storage Pan. Locate in forward area of hosebed. Pan to be 30" wide.	$942
3340-0364	Diamond Plate Hosebed Storage Pan Cover. Cover to be split due to ladder rack for access when in stowed position. Includes D-ring latches and gas shock(s). Hinge to the rear of the hosebed storage pan.	$1,546
3340-0365	Hosebed deflector divider. Locate to driver side rear of hosebed forward of deck gun. Deflector to only cover the forward and side of the deck gun piping. Rear area fo hosebed to be open for access from driver side rear.	$325
3340-0366	Seattle Body (RevB). Includes all body doors (hinged doors to have plunger style door ajar including TM walkway tool cmpts), side body roll-up doors (as applicable) to be painted job color, B1 to be smooth plate doors with smooth plate panels outboard, to be notched on (8" wide x 3" high) D-Ring door (both doors to have plunger style hold opens- NO GAS SHOCKS), B2 to have diamond plate drop down door with diamond plate panels outboard, hosebed, rear int. step 10" wide IPOS with (2) lower folding steps with handrails (no upper steps), Zico drop down rack (hat brackets to be reduced in depth to pull ladders closer inboard), ladder rack to include audible alarm same as last units. L3/R3 extended areas to have flush floors. Unit to have old style shelf tracking. Tracks to be ran to compartment floor to just below roll-up door from compartment ceiling. All compartment floors to be 3/16" smooth plate IPOS diamond plate. Includes aluminum multiplex covers in compartment L3/R3 IPOS ABS covers.	$36,289
3340-0367	Sign "NO STEP". White vinyl background with red reflective lettering. Locate (1) each forward and rearward on each of the hosebed cover doors.	$132
3340-0370	Body mainframe and hosebed side assemblies for a 80" high body. Includes modifications for 4x4 and plumbing applications as required.	$290
3340-0371	Crosswalk module compartment Interiors to have Zolatone gray finish. Does not include floors if they are dia plt.	$350
3340-0373	The R1 compartment to have smooth plate floor and compartment walls to be non-louvered.	$277
3340-0374	Sign "Stay Back 300FT" with black reflective lettering. Locate below rear of body.	$132

3340-0376	Diamond plate single axle wheel well. Includes fenderettes and bolt-on aluminum wheel well liners sanded finish.	$1,992
3340-0386	Mateflex brand [#COL] floor matting covering all applicable compartment floors, shelves, and roll-out trays.	$1,700
3340-0387	Full width of hose bed stainless steel transverse storage divider. Located in forward area of hose bed to separate equipment items such as a generator, etc. from the main hose storage area. Main hose bed dividers will be located rearward of the transverse divider.	$731
3340-0388	Brushed stainless steel rubrails for the sides of the body below the lower side compartments.	$742
3340-0389	Stainless steel rear fender panels painted job color. (Recommended for FRP paint process compatibility!) Includes bolt-on stainless steel inner wheel well liners (not painted) and polished stainless steel outer fenderettes.	$1,599
3340-0390	Stainless steel rear fender panels with aluminum treadplate overlays IPO painted finish. Includes bolt-on stainless steel wheel well liners (not painted) and polished stainless steel outer fenderettes.	$1,214
3340-0391	Body mainframe and hosebed side assemblies for a 83" high body.	$1,157
3340-0392	Underbody full width mudflap behind rear axle (as applicable) mounted to body.	$614
3340-0394	Hosebed Storage Pan (36" front to rear). Locate in forward area of hosebed.	$659
3340-0395	Pike pole storage box. Located in the officer side of the hose bed (full length). Includes vertically hinged door (wired to door ajar) w/push-button latch. Box to hold: (4) 10' pike poles.	$1,347
3340-0396	A deflector shield will be placed in front of the light tower or A/C system. Deflector will be in front of the forward most component. Deflector will be painted [#COL].	$1,145
3340-0403	Diamond plate side dump panels. Includes lift-up diamond plate doors with spring loaded hinges.	$443
3340-0404	Smooth plate side dump panels. Includes lift-up smooth plate doors with spring loaded hinges. Smooth plate panels painted job color.	$843
3340-0405	Sign, "STAY BACK 500 FEET" with black reflective lettering. Locate below rear of body.	$132
3340-0406	Sign "Stay Back 150 Metres" with black reflective lettering. Locate below rear of body.	$132
3340-0407	Hosebed above the booster tank. Hosebed assembly to be 3-piece design due to stepped hosebed. Includes forward hosebed and tower(s) cover plate work (as applicable). Hosebed adjustable divider extrusion rearward of the furthest tower is to run full width of the hosebed.	$2,126
3340-0408	Adjustable ladder brackets. Locate in adjustable track [#LOC].	$482
3340-0409	Adjustable tracks (pair). Locate tracks to [#LOC] assembly. For use with ladder and/or hard suction rack(s).	$190
3340-0412	Bolt-on diamond plate 24" tailboard (full width of body). Includes (2) squared off 12" deep beavertails (no stanchions) with removable outer panels and handrails- (2) vertical on trailing edge of body and horizontal mounted handrail(s) below hosebed. For use with swivel style rear tank dump only.	$1,088
3340-0413	Wheel Chocks 44" NFPA Complaint - Pair of Zico SAC-44. Up to 44" diameter Tires. Includes mounting bracket. Locate [#LOC].	$638
3340-0414	Body main frame and 46" wide hose bed for a 90" high rescue pumper body.	$2,310
3340-0415	Body main frame and 46" wide hose bed for a 97" high rescue pumper body.	$3,465
3340-0416	Removable number plate with mounting brackets. Locate driver side outboard of B1. Plate to be painted job color. Plate to be 10"W x 10"H. Lettering and/or graphics not included.	$268
3340-0417	Removable number plate with mounting brackets. Locate driver and officer side of the cab below canopy window. Plate to be painted job color. Plate to be 12"W x 12"H. Lettering and/or graphics not included.	$268
3340-0420	Smooth plate panels of body interior compartments to have zolatone (gray) finish.	$3,537
3340-0455	Reinforce compartment [#LOC] for storage of heavy equipment. The compartment to be capable of storing up to 1000lbs of equipment.	$320
3340-0460	Body main frame and hose bed side assemblies for a 78" high body with low hose bed and "L" shaped water tank.	$1,312
3340-0461	Body main frame and hose bed side assemblies for an 83" high body with low hose bed and "L" shaped water tank.	$1,575
3340-0467	Roof top compartment Interiors to have Zolatone gray finish.	$1,876
3340-0470	The outboard panels of the roof top compartments to be smooth plate overlays. These areas are to be seamless and painted job color.	$2,599
3340-0472	Compartment floors to be flush for sweep out.	$613
3340-0476	Stainless steel tandem axle rear fender panels painted job color. Includes bolt-on stainless steel wheel well liners (not painted) and polished stainless steel outer fenderettes.	$2,099
3340-0482	Roof top compartments on driver and officer side to have 1" drain holes with tubing and plugs.	$263
3340-0483	Divider Long. To run full length of hose bed (front to rear). Divider 3/4 height of hose bed depth (top to bottom). For use with low hose bed configurations only.	$487
3340-0484	Body mainframe and hosebed side assemblies for a 92" high body.	$2,310
3340-0485	Body mainframe and hosebed side assemblies for a 95" high body. Includes modifications for 4x4 and plumbing applications as required.	$4,158
3340-0486	Diamond plate single axle wheel well. Includes bolt-on composite wheel well liners and bolt-on polished alum fenderettes.	$1,000
3340-0488	Divider long for use with hosebed preconnect. Divider to be set back and/or notched at forward area of hosebed for access to preconnect line connection.	$487
3340-0490	Sign "Stay Back 15 Meters" with black reflective lettering. Locate below rear of body.	$132
3340-0493	Sign "Keep Back 150M". White plate with red reflective lettering. Locate on rear ladder access doors.	$132
3340-0494	Rubrail for the body.	$742

3340-0499	Storage area to officer side of center hosebed divider. Area to include (from driver to officer side): (1) 10" H x 10" W. This includes (1) divider with square ends and hosebed style top. Remaining are to be for horizontally stored backboards (2). Area to be 6" H x remaining hosbed width with a hosebed style top (full length of hosebed).Each storage area to have a drop down diamond plate door with push button latching and each wired to door ajar indicator in cab.	$631
3340-0500	[#LOC] compartment walls are to be non-louvered.	$228
3340-0509	The outboard panels of the roof top compartments to be smooth plate overlays. These areas are to be seamless and painted job color.	$2,599
3340-0511	Bolt-in partition walls. Locate in lower rear compartment transverse area. Partitions to seperate the L3 compartment from the rear compartment.	$117
3340-0512	I-Zone brackets mounted on driver and officer rear body compartment face up high. Includes 14" removable poles with keeper pins.	$225
3340-0513	Special hosebed configuration from driver to officer side. 500' of 2.5" DJ hose, (1) short divider, backboard storage to hold (2) backboards with access from a vertically hinged diamond plate door with a push-button latch, (1) short divider, 750' of 3" DJ hose to be stored above strut storage box with (3) 5" aluminum tubes length of the hosebed includes drop down door (wired to door ajar) with push-button latch and hosebed style top, hosebed cover center divider, 1200' of 5" LDH hose, (1) long divider with horizontally hinged shelf to seperate upper hose packs from lower 300' of 1.75" DJ hose.	$3,043
3340-0514	Compartment R1 to have no louvers. Requires roll-up door application.	$106
3340-0516	Storage Pan Hot Shot II Hydraulic Reservoir. Includes a hinged lid with gas shock hold open.	$731
3340-0519	Removable number plate with mounting brackets. Locate [#LOC]. Plate to be painted job color. Plate to be 12"W x 12"H. Lettering and/or graphics not included.	$280
3340-0520	Smooth plate single axle wheel well painted job color. Includes bolt-on composite wheel well liners and bolt-on polished alum fenderettes.	$1,497
3340-0521	All body and pump module compartments (if applicable) and/or storage areas to have no louvers or vents.	$263
3340-0526	Hose bed storage pan to extend forward over eMAX transverse storage area(s).	$310
3340-0527	2x2 angle to be located full width of opening of compartment L2.	$171
3340-0529	Smooth plate single axle wheel well. Includes bolt-on composite wheel well liners and bolt-on polished alum fenderettes. Panel to be painted job color.	$1,625
3340-0530	Removable number plate with mounting brackets. Locate [#LOC]. Plate to be painted job color. Plate to be 12"W x 8"H. Lettering and/or graphics not included.	$255
3340-0543	Transverse sleeve thru backwall of compartments L1 and R1. Transverse area to be approx. 32" wide x 18" high x 47" deep.	$727
3340-0555	Roof top compartments to have raised push button latches in place of turn latches.	$322
3340-0560	Rolled hose rack for (4) hose rolls. Includes (3) adjustable dividers to be 18" high x 24" deep each with adjustable tracking on floor. Locate in floor of L1 compartment.	$574
3340-0562	Universal air pack bottle bracket installed on backwall of compartment [#LOC].	$149
3340-0576	Mateflex brand [#COL] floor matting covering all applicable compartment floors, shelves, and roll-out trays.	$1,029
3340-0577	Bolt-in partition wall. Located forward of electric cord reels in driver and officer side roof top compartments.	$215
3340-0578	Bolt-on trim panels to be installed over the side walls extrusions of the driver and officer side roof top compartments.	$811
3340-0579	Provide (2) two inch conduits with pull wires in them for dealer/customer installed equipment. Locate (1) from driver side forward roof top compartment to the hydraulic ports on the front bumper and (1) from driver side forward roof top compartment to the hydraulic ports in the B1 compartment.	$428
3340-0585	Ladder storage box. Located in the driver side of the hosebed. Includes vertically hinged door (wired to door ajar) w/push-button latch and composite flooring. Box to hold: (1) Alco-lite CJL-12 ladder. Deletion of aluminum hose bed cover center divider notch may be required as applicable.	$614
3340-0586	Storage pan over eMAX transverse storage area(s).	$437
3340-0587	Slip-on stainless steel dump elbow and 36" straight extension chute. Includes body mounted removable support arm and mounting brackets at rear of body for elbow and straight chute.	$1,650
3340-0588	Slip-on painted steel dump elbow and 36" straight extension chute. Includes body mounted removable support arm and mounting brackets at rear of body for elbow and straight chute.	$1,274
3340-0589	Body main frame and 46" wide hose bed for a 83" high rescue pumper body. Intended for use with overhead ladder rack and stay under 10' OAH.	$2,310
3340-0591	Hose bed bulkhead divider, stainless.	$542
3340-0597	Handrail to be mounted between stanchion posts. Stanchion post be 6" high and set back 11" from back of body.	$482
3340-0599	Hosebed storage box. Located in the driver side of the hosebed. To hold (2) backboards, (2) 10' pike poles and (1) 10' attic ladder with access from a vertically hinged diamond plate door (wired to door ajar) with a push-button latch.	$1,461
3340-0600	Bolt-in partition walls. Locate in lower rear compartment transverse area. Partitions to seperate the R2 compartment from the rear compartment.	$117
3340-0602	Diamond plate side dump panels. Includes drop-down diamond plate doors with counter balanced actuation.	$649
3340-0603	Removable number plate with mounting brackets. Locate [#LOC]. Plate to be painted lower job color (if cab is painted two tone). Plate to be 8"W x 14"H. Lettering and/or graphics not included.	$280
3340-0605	Removable number plate with mounting brackets. Locate [#LOC]. Plate to be painted upper job color (if cab is painted two tone). Plate to be 14"W x 8"H. Lettering and/or graphics not included.	$280

3340-0614	[#COL] edge trim for floor mounted Turtle Tile matting. Locate on door opening side only. Requires seperate floor matting option.	$371
3340-0615	Pan mounted diamond plate 3 sided generator shield. Includes partition in storage pan for driver side wall.	$919
3340-0616	Tool air system. Includes 6000 PSI DOT cyl, bottle rack, fill panel. Rack located driver side roof top compartment. Fill panel adjacent to breaker box In L1.	$4,658
3340-0617	The following items to be sanded smooth plate painted with black Scorpion coating place of standard diamond plate: Compartment tops, roof top compartment lids, hosebed storage pan, transverse module storage pan, aluminum hosebed covers, tailboard, rear intermediate steps, transverse module running boards.	$3,062
3340-0623	There shall be a compartment below side dumps, it will include a vertically hinged access door (one each side) below the side dumps with push button latch. Doors to match dump panel material. Compartment dims to be approximately 15" high x 24" wide x 26" deep.	$274
3340-0626	Body mainframe and hosebed side assemblies for a 94" high body.	$3,465
3340-0630	Upper hosebed above the upper section of the booster tank. Includes forward hosebed cover plate work and modifying hosebed storage pan to be 39" wide above upper section of booster tank.	$1,026
3340-0631	Removable number plate with mounting brackets. Locate [#LOC]. Plate to be painted body job color. Plate to be 8"W x 14"H. Lettering and/or graphics not included.	$280
3340-0632	Body main frame and 59" wide hose bed for a 90" high rescue pumper body.	$2,310
3340-0633	Removable Poly hose bed storage tray (EA). The floor of the tray(s) to be slotted to prevent the accumulation of water and allow for ventilation of wet hose.	$532
3340-0635	Mud flaps, in front of rear wheels, black with no logo. Install additional row of fasteners close to bottom of wheel well.	$212
3340-0636	Fill Tower support bracket to be held 1/4" back from fill tower and attached to front hosebed wall.	$116
3340-0637	Cover plates around rear frame mounted tow eyes in B1 compartment.	$116
3340-0638	Bolt-in partition wall. Located rearward of air cord reel in officer's side roof top compartment.	$215
3340-0639	Front of hose bed stainless steel partial storage divider on officer side for selected accessory such as a generator. Located in forward area of hose bed to separate the storage area from the main hose storage area. Applicable main hose bed dividers will be located rearward of the partial divider.	$776
3340-0641	Removable number plate with mounting brackets. Locate [#LOC]. Plate to be painted upper cab job color. Plate to be 5.5"H x 11"W. Lettering and/or graphics not included.	$280
3340-0643	Stainless steel trim for lower edge of rear mudflap (PR). The trim shall be 2" in height and go full width of the mudflap. The material shall be "polished" stainless steel and it will be mounted to the lower edge of the rear (back side) of the mudflaps.	$309
3340-0644	Flooring plate additional in L2 and R2 compartments. 3/16" aluminum smooth plate to be bolted in place 1/2" above standard diamond plate compartment floors.	$154
3340-0645	(2) driver side roof top compartments with extra width to inboard side. Includes hinged raised compartment lids ("embossed" treadplate) with turn latches, grab handle(s) and gas shock hold open and drain line(s) ran to below body. Each lid to have (1) bracket mounted LED light and to be wired to door ajar indicator in cab.	$5,039
3340-0646	(2) officer side roof top compartments with extra width to inboard side. Includes hinged raised compartment lids ("embossed" treadplate) with turn latches, grab handle(s) and gas shock hold open and drain line(s) ran to below body. Each lid to have (1) bracket mounted LED light and to be wired to door ajar indicator in cab.	$5,039
3340-0647	Roof top compartment doors shall have larger latches installed (Southco model C5-11-15 latch, C5-82 gasket) in place of standard.	$222
3340-0650	Fill tower partition. "U" shaped partition to be located around water fill tower and extend rearward to bolt to rear surface of storage pan. This 1/8" diamond plate "hat" section shall provide fill tower protection within the hose bed.	$316
3340-0651	Piping cover where visible for discharge piping above pump enclosure to front of hose bed (each). Cover to be stainless steel to blend with surrounding area.	$470
3340-0652	Stainless steel trim for lower edge of front mudflap (PR). The trim shall be 2" in height and go full width of the mudflap. The material shall be "polished" stainless steel and it will be mounted to the lower edge of the rear (back side) of the mudflaps.	$309
3340-0653	Diamond plate tandem axle wheel well. Includes bolt-on composite wheel well liners and bolt-on polished alum fenderettes.	$1,998
3340-0657	Trim between the body front and the cab. One (1) each side to close out the majority of the gap between the body and cab, The trim pieces shall be smooth aluminum plate painted job color and will be bolted in place to the body.	$414
3340-0662	Recessed fuel fill with flat latching stainless steel door. Door style to match SCBA doors.	$269
3340-0664	Backboard storage box. Located in the officer side of the hosebed. To hold (1) backboard with access from a vertically hinged diamond plate door with a lift and turn latch. The box to only run the length of the backboards.	$497
3340-0665	Hosebed storage pan partition. Partition to be adjustable front to back in hosebed storage pan.	$316
3340-0666	Mounting for directional light bar. Located on rear area of body below upper or intermediate step.	$119
3340-0673	Storage box with (2) drop down doors. Diamond plate box to be approx. 136" long x 12" high x 12" deep mounted on officer side compartment top between hosebed side tubes. Includes hinged drop down doors with locking D-ring latches (wire to door ajar).	$927
3340-0675	The outboard panels of the rear body to be smooth plate overlays. These areas are to be seamless and painted job color.	$2,573
3340-0683	Hosebed storage pan. Locate in forward area of hosebed. Pan depth shall be approximately 18".	$1,032

3340-0690	Slide-out Speedy Dry Hopper. Tray mounted to floor mounted tray that is located in R3, forward. Capacity of hopper is 100 lbs. (Tray not included which must be selected separately.)	$1,551
3340-0695	Soda ash hopper. Locate [#LOC]. Includes discharge chute in compartment directly below roof top compartment with close off valve and extension hose for ground level dispensing. The hopper shall be constructed of stainless steel, holding capacity shall be 200 lbs.	$2,090
3340-0697	Power vent system located in [#LOC]. Wired through receptacle in compartment.	$191
3340-0699	Bolt-on cover plate over upper section of water tank to be embossed diamond plate.	$557
3340-0702	Hosebed storage box. Located in the driver side of the hosebed. To be 76" long X 25" wide X hosebed depth. Box to have diamond plate top with approx. 4" upper. 4" middle and 8" lower storage space. Includes a vertically hinged diamond plate door (wired to door ajar) with a push-button latch.Hinge door to outside.	$1,461
3340-0703	Diamond plate box for directional lightbar and (2) Whelen M6 Linear Super LED scene lights. Box to be mounted on 3" x 3" aluminum angle at rear of hosebed decking. Lights to be surface mounted to box.	$1,284
3340-0707	Upper right side of body to be notched to allow hydraulic overhead ladder rack to be lowered for reduced travel height. Compartment opening height to remain std.	$1,522
3340-0708	The outboard panels of the driver side roof top compartments to be smooth plate overlays. These areas are to be seamless and painted job color.	$1,301
3340-0709	Vertical handrails as mounted the rear body shall extend full height from the bottom of the body to the top of the body IPOS (as practicality permits).	$130
3340-0710	Transverse storage modification affecting L3, B1 and R3 compartments to accommodate a transverse storage area running from L3 to R3 (lower area only). The transverse tunnel area shall be approximately the full depth of the B1 compartment, the compartment opening height shall start approximately 2" above the floor to maximum height available (height may be reduced as required depending upon the rear body storage tunnel foot print). The B1 compartment side walls will be opened (removed) as part of the transverse modifications necessary.	$1,088
3340-0712	Recessed area in storage pan for deck gun to be as low as practical.	$607
3340-0713	Diamond plate deflector shield for Light Tower. Deflector to be mounted on driver side compartment top at front of body. See photos on file.	$395
3340-0714	Bolt-in floor [#LOC]. Floor is in addition to the existing DP floor. Floor to have 2" raised forward area (tapered towards rear for securing cribbing) and run full length front to rear.	$218
3340-0716	Bolt-in SS floor taper [#LOC]. Floor taper is in addition to the existing stainless steel floor. Floor to have 1.5" raised outer area (tapered towards back wall for securing cribbing) and run full length side to side.	$218
3340-0720	Slip-on painted steel dump elbow and 36" straight extension chute. Includes body mounted removable support arm and mounting brackets in compartment [#LOC] for elbow and straight chute.	$1,274
3340-0723	All compartment floors to have Zolatone gray finish. Includes changing floors from diamond plate to smooth plate.	$1,801
3340-0725	Rear vertically hinged door for the officer's side roof top compartment. The door includes thumb latch(s) and wiring for the door ajar switch. The material shall be 1/8" aluminum smooth plate and the hinge shall be placed outboard.	$119
3340-0726	Nylon black cargo net for interior compartment opening of compartment [#LOC]. Cargo net to have custom designed one-piece bar assembly and one step Velcro attachment process with footman loops shall be used opposite the bar end.	$297
3340-0727	Body main frame and hose bed for a 85" high stainless steel eMAX rescue pumper body.	$1,463
3340-0728	Body main frame and hose bed for a 90" high stainless steel eMAX rescue pumper body.	$2,816
3340-0729	Body main frame and hose bed for a 95" high stainless steel eMAX rescue pumper body.	$4,227
3340-0730	Smooth plate corner guards for the driver and officer front and rear compartment faces. Guards to wrap around the corner and be full height of side assembly or to a max of 96". Corner guards to be painted black durabak.	$886
3340-0731	Access panels thru B1 interior officer side and into rear of R4. Service access rear of fill station controls. Access panel to be sized as large as possible to accommodate sevice operations.	$454
3340-0736	Body main frame and hose bed side assemblies for an 83" high body with low hose bed and "L" shaped water tank. No upper rear crossover hand rail.	$1,375
3340-0737	Body mainframe and hosebed side assemblies for a 100" high body.	$4,617
3340-0738	A landing platform (10" in depth, the width shall be sized and positioned as required with overall rear end configuration) with embossed diamond plate surface will be centrally located at the upper rear of the apparatus to assist with hose bed cover operations.	$357
3340-0739	Turtle Tile brand floor matting covering driver and officer roof top compartment floors full length and width. Color: [#COL].	$601
3340-0740	Divider shroud for cab tilt pump, bolt in R1.	$180
3340-0742	Hose bed walkway offset to driver side. Non-slip diamond plate walkway to run full length of hose bed.	$1,360
3340-0743	Backboard Storage sleeve. Located in the officer side hard suction storage compartment. Sleeve to hold (1) backboard, 2"H x 16" W x 73" L. Includes stop bracket approximately 74" back from opening.	$408
3340-0744	Full width hosebed above the booster tank from the driver side extra wide roof top compartments to the officer side with raised side assemblys.	$1,769
3340-0745	Divider Support to run full available width of hosebed (side to side not including hosebed walkway) at the front of the hosebed and at the rear of the hosebed at top of the divider(s) even with the top of the hosebed. Position inboard divider to be utilized as a walkway sidewall and add an aluminum angle bracket along the length of the divider on the hosebed side to facilitate mounting of twist-lock fasteners for the hosebed cover.	$438

3340-0746	CTECH Brand 4 drawer compartment toolbox unit in [#LOC]. Includes Cal Gray drawer face finish with two (2) 8" drawers below and two (2) 3" drawers above to mount in an available compartment opening. Toolbox dimensions to fit in an opening 39.5" W X 23.0" H X 24". Requires a fixed shelf mounted above toolbox enclose top drawer and to create opening height added separately.	$1,940
3340-0747	Compartment heater as high as possible on forward wall. Includes switch on driver overhead. Location: [#LOC].	$1,183
3340-0749	Directional light bar box. Located on rear area of body between upper rear hose bed Unistruts. Box to be .125" diamond plate and mounted to structural stainless steel framework including Unistrut channel for hose bed divider attachment. SS product only.	$2,245
3340-0750	Four (4) divider supports to attach to each top rear edge of each hose bed divider to provide additional support. Ship loose for dealership installation. SS product only.	$240
3340-0752	Embossed diamond plate in place of ALL standard and optioned diamond plate on body and modules.	$1,389
3340-0754	Hosebed storage pan constructed of 3/16" (.187") aluminum smooth plate with black Scorpion coating (rough finish) IPOS diamond plate. Locate in forward area of hosebed.	$929
3340-0757	Floor overlay [#LOC]. The overlay shall be constructed of 1/8" treadplate and shall be raised at the interior wall 1" providing a sloped floor (low point at the door opening).	$369
3340-0758	Speedy dry hopper. Locate [#LOC]. Includes discharge chute in compartment directly below roof top compartment with close off valve and extension hose for ground level dispensing. Capacity of speedy dry hopper is 180 lbs for a shorter upper body (less than 19").	$1,551
3340-0767	Dividers, bolt in, Qty (2) for transverse compartment. Location between L3/R3. One (1) divider to be located 26 inches deep from L3 and one 28 inches deep R3 door opening so as to generate a compartment located over chassis centerline.	$939
3340-0771	Special hose bed divider height and reinforcement. The height of the hose bed divider from driver to officer side: 1st divider 36"T, 2nd divider 30"T. Each divider shall have a round reinforcement welded in place on the forward and rear vertical edges and the top horizontal edges to stiffen the dividers as mounted.	$244
3340-0772	Rear wheel well trim shall be added to both sides of the unit. Diamond plate 1/16" thick shall be added to the 4" extrusion that surrounds the wheel well. The extrusion forward, rear and on top of the wheel well shall have a diamond plate overlay added.	$199
3340-0775	Stokes basket storage box for a Ferno Washington model 71. The storage box shall be made from diamond plate material approx 9" wide x 26" tall x 90" deep. It shall include a rear mounted door with a vertical hinge and a thumb latch. Location officer side hosebed.	$1,653
3340-0777	Slip-on stainless steel dump elbow and 36" straight extension chute. Includes body mounted removable support arm and mounting brackets in compartment [#LOC] for elbow and straight chute.	$1,650
3340-0778	Wheel well liner extensions for inboard side of rear wheel well liners (PR).	$326
3340-0779	All folding steps shall be Signature Fire Shopp brand. The folding steps shall be dual LED (top and bottom) model 101953-2 IPOS.	$151
3340-0785	There shall be no visible diamond plate on the body exterior.	$302
3340-0788	Storage Pan Hot Shot II Hydraulic Reservoir. Includes a lid hinged forward with gas shock hold open.	$731
3340-0789	Hosebed storage pan. Locate in forward area of hosebed. Storage pan to be 109" interior length for Night Scan NSP7.5 light tower.	$1,463
3340-0790	Swing arm bracket with smooth plate box for TAL65 lightbar mounted on square extrusion. Swing arm to be mounted at rear of hosebed, with pivot tower and (2) locking towers to be provided.	$700
3340-0791	Body mainframe and hosebed side assemblies for a 87" high body.	$2,310
3340-0795	Stainless steel rear fender panels.Includes bolt-on stainless steel inner wheel well liners (not painted) and polished stainless steel outer fenderettes.	$1,472
3340-0796	Body main frame and hose bed side assemblies for a 94" high rescue pumper body.	$3,373
3340-0797	Body main frame and hose bed side assemblies for a 88" high pumper body.	$3,956
3340-0798	Extruded aluminum rubrails for the sides of the body below the lower side compartments and full width of the rear tailboard.	$650
3340-0800	Notched hosebed divider(s). Notch to be in center approximately 32" up from floor and angle up 45 degrees at each end. See photo on file.	$410
3340-0801	Special hose bed divider reinforcement. Each divider shall have a round reinforcement welded in place on the forward and rear vertical edges and the top horizontal edges to stiffen the dividers as mounted.	$324
3340-0802	The vehicle shall be supplied with a deck gun cradle for additional support of the deck gun's tip/nozzle assembly. The cradle shall be made of stainless steel materials with a cushioned rest pad. Cradle shall remain unpainted.	$252
3340-0806	Cab, Body and Pump Module safety and warning Tags in French to be in addition to standard English E-One supplied Tags.	$1,498
3340-0807	Speedy Dry Hopper. Locate in roof compartment above R2. Includes discharge thru bottom of compartment R3 along forward compartment wall with valve for ground level dispensing. Capacity of speedy hopper is 100 lbs.	$1,336
3340-0809	Body main frame and hose bed for a 95" high stainless steel eMAX rescue pumper body. Hose bed to be 56" wide.	$4,227
3340-0811	Two (2) stainless steel dividers with ADT doors to be installed in the upper forward body dunnage area with clearance for deck gun. Hinged outboard side.	$1,069

3340-0812	Hose tray - Polypropylene - removable. Tray includes pull-out grab handle (poly dowel) down low on each end to facilitate lifting. The tray shall be sized to fit the area above the ground ladders. The tray(s) shall be made from Polypropylene, the floor of the tray shall be slotted to prevent the accumulation of water and allow for ventilation of wet hose.	$823
3340-0813	Driver side hosebed storage box. Storage box to hold (3) New York style pike poles and (3) backboards (2"x16"x71"). Pike poles to be stored down low. Backboards to be stored up high with dividers seperating storage for each board. Includes vertically hinge hinged door (wired to door ajar) with D-ring latch.	$1,308
3340-0820	Removable aluminum hose bed storage tray (EA), installed at the top rear of bed 1. Tray shall include manual release assembly to lock tray in place. The floor of the tray(s) to be slotted to prevent the accumulation of water and allow for ventilation of wet hose.	$684
3340-0821	Locate (2) hosebed storage pans (1) each side of ladder storage box in forward area of hosebed. Pans to hold hydraulic cooler and hydraulic resevoir.	$833
3340-0833	Above the right side ladder tunnel shall be a weather resistant top hatch compartment, forward of the shovel and broom storage module. Compartment shall be approximately 12.75" wide x 74" long x 13.5" deep. Includes 3/16" polished aluminum treadplate door, hinged outboard, latching towards the hose bed. One (1) clear lens light shall be installed in the compartment and the lid shall be wired to the door ajar indicator in the cab.	$485
3340-0836	Compartment pan drop down door inside to have Zolatone gray finish (door only). Location L2 and R2 drop down doors.	$226
3340-0837	Cover cast products AD0039-1 mounted over newton dump control switches on rear of body.	$200
3340-0838	Hosebed deflector divider. Locate to officer side rear of hosebed forward of deck gun. Deflector smooth plate to cover the forward and side of the deck gun piping. Rearward side of deflector at back of hose bed to be diamond plate.	$325
3340-0840	Divider in left hand full body length storage area running side to side with adjustable track (Provides two storage areas, one ahead and one behind divider). To be located in LH hosebed open storage area on driver side top of body. Locate adjustable divider tracks on sides of storage area 55" forward of the rear of the storage area with tracks to allow for adjustment a minimum of 15" forward and rearward from 55" location. For storage of a bound Hi-Rise hose pack to be stored rearward of the divider and the forward area to be open misc. equipment storage.	$232
3340-0841	Sign plate smooth 30" x 30" mounted centered on body roof. Color: [#COL].	$231
3340-0847	Rubrail for the body (sides only, serrated surface facing down).	$552
3340-0849	Rub rail assemblies constructed of 3" x 2" Black U.H.M.W. plastic. (1) bolted to the lower exterior edge of the apparatus body and pump module.	$875
3340-0855	There will be an access panel located in the hosebed for access to the water/foam tank level senders.	$106
3340-0861	Reinforce flooring of compartment LTC and RTC for storage of heavy equipment.	$491
3340-0862	Stainless steel trim on bottom edge of compartment opening of [#LOC]. Includes full height of exterior extrusion.	$151
3340-0863	Headboard extrusions and smooth plate at top front of the body to be painted job color finished.	$189
3340-0864	Diamond plate single axle wheel well. Includes bolt-on composite wheel well liners and sanded aluminum trim fenderettes.	$895
3340-0868	Fire Shopp recessed fuel fills for dual fuel fill applications. Includes brushed finish S/S doors with positive latch.	$572
3340-0870	Stainless steel trim on bottom edge and covering entire surface of extrusion below compartment opening of [#LOC].	$182
3340-0874	Reinforced hinged .188" embossed diamond plate lid for dunnage pan. Includes two (2) D-Ring latches, stainless steel hinge along forward edge and gas shock hold open. Lid to be reinforced with welded on structure on underside to allow for lid to be a walking surface.	$666
3340-0880	Brushed stainless steel scuff plates for all body handrails.	$463
3340-0882	Body main frame and hose bed for a 97" high stainless steel eMAX rescue pumper body.	$4,316
3340-0883	Rubber fenderette in place of weld-on.	$280
3340-0888	FRP exterior panel replacement set for stainless steel tanker body. Panels to include all original factory cutouts and notches. Panels to be shipped loose with vehicle upon delivery.	$1,005
3340-0889	Body mainframe and hosebed side assemblies for a 96" high body.	$3,696
3340-0892	Rub rail assemblies constructed of 3" x 2" Black U.H.M.W. plastic. (1) bolted to the lower exterior edge of the apparatus body only.	$593
3340-0894	Smooth plate single axle wheel well painted job color. Includes bolt-on composite wheel well liners and bolt-on polished alum fenderettes. Wheel well plates to be flush mounted.	$3,008
3340-0895	Smooth plate tandem axle wheel well painted job color. Includes bolt-on composite wheel well liners and bolt-on polished alum fenderettes. Wheel well plates to be flush mounted.	$4,897
3340-0896	Body wheelwell driver side compartments (2) approx 24" W x 6" H x 26" deep. A gasketed drop down door shall be installed on each compartment. Door material to match wheelwell finish.	$675
3340-0898	Rolled hose rack for (2) hose rolls, (1) 5" LDH 9" wide, (1) for the balance of tray. Includes (3) dividers attached to roll out tray in compartment L1.	$357
3340-0901	(3) Removable number plates with mounting brackets. Locate (1) each side of cab rearward of driver and officer doors, (1) driver side rear compartment face above taillights. Plates to be 5.25" tall X 5" wide and painted job color. Lettering and/or graphics not included.	$804
3340-0902	Body wheelwell compartments (4) approx 24" W x 6" H x maximum depth permissible without interference with hydraulic line(s) reservoir(s) etc. A gasketed drop down door shall be installed on each compartment. Door material to match wheelwell finish.	$1,349
3340-0904	Logo, rear body to be mounted at final inspection.	$240
3340-0907	Body mainframe and hosebed side assemblies for a 88" high body.	$2,310

3340-0908	Slip-on stainless steel dump elbow and 36" straight extension chute. Includes body mounted removable support arm, mounting brackets at rear of body for elbow and brackets for straight chute in R2	$1,650
3340-0909	Divider Long Fixed. To run full length of hose bed (front to rear) positioned fixed as close to center of hosebed ROM roll up door drum center as hose loading permits..	$574
3340-0910	Label wheel well doors with 1x3 labels to read applicable contents per location. Mechanically attached lable to each location required.	$20
3340-0911	A polypropylene storage box for foan cannisters shall be supplied. The storage shall be for fourteen (14) cannister 7 wide x 2 high. Each compartment shall be 6" wide x 11" high. There shall be NO back wall on the box.	$1,464
3340-0915	Body main frame and 46" wide hose bed for a 95" high rescue pumper body.	$3,136
3340-0916	Warning light wiring shield (PR) fabricated from .090 smooth plate aluminum finished to match compartment interiors, shall be provided in upper hard suction storage compartment at rear.	$216
3340-0918	Wheel Chocks Alum HGS Heavy Includes Brackets. Locate below compartment ahead of Drivers side rear wheels.	$519
3340-0919	Diamond plate Storage Box. Located on the driver side compartment top for long tool storage. Includes hinged raised compartment lid with turn latches and grab handle(wired to door ajar indicator). Box to be as long as possible.	$992
3340-0920	Bolt-in partition wall. Locate in lower rear compartment transverse area. Partition to separate R3 compartment from B1 compartment.	$151
3340-0921	Special hose bed divider height and reinforcement for single (or first) hose bed divider. The height of the hose bed divider shall be lowered 10" over standard. The divider shall have a round reinforcement welded in place on the rear vertical and the top horizontal edges to stiffen the divider as mounted. A Divider Support to run full width of hosebed (side to side) at the front of the hosebed and be attached to the hosebed divider to provide additional support.	$455
3340-0923	Speedy Dry Hopper. Locate in roof compartment above R3. Includes discharge thru bottom of compartment R4 along forward compartment wall with valve for ground level dispensing. Capacity of speedy hopper is 100 lbs.	$1,336
3340-0924	Aluminum angle 2"x2" bolt on light guard to protect ROM light fixture and roll-up door track from damage for L4 rearward light only. (1) 18" piece at top and (1) 18" piece at the bottom bolted to the rear wall.	$111
3340-0925	Speedy dry hopper. Locate [#LOC]. Includes discharge chute in compartment directly below roof top compartment with close off valve and extension hose for ground level dispensing. Capacity of speedy dry hopper is 200 lbs.	$1,551
3340-0928	Body main frame and hose bed side assemblies for a 93" high pumper body with special location side sheet on right side to lower overhead ladder rack. No upper rear crossover hand rail with this option.	$3,446
3340-0929	Smooth plate tandem axle wheel well painted job color. Includes bolt-on composite wheel well liners and fenderettes painted Durabak black.	$3,780
3340-0930	Hosebed storage area (no pan) in forward area of hosebed with embossed diamond plate cover hinged forward with two grab handles and gas shock hold opens. The cover to open past 90 degree for ease of equipment loading and removal in the storage area.	$731
3340-0932	Raised transverse opening 2" above compartment floors to accommodate transverse pass through from B1 to L3/R3 or rearward side compartments as applicable. Pass through to be in lower 30" high section of compartment behind frame cut and water tank under ladder or equipment tunnel(s). Pass through openings to have aluminum picture frame style pass through trim from each compartment over lapping to enclose compartment wall breaks creating pass through between each compartment without a sleeve.	$1,941
3340-0933	Body mainframe and hosebed side assemblies for a 88" high body.	$2,310
3340-0938	Provide access with covers on forward wall of compartment R3 to access to upper KLAMP-IT hardware for DOT storage bottles located in R2.	$180
3340-0943	Transverse compartment modification affecting rear side and rear compartments on rescue pumper body's. The transverse storage area running from side to side (lower area only). The compartments above the transverse each side to be full depth.	$1,088
3340-0947	Rolled hose rack for (3) hose rolls, (1) 50' of 1.75", (1) 25' of 3" and (1) 25' of 5. Includes adjustable (4) dividers attached to roll out tray(s) in compartment(s) L1, R1.	$569
3340-0948	The hose bed is to have the capacity for the following hose (unless otherwise specified on the approval drawing). Hose load shall be listed from driver to officer. Bed 1, 1000' of 5" hose, Bed 2, 200' of 2-1/2" hose, Bed 3, 300' of 2" hose, Bed 4, 200' of 3" hose, Bed 5, (2) areas each holding 200' of 3" hose seperated by a hinged false floor.	$588
3340-0949	Stokes storage with stops located in the drivers side upper header. Includes a lift-up rear access door (wired to door ajar) w/bent D-ring latch.	$1,645
3340-0953	Rub rail assembly constructed of 3" x 2" Black U.H.M.W. plastic. Bolted to the lower exterior perimeter edge of the apparatus body. Rub rail shall be mitered 45 degrees at leading and trailing end and notched for marker and warning lights clearance (where applicable).	$1,294
3340-0954	Stainless steel rear fender panels painted job color. (Recommended for FRP paint process compatibility!) Includes bolt-on stainless steel inner wheel well liners (not painted) and rubber outer fenderettes.	$1,364
3340-0955	Backboard storage sleeve. Locate in ladder tunnel. Rack to be approx 3"W x 18"H x 72"L.	$408
3340-0956	Compartment R1 to be notched for vertical exhaust in back forward corner of the compartment.	$263
3340-0957	Compartment R4 to be notched for deck gun piping in back rearward corner of the compartment.	$263
3340-0958	Backboard storage sleeve for (2) boards individually stored one on top of the other. Each area to be 3"W x 17"H x 72"L. Includes (1) retaining strap on the driver side. Location: Vertically mounted in L1 and into R1 (no access this side) inboard of the vertical exhaust.	$671

3340-0960	Body main frame and hose bed side assemblies for a 90" high pumper body.	$4,049
3340-0961	Divider long fixed at the edge of the step-down in hosebed (officer side). Divider to run full length of hose bed (front to rear).	$487
3340-0962	Body main frame and hose bed side assemblies for a 97 in. high body.	$3,927
3340-0963	Hosebed storage pan smooth plate painted black Durabak. Locate in forward area of hosebed.	$915
3340-0964	Storage pan over eMAX transverse storage area(s) to be smooth plate painted black Durabak.	$547
3340-0969	Divider Reinforcement. To run full length of hose bed divider on top surface (front to rear). 3/4" extruded aluminum tubing welded to divider. Price per each divider.	$315
3340-0971	Stainless steel tag on wheel well area above each tire location. Tag to be engraved, silver with black lettering, and specify pressure, torque and size of each tire.	$207
3340-0975	Smooth plate painted tandem axle wheel well. Includes bolt-on composite wheel well liners and bolt-on polished alum fenderettes.	$3,030
3340-0976	Horizontal air bag module for four (4) customer furnished air bags. Bags will be Paratech Maxiforce brand and each bag will store with two (2) identical pieces of 3/4" plywood. Nylon buckle strap assembly shall be provided across the openings. Locate on floor of compartment L2. See specifications for details.	$1,183
3340-0978	Body mainframe and hosebed side assemblies for a 104" high body.	$5,538
3340-0979	Smooth plate single axle wheel well painted black Durabak. Includes bolt-on composite wheel well liners and bolt-on polished alum fenderettes.	$1,497
3340-0980	Sign plate holder made from smooth aluminum material, sized to be 12"w x 6"h, painted job color. Locate (1) at rear of truck, one (1) mounted on front bumper and (1) each side cab below canopy windows.	$485
3340-0981	Divider Support to run full width of hosebed (side to side) at the front of the hosebed and towards the rear of the hosebed at top of the divider(s). Attach to each hosebed divider to provide additional support. The rear divider support to be located as far rearward as available space on upper rear hose bed allows for support mounting.	$370
3340-0983	All body and pump module compartments (if applicable) and/or storage areas (EXCEPT R1 compartment) to have no louvers or vents. Louvers or vents for compartment R1 are to located up high only.	$263
3350-0000	Hydraulic hose reel for use with Hurst brand tools. Includes 100' 1/4" hose (up to 5,000 PSI) and rollers (captive type). Location: [#LOC]. Hose Color: [#COL].	$2,398
3350-0001	Air Reel w/electric rewind. 12V with 100' .25" hose plumbed to the truck air system (unless otherwise specified). Location: [#LOC].	$2,636
3350-0002	Low Pressure Utility Air Hose Reel assembly with 175' low pressure air hose and mini panel. Locate in [#LOC].	$2,398
3350-0004	Low Pressure Utility Air Hose Reel assembly with 250' low pressure air hose and mini panel. Locate in [#LOC].	$2,530
3350-0009	Hydraulic hose reel for use with TNT brand tools. Includes 100' 1/4" hose (up to 10,500 PSI) and rollers (captive type). Location: [#LOC]. Hose Color [#COL].	$4,818
3350-0010	Hydraulic hose reel for use with Phoenix brand tools. Includes 100' 1/4" hose (up to 5,000 PSI) and rollers (captive type). Location: [#LOC]. Hose Color [#COL].	$2,398
3350-0011	Hydraulic hose reel for use with Code 3 brand tools. Includes 100' 1/4" hose (up to 5,000 PSI) and rollers (captive type). Location: [#LOC]. Hose Color [#COL].	$2,398
3350-0012	Hydraulic hose reel for use with Amkus brand tools. Includes 100' 1/4" hose (up to 10,500 PSI) and rollers (captive type). Location: [#LOC]. Hose Color: [#COL].	$4,818
3350-0013	Hydraulic hose reel for use with Hurst Centaur brand tools. Includes 100' 1/4" hose (up to 10,000 PSI) and rollers (captive type). Location: [#LOC]. Hose Color [#COL].	$4,818
3350-0014	Hydraulic hose reel for use with Genesis brand tools. Includes 100' 1/4" hose (up to 10,000 PSI) and rollers (captive type). Location: [#LOC]. Hose Color [#COL].	$4,818
3350-0015	Hydraulic hose reel for use with Holmatro brand tools. Includes 100' 1/4" hose (up to 10,000 PSI) and rollers (captive type). Location: [#LOC]. Hose Color [#COL].	$4,818
3350-0016	12' Lead/Supply Line for high pressure hydraulic reel. To be used with 10,000 PSI hyd reels. Locate on reel in [#LOC].	$820
3350-0017	30' Lead/Supply Line for high pressure hydraulic reel. To be used with 10,500 PSI hyd reels. Locate [#LOC].	$1,219
3350-0018	12' Lead/Supply Line for low pressure hydraulic reel. To be used with 5,000 PSI hyd reels. Locate [#LOC].	$657
3350-0019	30' Lead/Supply Line for low pressure hydraulic reel. To be used with 5,000 PSI hyd reels. Locate [#LOC].	$1,032
3350-0024	Dual hydraulic reel rollers mounted thru bolt-on bracket. Location(s): [#LOC].	$482
3350-0025	Hydraulic hose reel for use with TNT brand tools. Includes 100' 1/4" synthetic rubber hose (up to 10,500 PSI) and rollers (captive type). Location: [#LOC]. Hose Color [#COL].	$4,818
3350-0026	Hydraulic hose reel for use with Amkus brand tools. Includes 100' 1/4" rubber hose (up to 10,500 PSI) and rollers (captive type). Location: [#LOC]. Hose Color: [#COL].	$4,818
3350-0028	Raceway for 12' Lead/Supply Line between the B1 and L3 compartments.	$335
3350-0029	Route hydraulic lead line(s) to [#LOC].	$97
3350-0030	Low pressure utility air hose reel w/spring rewind. Includes 50' 3/8" low pressure air hose, rollers, ball stop and and shut-off valve accessible from ground. Loc: [#LOC].	$1,327
3350-0032	Akron utility air hose reel. Includes 200' 3/8" hose and reel mounted rollers (captive type). Loc: [#LOC].	$1,410
3350-0033	Akron hydraulic hose reel for use with Hurst brand tools. Includes 100' 1/4" hose (up to 5,000 PSI) and rollers (captive type). Location: [#LOC]. Hose Color: [#COL].	$2,229

3350-0034	Hydraulic hose reel for use with Holmatro Core Technology tools. Reel model EF2220-17-18 w/ 100' of CORE hydraulic hose and a 30' CORE Holmatro pigtail. Location: [#LOC]. Hose Color [#COL].	$7,631
3350-0036	Hydraulic hose reel for use with Hurst Centaur brand tools. Includes 150' 1/4" hose (up to 10,000 PSI) and rollers (captive type). Location [#LOC]. Hose Color [#COL].	$5,865
3350-0040	12' Lead/Supply Line for high pressure hydraulic reel. To be used with 10,500 PSI hyd reels. Locate on reel in [#LOC].	$861
3350-0041	30' Lead/Supply Line for high pressure hydraulic reel. To be used with 10,500 PSI hyd reels. Locate [#LOC].	$1,279
3350-0042	Triple Hose Lead/Supply Line for TNT Reels. (1) 30' Lead/Supply Line for high pressure hydraulic reel. Locate officer side front bumper. Hose Color Blue. (2) 12' Lead/Supply Line for high pressure hydraulic reel. driver forward roof compartment (above L1 forward). Hose Color (1) Red and (1) Yellow. To be used with 10,000 PSI hyd reels.	$4,017
3350-0043	Akron hydraulic hose reel for use with Amkus brand tools. Includes 100' 1/4" hose (up to 10,500 PSI) and rollers (captive type). Location: [#LOC]. Hose Color: [#COL].	$3,439
3350-0045	Akron reel to be powder painted custom color. Requires approval from vendor on color. Location: [#LOC]. Reel Color: [#COL].	$121
3350-0046	8' Lead/Supply Line for high pressure hydraulic reel. To be used with hyrdraulic reels between 10,000 to 10,500 PSI. Locate: [#LOC].	$400
3350-0047	6' Lead/Supply Line for high pressure hydraulic reel. To be used with 10,500 PSI hyd reels. Locate on reel in [#LOC].	$809
3350-0048	Low Pressure Utility Air Hose Reel assembly with 250' low pressure air hose. Locate in [#LOC].	$1,900
3350-0049	Streamline fittings for Hurst reels and tools. This covers 3 hose to lead connections and 6 tool to reel connections.	$3,212
3350-0050	Dual hydraulic reel rewind switch panel. Includes mounting rewind switches towards center of bracket. Location: mounted between B1 hydraulic reels.	$248
3350-0051	Nexus couplings with swivels main reel hose only. Lead-ins to use standard TNT couplers.	$1,114
3350-0052	6' Lead/Supply Line for high pressure hydraulic reel. To be used with 10,000 PSI hyd reels. Locate on reel in [#LOC].	$789
3350-0053	40' Lead/Supply Line for low pressure hydraulic reel. To be used with 5,000 PSI hyd reels. Locate [#LOC].	$1,376
3350-0054	Hydraulic hose reel with Nexus couplings with swivels for use with TNT brand tools. Includes 60' 3/8" hose (up to 10,500 PSI) and rollers (captive type). Location: officer side front bumper. Hose Color: Black/Black with Blue shrink wrap every 10'.	$5,928
3350-0055	Hydraulic hose reel with Nexus couplings with swivels for use with TNT brand tools. Includes 100' 3/8" hose (up to 10,500 PSI) and rollers (captive type). Location: B1 driver side. Hose Color: Black/Black with Red shrink wrap every 10'.	$5,928
3350-0058	Streamline fittings for Hurst reels and tools. This covers hose to lead connections and 2 tool to reel connections.	$1,072
3350-0059	6' Lead/Supply Line for Holmatro Core hydraulic reel. To be used with Holmatro Core hyd reels. Locate on reel in [#LOC].	$1,009
3350-0060	Hydraulic hose reel for use with Holmatro Core Technology tools. Reel model EF2220-17-18 w/ 100' of CORE hydraulic hose. Location: [#LOC]. Hose Color [#COL].	$5,770
3350-0061	A set of hydraulic ports will be located in the front bumper and B1 compartment for use with Hurst Brand tools. Ports should have quick disconnects, be colored black so a lead may be plugged directly into them. Locate on driver side of front bumper and B1 driver side, up high (approximately 4" below and 2 " rearward of roll up door spool). Includes 30' Lead/Supply Line to be used with 5,000 PSI hydraulic ports. The Lead/Supply Line to be routed from the driver side front bumper and B1compartment to the forward area of L1.	$1,452
3350-0062	Hydraulic hose reel for use with Hurst brand tools. Includes rollers (captive type). Does not include hydraulic hose. Location: [#LOC].	$1,841
3350-0063	Low Pressure Utility Air Hose Reel assembly with 175' low pressure 1/2" air hose and mini panel. Locate in L2 offset rearward of cord reel, set back 24" from compartment opening with rewind switch located next to the breaker box, locate the air panel in L2 between lower air bag rack and adjustable shelves with protective shield above air panel, run reel plumbing to dunnage area forward of drivers side coffin compartment for the customer installed air compressor.	$2,539
3350-0065	Captive reel rollers for the air reel(s) shall be mounted through a bolt-on bracket. Includes rewind switch which is mounted on side wall. Location(s): [#LOC].	$722
3350-0066	16' Lead/Supply Line for low pressure hydraulic reel. To be used with 5,000 PSI hyd reels. Locate [#LOC].	$697
3350-0068	A lead line #8, 5,000 psi hydraulic hose line routed from IHT manifold to B2 lower rear wall.	$469
3350-0069	Hydraulic tool ports with TNT RV-120 remote actuation vlv. Quick connect fittings on vlv to be for Phoenix brand tools. vlv with tool fittings to be located on officer side of front bumper. Includes hyd supply lines run to B1.	$1,846
3350-0072	A lead line 5,000 psi hydraulic line routed from B2 lower forward wall to dunnage pan located MAS heat exchanger	$670
3350-0073	A return lead line 5,000 psi hydraulic line routed from B2 lower forward wall to dunnage pan located generator	$670
3350-0074	Raceway 8" x 8" (round) for hydraulic hose routing from dunnage area to chassis	$579
3350-0077	Hydraulic hose reel for use with Amkus brand tools. Includes 150' 1/4" hose (up to 10,500 PSI) and rollers (captive type). Location: [#LOC]. Hose Color: [#COL].	$5,058
3350-0078	Hydraulic reels to be mounted in aluminum tray with a cutout for roller assembly. A 1" lip around roller tray assembly to contain any fluids that may leak from hyd reel. Location [#LOC].	$389

3350-0081	Raceway for Air Lines from Driver and Officer Roof Top compartments to rearward L3 compartment for Dealer Supplied and Installed Air Fill System. Locate raceway in ceiling of L3, rearward and as far back as possible.	$579
3350-0083	Hydraulic hose reel for use with Amkus brand tools. Includes rollers (captive type). Does not include hydraulic hose. Location: [#LOC].	$2,130
3350-0084	16' Lead/Supply Line for high pressure hydraulic reel. To be used with 10,500 PSI hyd reels, lines are red and black in color. Compatible with Amkus tool brand. Locate on reel in [#LOC].	$1,009
3350-0085	16' Lead/Supply Line for high pressure hydraulic reel. To be used with 10,500 PSI hyd reels, lines are yellow and black in color. Compatible with Amkus tool brand. Locate on reel in [#LOC].	$1,009
3350-0088	40' Lead/Supply Line for high pressure hydraulic reel. To be used with 10,500 PSI hyd reels. Locate: [#LOC].	$1,625
3350-0089	CMW model 6011-W3-H1 dual reel, low pressure working air and hydraulic hose reel combo. Includes 100' of 300 PSI blue air hose and 100' of 10,500 PSI red/black hydraulic hose, compatible with Amkus tools. Located on ceiling of compartment B1 offset to officer side.	$6,389
3350-0090	CMW model 6011 dual hydraulic hose reel for use with 10,500 PSI Amkus tools. Reel SHALL NOT be supplied with hose or ball stops. Located on ceiling of compartment B1 offset to driver side.	$4,480
3350-0091	15' Lead/Supply Line for high pressure hydraulic reel. To be used with 10,500 PSI hyd reels. Locate on reel in [#LOC].	$942
3350-0092	Hydraulic hose reel for use with Holmatro brand tools. Includes 60' of Core Technology hose installed (up to 10,000 PSI) and rollers (captive type). Location: [#LOC]. Hose Color: [#COL].	$4,582
3350-0098	45' Lead/Supply Line for low pressure hydraulic reel. To be used with 5,000 PSI hyd reels. Locate [#LOC].	$1,433
3350-0099	Hydraulic hose reel for use with Holmatro Core Technology tools. Reel model EF2220-17-18 w/ 80' of CORE hydraulic hose. Location: [#LOC]. Hose Color [#COL].	$5,120
3350-0100	31' to 40' Core Technology Lead/Supply Line for high pressure hydraulic reel. To be used with 10,000 PSI hyd reels. Locate on reel in [#LOC].	$1,688
3350-0101	Up to 10' Core Technology Lead/Supply Line for high pressure hydraulic reel. To be used with 10,000 PSI hyd reels. Locate on reel in [#LOC].	$1,146
3350-0102	Hydraulic reel rewind switch. Switch located [#LOC].	$114
3350-0104	8' Lead/Supply Line for high pressure hydraulic reel. To be used with 10,500 PSI hyd reels. Locate on reel in [#LOC].	$776
3350-0106	Air reel w/electric rewind 100' of .375" hose. Breathing Air to plumbed to the B/A cascade system for low pressure utility air. Includes 100' 3/8" low pressure air hose, rollers and ball stop (controls for reel included with breathing air system). Location: Roof top compartment abve R4 rearward.	$1,900
3350-0107	Air reel w/electric rewind 100' of .375" hose for low pressure utility air. Dealer is responsible for plumbing air reel to the cascade system. Includes 100' 3/8" low pressure air hose, rollers and ball stop. Location: L4 ceiling offset forward rearwar of cord reel.	$1,900
3350-0108	CMW model 6011 dual hydraulic hose reels for use with 5,000 PSI tools shall be provided and installed. Includes two (2) sets of 100' 1/4" twinline hose (up to 5,000 PSI), hose guides and ball stops. Includes (2) 30' lead/supply lines. Location: [#LOC]. Hose Color: [#COL].	$11,678
3350-0109	A side out and hinged roller assembly. Roller shall be Hannay Reels, 4 way roller 2.5" opening mounted on a slide out bracket attached up high on the side walls of compartment L3.	$311
3350-0111	Bulk Head Fittings, including (2) 3' Pig Tails. Locate R3 back wall offset forward and 10" off compartment floor.	$799
3350-0117	Captive roller assemblies for (1)cord reel and (1) air reel mounted thru bolt-on bracket. Includes mounting rewind switches adjacent to each roller for it respective reel on bracket. Locate in [#LOC].	$843
3350-0119	Akron utility air hose reel. Capacity for 200' 3/8" hose (hose not included) and reel mounted rollers (captive type). Loc: L3 forward.	$1,167
3360-0013	Zico access ladder. Includes required step lights.	$1,673
3360-0050	Adjustable compartment dividers shall be installed in each roof compartment. The divider shall span from front to rear and be adjustable left to right. The use of Unistrut or equal materials as required shall provide the adjustability for each divider. The divider plate shall be 3/16" smooth aluminum. Locate (1) divider in each roof top compartment.	$920
3365-0002	Recessed folding ladder storage compartment located [#LOC]. Compartment sized to store a 10' ladder with feet.	$550
3365-0003	Overhead Zico storage rack to have a job color painted door.	$226
3365-0004	(2) pike pole storage tubes. Locate inboard side of ladder rack with pike pole hooks stored in the up position.	$432
3365-0005	Drop Down Fold-A-Tank Rack. Rack to hold [#LOC] gallon portable tank.	$1,524
3365-0010	(3) pike pole storage tubes. Locate inboard side of rack with pike pole hooks stored in the up position.	$648
3365-0011	Floor mounted roll-out tray. Includes 250lbs. tray capacity. Mount on [#LOC] floor.	$649
3365-0012	Recessed folding ladder and pike pole storage compartment located [#LOC]. Compartment sized to store a 10' ladder with feet and (2) pike poles.	$863
3365-0020	Zico electric drop-down ladder rack. Includes spacer brackets with ladder rack controller located on the officer side pump panel.	$4,875
3365-0021	Manual Operated Aluminum Drop Down Ladder Rack. Includes (2) assist lift/lower handles and securing pins (accessable from ground) on each end.Ladder hold downs to secure (1) 2-section extension and (1) roof.	$2,296
3365-0023	Ladder storage through tank for (1) 2-section 24' extension, (1) 14' roof, (1) 10' attic with feet and (2) pike poles. Reduces selected water tank capacity by approximately 250 gallons for pumpers and 300 gallons for tankers.	$2,773

3365-0024	Ladder storage thru tank for (1) 3-section 35' extension, (1) 14' roof, (1) 10' attic with feet and (2) pike poles. Reduces selected water tank capacity by approximately 250 gallons for pumpers and 300 gallons for tankers.	$3,019
3365-0025	Attic ladder mounting brackets (PR). Locate [#LOC].	$306
3365-0026	Zico pike pole mounting brackets (PR). Locate on top of Zico drop-down ladder rack.	$164
3365-0027	Zico attic ladder mounting brackets (PR). Locate on top of Zico drop-down ladder rack.	$347
3365-0028	Hard Suction Storage Rack. Driver side compartment top. Includes spring hold downs and scuff plates behind spring mounts (as applicable).	$368
3365-0029	Hard suction storage box (pr). Stored (1) each side below "T" of tank. Includes hinged door with push-button latch.	$542
3365-0030	Double Hard Suction Storage Rack for 10' hard suction hoses. Driver side compartment top. Includes spring hold downs with scuff plates (as applicable)	$729
3365-0031	Hard Suction Storage Rack. Officer side in adjustable track above ladders (if applicable). Includes spring hold downs and scuff plates.	$384
3365-0032	Hard Suction Storage Box. Stored below driver side "T" of tank. Includes hinged door with push-button latch.	$273
3365-0033	Recessed pike pole storage compartment located [#LOC]. Compartment sized to store (2) pike poles.	$445
3365-0034	(2) aluminum pike pole storage tubes. Locate [#LOC].	$316
3365-0035	Hard Suction Storage Rack. Officer side compartment top. Includes spring hold downs and scuff plates behind spring mounts (as applicable).	$368
3365-0040	SCBA/Fire Extinguisher storage rack. Locate in [#LOC]. To hold (6) bottles- (2) wide/(3)high. Bottles to be stored angled upward in the compartment. The bottom and sides are to include ribbed rubber inserts.	$499
3365-0041	Hard suction storage box. Located in the officer side hose bed. Includes drop down door (wired to door ajar) w/push-button latch(es), hose bed style top and nylatron flooring (no divider). Box to hold [#LOC] tube(s).	$1,563
3365-0043	Triple Hard Suction Storage Rack. Driver side compartment top. Includes spring hold downs and scuff plates behind spring mounts (as applicable).	$1,093
3365-0046	The driver side full length tunnel to store (2) 6" x 10' hardsuction hoses. Each to be stored individually and accessed by a vertically hinged diamond plate door with a push-button latch. Door to wired to the door ajar indicator in the cab.	$559
3365-0047	The driver side half length tunnel to store (3) backboards. Each to be stored individually with stop bracket 75" back from opening, composite material on floor and accessed by a vertically hinged door at rear with a push-button latch. Door to wired to the door ajar indicator in the cab.	$600
3365-0048	Hard Suction Storage Box. Stored below officer side "T" of tank. Includes hinged door with push-button latch.	$273
3365-0051	Portable Tank Storage Box. Located in the officer side hosebed. Includes drop down door (wired to door ajar) w/push-button latches, hosebed style top and nylatron flooring (no divider). Box to hold [#LOC] gallon portable tank.	$1,563
3365-0052	Over the hosebed ladder rack. Includes framing (with a sanded finish) and mounting points. Ladder storage box to be center mounted with diamond plate front box.	$1,959
3365-0056	Ladder storage thru tank for (2) 6" x 10' hardsuction hoses, (2) pike poles and (1) 10' attic ladder. Provide retaining straps to hold the hardsuctions stationary when stored. Reduces selected water tank capacity by approximately 250 gallons.	$3,111
3365-0057	The driver side full length tunnel to store (3) 6" x 10' hardsuction hoses. Each to be stored individually and accessed by a vertically hinged access door with a push-button latch. Door to wired to the door ajar indicator in the cab.	$838
3365-0058	Recessed pike pole storage compartment located [#LOC]. Compartment sized to store (3) pike poles.	$665
3365-0059	SCBA/Fire Extinguisher storage rack. Locate in [#LOC]. To hold (4) bottles- (2) wide/(2)high. Bottles to be stored angled upward in the compartment. The bottom and sides are to include ribbed rubber inserts.	$335
3365-0060	Ladders to be enclosed in pump compartment. Smooth plate box to enclose ladders in pump area.	$452
3365-0061	Hard Suction Storage Racks. Driver side hose bed side with adjustable tracks. Includes spring hold downs and scuff plates behind spring mounts (as applicable).	$846
3365-0062	Hard Suction Storage Box. Stored below driver side "T" of tank. Includes DP hinged door with push-button latch.	$711
3365-0063	Hard Suction Storage Box. Stored below officer side "T" of tank. Includes DP hinged door with push-button latch.	$711
3365-0065	(4) Hard Suction Storage Racks. Driver side hosebed side with adjustable tracks. Includes spring hold downs and scuff plates behind spring mounts (as applicable)	$1,340
3365-0066	The driver side half length tunnel to store (1) stokes basket and (2) backboards. Each to be stored individually and accessed by a vertically hinged diamond plate door with a push-button latch. Door to wired to the door ajar indicator in the cab.	$600
3365-0070	Recessed folding ladder and pike pole storage compartment located below officer side "T" of the tank. Compartment sized to store a 10' ladder with feet and (2) pike poles.	$1,291
3365-0071	Ladder storage thru tank for (1) 2-section 24' extension, (1) 14' roof, (1) 10' attic with feet and (2) pike poles, (1) 10' with d-handle and (1) 6' with d-handle. Reduces selected water tank capacity by approximately 250 gallons.	$3,048
3365-0072	Door aluminum smooth plate with d-ring latch for thru the tank ladder tunnel. Location: B1 compartment.	$1,123

3365-0073	(4) 6' pike pole storage tubes in the rear transverse compartment ceiling mounted. Locate for compartment L3 access with pike pole hooks stored in the down position. (1) pike pole caution tags to be provided, one each side mounted inside the compartment at the offset.	$1,035
3365-0074	SCBA/Fire Extinguisher storage rack. Locate in [#LOC]. To hold (6) bottles- (3) wide/(2)high. Bottles to be stored angled upward in the compartment. The bottom and sides are to include ribbed rubber inserts.	$499
3365-0075	Officer side vertical storage tunnel. For use with low hose bed. Tunnel to hold: [#LOC]. Includes vertical hinged rear diamond plate door(s) with push-button latch.	$1,966
3365-0077	(2) pike pole storage tubes. Locate outboard side of rack with pike pole hooks stored in the up position.	$432
3365-0078	(3) pike pole storage tubes. Locate outboard side of rack with pike pole hooks stored in the up position.	$648
3365-0079	2-arm ladder rack on officer side. The ladder rack includes amber lights on each end to visually indicate when the rack is in motion. Restricts the top folding step (if optioned) from closing completely. Includes mounting bracket (if required, matching rear compartment face or compartment wrap finish) for components mounted on rear compartment face.	$11,288
3365-0081	2-Arm Ladder Rack to be painted job color.	$2,910
3365-0083	Zico pike pole mounting brackets (PR). Locate [#LOC].	$164
3365-0085	Zico pike pole mounting brackets with straps (PR). Locate [#LOC].	$180
3365-0088	Double hard suction hose storage tray. Locate on inboard side of overhead ladder rack. Includes (2) securing straps per tray.	$806
3365-0090	Officer side half length vertical storage tunnel. For use with low hosebed. Tunnel to hold: (2) backboards, (1) AEL 12' 2-section ladder, (1) 4' D-handled pike pole, (1) 8' pike pole and (1) 6' pike pole. Includes vertically hinged rear diamond plate door with push-button latch. Pike poles to be located down low in tunnel with backboards and ladder located above.	$1,478
3365-0091	Recessed folding ladder storage compartment located officer side just below hosebed. Compartment sized to store a 10' ladder with feet.	$657
3365-0092	(2) pike pole storage tubes. Locate in driver side roof top compartment with pike pole hooks stored in the up position.	$432
3365-0093	Hard Suction Storage Box to be capable of storing one (1) 6" x 10` hard suction hose. Includes a rear smooth plate access door with push button latch. Door to be wired to door adjar indicator in cab. Located just below hosebed to [#LOC].	$542
3365-0094	Storage tunnel access (contents to be noted). Includes vertically hinged door (to match material of pump access door) with push-button latch(s) and wired to door ajar indicator. Door to [#LOC] of the body/water tank.	$302
3365-0095	Rear mount beside tank storage tunnel contents. Includes brackets capable of securing (1) two section, (1) roof, (1) 10' attic with feet and (2) pike pole tubes.	$2,509
3365-0096	Zico Hydraulic Drop Down Ladder Rack. Includes diamond plate spacer brackets with ladder rack controller located on the officer side pump panel.	$6,365
3365-0097	12' Hard suction hose storage tray. Locate on inboard side of overhead ladder rack. Includes (2) securing straps.	$504
3365-0098	12' Hard Suction Storage Rack. Driver side compartment top. Includes spring hold downs and scuff plates behind spring mounts (as applicable)	$551
3365-0099	SCBA/Fire Extinguisher storage rack. Locate in R1 mounted to lower ceiling below compartment offset. To hold (4) bottles to be stored angled upward in the compartment. The bottom and sides are to include ribbed rubber inserts. Each storage slot to be 11" wide x 11" high.	$1,729
3365-0100	Hard Suction Storage Rack. Officer side compartment top. Includes spring hold downs and scuff plates behind spring mounts (as applicable). Rack to hold 5' hard suction.	$252
3365-0101	Officer side vertical storage tunnel. For use with low hosebed. Lower section of tunnel to hold: 2-Section 24', 14' roof, 10' attic and (2) pike poles. Upper section of tunnel to hold: 2-Section AEL-10 attic ladder and (1) 300' of 1.75" DJ hose. Upper section includes ladder stop 90" back from opening and bolt-in divider between ladder and hose storages. Includes vertically hinged rear diamond plate door(s) with push-button latch(es). The diamond compartment top of tunnel to be hinged for access to dry lay of hose.	$3,128
3365-0102	SCBA/Fire Extinguisher storage rack. Locate in [#LOC]. To hold (4) bottles- (4)wide/(1)high. Bottles to be stored angled upward in the compartment. The bottom and sides are to include ribbed rubber inserts.	$335
3365-0103	SCBA/Fire Extinguisher storage rack. Locate in [#LOC]. To hold (6) bottles- (6)wide/(1)high. Bottles to be stored angled upward in the compartment. The bottom and sides are to include ribbed rubber inserts.	$499
3365-0104	Double hard suction hose storage tray. Locate (1) each side on inboard side of overhead ladder rack(s). Includes (2) securing straps per tray. For use with 13' hard suction hoses.	$2,210
3365-0106	Pike pole pin. Pin to prevent pike poles form vibrating out of stored position.	$144
3365-0107	SCBA/Fire Extinguisher storage rack. Locate in [#LOC]. To hold (12) bottles- (4) wide/(3)high. Bottles to be stored angled upward in the compartment. The bottom and sides are to include ribbed rubber inserts.	$995
3365-0108	10' folding ladder with feet. Locate in officer side roof top compartment.	$657
3365-0109	(4) pike pole storage tubes. Locate inboard side of rack with pike pole hooks stored in the up position.	$860
3365-0110	Recessed pike pole storage compartment located below officer side "T" of the tank. Compartment sized to store (3) pike poles.	$665
3365-0111	Hard suction hose storage tray. Locate on [#LOC]. Includes (2) securing straps. For use with 13' hard suction hoses.	$970

3365-0112	Over the hosebed ladder rack. Includes framing (with a sanded finish) and mounting points. Ladder storage box to be adjustable side to side with diamond plate front box. The ladder storage rack to have locking points of driver side outboard, center and officer side outboard. The framework of the ladder rack to be 9.5" high.	$3,029
3365-0114	Recessed pike pole storage compartment located [#LOC]. Compartment sized to store (3) pike poles. Pike pole box to be 7" deep.	$1,211
3365-0115	Ladder storage thru tank for (1) 2-section 24' extension, (1) 14' roof, (1) 10' attic with feet and (3) pike poles. Reduces selected water tank capacity by approximately 250 gallons.	$2,835
3365-0116	Ladder tunnel to extend to rear of body (over pump/plumbing). Extension to be aluminum and bolt-on for removal for pump maintenance.	$818
3365-0118	(3) pike pole storage tubes. Locate [#LOC].	$474
3365-0120	SCBA/Fire Extinguisher storage rack. Locate in [#LOC]. To hold (12) bottles- (6) wide/(2)high. Bottles to be stored angled upward in the compartment. The bottom and sides are to include ribbed rubber inserts.	$995
3365-0121	Hosebed storage box for (1) scoop stretcher, (3)backboards and (4) pike poles. Scoop stretcher located in lower area of storage with stop located 67" back, backboards located in middle area with stop 74" back, and pike poles located in upper area for (2) 6' and (2) 8' pike poles. Includes vertically hinged door (wired to door ajar) with push-button latches. Located on officer side of hosebed.	$1,563
3365-0122	Officer side vertical storage tunnel. For use with low hosebed. Tunnel to hold: 2-Section 24', 14' roof, 10' attic and (2) pike poles. Upper storage area to have hinged diamonad plate top for storage of misc. items. Includes vertically hinged rear diamond plate door(s) with D-ring latch.	$3,037
3365-0124	Recessed pike pole storage compartment located below officer side compartment top. Compartment sized to store (2) pike poles. Recessed box to be 10" high for Boston Roof Hooks.	$1,009
3365-0125	Officer side vertical storage tunnel. For use with low hosebed. Tunnel to hold: 2-Section 24', 14' roof, 10' attic, (6) pike poles and (2) 6" x 10' hardsuction hoses (individually vertically stacked). (2) pike poles will be in ladder tunnel and (2) in each hard suction storage. Includes vertically hinged rear diamond plate door(s) with push-button latch.	$2,788
3365-0126	Pike pole tube(s) on overhead ladder rack to be mounted flush with rear of body.	$320
3365-0128	(1) pike pole storage tubes. Locate [#LOC].	$159
3365-0129	Officer side half length vertical storage tunnel. For use with low hosebed. Tunnel to hold: (2) backboards, (1) 4' D-handled pike pole, (1) 8' pike pole and (1) 6' pike pole. Make box for 4' D-handle pike pole 56" long. Includes vertically hinged rear diamond plate door with push-button latch. Pike poles to be located down low in tunnel with backboards located above.	$1,478
3365-0134	Double Hard Suction Storage Rack. Driver side compartment top. Includes spring hold downs with scuff plates (as applicable). For use with 11' hard suction hoses.	$1,294
3365-0135	Stop bracket set for Zico HLAS ladder rack. Optional bracket for additional ladder rack stability in the up position.	$213
3365-0137	Pike pole. Locate (1) pike pole on officer side compartment top with pike pole hook stored in the up position. Mount with tulip clip(s) for use with D-handle pike pole.	$93
3365-0138	SCBA/Fire Extinguisher storage rack. Locate in [#LOC]. To hold (9) bottles- (3) wide/(3)high. Bottles to be stored angled upward in the compartment. The bottom and sides are to include ribbed rubber inserts.	$749
3365-0140	Stokes Basket Storage Box. Located in the officer side hosebed. Includes Nylon black strap, hosebed style top and nylatron flooring (no divider). Box to hold (1) Junkin JSA-200 stokes basket. Includes stop located 86" back from opening. Vinyl hosebed cover to extend down over this storage.	$2,060
3365-0142	Officer side hosebed storage box to store a (1) 26' 3-section, (1) 12' roof, (1) 10' attic ladder and (3) pike poles. Includes vertically hinged rear diamond plate door with push-button latches.	$2,790
3365-0143	Hard Suction Storage Rack. Locate: [#LOC]. Includes (1) spring hold down and scuff plates behind spring mount (as applicable). Includes diamond plate box with air deflector to hold end of hose in place.	$735
3365-0148	Backboard Storage Box. Located in the driver side hosebed. Includes drop down door (wired to door ajar) w/push-button latch, hosebed style top and composite flooring. Box to hold (1) backboard. Includes stop bracket approximately 74" back from opening. Includes short hosebed divider located on top of storage area.	$1,775
3365-0162	Hard suction racks (one each side) with job color painted box ends (rearward of body only). Racks to be positioned on compartment top so forward coupling end rest flush with end of forward compartment top. Each rack to have (1) spring hold down located as far forward as possible (no hold down at rear). Racks to include extension so rear coupling rest on the rack in the stowed position. Rearward box to be smooth plate and designed to fit around the rack extension. Size box to be 10"x 10"x 10".	$1,923
3365-0163	Hard Suction Storage Box Vert. Located in the [#LOC] hose bed. Includes vertical hinged door (wired to door ajar) w/push-button latches and nylatron flooring. Box to hold (2) 10' hard suction hoses vertical stacked.	$1,563
3365-0164	Backboard Storage Box. Located in the officer side hosebed. Includes drop down door (wired to door ajar) w/push-button latch, hosebed style top and composite flooring. Box to hold (1) backboard. Includes stop bracket approximately 74" back from opening. Includes 45 degree angle plate at rear of the backboard storage.	$1,775
3365-0165	Double hard suction storage rack. One (1) rack located above the other. Officer side compartment top. Includes spring hold downs with scuff plates (as applicable).	$729
3365-0173	Hard Suction Storage Box. Stored below officer side just below the hosebed. Includes hinged door with push-button latch.	$584

3365-0174	Hold down brackets to secure a (3) section extension, (2) section extension and roof ladder. Requires additional ladder bracket height due to 6 sections of ladders.	$631
3365-0175	Backboard Storage Box. Located in the officer side hose bed. Includes vertical hinged door (wired to door ajar) w/push-button latch, hose bed style top if applicable to hose bed depth or smoothplate aluminum if no hose shall be stored above and composite flooring. Box to hold (2) backboards.	$1,775
3365-0176	Hosebed Storage Box. Located in the officer side hosebed. Includes drop down door (wired to door ajar) w/push-button latch(es), hosebed style top and nylatron flooring (no divider). Box to hold (1) stokes basket and (3) backboards. Includes stop bracket approximately 88" back from opening. Stokes basket 86" long x 24" wide x 8" high, backboards will stow inside stokes basket.	$1,775
3365-0177	Hold down brackets to secure a (3) section extension ladder.	$193
3365-0178	Storage box for (1) 8' Dry Wall pike pole. Located in officer side roof top compartment.	$297
3365-0179	Officer side vertical storage tunnel behind reduced upper depth right side compartments. Tunnel to hold: 24' 2-section and 14' roof, plus (2) pike poles and a folding ladder. Includes vertically hinged rear smooth plate door with bent D-ring latch.	$1,966
3365-0180	Backboard storage box located in the driver side of hosebed 9.75" off hosebed side wall. Storage to be 22" wide x 5" high. Includes drop down door (wired to door ajar) w/push-button latch, hosebed style top and composite flooring. Box to hold (2) backboards. Includes stop bracket approximately 74" back from opening. Includes 45 degree angle plate at rear of the backboard storage.	$1,775
3365-0181	Stop bracket to be located approximately 50" back in upper section of driver side of storage tunnel above the hard suction hoses.	$124
3365-0183	Hard suction storage rack. Locate [#LOC]. Includes NFPA retaining strap(s).	$258
3365-0184	Zico hydraulic drop down portable tank rack. Rack located to [#LOC] of body. Rack sized for [#COL] gallon aluminum frame portable tank. The control switching to be located on the side pump panel with the rack being in full view of the operator during operations.	$5,316
3365-0185	Zico overhead ladder rack. Includes electrical relay with cover in compartment adjacent to the storage rack. Locate rack to [#LOC] of body. The control switching to be located at the pump module area with the rack being in full view of the operator during operations.	$6,377
3365-0186	Zico overhead portable tank rack. Includes electrical relay with cover in compartment adjacent to the storage rack. Locate rack to [#LOC] of body. Rack sized for [#COL] gallon aluminum frame portable tank.	$6,377
3365-0187	Zico drop down rack to have diamond plate cover between outboard rack assemblies.	$619
3365-0188	Zico drop down rack to have smooth plate cover between outboard rack assemblies. Cover to be painted job color.	$755
3365-0189	Manual drop-down portable tank storage rack. Includes forward and rearward securing clamps with manual releases. Locate rack to [#LOC] of body. Rack sized for steel framed [#COL] portable tank.	$1,813
3365-0190	Manual drop down rack to have diamond plate cover over the forward, rearward, upper and outboard sides. Includes hand rails along the outboard front and rear and (1) on each end mounted on the upper area.	$596
3365-0191	Manual drop down rack to have smooth plate cover over the forward, rearward, upper and outboard sides. Includes handrails along the outboard front and rear and (1) on each end mounted on the upper area. Cover to be painted job color.	$873
3365-0192	Internal aluminum frame portable tank storage with vertically hinged smooth plate door painted job color (wired to door ajar) with D-ring latch. Access door to be located to the rear of the [#LOC] body. Included is a composite material floor overlay and a tank stop for use with a [#COL] aluminum frame portable storage tank.	$723
3365-0193	Portable storage tank thru water tank. To be capable of storing a [#COL] aluminum frame portable storage tank. Storage thru tank will reduce overall gallon capacity of water tank.	$2,143
3365-0194	Double hard suction storage rack. Locate [#LOC]. Includes NFPA retaining strap(s).	$546
3365-0195	Hard suction hose storage tray. Locate on inboard side of [#LOC] overhead storage rack. Includes (2) NFPA retaining straps.	$406
3365-0196	Ladder storage in hosebed for the following: (1) 2-section extension, (1) roof ladder, (1) attic and (2) pike poles. Extension and roof ladders stored nested. Includes (1) hosebed divider with squared off upper rear, vertically hinged (to swing into hosebed area) door with latch (wired to door ajar indicator) and composite material overlay on hosebed flooring. Upper area open and main hosebed cover to be used to cover top area of ladder storage area. Storage located to [#LOC] of hosebed.	$1,093
3365-0197	Portable storage tank in hosebed for the following: [#COL] gallon aluminum frame tank. Includes (1) hosebed divider with squared off upper rear, vertically hinged (to swing into hosebed area) door with latch (wired to door ajar indicator) and composite material overlay on hosebed flooring. Upper area open and main hosebed cover to be used to cover top area of storage area. Storage located to [#LOC] of hosebed.	$1,093
3365-0198	Storage box for (1) 10' length of hard suction hose. Includes vertically hinged door with latch (wired to door ajar indicator). Reduces selected water tank capacity by approximately 100 gallons on Tankers. Locate to [#LOC] below "T" of water tank.	$616
3365-0199	Zico electric drop-down ladder rack. Rack located to [#LOC] of body. The control switching to be located on the side pump panel with the rack being in full view of the operator during operations.	$5,316
3365-0202	Hard Suction Storage Rack. Driver side in adjustable track above ladders. Includes spring hold downs and scuff plates.	$384
3365-0203	Zico electric drop-down hard suction rack. Rack located to [#LOC] of body. The control switching to be located on the side pump panel with the rack being in full view of the operator during operations. The rack includes (2) main rack mounted 10' trays.	$5,316

3365-0206	Storage tunnel capable of holding: (1) 2-Section, (1) Roof, (1) Attic, (2) pike poles, (1) backboard storage sleeve between 2-section and roof ladder and (1) 8' block storage with stop above 2-section ladder in Officer Side Storage Tunnel. Includes ladder tunnel door to hinge to officer side of truck.	$736
3365-0208	Horizontal ladder bracket. Location and type of ladder: in officer side of hosebed storage pan to hold Little Giant model 17.	$255
3365-0209	Officer side vertical storage tunnel. For use with low hosebed. Tunnel to hold: 2-Section 24', 14' roof, 10' attic and (2) pike poles. Includes vertically hinged rear diamond plate door with push-button latch. Upper storage area to have an open top and run full legnth of the body. Upper area to have hosebed style flooring.	$3,016
3365-0214	Hard suction storage thru tank for (2) 5" x 15' hard suction hoses. Includes vertical hinged door wired to door ajar with push button latch. Reduces selected water tank capacity by approximately 200 gallons.	$2,773
3365-0217	Officer side vertical storage tunnel. For use with low hosebed. Tunnel to hold: 3-Section 35', 14' roof, 10' attic and (3) pike poles. Pike poles to be stored in upper storage area. Includes vertically hinged rear diamond plate door(s) with push-button latch.	$1,966
3365-0218	Recessed D-handle pike pole storage compartment located below officer side compartment top. Compartment sized to store (2) 6' D-handle pike poles.	$665
3365-0219	Diamond plate storage compartment located on officer side compartment top. Compartment sized to store (1) 10' ladder with feet and (2) 6' D-handle pike poles.	$665
3365-0220	Storage box for (1) 6" x 10' hard suction hose. Includes vertically hinged swing-out door with push-button latch (wired to door ajar). Box to be smooth plate and painted job color. Located [#LOC].	$530
3365-0221	Driver side vertical storage tunnel. For use with low hosebed. Tunnel to hold: 2-Section 24', 14' roof, 10' attic and (2) pike poles. Includes vertically hinged rear diamond plate door(s) with push-button latch.	$1,966
3365-0222	Upper hosebed storage area above driver side compartments and officer side ladder/storage tunnel or compartments as applicable. Upper storage areas to have an open top and run length of the hosebed area. Includes hosebed style flooring.	$1,915
3365-0223	Hard Suction Storage Rack. Officer side on compartment top. Rack to be 118" in length and be held back 9" from the front of the compartment top. Includes spring hold downs and scuff plates.	$384
3365-0226	Hosebed ladder storage box with diamond plate top. Located centered in hosebed and to secure from driver to officer: (1) 10' attic w/feet (in a box) w/(2) 10' pike pole tubes mounted on top, (1) PRL-12 & (1) PEL3-24. Ladders to be stored on beam. Included are (2) hosebed dividers with squared ends, diamond plate top and a vertically hinged diamond plate door (hinged to officer side) wired to the door ajar indicator.	$1,300
3365-0229	Hosebed Storage Box. Located in the officer side hosebed between aluminum hosebed cover center divider and officer side hosebed wall (Approx 34.875" W X 12" interior height). Includes drop down door (wired to door ajar) w/push-button latches, hosebed style top, composite flooring, (1) vertical divider full depth of hosebed held 12" short of rear - located 5" off center divider to hold (3) 10' pike pole tubes. (1) horizontal divider full depth of hosebed and approx 29.625" wide X approx 7.875" off hosebed floor to form upper and lower storage. Lower storage to have a stop at 72". Upper storage to have a vertical divider approx 18" off driver side divider with a stop at 72" for backboard storage. Storage box to be sealed as tight as possible from water and road grime.	$2,613
3365-0236	Officer side vertical storage tunnel behind reduced upper depth right side compartments. Tunnel to hold: 24' 2-section and 14' roof, plus (4) pike poles and a folding ladder. Includes vertically hinged rear smooth plate door with bent D-ring latch.	$2,281
3365-0238	Folding ladder and pike pole storage compartment located in driver side of hosebed. Includes drop down door with push button latch. Compartment sized to store a 10' ladder with feet and (2) pike poles.	$863
3365-0245	Pike pole tubes in officer side storage tunnel to be modified to hold (1) ARH-60 and (1) ARH-72 pike poles.	$195
3365-0246	Officer side vertical storage tunnel behind reduced upper depth right side compartments. Tunnel to hold: 24' 2-section and 14' roof, plus (2) pike poles and a folding ladder. Includes vertically hinged rear 3/16" treadplate door with bent D-ring latch.	$2,099
3365-0253	Ladder storage thru tank for (2) 6" x 10' hardsuction hoses. Reduces selected water tank capacity by approximately 150 gallons.	$1,570
3365-0254	Hard suction storage box with cargo net cover at rear. Located in B1 compartment to be in-line with thru the tank tunnel.	$574
3365-0258	Recessed pike pole storage compartment located officer side "T" of the tank. Compartment sized to store (3) pike poles. Center pike pole will be a multi -purpose" hook.	$665
3365-0259	Recessed pike pole storage compartment located officer side just below the hosebed. Compartment sized to store (2) pike poles.	$445
3365-0260	Ladder storage thru tank for (1) 2-section 24' extension, (1) 14' roof, (1) 10' attic with feet, (3) pike poles and (1) backboard. Reduces selected water tank capacity by approximately 300 gallons.	$3,019
3365-0262	Double Hard Suction Storage Rack for 8' hard suction hoses. Driver side compartment top. Includes spring hold downs with scuff plates (as applicable)	$789
3365-0265	Recessed storage compartment located officer side just below hosebed. Compartment sized to store (1) 10' ladder with feet offset to left and (1) 6' pike pole offset to right, tube to be set back 6" from opening.	$787
3365-0267	Officer side vertical storage tunnel. For use with low hose bed. Tunnel to hold: [#LOC]. Includes vertically hinged rear smooth plate door(s) with push-button latch.	$1,966

3365-0271	Ladder storage box in driver side of hosebed. Dimensions to be 25" wide x 8" high x length of hosebed. Includes ladder stop 66" back from opening and diamond plate drop down door with push button latches (wired to door ajar indicator) and composite material overlay on hosebed flooring.	$1,093
3365-0272	Hard Suction Storage Box. Located in the driver side hosebed. Includes vertical hinged door (wired to door ajar) w/push-button latches and nylatron flooring. Box to hold two (2) 6" X 10' hard suction hoses.	$1,563
3365-0274	Hard Suction Storage Box. Located horizontal in the officer side hosebed. Includes vertical hinged door (wired to door ajar) w/push-button latches and nylatron flooring. Box to hold two (2) 6" X 14' hard suction hoses.	$1,563
3365-0275	Hard suction storage rack for (1) 6" X 14' suction hose. Locate [#LOC]. Includes NFPA retaining strap(s).	$391
3365-0276	Zico pike pole mounting brackets (PR). Locate on top of Zico drop-down ladder rack. Brackets to be for D-ring pike poles.	$164
3365-0278	Officer side vertical storage tunnel. For use with low hosebed. Tunnel to hold: 2-Section 24', 14' roof, 10' attic and (2) pike poles. Includes vertically hinged rear diamond plate door(s) with push-button latch. The pike poles and attic ladder to be stored below the 2-section and roof ladders. Ladder tunnel will not extend to top of the body, the area above the ladder tunnel to have hosebed style flooring.	$3,016
3365-0280	Hard Suction Storage Box. Located horizontal in the officer side hosebed. Includes vertical hinged door (wired to door ajar) w/push-button latches and nylatron flooring. Box to hold two (2) 6" X 10' hard suction hoses.	$1,563
3365-0281	Hard Suction Storage Box. Located horizontal in the officer side hosebed. Includes vertical hinged door (wired to door ajar) w/push-button latches and nylatron flooring. Box to hold two (2) 6" X 13' hard suction hoses.	$1,563
3365-0283	Divider Long. To run full length of hose bed above ladder tunnel (front to rear).	$487
3365-0284	Officer side vertical storage tunnel behind reduced upper depth right side compartments. Tunnel to hold: 28' 2-section and 16' roof, (2) pike poles and a folding ladder, plus two 10' lengths of 6" hard suction hose above ladders together with a skinny backboard. Where ladders extend into the pump enclosure, they shall be enclosed from the elements with aluminum treadplate.	$1,685
3365-0285	Officer side vertical storage tunnel. For use with low hosebed. Tunnel to hold: 2-Section 20', 12' roof, 10' attic and (2) pike poles. Includes vertically hinged rear smooth plate door (to accommodate graphics/striping) with push-button latch. Upper storage area to have an open top and run full length of the body. Upper area to have hosebed style flooring.	$3,016
3365-0286	Officer side vertical storage tunnel behind reduced upper depth compartments. Tunnel to hold: 24' 2-section and 14' roof, plus (2) pike poles and a folding ladder. Above ladders is storage area for a sheet rock hook and a pike pole with D-handle, both 4' in length. Stops shall be provided ahead this storage area approximately 60" from the rear opening to prevent these items from sliding forward during transport. Includes vertically hinged rear smooth plate door with bent D-ring latch.	$2,059
3365-0289	Hard suction hose storage tray. Locate on inboard side of overhead ladder rack. Includes spring hold downs and scuff plates behind spring mounts (as applicable).	$429
3365-0290	Ladder storage thru tank for (1) 3-section 30' extension, (1) 14' roof, (1) 10' attic with feet and (2) 10' pike poles. Reduces selected water tank capacity by approximately 300 gallons for pumpers and 350 gallons for tankers.	$2,773
3365-0292	Hard Suction Storage Box. Located in the driver side hosebed. Includes vertical hinged door (wired to door ajar) w/push-button latches and nylatron flooring. Box to hold one (1) 6" X 12' hard suction hoses.	$782
3365-0293	Cover diamond plate for hydraulic ladder rack power supply. Location: [#LOC].	$199
3365-0294	There shall be a metal plate mounted to the side of the portable tank rack to assist in the application of the NFPA stripe.	$165
3365-0295	Manual drop down portable tank storage rack. Includes forward and rearward securing clamps with manual releases. Locate rack to [#LOC] of body. Rack sized for an aluminum framed [#COL] portable tank.	$1,813
3365-0297	(1) Pike pole storage tube, pike pole hook stored in the up position. (1) Dry wall hook storage using brackets to secure in place rather than tube. Locate inboard side of rack.	$535
3365-0298	(5) Pike pole storage tubes. Locate inboard side of rack with pike pole hooks stored in the up position.	$1,232
3365-0299	Hard suction storage box. Located in the officer side hose bed. Includes a swing open door, vertical hinged on the left hand side (inboard) and wired to door ajar w/push-button latch(es), hose bed style top and nylatron flooring (no divider). Box to hold [#LOC] tubes.	$1,563
3365-0302	Provision to store (4) Fire Department supplied 50' lengths of 2-1/2" high rise hose packs on right side compartment top.	$1,136
3365-0303	Four (4) pike poles and a folding ladder tucked behind ground ladders on the adjustable ladder tracks.	$1,102
3365-0304	Hard suction storage within the hosebed. (1) Hard suction tube shall be located on each side of the hosebed center divider. The rear and top hosebed covers shall be used for access.	$1,563
3365-0305	Provision to store (4) Fire Department supplied 50' lengths of 2-1/2" high rise hose packs on right side compartment top. (6) PAC ADJUSTAMOUNT brackets to secure hose.	$1,488
3365-0306	Backboard storage sleeve with containment strap(s). Located in L1 and R1 compartments just below compartment offset to be approximately 9" high x 27" wide as clearance permits. Locate as far forward as possible.	$1,178

3365-0307	Hard suction storage box, horizontal side by side. Located in the officer's side hose bed. Includes lift-up door (wired to door ajar) w/bent D-ring latch, hose bed style top and flooring. Box to hold (2) 6" x 10' long tubes.	$1,563
3365-0308	Hard Suction Storage Rack. Officer side in adjustable track below ladders (if applicable). Includes spring hold downs and scuff plates.	$384
3365-0309	Hard Suction Storage Box with long handle tool storage trough with stop at 72". Stored at rear panel driver side for two (2) hoses. Includes vertical hinged smooth plate door and bent D-ring latch.	$668
3365-0310	Hard suction storage box, smooth plate side wall construction painted job color. Located on the [#LOC]. Includes vertically hinged door(s) (wired to door ajar) w/D-Ring latch(s). Box to hold (3) tubes and to extend to the back side of the L2 compartment and to be approximately the same height as L1, L2 compartments.	$1,563
3365-0311	Hard suction storage box with (2) pike poles (pr). Stored (1) each side below "T" of tank. Includes hinged door with push-button latch.	$1,025
3365-0312	Ladder storage thru tank for AlcoLite ladders (1) 3-section 35' extension, (1) 16' roof, (1) 10' attic with feet and (2) pike poles. Reduces selected water tank capacity by approximately 250 gallons for pumpers and 300 gallons for tankers.	$3,019
3365-0316	Storage box for (1) 15' length of hardsuction hose. Includes vertically hinged door with latch (wired to door ajar indicator). Locate [#LOC] side below "T" of water tank.	$718
3365-0317	OBSOLETE - USE HYDRAULIC - Zico electric drop down portable tank rack. Rack located to [#LOC] of body. Rack sized for [#COL] gallon aluminum frame portable tank. The control switching to be located driver side rear compartment face with the rack being in full view of the operator during operations.	$5,316
3365-0319	Hard Suction Storage Rack. Driver side compartment top. Includes spring hold downs and scuff plates behind spring mounts (as applicable).	$368
3365-0320	Storage box on officer side compartment top with hinged full length side hinged down with butterfly latches (wired to door ajar). Box to be approximately 116" long x 12" high x 12" deep. Storage is for 250' of 2.5" DJ hose with nozzle for hi-rise pac with black dri-deck flooring.	$1,009
3365-0321	Horizontal ladder bracket, Includes .187" smooth aluminum boot painted black durabak with ladder hold down. Location and type of ladder: [#LOC].	$305
3365-0322	Recessed New York hook and pike pole storage compartment located officer side just below the "T" of the tank to include a smooth plate door with thumb latch(s). Compartment sized to store (2) Fire Hooks Unlimited New York Hook Model RH-6 and RH-8 and (2) pike poles.	$863
3365-0323	Double hard suction storage rack. Two (2) 2.5" or 3" x 10` hard suction hoses. One (1) next the other horizontally mounted. Includes spring hold downs with scuff plates (as applicable). Locate: Driver side compartment top.	$729
3365-0324	Hard suction storage boxes welded one each side to upper body hose bed side sheets, to be painted as applicable. Includes vertically hinged brushed stainless steel rear access doors and aluminum hose trays with forward travel limit stops. Requires minimum 88" high pumper body.	$2,573
3365-0325	Officer side vertical storage tunnel behind reduced upper depth right side compartments. Tunnel to hold: 35' 3-section and 14' roof, (2) pike poles and a folding ladder. Where ladders extend into the pump enclosure, they shall be enclosed from the elements with aluminum treadplate. Includes vertically hinged rear smooth aluminum door with bent D-ring latch.	$1,966
3365-0326	Recessed pike pole storage compartment located below officer side "T" of the tank. Compartment sized to store (2) pike poles.	$665
3365-0328	Officer side vertical storage tunnels. For use with low hose bed. Tunnels to hold [#LOC]. The upper ladder tunnel shall be full length of hose bed, same width as lower ladder tunnel. The upper ladder tunnel compartment shall be fully enclosed except for an open top/roof which will be open to the elements. Includes vertically hinged rear .1875" smooth plate doors with D-ring latch on each door accessible at the rear of body.	$2,092
3365-0329	Ladder storage thru tank for (1) 2-section 24' extension, (1) 16' roof, (1) 10' attic with feet and (2) pike poles. Reduces selected water tank capacity by approximately 250 gallons for pumpers and 300 gallons for tankers.	$2,773
3365-0331	Recessed folding ladder and pike pole storage compartment located right rear of body up high. Compartment sized to store a 10' ladder with feet and (2) 12' pike poles.	$1,000
3365-0332	Recessed pike pole storage compartment located left rear of body up high. Compartment sized to store (4) 10' pike poles.	$886
3365-0333	Backboard storage for use with low hose bed stroage tunnel only. Storage for (1) backboard vertically in officer side storage tunnel. Includes stop bracket at the front.	$361
3365-0334	Ladder Storage Box. Located in the officer side hosebed. The top shall be enclosed using the hosebed cover, the rear access shall be included in the vinyl rear flap as part of the hose bed cover (hinged door not included), The hosebed cover and rear flap shall be sold separately. Box to hold (1) Alcolite PEL 24' 3-section, (1) Alcolite PRL 12' roof, (1) Alcolite FL 10' attic ladder, (2) backboards and (2) pike poles.	$2,694
3365-0335	Miscellaneous storage in hosebed above the ladder tunnel. Upper area open and main hosebed cover to be used to cover top area of the storage area. There is to be a bolted end plate at the rear of the storage area, horizontal adjustable tracks 60" from the rear mounted forward with a divider.	$356
3365-0337	Two (2) pike poles and a folding ladder tucked behind ground ladders on the adjustable ladder tracks on the officer's side outside of the hose bed.	$1,102
3365-0338	Hard Suction Storage Box. Located in the [#LOC] hose bed. Includes vertical hinged door (wired to door ajar) w/push-button latches (without nylatron flooring as preferred by customer). Box to hold (2) 10' hard suction hoses.	$1,563

3365-0339	Hard Suction Storage Box. Located in the [#LOC] hose bed. Includes vertical hinged door (wired to door ajar) w/D-Ring latch(s) and Nylatron flooring. Box to hold (2) 10' hard suction hoses.	$1,631
3365-0340	Dual hard suction hose storage with stops located (above ladders) in the officer side ladder storage tunnel. Includes a common taller rear access door (wired to door ajar) w/bent D-ring deadbolt type latch.	$1,104
3365-0342	Dual hard suction hose storage with stops located in the officer side upper header. Includes a lift-up rear access door (wired to door ajar) w/bent D-ring latch.	$1,775
3365-0344	Hard suction storage box. Located in the officer side hose bed. Includes a swing open diamond plate door, vertically hinged on the right hand side (outboard) and wired to door ajar w/push-button latch(es), hose bed style top and nylatron flooring (no divider). Box to hold [#LOC] tubes.	$1,563
3365-0345	Officer side horizontal storage tunnel between top of tank and below hose bed floor. Tunnel to hold: up to a 24' 2-section and 14' roof, up to (3) pike poles and a folding ladder. Includes a horizontally hinged lift-up rear smooth plate door with bent D-ring latch and a gas tube hold-open.	$2,099
3365-0346	Storage box for (1) 12' length of hard suction hose. Includes vertically hinged door with latch (wired to door ajar indicator). Locate to [#LOC] below "T" of water tank.	$616
3365-0347	Recessed folding ladder storage compartment located driver side just below hosebed. Compartment sized to store a 10' ladder with feet.	$657
3365-0348	Ladder storage box in driver side of hosebed. Dimensions to be 25" wide x 8" high x length of hosebed. Includes ladder stop 66" back from opening and diamond plate drop down door with a D-ring latch (wired to door ajar indicator) and composite material overlay on hosebed flooring.	$1,093
3365-0349	Stop bracket to be located approximately 80" back in the lower area of the driver side storage tunnel.	$124
3365-0350	Hard suction storage box (pr). Stored (1) each side below "T" of tank. Storage boxes shall be lined with plastic liner and include hinged door with push-button latch. Inside compartment and tube tunnel to be enlarged in depth to fit strainers to be pre-connected as stored.	$1,187
3365-0352	Portable Tank Storage Box. Located in the officer side hosebed. Includes vertically hinged door (wired to door ajar) w/push-button latches (hinge to the exterior and latch to the interior), hosebed style top and nylatron flooring (no divider). Box to hold [#LOC] gallon aluminum framed Fol-da-tank portable tank.	$1,563
3365-0353	Double hard suction hose storage tray. Locate inboard side of overhead ladder rack(s) (1) stacked above the other. Includes (2) securing straps per tray. For use with 10' hard suction hoses.	$2,210
3365-0354	Ladder storage thru tank for (1) 2-section 24' extension, (1) 14' roof, (1) 10' attic with feet. Ladders shall be stored vertically or on their side (ILO horizontal/flat). (1) 10' Folding ladder and (2) pike poles stacked over and under each other adjacent ladder storage. Tunnel shall be approx centered in rear body. Reduces selected water tank capacity by approximately 300 gallons.	$3,074
3365-0355	Hard suction Storage Box located in the drivers side roof top compartment. The storage to be boxed off inside roof top compartment. Includes vertical hinged smooth plate door (wired to door ajar) w/push-button latch. Storage to hold [#LOC] 6" x 10' hard suction hoses.	$2,007
3365-0356	Ladder storage thru tank for (1) 2-section 24' extension, (1) 14' roof, (1) 10' attic with feet and (2) pike poles. Provide retaining straps to hold contents stationary. Reduces selected water tank capacity by approximately 250 gallons for pumpers and 300 gallons for tankers.	$2,848
3365-0360	Driver side vertical storage tunnel behind reduced upper depth left side compartments. Tunnel to hold: up to (3) 10' lengths of 6" hard suction hose. Includes vertically hinged rear smooth plate door with bent D-ring latch.	$2,059
3365-0361	Zico hydraulic drop down portable tank rack. Rack located to [#LOC] of body. Rack sized for [#COL] gallon aluminum frame portable tank. The control switching to be located driver side rear compartment face with the rack being in full view of the operator during operations.	$5,459
3365-0363	Hard suction storage rack. Locate:[#LOC]. Includes NFPA retaining strap(s). For use with 15' hard suction hose.	$503
3365-0364	Ladder storage box. Located in the officer side hose bed. Includes vertical hinged door (wired to door ajar) w/push-button latch(es), hose bed style top and nylatron flooring (no partition). Box to hold (1) 20' 2-Section and (1) 12' roof.	$1,563
3365-0365	Officer side vertical storage tunnel. For use with low hosebed, fully enclosed and extended to pump area with drain holes forward in tunnel flooring. Tunnel to hold: 2-Section 24', 14' roof, 10' attic and (2) pike poles. Includes vertically hinged rear smooth plate door(s) with push-button latch. The pike poles and attic ladder to be stored below the 2-section and roof ladders. Ladder tunnel will not extend to top of the body, the area above the ladder tunnel to have hosebed style flooring.	$3,309
3365-0366	Double Hard Suction Storage Rack. Driver side compartment top. Includes spring hold downs with scuff plates (as applicable). For use with 14' hard suction hoses.	$1,294
3365-0367	Zico hydraulic drop down portable tank rack. Rack located to [#LOC] of body. Rack sized for [#COL] gallon aluminum frame portable tank. The control switching to be located on the side pump panel with the rack being in full view of the operator during operations.	$5,316
3365-0368	Zico hydraulic drop down portable tank rack. Rack located to [#LOC] of body. Rack sized for [#COL] gallon aluminum frame portable tank. The control switching to be located officer side rear compartment face with the rack being in full view of the operator during operations.	$5,316
3365-0371	The storage tunnel directly behind the upper area of the officer side compartments shall be fully enclosed as it extendes into the pump module area with drain holes forward in tunnel.	$590
3365-0373	(2) D-handle pike pole storage tubes 10' on length. Locate outboard side of ladder rack with pike pole hooks stored in the up position.	$497
3365-0374	SCBA/Fire Extinguisher storage rack. Locate in R1 mounted to lower ceiling below compartment offset. To hold (6) bottles to be stored angled upward in the compartment. The bottom and sides are to include ribbed rubber inserts. Each storage slot to be 9.25" wide x 11" high.	$2,593

3365-0375	Hard suction storage box. Located in the driver side hose bed. Includes a swing open diamond plate door, vertical hinged on the right hand side (inboard) and wired to door ajar w/"D"-ring latch(es), hose bed style top and nylatron flooring (no divider). Box to hold [#LOC] tubes.	$1,563
3365-0377	Fire extinguisher storage rack to hold (3) extinguishers in a single horz row. The rack shall be raised 3" on the open end to allow the extinguishers to slide back into the box at an angle. Bottom and sides to include ribbed rubber inserts. Each opening to have a vertically mounted strap. The rearward opening shall be 15" wide, the middle and forward opening to be 10" wide. The opening shall be 18" high. The top shall be flat and have a 2" lip up for storing items as a permanent shelf. Locate floor mtd in [#LOC].	$654
3365-0378	Ladder Storage Box. Located in the officer side hosebed. The top shall be enclosed using hosebed style top. Includes drop down door (wired to door ajar) W/ D-ring latch. Box to hold (1) Alcolite FEL 24' 2-section, (1) Alcolite FRL 14' roof, (1) Alcolite FL 10' attic ladder and (5) 10' pike poles (NY hooks).	$2,694
3365-0379	Fire extinguisher storage rack to hold (3) extinguishers in a single horz row. Bottom and sides to include ribbed rubber inserts. Each opening to have a vertically mounted strap. The top shall have a 1" lip up for storing items.Locate floor mtd in [#LOC].	$654
3365-0380	Zico pike pole mounting brackets (PR). Locate outboard on top of Zico drop-down ladder rack.	$164
3365-0382	Hose bed storage compartment for Low Hosebed body. Contents stored as follows from left to right: (1) Model 17 Little Giant ladder extended, (2) pike poles (6' with drywall hook, 10' with dry wall hook)above the Little Giant ladder, (1) 10' folding ladder above the Little Giant ladder, (2) 6" x 10" hard sution hoses.	$2,395
3365-0383	Officer side vertical storage tunnel behind reduced upper depth right side compartments. Tunnel to hold: 24' 2-section and 14' roof, plus (2) pike poles and a folding ladder. Does not include a door.	$1,731
3365-0384	Single hard suction hose storage with stop located (above ladders) in the officer side ladder storage tunnel. Includes a common taller rear access door (wired to door ajar) w/bent D-ring deadbolt type latch.	$1,104
3365-0387	Hard Suction Hose Rack for 2.5" or 3" Hose located inboard on hydraulic ladder rack (Each)	$238
3365-0389	Hard suction hose storage tray. Locate on top of Zico drop-down ladder rack. Mount secure straps further outboard to accommodate longer hard tube or 10' hard suction tube with a Kochek BS60 Barrel strainer pre-attached.	$811
3365-0390	Ladder storage box. Located in the driver side hose bed. Includes vertically hinged door (wired to door ajar) w/push-button latch(es), hose bed style top and nylatron flooring (no partition). Box to hold (1) 22' 3-Section, (1) 10' roof and (1) 8' folding ladder	$1,563
3365-0392	Storage Tunnel. A storage tunnel shall be provided, constructed of break formed .125" aluminum sheet, located behind the officer upper compartments. Includes a hinged rear access door (wired to door ajar) with a 2-point bent D-ring latch.	$2,331
3365-0395	Fire Extinguisher storage rack. Locate in B1 mounted to ceiling and/or cpmpartment walls as applicable to drop down and exit just below the roll up door when opened. To hold (3) bottles- (3)wide/(1)high. Each box to be 11" high x 11" wide. The bottom and sides are to include ribbed rubber inserts. The storage box shall have a drop down door with a latch to secure the cylinders in place during transit.	$412
3365-0397	Officer side vertical storage tunnels. For use with low hose bed. Tunnels to hold: [#LOC]. The upper ladder tunnel shall be full length of hose bed, same width as lower ladder tunnel. The upper ladder tunnel compartment shall be fully enclosed except for an open top/roof which will be open to the elements.	$2,292
3365-0398	Hard suction storage box (pr). Stored (1) each side below "T" of tank. Includes hinged door with push-button latch. Tube tunnels to extend through raised rear enhanced extended compartment steps to gain additional capacity for longer length tube storage. Tube tunnels to fit One (1) 6" X 12' Hard suction tube on each side.	$1,255
3365-0400	Officer side vertical storage tunnels. For use with low hose bed. Tunnels to hold: [#LOC]. The upper tunnel to have enclosed storage for (2) 10' X 6" hard suction hoses (stacked) with (2) pike poles with multipurpose hooks (recessed 5" fwd of door). The upper area above and forward of the fully enclosed hard suction / pike pole storage to be open top/roof which will be open to the elements includes drain hole(s) as required. Includes vertically hinged rear .1875" smooth plate doors with D-ring latch on each door accessible at the rear of body.	$3,053
3365-0401	Officer side vertical storage tunnel behind reduced upper depth right side compartments. Tunnel to hold: 24' 2-section and 16' roof, plus a folding ladder. Includes vertically hinged rear smooth plate door with bent D-ring latch.	$1,816
3365-0403	Zico model HLAS-HS-2KIT, Double hard suction hose storage tray. Locate on inboard side of overhead ladder rack. Includes (2) securing straps per tray.	$794
3365-0404	Hosebed storage box. Located in the center of the hosebed. To hold (1) backboard, (1) 10' pike poles,(1) 8' pike pole, (1) 6' NY style pike pole, (1) 6' pike pole and (1) 10' attic ladder with access from a vertically hinged diamond plate door (wired to door ajar) with a push-button latch.	$1,776
3365-0405	Hose tray storage with stop located (above ladders) in the officer side ladder storage tunnel. Includes a common taller rear access door (wired to door ajar) w/bent D-ring deadbolt type latch.	$1,104
3365-0406	Portable Tank Storage Box. Located in the driver side hosebed. Includes drop down door (wired to door ajar) w/push-button latches, hosebed style top and nylatron flooring (no divider). Box to hold [#LOC] gallon portable tank.	$1,563
3365-0408	Hard Suction Storage Box. Located in the officer side hosebed. Includes vertical hinged door (wired to door ajar) w/push-button latches and nylatron flooring. Box to hold one (1) 6" X 10' hard suction hose.	$782

3365-0409	Ladder storage box. Located in the officer side hose bed. Includes vertically hinged diamond plate door (wired to door ajar) w/push-button latch, open top and nylatron flooring (no partition). Box to hold (1) 20' 2-Section and (1) 12' roof, (1) 10 foot attic ladder with feet. and (2) 10' pike pole tubes.	$1,881
3365-0410	Ladder Storage Box. Located in the officer side hosebed. The top shall be enclosed using the hosebed cover, the rear access shall be equipped with an outboard vertical hinged door with thumb latch and moon spring hold open, The hosebed cover and rear flap shall be sold separately. Box to hold (1) Alcolite PEL 24' 3-section, (1) Alcolite PRL 12' roof with separete divider and (1) Model 13 Little Giant	$2,694
3365-0411	Driver side ladder storage tunnel. Includes area for a vertically stored 24' 2-section'and 14' roof. Includes vertically hinged rear smooth plate door with push-button latch.	$1,136
3365-0414	Backboard stop bracket to be located approximately 80" back in officer side of ladder tunnel.	$228
3365-0416	Hosebed ladder storage box with diamond plate top. Located centered in hosebed and to secure from driver to officer: (3) 2.5" x 10' hard suction tubes, (2) 10' pike pole tubes mounted down low, (1) 925-A 22' 3 Sect & (1) 775-A 10' Roof. Ladders to be stored on beam. Included are (2) hosebed dividers with squared ends, diamond plate top and a vertically hinged diamond plate door (hinged to officer side) wired to the door ajar indicator.	$1,300
3365-0417	Zico attic ladder mounting brackets (PR). Locate [#LOC].	$218
3365-0420	Dual hard suction hose storage with stops located in the drivers side upper header. Includes a lift-up rear access door (wired to door ajar) w/bent D-ring latch.	$1,775
3365-0422	Ladder storage through tank for (1) 2-section 24' extension, (1) 14' roof, (1) 10' attic with feet,(2) pike poles, and (2) backboards. Reduces selected water tank capacity by approximately 350 gallons.	$3,224
3365-0423	Recessed folding ladder storage compartment located [#LOC]. Compartment sized to store a 10' ladder with feet.	$550
3365-0425	Officer side vertical storage tunnel. For use with low hose bed. Tunnel to hold: 2-section 24', 14' roof, 10' attic, (2) pike poles, (2) NY Hooks, (1) piercing nozzle, area for fire brooms and area for shovels. Includes vertically hinged rear brushed stainless steel door(s) with push-button latch.	$2,470
3365-0426	(3) Hard Suction Storage Racks. Driver side hosebed side with adjustable tracks. Includes spring hold downs and scuff plates behind spring mounts (as applicable).	$1,006
3365-0427	Hard suction storage box. Located on the driver side compartment top. Includes vertical hinged door at the rearward of the apparatus as installed that swings outward (wired to door ajar) w/push-button latch, To be constructed of .125" thick aluminum tread plate with nylatron flooring. Box to hold one (1) 6 inch dia. x 10 foot hard tube.	$1,350
3365-0428	Hard suction storage box. Located on the officer side compartment top. Includes vertical hinged door at the rearward of the apparatus as installed that swings outward (wired to door ajar) w/push-button latch, To be constructed of .125" thick aluminum tread plate with nylatron flooring. Box to hold one (1) 6 inch dia. x 10 foot hard tube.	$1,350
3365-0429	Hard suction Storage Box located in the driver side roof top compartment. The storage to be boxed off inside roof top compartment. Includes vertical hinged smooth plate door (wired to door ajar) w/push-button latch. Storage to hold (2) 6" X 12' hard suction tubes.	$2,007
3365-0430	Extra wide folding ladder/rake pole box and (2) additional pike poles (total of 4) stored outboard of 2-section ladder located in Officer Side Tunnel. Compartment sized to store a 10' ladder with feet with 72" long are for rake pole and (2) additional pike poles.	$623
3365-0431	Hard suction storage box. Located in the officer side hose bed. Includes vertically hinged diamond plate door (wired to door ajar) with D-Ring latch, hose bed style top and nylatron flooring (no divider). Box to hold 3 tube(s).	$1,563
3365-0434	Ladder Storage Box. Located in the officer side hosebed. The top shall be enclosed using the hosebed cover, the rear access shall be equipped with an INBOARD, vertical hinged, door with thumb latch and moon spring hold open, The hosebed cover and rear flap shall be Sold Separately. Rear Flap does not cover rear ladder box door. Box to hold (1) Alcolite PEL 24' 3-section, (1) Alcolite PRL 12' roof with separete divider, (1) Model 13 Little Giant, (1) 6` Firehook model MPH-6 pike pole w/gas shut-off end, and (1) 8` Firehook model MPH-8 pike pole w/gas shut-off end.	$3,010
3365-0435	Nylon black strap with clip release for use with Drv/Ofc side storage tunnel.	$87
3365-0436	Ladder storage box. Located in the officer side hose bed. Includes vertically hinged door (wired to door ajar) w/push-button latch(es) and nylatron flooring (no partition). Box to hold (1) 20' 2-Section and (1) 12' roof.	$1,563
3365-0437	Officer side vertical storage tunnel. For use with low hose bed. Tunnel to hold: [#LOC]. Includes vertically hinged rear diamond plate door(s) with D-ring latch.	$2,015
3365-0438	Storage tunnel above B1 capable of holding: (1) Ferno Washington Model 71 stokes basket. Install (1) divider 26" off driver side wall full length with nylatron on floor and stop set at 90". Right side remaining area will have a stop set at 72".	$987
3365-0439	Recessed folding ladder and pike pole storage compartment located right rear of body up high. Compartment sized to store a 10' ladder with feet and (3) 10' pike poles. The pike poles shall be (1) mounted from the top and (2) at the bottom of the box.	$1,216
3365-0440	Zico HHS-TM-1 hard suction storage rack. Locate on the Zico Hydraulic Portable Tank System. Includes NFPA retaining strap(s).	$435
3365-0441	Zico model HLAS-HS-1KIT, Single hard suction hose storage tray. Locate on inboard side of overhead ladder rack. Includes (2) securing straps.	$501

3365-0442	Officer side vertical storage tunnel. For use with low hosebed. Tunnel to hold: 2-Section 24', 14' roof, 10' attic,(2) pike poles, and (1) backboard. Includes vertically hinged rear diamond plate door(s) with push-button latch. Includes upper area of ladder tunnel to have (2) roof top compartments. Includes hinged raised compartment lids with turn latches. Each lid to have (1) bracket mounted light and to be wired to door ajar indicator in cab.	$3,410
3365-0443	Hard suction storage rack for (1) 6" X 8' suction hose. Locate [#LOC]. Includes NFPA retaining strap(s).	$279
3365-0445	Single hard suction hose storage without stop located (above ladders) in the officer side ladder storage tunnel. Includes a common taller rear access door (wired to door ajar) w/bent D-ring deadbolt type latch. Used for extra long suction hose (up to 14').	$1,059
3365-0446	Single hard suction hose storage (without stops) located in the drivers side upper header. This allows for longer suction hose. Includes a lift-up rear access door (wired to door ajar) w/bent D-ring latch.	$1,459
3365-0447	Recessed folding ladder and pike pole storage compartment located officer side just below "T" of the tank. Compartment sized to store a 10' ladder with feet and (2) pike poles. To have a hinged smoothplate door with a thumb latch hinged to open downward tied to door ajar and park brake per NFPA.	$863
3365-0451	(2) 10' pike pole storage tubes. Locate driver side in adjustable tracks with pike pole hooks stored in the up position. Outboard tube to be fitted for a NY hook.	$432
3365-0454	Stokes/backboard storage with stops located in the officers side upper header. Includes a lift-up rear access door (wired to door ajar) w/bent D-ring latch.	$1,645
3365-0455	Dual hard suction hose storage (without stops) located in the officer side upper header. This allows for longer suction hoses (maximum lenght of 12'). Includes a lift-up rear access door (wired to door ajar) w/bent D-ring latch.	$1,809
3365-0456	Storage box on officer side compartment top offset rearward over wheel well with open top access and eight (8) seatbelt style straps to secure hi-rise hose pacs. Storage box shall be constructed of .125 aluminim tread plate with a sanded finish inside and shall have a back wall 7.00" tall and a front wall of 2.00" tall. the forward and rearward walls shall be angled from the back wall down to the front wall. The storage box shall have an aluminum slat in the bottom of the tray to water shed from stored hose and shall be mounted raised slightly from the compartment top as mounted to allow for drainage holes to be positioned in the bottom of the tray assembly. Box shall be the usable width of the compartment top x 136" long.	$1,856
3365-0457	Four (4) pike poles and a folding ladder tucked behind ground ladders on the adjustable ladder tracks.	$2,605
3365-0459	Box storage rack. Locate in [#LOC]. (2) wide/(2) high. Each compartment to be 8" wide x 10" high. Box to be angled upward in the compartment. No ribbed rubber.	$335
3365-0460	Box storage rack. Locate in [#LOC]. (1) wide/(2) high. Each compartment to be 12" wide x 10" high. Box to be angled upward in the compartment. No ribbed rubber.	$289
3365-0461	Ladder storage box. Located in the officer side hose bed. Includes vertically hinged door (wired to door ajar) w/push-button latch(es), hose bed style above the ladder storage and nylatron flooring (no partition). Box to hold (1) 24' 2-Section, (1) 14' roof, (1) 10' attic and (2) pike poles.	$2,557
3365-0465	Officer side vertical storage tunnels. For use with low hose bed. Lower Tunnel to hold: 2-section 24`, 14` roof, 10` attic and (3) pike poles, (1) standard, (2) with multipurpose hooks (recessed 5" fwd of door). The upper tunnel to have enclosed storage for (1) 10` X 6" hard suction hose with (1) pike pole with multipurpose hook (recessed 5" fwd of door). The area below the hard suction storage for a removable hose tray (not included) for customers "high raise packs" with a stop set at 72" from access opening. Includes vertically hinged rear .188" smooth plate doors with D-ring latch on each door accessible at the rear of body.	$3,053
3365-0466	One (1) pike pole and one (1) multipurpose hook and a folding ladder tucked behind ground ladders on the adjustable ladder tracks on the officer's side outside of the hose bed.	$1,102
3365-0467	Hard suction storage in hosebed for the following: (3) 6" x 10' hard suction hoses. Includes (2) hosebed divider with squared off upper rear, vertically hinged (to swing outboard hosebed area) door with latch (wired to door ajar indicator) and composite material overlay on hosebed flooring. Upper area open and main hosebed cover to be used to cover top area of storage area. Storage located in the center of the hosebed.	$1,580
3365-0468	Internal ladder tunnel storage with vertically hinged smooth plate door (wired to door ajar). Access door to be located to the rear of the officer's side body. Storage tunnel capable of holding: (2) 12' Roof, (1) 10' Attic, (1) 6' roof hook pole, (1) 8' pike pole and (1) 10' pike pole.	$2,667
3365-0469	Ladder storage through tank for (1) 2-section 24' extension, (1) 14' roof, (1) 10' attic with feet, (2) pike poles and (2) 10' X 6" hard suction hoses. Reduces selected water tank capacity by approximately 450 gallons for pumpers.	$5,386
3365-0470	Hard suction Storage Box located in the officer side roof top compartment. The storage to be boxed off inside roof top compartment. Includes vertical hinged smooth plate door painted job color as applicable (wired to door ajar) w/D-ring latch. Storage to hold (2) 6" X 10' hard suction tubes horizontal side by side..	$2,007
3365-0471	Upper hosebed storage area above ladder or storage tunnel on officer side body. Upper storage area to have an open top and run length of the hosebed area. Includes hosebed style flooring and matching rear vinyl or cargo net cover of same style/color as main hosebed.	$958
3365-0472	Recessed folding ladder and pike pole storage compartment located right rear of body up high. Compartment sized to store a 10' ladder with feet and (3) up to 12' in length pike poles.	$1,317
3365-0473	Upper hosebed storage area above driver side compartments. Upper storage area to have an open top and run length of the available hosebed area as optioned. Includes hosebed style flooring.	$959

3365-0474	Officer side vertical storage tunnel. For use with low hosebed, fully enclosed and extended to pump area with drain holes forward in tunnel flooring. Tunnel to hold: 2-Section 24', 14' roof, 10' attic and (2) D-Handle pike poles. Includes vertically hinged rear smooth plate door(s) with push-button latch. The attic ladder to be stored below the 2-section and roof ladders. The D-Handle pike poles to be located on the hose bed wall outboard of ground ladders. Ladder tunnel will not extend to top of the body, the area above the ladder tunnel to have hosebed style flooring.	$3,309
3365-0475	Hard suction storage box, vertical, over/under. Located in the officer's side hose bed. Includes a swing open door, vertical hinged on left side (wired to door ajar) w/trigger latch, hose bed style top and flooring. Box to hold (2) 6" x 10' long tubes.	$1,563
3365-0476	Ladder Storage Box. Located in the officer side hosebed. The top shall be enclosed using hosebed style top. Includes vert hinged door (wired to door ajar) w/ thumb latch(s). Box to hold (1) one 24' 2-section, (1) one 14' roof, (1) one 10' folding attic ladder, (4) four pike poles, and (2) two 6" x 10' hard suction hose above ladders.	$2,995
3365-0477	Hard suction storage box, vertical, over/under. Located in the driver's side hose bed. Includes a swing open door, vertical hinged on right side (wired to door ajar) w/trigger latch, hose bed style top and flooring. Box to hold (2) 6" x 10' long tubes (not included).	$1,563
3365-0478	Hard suction storage box with strainer storing capacity. Located in the driver side hose bed. Includes a swing open diamond plate door, vertically hinged on the right hand side (inboard) and wired to door ajar w/thumb latch(es), diamond plate top and nylatron flooring (no divider). Box to hold [#LOC] tubes with strainer.	$1,563
3365-0479	Hardsuction Storage in hosebed for the following: (2) 6" x 10' Hoses. Includes (1) hosebed divider with squared off upper rear, vertically hinged (to swing into hosebed area) door with latch (wired to door ajar indicator) and composite material overlay on hosebed flooring. Upper area open and main hosebed cover to be used to cover top area of hardsuction storage area. Storage located to officer of hosebed.	$1,093
3365-0480	Hard suction storage in hosebed for the following: (2) 6" x 10' hard suction hoses. Includes (1) hosebed divider with squared off upper rear, vertically hinged (to swing outboard hosebed area) door with latch (wired to door ajar indicator) and composite material overlay on hosebed flooring. Upper area open and main hosebed cover to be used to cover top area of storage area. Storage located to officer side of hosebed.	$1,093
3365-0481	Zico hydraulic drop down portable tank rack. Rack located to officer of body. Rack sized to be a portable tank 169" long. The control switching to be located officer side rear compartment face with the rack being in full view of the operator during operations.	$5,805
3365-0482	The driver side Storage Box to store (2) backboards. Each to be accessed by a vertically hinged diamond plate door with a push-button latch. Door to wired to the door ajar indicator in the cab.	$502
3365-0483	Officer side vertical storage tunnel. For use with low hosebed. Tunnel to hold: 2-Section 24', 14' roof, 10' folding attic, (2) pike poles, and (1) backboard. Includes vertically hinged rear smooth plate door (to accommodate graphics/striping) with push-button latch. Upper storage area to have an open top and run full length of the body. Upper area to have hosebed style flooring.	$3,016
3365-0487	A bolt on aluminum fabricated sign plate mounted to the exterior vertical surface of the hydraulic ladder lift structure. This shall provide a mounting surface for lights along with an area for graphics. Sign plate shall be painted job color to match the ladder lift.	$746
3365-0489	Trash Hook storage compartment located driver side just below hosebed. Compartment sized to store a 10' Trash Hook with D-Handle with smooth plate vertically hinged door and D-Ring latch.	$657
3365-0492	Storage box on officer side compartment top with 2 half length side hinged down access doors with 2 butterfly latches per door (wired to door ajar). Box to be approximately 149" long x 12" high x 12" deep without center divider. Storage is for 2.5" DJ hose with nozzle for hi-rise pack remaining extra space for tool storage. With black dri-deck flooring.	$1,330
3365-0493	(2) 10' pike pole storage tubes. Locate inboard bottom side of ladder rack on old style adjustable track with pike pole hooks stored in the down position.	$589
3365-0495	Storage tunnel capable of holding: (1) Husky brand steel frame 2100 gallon folding tank. Tunnel to be 35" tall by standard width and full length of the available body. Forward end of tunnel to be capped with a removable plate to seal tunnel from debris and a 10.5" wide (minimum or as applicable to tank model) U channel top and bottom centered in tunnel with Nylon pads to be supplied on the bottom. Door to be plate aluminum matching ladder tunnel with push button latch tied to door ajar. Tank storage to be Driver Side Storage Tunnel.	$1,545
3365-0498	Ladder Tunnel to be completely enclosed to prevent road grime, water or snow from entering into the storage tunnel.	$452
3365-0501	Dual hard suction hose storage with stops located in the officer side upper header. Designed to hold (1) 11' and (1) 7' hoses (not included).	$1,775
3365-0502	Four (4) pike poles and a folding ladder located under stokes basket module on floor of upper left side body compartment.	$1,102
3365-0503	Recessed pike pole storage compartment located [#LOC]. Compartment sized to store (2) pike poles.	$445
3365-0504	Three (3) pike poles and a folding ladder tucked behind ground ladders on the adjustable ladder tracks.	$2,605
3365-0505	Hard Suction Storage Box. Located horizontal in the drivers side hosebed. Includes vertical hinged door (wired to door ajar) with D-Ring style latches and nylatron flooring. Box to hold two (2) 6" X 10' hard suction hose.	$1,563
3365-0506	Hard suction storage box. Located in the officer side hose bed. Includes a swing open door, vertical hinged on the right hand side (outboard) and wired to door ajar w/push-button latch(es), hose bed style top and nylatron flooring (no divider). Box to hold two (2) tubes.	$1,563
3365-0507	Horizontal stokes basket bracket installed on driver side of hosebed cover for Washington Ferno model 71 stokes basket. Will include aluminum boot and stokes hold down fasteners.	$496

3365-0508	Ladder storage thru tank for (1) 2-section 24' extension, (1) 14' roof, (1) 10' attic with feet,(2) 10' pike poles and (1) Combo step-extension (Duo Safety 300-A) ladder. Ladders shall be stored horizontally. Ladder storage is approximately 270 gallons.	$3,263
3365-0510	(2) aluminum pike pole storage tubes. (2) 48" pike pole tubes to be Located just below, rearward, and across lower B1 compartment top and to extend into L4 and R3 compartments for dealer supplied and installed trash hooks. Dealer is to supply and install required retaining devise for hooks.	$316
3365-0512	Hard suction storage box. Located in the driver side hose bed. Includes a swing open diamond plate door, vertical hinged on the right hand side (inboard) and wired to door ajar w/push button latch(es), and nylatron flooring. Box to hold one (1) 6" X 10' tube.	$1,109
3365-0513	Hard suction storage box. Located in the officer side hose bed. Includes a swing open diamond plate door, vertical hinged on the left hand side (inboard) and wired to door ajar w/push button latch(es), and nylatron flooring. Box to hold one (1) 6" X 10' tube.	$1,109
3365-0514	Fire extinguisher storage rack to hold (3) extinguishers in a single horz row. Each storage area to be 11" wide x 11" high x 25" deep with a trough in the bottom (same as used in E-ONE wheelwell bottle storage. Bottom and sides of the trough to include ribbed rubber inserts. Each opening to have a vertically mounted strap. Bolt to the bottom of the adjustable shelf in R1 forward end.	$654
3365-0515	Full width horizontal storage tunnel between top of tank and below hose bed floor. Tunnel to hold: (3) 10' lengths of 6" hard suction hose, side by side on the right side. Includes horizontally hinged drop down rear smooth plate door with bent D-ring latch, and bolt-on SS partition protection for water tank fill tower(s).	$2,765
3365-0517	Recessed pike pole storage compartment located on the officer side between the upper and lower compartments. Compartment sized to store (1) 6' NY Roof Hook and (1) 6' Drywall Hook. The box to be 5" deep.	$445
3365-0518	Fire Extinguisher storage rack. Locate in R2 offset forward. To hold (4) bottles- (2) wide/(2)high. Bottles to be stored angled upward in the compartment. The bottom and sides are to include ribbed rubber inserts. Each storage slot to be 11" wide x 10" high.	$872
3365-0519	Upper hosebed storage area above driver side compartments. Upper storage area to have an open top and run length of the available hosebed area as optioned. Includes slotted flooring for storage of 17' Little Giant Ladder with divider set 8.5", leaving 4.25" outboard for customer supplied and installed backboards. Dealer to supply stops for backboards.	$1,325
3365-0521	Officer side ladder storage tunnel. Includes area for a vertically stored 35' 3-section', 16' roof and 10' folding ladders plus storage for two (2) standard pike poles.	$1,606
3365-0522	Ladder storage box in driver side of hosebed. Dimensions to be 25" wide x 9" high x length of hosebed. Includes ladder stop 66" back from opening and diamond plate drop down door 8" high (1" open space between top of door and top of box) with a D-ring latch (wired to door ajar indicator) and composite material overlay on hosebed flooring.	$1,230
3365-0523	Recessed folding ladder and pike pole storage compartment located right rear of body up high. Compartment sized to store a 10' ladder with feet, (3) 10' pike poles, and (1) 8' "D" handle trash hook.	$1,886
3370-0023	Tracks for adjustable shelf and/or adjustable tray in single depth or rescue style single depth compartment. Location: [#LOC].	$184
3370-0025	Permanent shelf. Locate in [#LOC].	$96
3370-0026	Adjustable shelf. For compartments that are full height/full depth or lower compartments with full depth. Location: [#LOC].	$238
3370-0027	Tracks for adjustable shelf and/or adjustable tray in the lower area of the compartment. Location: [#LOC].	$94
3370-0028	Tracks for adjustable shelf and/or adjustable tray in the upper area of the compartment. Location: [#LOC].	$51
3370-0029	Adjustable shelf. For compartments with upper shallow depth. Location: [#LOC].	$121
3370-0032	Upper shelf floor overlays. Includes 1/8" smooth plate full width and length of shelf and spaced .5" off shelf floor. Locate: (2) L1, (2) L3, (2) R1, (2) R3 and (1) over top of L1 tool box.	$1,092
3370-0033	Adjustable shelf modification for shelf to have 1" lips. Location: B1 upper shelf.	$108
3370-0034	Shelf adj full transverse. Locate in [#LOC].	$487
3370-0035	Shelf adjustable 1/2 depth in transverse compartment. Locate in [#LOC].	$388
3370-0037	Horizontal track(s) in the upper area of the compartment. Location: [#LOC].	$72
3370-0039	Adjustable shelf. For upper area of compartments with multiple depths. Location: [#LOC].	$238
3370-0040	Adjustable shelf for single depth or rescue style single depth compartment. Location: [#LOC].	$238
3370-0044	All exterior compartments on rescue body will have Unistrut in each compartment unless inapplicable.	$1,577
3370-0046	Adjustable shelf. Shelf to be notched into extended side compartment area. For compartments with upper shallow depth. Location: R3 upper.	$456
3370-0048	Adjustable shelf with 2" lips around entire shelf. For compartments that are full height/full depth or lower compartments with full depth. Location: [#LOC].	$510
3370-0050	Tracks for adjustable shelf and/or adjustable tray in transverse compartment. Location: B1.	$364
3370-0051	Tracks for adjustable shelf and/or adjustable tray in 1/2 or 2/3rds depth of transverse compartment. Location: [#LOC].	$276
3370-0052	Adjustable shelf (J-Style) for non-transverse compartments 16" or greater in depth. Location: [#LOC].	$238
3370-0053	Adjustable shelf (C-Style) for non-transverse compartments up to 15.99" in depth. Location: [#LOC].	$121
3370-0054	Tracks for adjustable shelf and/or adjustable tray in compartments 16" or greater in depth. Location: [#LOC].	$184
3370-0055	Tracks for adjustable shelf in shallow compartments up to 15.99" deep. Location: [#LOC].	$94

3370-0056	Tracks for adjustable shelf and/or adjustable tray in compartments 16" or greater in depth. Tracks to run from floor to just below compartment offset/ceiling. Location: [#LOC].	$184
3370-0057	Tracks for adjustable shelf in shallow compartments up to 15.99" deep. Tracks to run from floor/compartment offset tube to just below compartment ceiling. Location: [#LOC].	$94
3370-0063	Tracks for electrical cord reel in the upper area of the compartment. Location: [#LOC].	$93
3370-0064	Adjustable shelf with 2" lips around entire shelf. Location: L3 upper shelves to foward area of compartment only.	$510
3370-0065	Tracks for adjustable shelf and/or adjustable tray in single depth or rescue style single depth compartment. Position tracks within compartment for optimal adjustability. Track height from floor and/or ceiling may be impacted by other items located within the compartment or by general body construction. Location: [#LOC].	$184
3370-0119	Fixed shelf with 1/2" front lip. For non-transverse compartments that are 16" or greater in depth. Location: B1 mounted 9" below roll-up door drum, angles to be only as large as needed.	$238
3370-0127	Permanent shelf. Locate in R1 just above the Zico bottle racks. Front lip of shelf to be bent down.	$164
3370-0128	Permanent shelf. Locate in B1 just above the booster reel. Front lip of shelf to be bent down.	$164
3370-0129	Shelf 1/2 depth in transverse compartment. Rear lip to be 4" high. Locate in [#LOC].	$419
3370-0132	Bolt in shelf. Locate in roof top compartment driver's side, just above the air bottle, forward roof top compartment.	$164
3370-0133	Tracks shall be provided for use with adjustable shelves and/or trays. The tracks shall align for use of a shallow depth adjustable shelf(s) and/or adjustable tray(s). The tracks shall be ran from floor to ceiling to allow the shallow depth adjustable shelf/tray to have full compartment height adjustability. Position tracks within compartment for optimal adjustability. The tracks as installed from floor to ceiling may be impacted by other items located within the compartment; tracks may be cut and continued again as required to provide full height adjustability. The tracks shall be vertically mounted and attached to the side and/or rear walls of the compartments. Location: [#LOC].	$184
3370-0142	Permanent shelf for Hurst power unit. Locate on forward bulkhead high as possible [#LOC].	$660
3370-0144	Permanent shelf, bolt in, suspended from ceiling and forward in compartment. Locate in [#LOC].	$290
3370-0145	Adjustable shelf modification for shelf to have 1" lips. Location: B1 lower shelf.	$108
3370-0146	The interior shall include adjustable track extrusion horizontally on interior side walls, from the front wall of the body to the forward walls of the L2/R2 compartments. Locate (1) at 24" above the floor and the (1) at 42" above the floor.	$337
3370-0149	Adjustable shelf. For non-transverse compartments that are 16" or greater in depth. The shelf shall have a minimum 2" front, rear and side lips. Location: [#LOC].	$262
3370-0152	Fixed shelf with 1/2" front lip. For non-transverse compartments that are 16" or greater in depth. Location: L1 mounted 10" above floor full width of compartment.	$238
3370-0154	Adjustable shelf with 2" lips around entire shelf. For compartments that are shallow up to 15.99" depth. Location: [#LOC].	$225
3370-0157	Adjustable "C" style shelf. For non-transverse compartments that are 16" or greater in depth. Location: [#LOC].	$238
3370-0158	Tracks on rear wall of compartment for equipment mounting. Three (3) aluminum adjustable shelf tracks shall be vertical mounted on the rear wall of the L2 compartment over rear wheel. Tracks shall be located forward and rearward offset from compartment walls 4 inches in the compartment and one centered in the compartment. Tracks shall be for mounting customer equipement and shall not have any shelves included.	$153
3370-0161	Stainless steel adjustable shelf. For non-transverse compartments that are 16" or greater in depth. Location: [#LOC].	$285
3370-0162	Stainless steel adjustable shelf. For non-transverse compartments that are up to 15.99" deep. Location: [#LOC].	$146
3370-0163	Fixed shelf [#LOC] compartment. Locate just above compartment optioned reel, toolbox, storage box or similar floor mounted option.	$168
3370-0167	Mount two (2) pieces of shelf track horizontal from front to back on the back wall for attaching air bottle brackts to. Use old style adjustable track part # 273490. Locate [#LOC].	$215
3370-0168	Fixed shelf with 1" front lip. For non-transverse compartments that are 16" or greater in depth. Location: B1 mounted 28" above floor full width of compartment for booster reel.	$364
3370-0169	Permanent shelf. Locate in R8, 36" from the floor to the bottom of the shelf.	$96
3370-0171	Compartment R2 to have an "L" shaped shelf bolted to the ceiling and front wall to support the (8) air bottle storage.	$308
3370-0172	Adjustable shelf (J-Style) for non-transverse compartments 16 in. or greater in depth. Shelf to be partial depth and extend from back wall 18in. or as applicable per compartment depth, options. Design to offset attach to standard location adjustable tracks and relief notch as needed to adjust at breaker box or similar compartment mounted options.. Location: [#LOC].	$238
3370-0175	Fixed corner shelves with 1" front and side lip. For non-transverse compartments that are 16" or greater in depth. Location: L3 mounted (1) each side above floor tray for (1) gal fuel cans.	$264
3370-0177	Fixed hanging shelf without front lip. For non-transverse compartments that are 16" or greater in depth. 30" wide x 5" high x 24" deep. Includes nylon buckle strap assembly vertically across the center of the opening. Location: R3 mounted rearward at the ceiling of the full depth compartment area.	$238
3370-0178	Permanent shelf. Locate in L3, approximately 1/2 depth of compartment, even with bottom of lower 3x3 extrusion at turntable access panel on back wall.	$86
3370-0179	All adjustable and fixed shelves to be extended outboard towards door opening and inboard towards back wall as far as possible. Note outboard corners may require notching for compartment track lighting (if applicable).	$374

3370-0181	Fixed shelf with 1" front lip. For non-transverse compartments that are 16" or greater in depth. Location: L2 mounted above air bag module full width of compartment.	$238
3370-0182	Permanent shelf, bolt in and full transverse mounted, located above the upper transverse Speedlay assembly as low as the speedlay plumbing and tray will allow.	$290
3380-0014	Roll-out generator tray. Includes tray interlock. Locate [#LOC].	$772
3380-0015	Fixed back wall mounted toolboard. Toolboard to be spaced off wall a half inch. Location(s): [#LOC].	$214
3380-0017	Floor mounted slide master roll-out/tilt down tray. Single depth. Mount on [#LOC] floor.	$1,087
3380-0018	Adjustable roll-out toolboard. Includes upper and lower adjustable track with 250 lbs. slides and gas shock actuated. Toolboard sized to compartment height and depth as applicable. Location(s): [#LOC].	$798
3380-0019	Running board suction tray. Includes removable slats in bottom of tray. Location(s): [#LOC]	$508
3380-0021	Hard suction hose storage tray. Locate on inboard side of overhead ladder rack. Includes (2) securing straps.	$406
3380-0022	Floor mounted roll-out tray. Includes 500lbs. tray capacity. Location: [#LOC].	$846
3380-0023	Adjustable mounted roll-out/tilt-down tray. Location(s): [#LOC]. For use in single depth or rescue style compartments.	$1,373
3380-0024	Adjustable mounted roll-out tray. Includes 250 lbs tray capacity. Location(s): [#LOC]	$932
3380-0025	Adjustable mounted roll-out tray. Includes 500 lbs tray capacity. Location(s): [#LOC]	$1,131
3380-0027	Floor mounted SlideMaster with tray. Model SM3-SP. Single depth. Mount on [#LOC] floor.	$870
3380-0028	Adjustable mounted Slide Master with tray. Model SM3-SP. Single depth. Location(s): [#LOC]	$1,153
3380-0029	Floor mounted Bi-Directional Slide Master with tray. Model SM2-D-SP. Mounted on [#LOC].	$1,499
3380-0030	Adjustable mounted bi-directional Slide Master with tray. Model SM2-D-SP. Mounted in transverse area of [#LOC].	$1,781
3380-0033	Hard suction hose storage tray. Locate on top of Zico drop-down ladder rack.	$811
3380-0036	Fixed back wall mounted peg toolboard. Toolboard to be spaced off wall a half inch. Location(s): [#LOC].	$257
3380-0038	Floor mounted roll-out tray with Jonathan Slides. Includes 400lbs. tray capacity. Mount on [#LOC] floor.	$1,479
3380-0039	Adjustable mounted roll-out tray with Jonathan Slides. Includes 400 lbs tray capacity. Location(s): [#LOC]	$1,763
3380-0040	Vertical hinged swing-out tool board. Location: [#LOC]. Hinge along forward compartment wall and position centered between door and back wall. Includes butterfly latch to secure in the closed position that is accessible from the ground.	$1,500
3380-0041	PAC TRAC panels vertical stacked on back wall of compartment. Locate: [#LOC].	$775
3380-0043	Toolbox with slide out trays L1 offset forward. To include (4) individual trays mounted on slides. Reference photos and drawings in engineering file. Each tray to lock in and lock out. Include a 3/16" permanent shelf located directly above top of toolbox. Includes cover plate between tool box and forward compartment wall.	$2,747
3380-0044	Toolbox with slide out trays L3 offset forward (forward of partion). To include (7) individual trays mounted on slides. Reference photos and drawings in engineering file. Each tray to lock in and lock out. Include a 3/16" permanent shelf located directly above top of toolbox. Includes cover plate between tool box and forward compartment wall.	$4,562
3380-0045	Floor mounted Slide Master with tray. Model SM3-SP. 1/2 depth transverse or full depth on non transverse. Mount on [#LOC] floor.	$1,134
3380-0046	Adjustable mounted Slide Master with tray. Model SM3-SP. 1/2 depth in transverse compartments or full depth in upper B1. Mounted in transverse area or extended area of [#LOC].	$1,438
3380-0047	Floor mounted Slide Master with tray. Model SM3-SP. 2/3rds deep. Mount on [#LOC] floor.	$1,271
3380-0049	Running board suction tray (floating style). Includes tapered 3" front corner and removable slats in bottom of tray. Location(s): [#LOC].	$659
3380-0050	Floor mounted double stacked tray with 500# slides in B1.	$1,046
3380-0051	PAC TRAC panels on permanent shelf/floor of compartment. Locate: [#LOC].	$260
3380-0055	Floor mounted roll-out/tilt down tray with aluminum frame. Mount on [#LOC] floor.	$1,058
3380-0056	Adjustable mounted roll-out/tilt down tray with aluminum frame. Location(s): [#LOC]. For use in single depth or rescue style compartments.	$1,340
3380-0057	Adjustable mounted preconnect storage roll-out tray. Includes extended sides and front for storage of preconnected hose and 500 lbs slide capacity. Location(s): [#LOC]	$1,412
3380-0058	Floor mounted preconnect storage roll-out tray. Includes extended sides and front for storage of preconnected hose and 500 lbs slide capacity. Location(s): [#LOC]	$1,128
3380-0059	Running board suction tray. Outboard (front) wall of tray and rubrail hinged at the bottom with quick release latches for drop down door. Includes tapered 3" front corner and removable slats in bottom of tray. Location(s): [#LOC]	$821
3380-0060	Adjustable tool board with 500 lbs slides. Includes upper and lower adjustable track and gas shock actuated. Tool board sized to compartment height and depth as applicable. Location(s): [#LOC].	$1,097
3380-0061	Compartment underbody. Includes drop down front door with D-ring latches. Locate [#LOC].	$1,483
3380-0062	Adjustable peg tool board. Includes upper and lower adjustable track and gas shock actuated. Tool board sized to compartment height and depth as applicable. Location(s): [#LOC].	$959
3380-0063	Ready Respond Storage cabinet. Includes (5) drawers with gray fronts. No side trim required. Locate floor mounted in [#LOC].	$3,929
3380-0064	Floor mounted roll-out tray. Includes 250lbs. tray capacity. Mount on B1 floor. Front and rear lips of tray to be 9.5".	$1,811

3380-0065	Vertical hinged swing-out toolboard. Location: [#LOC]. Hinge along forward compartment wall and position centered between door and back wall. Includes D-Ring latch to secure in the closed position that is accessable from the ground.	$1,500
3380-0067	Poly box(s) to be located [#LOC]. Box(s) depth (front to rear) to be sized for placement on floor/shelf or tray as applicable to compartment options. Box sized [#COL]	$318
3380-0068	Floor mounted equally sized roll-out trays (PR). Includes 250lbs. tray capacity. Mount on [#LOC] floor.	$1,293
3380-0071	Tool board on dual direction 1000 lb. SlideMaster. Includes lock-in/lock-out. Tool board sized to compartment height and depth as applicable. Location(s): [#LOC].	$2,149
3380-0072	Running board suction tray. Includes removable slats in bottom of tray. Tray to be as long as possible. Location(s): [#LOC].	$1,014
3380-0073	Slidemaster frame powder coated silver. Location(s): [#LOC]	$110
3380-0074	Tool board HD adjustable. Includes upper and lower adjustable track and is gas shock actuated, return style re-enforcing bends on vertical front and rear edges of tool board, upper and lower adjustable track and gas shock actuated. Tool board sized to compartment height and depth as applicable. Location(s): [#LOC]	$853
3380-0075	Running board suction tray (floating style). Includes tapered 3" front corner and removable slats in bottom of tray. Tray to be as long as possible. Location(s): [#LOC].	$989
3380-0076	Tray, floor mounted roll-out with gas spring. 500 lbs. capacity. Location: [#LOC].	$649
3380-0077	Tray, adjustable roll-out with 500 lbs. capacity and a gas shock. Location(s): [#LOC].	$932
3380-0078	Compartment underbody with slide-out tray. Includes drop-down front door with push-button latch(es). [#LOC].	$1,836
3380-0079	Adjustable heavy duty tool board with 500 lbs. capacity. Includes return style reinforcing bends on vertical front and rear edges of tool board, upper and lower adjustable track and gas shock actuated. Tool board sized to compartment height and depth as applicable. Location(s): [#LOC].	$853
3380-0080	Adjustable heavy duty peg tool board. Includes return style re-enforcing bends on vertical front and rear edges of tool board, upper and lower adjustable track and gas shock actuated. Tool board sized to compartment height and depth as applicable. Location(s): [#LOC]	$1,013
3380-0081	Roll-out generator tray. Includes tray interlock. Locate [#LOC].	$772
3380-0082	Slidemaster frame powder coated black (EA). Location: [#LOC].	$149
3380-0084	Poly toolboards to be half inch thick. Toolboards to be spaced off wall a half inch. Location(s): L2 back wall and B1 upper side and back walls.	$815
3380-0085	Slide Master Tray in transverse. A slide master tray to be mounted in the transverse module. Tray to extended 70% either side. Top tray to hold four (4) removable speedlay trays (lower tray on slide master to have higher lips on sides and lower on sides for easier removal of trays). Each tray to have the following capacity: (1) 200' of 1.75", (1) 200' of 1.75", (1) 200' of 2.5" and last tray to hold 100' of 1.75", 100' of 1.75" and 100' of 2.5".	$3,102
3380-0086	Vertical hinged swing-out pegboard toolboard. Location: [#LOC]. Hinge along forward compartment wall and position centered front to rear. Includes D-ring latch to secure in the closed position that is accessible from the ground.	$1,590
3380-0087	Adjustable toolboard with 500 lb. slides for use with deep compartments. Includes upper and lower adjustable track with lock in/lock out latch. Toolboard sized to compartment height and depth as applicable. Location(s): [#LOC].	$1,097
3380-0089	Poly tray liners. Locate in the B1 floor mount, B1 adjustable mounted and R3 floor mounted trays. Liner to have hand holes.	$496
3380-0090	Aluminum tool box(es) to be 8" wide x 10" high x 25" deep. Location: L1 compartment floor.	$205
3380-0091	Floor mounted preconnect roll-out tray. Includes 500lbs. tray capacity with (3) 5" tall sides and rear (front to be 2" with area for hand-hold cut-out on each end). To hold up to 150' of 1.75" DJ and placed on top of black dri-deck. Tray to have rotary latching IPO shock(s). Location : [#LOC].	$955
3380-0093	Floor mounted roll-out/tilt down tray. Mount on [#LOC] floor. For use on half transverse trays.	$1,087
3380-0094	Floor mounted roll-out/tilt down tray. Mount on [#LOC] floor. For use on two thirds transverse trays or in the B1above the frame rails.	$1,087
3380-0095	Adjustable mounted roll-out/tilt down tray. Location(s): [#LOC]. For use on 1/2 depth transverse trays or upper deep B1 compartment.	$1,373
3380-0096	Adjustable mounted roll-out/tilt down tray. Location(s): [#LOC]. For use on 2/3 deep transverse trays or B1above the frame rails.	$1,373
3380-0097	Adjustable partition in running board suction tray. Partition to be adjustable from front to back and use old style adjustable track.	$215
3380-0098	Floor mounted Slide Master with tray. Model SMEX w/ 120% extension. 1/2 depth transverse or full depth on non transverse. Mount on [#LOC] floor.	$1,602
3380-0099	Vertical hinged swing-out toolboard. Location: [#LOC]. Hinge along rearward compartment wall and position centered between door and back wall. Includes D-Ring latch to secure in the closed position that is accessable from the ground and a positive hold open device in the open position.	$1,500
3380-0103	Running board suction tray (floating style). Includes tapered 3" front corner and Turtle Tile brand [#COL] floor matting in bottom of tray. Location(s): [#LOC]	$659
3380-0125	Running board suction tray. Outboard (front) wall of tray and rubrail hinged at the bottom with quick release latches for drop down door. Includes removable slats in bottom of tray. Location(s): [#LOC]	$821
3380-0129	Left side running board SS hose tray with Duradek flooring.	$526
3380-0130	Right side running board SS hose tray with Duradek flooring.	$526
3380-0133	On Scene Solutions floor mounted roll-out/tilt down tray mount on [#LOC] floor. This tray shall not exceed 30" in depth.	$1,474
3380-0134	On Scene Solutions adjustable mounted roll-out/tilt down tray mount in the [#LOC] compartment. This tray shall not exceed 30" in depth.	$1,751

3380-0139	Vertical hinged swing-out toolboard. Location: R2. Hinge along forward compartment wall and position centered between door and back wall. The hinge to be full height of toolboard (as applicable). Includes D-Ring latch to secure in the closed position that is accessable from the ground.	$1,575
3380-0140	Generator roll-out tray. Includes tray interlock. For use with Harrison compartment mounted generator. Locate in compartment [#LOC].	$523
3380-0142	PAC TRAC panels vertical stacked on compartment walls (includes installation on vertical hinged compt door, if applicable). Locate: [#LOC].	$2,501
3380-0143	Compartment underbody with slide-out tray. Includes front door with D-ring latch(es). Door will be attached to the tray. Locate [#LOC].	$2,119
3380-0146	Vertical hinged swing-out toolboard. Location: [#LOC]. Hinge along rearward compartment wall and position centered between door and back wall. Includes latch to secure in the closed position that is accessible from the ground.	$1,500
3380-0147	Poly toolboards to be half inch thick. Toolboards to be spaced off wall a half inch. Location(s): B1 side and back walls. Includes cut-out for compartment light(s). Toolboards to be approx (2) 30" high x 24" wide and (1) 30" high x 43" wide.	$893
3380-0148	Poly toolboards to be half inch thick. Toolboards to be spaced off wall a half inch. Location(s): L1 back wall, notch around generator gauge panel. Toolboard to be approx 37" high x 32" wide.	$299
3380-0149	Respond Ready toolbox located in the L1 compartment. Toolbox includes (4) drawers with 500 lb. lock-out slides and (4) dividers per drawer. Drawer heights to be (1) 3", (1) 4", (1) 8" and (1) 10" drawer. Includes standard top shelf, gray power coated front panels and galvanized components. Dimensions of overall toolbox 26" W x 27.5" H x 22.7" D.	$2,858
3380-0150	Fixed back wall mounted toolboard with swirled finish. Toolboard to be spaced off wall a half inch. Location(s): [#LOC].	$352
3380-0152	Vertical hinged swing-out toolboard, adjustable in and out. Location: L2. Hinge along rearward compartment wall and position centered between door and back wall. Includes latch to secure in the closed position that is accessible from the ground.	$1,500
3380-0155	Running board suction tray. Includes Turtle Tile brand black floor matting in bottom of tray. Location(s): [#LOC].	$508
3380-0158	Floor mounted roll-out tray. Includes OnScene Solutions slide 81900 series. 500 lbs. tray capacity. Location: [#LOC].	$1,913
3380-0159	Adjustable tool board with 500 lbs slides. Includes upper and lower adjustable track, .75" x .75" aluminum angle welded to front edge and gas shock actuated. Tool board sized to compartment height and depth as applicable. Location(s): [#LOC].	$853
3380-0162	Vertical hinged swing-out pegboard toolboard. Location: [#LOC]. Hinge along rearward compartment wall and position centered front to rear. Includes latch to secure in the closed position and gas shock to secure in the open position that is accessible from the ground.	$1,626
3380-0167	Vertical hinged heavy duty swing-out toolboard. Location: [#LOC]. Hinge along forward compartment wall and position centered between door and back wall. Includes D-Ring latch to secure in the closed position that is accessible from the ground. Hinge made from 1/2" stainless steel rod and stainless steel plate with flanged bearing top and bottom.	$1,575
3380-0168	Floor mounted roll-out tray with 500 lbs. capacity. Locate in R1 offset forward. Tray to be half the width of compartment.	$649
3380-0169	Adjustable roll-out tray with 500 lbs. capacity. Tray to have 6" lips. Location(s): [#LOC].	$1,199
3380-0173	Vertical hinged heavy duty swing-out pegboard toolboard. Location: [#LOC]. Hinge along forward compartment wall and position centered between door and back wall. Includes D-Ring latch to secure in the closed position that is accessable from the ground. Hinge made from 1/2" stainless steel rod and stainless steel plate with flanged bearing top and bottom.	$1,665
3380-0175	Floating style left side running board SS hose tray with Duradek flooring.	$629
3380-0176	Floating style right side running board SS hose tray with Duradek flooring.	$629
3380-0177	Prepare upper back walls of compartment L3 and L4 with studs for dealer to provide plywood (or whatever material) toolboard panels. Studs are to be threaded stainless steel.	$285
3380-0178	Vertical hinged swing-out toolboard. Location: R1, full height. Hinge along rearward compartment wall and position 5" in from door pan. Includes dual single point D-Ring latches to secure in the closed position that is accessible from the ground.	$1,500
3380-0179	Vertical hinged heavy duty swing-out aluminum tool board(s) shall be provided for compartment(s) [#LOC]. The tool board shall be constructed of 1/4" (.25") smooth aluminum plate, peg board style, and be sized in height and length as applicable. The tool board shall be position centered between door and back wall and hinged along rearward wall mounted. The hinge shall be made from 1/2" stainless steel rod and stainless steel plate with flanged bearing top and bottom that will permit the board to swing out of the compartment for easier access to tools and/or equipment. The tool board shall latch to a 3" x 3" extrusion, with a Tri-Mark latch to secure the toolboard in the closed position.	$2,033
3380-0180	(2) Hand hold slotted cut-outs shall be provided on rollout tray's front wall (one each side), for easier roll-out/roll-in. Rubber trim shall line the hand cut outs. Approximate size of cut-out to be 1-1/2" x 5". Locate on each tray in [#LOC].	$38
3380-0181	Vertical hinged swing-out toolboard. Located in [#LOC] 12" from door. Hinge along rearward compartment wall and position centered between door and back wall. Includes D-Ring latch to secure in the closed position that is accessable from the ground and a positive hold open device in the open position.	$1,500
3380-0182	Floor mounted slidemaster roll-out tray to hold (3) SCBA donning stations. Donning stations will be Zico spring clip brackets. Location [#LOC].	$1,713

3380-0187	Dual toolboards vertical hinged heavy duty swing-out toolboards. Location: [#LOC]. The inboard toolboard shall be hinged along rearward compartment wall and positioned 8" off inboard/back wall of the compartment. The outboard toolboard shall be hinged along forward compartment wall and positioned 8" outboard of other (inboard) tool board. Includes (1) D-Ring latch per toolboard to secure in the closed position that is accessible from the ground. Hinge made from 1/2" stainless steel rod and stainless steel plate with flanged bearing top and bottom.	$3,461
3380-0189	Running board suction tray with a diamond plate door hinged on the inboard side with quick release flush latch(s) and a lanyard type holding device. Includes removable slats in bottom of tray. Location(s): [#LOC].	$1,077
3380-0190	Vertical hinged swing-out tool board. Location: [#LOC]. Hinge along forward compartment wall and position halfway in from door opening. Includes single point D-ring latch to secure in the closed position that is accessible from the ground.	$1,500
3380-0191	Vertical hinged heavy duty swing-out toolboard. Location: [#LOC]. Hinge along rearward compartment wall and position centered between door and back wall. Includes D-Ring latch to secure in the closed position that is accessible from the ground. Hinge made from 1/2" stainless steel rod and stainless steel plate with flanged bearing top and bottom.	$1,575
3380-0193	Poly toolboards to be half inch thick. Toolboards to be spaced off interior/backwall a half inch. Location(s):[#LOC].	$815
3380-0194	PAC TRAC panels vertical stacked on each side of Swing-out Toolboard. Locate:[#LOC].	$1,548
3380-0195	Poly boxes (4) to be located [#LOC]. Box depth (front to rear) to be sized for placement on floor/shelf or tray as applicable to compartment options. All (4) boxes shall be 10" in height and equal width to fill the placement area designated.	$1,268
3380-0196	Vertical hinged heavy duty swing-out pegboard toolboard. Location: [#LOC]. Hinge along rearward compartment wall and includes D-Ring latch to secure in the closed position that is accessible from the ground. Hinge made from 1/2" stainless steel rod and stainless steel plate with flanged bearing top and bottom.	$1,650
3380-0197	Floor mounted roll-out/tilt down tray with aluminum frame. Mount on [#LOC] floor. Tray(s) to have 2" high sides all around IPO standard.	$1,058
3380-0198	Adjustable mounted roll-out/tilt down tray with aluminum frame. Location(s): [#LOC]. Tray(s) to have 2" high sides all around IPO standard. For use in single depth or rescue style compartments.	$1,340
3380-0199	Floor mounted bi-directional Slide Master with tray. Model SM2-D-SP. Includes fixed toolboard centered in tray lengthwise extending up as high as possible. Toolboard to be fabricated from 1.5" square aluminum tubing for frame and centered inside of frame shall be .250" smooth plate with bracing on each end for rigidity when tools are mounted. Tray/toolboard mounted on L1/R1 transverse floor.	$2,321
3380-0200	Running board suction tray (floating style). Includes tapered 3" front corner and removable slats in bottom of tray. Location(s): [#LOC]. Trays to be smooth plate painted black durabak.	$836
3380-0201	PAC TRAC panels vertical stacked on each side of swing-out tool board. Locate: [#LOC].	$1,548
3380-0203	Adjustable peg tool board. Includes upper and lower adjustable track and gas shock actuated. Tool board sized to compartment height and depth as applicable. Location(s): [#LOC].	$926
3380-0204	Floor mounted Slide Master with tray. Model SM3-LP (low profile). Single depth. Mount on [#LOC] floor.	$929
3380-0206	Adjustable peg tool board. Includes upper and lower adjustable track with lock in/lock out latch. Slides for use with deep compartments. Toolboard sized to compartment height and depth as applicable. Location(s): [#LOC].	$1,167
3380-0207	PAC TRAC panels vertically stacked on each side of (1) roll-out tool board in compt. [#LOC].	$775
3380-0208	Floor mounted rollout tray/toolboard, with gas spring and 500 lbs. capacity. The vertical toolboard will be mounted on adjustable mount(s) on the floor of the roll out tray. Includes return style reinforcing bends on vertical front and rear edges of tool board. Tool board sized to compartment height and depth as applicable. Location: [#LOC].	$1,287
3380-0209	Vertical hinged swing-out tool board. Location: L1 Hinge along rearward compartment wall and position halfway in from door opening. Includes single point D-ring latch to secure in the closed position that is accessible from the ground.	$1,054
3380-0211	Officer side running board suction tray shall have 1/2" drain holes IPOS.	$26
3380-0212	Floor mounted rollout tray/toolboard, with gas spring and 500 lbs. capacity. The vertical peg board tool board will be mounted on adjustable mount(s) on the floor of the roll out tray. Includes return style reinforcing bends on vertical front and rear edges of tool board. Tool board sized to compartment height and depth as applicable. Location: [#LOC].	$1,387
3380-0220	Floor mounted roll-out/tilt down and adjustable mounted roll-out/tilt down trays with aluminum frame. Trays to have 2" high sides all around IPO standard. Mount in [#LOC] compartment.	$2,398
3380-0222	Floor mounted roll-out inverted tray with 500 lbs. capacity. Location: [#LOC].	$649
3380-0223	Tool board HD adjustable. Includes return style re-enforcing bends on vertical front and rear edges of tool board, upper and lower adjustable track, 250LB slides and manual lock in/out latches at top. Tool board sized to compartment height and depth as applicable. Location(s): L3	$777
3380-0224	Floor mounted roll-out tray, with gas spring. 500 lbs. capacity. Tray shall be made of 1/4" smooth aluminum. Location: [#LOC].	$859
3380-0225	Floor mounted Slide Master with tray. Model SMEX w/ 120% extension. 2/3rds deep. Includes fixed toolboard centered in tray lengthwise extending up as high as possible. Toolboard to be fabricated from 1.5" square aluminum tubing for frame and centered inside of frame shall be .250" smooth plate with bracing on each end for rigidity when tools are mounted. Tray/toolboard mounted on [#LOC] floor.	$2,321

3380-0226	Poly toolboards to be half inch thick. Toolboards to be spaced off wall a half inch. Location(s): B1 side and back walls. Includes cut-out for compartment light(s). Toolboards to be approx (2) 30" high x 24" wide and (1) 30" high x 36" wide.	$893
3380-0228	Vertical hinged swing-out Pegboard tool board. Location: L2. Hinge along rearward compartment wall and position halfway in from door opening. Includes single point D-ring latch to secure in the closed position that is accessible from the ground.	$1,625
3380-0229	Adjustable toolboard partition. With unistrut track mounted to inside of rollout tray on floor for toolboard to adjust side to side. Toolboard to be fabricated from 1.5" square aluminum tubing for frame and centered inside of frame shall be .250" smooth plate with bracing on each end for rigidity when tools are mounted. Locate in [#LOC] floor mounted roll-out tray.	$503
3380-0230	Compartment underbody. Includes drop down front door with push-button latches. Locate: Span below R1 and R2.	$1,388
3380-0233	Adjustable roll-out tray with 500 lbs. capacity. Tray to have raised forward lip with hole(s) to accommodate mounting of captive rollers for optioned reels in compartment. Tray at full extension shall position rollers outward to provide additional protection from hoses chafing or damaging painted surfaces: [#LOC].	$1,266
3380-0236	Vertical hinged heavy duty swing-out toolboard with storage trough(s). Location: [#LOC]. Hinge along forward compartment wall and position centered between door and back wall. Includes D-Ring latch to secure in the closed position that is accessible from the ground. The Toolboard shall include a 5" x 5" Trough, enclosed on each end and running full length along the botom edge of the board, both inside and outside (for as long as available space allows when fully opened), used for small containers storage. Hinge made from 1/2" stainless steel rod and stainless steel plate with flanged bearing top and bottom.	$1,721
3380-0237	Compartment underbody 30" wide. Includes drop down front door with push-button latches. The storage compartment shall hold approximately 50` of 3" DJ hose. Locate [#LOC}.	$1,193
3380-0238	Pac Trac Vertical hinged swing-out toolboard, adjustable in and out. Location: [#LOC]. Hinge along forward compartment wall. Includes latch to secure in the closed position that is accessible from the ground.	$1,549
3380-0239	Adjustable roll-out tray with 500 lbs. capacity and a gas shock. PAC tool panel mounted on floor of tray. Location(s): L1	$1,246
3380-0240	Floor mounted stainless steel roll-out tray. Includes OnScene Solutions slide 81900 series. 500 lbs. tray capacity. Location: [#LOC].	$1,940
3380-0243	Adjustable roll-out tray. Includes 500lbs. tray capacity. Location: L3 compartment. The tray to be maximum of 20" deep x standard compartment width size. Use 20" long slides due to the enhanced extended compartmentation.	$932
3380-0246	Running board suction tray. Includes removable slats in bottom of tray. Tray inside dimensions to be 35" long from front to back x 10" from rub rail inward to pump panel x 9.5" total depth inside. Tray shall be equipped with a removable slat which will reduce the listed depth dimension. The outboard edge of the tray shall have no folded lip and shall bolt through rub rail to allow for max width. Location(s): [#LOC]	$555
3380-0247	Floor mounted roll-out tray, 48" wide sized for portable pump. Includes 500lbs tray capacity. Location: R1 offset forward.	$846
3380-0248	Vertical hinged swing-out tool board, adjustable in and out. Location: [#LOC]. Hinge along forward compartment wall. Includes single point D-ring latch to secure in the closed position that is accessible from the ground.	$1,550
3380-0249	Compartment underbody. Includes drop down front door with push-button latches. To hold approximately 25' of 5" LDH hose in each underbody compartment. Locate below L1/R1.	$1,193
3380-0250	Floor mounted Slide Master with tray. Notched. Model SM3-SP. 2/3rds deep. Notch rear forward corner to accommodate vertical exhaust to maximize utility. Finish to be sanded aluminum unless otherwise specified. Locate: L1 extended floor.	$1,442
3380-0251	Left side running board SS hose tray with Duradek flooring. Well to store 50' of 4" hose.	$526
3380-0252	Right side running board SS hose tray with Duradek flooring. Well to store 50' of 4" hose.	$526
3380-0253	Adjustable aluminum peg toolboard with SlideMaster SM3-MP 600 lb. slides for use with deep compartments. Includes upper and lower adjustable track with lock in/lock out latch. Toolboard sized to compartment height and depth as applicable. Location(s): R1	$1,246
3380-0254	Floating style right side running board SS hose tray with Duradek flooring. Well to be 34"L x 9"W x 11"D and offset rearward.	$650
3380-0255	Floating style left side running board SS hose tray with Duradek flooring. Well to be 34"L x 9"W x 11"D and offset rearward.	$650
3380-0256	Compartment with provision for 2 SCBA Bottle storage. Includes drop-down door with D-ring latch. Compartment to be located [#LOC].	$611
3380-0257	L4 shall contain (1) permanent divider cented in the compartment. Forward of divider shall include (1) floor mounted tray and (1) adjustable tray. Rearward of the divider shall include (2) adjustable heavy duty roll-out toolboards.	$4,486
3380-0258	R4 shall contain (1) permanent divider cented in the compartment. Forward of divider shall include (1) floor mounted tray and (1) adjustable tray. Rearward of the divider shall include (2) adjustable heavy duty roll-out toolboards.	$4,486
3380-0261	Roll-out generator tray. Includes tray interlock. Locate R3. 23 x 18 x 3 spaced from forward wall 8 inches.	$772
3380-0262	Vertical hinged heavy duty swing-out toolboard. Location: L2. Hinge along forward compartment wall and position so that face of toolboard will be 6" into compartment from back of closed door. Includes D-Ring latch to secure in the closed position that is accessible from the ground. Hinge made from 1/2	$1,575
3380-0264	PAC TRAC panels vertical stacked on forward and rearward side walls of compartment L2.	$521

3380-0265	Tray, floor mounted roll-out with gas spring. 500 lbs. capacity. The front and rear lips shall be 1.5" high. Location: [#LOC].	$649
3380-0266	Vertical hinged swing-out Pegboard tool board. Location: R2. Hinge along forward compartment wall and position halfway in from door opening. Includes single point D-ring latch to secure in the closed position that is accessible from the ground.	$1,625
3380-0267	Compartment underbody 66" wide with slide-out tray. Includes front door with D-ring latch(es). Door will be attached to the tray. Locate centerd below L1/L2.	$2,119
3380-0268	Tray / toolboard combination, floor mounted roll-out with gas spring. 500 lbs. capacity. The tray portion to be rearward. L1 rearward of CAFS unit.	$1,471
3380-0273	Fixed back wall mounted toolboard. Toolboard to be spaced off wall a half inch. Location(s): L1 lower on forward, rearward and back walls. Note toolboard fixed to back wall will be removable due to jack access.	$214
3380-0274	Vertical hinged heavy duty swing-out toolboard. Location: [#LOC]. Hinge along forward compartment wall and position centered between door and back wall. Includes D-Ring latch to secure in the closed position that is accessible from the ground and a ball type nylon catch with a ball socket rod to hold device in the open position. Hinge made from 1/2" stainless steel rod and stainless steel plate with flanged bearing top and bottom.	$1,610
3380-0275	Vertical hinged heavy duty swing-out toolboard. Location: [#LOC]. Hinge along forward compartment wall and position 8 in. in from door opening between door and back wall. Includes D-Ring latch to secure in the closed position that is accessible from the ground and a ball type nylon catch with a ball socket rod to hold device in the open position. Hinge made from 1/2" stainless steel rod and stainless steel plate with flanged bearing top and bottom.	$1,610
3380-0277	Running board suction tray extra capacity, drivers side. Includes removable slats in bottom of tray. Tray to be as long as possible, and 5" deeper than standard tray depth for extra hose capacity. Location shall be on drivers side pump panel running board. (Note): ground clearance below tray will be reduced to approximately 9" over level ground.	$1,202
3390-0001	Compartment [#LOC] to have the following storage package: (1) vertical partition 20" off forward wall and the following located forward of the partition: (1) floor mntd roll-out tray w/500lb slds and (2) adjustable shelves. Rearward of partition: (2) adjustable heavy duty tool boards.	$2,878
3390-0002	Compartment [#LOC] to have the following storage package: (1) vertical partition centered off forward wall and the following located forward of the partition: (1) floor mntd roll-out tray w/500lb slds and (2) adjustable shelves. Rearward of partition: (2) adjustable heavy duty tool boards.	$2,878
3390-0003	Compartment [#LOC] to have the following storage package: (1) vertical partition 20" off rearward wall and the following located forward of the partition: (1) floor mntd roll-out tray w/500lb slds and (2) adjustable shelves. Rearward of partition: (1) adjustable heavy duty toolboard.	$2,878
3390-0004	Compartment [#LOC] to have the following storage package: (1) vertical partition 20" off forward wall and the following located forward of the partition: (1) floor mntd roll-out tray w/250lb slds, (1) adjustable roll-out tray w/250lb slds and (1) adjustable shelf. Rearward of partition: (3) adjustable tool boards.	$4,317
3390-0005	Compartment [#LOC] to have the following storage package: (1) vertical partition centered off forward wall and the following located forward of the partition: (1) floor mntd roll-out tray w/250lb slds, (1) adjustable roll-out tray w/250lb slds and (1) adjustable shelf. Rearward of partition: (3) adjustable heavy duty tool boards.	$4,317
3390-0006	Compartment [#LOC] to have the following storage package: (1) vertical partition 20" off rearward wall and the following located forward of the partition: (1) floor mntd roll-out tray w/250lb slds, (1) adjustable roll-out tray w/250lb slds and (1) adjustable shelf. Rearward of partition: (1) adjustable tool board.	$2,728
3390-0007	Compartment [#LOC] to have the following storage package: (1) vertical partition 20" off forward wall and the following located forward of the partition: (1) permanent shelf centered, (1) floor mntd roll-out tray w/250lb slds and (2) adjustable shelves (above permanent shelf). Rearward of partition: (1) permanent shelf 18" off floor, (1) floor mntd roll-out tray w/250lb slds (below permanent shelf) and (2) adjustable tool boards (above the permanent shelf).	$3,590
3390-0008	Compartment [#LOC] to have the following storage package: (1) vertical partiton centered off forward wall and the following located forward of the partiton: (1) permanent shelf centered, (1) floor mntd roll-out tray w/250lb slds and (2) adjustable shelves. Rearward of partition: (1) permanent shelf 24" off floor, (1) floor mntd roll-out tray w/250lb slds (below permanent shelf) and (2) adjustable tool boards (above the permanent shelf).	$3,590
3390-0009	Compartment [#LOC] to have the following storage package: (1) vertical partition 20" off rearward wall and the following located forward of the partition: (1) permanent shelf centered, (1) floor mntd roll-out tray w/250lb slds and (2) adjustable shelves. Adjustable tracking to be provided above (as applicable) and below permanent shelf. Rearward of partition: (1) adjustable tool board.	$2,279
3390-0010	Compartment [#LOC] to have the following storage package: (1) vertical partition 20" off forward wall and the following located rearward of the partition: (1) permanent shelf 15" off floor, (1) floor mntd roll-out tray w/250lb slds (below permanent shelf) and (2) adjustable tool boards (above the permanent shelf).	$2,436
3390-0011	Compartment [#LOC] to have the following storage package: (1) vertical partition 20" off rearward wall and the following located forward of the partition: (1) permanent shelf 15" off floor, (1) floor mntd roll-out tray w/250lb slds (below permanent shelf) and (2) adjustable tool boards (above the permanent shelf).	$2,436

3390-0012	Compartment [#LOC] to have the following storage package: (2) vertical partions- (1) 18" off forward and (1) 18" off rearward wall and the following located forward of the forward partion: OPEN. Centered between partions: (1) permanent shelf 24" off floor, (1) floor mntd roll-out tray w/250lb slds (below permanent shelf) and (2) adjustable tool boards (above the permanent shelf). Rearward of the rear partion: OPEN.	$2,503
3390-0013	Poly divided hose storage 5 slot for hose up to 2.5" diameter. Location: [#LOC].	$795
3390-0016	Compartment L2/R2 to have the following: (1) vertical peg-board partition located 17" off forward wall, (1) SCBA Mounting Bracket fwd of partion, (1) peg board toolboard rwd of partion (spaced .5" off wall) and (1) adjustable shelf with adjustable tracking.	$2,028
3390-0017	Compartment L3 to have the following: (1) vertical peg board partition located 16.5" off rear wall (full height and depth as applicable), (1) peg board toolboard rwd of partion in the upper and lower area spaced off back wall .5", (1) peg board toolbard on rearward wall (full height and depth as applicable) spaced off rearward wall .5" and (2) adjustable shelves with adjustable tracking upper fwd area of partion. Includes access panel on rearward wall in lower section. Includes Dri-Dek brand Red floor matting covering the top of tool box.	$896
3390-0019	Compartment L1 to have the following: (1) vertical partion located next to the SCBA tubes, (3) vertically stacked SCBA storage tubes and (2) adjustable shelves with track (forward of the partion).	$986
3390-0020	Compartment L3 to have the following: (1) vertical partion located 16" off rear wall roll-up door track- NOT interior compartment wall (full height and depth as applicable), forward of partion: (1) adjustable shelf (upper) and (1) fixed shelf at offset.	$976
3390-0021	Compartment [#LOC] to have the following storage package: (1) vertical partition 20" off rearward wall and the following located forward of the partition: (1) floor mntd roll-out tray w/250lb slds and (1) adjustable shelf. Rearward of partition: (2) adjustable tool boards.	$2,646
3390-0022	Compartment R3 to have the following: (2) adjustable shelves upper area and (1) adjustable lower area shelf. All sheves to be notched into extended side compartment area.	$703
3390-0024	Compartment R2 to have the following: (1) vertical partition centered, (1) adjustable shelf with adjustable tracking forward of partition, (1) bolt-in floor with 2" raise rearward of partition for cribbing storage. Bolt-in floor is in addition to the existing DP floor.	$837
3390-0025	Compartment R1 to have the following: (1) vertical partition located 24" off rearward wall in lower section and (1) adjustable shelves with adjustable tracking rearward area of partition 24" off compartment floor.	$620
3390-0028	Compartment L1 to have the following storage package: (1) vertical partition 12" off forrward wall and the following located forward of the partition: (1) adjustable tool board. Rearward of partition: (1) floor mntd roll-out tray w/250lb slds, (1) adjustable roll-out tray w/250lb slds and (1) adjustable roll-out tilt down tray.	$3,917
3390-0029	Compartment L2 to have the following storage package: (1) vertical partition 12" off forrward wall and the following located forward of the partition: (4) adjustable shelves. Rearward of partition: (2) adjustable tool boards.	$2,706
3390-0030	Compartment L1 to have the following storage package. Upper compartment area to hold: (1) permanent shelf located just below the breaker box with (1) vertical partition located 14" off forward wall mounted to permanent shelf and (2) adjustable shelves with tracking rearward of partition. Lower compartment area to hold: (2) adjustable roll-out tray w/250lb slides.	$2,858
3390-0031	Compartment L3 to have the following storage package: (1) vertical partition 36" off forward wall and the following located forward of the partition: (1) floor mntd roll-out tray w/250lb slides and (2) adjustable shelves.	$1,966
3390-0032	Compartment R3 to have the following storage package: (1) vertical partition 36" off forward wall and the following located forward of the partition: (1) floor mntd roll-out tray w/250lb slides and (1) adjustable shelf.	$1,274
3390-0033	Compartment R3 to have the following: Forward area: (3) adjustable toolboards even spaced off forward wall, provide approx. 24" of adjustable track for toolboards. Rearward area: (1) floor mounted 250# roll-out tray to hold Speedy Dry Hopper. Tray to have notch on front wall for Speedy Dry Hopper valve to hold #100 pounds.	$3,108
3390-0034	Compartment L1 to have the following storage package: (1) vertical partiton centered off forward wall and the following located forward of the partiton: (2) adjustable shelves. Rearward of partition: (1) adjustable heavy duty tool board.	$1,657
3390-0035	Compartment L3 to have the following storage package: (1) vertical partition 20" off rearward wall and the following located forward of the partition: (1) fixed shelf at compartment offset, (1) floor mounted roll-out tray w/500lb slides and (1) adjustable shelf with tracks in the lower area.	$2,090
3390-0036	Compartment R3 to have the following storage package: (1) vertical partition 20" off rearward wall and the following located forward of the partition: (1) fixed shelf at compartment break.	$899
3390-0038	Compartment L1 to have the following storage package: (1) vertical partition 22" off forward wall and the following located forward of the partition: (3) adjustable shelves. Rearward of partition: (2) adjustable tool boards.	$2,685
3390-0039	Compartment L3 to have the following storage package: (1) vertical partition 20" off forward wall and the following located forward of the partition: (1) adjustable heavy duty toolboard. Rearward of partition: (2) adjustable shelves.	$1,657
3390-0041	Compartment R1 to have the following: (1) vertical partition located 24" off rearward wall and (1) adjustable shelf with adjustable tracking forward area of partition.	$620
3390-0042	Compartment L3 to have the following: (1) vertical partition located at begining of the enhanced extended area in L3 (full height and depth as applicable) and (1) adjustable shelf with adjustable tracking forward area of partion.	$620

3390-0043	Compartment R3 to have the following: (1) vertical partition located at begining of the enhanced extended area in R3 (full height and depth as applicable) and (1) adjustable shelf lower area with adjustable tracking and (1) floor mounted roll-out with 250lbs. slides forward area of partion.	$1,266
3390-0044	Compartment L1 to have the following storage package: (1) vertical partition centered off forward wall and the following located forward of the partition: (3) adjustable shelves. Rearward of partition: (3) adjustable shelves.	$1,960
3390-0045	Compartment L3 to have the following storage package: (1) vertical partition 24" off forward wall and the following located forward of the partition: (1) floor mntd roll-out tray w/250lb slds and (2) adjustable shelves. Rearward of partition: (2) adjustable tool boards.	$2,878
3390-0046	Compartment R3 to have the following: (1) permanent shelf located at compartment break with (1) vertical partition located 18" off forward wall mounted to bottom of permanent shelf and (1) floor mounted #250 roll-out tray rearward of partition.	$952
3390-0047	Compartment L3 to have the following storage package: (2) ajdustable shelves (fullwidth and notched to adjust around rear compartment wall).	$1,387
3390-0048	Compartment R1 to have the following storage package: (1) vertical partiton located 26" off rearward wall and the following located forward of the partiton: (3) adjustable shelves.	$1,669
3390-0049	Compartment L1 to have the following: (1) permanent shelf located at compartment break with (2) ajdustable toolboards mounted to bottom of permanent shelf and (1) fixed back wall mounted peg toolboard spaced off wall a half inch above fixed shelf.	$1,938
3390-0050	Bolt-in partition wall. Locate in officer side transverse module roll-out tray. Partition to run full length front to back, partition to be approx. 45" long. Partition to be offset approx 10" back from rearward side lip of roll out tray.	$639
3390-0051	Compartment [#LOC] to have the following storage package: (1) vertical partition 20" off forward wall and the following located forward of the partition: (2) adjustable shelves. Rearward of partition: (2) heavy duty adjustable tool boards.	$2,235
3390-0052	Compartment [#LOC] to have the following storage package: (1) vertical partition 24" off forward wall and the following located forward of the partition: (1) permanent shelf centered, (1) floor mntd roll-out tray w/250lb slds and (2) adjustable shelves (above permanent shelf). Rearward of partition: (1) permanent shelf 18" off floor, (1) floor mntd roll-out tray w/250lb slds (below permanent shelf) and (2) adjustable tool boards (above the permanent shelf).	$3,590
3390-0054	Compartment [#LOC] to have the following storage package: (1) vertical partition 20" off forward wall and the following located forward of the partition: (3) adjustable shelves. Rearward of partition: (2) adjustable heavy duty tool boards.	$2,690
3390-0055	Compartment [#LOC] to have the following storage package: (1) vertical partition 14" off rearward wall and the following located forward of the partition: (1) adjustable shelf with tracks, (1) floor mounted Slide Master with tray model SM3-SP slides and (1) adjustable roll-out tray w/250lb slides.	$2,422
3390-0059	Compartment [#LOC] to have the following storage package: (1) vertical partition 18" off rearward wall and the following located forward of the partition: (1) adjustable shelves.	$426
3390-0060	Compartment [#LOC] to have the following: (1) vertical partition located 10" off rearward wall (full height and depth as applicable). Forward of vertical partition: (1) fixed back wall mounted peg toolboard in the upper section and spaced off back wall .5" and (1) permanent shelf at offset.	$552
3390-0062	Compartment [#LOC] to have the following storage package: (1) vertical partition 20" off rearward wall and the following located forward of the partition: (2) adjustable heavy duty peg tool boards. Rearward of partition: (1) floor mntd roll-out tray w/500lb slds and (2) adjustable shelves.	$3,204
3390-0063	Compartment [#LOC] to have the following storage package: (1) vertical partition 20" off rearward wall and the following located forward of the partition: (2) adjustable peg tool boards. Rearward of partition: (3) adjustable shelves.	$2,794
3390-0067	Compartment [#LOC] to have the following storage package: (1) vertical partition centered off forward wall and the following located forward of the partition: (2) adjustable tool boards. Rearward of partition: (2) adjustable shelf.	$2,220
3390-0068	Compartment [#LOC] to have the following storage package: (1) vertical partition 20" off rearward wall and the following located forward of the partition: (1) adjustable shelf. Rearward of the partition: (1) floor mounted 500# roll-out tray to hold Speedy Dry Hopper. Tray to have notch on front wall for Speedy Dry Hopper valve. Hopper to hold #100 pounds.	$2,733
3390-0070	Compartment [#LOC] to have the following storage package: (1) vertical partition 20" off rearward wall and the following located forward of the partition: (1) floor mntd roll-out tray w/250lb slds and (3) adjustable shelves. Rearward of partition: (1) adjustable tool board.	$2,539
3390-0071	Compartment R3 to have the following storage package: (1) full width permanent shelf 20" off compartment floor with (1) vertical partition 22" off rearward wall below permanent shelf.	$442
3390-0073	Bolt-in Partion wall (front to rear and as high as possible). Locate centered in transverse compartment.	$551
3390-0074	Compartment [#LOC] to have the following storage package: (1) vertical partition 14" off rearward wall and the following located forward of the partition: (1) floor mntd roll-out tray w/250lb slds, (1) adjustable roll-out tray w/250lb slds and (1) adjustable shelf. Rearward of partition: (2) adjustable tool board.	$3,793
3390-0079	Compartment L1 to have the following: (1) permanent shelf located at compartment break with (1) vertical partition located 18" off rearward wall mounted to top of permanent shelf and the following located rearward of the partition: (2) adjustable shelves. Lower area to hold: (1) floor mntd roll-out tray w/250lb slds.	$1,240
3390-0080	Compartment L3 to have the following: (1) vertical partition located 14" from forward wall and (2) adjustable shelves with adjustable tracking forward of partition.	$866
3390-0081	The following located rearward of R1 vertical partition: backwall of compartment to have overlay of composite material full height and width with mounting brackets for a Little Giant Model 17.	$615

3390-0082	Compartment [#LOC] to have the following storage package: (1) vertical partiton centered off forward wall and the following located forward of the partiton: (2) adjustable shelves. Rearward of partition: (3) adjustable shelves, (1) floor mntd roll-out tray 500 lb capacity and (2) adjustable roll-out trays 500 lb capacity.	$4,259
3390-0083	Compartment [#LOC] to have the following storage package: (1) vertical partition centered off forward wall and the following located forward of the partition: (1) floor mntd roll-out tray 500 lb capacity, (1) adjustable roll-out tray 500 lb capacity and (2) adjustable shelves. Rearward of partition: (2) adjustable tool boards.	$4,033
3390-0084	Compartment [#LOC] to have the following storage package: (1) vertical partition 18" off rearward wall and the following located forward of the partition: (1) floor mntd roll-out tray w/250lb slds and (2) adjustable shelves.	$1,512
3390-0086	Compartment [#LOC] to have the following storage package: (1) vertical partition 30" off forward wall and the following located forward of the partition: (1) floor mntd roll-out tray w/250lb slds, (1) adjustable roll-out/tilt down tray w/250lb slds and (1) adjustable shelf. Rearward of partition: (1) adjustable tool boards.	$3,440
3390-0088	Compartment [#LOC] to have the following storage package: (1) vertical partition 30" off forward wall and the following located forward of the partition: (1) adjustable toolboard. Rearward of partition: (3) adjustable shelves.	$1,805
3390-0089	Compartment [#LOC] to have the following storage package: (1) vertical partition 22" off forward wall and the following located rearward of the partition: (1) adjustable shelf.	$541
3390-0090	Compartment [#LOC] to have the following storage package: (1) vertical partition 14" off rearward wall and the following located forward of the partition: (1) adjustable shelf. Rearward of partition: (1) adjustable toolboard.	$1,337
3390-0091	Compartment [#LOC] to have the following storage package in the lower full depth area: (1) vertical partition centered off forward wall and the following located forward of the partition: (1) adjustable shelf.	$541
3390-0092	Compartment [#LOC] to have the following storage package: (1) vertical partition 18" off driver side wall and the following located to the officer side of the partition: (2) adjustable shelves.	$776
3390-0093	Compartment [#LOC] to have the following storage package: (1) vertical partition 20" off forward wall and the following located forward of the partition: (2) adjustable shelves. Rearward of partition: (2) adjustable peg tool boards.	$2,534
3390-0095	Compartment [#LOC] to have the following storage package: (1) vertical partition 24" off forward wall and the following located forward of the partition: (1) floor mntd roll-out tray w/250lb slds and (2) adjustable shelves. Rearward of partition: (1) adjustable tool board.	$2,312
3390-0096	Compartment [#LOC] to have the following storage package: (1) vertical partition 14" off rearward wall and the following located forward of the partition: (1) floor mntd roll-out tray w/500lb slides, (1) adjustable roll-out tray w/500lb slides and (1) adjustable shelf with tracks.	$2,605
3390-0097	Compartment [#LOC] to have the following storage package: (2) adjustable roll-out tray w/500lb slides, (1) adjustable shelf with tracks and (1) SCBA/Fire Extinguisher storage rack floor mounted to hold (4) bottles to be stored angled downward in the compartment. The bottom and sides are to include composite material. Each storage slot to be 10" wide x 10" high.	$4,613
3390-0098	Compartment [#LOC] to have the following storage package: (1) air bag storage rack offset rearward and the following located forward of the storage rack: (1) adjustable shelf with tracks and (1) poly box floor mounted. The air bag storage rack to have (6) slots, each slot to be 2"W x 21"H x 24"D. The poly box to be 15"W x 10"H x 24"D..	$2,057
3390-0099	Compartment [#LOC] to have the following storage package: (1) floor mntd roll-out tray w/500lb slides, (1) adjustable roll-out tray w/500lb slides and (2) adjustable shelf with tracks. Floor mounted roll-out tray to have 10" high side walls.	$3,678
3390-0100	Compartment [#LOC] to have the following storage package: (1) vertical partition 12" off rearward wall and the following located forward of the partition: (3) adjustable shelves - (2) shevles located above breaker box and (1) shelf located below. Rearward of partition: (1) adjustable tool board.	$1,894
3390-0101	Compartment [#LOC] to have the following storage package: (1) permanent shelf mounted 18" above compartment floor. Above the permanent shelf: (1) vertical partition located 15" off rearward wall and (1) adjustable toolboard rearward of the vertical partition.	$1,211
3390-0102	Compartment [#LOC] to have the following storage package: (1) vertical pegboard partition 14" off rear wall and the following located forward of the partition: in upper area (2) adjustable shelf and (1) permanent shelf at offset (above extrusion if applicable).	$706
3390-0103	Compartment [#LOC] to have the following storage package in upper area: (2) adjustable shelf. In lower area: (2) adjustable toolboards in forward area, (1) #500 floor mounted roll-out tray in rearward 30" and (1) permanent shelf at offset below extrusion.	$2,818
3390-0109	Compartment [#LOC] to have the following storage package: (1) vertical partition 17" off rearward wall and the following located forward of the partition: (1) floor mntd roll-out tray w/250lb slds and (2) adjustable shelves. Rearward of partition: (1) adjustable tool board.	$2,312
3390-0112	LT/RT storage (upper area of transverse) for customer supplied air bags and plywood storage. Includes a partition located 14" off forward wall, remaining space between partiition and speedlay area for air bag storage.	$1,562
3390-0113	L2 storage for customer supplied air bags and plywood storage. Air bag storage for 8 bags. Appox slot sizes: (1) 4" wide x 6" high x 6" deep, (1) 4" wide x 6" high x 12" deep, (1) 4" wide x 10" high x 10" deep, (1) 4" wide x 15" high x 15" deep, (1) 4" wide x 15" high x 21" deep, (1) 4" wide x 20" high x 20" deep, (1) 4" wide x 24" high x 24" deep and (1) 4" wide x 42" high x 15" deep. Area above to have one vertical partition 24" off foward wall located on fixed shelf above the air bag storage.	$3,083

3390-0114	Compartment [#LOC] to have the following storage package in the lower full depth area: (1) vertical partition located at compartment offset and the following located forward of the partition: (1) floor mntd roll-out tray w/500lb slds and (1) adjustable shelf.	$1,387
3390-0115	Compartment [#LOC] to have the following storage package: (1) Fixed back wall mounted peg toolboard spaced off wall a half inch and (1) adjustable shelf attached to the toolboard..	$635
3390-0116	Compartment [#LOC] to have the following storage package: (1) vertical partition 20" off rearward wall and the following located forward of the partition: (3) adjustable shelves. Rearward of partition: (1) adjustable tool board.	$1,902
3390-0117	Compartment [#LOC] to have the following storage package in full depth lower area: (1) vertical partition 46" off rearward wall and the following located rearward of the partition: (1) adjustable mounted roll-out tray w/500lb slides	$1,381
3390-0120	Compartment [#LOC] to have the following storage package in the lower full depth area: (1) vertical partition located at compartment offset and the following located forward of the partition: (1) floor mntd roll-out tray w/500lb slds and (1) adjustable roll-out tray w/250lb slds.	$2,080
3390-0121	L2 storage for customer supplied air bags and plywood storage. Air bag storage for 9 bags in 5 storage slots. Appox slot sizes: (1) 4" high x 16" wide x 16" deep for 2 air bags, (1) 4" high x 16" wide x 22" deep for 2 air bags, (1) 4" high x 21" wide x 21" deep for 2 air bags, (1) 4" high x 25" wide x 25" deep for 2 air bags and (1) 4" high x 43" wide x 16" deep for 1 air bag. Includes a fixed shelf above the air bag storage.	$3,083
3390-0122	Compartment LT/RT to have the following storage package: (1) vertical partition 21.5" off forward wall and the following located forward of the partition: (1) vertical partition 10" from the rear partition and 27" high and mounted to a full width fixed shelf.	$1,074
3390-0123	Bolt-in partition wall. Locate 26" back from inside of extrusion of [#LOC] door opening. Partition will run from the front of truck to rear of truck dividing officerside from drivers side of transverse area.	$321
3390-0124	Compartment [#LOC] to have the following storage package: (1) floor mounted 500# roll-out tray to hold Speedy Dry Hopper. Tray to have notch on front wall for Speedy Dry Hopper valve to hold #50 pounds.	$1,810
3390-0127	Compartment [#LOC] to have the following storage package: (1) vertical partition 24" off forward wall and the following located rearward of the partition: (1) adjustable shelf.	$541
3390-0132	Compartment [#LOC] to have the following storage package: (1) vertical pegboard partition 20" off forward wall and the following located forward of the partition: (1) floor mntd roll-out tray w/500lb slds, (1) adjustable tilt-down roll-out tray and (1) adjustable shelf. Rearward of partition: (1) adjustable pegboard tool board.	$3,658
3390-0136	Compartment R1 to have the following storage package in lower area: (1) vertical partition 14" off forward wall and the following located forward of the partition: (1) fixed shelf 20" off the floor, shelf to be 20" deep off rear wall.	$308
3390-0139	Compartment R1 to have the following storage package: (1) vertical partition located against hydraulic ladder rack cover and the following located rearward of the partition: (1) floor mntd roll-out tray w/500lb slds, (1) adjustable roll-out tray w/500lb slds and (2) adjustable shelves.	$2,444
3390-0140	Compartment R3 to have the following storage package: (1) vertical partition 20" off rearward wall and the following located forward of the partition: (1) floor mounted roll-out tray and (2) adjustable shelves. Rearward of the partition: (1) floor mounted roll-out tray to hold Speedy Dry Hopper. Tray to have notch on front wall for Speedy Dry Hopper valve. Hopper to hold #100 pounds.	$3,710
3390-0141	Compartment L1 to have the following storage package: (1) fixed shelf 20" off compartment floor and (1) vertical partition 18" off forward wall above the fixed shelf and the following located rearward of the partition: (2) adjustable shelves. (1) permanent shelf at compartment offset.	$1,059
3390-0142	Compartment L3 to have the following storage package: (1) vertical partition 12" off rearward wall and the following located forward of the partition: (3) adjustable shelves. (1) permanent shelf at compartment offset.	$1,199
3390-0143	Compartment [#LOC] to have the following storage package: (1) vertical partition 12" off forward wall and the following located rearward of partition: (1) floor mntd roll-out tray, (1) adjustable shelf and (1) adjustable roll-out/tilt down tray.	$2,412
3390-0144	Compartment L1 to have the following storage package: (1) vertical partition 13" off forward wall and the following located forward of the partition: (1) fixed shelf, 20" deep off back wall and 20" off compartment floor. Rearward of partition: (2) adjustable toolboards.	$2,012
3390-0145	Compartment L3 to have the following storage package: (1) vertical partition 14" off rearward wall and the following located forward of the partition: (1) floor mntd roll-out tray w/500lb slides and (2) adjustable shelves with tracks.	$1,514
3390-0151	Compartment [#LOC] to have the following storage package: (1) vertical partition 13" off forward wall and the following located rearward of the partition: (1) adjustable shelf.	$634
3390-0152	Compartment [#LOC] lower area to have the following storage package: (1) vertical partition 13" off forward wall and the following located rearward of the partition: (1) adjustable shelf. (1) permanent shelf at compartment offset.	$728
3390-0153	Compartment rollers for Poly Roll and Smoke Tube located in R2. Includes slotted wall brackets attached to side compartment walls and handrail extrusion as the roller. (2) roller assemblies mounted as high as possible in the compartment - (1) smoke tube roll mounted forward and (1) poly roll mounted rearward.	$526
3390-0154	Compartment L1 to have the following storage package: (1) floor mntd roll-out tray w/500lb slds, tray to have approx 14" wide interior. Rearward of floor mounted tray: (2) adjustable heavy duty peg tool boards. Upper forward area of compartment to have fixed back wall mounted peg toolboard to be spaced off wall a half inch. Fixed back wall toolboards to be approx. 18" wide, bottom of toolboards to be approx 20" from floor and extended onto area above the compartment break.	$3,444

3390-0155	Compartment L3 to have the following storage package: (1) vertical partition 24" off forward wall and the following located forward of the partition: (1) floor mntd roll-out tray w/500lb slds, (4) 17" high x 8" aluminum tubes to hold fire extinguishers inside floor mounted tray and (2) adjustable roll-out/tilt down trays. Rearward of partition: (2) adjustable heavy duty peg tool boards.	$4,943
3390-0156	Compartment R1 to have the following storage package: (1) vertical partition 14" off forward wall and the following located forward of the partition: (1) fixed shelf with inverted lip approx. 24" above floor and (1)adjustable heavy duty peg tool board mounted on top of the fixed shelf. Rearward of partition: (1) floor mntd roll-out tray w/500lb slds and (1) adjustable roll-out/tilt down tray.	$3,518
3390-0157	Compartment [#LOC] to have the following storage package in the lower full depth area: (1) vertical partition 25" off rearward wall and the following located forward of the partition: (1) adjustable shelf and (1) floor mounted 500# roll-out tray.	$1,067
3390-0160	Compartment [#LOC] to have the following storage package: (1) vertical partition 24" off rearward wall and the following located forward of the partition: (1) adjustable tool board. Rearward of partition: (1) floor mntd roll-out tray w/500lb slds and (2) adjustable shelves.	$2,366
3390-0161	Compartment [#LOC] to have the following storage package: (1) vertical partition 16" off rearward wall and the following located forward of the partition: (1) adjustable heavy duty tool board. Rearward of partition: (1) floor mntd roll-out tray w/500lb slides and (3) adjustable shelves with tracks.	$2,601
3390-0162	Compartment R1 to have the following storage package: (1) vertical partition located against hydraulic ladder rack cover and the following located rearward of the partition: (1) floor mntd roll-out tray w/500lb slides and (2) adjustable shelves.	$1,316
3390-0171	Compartment L1 to have the following storage package: Rearward of DEF tank cover (1) adjustable heavy duty peg tool board. Rearward of adjustable toolboard: (1) floor mntd roll-out tray w/500lb slds, tray to have approx 14" wide interior. The backwall and rearward walls of compartment to have fixed wall mounted peg toolboard to be spaced off wall a half inch. Fixed wall toolboards to be full width, full depth and bottom of toolboards to be approx 20" from floor and extended onto area above the compartment break.	$2,679
3390-0172	Compartment L3 to have the following storage package: (1) vertical partition 24" off forward wall and the following located forward of the partition: (1) On Scene Solutions floor mntd roll-out/tilt down tray, (4) 17" high x 8" aluminum tubes to hold fire extinguishers inside floor mounted tray and (2) On Scene Solutions adjustable roll-out/tilt down trays. Rearward of partition: (2) adjustable heavy duty peg tool boards.	$7,802
3390-0173	Compartment R1 to have the following storage package: (1) vertical partition approximately 17" off forward wall and the following located forward of the partition: (2) adjustable heavy duty peg tool boards mounted. Rearward of partition: (1) floor mntd roll-out tray w/500lb slds and (1) On Scene Solutions adjustable roll-out/tilt down tray.	$4,817
3390-0176	Compartment L3 to have the following storage package: (1) vertical partition 14" off rearward wall and the following located forward of the partition: (1) floor mntd roll-out tray w/500lb slds and (1) adjustable roll-out/tilt-down tray.	$2,413
3390-0177	Compartment R3 to have the following storage package: (1) vertical partition 20" off rearward wall and the following located forward of the partition: (1) floor mntd roll-out tray w/500lb slds, (1) adjustable roll-out tray w/500lb slds and (1) adjustable roll-out/tilt-down tray. Rearward of partition: (1) heavy duty adjustable tool boards.	$4,193
3390-0178	Compartment L1 to have the following storage package: (1) floor mounted roll-out tray w/500lb slides, (2) fixed shelves - (1) at the compartment offset (lip up) and (1) 14" above the floor of the roll-out tray (lip down). Between the fixed shelves: (2) adjustable heavy duty tool boards.	$2,749
3390-0179	Compartment L3 to have the following storage package: (1) floor mounted roll-out tray w/500lb slides, (2) fixed shelves - (1) at the compartment offset and (1) just below the electric cord reel. Between the fixed shelves: (1) vertical partition centered off forward wall.	$1,048
3390-0186	Compartment L3 upper to have the following storage package: (1) vertical partition centered off forward wall and the following located rearward of partition: (2) adjustable shelves.	$870
3390-0188	Compartment [#LOC] to have the following storage package: (1) vertical partition forward of ladder rack hydraulic cyclinder cover and the following located forward of the partition: (1) floor mounted 500# roll-out tray, (1) adjustable roll-out/tilt down tray and (1) adjustable shelf.	$2,364
3390-0189	Compartment L3 to have the following storage package: (1) vertical partition 24" off forward wall and the following located forward of the partition: (2) adjustable heavy duty tool boards.	$1,916
3390-0190	Compartment L1 to have the following storage package: (1) vertical partition centered off forward wall and the following located forward of the partition: (1) floor mounted roll-out tray w/500lb slides and (2) adjustable shelves. Rearward of partition: (2) heavy duty adjustable peg tool boards.	$3,538
3390-0192	Compartment L3 to have the following storage package: (1) vertical partition 16" off forward wall and the following located forward of the partition: (1) adjustable heavy duty tool board. Rearward of partition: (2) adjustable aluminum roll-out tilt-down trays.	$3,925
3390-0196	Compartment [#LOC] to have the following storage package: (1) vertical partiton 20" off forward wall and the following located forward of the partiton: (2) adjustable shelves. Rearward of partition: (1) adjustable heavy duty tool board.	$1,657
3390-0197	Compartment L1 to have the following storage package: (1) vertical partition 20" off forward wall and the following located forward of the partition: (1) adjustable heavy duty tool board. Rearward of partition: (1) floor mntd roll-out tray w/500lb slds and (2) adjustable shelves.	$2,878
3390-0198	Compartment B1 to have the following storage package: (1) adjustable shelf with lips down. Mounted on the shelf: (4) Zico Bottle rack for large bottles stacked (1) high x (4) wide. Each unit will have straps to hold the bottle in, an angled floor to hold bottle in place, and all top units will have a flat top. Each unit will be bolted together and be Black PVC coated.	$941

3390-0199	Compartment L3 to have the following storage package: (1) permanent shelf at compartment offset with the following below: (1) vertical pegboard partition 28" off forward wall and the following located forward of the partition: (1) floor mounted roll-out tray w/500lb slides, (1) adjustable tilt-down roll-out tray and (1) adjustable shelf. Rearward of partition: (1) adjustable heavy duty pegboard tool board.	$3,752
3390-0200	Compartment L2 to have the following storage package: (2) vertical hinged swing-out toolboards. Location: (1) 5" off back wall and (1) 12" off back wall. Back toolboard to hinge along forward compartment wall, front toolboard to hinge along rearward compartment wall. Includes D-Ring latch to secure in the closed position that is accessable from the ground.	$2,998
3390-0201	Compartment L3 to have the following storage package: (1) vertical partition 14" off rearward wall and the following located forward of the partition: (2) adjustable shelves, (1) in the lower section and (1) in the upper section. Rearward of partition: (1) adjustable shelf in the lower section.	$1,264
3390-0206	Compartment R3 to have the following storage package: (1) vertical partition 18" off rearward wall and the following located forward of the partition: (2) adjustable heavy duty tool boards. Rearward of partition: (2) adjustable shelves.	$2,571
3390-0207	Compartment L3 to have the following storage package: (1) vertical partition 20" off rearward wall and the following located forward of the partition: (2) adjustable shelves. Rearward of partition: (1) heavy duty adjustable tool board.	$1,719
3390-0210	Bolt-in partition wall. Locate in compartment R1 offset 15" off rearward wall.	$215
3390-0211	Compartment L3 to have the following storage package: (1) vertical partition centered off forward wall and the following located rearward of the partition: (2) heavy duty adjustable tool boards.	$1,916
3390-0217	Compartment [#LOC] to have the following storage package: (1) vertical partition 27" off rearward wall and the following located forward of the partition: (1) floor mntd roll-out tray w/500lb slds and (1) adjustable shelf. Rearward of partition: (1) adjustable heavy duty toolboard.	$2,131
3390-0220	Compartment L3 to have the following storage package: (1) vertical partition 20" off forward wall and the following located forward of the partition: (1) floor mounted roll-out tray w/500lb slides and (2) adjustable roll-out trays w/500lb slides. Rearward of partition: (2) adjustable heavy duty tool boards.	$4,603
3390-0225	Compartment L1 to have the following storage package: (1) vertical partition 12" off rearward wall and the following located forward of the partition: (1) floor mntd roll-out tray w/500lb slds and (2) adjustable shelves.	$1,514
3390-0229	Compartment R3 to have the following storage package: (1) vertical partition approximately 15" off forward wall and the following located forward of the partition: (3) adjustable shelves. Rearward of partition: (2) heavy duty adjustable peg tool boards.	$3,126
3390-0230	Compartment L2 to have the following storage package: Lower area to have (1) vertical partition 14" off rearward wall and the following located forward of the partition: (8) Zico Bottle rack, model PAC-SR-B for large bottles (4 wide x 2 high). Each unit will have straps to hold the bottle in and all top units will have a flat top. Each unit will be bolted together. (2) Air bag racks (side by side), (1) 6" high x 20" wide x 20" deep and (1) 6" high x 11" wide x 11" high. Rearward of partition: (2) adjustable shelves. Upper area to have (2) Air bag racks offset forward (side by side), (1) 6" high x 32" wide x 30" deep and (1) 6" high x 28" wide x 28" deep.	$3,141
3390-0231	Compartment L1 to have the following storage package: (1) permanent mounted shelf 17" off the floor with inverted front lip, (1) vertical partition centered off rearward wall and the following located forward of the partition: (1) adjustable heavy duty tool board. Rearward of partition: (2) adjustable shelves.	$1,886
3390-0232	Compartment L3 to have the following storage package: (1) adjustable vertical partition and the following located forward of the partition: (2) adjustable heavy duty tool boards.	$2,122
3390-0233	Compartment R2 to have the following storage package: Lower area to have (1) vertical partition 14" off rearward wall and the following located forward of the partition: (8) Zico Bottle rack model PAC-SR-B for large bottles (4 wide x 2 high). Each unit will have straps to hold the bottle in and all top units will have a flat top. Each unit will be bolted together. Rearward of partition: (2) adjustable shelves.	$2,642
3390-0234	Compartment [#LOC] to have the following storage package: (1) vertical partition 20" off rearward wall and the following located forward of the partition: (2) adjustable shelves. Rearward of partition: (1) adjustable heavy duty toolboard.	$2,233
3390-0235	Compartment L1 rearward of the pump panel to have the following storage package: (1) vertical partition 12" off forward wall and the following located forward of the partition: (1) adjustable heavy duty tool board. Rearward of partition: (2) adjustable shelves.	$1,694
3390-0236	Compartment L1 to have the following storage package: (1) vertical partition 18" off forward wall and the following located forward of the partition: (1) 2"x2" angle floor mounted to outside edge and (1) permanent shelf just below breaker box. Rearward of partition: (2) adjustable heavy duty tool boards.	$2,114
3390-0237	Compartment R2 to have the following storage package: (1) roll-out aluminum tilt-down tray mounted on top of air bag storage rack and storage rack for (5) air bags (bottom storage full width and (4) equally spaced above). All air bag slots will be 2" high.	$2,608
3390-0238	Compartment R1 to have the following storage package: (1) vertical partition 40" off forward wall and the following located forward of the partition: (1) floor mounted roll-out tray with 500lb slides and (3) adjustable shelves. Rearward of partition: (2) adjustable heavy duty tool board, tool boards to be held down 10" for clearance of air reel rollers.	$3,385
3390-0239	Compartment R3 to have the following storage package: (1) fixed shelf located 26" above the floor and (1) vertical partition 28" off forward wall below the fixed shelf. The following located forward of the partition: (1) floor mounted roll-out tray with 500lb slides and (1) adjustable roll-out tray with 500lb slides. Rearward of partition: (1) adjustable shelf. (1) adjustable roll-out aluminum tilt-down tray located above the fixed shelf.	$4,066

3390-0240	Compartment B1 to have the following storage package: (1) adjustable roll-out tray with 500lb slides with 6" lips. Tray to be held back an additional 4" from door opening to allow for hose deployment. (2) rollers assemblies mounted to front lip of tray for electric cord reels.	$1,755
3390-0241	Compartment L1 to have the following storage package: (1) vertical partition centered off forward wall and the following located forward of the partition: (2) adjustable shelves. Rearward of partition: (1) floor mntd roll-out tray w/500lb slds, (1) adjustable shelf and (1) adjustable mounted roll-out/tilt-down tray.	$4,260
3390-0242	Compartment L3 lower section to have the following storage package: (1) vertical partition 20" off forward wall and the following located forward of the partition: (1) adjustable heavy duty peg board tool board. Rearward of partition: (1) floor mntd roll-out tray w/500lb slds.	$1,711
3390-0243	Compartment R3 to have the following storage package: (1) vertical partition 24" off forward wall and the following located forward of the partition: (2) adjustable shelves. Rearward of partition: (1) adjustable heavy duty peg board tool board.	$1,719
3390-0244	Compartment R1 to have the following storage package: (1) vertical partition 24" off rearward wall and the following located forward of the partition: (1) floor mntd roll-out tray w/500lb slds, (1) adjustable roll-out tray w/500lb slds and (1) fixed shelf just below the hydraulic reels. Rearward of partition: (2) adjustable shelves.	$2,605
3390-0248	Compartment R1 lower area to have the following storage package: (1) vertical partition 13" off forward wall and the following located rearward of the partition: (1) adjustable shelf.	$634
3390-0250	Compartment R1 to have the following storage package: (1) vertical partition 40" off rearward wall and the following located rearward of the partition: (1) floor mounted roll-out tray with 500lb slides and (3) adjustable shelves. Forward of partition: (2) adjustable heavy duty tool boards.	$3,385
3390-0251	Compartment R1 to have the following storage package: In the lower section: (1) floor mntd roll-out tray w/500lb slds and (3) adjustable mntd roll-out tray w/500lb slds, all trays to have 4" lips. In the upper section: (2) adjustable shelves.	$4,283
3390-0252	Compartment [#LOC] to have the following storage package: (1) vertical partition 20" off forward wall and the following located rearward of the partition: (1) floor mntd roll-out tray w/500lb slds and (2) adjustable shelves. Forward of partition: (1) adjustable heavy duty toolboard.	$2,878
3390-0253	Compartment R3 to have the following storage package: (1) vertical partition 24" off forward wall and the following located forward of the partition: (2) adjustable shelves. Rearward of partition: (2) adjustable heavy duty peg board tool boards.	$2,572
3390-0255	Compartment B1 to have the following storage package: (1) vertical partition centered off driver side wall and the following located to driver side of the partition: (6) Zico Bottle rack for large bottles stacked (3) high x (2) wide. Each unit will have straps to hold the bottle in, an angled floor to hold bottle in place, and all top units will have a flat top. Each unit will be bolted together and be Black PVC coated. The following located to officer side of the partition: (1) adjustable shelf.	$1,419
3390-0256	Compartment L3 to have the following storage package: (2) vertical partitions (1) 35" off rearward wall and (1) 15" off rearward wall. The following located forward of the partition: (2) adjustable heavy duty peg tool boards. The following located between of the partitions: (2) adjustable shelves. The following located rearward of partition: (1) adjustable shelf. (1) full width permanent shelf located at bottom of compartment offset.	$3,637
3390-0257	Compartment R1 to have the following storage package: (1) floor mntd roll-out tray w/500lb slds,(1) adjustable shelf in lower area and (1) permanent shelf located at offset (notched as required for raceway).	$1,316
3390-0259	Compartment R3 to have the following storage package in the lower full depth area: (1) vertical partition 16" off forward wall and the following located forward of the partition: (1) adjustable heavy duty toolboard. Rearward of partition: (2) adjustable shelves.	$1,685
3390-0260	Compartment [#LOC] to have the following storage package: (1) vertical partition 10" off rearward wall and the following located forward of the partition: (2) adjustable shelves. Rearward of partition: (1) 17' Little Giant Ladder.	$852
3390-0261	Compartment [#LOC] to have the following storage package: (1) vertical partition 16" off forward wall and the following located forward of the partition: (3) adjustable shelves. Rearward of partition: (1) adjustable heavy duty toolboard.	$2,813
3390-0262	Poly hose storage cassette (PR) for pre-connect 150', 1.75" hose, stored in "lay" position. The hose storage cassette shall be removable with pull out grab handle/cutout. Location: rear of body driver side outboard of pump panel lower and one above.	$1,645
3390-0266	Compartment [#LOC] to have the following storage package: (1) vertical partition 26" off forward wall and the following located forward of the partition: (1) floor mntd roll-out tray w/500lb slds and (2) adjustable shelves. Rearward of partition: (2) adjustable heavy duty tool boards.	$2,878
3390-0267	Compartment [#LOC] to have the following storage package: (1) vertical partition centered off forward wall and the following located forward of the partition: (1) floor mounted roll-out tray. Rearward of partition: (2) adjustable shelves.	$1,899
3390-0268	Compartment [#LOC] to have the following storage package: (1) vertical partition centered off forward wall and the following located forward of the partition: (1) adjustable shelf. Rearward of partition: (1) floor mounted roll-out tray.	$1,479
3390-0271	Compartment [#LOC] to have the following storage package: (1) vertical partition 26" off forward wall and the following located forward of the partition: (3) adjustable shelves. Rearward of partition: (2) adjustable heavy duty tool boards.	$2,690
3390-0272	Compartment [#LOC] to have the following storage package: (1) vertical partition 16" off rearward wall and the following located forward of the partition: (4) adjustable shelves. Rearward of partition: Speedy Dry Valve and Hose.	$1,594

3390-0273	Compartment [#LOC] to have the following storage package: (1) vertical partition 24" off rearward wall and the following located forward of the partition: (1) adjustable tray, (1) adjustable roll-out tilt down tray and (1) floor mounted slide-out tray. Rearward of partition: (2) adjustable slide-out toolboards.	$5,140
3390-0274	Compartment [#LOC] to have the following storage package: (1) vertical partition 22" off rearward wall and the following located forward of the partition: (1) floor mntd roll-out tray w/500lb slides and (2) adjustable shelves w/500lb slides . Rearward of partition: (1) adjustable roll out heavy duty tool board w/500lb slides.	$2,499
3390-0275	Compartment [#LOC] to have the following storage package: (1) vertical partition 11" off forward wall and the following located rearward of the partition: (1) adjustable shelf with tracks in lower area and (1) adjustable roll out tilt down tray above.	$1,823
3390-0277	Compartment [#LOC] to have the following storage package: (1) vertical partition 18" off forward wall and the following located forward of the partition: (1) adjustable toolboard. Rearward of partition: (2) adjustable shelves.	$1,684
3390-0278	Compartment [#LOC] to have the following storage package: (1) vertical partition approximately 12" off rearward wall and the following located forward of the partition: (2) adjustable roll out heavy duty tool boards w/500lb slides . Rearward of partition: (3) adjustable shelves.	$2,703
3390-0279	Compartment [#LOC] to have the following storage package: (1) vertical partition rearward of cord reel and the following located rearward of partition: (1) adjustable shelf.	$635
3390-0280	Storage system for compartment [#LOC]. Includes vertical partition offset 20" from rearward wall, (2) adj. HD tool boards to rear of partition. (1) Adjustable rollout tray, (1) floor mounted rollout tray and (1) adjustable shelf (notched for clearance as required in the upper storage location) all ahead of partition.	$3,850
3390-0281	Compartment [#LOC] to have the following storage package: (2) Full width permanent shelves, (1) approximately 24" off the floor and (1) approximately 49" off the floor. (1) Vertical partition approximately 12" off forward wall located between the full width permanent shelves. The following located forward of the partition: (2) adjustable shelve. Rearward of partition: (1) adjustable roll out heavy duty tool board w/500lb slides .	$2,327
3390-0282	Compartment [#LOC] to have the following storage package: (1) vertical partition approximately 8" off rearward wall and the following located forward of the partition: (1) floor mounted roll-out tray w/500lb slides, (1) fixed shelf approximately 25" from the ceiling.	$1,100
3390-0283	Compartment [#LOC] to have the following storage package: (1) vertical partition approximately 13" off rearward wall, (1) fixed shelf mounted at the compartment offset below extrusion.	$452
3390-0286	Compartment [#LOC] to have the following storage package: (1) vertical partition approximately 20" off rearward wall and the following located forward of the partition: (1) floor mounted roll out tray w/ 500lb slides and (2) adjustable roll-out tray w/500lb slides (1) upper and (1) lower. Rearward of partition: (2) adjustable roll out heavy duty tool boards w/500lb slides.	$4,051
3390-0287	Compartment [#LOC] to have the following storage package: (1) vertical partition centered off forward wall and the following located rearward of partition: (1) floor mounted roll-out tray and (1) adjustable shelf.	$1,479
3390-0288	Compartment [#LOC] to have the following storage package: (1) vertical partition centered off rearward wall and the following located forward of the partition: (1) adjustable heavy duty peg tool board and fixed forward wall mounted peg toolboard spaced off wall a half inch. Rearward of partition: (3) adjustable shelves.	$2,375
3390-0289	Compartment L1 to have the following storage package: (1) floor mounted roll out tray w/ 500lb slides extending approximately 40" from the forward wall. Rearward of floor mounted tray (1) roll out heavy duty tool board with Pac Trac panels vertically stacked on each side of tool board.	$1,423
3390-0290	Compartment [#LOC] to have the following storage package: (1) vertical partition 15" off rearward wall and the following located forward of the partition: (1) 2"x2" angle floor mounted to outside edge and (1) permanent shelf just below breaker box. Rearward of partition: (1) adjustable heavy duty tool boards.	$1,283
3390-0291	Compartment [#LOC] to have the following storage package in the lower full depth area: (1) vertical partition 15" off forward wall and the following located forward of the partition: (1) adjustable heavy duty toolboard. Rearward of partition: (1) adjustable shelf.	$1,433
3390-0292	Compartment L1 to have the following storage package: (1) fixed shelf located above CTECH toolbox, (2) adjustable shelves above fixed shelf.	$752
3390-0293	Compartment [#LOC] to have the following storage package: (1) vertical partition 12" off forward wall, and the following located forward of the partition: (1) adjustable tool board, rearward of the partition: (3) adjustable shelves.	$2,203
3390-0294	Compartment [#LOC] to have the following storage package: (1) vertical partition 8" off rearward wall, and the following located forward of the partition: (1) floor mntd roll-out tray w/500lb slds, (3) adjustable shelves. Rearward of partition: open for storage.	$1,780
3390-0295	Compartment L3 to have the following storage package: (1) vertical partition 20" off forward wall and the following located forward of the partition: (1) floor mntd roll-out tray w/500lb slds sized to fit a road cone w/ 16"x16" base and installed allowing for speedy dry hopper deployment tube to pass forward of tray. Rearward of partition: (1) floor mntd roll-out tray w/500lb slds, (2) adjustable shelves.	$2,023
3390-0296	Compartment [#LOC] to have the following storage package: (1) vertical partition 25" off forward wall and the following located forward of the partition: (1) floor mntd roll-out tray w/500lb slds and (2) adjustable shelves. Rearward of partition: (2) adjustable heavy duty tool boards.	$2,878

3390-0297	Compartment L3 to have the following storage package: (1) vertical partition 20" off forward wall and the following located forward of the partition: (1) floor mntd roll-out tray w/500lb slds sized to fit a road cone w/ 16"x16" base and installed allowing for speedy dry hopper deployment tube to pass behind the tray. Rearward of partition: (1) floor mntd roll-out tray w/500lb slds, (1) adjustable shelf.	$1,787
3390-0298	Compartment L4 to have the following storage package: (1) vertical partition 27" off forward wall and the following located forward of the partition: (2) adjustable heavy duty toolboards. Rearward of partition: (2) adjustable shelves.	$2,508
3390-0300	Compartment [#LOC] to have the following storage package: (1) vertical partition 24" off forward wall and the following located forward of the partition: (1) floor mntd roll-out tray w/500lb slds and (2) adjustable shelves. Rearward of partition: (2) adjustable heavy duty tool boards.	$2,878
3390-0301	Compartment [#LOC] to have the following storage package: (1) vertical partition 24" off rearward wall and the following located forward of the partition: (1) floor mntd roll-out tray w/500lb slds and (2) adjustable shelves. Rearward of partition: (1) adjustable tool board with 500# slides includes upper and lower adjustable track. Toolboard sized to compartment height and depth as applicable. The ceiling shall be cut to allow the hydraulic reel lines to drop into R2 from the roof top compartment above. The cutout shall include captive rollers and visibility to the reels as mounted above.	$2,998
3390-0302	Compartment [#LOC] to have the following storage package: (1) vertical partition 27" off rearward wall and the following located forward of the partition: (1) adjustable heavy duty toolboard. Rearward of partition: (1) floor mntd roll-out tray w/500lb slds and (1) adjustable shelf.	$2,131
3390-0303	Compartment [#LOC] to have the following storage package: (1) vertical partition 24 " off forward wall and the following located forward of the partition: (1) floor mounted roll-out tray w/500lb slides and (2) adjustable shelves. Rearward of partition: (2) adjustable heavy duty tool boards.	$2,878
3390-0304	Compartment [#LOC] to have the following storage package: (1) vertical partition 20" off forward wall and the following located forward of the partition: (2) adjustable shelves. Rearward of partition: (2) adjustable heavy duty tool boards.	$2,232
3390-0305	Compartment L1 to have the following storage package: (1) vertical partition 12" off rearward wall and the following located forward of the partition: (2) adjustable shelves -Located in upper portion of compartment. Rearward of partition: (1) adjustable tool board.	$1,716
3390-0306	Compartment L3 to have the following storage package: (1) vertical partition 20" off forward wall and the following located forward of the partition: (1) floor mntd roll-out tray w/500lb slds, (1) adjustable roll-out/tilt down tray and (3) adjustable shelves. Rearward of partition: (2) adjustable heavy duty tool boards.	$4,829
3390-0307	Compartment L3 to have the following storage package: off the forward wall (1) fixed shelf with inverted lip approx. 30.5" above the floor, 36" in width (front to rear). The vertical support for the fixed shelf (36" off forward wall) shall be hung from the ceiling. (1) Floor mounted roll-out tray w/500lb slides directly below the fixed shelf and approximately the same width (36"). (2) Adjustable heavy duty tool boards mounted rearward of fixed shelf .Tool boards sized to compartment height and depth as applicable. See photo in file.	$2,659
3390-0308	Compartment [#LOC] to have the following storage package: (1) vertical partition centered within the compartment and the following located forward of the partition: (2) adjustable shelves.	$776
3390-0309	Compartment B1 to have the following storage package: (1) vertical partition centered off driver side wall and the following located left of the partition: (1) floor mntd roll-out tray w/500lb slides (1) adjustable roll-out tray w/500lb sildes and (1) adjustable roll-out/tilt-down tray. Right of partition: (2) heavy duty adjustable tool boards w/PAC trac on one side.	$5,327
3390-0311	Compartment [#LOC] to have the following storage package: (1) vertical partition 20" off forward wall and the following located forward of the partition: (1) adjustable heavy duty toolboard. Rearward of partition: (1) adjustable mounted roll-out/tilt-down tray, (1) adjustable shelf and (1) floor mounted 500# roll-out tray.	$3,291
3390-0312	Compartment [#LOC] to have the following storage package: (1) vertical partition 20" off rearward wall and the following located forward of the partition: (1) adjustable heavy duty toolboard. Rearward of partition: (1) adjustable mounted roll-out/tilt-down tray.	$2,406
3390-0313	Compartment L3 to have the following storage package: (1) vertical partition 16" off forward wall and the following located forward of the partition: (1) adjustable heavy duty tool board. Rearward of partition: (1) floor mntd roll-out tray w/500lb slides and (2) adjustable shelves with tracks.	$2,364
3390-0314	Compartment [#LOC] to have the following storage package: (1) vertical partition 16" off forward wall and the following located forward of the partition: (1) adjustable shelf and (1) adjustable roll out tray with a 2" front lip and mechanical latching system. Rearward of partition: (2) adjustable heavy duty peg tool bards, these toolboards shall use mechanical latches (no gas shocks).	$4,097
3390-0315	Compartment [#LOC] to have the following storage package: (1) vertical partition 16" off forward wall and the following located forward of the partition: (1) adjustable shelf . Rearward of partition: (2) adjustable heavy duty peg tool boards , these tool boards shall use mechanical latches (no gas shocks)..	$2,968
3390-0316	Compartment [#LOC] to have the following storage package: (1) vertical partition 20" off forward wall and the following located forward of the partition: (1) adjustable shelf. Rearward of partition: (2) adjustable heavy duty peg tool boards, these toolboards shall use mechanical latches (no gas shocks).	$2,297
3390-0317	Compartment [#LOC] to have the following storage package: (1) vertical partition 20" off forward wall and the following located forward of the partition: (1) adjustable heavy duty tool board. Rearward of partition: (1) floor mntd roll-out tray w/500lb slds and (2) adjustable shelves.	$2,082
3390-0318	Compartment [#LOC] to have the following storage package: (1) vertical partition 12" off forward wall and the following located forward of the partition: (1) adjustable heavy duty toolboard. Rearward of partition: (2) adjustable shelves.	$2,232

3390-0319	Compartment [#LOC] to have the following storage package: (1) vertical partition 14" off rearward wall and the following located forward of the partition: (1) floor mntd roll-out tray w/500lb slds and (2) adjustable shelves. Rearward of partition: (1) adjustable heavy duty toolboard.	$2,878
3390-0320	Storage system for compartment [#LOC]. Includes vertical partition 24" from left side wall, (2) adj. HD tool peg boards rearward of partition and (2) adjustable shelves ahead of partition. Aerial application.	$2,720
3390-0322	Lower Compartment R3 to have the following storage package: (1) vertical partition 21.25" off rearward wall and the following located forward of the partition: (1) floor mounted roll-out tray w/500lb slds. Rearward of partition: (1) adjustable shelf.	$1,283
3390-0328	Compartment [#LOC] to have the following storage package: (1) vertical partition 20" off forward wall and the following located rearward of the partition: (1) floor mntd roll-out tray w/500lb slds and (2) adjustable shelves. Forward of partition: (2) adjustable heavy duty tool boards.	$2,878
3390-0329	Compartment LT and RT transverse to have the following storage package: (1) vertical partition 12" off forward wall in upper available transverse area above the frame rails to extend full width of the floor transverse area above rails and the following located forward of the partition: (2) adjustable shelves with tracks each side to extend to the half way depth of the transverse. These shelves to have lips all around to prevent items falling from shelf in transverse interior. Rearward of partition: (1) adjustable heavy duty tool board with hidden shock each side to be half depth of transverse and to extend from transverse floor up to available space or to other compartment options.	$3,757
3390-0330	Compartment L3 to have the following storage package: (1) vertical partition 30" off rearward wall and the following located forward of the partition: (2) adjustable roll out trays w/500lb slds. Rearward of partition: (2) adjustable heavy duty roll out toolboards spaced evenly from wall in available space.	$3,965
3390-0331	Compartment L1 to have the following storage package: (1) vertical partition 20" off rearward wall and the following located forward of the partition: (1) floor mntd roll-out tray w/500lb slds and (1) adjustable roll out tray w/500lb slds. Rearward of partition: (1) adjustable heavy duty roll out toolboard.	$2,878
3390-0335	Vertical partition wall. Locate in the center of the transverse pump compartment. Partition will run from the front of truck to rear of truck dividing the compartment into equal halves.	$261
3390-0336	Compartment [#LOC] to have the following storage package: (1) vertical partition 20" off forward wall and the following located forward of the partition:(2) adjustable shelves. Rearward of partition: (2) adjustable heavy duty tool boards and a fixed rear wall mounted toolboard spaced a half inch off rear wall.	$2,791
3390-0337	(1) 24" high vertical adjustable partition at floor of upper transverse compartment above the pump module.	$327
3390-0339	Compartment [#LOC] to have the following storage package: (1) vertical partition centered off forward wall and the following located forward of the partition: (1) adjustable heavy duty tool board. Rearward of partition: (2) adjustable shelves.	$1,694
3390-0340	Compartment [#LOC] to have the following storage package: (1) vertical partition centered off forward wall and the following located forward of the partition: (2)adjustable heavy duty tool boards . Rearward of partition: (2) adjustable shelves.	$2,232
3390-0341	Compartment L4 to have the following: (1) vertical partition located 24" off rearward wall and (1) adjustable shelf with adjustable tracking forward area of partition.	$620
3390-0342	Compartment L3 to have the following storage package: (1) vertical partition centered and the following located rearward of the partition: (2) adjustable heavy duty tool boards. Forward of partition: (2) adjustable shelves.	$2,577
3390-0343	Compartment R2 to have the following storage package: (2) vertical partitions, One (1) 25" off rearward wall and One (1) 8" of the forward wall or as applicable to just provide space for speedy dry hopper dispenser tube forward of this partition. The following located rearward of the rear partition: (1) floor mntd roll-out tray w/500lb slds and (3) adjustable shelves with tracks. Forward of rear partition and rearward of forward partition (2) adjustable heavy duty roll out tool boards.	$3,696
3390-0344	Compartment L4 to have the following storage package: (1) vertical partition 20" off rearward wall and the following located forward of the partition: (1) floor mntd roll-out tray w/500lb slds and (3) adjustable shelves with tracks. Rearward of partition: (1) adjustable heavy duty tool board.	$2,625
3390-0350	Compartment [#LOC] to have the following storage package: (1) vertical partition 17" off rearward wall and the following located forward of the partition: (1) 2"x2" angle floor mounted to outside edge and (1) permanent shelf just below breaker box. Rearward of partition: (1) adjustable heavy duty tool boards.	$1,283
3390-0352	Compartment R2 to have the following storage package: (1) vertical partition located 16" off rearward wall. The following located forward of the partition: (3) adjustable roll-out trays and (3) poly boxes on the floor. Rearward of the rear partition shall be (1) adjustable heavy duty rollout toolboard. Mounted on the rearward side of the toolboard at the bottom shall be an aluminum box to hold a rescue jack (not provided. and one (1) box shipped loose.	$6,248
3390-0353	Compartment R4 to have the following storage package: (1) floor mntd roll-out tray w/500lb slds, (1) adjustable roll-out tray w/500lb slds and (1) air bag compartment as high as possible. Each slot of the air bag shall be 2.25" high and storage of (2) each: 24" x 24" , 20" x 20" and 16" x 16" w/ straps included. (1) adjustable shelf with inverted lips for mounting of air bag storage assembly. Locate (1) adjustale shelf above th airbag storage.	$3,266
3390-0354	Compartment L2 to have the following storage package: (1) vertical partition 28" off forward wall and the following located forward of the partition: (1) floor mntd roll-out tray w/500lb slds and (2) adjustable roll-out trays w/500lb slds. Rearward of partition: (2) adjustable Pac Trac Brand tool boards.	$5,839

3390-0355	Compartment R4 to have the following storage package: (1) vertical partition 12" off forward wall and the following located forward of the partition: space for speedy dry hopper hose. Rearward of partition: (2) adjustable shelves and (1) floor mounted roll-out tray.	$1,523
3390-0356	Compartment L1 lower rearward compartment floor shall have a .188 smooth plate aluminum hose storage container with a aluminum dividers sized to fit (1) 25' section of 5.00 LDH hose, (2) 25' sections of 3.00" DJ hose all stored on end (doughnut rolls) for easy deployment. A storage area for a customer supplied Kochek brand 6in. low level strainer model LL60 stored upside down below the slide out tray. A storage area for a customer supplied Kochek brand floating strainer model FS60 stored below the upper slide out/tilt down tray.	$748
3390-0357	Compartment L3 to have the following storage package: (1) vertical partition 24" off rearward wall and the following located forward of the partition: (1) floor mntd roll-out tray w/500 lb slds and (2) adjustable shelves with tracks. Rearward of the partition: One (1) adjustable heavy duty roll out tool board with tracks.	$2,376
3390-0358	Compartment R1 to have the following storage package: (1) fixed shelf at the compartment break dividing upper and lower compartment.(1) vertical partition 10" off forward wall in the lower area of compartment under fixed shelf. (1) adjustable shelf with tracks in lower compartment rearward of lower partition. Above the fixed shelf shall be a second vertical partition to extend from fixed shelf up to compartment top as applicable. The upper partition shall be 28" from rearward compartment wall or as applicable just rearward of pump access panel in compartment allowing for removal of the access panel.	$948
3390-0359	Compartment R3 to have the following storage package: (1) full compartment height vertical partition 18" off rearward wall and the following located forward of the partition: (1) floor mounted roll-out tray w/500lb slides, (1) adjustable shelf with tracks in upper shallow area, and one fixed shelf at the compartment break. Rearward of the partition the compartment shall be open storage.	$1,203
3390-0361	Compartment [#LOC] to have the following storage package: (1) vertical partition 18" off rearward wall and the following located forward of the partition: (3) adjustable heavy duty pegboard toolboards. Rearward of partition: (3) adjustable shelves.	$4,150
3390-0362	Compartment [#LOC] to have the following storage package: (1) vertical partiton 18" off forward wall and the following located forward of the partiton: (1) adjustable shelf. Rearward of partition: (1) floor mntd roll-out tray 500 lb capacity, (2) adjustable roll-out trays 500 lb capacity and (1) adjustable shelf.	$3,567
3390-0363	Compartment L1 to have the following storage package: (1) vertical partition 12" off rearward wall and the following located forward of the partition: (1) floor mntd roll-out tray w/500lb slds and (2) adjustable shelves. Rearward of partition: (1) adjustable heavy duty tool board.	$1,514
3390-0364	Compartment R3 to have the following storage package: (1) vertical partition 12" from the forward wall to extend from the floor to the bottom of the shelf at the compartment break, A fixed shelf at the compartment break, and a floor mounted roll-out generator tray in the rearward area of the compartment rearward of the partition.	$1,256
3390-0365	Compartment [#LOC] to have the following storage package: (1) vertical partition located 12" off forward wall and the following located forward of the partition: open area for speedy dry hopper hose. Rearward of partition: (3) adjustable heavy duty tool boards.	$3,506
3390-0366	Compartment L1 to have the following storage package: (1) vertical partition 20" off forward wall and the following located forward of the partition: (1) adjustable heavy duty tool board. Rearward of partition: (1) adjustable shelf.	$1,489
3390-0369	Compartment L3 to have the following storage package: (1) permanent shelf mounted 40" off the floor and (1) adjustable heavy duty tool board located below shelf in rearward L3. Adjustable track for toolboard is to be 12" in length..	$1,184
3390-0370	Compartment L4 to have the following storage package: (1) Fixed shelf located over optioned gas generator to extend full width of the compartment. One (1) vertical bolt in partition to be located just rearward of the optioned reel in the upper area of the compartment over fixed shelf. Two (2) adjustable shelves with tracks to be located rearward of the partition above the fixed shelf.	$1,042
3390-0371	Compartment L1 to have the following storage package: (1) vertical partition 10" off forward wall and (1) vertical partition 10" rearward of the first partition and the following located rearward of the second partition: (1) floor mntd roll-out tray w/500lb slds.	$1,079
3390-0372	Compartment R1 to have the following storage package: (1) vertical partition 10" off forward wall and (1) vertical partition 10" rearward of the first partition and the following located rearward of the second partition: (1) floor mntd roll-out tray w/500lb slds.	$1,079
3390-0374	Compartment L1 to have the following storage package: (1) vertical partition 26" off forward wall and the following located forward of the partition: (1) adjustable shelf. Rearward of partition: (2) adjustable shelves and (1) floor mounted rollout tray.	$1,939
3390-0376	Compartment L1 to have the following storage package: (1) vertical partition 20" off rearward wall and the following located forward of the partition: (1) floor mounted roll-out tray and (2) adjustable shelves. Rearward of the partition: (1) floor mounted roll-out tray to hold Speedy Dry Hopper. Tray to have notch on front wall for Speedy Dry Hopper valve. Hopper to hold #200 pounds.	$3,710
3390-0377	Compartment L3 to have the following storage package: (1) vertical partition 20" off rearward wall and the following located forward of the partition: (1) floor mntd roll-out tray w/500lb slds and (2) adjustable roll-out trays w/500lb slds. Rearward of partition: (1) adjustable heavy duty toolboard.	$4,265
3390-0378	Compartment R4 to have the following storage package: (1) vertical partition 30" off rearward wall and the following located rearward of the partition: (1) floor mntd roll-out tray w/500lb slds and (2) adjustable shelves. Forward of partition: (2) adjustable heavy duty tool boards.	$2,878

3390-0379	Compartment L4 to have the following storage package: (1) vertical partition 10" off rearward wall and the following located forward of the partition:(2) adjustable shelves and (1) floor mounted roll-out tray.	$1,523
3390-0380	Compartment L3 to have the following storage package: (1) vertical partition 14" off forward wall and the following located forward of the partition: (1) adjustable heavy duty toolboard. Rearward of partition: (2) adjustable mounted roll-out/tilt down trays with aluminum frame, (1) adjustable shelf with tracks, and (1) floor mntd roll-out tray w/500lb slides.	$4,814
3390-0385	Compartment R2 to have the following storage package: (1) vertical partition 12" off forward wall and the following located forward of the partition: (2) adjustable shelves. Rearward of partition: (1) 18" wide floor mounted roll-out tray with 48" high tool board centered on the floor of the tray.	$2,222
3390-0386	Compartment L2 to have the following storage package: (1) vertical partition 22" off forward wall and the following located forward of the partition: (1) adjustable shelves. Rearward of partition: (3) adjustable tool boards.	$3,064
3390-0388	Storage system for compartment L3. Includes vertical partition centered front to rear, one (1) adjustable tool board to the rear of partition. Two (2) adjustable shelves and (1) floor mounted rollout tray ahead of partition.	$2,731
3390-0389	Compartment L1 to have the following storage package: (1) vertical partition 12" off rearward wall and the following located forward of the partition: (2) adjustable shelves: Rearward of partition: (1) adjustable heavy duty toolboard.	$2,232
3390-0390	Compartment L3 to have the following storage package: (1) vertical partition 12" off rearward wall and the following located forward of the partition: (1) floor mntd roll-out tray w/500lb slides and (1) adjustable shelf with tracks.	$1,286
3390-0391	Compartment L1 lower shall have a .188 smooth plate aluminum equipment storage container with aluminum dividers sized to fit (1) Kochek brand 6in. low level strainer model LL60 stored on its base, (1) Kochek brand floating strainer model FBS60 stored on edge and (1) Kochek BS60 mounted between. The top surface has a lip to keep items retained. Strainers not included.	$568
3390-0392	Compartment B1 to have the following storage package: (1) floor mounted roll-out tray with 500lb slides with 6" lips. Tray to be held back an additional 4" from door opening to allow for hose deployment. (1) roller assembly mounted to front lip of tray, centered on reel, for electric cord reel.	$1,473
3390-0394	Compartment L3 to have the following storage package: (1) vertical partition 20" off forward wall and the following located forward of the partition: (2) adjustable shelves. Rearward of partition: (2) adjustable heavy duty tool boards.	$2,579
3390-0399	Compartment L1 to have the following storage package: (2) permanent mounted shelves, (1) mounted at compartment offset and (1) mounted just below the breaker box. There shall be (1) adjustable heavy duty tool board mounted in between and to the permanent shelves. Below the lower permanent mounted shelf shall be (1) floor mntd roll-out tray w/500lb slds.	$1,693
3390-0400	Compartment L1 to have the following storage package: (1) vertical partition 16" off forward wall and the following located forward of the first partition: (1) adjustable heavy duty toolboard. Rearward of first partition: (2) adjustable shelves notched around the DOT bottle. The bottom shelf to be located 12" from the floor due to the breaker box location..	$3,283
3390-0401	Compartment R1 to have the following storage package: (1) vertical partition mounted to the rear side of the cover for the vertical exhaust and the following located rearward of the partition: (1) floor mntd roll-out tray w/500lb slds and (2) adjustable shelves.	$1,523
3390-0402	Compartment R4 to have the following storage package: (1) vertical partition mounted to the forward side of the cover for the deck gun piping and the following located forward of the partition: (1) floor mntd roll-out tray w/500lb slds and (2) adjustable shelves.	$1,523
3390-0405	Compartment [#LOC] to have the following storage package: (1) vertical partition 20 in. off forward wall and the following located forward of the partition: (1) floor mounted roll-out tray w/500lb slides and (2) adjustable shelves. Rearward of partition: (2) heavy duty adjustable peg tool boards.	$3,538
3390-0406	Compartment L3 to have the following storage package: (1) vertical partition 20" off forward wall and the following located forward of the partition: (2) adjustable shelves. Rearward of front partition: (2) adjustable heavy duty tool-boards. (1) vertical partition located 9.5" from rear wall for a Little Giant ladder storage rearward of the partition.	$3,435
3390-0410	Compartment R1 to have the following storage package: (1) vertical partition 24" off rearward wall and the following located forward of the partition: (2) adjustable heavy duty tool boards. Rearward of partition: (2) adjustable shelves.	$1,701
3390-0411	Compartment L1 to have the following storage package: (1) vertical partition 12" off rearward wall and the following located forward of the partition: (1) adjustable heavy duty tool board. Rearward of partition: (3) adjustable shelves.	$1,965
3390-0417	Compartment L3 lower shall have a .188 smooth plate aluminum hose storage container with aluminum divider sized to fit (1) 25` section of 5.00" LDH hose and (1) 50` section of 5.00" LDH hose. Module to include drainage and drop in composite flooring for ventilation. Both rolls stored on end for easy deployment. Module to be offset forward.	$472
3390-0418	Compartment L3 to have the following storage package: (1) vertical partition 28" off the rearward wall and the following located forward of the partition: (1) floor mntd roll-out tray w/500lb slds and (2) adjustable shelves. Rearward of partition: (2) adjustable heavy duty peg tool boards.	$2,976
3390-0419	Compartment L1 lower shall have a .188 smooth plate aluminum hose storage container with aluminum dividers sized to fit (1) 25' section of 5.00" LDH hose and (2) 50' sections of 2.5" DJ hose. Nylon buckle strap assembly across face to retain hose. All rolls stored on end for easy deployment. Module to include a fixed top with 2" perimeter lip for additional storage requirements.	$798

3390-0425	Compartment B1 to have the following storage package: (1) vertical partition centered off driver side wall and the following located to driver side of the partition: (6) Zico Bottle rack for large bottles stacked (3) high x (2) wide. Each unit will have straps to hold the bottle in, an angled floor to hold bottle in place, and all top units will have a flat top. Each unit will be bolted together and be Black PVC coated. The following located to officer side of the partition: (2) adjustable shelves.	$1,657
3390-0426	Compartment [#LOC] to have the following storage package: (1) vertical partition 30" off forward wall and the following located rearward of the partition: (1) floor mounted roll-out tray w/500lb slides and (1) adjustable roll-out tray w/500lb slides with tracks. Forward of partition: (1) adjustable heavy duty tool board.	$2,832
3390-0427	Compartment L1 to have the following storage package: (1) vertical partition 13" off forward wall and the following located forward of the partition: (1) floor mntd roll-out tray w/500lb slds. Rearward of partition: (1) heavy duty adjustable tool boards.	$1,914
3390-0428	Compartment L3 to have the following storage package: (1) vertical partition centered and the following located forward of the partition: (1) adjustable shelf. Rearward of partition: (1) adjustable heavy duty toolboard.	$1,499
4000	**Pump and Tank**	
4000-0036	Stainless Steel Victaulic couplings for all discharge and intake plumbing.	$4,020
4005-0007	Hale Centrifugal Booster PTO Pump - 2 Stage	$16,226
4005-0008	Hale AP 500 PTO single stage Pump	$16,392
4005-0013	Hale QFLO 750-1250 GPM pump, single stage.	$22,567
4005-0014	Hale QMID 1250 GPM single stage Pump	$30,415
4005-0015	Hale QMAX 1000-1250 GPM single stage Pump	$27,142
4005-0016	Hale QMAX 1000-2250 GPM single stage pump.	$27,142
4005-0017	Hale QTWO 1000-1250 GPM two stage Pump	$34,282
4005-0018	Hale QTWO 1500-2000 GPM two stage pump.	$35,197
4005-0019	Waterous CS 750-1250 single stage pump.	$23,693
4005-0020	Waterous CM 750-1250 two stage Pump	$27,213
4005-0021	Waterous CSU 1500-2250 GPM single stage pump.	$26,876
4005-0022	Waterous CMU 1500-2250 GPM two stage pump.	$40,789
4005-0023	Waterous S100 2000 GPM Pump for RLP	$36,402
4005-0024	Hale RSD (1500 GPM) single stage RGA gear box driven pump. For use with rear mount pump body.	$29,136
4005-0036	Extended Hale Pump 1 Year Warranty in addition to the standard 2 year warranty.	$708
4005-0037	Extended Hale Pump 2 Year Warranty in addition to the standard 2 year warranty.	$1,360
4005-0038	Extended Hale Pump 3 Year Warranty in addition to the standard 2 year warranty.	$2,013
4005-0039	Extended Waterous Pump 3 Year Warranty in addition to the standard 2 year warranty.	$1,711
4005-0040	Pump Portable 500 GPM Hale w/4" Tank-to-pump. Location [#LOC]	$21,737
4005-0041	Test pump with 6" steamers and switch to 4.5" steamers afters test.	$171
4005-0044	Rating 3000 GPM Industrial	$2,663
4005-0049	Class 1 Pump/Pump Module Package. Includes the following: LED panel lights, (1) DSDM Pump, (1) Class 1 Captain Pressure Govenor, (1) Enfo IV, (1) Class 1 Intelli-tank water and foam level gauge, (1) 2.1A Foam Logix - plumbed to speedlay preconnects and front jump. (1) 2" tank fill, (1) 3" tank to pump, (1) driver and (1) officer 2.5" aux. intake, (1) driver side 2.5" and (1) 3" discharge w/integral droops, (1) officer side 3" discharge w/integral droop, officer side lower intake port for 5" front intake application w/MIV-E (E-ONE to do piping from Class 1 MIV-E to front of cab), (1) 2.5" driver side front hosebed discharge, (2) 1.5" speedlay preconnects, (1) 3" deck gun (pipe offset to driver side due to access door in pan) and (1) 1.5" front bumper discharge (swivel located on bumper to driver side). All discharge/intakes to be electric valves and controlled from inside rear of cab.	$76,878
4005-0052	Hale QMAX 1500-2250 GPM single stage Pump with K Gear Box	$28,190
4005-0057	Hale DSD Pump 750/1500 GPM single stage	$30,668
4005-0060	Hale HPX300 BD26 Hale Portable Pump mounted in pan. W/Remote controls in Cab. Hook up to Chassis Fuel System.	$19,812
4005-0061	Hale AP 500 MGA T-Case Driven single stage Pump.	$20,588
4005-0062	Waterous S100D (1500 GPM) single stage pump. For use with rear mount pump body.	$38,029
4005-0063	Hale QFLO Plus 750-1250 GPM Pump single stage	$41,743
4005-0079	Hale DSD Pump 750/1500 GPM single stage	$26,853
4005-0080	Hale Centrifugal CBP Booster Pump - 1/Stage w/T-CASE	$18,247
4005-0081	Hale RSD single stage, PTO driven pump. For use with rear mount pump body and mid-ship engine applications.	$20,229
4005-0082	Hale DSD single stage pump.	$26,179
4005-0083	Rating 1500 GPM. Includes rams horn intake adaptors (1) each side	$1,227
4005-0085	Hale QMAX-21L 1750 pump. Tradition.	$24,154
4005-0086	Hale RSD/RGA single stage pump. For use with rear mount pump body.	$29,166
4005-0087	Waterous S100D/TC20 single stage pump. For use with rear mount pump body.	$27,797
4005-0096	Waterous CMU 1500-2250 GPM two stage Pump	$30,460
4005-0098	Waterous Pump TPP-5 Extended Warranty.	$1,711
4005-0099	Hale Pump Pro-Tech Extended 3 Year Warranty in addition to the standard 2 year warranty.	$1,935
4005-0100	Hale AP50 PTO driven pump. Includes driver side 5" intake with cap (shipped loose). Capacity of 500GPM/1892LPM	$12,590
4005-0101	Hale MBP PTO driven pump. Includes driver side 6" intake with cap (shipped loose). Capacity of 750GPM/2839LPM.	$16,898
4005-0102	Hale MBP PTO driven pump. Includes driver side 6" intake with cap (shipped loose). Capacity of 1000GPM/3785LPM.	$16,898

4005-0122	Waterous CSU 1500-2250 GPM single stage Pump. Shall include the Endurance CSC20 Waterous, C20 transmission.	$37,615
4005-0130	Hale QFLO-PLUS 750-1250 GPM Pump single stage	$22,333
4005-0131	E-ONE 1250-1500 GPM pump, single stage.	$34,382
4005-0132	Hale AP 500 RGA T-Case Driven single stage Pump.	$20,588
4005-0138	Hale QMAX 1000-2250 GPM single stage pump.	$35,510
4005-0143	Hale DSD Pump 750/1500 GPM single stage	$22,116
4005-0147	E-ONE 1250-1500GPM PTO pump, single stage.	$34,387
4005-0150	Hale MG Pump 500/1000 GPM single stage	$21,382
4005-0152	Hale MG Pump 500/1000 GPM single stage	$18,092
4005-0154	Hale QMAX-XS 1250-2250 GPM single stage pump.	$28,082
4005-0155	Hale RME/RGA 3000gpm Pump for Rear Mount with (3) 6" Inlets.	$38,516
4005-0169	Hale QMAX-XS R 1250-2250 GPM single stage pump. (R GEAR BOX)	$28,692
4005-0171	Waterous CXVK 750-1250 single stage PTO Pump. On 4X4 commercials, requires PTO on top port of the transmission.	$23,599
4005-0172	Waterous CS 750-1250 single stage pump. (With gear box to front IPOS)	$27,052
4005-0182	Waterous CXVK 1250 GPM single stage pump with 150CFM CAFS	$63,315
4005-0184	Waterous CXS-C20C 1250-1500 GPM single stage pump for eMax configurations.	$35,602
4005-0185	Hale CBP 250 GPM PTO pump.	$9,989
4005-0187	Hale APMG50 Pump 500GPM single stage.	$15,722
4010-0159	Fill tower locations. The water and foam fill towers shall be relocated so they are centered left to right about the apparatus after the tanks have been loaded.	$286
4010-0174	530 Gallon "T" Water Tank. UPF Poly III color fill towers. Note: Any foam cell(s) will reduce the overall water capacity.	$5,517
4010-0175	530 Gallon "R" Water Tank UPF Poly III color fill towers. Note: Any foam cell(s) will reduce the overall water capacity.	$5,050
4010-0176	780 Gallon "T" Water Tank. UPF Poly III color fill towers. Note: Any foam cell(s) and/or storage options through the tank will reduce the overall water capacity.	$6,108
4010-0177	780 Gallon "R" Water Tank. UPF Poly III color fill towers. Note: Any foam cell(s) and/or storage options through the tank will reduce the overall water capacity.	$6,035
4010-0178	1030 Gallon "T" Water Tank. UPF Poly III color fill towers. Note: Any foam cell(s) and/or storage options through the tank will reduce the overall water capacity.	$7,605
4010-0179	1030 Gallon "R" Water Tank. UPF Poly III color fill towers. Note: Any foam cell(s) and/or storage options through the tank will reduce the overall water capacity.	$7,346
4010-0180	1280 Gallon "T" Water Tank. UPF Poly III color fill towers. Note: Any foam cell(s) and/or storage options through the tank will reduce the overall water capacity.	$9,720
4010-0181	1280 Gallon "R" Water Tank. UPF Poly III color fill towers. Note: Any foam cell(s) and/or storage options through the tank will reduce the overall water capacity.	$9,136
4010-0182	1530 Gallon "T" Water Tank. UPF Poly III color fill towers. Note: Any foam cell(s) and/or storage options through the tank will reduce the overall water capacity.	$11,675
4010-0183	530 Gallon "L" shaped Water Tank. UPF Poly III color fill towers. Includes lowered rear section for lower hose bed height. Note: Any foam cell(s) optioned will reduce the overall water capacity.	$8,136
4010-0184	780 Gallon "L" shape Water Tank. UPF Poly III color fill towers. Includes lowered rear section for lower hose bed height. Note: Any foam cell(s) optioned will reduce the overall water capacity.	$8,728
4010-0185	1030 Gallon "L" shape Water Tank. Includes lowered rear section for lower hose bed height. Note: Any foam cell(s) optioned will reduce the overall water capacity. UPF Poly III color fill towers.	$10,798
4010-0186	530 Gallon "R" Water Tank Note: Any foam cell(s) will reduce the overall water capacity. UPF Poly III color fill towers. For use with rear mounted pumps only.	$4,464
4010-0188	1030 Gallon "R" Water Tank. UPF Poly III color fill towers. For use with rear mounted pumps only. Note: Any foam cell(s) and/or storage options thru the tank will reduce the overall water capacity.	$6,576
4010-0189	1530 Gallon "T" Water Tank. UPF Poly III color fill towers - tanker version. Note: Any foam cell(s) and/or storage options thru the tank will reduce the overall water capacity.	$10,378
4010-0190	1830 Gallon "T" Water Tank. UPF Poly III color fill towers. Note: Any foam cell(s) and/or storage options thru the tank will reduce the overall water capacity.	$12,338
4010-0191	2030 Gallon "T" Water Tank. UPF Poly III color fill towers. Note: Any foam cell(s) and/or storage options thru the tank will reduce the overall water capacity.	$13,645
4010-0192	2030 Gallon Tandem "T" Water Tank. UPF Poly III color fill towers. Note: Any foam cell(s) and/or storage options thru the tank will reduce the overall water capacity.	$14,951
4010-0193	2530 Gallon Tandem "T" Water Tank. UPF Poly III color fill towers. Note: Any foam cell(s) and/or storage options thru the tank will reduce the overall water capacity.	$18,633
4010-0194	3030 Gallon Tandem "T" Water Tank. UPF Poly III color fill towers. Note: Any foam cell(s) and/or storage options thru the tank will reduce the overall water capacity.	$22,314
4010-0211	2900 Gallon Tandem "T" Water Tank. UPF Poly III color fill towers. Note: Any foam cell(s) and/or storage options thru the tank will reduce the overall water capacity. Tank capacity is 2900 US gallons / 2414 Imperial gallons / 10977 Liters.	$21,358
4010-0212	780 Gallon "R" Water Tank for 4x4 chassis. UPF Poly III with color fill towers. Note: Any foam cell(s) and/or storage options thru the tank will reduce the overall water capacity. Tank capacity is 780 US gallon / 649 Imperial gallons / 2952 Liters. Includes modifications for 4x4 and plumbing applications as required.	$7,543
4010-0213	530 Gallon "L" shaped Water Tank UPF Poly III color fill towers. Includes lowered rear section for lower hose bed height. Note: Any foam cell(s) optioned will reduce the overall water capacity. Tank capacity is 530 US gallon / 441 Imperial gallons / 2006 Liters.	$8,136

4010-0214	1030 Gallon "T" Water Tank. UPF Poly III color fill towers. Note: Any foam cell(s) and/or storage options through the tank will reduce the overall water capacity. Tank capacity is 1030 US gallons / 857 Imperial gallons / 3898 Liters. Includes modifications for 4x4 and plumbing applications as required.	$9,505
4010-0217	550 Gallon "R" Water Tank UPF Poly III color fill towers. Note: Any foam cell(s) will reduce the overall water capacity.	$5,403
4010-0222	730 Gallon "R" Water Tank. UPF Poly III color fill towers. Note: Any foam cell(s) and/or storage options thru the tank will reduce the overall water capacity. Tank capacity is 730 US gallon / 608 Imperial gallons / 2766 Liters.	$5,813
4010-0225	1060 Gallon "R" Water Tank. UPF Poly III color fill towers. Note: Any foam cell(s) and/or storage options through the tank will reduce the overall water capacity.	$7,560
4010-0226	1030 Gallon Combo "T" Water Tank. 280 gallons water UPF Poly III blue color fill tower / 750 foam class B UPF Poly III yellow fill tower . Water tank capacity is 280 US gallons / 233 Imperial gallons / 1060 Liters. Foam tank capacity is 750 US gallons / 624 Imperial gallons / 2839 Liters.	$11,527
4010-0227	1030 Gallon Combo "T" Water Tank. 500 gallons water UPF Poly III blue color fill tower / 530 foam class B UPF Poly III yellow fill tower .Included are the notches for hosebed pans and preconnects. Water tank capacity is 500 US gallons / 416 Imperial gallons / 1892 Liters. Foam tank capacity is 530 US gallons / 441 Imperial gallons / 2006 Liters.	$11,688
4010-0231	500 Gallon "R" Water Tank UPF Poly III color fill towers. Note: Any foam cell(s) will reduce the overall water capacity.	$5,050
4010-0232	830 Gallon" L" shape Water Tank. Includes lowered rear section for lower hosebed height. Note: Any foam cell(s) optioned will reduce the overall water capacity. Tank capacity is 830 US gallons / 691 Imperial gallons / 3141 Liters. Upper section recessed area for ladders/pikepoles driver side and tubes on officer side for (2) hard suction.	$10,586
4010-0233	3530 Gallon Tandem "T" Water Tank. UPF Poly III color fill towers. Note: Any foam cell(s) and/or storage options thru the tank will reduce the overall water capacity.	$24,870
4010-0237	590 Gallon "R" Water Tank. UPF Poly III color fill towers. Note: Any foam cell(s) and/or storage options through the tank will reduce the overall water capacity.	$5,074
4010-0238	880 Gallon "L" shape Water Tank. UPF Poly III color fill towers. Includes lowered rear section for lower hose bed height. Note: Any foam cell(s) optioned will reduce the overall water capacity.	$8,728
4010-0246	Fill tower locations. Water fill tower to be located driver side of hosebed, the Foam "A" centered and Foam "B" fill tower to be located to officer side of hosebed.	$286
4010-0247	720 Gallon "T" Water Tank. UPF Poly III color fill towers. Note: Any foam cell(s) and/or storage options through the tank will reduce the overall water capacity.	$5,460
4010-0248	560 Gallon "T" Water Tank. UPF Poly III color fill towers. Note: Any foam cell(s) and/or storage options through the tank will reduce the overall water capacity.	$4,631
4010-0249	720 Gallon "T" Water Tank. UPF Poly III color fill towers. Note: Any foam cell(s) and/or storage options through the tank will reduce the overall water capacity. Includes modifications for 4x4 and plumbing applications as required.	$5,460
4010-0250	1040 Gallon "R" Water Tank. UPF Poly III color fill towers. Note: Any foam cell(s) and/or storage options through the tank will reduce the overall water capacity.	$7,377
4010-0252	800 Gallon "L" shape Water Tank. UPF Poly III color fill towers. Includes lowered rear section for lower hose bed height. Note: Any foam cell(s) optioned will reduce the overall water capacity.	$8,509
4010-0255	1250 Gallon "T" Water Tank. UPF Poly III color fill towers. Note: Any foam cell(s) and/or storage options through the tank will reduce the overall water capacity.	$9,720
4010-0257	780 Gallon "T" Water Tank (no "T" section to officer side of tank). UPF Poly III color fill towers. Note: Any foam cell(s) and/or storage options thru the tank will reduce the overall water capacity. Tank capacity is 780 US gallons / 649 Imperial gallons / 2952 Liters.	$6,634
4010-0258	Fill tower locations. The water and foam fill towers shall be relocated so they are centered left to right about the apparatus after the tank has been loaded. Fill towers are to be no more than 4" above top of body sides.	$286
4010-0260	Fill tower locations. The water and foam fill towers shall be re-located in the center of the hose bed pan.	$286
4010-0262	1030 Gallon half "T" Water Tank (no "T" section to officer side of tank). UPF Poly III color fill towers. Note: Any foam cell(s) and/or storage options through the tank will reduce the overall water capacity.	$8,221
4010-0266	1250 Gallon "R" Water Tank. UPF Poly III color fill towers. Note: Any foam cell(s) and/or storage options through the tank will reduce the overall water capacity.	$9,136
4010-0267	750 Gallon "R" Water Tank. UPF Poly III color fill towers. Note: Any foam cell(s) and/or storage options through the tank will reduce the overall water capacity.	$6,035
4010-0271	530 Gallon half "T" Water Tank (no "T" section to drivers side of tank). UPF Poly III color fill towers. Note: Any foam cell(s) and/or storage options through the tank will reduce the overall water capacity.	$5,517
4010-0274	1750 Gallon "T" Water Tank. UPF Poly III color fill towers. Note: total available tank capcity to be 1750 U.S. Gallons (Water, or water/foam should foams cells be added).	$13,645
4015-0002	Mechanical speed counter for Hale pumps.	$308
4015-0007	Pump cooler, 1/4" valve with 3/8" tubing.	$162
4015-0008	Zinc anodes for Hale pump (PR), (1) discharge side and (1) intake side.	$311
4015-0012	Pump shift override, side panel mounted.	$716
4015-0013	Fire Research ThrottleXcel engine throttle. Includes engine gauges.	$1,530
4015-0014	Thermal Relief Valve - Hale TRV120.	$800
4015-0015	Valve relief system, Hale TPM.	$3,579
4015-0016	Thermal relief valve, Hale TRVL-120.	$1,449
4015-0018	Valve Inlet MIV-E - Hale. Location: [#LOC].	$3,313

4015-0019	Valve inlet MIV-M, Hale. Location: [#LOC].	$2,842
4015-0020	Valve Monarch Manual - Waterous. Location: [#LOC].	$4,257
4015-0021	Valve Monarch Air Actuated - Waterous. Location: [#LOC]	$5,275
4015-0022	Mechanical pump seal - Hale.	$731
4015-0026	Electronic speed counter for Waterous pumps.	$305
4015-0027	Pump Shift Override Under L1 Compartment.	$716
4015-0029	Hale pressure relief valve.	$1,255
4015-0030	Waterous pressure relief valve.	$1,402
4015-0031	Valve Relief System - Dual TPM Required for pump rating 2250 GPM and above.	$4,235
4015-0033	Hale 2-Stage Power Operated Transfer Valve.	$1,661
4015-0035	Waterous 2-Stage electronic transfer valve.	$1,403
4015-0036	6" Additional Intake for 2250 GPM Pump.	$1,916
4015-0037	Engine throttle, vernier.	$349
4015-0039	Pump seal mechanical for Waterous pump.	$689
4015-0041	Valve Monarch Electric - Waterous. Location: [#LOC].	$5,399
4015-0042	Waterous Overheat Protection Manager.	$1,032
4015-0043	Anodes for Hale CAFSPRO Pump (Pair), (1) Discharge side and (2) Intake Side.	$467
4015-0044	Anodes for Waterous pump - (Pair) (1) discharge side and (1) intake side.	$377
4015-0045	Throttle Selection Switch on Pump Operator's Panel for Back-Up of Relief and Throttle System.	$530
4015-0046	Hale pump shift override.	$1,141
4015-0047	Additional Hale Primer Valve. Located: [#LOC].	$587
4015-0048	Pump Shift Override - driver's side under running board forward of running board tray if applicable.	$716
4015-0049	Extend Fire Pump Grease Zerks to Operator's Panel	$412
4015-0050	Relocate Primer to the Outside of the Frame Rail on Driver's Side	$91
4015-0051	Two 4.5" Steamers for Hale Qflo Pump	$730
4015-0054	Additional Waterous Primer. Located: [#LOC].	$1,315
4015-0056	Air operated master pump drain (upgrade).	$213
4015-0057	Special controls and regulator requirements for Seattle. Install RV-1 (Pressure Regulating Valve) going to pump shift to allow a max of 60 PSI on pump.	$400
4015-0058	Engine shut-down switch on pump panel. Includes coverered access.	$324
4015-0061	Ross 19 WR-D with trigger type handle, chromed, shall be provided with controls operated from the right hand pump panel. Finish in chrome plate. Testing for intake pressures shall be done at the factory so that a label can be applied to the adjustment providing accurate settings in 25 pound increments from 75 to 275 pounds of intake pressure.	$2,513
4015-0062	Primer indicator light shall be provided on the pump operator's panel, color to be red.	$112
4015-0063	TPM Relief Valve outlet to be extended to the side of truck under runningboard or compartment.	$276
4015-0064	Hale Auto Fill/Thief Inlet 2.5" Tank Fill "AutoFill" Automatic Tank Fill Valve Location: [#LOC].	$4,218
4015-0065	Schedule 40 stainless steel piping.	$1,166
4015-0066	Trident Pump Primer W/3 Barrel Push Button Control. (In addition to standard.)	$1,042
4015-0068	6" intake valve Akron electric with relief. Location: [#LOC].	$3,517
4015-0069	MIV's, Pressure Relief and Atmospheric Relief (intake relief) to be plumbed to top of heat pan.	$149
4015-0070	WATEROUS OIL PRIMER	$70
4015-0071	Valve Relief Thermal - Hale TRVL-120 W/Audible Alarm	$1,463
4015-0074	Manual remote operated master pump drain. The master drain control shall be clearly marked and placed in accessible location on driver side pump panel.	$313
4015-0077	Pump shift override location on officer side panel in place of standard.	$151
4015-0080	6" Cap Vented "IPOS"	$17
4015-0081	Hale Semi-Automatic Priming push-button control.	$488
4015-0082	Electric Over Air Actuation Pump Cooler Valve	$424
4015-0083	Electric Over Air Actuation Engine Cooler Valve	$273
4015-0084	Pump Air Blow Out with 1/4" Snubber Valve.	$243
4015-0085	Auto Tank to Pump Operation. When Switched to Automatic Mode, The Tank Valve will Close When Suction Pressure Reaches 15 PSI & Opens When Suction PressureI Drops Below 15 PSI.	$1,792
4015-0086	Pump Cooler 1/4 Turn Valve	$255
4015-0087	Engine Cooler 1/4 Turn Valve	$255
4015-0088	Portable/Qmax Pump Shall be with Manifold and check valves for Front Bumper Turret and Ground Sweep. To be use dearing Pump&Roll operation.	$875
4015-0089	Extend exhaust pipe from dunnage pan mounted portable pump in line with main exhaust system using stainless steel flexible pipe.	$116
4015-0090	Akron Test Port for Master Gauges	$93
4015-0091	Pump cooler with .75" 1/4 turn valve.	$289
4015-0092	Hale Fill Thieft Steamers to be Flush + 2 Location [#LOC]	$1,548
4015-0108	Valve Relief Thermal - Hale TRVL-120	$866
4015-0109	Galvanized Victaulic Coupling. All Victaulic couplings shall galvanized.	$212
4015-0110	Valve Monarch Manual with Akron Intake Relief- Waterous. Location: [#LOC]	$2,956
4015-0111	Ferrell Compression Fittings for all Plastic Tubing in the Pump module plumbing.	$648
4015-0113	Auto Discharge Pressure Relief Valve Preset at 125psi for Pump&Roll.	$2,467
4015-0125	Red Switch Cover on Master Drain Switch.	$13
4015-0126	Hale PTO/MIDSHIP 250GPM to 1000gpm Pump Pressure Relief Valve	$2,218
4015-0127	Fire Research Infinity vernier type engine throttle.	$670
4015-0129	Waterous Overheat Protection Manager with audible alarm.	$970
4015-0130	Additional Trident Primer Valve, Located: [#LOC].	$352

4015-0131	Hale AnodePro Kit (3) Anodes with Flange. One on each suction tube and one anode on the discharge located as close to the center of the pump as possible.	$1,094
4015-0133	Anode for Darley pump - (1) intake side.	$407
4015-0134	Class 1 Engine Twister throttle, vernier	$847
4015-0135	Mechanical speed counter for pumps.	$375
4015-0136	Mechanical Darley pump seal.	$1,025
4015-0137	Valve Monarch Manual with Indicator lights - Waterous. Location: [#LOC].	$5,078
4015-0138	6" Inlet Valve Manual Gear Operated with Relief. Location: [#LOC].	$2,867
4015-0139	Darley Pump Overheat Thermal relief valve shall be provided with a light located on pump operator's panel.	$729
4015-0144	Manual remote operated master pump drain. The master drain control shall be clearly marked and placed in accessible location rearward below running board on driver side or L1 compartment.	$313
4015-0150	Darley pump shift override.	$716
4015-0152	Hale pump shift override. Pump shift to be recess behind pump operator pump panel with door.	$1,387
4015-0155	Manual remote operated master pump/pump transmission cooler drain. The master drain control shall be clearly marked and placed in accessible location under driver side pump panel or L1 compartment.	$313
4015-0157	Waterous 2-Stage Electric Transfer Valve Manual Override locate drive side pump panel.	$263
4015-0159	Valve Inlet MIV-E - Hale. Location: [#LOC].	$3,313
4015-0160	Pump Shift Override Under R1 Compartment	$716
4015-0163	Customer supply existing midship pump shall be reused on new chassis.	$6,349
4015-0164	Factory Pump Test.	$455
4015-0166	Pump cooler, automatic with 3/8" tubing. Include a check valve that is install between the pump discharge and tank that will automatically close when drafting.	$139
4015-0172	Primer indicator light shall be provided on the pump operator's panel, color to be red. The indicator light shall be upgraded to a LED indicator light IPOS.	$169
4015-0175	Additional control and air bleeder for the MIV-E to provide controls at: [#LOC].	$533
4015-0177	Additional Anode for Darley pump. Location: Discharge side of pump.	$407
4015-0178	Anodes for Waterous pump - (Three) (1) discharge side, (1) intake side and (1) inside of tank.	$569
4015-0179	Manual override control handle on officer's side for Waterous Monarch intake valve.	$377
4015-0180	6" Intake Akron Electric Valve and 9323 Controller with relief. Location: [#LOC].	$3,517
4015-0181	Pump cooler with .75" 1/4 lift lever turn valve.	$289
4015-0182	Engine cooler with .75" 1/4 lift lever turn valve.	$289
4015-0183	Test Port 1/4" Drain Valve.	$77
4015-0186	Trident Pump Primer W/3 Barrel Push Button Control. (In place of standard primer.)	$201
4015-0187	Anodes Pro System for Hale pump (QTY3), (1) discharge side and (2) intake side with one on each side of intake.	$605
4015-0188	Red Switch Cover on rear dump valve switches.	$13
4015-0190	Remove pump from donor chassis and rebuild Hale QFlow 1250.	$9,878
4015-0191	Valve Monarch Electric - Waterous. Location:Front Intake with Elkhart Relief valve.	$4,728
4015-0192	Intake adapter 6" FNST x 6" MNST for pump intake.	$304
4015-0193	Hale 3" Auto Fill w/Thief Inlet. Locate: [#LOC].	$6,143
4015-0194	Discharge manifold to be Class1 IPOS. For Dumfries Triangle VFD Only.	$2,508
4015-0197	Pump cooler with .50" 1/4 turn valve. Include a .50" check valve to prevent back flow of water into the pump if the valve is left open.	$289
4015-0198	Front Mounted Pump Gear Box IPOS	$652
4015-0204	Trident Manually operated master pump drain. The master drain shall be clearly marked and placed in accessible location on pump panel.	$157
4015-0209	Hale Fluid Primer IPOS.	$133
4015-0210	Pump cooler with Innovative Control 1/4 turn valve with "T" handle and label.	$156
4015-0211	Anodes for Waterous pump - (2) at intake side.	$377
4015-0212	Trident Automatic Pump Primer.(In place of standard primer.)	$843
4015-0214	Additional Darley Primer Valve. Located: [#LOC].	$953
4015-0215	5" Intake Akron Hand Wheel Valve with relief. Location: drive side pump panel	$4,050
4020-0001	Additional tank sump.	$308
4020-0002	Dump Valve Mounting Plate	$568
4020-0003	Jet Dump	$568
4020-0004	Newton dump mounting plate.	$541
4020-0005	Fill Tower(s) to extend 6" above body.	$372
4020-0006	Direct 1.0" Water Tank Fill with Akron Valve Terminate with .75 Hose Bib. Location: driver side pump panel	$776
4020-0007	1.5" Tank Drain Akron Manual Valve with pull cable control at left pump panel. Valve shall be located at the tank sump and extend plumbing below frame rail.	$815
4020-0008	Water Overflow Pipe to be cut down an additional 3".	$149
4020-0009	Water fill tower to have a butterfly latch.	$179
4020-0010	Fill Tower Lids to be hinged as follows: Water Fill Tower to be hinged to front and Foam Fill Tower to be hinged to rear. Add black rubber gasket material to foam fill tower to ensure proper seal.	$411
4020-0011	Notch officer side water tank (overall tank capacity will be reduced for application). Notch to allow 2.5" rear diacharge to be routed down low to rear of unit. Discharge to be positioned towards lower area of ladder tunnel access door (height only).	$1,490
4020-0012	Vision Mark tags for water and foam fill towers ipos tags.	$73
4020-0013	Sight Level Water Gauge form into front of water tank, as a part of the tank.	$196

4020-0015	Rear tank dump. Includes painted steel assembly with manually actuated valve on driver side of dump assembly. Includes integral manual extension chute.	$2,200
4020-0016	Rear tank dump. Includes stainless steel assembly with manually actuated valve on driver side of dump assembly. Includes integral manual extension chute.	$2,674
4020-0017	Rear tank dump. Includes stainless steel assembly with electical actuated valve and integral manual extension chute.	$3,455
4020-0018	Rear tank dump. Includes painted steel assembly with manual actuated valve on top of dump assembly. For use with slip on extension and chute.	$1,324
4020-0019	Rear tank dump. Includes stainless steel assembly with manually actuated valve on top of dump assembly. For use with slip on extension and chute.	$1,596
4020-0020	Rear tank dump. Includes stainless steel assembly with electrically actuated valve. For use with slip on extension and chute.	$2,371
4020-0021	Rear tank dump. Includes painted steel assembly with manually actuated valve on top of dump assembly. Includes integral swivel chute with manual telscopic extension.	$3,287
4020-0022	Rear tank dump. Includes stainless steel assembly with manually actuated valve on top of dump assembly. Includes integral swivel chute with manual extension.	$4,757
4020-0023	Rear tank dump. Includes mild finish steel assembly with manually actuated valve on driver side of dump assembly. Includes integral electric extension chute.	$3,361
4020-0024	Rear tank dump. Includes stainless finish steel assembly with electrcially actuated valve. Includes integral manual extension chute.	$3,702
4020-0025	Rear tank dump. Includes stainless steel assembly with electric actuated valve and integral electrical extension chute.	$4,760
4020-0027	Slip-on stainless steel dump extension and chute. Includes beavertail mounted removable support arm bracket and tailboard mounted storage tray (directly below dump) with retaining straps.	$1,650
4020-0028	Slip-on mild finish dump extension and chute. Includes (1) beavertail mounted removable support arm bracket and tailboard mounted storage tray (directly below dump) with retaining straps.	$1,274
4020-0029	Driver and officer side tank dumps. Includes stainless steel assembly with electrically actuated valve and integral electrical extension chute.	$8,203
4020-0030	Driver and officer side tank dumps. Includes painted steel assembly with electically actuated valve and integral electrical extension chute.	$6,008
4020-0031	Fill Tower(s) to be 24" tall due to the ROM hosebed cover and to be located 27" off front of the tank due to drum of ROM hosebed cover.	$286
4020-0032	Dealer supplied dump extension, chute, and items for storage in or on the body. To be provided by E-ONE will be (1) support arm bracket and (2) mount points on trailing end of beavertails (support arm bracket to be shipped loose).	$239
4020-0038	Rear tank dump. Includes mild finish steel assembly with manually actuated valve on top of dump assembly. Includes integral manual extension chute.	$2,200
4020-0039	Rear tank dump. Includes painted steel assembly with electric actuated valve and integral electric extension chute.	$3,505
4020-0041	Additional Dump valve/extension switching location in Cab accessible to driver.	$372
4020-0045	Notch officer side water tank (overall tank capacity will be reduced for application). Notch to allow for a 2.5" hosebed discharge to be routed into the hosebed on officer side.	$401
4020-0046	Notch driver/officer side water tank (overall tank capacity will be reduced for application). Notch to allow for hosebed discharge(s) to be routed into the hosebed.	$401
4020-0054	Rear tank dump. Includes painted steel assembly with electric actuated valve on top of dump assembly. Includes integral swivel chute with manual extension.	$4,796
4020-0056	Tank sleeve for rear or hosebed (low hosebed applications) discharge.	$263
4020-0059	Rear tank dump. Includes painted steel assembly with electrically actuated valve. For use with slip on extension and chute.	$1,863
4020-0062	Water tank fill tower to be approximately 8" tall IPOS.	$170
4020-0063	Tank sump dump box (1) each side for newton dump mounting.	$307
4020-0064	Tank sump dump box (1) at rear for newton dump mounting.	$307
4020-0065	Notch driver side water tank (overall tank capacity will be reduced for application). Notch to allow for a 2.5" hosebed discharge to be routed into the hosebed on driver side.	$401
4020-0066	Notch driver side water tank (overall tank capacity will be reduced for application). Notch to allow a booster reel to be mounted in hosebed storage pan.	$401
4020-0067	Water Tank Notch for ladder storage above tank for (1) stokes basket.	$561
4020-0068	The Newton mounting plate shall be fitted with a stainless steel plate to cap the tank until the dealer supplied dump has been installed.	$263
4020-0069	Notch driver side water tank (overall tank capacity will be reduced for application). Notch to allow for (2) 1.5" hosebed discharges to be routed into the hosebed on driver side.	$401
4020-0070	Vertical "A" style sleeve thru tank for 50' boom support.	$664
4020-0072	Water Tank Notch for HOT SHOT hosebed storage pan.	$212
4020-0073	Water tank floor to be 1" thick material ipos 1/2" thick material.	$450
4020-0074	Water tank notched at forward top face. Notch along forward top face of tank for cylinders of the electric hosebed cover clearance.	$359
4020-0075	6" overflow pipe IPO 4" over flow pipe.	$555
4020-0076	Jet Dump 2" IPO 1.5".	$598
4020-0082	Rear tank dump. Includes stainless steel assembly with manually actuated valve on driver side of dump assembly. For use with slip on extension and chute.	$1,888
4020-0084	4" Water Tank Overflow piping to be extended below chassis frame rails and piped so as not to discharge over rear springs, axle, or fuel tank.	$359

4030-0041	Turret bumper Akron Fire Fox ARFF.	$10,718
4030-0046	TFT Tornado RC Bumper Turret with Joystick. [#LOC].	$11,403
4030-0051	TFT Tornado RC Bumper Turret with Panel Control. [#LOC].	$11,403
4030-0073	Front bumper turret, Akron Forestry 3462 with a 3293 low flow adjustable nozzle. Include 6035 Joystick, 2" electric valve, and quick disconnect. [#LOC].	$9,996
4030-0078	Akron Fire Fox roof turret 3463 with Joystick control.	$10,718
4100-0033	30 gallon integral foam tank for [#LOC]. UPF Poly III [#COL] fill tower. Foam tank capacity will reduce the water tank capacity.	$1,088
4100-0034	10 gallon integral foam tank for [#LOC]. UPF Poly III [#COL] fill tower. Foam tank capacity will reduce the water tank capacity.	$933
4100-0035	20 gallon integral foam tank for [#LOC]. UPF Poly III [#COL] fill tower. Foam tank capacity will reduce the water tank capacity.	$1,004
4100-0036	40 gallon integral foam tank for [#LOC]. UPF Poly III [#COL] fill tower. Foam tank capacity will reduce the water tank capacity.	$1,185
4100-0037	50 gallon integral foam tank for [#LOC]. UPF Poly III [#COL] fill tower. Foam tank capacity will reduce the water tank capacity.	$1,271
4100-0038	100 gallon integral foam tank for [#LOC]. UPF Poly III [#COL] fill tower. Foam tank capacity will reduce the water tank capacity.	$2,361
4100-0052	500 Gallon integral foam tank for [#LOC]. UPF Poly III [#COL] fill tower. The fill tower shall include a an expansion dome. Foam tank capacity will reduce the water tank capacity. Tank capacity is 500 US gallons / 416 Imperial gallons / 1892 Liters.	$7,306
4100-0053	30 Gallon external foam tank for [#LOC]. UPF Poly III [#COL]. Locate in storage pan.	$3,249
4100-0055	250 Gallon integral foam tank for [#LOC]. UPF Poly III [#COL] fill tower. The fill tower shall include an expansion dome. Foam tank capacity will reduce the water tank capacity. Tank capacity is 250 US gallons / 208 Imperial gallons / 946 Liters.	$3,706
4100-0056	180 Gallon integral foam tank for [#LOC]. UPF Poly III [#COL] fill tower. The fill tower shall include an expansion dome. Foam tank capacity will reduce the water tank capacity. Tank capacity is 180 US gallons / 149 Imperial gallons / 681 Liters	$3,828
4100-0058	25 gallon integral foam tank for [#LOC]. UPF Poly III [#COL] fill tower. Foam tank capacity will reduce the water tank capacity.	$1,079
4100-0059	230 Gallon integral foam tank for [#LOC]. UPF Poly III [#COL] fill tower. The fill tower shall include an expansion dome. Foam tank capacity will reduce the water tank capacity. Tank capacity is 230 US gallons / 191 Imperial gallons / 870 Liters.	$4,091
4100-0062	Label on Foam Tank to read "Class A Foam" or "Class B Foam" as necessary.	$28
4100-0064	30 Gallon external foam tank for [#LOC]. UPF Poly III [#COL] tower to be accessible from driver side. Includes bolt-on .187" diamond plate cover with end panel (if applicable) and cutout in top panel for fill tower. Locate in storage pan over pump offset to driver side.	$1,629
4110-0002	Foam tank (B) outlet. Includes 1" male adapter and connector (ship loose). Outlet location: [#LOC].	$923
4110-0003	Stainless steel foam can piercer for bottom of foam fill tower. Requires foam fill to be 16" X 16" wide.	$906
4110-0004	Foam tank shutoff. 1/4 turn shut off on each connection to the foam tank - foam discharge, refill and sending unit. The Valves shall be located at the tank.	$722
4110-0005	Direct 1.5" Foam Tank Fill with Akron 1.5" Valve. A 1.5" FNST tank fill connection with rocker lug plug, and a replaceable .25" mesh strainer on the left pump panel.	$729
4110-0006	Foam tank outlet. Includes 1" male adaptor and connector (ship loose). Outlet location: [#LOC]	$922
4110-0011	1.5" Foam tank drain Akron manual valve.	$675
4110-0013	Foam tank outlet. Includes 1.5" MNST with cap. A 1.5" FNST fitting shall be included in the loose equipment . Outlet location: [#LOC].	$1,011
4110-0014	Foam tank (B) outlet. Includes 2" male adapter. Outlet location: [#LOC].	$1,336
4110-0015	Foam tank outlet. Includes 1" Female adaptor and connector (ship loose). Outlet location: [#LOC].	$922
4110-0017	Direct 1.5" Foam Tank Fill with Akron 1.5" Valve. A 1.5" FNST tank fill connection with rocker lug plug, and a replaceable .25" mesh strainer on left side pump panel.	$729
4110-0018	Foam tank (B) outlet. Includes 1" male camlock adaptor and connector (ship loose). Outlet location: driver side pump panel.	$922
4405-0017	Booster Reel. Reel to have capacity of 200' of 1" (not included). Includes (reel side) stirrup style rewind switch. Locate [#LOC].	$2,623
4405-0020	Booster Reel. Reel to have capacity of 200' of 1" (not included). Includes stirrup style rewind switch. Locate rear body compartment.	$2,823
4405-0021	Booster reel - front bumper. Center between frame rails. Will hold 100' of 1" or 150' of 3/4" booster hose.	$6,080
4405-0022	Hannay electric rewind booster reel that shall hold 250' of 1" booster hose. (Hose not included.)	$2,653
4405-0026	Booster Reel Aluminum shall hold 100' of 1" or 150' of .75" Hose Reel installed in [#LOC]. A rewind switch shall be provided at the reel.	$2,606
4405-0036	Booster Reel. Reel to have capacity of 200' of 1" (not included). Includes rewind switch on wall adjacent to reel. Locate rear upper body compartment.	$2,823
4405-0041	Booster Reel. Reel to have capacity of 200' of 1.5" (not included). Locate [#LOC].	$2,797
4405-0042	Booster Reel. Reel to have capacity of 200' of 1.5" (not included). Includes stirrup style rewind switch. Locate rear body compartment.	$2,999
4405-0043	(1) booster reel to hold up to 300' of .75" hose (not included). Includes rollers mounted on reel side of the module and foot mounted rewind switch below the rearward side of the runningboard. Locate [#LOC].	$3,218

4405-0044	Booster Reel. Reel to have capacity of 200' of 1" (not included). Includes rewind switch on officer side wall adjacent to reel. Locate rear body compartment.	$2,823
4405-0045	Booster Reel. Reel to have capacity of 200' of 1" (not included). Locate [#LOC].	$2,623
4405-0046	Booster Reel. Reel to have capacity of 100' of 1" (not included). Includes rewind switch located on bottom of adjustable shelf on far right side corner. Locate rear body compartment offset to officer side as far as possible.	$2,606
4405-0047	Drop down booster reel mounted roller assembly. For use with rear compartment mounted booster reel.	$350
4405-0048	Booster Reel. Reel to have capacity of 200' of 1" (not included). Locate rear body compartment. Includes rewind switch on driver side wall adjacent to reel.	$2,823
4405-0049	Booster Reel. Reel to have capacity of 200' of 1 hose with 1/2hp motor.	$2,904
4405-0051	Booster reel to hold up to 300' of 1" hose (not included) locate on officer side of dunnage storage pan.	$3,218
4405-0052	Hose Reel Dry 300'X1.75 Hose. Locate in storage pan.	$2,355
4405-0054	Hose Reel Dry for 250' X 1.75 Collapsible Hose	$1,770
4405-0055	Booster Reel. Reel to have capacity of 150' of 1" (not included). Locate [#LOC]. Includes body/beavertail mounted rewind switch located to outboard side of reel location.	$2,623
4405-0058	Booster Reel. Reel to have capacity of 150' of 1" (not included). Locate rear body compartment.	$2,623
4405-0060	Booster reel Akron Elect valve with a 9315 controller to read pressure only- Behind Front of Cab. Center between frame rails. To hold 100' of 1"	$6,290
4405-0061	Akron Booster reel - front bumper. Center between frame rails. Will hold 150' of 1" or 250' of 3/4" booster hose.	$6,500
4405-0064	Booster Reel Akron Model ERWB-16=28. Includes stirrup style rewind switch. Locate rear body compartment. "Hose Not Included" Capacity; up to 150' of .75" or 100' of 1" redline.	$2,823
4405-0065	Booster Reel. Reel to have capacity of 200' of 1" with Electric Valve Control (hose not included). Locate rear body compartment.	$3,345
4405-0066	Booster Reel. Reel to have capacity of 150' of 1" (not included). Locate rear body compartment.	$2,623
4405-0077	Booster Hose Reel 12 Volt. Shall hold 200' of .75" Booster Hose (Hose not included) Includes stirrup style rewind switch installed in [#LOC]	$2,624
4405-0078	Booster Reel with 1.5" Air Actuated Valve control at operator panel. Reel to have capacity of 200' of 1" (not included). Locate rear body compartment.	$2,823
4405-0081	Booster Reel. Reel to have capacity of 150' of 1" (not included). Locate officer side of pan.	$2,623
4405-0083	Booster Reel Akron. Reel to have the capacity of 250' of 3/4 of redline. Includes rewind switch locate next to reel. Locate rear body compartment. "Hose Not Included".	$2,572
4405-0085	Booster Reel Riser for rollers. Locate (1) left, and (1) right side on hose reel pan.	$170
4405-0090	Booster Reel with air actuated control at pump operator panel. Shall hold 200' of 1" Booster Hose (Hose not included) installed in [#LOC]	$2,507
4405-0093	Booster Reel. Reel to have capacity of 200' of 1" (not included). Includes rewind switch mounted on the exterior of compartment (rear body) on the officer's side. Locate reel in the rear body compartment.	$2,823
4405-0095	Booster Hose Reel 12 Volt located on the floor of B1. Shall hold 200' of .75" Booster Hose (Hose not included). Includes rewind switch officers side of B1 wall close to opening for easy accessability.	$2,624
4405-0096	The booster reel manual crank shall have the crank handle extended an additional 12" beyond standard length.	$94
4405-0097	Booster Reel Aluminum shall hold 200' of 1" flat lay Hose. installed in [#LOC]. A rewind switch shall be provided at the reel.	$2,606
4405-0098	Booster Reel 100' X 1" or 150' x 0.75" hose (Hose not included), blow out valve included, model EF4026-19-20-8. Located: [#LOC].	$2,619
4405-0100	Booster reel rewind switch. Switch located [#LOC].	$114
4405-0101	Hannay EPFF20-30-31 booster reel. Reel to have capacity of 150' of 1" (not included). Locate pump dunnage offset to officer side. Includes body/beavertail mounted rewind switch located to outboard side of reel location.	$2,623
4405-0104	Booster Reel. Reel to have capacity of 100' of 1" (not included). Includes rewind switch installed in [#LOC] for Dry Chemical.	$2,606
4405-0106	Air actuated 1.5" valve and with pump panel mounted controller. For use with dealer installed booster reel and roller assembly in B1. Includes air blow-out.	$1,238
4405-0107	Booster Reel. Reel to have capacity of 200' of 1" (not included). Includes rewind switch on wall adjacent to reel. Locate rear body compartment.	$2,823
4405-0109	Booster Reel. Reel to have capacity of 300' of .75" (not included). Locate [#LOC].	$2,623
4405-0110	Booster Reel air actuated 1.5" valve with plumbing to terminate in B1 and control at pump operator panel. For use with dealer installed booster reel and roller assembly in B1.	$1,438
4405-0112	Booster Reel. Reel to have capacity of 200' of 1" (not included). Includes rewind switch mounted on the reel. Locate rear body compartment.	$2,823
4405-0113	Booster Hose Reel 12 Volt located dunnage pan offset to officer side. Shall hold 200' of .75" Booster Hose (Hose not included). Includes rewind switch officers side pump panel.	$2,624
4405-0114	Booster Reel air actuated valve. Reel to have capacity of 200' of .75" (not included). Includes rewind switch on officer side wall adjacent to reel. Locate rear body compartment.	$2,823
4405-0115	Booster Reel. Reel to have capacity of 150' of 3/4" or 100' of 1" booster hose. Hose is sold seperately. Location: [#LOC].	$2,624
4405-0117	Booster Reel. Reel to have capacity of 100' of 1" (not included). Reel installed in dunnage pan offset to driver side.	$2,606
4405-0118	Hose Reel Dry for 500" X 1" Forestry Collapsible Hose (REEL MODEL SBEPC28-23-24).	$2,905

4405-0119	Hose Reel 1.5" manual valve with pump panel mounted controller. For use with dealer installed booster reel in dunnage pan officer side area. Connection hose to have extra length so dealer can locate reel on officer side of dunnage pan. (dealer to make final connections to switches).	$1,051
4405-0121	Akron Booster reel - front bumper. Center between frame rails. Will hold 150' of 1" or 250' of 3/4" booster hose. Include painted black Durabak cover and skid plate	$6,500
4405-0123	Booster Reel EF26-23-24-12. Reel to have capacity of 150' of 1" Niedner, or Reeltex (hose not included). Locate driver side of pan.	$2,720
4405-0126	Hose Reel Dry for 500" X 1" Forestry Collapsible Hose (REEL MODEL SBEPC28-23-24). Located: [#LOC].	$2,905
4405-0129	Hose Reel Dry 300' of 1.75" (hose not included). Locate [#LOC].	$2,355
4405-0130	Booster Reel 100' X 1" or 150' x 0.75" hose (Hose not included), blow out valve included, model EF4126-19-20-8. Located: [#LOC].	$2,619
4415-0008	1.5" front bumper discharge Akron manual valve.	$1,519
4415-0009	1.5" Front Bumper Discharge Hale Manual Valve	$1,621
4415-0010	1.5" Front Bumper Discharge Akron Electric Valve	$3,134
4415-0011	2.5" Front Bumper Discharge Akron Electric Valve	$3,287
4415-0012	1.5" crosslay with Akron manual valve. Location: [#LOC].	$946
4415-0014	2.5" Left Pump Panel Discharge Akron Manual Valve. Location: [#LOC].	$985
4415-0015	2.5" Left Panel Discharge Hale Manual Valve. Location: [#LOC]	$1,281
4415-0016	2.5" Right Pump Panel Discharge Akron Manual Valve. Location: [#LOC].	$1,094
4415-0017	2.5" Right Pump Panel Discharge Hale Manual Valve. Location: [#LOC]	$1,389
4415-0018	2.5" left front hose bed discharge Akron manual valve.	$1,424
4415-0019	2.5" Left Front Hosebed Discharge Hale Manual Valve	$1,664
4415-0020	2.5" right front hose bed discharge Akron manual valve.	$1,424
4415-0021	2.5" Right Front Hosebed Discharge Hale Manual Valve	$1,664
4415-0022	2.5" Left Rear Discharge Akron Manual Valve. Location: [#LOC].	$1,152
4415-0023	2.5" Left Rear Discharge Hale Manual Valve Location: [#LOC]	$1,389
4415-0025	2.5" Left Rear Discharge Akron Electric Valve	$1,483
4415-0028	2.5" Right Rear Discharge Akron Manual Valve. Location: [#LOC].	$1,152
4415-0029	2.5" Right Rear Discharge Hale Manual Valve Location: [#LOC]	$1,389
4415-0030	2.5" Right Rear Rearmount Discharge Akron Manual Valve	$1,483
4415-0033	3" Left Pump Panel Top mount Discharge Akron Manual Valve (Waterous pumps noted location to be forward lower port). Location: [#LOC].	$1,685
4415-0034	3" Right Pump Panel Discharge Akron Manual Valve (Waterous pumps noted location to be forward lower port). Location: [#LOC].	$1,582
4415-0035	3" Right Pump Panel Discharge Hale Manual Valve Location: [#LOC]	$1,940
4415-0036	3" Left Front Hose Bed Discharge Akron Manual Valve.	$2,067
4415-0037	3" Right Front Hose Bed Discharge Akron Manual Valve.	$2,067
4415-0038	3" Left Rear Discharge Akron Manual Valve. Location: [#LOC].	$1,778
4415-0039	3" Right Rear Discharge Akron Manual Valve. Location: [#LOC].	$1,778
4415-0041	3" Deck Gun Discharge, Akron manual valve.	$1,615
4415-0049	4" Pump Panel Discharge Hale Electric Valve Location: [#LOC]	$5,578
4415-0050	4" Pump Panel Discharge Akron Electric Valve (Waterous pumps noted location to be forward lower port). [#LOC]	$4,520
4415-0051	4" Waterway Discharge with 3" Akron Manual Valve.	$2,193
4415-0052	4" Waterway Discharge with 4" Akron Electric Valve	$4,520
4415-0053	4" Waterway Discharge with 3" Akron Electric Valve	$3,780
4415-0054	4" Right Pump Panel Discharge with 3" Akron Manual Valve (Waterous pumps noted location to be forward lower port). Location: [#LOC].	$1,861
4415-0055	4" Left Rear Discharge Akron Electric Valve	$4,789
4415-0056	4" Rear Discharge with Akron Electric Valve. Rear Mount application. Locate to [#LOC] of rear steamer.	$4,520
4415-0057	5" Right Pump Panel Discharge with 3" Akron Manual Valve. Location: [#LOC].	$2,580
4415-0058	2.5" Crosslay Akron Manual Valve. Location: [#LOC].	$1,140
4415-0063	1.5" Double Speedlay with Hale Manual Valve for ERV	$2,223
4415-0064	1.5" Double Speedlay with Akron Manual Valve for ERV	$2,223
4415-0065	1.5" Double Speedlay with Akron Manual Valves.	$1,853
4415-0066	1.5" Triple Speedlay with Akron manual valve.	$2,908
4415-0067	1.5" left front hose bed preconnect Akron manual valve.	$985
4415-0068	1.5" right front hose bed preconnect Akron manual valve.	$985
4415-0071	1.5" Left Rear Discharge Akron Manual Valve. Location: [#LOC].	$1,039
4415-0072	1.5" Right Rear Discharge Akron Manual Valve. Location: [#LOC].	$1,039
4415-0073	Triple Speedlay (2) 1.5" and (1) 2.5" with Akron Manual Valve.	$4,150
4415-0075	2.5" Rear Driver's Side Preconnect Akron Manual Valve for Rear Mount	$2,038
4415-0077	Discharge Package (3) 2.5" with Akron Manual Valves and (1) 3" with Akron Manual Valve. For use with rear mounted pump.	$6,834
4415-0078	3" Deck Gun Discharge Akron Electricl Valve Body Front for Rear Mount	$7,364
4415-0079	3" Deck Gun Discharge Akron Manual Valve Body Rear for Rear Mount	$4,028
4415-0085	1.5" Crosslay w/2" Akron Electric Valve Location: [#LOC]	$2,756
4415-0086	2.5" Crosslay w/Akron Electric Valve. To be located rearward of 1.5" crosslay(s) if applicable. Location: [#LOC].	$3,168
4415-0088	1.5" Crosslay w/2" Akron Electric Valve & Navigator 9305 Location: [#LOC]	$5,157
4415-0089	2.5" Crosslay w/Akron Electric Valve & Navigator 9305. To be located rearward of 1.5" crosslay(s) if applicable. Location: [#LOC]	$5,992

4415-0093	Double 1.5" Speedlay w/2" Akron Electric Valves	$5,523
4415-0094	Triple 1.5" Speedlay w/2" Akron Electric Valves	$8,410
4415-0096	Double 1.5" Speedlay w/2" Akron Electric Valves & Navigator 9305	$10,239
4415-0097	Triple 1.5" Speedlay w/2" Akron Electric Valves & Navigator 9305	$15,508
4415-0098	Triple (2) 1.5" & (1) 2.5" Speedlays w/(2) 2" & (1) 2.5" Akron Electric Valves & Navigator 9305	$17,600
4415-0099	3" Deck Gun Discharge Akron Electric Valve	$3,714
4415-0100	3" Deck Gun Discharge Akron Electric Valve & Navigator 9305	$6,612
4415-0102	1.5" Front Bumper Discharge Akron Electric Valve & Navigator 9305	$5,755
4415-0104	2.5" Front Bumper Discharge Akron Electric Valve & Navigator 9315	$6,681
4415-0106	1.5" Left Front Hosebed w/2" Akron Electric Valve	$2,819
4415-0107	2.5" Left Front Hosebed Akron Electric Valve	$3,456
4415-0108	3" Left Front Hosebed Akron Electric Valve	$4,170
4415-0109	1.5" Left Front Hosebed w/2" Akron Electric Valve & Navigator 9305	$5,220
4415-0110	2.5" Left Front Hosebed Akron Electric Valve & Navigator 9305	$6,357
4415-0111	3" Left Front Hosebed Akron Electric Valve & Navigator 9305	$7,066
4415-0115	1.5" Right Front Hosebed w/2" Akron Electric Valve	$2,819
4415-0116	2.5" Right Front Hosebed Akron Electric Valve	$3,456
4415-0117	3" Right Front Hosebed Akron Electric Valve	$4,170
4415-0118	1.5" Right Front Hosebed w/2" Akron Electric Valve & Navigator 9305	$5,220
4415-0119	2.5" Right Front Hosebed Akron Electric Valve & Navigator 9305	$6,357
4415-0120	3" Right Front Hosebed Akron Electric Valve & Navigator 9305	$7,066
4415-0124	2.5" Left Pump Panel Discharge Akron Electric Valve. Location: [#LOC]	$3,017
4415-0125	2.5" Left Pump Panel Discharge Akron Electric Valve & Navigator 9305. Location: [#LOC]	$5,919
4415-0127	2.5" Right Pump Panel Discharge Akron Electric Valve Location: [#LOC]	$3,017
4415-0128	3" Right Pump Panel Discharge Akron Electric Valve (Waterous pumps noted location to be forward lower port) Location: [#LOC]	$3,687
4415-0129	4" Right Pump Panel Discharge w/3" Akron Electric Valve (Waterous pumps noted location to be forward lower port) Location: [#LOC]	$3,965
4415-0130	5" Right Pump Panel Discharge w/3" Akron Electric Valve Location: [#LOC]	$4,682
4415-0131	2.5" Right Pump Panel Discharge Akron Electric Valve & Navigator 9305 Location: [#LOC]	$5,919
4415-0132	3" Right Pump Panel Discharge Akron Electric Valve & Navigator 9305 (Waterous pumps noted location to be forward lower port) Location: [#LOC]	$6,578
4415-0133	4" Pump Panel Discharge Akron Electric Valve & Navigator 9305 Location: [#LOC]	$7,982
4415-0134	4" Right Pump Panel Discharge w/3" Akron Electric Valve & Navigator 9305 Location: [#LOC]	$6,857
4415-0135	5" Right Pump Panel Discharge w/3" Akron Electric Valve & Navigator 9305 Location: [#LOC]	$7,576
4415-0140	1.5" Left Rear Discharge Akron Electric Valve Location: [#LOC]	$2,874
4415-0141	2.5" Left Rear Discharge Akron Electric Valve Location: [#LOC]	$3,185
4415-0142	3" Left Rear Discharge Akron Electric Valve Location: [#LOC]	$3,881
4415-0143	1.5" Left Rear Discharge Akron Electric Valve & Navigator 9305 Location: [#LOC]	$5,275
4415-0144	2.5" Left Rear Discharge Akron Electric Valve & Navigator 9305 Location: [#LOC]	$6,084
4415-0145	3" Left Rear Discharge Akron Electric Valve & Navigator 9305 Location: [#LOC]	$6,776
4415-0149	1.5" Right Rear Discharge Akron Electric Valve Location: [#LOC]	$2,874
4415-0150	2.5" Right Rear Discharge Akron Electric Valve Location: [#LOC]	$3,185
4415-0151	3" Right Rear Dicharge Akron Electric Valve Location: [#LOC]	$3,881
4415-0152	1.5" Right Rear Discharge Akron Electric Valve & Navigator 9305 Location: [#LOC]	$5,275
4415-0153	2.5" Right Rear Discharge Akron Electric Valve & Navigator 9305 Location: [#LOC]	$6,084
4415-0154	3" Right Rear Discharge Akron Electric Valve & Navigator 9305 Location: [#LOC]	$6,776
4415-0158	3" Left Panel Discharge Top Mount Akron Manual Valve w/30 Degree Droop. (Waterous pumps noted location to be forward lower port.) Location: [#LOC].	$1,993
4415-0159	3" Left Panel Discharge Top Mount Akron Electric Valve (Waterous pumps noted location to be forward lower port) Location: [#LOC]	$3,788
4415-0160	3" Left Panel Discharge Top Mount Akron Electric Valve w/30 Degree Chrome Droop (Waterous pumps noted location to be forward lower port) Location: [#LOC]	$4,097
4415-0161	2.5" Left Panel Discharge Akron Manual Valve w/30 Degree Chrome Droop. Location: [#LOC].	$1,237
4415-0162	2.5" Left Panel Discharge Akron Electric Valve w/30 Degree Chrome Droop. Location: [#LOC].	$3,271
4415-0163	2.5" Left Panel Dishcarge Akron Electric Valve & Navigator 9305 w/30 Degree Droop Location: [#LOC]	$6,172
4415-0164	2.5" Right Panel Discharge Akron Manual Valve w/30 Degree Chrome Droop. Location: [#LOC].	$1,237
4415-0165	3" Right Panel Discharge Akron Manual Valve w/30 Degree Chrome Droop. (Waterous pumps noted if location is forward of steamer use lower discharge port.) Location: [#LOC].	$1,890
4415-0166	2.5" Right Panel Discharge Akron Electric Valve w/30 Degree Chrome Droop Location: [#LOC]	$3,271
4415-0167	3" Right Panel Discharge Akron Electric Valve w/30 Degree Chrome Droop (Waterous pumps noted location to be forward lower port) Location: [#LOC]	$3,993
4415-0168	2.5" Right Panel Discharge Akron Electric Valve & Navigator 9305 w/30 Degree Droop Location: [#LOC]	$6,172
4415-0169	3" Right Panel Discharge Akron Electric Valve & Navigator 9305 w/30 Degree Droop (Waterous pumps noted location to be forward lower port) Location: [#LOC]	$6,887
4415-0172	2.5" Auxillary Waterway Discharge Akron Manual Valve. Plumbed from foam manifold and "Y" into w/way pipe downstream from main w/way discharge valve.	$1,108
4415-0179	2.5" Auxiliary Deck Gun Discharge Akron Valve for use with CAFS System.Plumbed from foam manifold and "Y" into Deck Gun pipe downstream from main Deck Gun discharge valve.	$1,917
4415-0184	3" Deck Gun Discharge Hale Manual Valve	$1,812
4415-0185	3" Left Panel Discharge w/Akron Electric Valve & 9305 Navigator for Top Mount Module (Waterous pumps noted location to be forward lower port) Location: [#LOC]	$6,683

4415-0186	3" Left Panel Discharge w/Akron Electric Valve & 9305 Navigator for Top Mount Module (Waterous pumps noted location to be forward lower port) Location: [#LOC]	$6,992
4415-0187	1.5" Crosslay with Hale Manual Valve Location: [#LOC]	$1,821
4415-0189	2.5" Crosslay with Hale Manual Valve Location: [#LOC]	$2,455
4415-0190	Double 1.5" Speedlay with Hale Manual Valve	$2,282
4415-0191	Triple 1.5" Speedlay with Hale Manual Valve	$3,550
4415-0193	Triple Speedlay (2) 1.5" and (1) 2.5" with Hale Manual Valves	$5,077
4415-0194	2.5" front bumper discharge Akron manual valve.	$1,746
4415-0195	4" Right Pump Panel Discharge with 3" Hale Manual Valve Location: [#LOC]	$2,221
4415-0196	5" Right Pump Panel Discharge with 3" Hale Manual Valve Location: [#LOC]	$2,943
4415-0197	2.5" Left Panel Discharge Hale Manual Valve with Droop. Location: [#LOC]	$1,533
4415-0198	2.5" Right Pump Panel Discharge Hale Manual Valve with droop. Location: [#LOC]	$1,639
4415-0199	3" Right Pump Panel Discharge Hale Manual Valve with Droop Location: [#LOC]	$2,242
4415-0200	1.5" Left Panel Discharge Akron Valve	$985
4415-0201	1.5" Right Panel Discharge Akron Valve.	$985
4415-0204	1.5" Crosslay with Hale Electric Valve Location: [#LOC]	$3,282
4415-0205	2.5" Crosslay with Hale Electric Valve Location: [#LOC]	$4,048
4415-0206	Double 1.5" Speedlay with Hale Electric Valve	$5,205
4415-0207	Triple 1.5" Speedlay with Hale Electric Valve	$7,934
4415-0208	Triple Speedlay (2) 1.5" and (1) 2.5" with Hale Electric Valves	$9,591
4415-0209	3" Deck Gun Discharge Hale Electric Valve	$3,999
4415-0210	2.5" Auxiliary Deck Gun Discharge Hale Valve for use with CAFS System	$4,103
4415-0211	2.5" Front Bumper Discharge Hale Manual Valve	$1,798
4415-0212	1.5" Front Bumper Discharge Hale Electric Valve	$3,082
4415-0213	2.5" Front Bumper Discharge Hale Electric Valve	$3,391
4415-0214	1.5" Left Front Hosebed Discharge Hale Manual Valve	$1,126
4415-0215	3" Left Front Hosebed Discharge Hale Manual Valve	$2,265
4415-0216	1.5" Left Front Hosebed Discharge Hale Electric Valve	$2,587
4415-0217	2.5" Left Front Hosebed Discharge Hale Electric Valve	$3,256
4415-0218	3" Left Front Hosebed Discharge Hale Electricl Valve	$4,451
4415-0219	1.5" Right Front Hosebed Discharge Hale Manual Valve	$1,126
4415-0220	3" Right Front Hosebed Discharge Hale Manual Valve	$2,265
4415-0221	1.5" Right Front Hosebed Discharge Hale Electric Valve	$2,587
4415-0222	2.5" Right Front Hosebed Discharge Hale Electric Valve	$3,256
4415-0223	3" Right Front Hosebed Discharge Hale Electric Valve	$4,451
4415-0224	1.5" Left Panel Discharge Hale Valve	$1,086
4415-0225	3" Left Pump Panel Top mount Discharge Hale Manual Valve Location: [#LOC]	$1,884
4415-0226	3" Left Pump Panel Top mount Discharge with 30 deg Droop Hale Manual Valve Location: [#LOC]	$2,185
4415-0227	2.5" Left Panel Discharge Hale Electric Valve. Location: [#LOC]	$2,873
4415-0228	2.5" Left Panel Discharge Hale Electric Valve with Droop. Location: [#LOC]	$3,123
4415-0229	3" Left Pump Panel Top mount Discharge Hale Electric Valve Location: [#LOC]	$4,070
4415-0230	3" Left Pump Panel Top mount Discharge with 30 deg Droop Hale Electric Valve Location: [#LOC]	$4,371
4415-0231	1.5" Right Panel Discharge Hale Valve	$1,086
4415-0232	2.5" Right Pump Panel Discharge Hale Electric Valve. Location: [#LOC]	$2,982
4415-0233	2.5" Right Pump Panel Discharge Hale Electric Valve with droop. Location: [#LOC]	$3,232
4415-0234	3" Right Pump Panel Discharge Hale Electric Valve Location: [#LOC]	$4,128
4415-0235	3" Right Pump Panel Discharge Hale Electric Valve with Droop Location: [#LOC]	$4,429
4415-0236	4" Right Pump Panel Discharge with 3" Hale Electric Valve Location: [#LOC]	$4,407
4415-0237	5" Right Pump Panel Discharge with 3" Hale Electric Valve Location: [#LOC]	$5,128
4415-0238	1.5" Left Rear Discharge Hale Manual Valve Location: [#LOC]	$1,142
4415-0239	3" Left Rear Discharge Hale Manual Valve Location: [#LOC]	$1,976
4415-0240	1.5" Left Rear Discharge Hale Electric Valve Location: [#LOC]	$2,604
4415-0241	2.5" Left Rear Discharge Hale Electric Valve Location: [#LOC]	$2,982
4415-0242	3" Left Rear Discharge Hale Electric Valve Location: [#LOC]	$4,163
4415-0243	1.5" Right Rear Discharge Hale Manual Valve Location: [#LOC]	$1,142
4415-0244	3" Right Rear Discharge Hale Manual Valve Location: [#LOC]	$1,976
4415-0245	1.5" Right Rear Discharge Hale Electric Valve Location: [#LOC]	$2,604
4415-0246	2.5" Right Rear Discharge Hale Electric Valve Location: [#LOC]	$2,982
4415-0247	3" Right Rear Discharge Hale Electric Valve Location: [#LOC]	$4,163
4415-0248	1.5" Crosslay Elkhart Manual Valve Location: [#LOC].	$999
4415-0249	2.5" Crosslay Elkhart Manual Valve. To be located rearward of 1.5" crosslay(s) if applicable. Location: [#LOC]	$1,284
4415-0250	1.5" Crosslay w/2" Elkhart Electric Valve Location: [#LOC]	$2,210
4415-0251	2.5" Crosslay w/Elkhart Electric Valve. To be located rearward of 1.5" crosslay(s) if applicable. Location: [#LOC]	$2,698
4415-0252	1.5" Double Speedlay with Elkhart Manual Valves	$2,007
4415-0253	SPDLY TRPL 1.5" ELKHART VLV	$3,139
4415-0254	Triple Speedlay (2) 1.5" and (1) 2.5" with Elkhart Manual Valves	$4,734
4415-0255	Double 1.5" Speedlay w/2" Elkhart Electric Valves	$4,424
4415-0256	Triple 1.5" Speedlay w/2" Elkhart Electric Valves	$6,763
4415-0257	Triple (2) 1.5" & (1) 2.5" Speedlay w/(2) 2" & (1) 2.5" Elkhart Electric Valves	$8,563
4415-0265	3" Deck Gun Discharge Elkhart Manual Valve w/RC-10 Controller.	$1,826

4415-0266	3" Deck Gun Discharge Elkhart Electric Valve	$3,216
4415-0267	2.5" Auxiliary Deck Gun Discharge Elkhart Valve for use with CAFS System	$2,063
4415-0268	1.5" Front Bumper Discharge Elkhart Manual Valve	$1,597
4415-0269	2.5" Front Bumper Discharge Elkhart Manual Valve	$1,892
4415-0270	1.5" Front Bumper Discharge Elkhart Electric Valve	$2,805
4415-0271	2.5" Front Bumper Discharge Elkhart Unibody Electric Valve	$3,306
4415-0272	1.5" Left Front Hosebed Preconnect Elkhart Manual Valve	$1,062
4415-0273	2.5" Left Front Hosebed Discharge Elkhart Manual Valve	$1,569
4415-0274	3" Left Front Hosebed Discharge Elkhart Manual Valve	$2,281
4415-0275	1.5" Left Front Hosebed w/2" Elkhart Electric Valve	$2,271
4415-0276	2.5" Left Front Hosebed Elkhart Electric Valve	$2,982
4415-0277	3" Left Front Hosebed Elkhart Electric Valve	$3,669
4415-0278	1.5" Right Front Hosebed Preconnect Elkhart Manual Valve	$1,062
4415-0279	2.5" Right Front Hosebed Discharge Elkhart Manual Valve	$1,569
4415-0280	3" Right Front Hosebed Discharge Elkhart Manual Valve	$2,281
4415-0281	1.5" Right Front Hosebed w/2" Elkhart Electric Valve	$2,271
4415-0282	2.5" Right Front Hosebed Elkhart Electric Valve	$2,982
4415-0283	3" Right Front Hosebed Elkhart Electric Valve	$3,669
4415-0284	1.5" Left Panel Discharge Elkhart Valve	$1,062
4415-0285	4" Pump Panel Discharge Elkhart Electric Valve (Waterous pumps noted location to be forward lower port) Location: [#LOC].	$4,715
4415-0286	5" Pump Panel Discharge with 4" Akron Electric Valve Location: [#LOC]	$5,152
4415-0287	5" Pump Panel Discharge with 4" Hale Electric Valve Location: [#LOC]	$6,172
4415-0288	5" Pump Panel Discharge with 4" Elkhart Electric Valve Location: [#LOC]	$5,348
4415-0289	2.5" Left Pump Panel Discharge Elkhart Manual Valve. Location: [#LOC]	$1,131
4415-0290	2.5" Left Panel Discharge Elkhart Manual Valve w/45 Degree Droop. Location: [#LOC].	$1,384
4415-0291	3" Left Pump Panel Top mount Discharge Elkhart Manual Valve Location: [#LOC]	$1,899
4415-0292	2.5" Left Pump Panel Discharge Elkhart Electric Valve. Location: [#LOC]	$2,546
4415-0293	2.5" Left Panel Discharge Elkhart Electric Valve w/45 Degree Droop Location: [#LOC]	$2,797
4415-0294	3" Left Panel Discharge Top Mount Elkhart Electric Valve Location: [#LOC]	$3,288
4415-0295	4" Left Pump Panel Discharge with 3" Akron Manual Valve Top Mount Controlled. (Waterous pumps noted location to be forward lower port.) Location: [#LOC].	$1,861
4415-0296	4" Left Pump Panel Discharge with 3" Hale Manual Valve Top Mount Controlled Location: [#LOC]	$2,220
4415-0297	4" Left Pump Panel Discharge with 3" Elkhart Manual Valve Top Mount Controlled (Waterous pumps noted location to be forward lower port) Location: [#LOC]	$2,073
4415-0298	1.5" Right Panel Discharge Elkhart Valve	$1,062
4415-0299	2.5" Right Pump Panel Discharge Elkhart Manual Valve. Location: [#LOC].	$1,237
4415-0300	2.5" Right Panel Discharge Elkhart Manual Valve w/45 Degree Droop. Location: [#LOC].	$1,384
4415-0301	3" Right Pump Panel Discharge Elkhart Manual Valve Location: [#LOC]	$1,795
4415-0302	4" Right Pump Panel Discharge with 3" Elkhart Manual Valve w/RC-10 Control w/lights. Location: [#LOC].	$2,073
4415-0303	5" Right Pump Panel Discharge with 3" Elkhart Manual Valve Location: [#LOC]	$2,793
4415-0304	2.5" Right Pump Panel Discharge Elkhart Electric Valve Location: [#LOC]	$2,653
4415-0305	2.5" Right Panel Discharge Elkhart Electric Valve w/45 Degree Droop Location: [#LOC]	$2,797
4415-0306	3" Right Pump Panel Discharge Elkhart Electric Valve Location: [#LOC]	$3,186
4415-0307	4" Right Pump Panel Discharge w/3" Elkhart Electric Valve (Waterous pumps noted location to be forward lower port) Location: [#LOC]	$3,465
4415-0308	5" Right Pump Panel Discharge w/3" Elkhart Electric Valve Location: [#LOC]	$4,182
4415-0309	1.5" Left Rear Discharge Elkhart Manual Valve Location: [#LOC]	$1,116
4415-0310	2.5" Left Rear Discharge Elkhart Manual Valve. Location: [#LOC].	$1,297
4415-0311	3" Left Rear Discharge Elkhart Manual Valve Location: [#LOC]	$1,991
4415-0312	1.5" Left Rear Discharge Elkhart Electric Valve Location: [#LOC]	$2,326
4415-0313	2.5" Left Rear Discharge Elkhart Electric Valve Location: [#LOC]	$2,709
4415-0314	3" Left Rear Discharge Elkhart Electric Valve Location: [#LOC]	$3,381
4415-0315	1.5" Right Rear Discharge Elkhart Manual Valve Location: [#LOC]	$1,116
4415-0316	2.5" Right Rear Discharge Elkhart Manual Valve. Location: [#LOC].	$1,297
4415-0317	3" Right Rear Discharge Elkhart Manual Valve Location: [#LOC]	$1,991
4415-0318	1.5" Right Rear Discharge Elkhart Electric Valve Location: [#LOC]	$2,326
4415-0319	2.5" Right Rear Discharge Elkhart Electric Valve Location: [#LOC]	$2,709
4415-0320	3" Right Rear Dicharge Elkhart Electric Valve Location: [#LOC]	$3,381
4415-0322	Second Left Front Hosebed Discharge 1.5" w/2" Akron Manual Valve	$985
4415-0323	Second left front hose bed discharge 2.5" Akron manual valve.	$1,424
4415-0324	Second Left Front Hosebed Discharge 2.5" Hale Manual Valve	$1,664
4415-0325	Second Left Front Hose Bed Discharge 3" Akron Manual Valve.	$2,067
4415-0326	Second Left Front Hosebed 1.5" w/2" Akron Electric Valve	$2,819
4415-0327	Second Left Front Hosebed 2.5" Akron Electric Valve	$3,456
4415-0328	Second Left Front Hosebed 3" Akron Electric Valve	$4,170
4415-0329	Second Left Front Hosebed 1.5" w/2" Akron Electric Valve & Navigator 9305	$5,220
4415-0330	Second Left Front Hosebed 2.5" Akron Electric Valve & Navigator 9305	$6,357
4415-0331	Second Left Front Hosebed 3" Akron Electric Valve & Navigator 9305	$7,066
4415-0335	Second Left Front Hosebed Discharge 1.5" Hale Manual Valve	$1,126
4415-0336	Second Left Front Hosebed Discharge 3" Hale Manual Valve	$2,265
4415-0337	Second Left Front Hosebed Discharge 1.5" Hale Electric Valve	$2,587
4415-0338	Second Left Front Hosebed Discharge 2.5" Hale Electric Valve	$3,256

4415-0339	Second Left Front Hosebed Discharge 3" Hale Electricl Valve	$4,451
4415-0340	Second Left Front Hosebed Preconnect 1.5" Elkhart Manual Valve	$1,062
4415-0341	Second Left Front Hosebed Discharge 2.5" Elkhart Manual Valve	$1,569
4415-0342	Second Left Front Hosebed Discharge 3" Elkhart Manual Valve	$2,281
4415-0343	Second Left Front Hosebed 1.5" w/2" Elkhart Electric Valve	$2,271
4415-0344	Second Left Front Hosebed 2.5" Elkhart Electric Valve	$2,982
4415-0345	Second Left Front Hosebed 3" Elkhart Electric Valve	$3,669
4415-0346	Second Right Front Hose Bed Preconnect 1.5" With 2" Akron Manual Valve.	$985
4415-0347	Second Right Front Hose Bed Discharge 2.5" Akron Manual Valve.	$1,424
4415-0348	Second Right Front Hosebed Discharge 2.5" Hale Manual Valve	$1,664
4415-0349	Second Right Front Hosebed Discharge 3" Akron Manual Valve	$2,067
4415-0350	Second Right Front Hosebed 1.5" w/2" Akron Electric Valve	$2,819
4415-0351	Second Right Front Hosebed 2.5" Akron Electric Valve	$3,456
4415-0352	Second Right Front Hosebed 3" Akron Electric Valve	$4,170
4415-0353	Second Right Front Hosebed 1.5" w/2" Akron Electric Valve & Navigator 9305	$5,220
4415-0354	Second Right Front Hosebed 2.5" Akron Electric Valve & Navigator 9305	$6,357
4415-0355	Second Right Front Hosebed 3" Akron Electric Valve & Navigator 9305	$7,066
4415-0359	Second Right Front Hosebed 1.5" Discharge Hale Manual Valve	$1,126
4415-0360	Second Right Front Hosebed Discharge 3" Hale Manual Valve	$2,265
4415-0361	Second Right Front Hosebed Discharge 1.5" w/2" Hale Electric Valve	$2,587
4415-0362	Second Right Front Hosebed Discharge 2.5" Hale Electric Valve	$3,256
4415-0363	Second Right Front Hosebed Discharge 3" Hale Electric Valve	$4,451
4415-0364	Second Right Front Hosebed Preconnect 1.5" Elkhart Manual Valve	$1,062
4415-0365	Second Right Front Hosebed Discharge 2.5" Elkhart Manual Valve	$1,569
4415-0366	Second Right Front Hosebed Discharge 3" Elkhart Unibody Manual Valve and shall terminate with a 3"FNPT X 2.5"MNST adapter.	$2,281
4415-0367	Second Right Front Hosebed 1.5" w/2" Elkhart Electric Valve	$2,271
4415-0368	Second Right Front Hosebed 2.5" Elkhart Electric Valve	$2,982
4415-0369	Second Right Front Hosebed 3" Elkhart Electric Valve	$3,669
4415-0370	Second 1.5" Front Bumper Discharge Akron Manual Valve.	$1,519
4415-0371	Second 1.5" Front Bumper Discharge Hale Manual Valve	$1,621
4415-0372	Second 1.5" Front Bumper Discharge Akron Electric Valve	$3,134
4415-0373	Second 2.5" Front Bumper Discharge Akron Electric Valve	$3,287
4415-0374	Second 1.5" Front Bumper Discharge Akron Electric Valve & Navigator 9305	$5,755
4415-0376	Second 2.5" Front Bumper Discharge Akron Electric Valve & Navigator 9305	$6,681
4415-0378	Second 2.5" Front Bumper Discharge Akron Manual Valve	$1,746
4415-0379	Second 2.5" Front Bumper Discharge Hale Manual Valve	$1,798
4415-0380	Second 1.5" Front Bumper Discharge Hale Electric Valve	$3,082
4415-0381	Second 2.5" Front Bumper Discharge Hale Electric Valve	$3,391
4415-0382	Second 1.5" Front Bumper Discharge Elkhart Manual Valve	$1,597
4415-0383	Second 2.5" Front Bumper Discharge Elkhart Manual Valve	$1,892
4415-0384	Second 1.5" Front Bumper Discharge Elkhart Electric Valve	$2,805
4415-0385	Second 2.5" Front Bumper Discharge Elkhart Electric Valve	$3,306
4415-0386	4" Right Rear Discharge 4" Akron Electric Valve.	$5,027
4415-0387	4" Left Rear Discharge Hale Electric Valve	$5,781
4415-0388	4" Left Rear Discharge Elkhart Electric Valve	$4,981
4415-0389	4" Right Rear Discharge Hale Electric Valve	$6,016
4415-0390	4" Right Rear Discharge Elkhart Electric Valve	$5,219
4415-0391	4" Deck Gun Discharge Akron Electric Valve.	$5,365
4415-0392	4" Deck Gun Discharge Hale Electric Valve	$6,353
4415-0393	4" Deck Gun Discharge Elkhart Electric Valve	$5,555
4415-0397	4" Officer side discharge. Foward of steamer and includes 30 degree droop, 4" Akron full flow valve with 4" driver side hand wheel control.	$3,719
4415-0399	1.5" Crosslay w/2" Akron Valve Handwheel Control Location: [#LOC]	$1,950
4415-0400	1.5" Crosslay w/2" Elkhart Unibody Valve Handwheel Control Location: [#LOC]	$1,999
4415-0401	2.5" Crosslay w/Akron Valve Handwheel Control. To be located rearward of 1.5" crosslay(s) if applicable. Location: [#LOC]	$2,142
4415-0402	2.5" Crosslay w/Elkhart Unibody Valve Handwheel Control. To be located rearward of 1.5" crosslay(s) if applicable. Location: [#LOC]	$2,190
4415-0403	3" Deck Gun Discharge Akron Valve Handwheel Control.	$2,617
4415-0404	3" Deck Gun Discharge Elkhart Valve Handwheel Control	$2,667
4415-0405	1.5" Front Bumper Discharge Akron Valve Handwheel Control	$2,524
4415-0406	1.5" Front Bumper Discharge Elkhart Unibody Valve Handwheel Control	$2,572
4415-0407	2.5" Front Bumper Discharge Akron Valve Handwheel Control	$2,750
4415-0408	2.5" Front Bumper Discharge Elkhart Valve Handwheel Control	$2,798
4415-0409	1.5" Left Front Hosebed Preconnect AkronValve Handwheel Control	$1,988
4415-0410	1.5" Left Front Hosebed Preconnect Elkhart Valve Handwheel Control	$2,038
4415-0411	2.5" Left Front Hosebed Discharge Akron Valve Handwheel Control	$2,427
4415-0412	2.5" Left Front Hosebed Discharge Elkhart Valve Handwheel Control	$2,475
4415-0413	3" Left Front Hosebed Discharge Akron Valve Handwheel Control	$3,071
4415-0414	3" Left Front Hosebed Discharge Elkhart Valve Handwheel Control	$3,119
4415-0415	1.5" Right Front Hosebed Preconnect Akron Valve Handwheel Control	$1,988
4415-0416	1.5" Right Front Hosebed Preconnect Elkhart Valve Handwheel Control	$2,038
4415-0417	2.5" Right Front Hosebed Discharge Akron Valve Handwheel Control	$2,427

4415-0418	2.5" Right Front Hosebed Discharge Elkhart Valve Handwheel Control	$2,475
4415-0419	3" Right Front Hosebed Discharge Akron Valve Handwheel Control	$3,071
4415-0420	3" Right Front Hosebed Discharge Elkhart Valve Handwheel Control	$3,119
4415-0421	4" Pump Panel Discharge Akron Valve Handwheel Control. (Waterous pumps noted location to be forward lower port.) Location: [#LOC].	$3,781
4415-0422	4" Pump Panel Discharge Akron Valve Handwheel Control. (Waterous pumps noted location to be forward lower port.) Location: [#LOC].	$3,781
4415-0423	5" Right Pump Panel Discharge with 4" Akron Valve Handwheel Control	$4,415
4415-0424	5" Right Pump Panel Discharge with 4" Elkhart Valve Handwheel Control	$4,488
4415-0425	2.5" Right Pump Panel Discharge Akron Valve Handwheel Control. Location: [#LOC]	$2,098
4415-0426	2.5" Right Pump Panel Discharge Elkhart Valve Handwheel Control. Location: [#LOC]	$2,145
4415-0427	2.5" Right Panel Discharge Akron Valve Handwheel Control w/30 Degree Droop Location: [#LOC]	$2,241
4415-0428	2.5" Right Panel Discharge Elkhart Valve Handwheel Control w/30 Degree Droop Location: [#LOC]	$2,291
4415-0429	3" Right Pump Panel Discharge Akron Valve Handwheel Control (Waterous pumps noted location to be forward lower port). Location: [#LOC].	$2,586
4415-0430	3" Right Pump Panel Discharge Elkhart Valve Handwheel Control Location: [#LOC]	$2,634
4415-0431	3" Right Panel Discharge Akron Valve Handwheel Control w/Droop. Location:(Waterous pumps noted location to be forward lower port) [#LOC].	$2,894
4415-0432	4" Right Panel Discharge w/3" Akron Valve Handwheel Control. Location: [#LOC].	$2,865
4415-0433	4" Right Panel Dischargew/3" Elkhart Unibody Valve Handwheel Control Location: [#LOC]	$2,914
4415-0434	5" Right Pump Panel Discharge with 3" Akron Valve Handwheel Control Location: [#LOC]	$3,583
4415-0435	5" Right Pump Panel Discharge with 3" Elkhart Valve Handwheel Control Location: [#LOC]	$3,632
4415-0436	1.5" Left Rear Discharge Akron Valve Handwheel Control Location: [#LOC]	$2,043
4415-0437	1.5" Left Rear Discharge Elkhart Valve Handwheel Control Location: [#LOC]	$2,091
4415-0438	2.5" Left Rear Discharge Akron Valve Handwheel Control Location: [#LOC]	$2,155
4415-0439	2.5" Left Rear Discharge Elkhart Unibody Valve Handwheel Control Location: [#LOC]	$2,202
4415-0440	3" Left Rear Discharge Akron Valve Handwheel Control Location: [#LOC]	$2,783
4415-0441	3" Left Rear Discharge Elkhart Valve Handwheel Control Location: [#LOC]	$2,830
4415-0442	4" Left Rear Discharge Akron Valve Handwheel Control	$4,051
4415-0443	1.5" Right Rear Discharge Akron Valve Handwheel Control Location: [#LOC]	$2,043
4415-0444	1.5" Right Rear Discharge Elkhart Valve Handwheel Control Location: [#LOC]	$2,091
4415-0445	2.5" Right Rear Discharge Akron Valve Handwheel Control Location: [#LOC]	$2,155
4415-0446	2.5" Right Rear Discharge Elkhart Unibody Valve Handwheel Control Location: [#LOC]	$2,202
4415-0447	3" Right Rear Discharge Akron Valve Handwheel Control Location: [#LOC]	$2,783
4415-0448	3" Right Rear Discharge Elkhart Valve Handwheel Control Location: [#LOC]	$2,830
4415-0449	4" Right Rear Discharge Akron Valve Handwheel Control	$4,288
4415-0455	Second 1.5" Front Bumper Discharge Akron Valve Handwheel Control	$2,524
4415-0456	Second 1.5" Front Bumper Discharge Elkhart Valve Handwheel Control	$2,572
4415-0457	Second 2.5" Front Bumper Discharge Akron Valve Handwheel Control	$2,750
4415-0458	Second 2.5" Front Bumper Discharge Elkhart Valve Handwheel Control	$2,798
4415-0459	Second Left Front Hosebed Discharge 1.5" w/2" Akron Valve Handwheel Control	$1,988
4415-0460	Second Left Front Hosebed Discharge 1.5" w/2" Elkhart Valve Handwheel Control	$2,038
4415-0461	Second Left Front Hosebed Discharge 2.5" Akron Valve Handwheel Control	$2,427
4415-0462	Left Front Hosebed Discharge 2.5" Elkhart Unibody Valve Handwheel Control	$2,475
4415-0463	Second Left Front Hosebed Discharge 3" Akron Valve Handwheel Control	$3,071
4415-0464	Second Left Front Hosebed Discharge 3" Elkhart Valve Handwheel Control	$3,119
4415-0465	Second Right Front Hosebed Preconnect 1.5" Akron Valve Handwheel Control	$1,988
4415-0466	Second Right Front Hosebed Preconnect 1.5" Elkhart Valve Handwheel Control	$2,038
4415-0467	Second Right Front Hosebed Discharge 2.5" Akron Valve Handwheel Control	$2,427
4415-0468	Second Right Front Hosebed Discharge 2.5" Elkhart Valve Handwheel Control	$2,475
4415-0469	Second Right Front Hosebed Discharge 3" Akron Valve Handwheel Control	$3,071
4415-0470	Second Right Front Hosebed Discharge 3" Elkhart Valve Handwheel Control	$3,119
4415-0471	1.5" Left Discharge Akron Valve in Running Board Hose Tray, [#LOC].	$985
4415-0472	1.5" Left Discharge Hale Valve in Runningboard Hose Tray, [#LOC].	$1,086
4415-0473	1.5" Left Discharge Elkhart Valve in Runningboard Hose Tray, [#LOC].	$1,062
4415-0474	1.5" Right Discharge Akron Valve in Runningboard Hose Tray, [#LOC].	$985
4415-0475	1.5" Right Discharge Hale Valve in Runningboard Hose Tray, [#LOC].	$1,086
4415-0476	1.5" Right Discharge Elkhart Valve in Runningboard Hose Tray, [#LOC].	$1,062
4415-0477	4" Left Rear Discharge Elkhart Valve Handwheel Control	$4,126
4415-0478	4" Right Rear Discharge Elkhart Valve Handwheel Control	$4,363
4415-0484	2.5" Quad Speedlay with Akron Manual Valves.	$4,548
4415-0486	Third Left Front Hosebed Discharge 2.5" Akron Manual Valve.	$1,424
4415-0487	2.5" Discharge Package Montreal. Includes (8) discharges- (4) each side with droop.	$13,654
4415-0488	4" officer rear discharge with 3" valve. Includes 4" FNPT x 4" MNST chrome adaptor with cap (ship loose).	$3,094
4415-0491	2.5" Left Panel Discharge Elkhart Manual UnibodyValve w/30 Degree Chrome Droop. Location: [#LOC].	$1,354
4415-0492	2.5" Right Panel Discharge Elkhart Manual UnibodyValve w/30 Degree Chrome Droop. Location: [#LOC].	$1,379
4415-0493	1.5" Crosslay w/2" Elkhart Unibody Manual Valve. Location: [#LOC].	$999
4415-0494	1.5" Crosslay w/2" Elkhart Unibody Electric Valve UBEC3 to read flow, and pressure. Location: [#LOC]	$4,854

4415-0495	2.5" Right Panel Discharge Elkhart Hand Wheel Control UnibodyValve w/30 Degree Chrome Droop Location: [#LOC]	$2,218
4415-0496	3" Deck Gun Discharge Elkhart Unibody Valve Handwheel Control	$2,574
4415-0497	4" Pump Discharge Elkhart Electric UBEC3 Valve to read flow, and pressure. Location: [#LOC]	$6,334
4415-0498	1.5" Right Rear Discharge Elkhart Electric UBEC3 Valve to read flow, and pressure. Location: [#LOC]	$4,708
4415-0499	2.5" Right Rear Discharge Elkhart Electric UBEC3 Valve to read flow, and pressure. Location: [#LOC]	$5,471
4415-0500	1.5" Front Bumper Discharge Elkhart Electric UBEC3 Valve to read flow, and pressure.	$4,992
4415-0502	1.5" Front Bumper Discharge Akron Manual Valve without Blowout	$1,519
4415-0504	2.5" Right Panel Discharge Elkhart Manual UnibodyValve Location: [#LOC]	$1,263
4415-0505	2.5" Left Panel Discharge Elkhart Manual UnibodyValve Location: [#LOC]	$1,236
4415-0506	2.5" Right Panel Discharge Elkhart Hand Wheel Control UnibodyValve Location: [#LOC]	$2,104
4415-0507	4" Officer side discharge. Foward of steamer. Includes 30 degree droop. Hand Wheel Control on operator panel.	$4,439
4415-0508	1.5" preconnect discharge with Akron Electric Valve. For use on rear mounted pumps only. Locate [#LOC].	$3,134
4415-0510	1.5"/2.5" Double Speedlay with Akron Manual Valves Lower 1.75 speedlay and upper 2.5 speedlay.	$2,261
4415-0511	1.5" Right Panel Discharge Akron Valve Hand Wheel Control	$2,188
4415-0512	2.5" preconnect discharge with Akron Electric Valve. For use on rear mounted pumps only. Locate [#LOC].	$4,181
4415-0514	4" Officer side discharge. Foward of steamer and includes 30 degree droop, 4" Elkhart Elect Control full flow valve.	$4,884
4415-0515	Front jumpline swivel to be recess so WYE valve will clear rise lid and tray.	$161
4415-0516	4" Right Panel Discharge w/ 3" Akron Valve Handwheel Control w/Droop Location: [#LOC]	$3,181
4415-0517	4" Right Pump Panel Discharge with 3" Akron Manual Valve w/Droop. Location: [#LOC].	$2,170
4415-0518	4" Right Panel Discharge w/ 3" Akron Valve Electric w/Droop (Waterous pumps noted location to be forward lower port) Location: [#LOC]	$4,273
4415-0519	4" Right Pump Panel Discharge w/3" Akron Electric Valve & Navigator 9305 with 30 Degree Droop Location: [#LOC]	$7,167
4415-0520	4" Right Pump Panel Discharge with 3" Hale Manual Valve with 30 Degree Droop Location: [#LOC]	$2,530
4415-0521	4" Right Pump Panel Discharge with 3" Hale Electric Valve with 30 Degree Droop Location: [#LOC]	$4,715
4415-0523	5" Right Panel Discharge w/4" Elkhart Electric UBEC3 Valve to read flow, and pressure. Location: [#LOC]	$6,613
4415-0524	3" Deck Gun Discharge Elkhart Unibody Manual Valve.	$1,820
4415-0525	1.5" Front Bumper Discharge Elkhart Unibody Manual Valve.	$1,597
4415-0526	Triple Speedlay (2) 1.5" and (1) 2.5" with Elkhart Unibody Manual Valves	$4,734
4415-0527	1.5" Crosslay w/2" Elkhart Electric Unibody UBEC1 Valve Location: [#LOC]	$2,756
4415-0528	2.5" Left Pump Panel Discharge Elkhart Unibody Electric Valve. Location: [#LOC]	$3,017
4415-0529	3" Right Pump Panel Discharge Elkhart Unibody Electric Valve Location: [#LOC]	$3,687
4415-0530	4" Pump Panel Discharge Elkhart UBEC1 Electric Valve (Waterous pumps noted location to be forward lower port). Location: [#LOC].	$4,520
4415-0531	4" Pump Panel Discharge Akron Electric Valve with 30 Degree Droop (Waterous pumps noted location to be forward lower port) Location: [#LOC]	$4,813
4415-0536	5" Right Pump Panel Discharge with 4" Akron Valve Handwheel Control. Location: [#LOC].	$3,799
4415-0537	2.5" Crosslay Elkhart Unibody Manual Valve. To be located rearward of 1.5" crosslay(s) if applicable. Location: [#LOC]	$1,341
4415-0538	1.5" Double Speedlay with Elkhart Unibody Manual Valves	$1,902
4415-0540	Triple Speedlay (2) 1.5" and (1) 2.5" with Elkhart Unibody Manual Valves	$4,251
4415-0541	3" Deck Gun Discharge Elkhart Unibody Manual Valve.	$1,716
4415-0542	Second 1.5" Front Bumper Discharge Elkhart Unibody Manual Valve	$1,597
4415-0543	3" Right Pump Panel Discharge Akron Manual Swing Valve (Waterous pumps noted location to be forward lower port) Location: [#LOC]	$1,820
4415-0544	3" Left Pump Panel Discharge Akron Manual Valve (Waterous pumps noted location to be forward lower port) Location: [#LOC]	$1,652
4415-0545	5" Pump Panel Discharge with 4" Elkhart UBEC1 Electric Valve Location: [#LOC]	$5,348
4415-0547	2.5" Front Bumper Discharge Elkhart Unibody Manual Valve	$1,892
4415-0549	1.5" Front Bumper Discharge Elkhart Electric UBEC1 Valve	$3,225
4415-0550	2.5" Double Speedlay with Akron Manual Valves	$2,276
4415-0551	2.5" Right Front Hosebed Discharge Akron Manual Valve. Locate offset 11.5" from officer side hosebed side.	$1,424
4415-0552	1.5" Front Bumper Crosslay Discharge Akron Manual Valve.	$2,133
4415-0553	2.5" Left Front Hosebed Discharge Akron Manual Valve located outlet shall be located 13.625" from inside hosebed wall.	$1,424
4415-0554	1.5" Triple Speedlay with Akron Valve Hand Wheel Control.	$6,394
4415-0555	3" Deck Gun Discharge Akron Manual Valve with no Plumbing from the valve to deck gun channel Dealer to install Extend-A-Gun and Plumbing from the valve to the channel..	$1,499
4415-0557	2.5" Left Rear Discharge Elkhart Unibody Manual Valve Location: [#LOC].	$1,297
4415-0558	2.5" Right Rear Discharge Elkhart Unibody Manual Valve Location: [#LOC].	$1,297
4415-0559	5" Right Pump Panel Discharge with 4" Elkhart Unibody Valve Handwheel Control Location: [#LOC]	$4,047

4415-0561	2.5" Left Panel Discharge Akron Electric Valve w/30 Degree Droop Location: [#LOC]	$3,271
4415-0562	3" Right Pump Panel Discharge Akron Electric Valve w/30degree Droop (Waterous pumps noted location to be forward lower port) Location: [#LOC]	$3,855
4415-0563	2.5" Right Panel Discharge Akron Electric Valve w/30 Degree Droop Location: [#LOC]	$3,271
4415-0564	3" Right Pump Panel Discharge Elkhart Electric Valve w/30degree Droop Location: [#LOC]	$3,855
4415-0566	1.5" crosslay w/2" Akron electric valve. Location: [#LOC].	$2,756
4415-0567	2.5" Crosslay w/Akron Electric Valve. To be located rearward of 1.5" crosslay(s) if applicable. Location: [#LOC].	$3,168
4415-0568	3" deck gun discharge Akron electric valve.	$3,714
4415-0569	4" deck gun discharge Akron electric valve.	$5,365
4415-0570	1.5" Front Bumper Discharge Akron Electric Valve.	$3,134
4415-0571	Second 1.5" Front Bumper Discharge Akron Electric Valve	$3,134
4415-0572	2.5" Front Bumper Discharge Akron Electric Valve	$3,287
4415-0573	Second 2.5" Front Bumper Discharge Akron Electric Valve	$3,287
4415-0574	2.5" Left Pump Panel Discharge Akron Electric Valve. Location: [#LOC].	$3,017
4415-0575	2.5" Left Panel Discharge Akron Electric Valve w/30 Degree Droop. Location: [#LOC].	$3,017
4415-0576	4" Pump Panel Discharge Akron Electric Valve. (Waterous pumps noted location to be forward lower port.) Location: [#LOC].	$4,520
4415-0577	5" Pump Panel Discharge with 4" Akron Electric Valve. Location: [#LOC].	$5,152
4415-0578	1.5" Left Rear Discharge Akron Electric Valve Location: [#LOC]	$2,874
4415-0579	2.5" Left Rear Discharge Akron Electric Valve. Location: [#LOC].	$3,185
4415-0580	3" Left Rear Discharge Akron Electric Valve. Location: [#LOC].	$3,881
4415-0581	4" Left Rear Discharge Akron Electric Valve.	$4,789
4415-0582	1.5" Right Rear Discharge Akron Electric Valve Location: [#LOC]	$2,874
4415-0583	2.5" Right Rear Discharge Akron Electric Valve. Location: [#LOC].	$3,185
4415-0584	3" Right Rear Dicharge Akron Electric Valve Location: [#LOC]	$3,881
4415-0585	4" Right Rear Discharge Akron Electric Valve.	$5,027
4415-0586	2.5" Right Pump Panel Discharge Akron Electric Valve. Location: [#LOC].	$3,017
4415-0587	3" Right Pump Panel Discharge Akron Electric Valve. Location: [#LOC].	$3,687
4415-0588	4" Right Pump Panel Discharge w/3" Akron Electric Valve (Waterous pumps noted location to be forward lower port) Location: [#LOC]	$3,965
4415-0589	5" Right Pump Panel Discharge w/3" Akron Electric Valve. Location: [#LOC].	$4,682
4415-0590	2.5" Right Panel Discharge Akron Electric Valve w/30 Degree Droop. Location: [#LOC].	$3,271
4415-0591	3" Right Panel Discharge Akron Electric Valve w/30 Degree Droop (Waterous pumps noted location to be forward lower port). Location: [#LOC].	$3,993
4415-0592	4" Right Panel Discharge w/3" Akron valve electric w/droop (Waterous pumps noted location to be forward lower port). Location: [#LOC].	$4,273
4415-0593	3" Right Pump Panel Discharge Akron Electric Valve w/30degree Droop (Waterous pumps noted location to be forward lower port) Location: [#LOC]	$3,855
4415-0594	2.5" Right Panel Discharge Akron Electric Valve w/30 Degree Droop Location: [#LOC]	$3,271
4415-0595	1.5" Left Front Hosebed w/2" Akron Electric Valve	$2,819
4415-0596	2.5" Left Front Hose Bed Akron Electric Valve.	$3,456
4415-0597	3" Left Front Hose Bed Akron Electric Valve.	$4,170
4415-0598	Second Left Front Hosebed 1.5" w/2" Akron Electric Valve	$2,819
4415-0599	Second Left Front Hosebed 2.5" Akron Electric Valve	$3,456
4415-0600	Second Left Front Hosebed 3" Akron Electric Valve	$4,170
4415-0601	1.5" Crosslay w/2" Akron Electric Valve Location: [#LOC]	$2,756
4415-0602	1.5" Right Front Hosebed w/2" Akron Electric Valve	$2,819
4415-0603	2.5" Right Front Hose Bed Akron Electric Valve.	$3,456
4415-0604	3" Right Front Hose Bed Akron Electric Valve.	$4,170
4415-0605	Second Right Front Hosebed 1.5" w/2" Akron Electric Valve	$2,819
4415-0606	Second Right Front Hosebed 2.5" Akron Electric Valve	$3,456
4415-0607	Second Right Front Hosebed 3" Akron Electric Valve	$4,170
4415-0608	Double 1.5" Speedlay w/2" Akron Electric Valves.	$5,523
4415-0609	Triple 1.5" Speedlay w/2" Akron Electric Valves	$8,410
4415-0610	Triple (2) 1.5" & (1) 2.5" Speedlay w/(2) 2" & (1) 2.5" Akron Electric Valves	$10,135
4415-0611	Triple (2) 1.5" & (1) 2.5" Speedlay w/(2) 2" & (1) 2.5" Akron Electric Valves	$10,135
4415-0613	4" waterway discharge with 4" Akron electric valve.	$4,520
4415-0614	3" Left Panel Discharge Top Mount Akron Electric Valve Location: [#LOC]	$3,788
4415-0615	3" Left Panel Discharge Top Mount Akron Electric Valve w/30 Degree Droop (Waterous pumps noted location to be forward lower port) Location: [#LOC]	$4,097
4415-0616	Third Right Front Hosebed Discharge 2.5" Akron Manual Valve.	$1,424
4415-0617	2.5" Left Panel Discharge Akron Manual 3" Valve w/30 Degree Droop. Location: [#LOC].	$1,582
4415-0618	2.5" Auxillary Deck Gun Discharge Manual Valve. Plumbed from foam manifold and "Y" into Deck Gun pipe downstream from main Deck Gun discharge valve.	$1,108
4415-0619	4" Right Pump Panel Discharge with 3" Akron Manual Valve. The 4" NST threads shall be a integral part of the valve. (Waterous pumps noted location to be forward lower port.) Location: [#LOC].	$1,861
4415-0620	3" Right Rear Discharge Elkhart Unibody Manual Valve Location: [#LOC]	$1,991
4415-0621	3" Left Front Hosebed Discharge Elkhart Unibody Manual Valve	$2,281
4415-0622	3" Right Front Hosebed Discharge Elkhart Unibody Manual Valve	$2,281
4415-0623	3" Left Rear Discharge Elkhart Unibody Manual Valve Location: [#LOC]	$1,991
4415-0624	4" Rear Discharge w/3" Akron Valve Handwheel Control for Rear Mount. The 4" NST Adapter shall be a integral part of the valve.	$3,399

4415-0625	3" Deck Gun Discharge Akron Valve Handwheel Control for Rear Mount located at rear.	$3,653
4415-0626	Triple Speedlay (forward to rearward or bottom to top) (2) 1.5" and (1) 2.5" with Akron Manual Valve. Speedlays are side by side and located inside transverse compartment.	$2,084
4415-0627	3" Deck Gun Discharge Elkhart Electric Unibody UBEC3Valve to read flow, and pressure.	$5,687
4415-0628	5" Pump Panel Discharge Elkhart Electric UBEC3 Valve to read flow, and pressure. Location; [#LOC]	$5,960
4415-0629	2.5" Right Rear Discharge Elkhart Unibody Manual Valve Location: [#LOC]	$1,297
4415-0630	4" Left Pump Panel Discharge w/3" Akron Electric Valve (Waterous pumps noted location to be forward lower port) Location: [#LOC]	$3,965
4415-0631	4" Rear Discharge w/4" Akron Valve Handwheel Control for Rear Mount. The 4" NST 30 degree Adapter shall be a integral part of the valve.	$3,995
4415-0632	1.5" Left Front Hose Bed Preconnect Elkhart Unibody Manual Valve.	$1,062
4415-0633	1.5" Right Front Hosebed Preconnect Elkhart Unibody Manual Valve	$1,062
4415-0634	Second Left Front Hosebed Discharge 2.5" Elkhart Unibody Manual Valve	$1,569
4415-0635	Second Right Front Hosebed Discharge 2.5" Elkhart Unibody Manual Valve	$1,569
4415-0636	4" Right Pump Panel Discharge with 3" Elkhart Unibody Manual Valve. (Waterous pumps noted location to be forward lower port.) Location: [#LOC].	$2,073
4415-0637	Second Left Front Hosebed Discharge 3" w/ 3" Elkhart Unibody Manual Valve and shall terminate with a 3"FNPT X 2.5"MNST adapter.	$2,281
4415-0638	Second Right Front Hosebed Discharge 2.5" w/3" Elkhart Unibody Manual Valve and shall terminate with a 3"FNPT X 2.5"MNST adapter.	$2,281
4415-0639	2.5" Left Rear Rearmount Discharge Akron Manual Valve	$1,483
4415-0642	2.5" rear preconnect with crosslay style swivel. For use with rear mount pump application. Includes Akron manual valve with controller located on pump operator panel. Locate: [#LOC].	$1,983
4415-0645	1.5" rear preconnect with crosslay style swivel. For use with rear mount pump application. Includes Akron manual valve with controller located on pump operator panel. Locate: [#LOC].	$1,770
4415-0646	1.5" speedlay preconnect with swivel. For use with rear mount pump application. Includes Akron manual valve with controller located on pump operator panel. Locate [#LOC]	$2,116
4415-0648	2.5" speedlay preconnect with swivel. For use with rear mount pump application. Includes Akron manual valve with controller located on pump operator panel. Locate [#LOC]	$2,341
4415-0653	1.5" double pre-connect. Includes Akron manual 2" valves with controls located in body compartment on pump operator panel.	$1,872
4415-0654	2.5" Discharge with droop. Located at discharge #1 driver side and includes Akron electric valve with controller located on pump operators panel.	$2,416
4415-0655	2.5" Discharge with droop. Located at discharge #2 driver side and includes Akron electric valve with controller located on pump operators panel.	$2,416
4415-0656	3" Discharge with droop. Located at discharge #1 officer side and includes Akron electric valve with controller located on pump operators panel.	$3,102
4415-0657	3" Deck gun. Includes Akron manual valve with controller located in body compartment on pump operators panel.	$2,055
4415-0658	2.5" Driver rear discharge with cap and NFPA retainer. Includes Akron manual valve with controller located in body compartment on pump operator panel.	$1,630
4415-0659	2.5" Left Pump Panel Discharge Elkhart Unibody Electric Valve with Droop. Location: [#LOC]	$3,141
4415-0660	2.5" Right Panel Discharge Elkhart Unibody Electric Valve w/Droop Location: [#LOC]	$3,141
4415-0661	4" Right Pump Panel Discharge w/3" Elkhart Electric Unibody Valve (Waterous pumps noted location to be forward lower port) Location: [#LOC]	$3,559
4415-0662	3" Deck Gun Discharge Elkhart Electric Unibody Valve	$3,714
4415-0665	1.5" Front Bumper Discharge Akron Electric Valve & Navigator 9315	$5,755
4415-0666	Triple (2) 1.5" & (1) 2.5" Speedlays w/(2) 2" & (1) 2.5" Akron Electric Valves & Navigator 9315	$17,600
4415-0667	2.5" Left Panel Dishcarge Akron Electric Valve & Navigator 9315 w/30 Degree Droop Location: [#LOC]	$5,552
4415-0668	2.5" Right Panel Discharge Akron Electric Valve & Navigator 9315 w/30 Degree Droop Location: [#LOC]	$5,552
4415-0669	2.5" Left Rear Discharge Akron Electric Valve & Navigator 9315 Location: [#LOC]	$6,084
4415-0670	3" Right Panel Discharge Akron Electric Valve & Navigator 9315 w/30 Degree Droop (Waterous pumps noted location to be forward lower port) Location: [#LOC]	$6,468
4415-0671	1.5" double speedlays with Akron manual valves. Each outlet connection shall terminate externally (no swivels) on the side of the module just below the speedlay.	$1,853
4415-0672	1.5" Triple Speedlay with Akron Manual Valve. Each outlet connection shall terminate externally (no swivels) on the side of the module just below the speedlay.	$2,908
4415-0673	Triple Speedlay (2) 1.5" and (1) 2.5" with Akron Manual Valve. Each outlet connection shall terminate externally (no swivels) on the side of the module just below the speedlay.	$4,150
4415-0674	1.5" Double Speedlay with Elkhart Manual Valves. Each outlet connection shall terminate externally (no swivels) on the side of the module just below the speedlay.	$2,007
4415-0675	1.5" Triple Speedlay Elkhart Manual Valves. Each outlet connection shall terminate externally (no swivels) on the side of the module just below the speedlay.	$3,139
4415-0676	Triple Speedlay (2) 1.5" and (1) 2.5" with Elkhart Manual Valves. Each outlet connection shall terminate externally (no swivels) on the side of the module just below the speedlay.	$4,734
4415-0677	1.5" Front Bumper Discharge Akron Electric Valve. For use with rear mount pump. Includes air blow-out with control on pump operator panel.	$2,390
4415-0678	1.5" front bumper discharge with Akron manual valve. For use with rear mount pump. Includes air blow-out with control on pump operator panel.	$1,463
4415-0679	1.5" front bumper discharge with Elkhart unibody manual valve. For use with rear mount pump. Includes air blow-out with control on pump operator panel.	$1,396

4415-0680	1.5" front bumper discharge with Elkhart unibody electric valve. For use with rear mount pump. Includes air blow-out with control on pump operator panel.	$2,390
4415-0681	2.5" front bumper discharge with Akron manual valve. For use with rear mount pump. Includes air blow-out with control on pump operator panel.	$1,728
4415-0682	2.5" front bumper discharge with Elkhart unibody manual valve. For use with rear mount pump. Includes air blow-out with control on pump operator panel.	$1,728
4415-0683	2.5" Front Bumper Discharge Akron Electric Valve. For use with rear mount pump. Includes air blow-out with control on pump operator panel.	$2,845
4415-0684	2.5" front bumper discharge with Elkhart unibody electric valve. For use with rear mount pump.	$2,845
4415-0687	2.5" rear panel discharge with Akron manual valve. For use with rear mount pump. Location [#LOC].	$1,211
4415-0688	2.5" rear panel discharge with Elkhart unibody manual valve. For use with rear mount pump. Location [#LOC].	$1,211
4415-0689	3" rear panel discharge with Akron manual valve. For use with rear mount pump. Location [#LOC].	$1,460
4415-0690	3" rear panel discharge with Elkhart unibody manual valve. For use with rear mount pump. Location [#LOC].	$1,460
4415-0691	3" rear panel discharge with Elkhart unibody electric valve. For use with rear mount pump. Location [#LOC].	$3,079
4415-0692	3" rear panel discharge with Akron electric valve. For use with rear mount pump. Location [#LOC].	$3,079
4415-0694	4" rear panel discharge with 3" Akron manual valve. For use with rear mount pump. Location [#LOC].	$1,479
4415-0695	4" rear panel discharge with 3" Elkhart unibody electric valve. For use with rear mount pump. Location [#LOC].	$2,702
4415-0696	4" rear panel discharge with 3" Akron electric valve. For use with rear mount pump. Location [#LOC].	$2,702
4415-0697	4" rear panel discharge with 4" Akron electric valve. For use with rear mount pump. Location [#LOC].	$3,640
4415-0698	4" rear panel discharge with 4" Elkhart unibody electric valve. For use with rear mount pump. Location [#LOC].	$3,640
4415-0699	5" rear panel discharge with 4" Akron electric valve. For use with rear mount pump. Location [#LOC].	$5,152
4415-0700	5" rear panel discharge with 4" Elkhart unibody electric valve. For use with rear mount pump. Location [#LOC].	$5,152
4415-0703	1.5" preconnect discharge with Elkhart unibody manual valve. Includes swivel style connection. Location [#LOC].	$1,119
4415-0704	2.5" preconnect discharge with Elkhart unibody manual valve. Includes swivel style connection. Location [#LOC].	$1,336
4415-0705	2.5" preconnect discharge with Akron electricl valve. Includes swivel style connection. Location [#LOC].	$2,546
4415-0706	2.5" preconnect discharge with Elkhart unibody electricl valve. Includes swivel style connection. Location [#LOC].	$2,546
4415-0707	1.5" preconnect discharge with Akron electric valve. Includes swivel style connection. Location [#LOC].	$2,478
4415-0708	1.5" preconnect discharge with Elkhart unibody electric valve. Includes swivel style connection. Location [#LOC].	$3,006
4415-0709	3" Deck gun discharge with Akron manual valve. For use with rear mount pump and for forward body area. Location [#LOC].	$2,204
4415-0710	3" Deck gun discharge with Akron electric valve. For use with rear mount pump and for forward body area. Location [#LOC].	$3,409
4415-0712	3" Deck gun discharge with Elkhart unibody electricl valve. For use with rear mount pump and for forward body area. Location [#LOC].	$3,409
4415-0713	3" Deck gun discharge with Akron manual valve. For use with rear mount pump and for rearward body/pump module area. Location [#LOC].	$1,318
4415-0714	3" Deck gun discharge with Akron electric valve. For use with rear mount pump and for rearward body/pump module area. Location [#LOC].	$2,812
4415-0718	1.5" Single Speedlay with Akron Manual Valves.	$1,004
4415-0719	3" Deck Gun Discharge Akron Electric Valve & Navigator 9315	$6,612
4415-0720	4" Right Pump Panel Discharge w/3" Akron Electric Valve & Navigator 9315 (Waterous pumps noted location to be forward lower port) Location: [#LOC]	$6,857
4415-0721	Quad Speedlay (3) 1.5" / (1) 2.5" with Akron Manual Valves. Located inside transverse compartment.	$3,085
4415-0722	3" Deck Gun Discharge Akron Electric Valve with a 9315 valve controller with pressure reading only. [#LOC]	$4,135
4415-0723	4" Discharge Akron Electric Valve & Navigator 9315 (Waterous pumps noted location to be forward lower port). Location: [#LOC].	$7,982
4415-0724	4" Rear Mount Discharge w/3" Akron 9315 Electric Valve to read Flow and Pressure with 30 degree droop (Waterous pumps noted location to be forward lower port) Location: [#LOC]	$6,857
4415-0725	4" Rear Mount Discharge w/3" Akron 9315 Electric Valve to read Pressure (Waterous pumps noted location to be forward lower port) Location: [#LOC]	$3,913
4415-0726	1.5" Front Bumper Discharge Akron Electric Valve & Navigator 9315 with Pressue Reading only.	$3,510
4415-0727	1.5" Crosslay w/2" Akron Electric Valve & Navigator 9315 to Read Pressure only Location: [#LOC]	$3,267

4415-0728	2.5" Rear Mount Discharge Akron Electric Valve & Navigator 9315 to Read Pressure only. Location: [#LOC]	$3,426
4415-0730	2.5" Left Rear Discharge UBEC3 Electric Valve to read flow, and pressure. Location: [#LOC]	$5,471
4415-0731	2.5" Left Pump Panel Discharge UBEC3 Electric Valve with 30 degree droop to read flow, and pressure. Location: [#LOC]	$5,440
4415-0732	2.5" Right Pump Panel Discharge UBEC3 Electric Valve with 30 degree droop to read flow, and pressure. Location: [#LOC]	$5,440
4415-0733	4.5" Right Pump Panel Discharge with 3" Akron Manual Valve w/Droop Location: right side discharge 1 [#LOC]	$2,359
4415-0735	3" Left Hosebed Akron Electric Valve located Driver side rear below hosebed.	$4,170
4415-0736	3" Right Hosebed Akron Electric Valve located Officer side rear below hosebed.	$4,170
4415-0737	2.5" Discharge with droop. Located at discharge #2 officer side and includes Akron electric valve with controller located on pump operators panel.	$2,416
4415-0738	2.5" upper preconnect. Includes Akron manual valve with controller located in body compartment on pump operator panel.	$1,630
4415-0739	3" Right Pump Panel Discharge Elkhart Electric Valve w/30degree Droop to Terminate with 2.5" MNST w/cap Location: [#LOC]	$3,855
4415-0740	2.5" preconnect discharge with Akron manual valve. With swivel style connection. Location: [#LOC].	$1,336
4415-0741	1.5" preconnect discharge with Akron manual valve. With swivel style connection. Location: [#LOC].	$1,119
4415-0742	2.5" rear panel discharge with Akron electric valve. For use with rear mount pump. Location [#LOC].	$2,896
4415-0743	2.5" rear panel discharge with Elkhart unibody electric valve. For use with rear mount pump. Location [#LOC].	$2,896
4415-0744	2.5" Crosslay w/2.5" Akron Electric Valve & Navigator 9315 to Read Pressure only Location: [#LOC]	$3,785
4415-0746	2.5" Right Panel Discharge Akron Electric 9315 Navigator Valve w/30 Degree Droop to Read Pressure only Location: [#LOC]	$3,760
4415-0747	4" Pump Panel Discharge Akron Electric Navigator 9315 Valve (Read Pressure only) Location: [#LOC]	$4,950
4415-0749	4" rear panel discharge with 4" Akron manual valve with handwheel. For use with rear mount pump. Location [#LOC].	$3,096
4415-0751	2.5" Crosslay Elkhart UBEC3 Electric Valve to read flow, and pressure.. To be located rearward of 1.5" crosslay(s) if applicable. Location: [#LOC]	$5,316
4415-0753	Second Left Front Hosebed Preconnect 1.5" Elkhart Unibody Manual Valve	$1,062
4415-0754	Left Front Hose Bed Discharge 2.5" Elkhart Unibody Manual Valve.	$1,569
4415-0755	Right Front Hosebed Discharge 2.5" Elkhart Unibody Manual Valve	$1,569
4415-0756	Second 1.5" Right Front Hosebed Preconnect Elkhart Unibody Manual Valve	$1,062
4415-0757	1.5" Front Bumper Discharge Elkhart Electric UBEC3 Valve to read flow, and pressure.	$5,227
4415-0758	Left Front Hosebed Discharge 2.5" Elkhart Unibody UBEC3 Valve to read flow, and pressure.	$5,401
4415-0759	Right Front Hosebed Discharge 2.5" Elkhart Unibody UBEC3 Valve to read flow, and pressure.	$5,401
4415-0760	2.5" Front Bumper Discharge Akron Manual Valve without Blowout.	$1,746
4415-0761	4" Officer panel discharge w/ 3" Akron electric valve. Location: [#LOC]	$3,557
4415-0762	4" Pump Panel Discharge Akron Electric Valve with 30 Degree Droop. Location: [#LOC].	$4,813
4415-0763	3" Discharge with 4" connection (no droop). Located at discharge #1 officer side and includes Akron electric valve with controller located on pump operators panel.	$3,561
4415-0764	3" Discharge with 4" connection (no droop). Located at discharge #1 driver side and includes Akron electric valve with controller located on pump operators panel.	$3,561
4415-0765	2.5" Discharge with droop. Located at discharge #2 officer side and includes Akron electric valve with controller located on pump operators panel.	$2,416
4415-0766	1.5" double pre-connect. Includes Akron electric 2" valves with controls located in body compartment on pump operator panel.	$4,366
4415-0767	2.5" Right Panel Discharge Akron Manual 3" Valve w/30 Degree Droop Location: [#LOC]	$1,582
4415-0768	2.5" Crosslay w/Akron Electric Valve & Navigator 9315. To be located rearward of 1.5" crosslay(s) if applicable. Location: [#LOC]	$5,992
4415-0769	Double 1.5" Speedlay w/2" Akron Electric Valves & Navigator 9315	$10,239
4415-0770	2.5" Right Front Hosebed Akron Electric Valve & Navigator 9315	$6,357
4415-0771	4" Deck Gun Discharge Akron Electric Valve & Navigator 9315	$6,703
4415-0772	4" Deck Gun Discharge Elkhart Electric Unibody Valve	$5,555
4415-0773	2.5" Right Pump Panel Discharge w/3" Elkhart Electric Unibody Valve and 30degree Droop [#LOC]	$3,855
4415-0774	3" Right Front Hosebed Elkhart Electric Unibody Valve	$3,669
4415-0775	3" Left Front Hosebed Elkhart Electric Unibody Valve	$3,669
4415-0776	2.5" Left Pump Panel Discharge w/3" Elkhart Electric Unibody Valve and 30degree Droop [#LOC]	$3,855
4415-0777	2.5" Left Panel Discharge 3" Akron Electric 9315 Navigator Valve w/30 Degree Droop to Read Pressure and Flow Location: [#LOC]	$5,583
4415-0778	2.5" Crosslay w/Akron 3" Electric Valve & Navigator 9315 include 3" plumbing. To be located rearward of 1.5" crosslay(s) if applicable. Location: [#LOC]	$6,200
4415-0779	2.5" Left Rear Discharge with Akron Navigator 9315 3" Electric Valve and 3" Piping Location: [#LOC]	$7,066
4415-0780	2.5" Right Front Hosebed Include Akron 3" Electric Valve & 9315 NavigatorControler w/3" Plumbing.	$7,066

4415-0781	3" Right Pump Panel Discharge UBEC3 Electric Valve with 30 degree droop to read flow, and pressure. Location: [#LOC]	$6,468
4415-0782	2.5" Left Front Hosebed Include Akron 3" Electric Valve & 9315 NavigatorControler w/3" Plumbing. To terminate at the left front of the hosebed.	$7,066
4415-0783	Double 2.5" Speedlay w/Akron Navigator 9315 3" Electric Valve Controller. Include 3" piping and to terminate with a 2.5" brass swivel.	$12,400
4415-0784	1.5" Rear Panel Discharge manual Akron Valve. Locate [#LOC]	$1,519
4415-0805	5" Left Pump Panel Discharge W/4" Akron Electric Navigator 9315 valve and controller. Include valve position display pressure and flow meter. [#LOC]	$8,058
4415-0806	5" Right Pump Panel Discharge W/4" Akron Electric Navigator 9315 valve and controller. Include valve position display pressure and flow meter. [#LOC]	$8,058
4415-0807	Dual Ground Sweep Nozzles 50 GPM. Locate at front (1) left and (1) right sides control at operator panel.	$1,539
4415-0808	2.5" Left Rear Discharge w/3" Akron Manual Valve. Include 3" plumbing to terminate with 2.5" threads.Location: [#LOC]	$1,778
4415-0811	Akron 2.5" foam system discharge with swing handle. For use with Williams Advent or Hot Shot foam systems. Locate to [#LOC].	$1,089
4415-0812	Elkhart Unibody 2.5" foam system discharge with swing handle. For use with Williams Advent or Hot Shot foam systems. Locate to [#LOC].	$1,089
4415-0818	2.5" preconnect discharge with Akron manual valve. Location: [#LOC].	$1,336
4415-0820	5" Right Side Discharge 5" Akron Electric Valve. Locate: [#LOC].	$5,196
4415-0830	3" Right Pump Panel Discharge Elkhart Unibody Manual Valve. Location: [#LOC]	$1,672
4415-0831	3" Right Pump Panel Discharge Elkhart Electric Unibody Valve with 30 degre droop elbow. Location: [#LOC]	$3,567
4415-0834	4" Deck Gun Discharge Outlet with 6" Electric Elkhart Valve and plumbing. Require 4" Monitor	$5,899
4415-0835	4" Deck Gun Discharge Outlet with 6" Electric Akron Valve and plumbing. Requires 4" Monitor.	$5,899
4415-0842	5" Right Side Discharge 5" Elkhart Electric Valve. Locate: [#LOC]	$5,196
4415-0847	Akron 635 Swivel with turning vane Located on Top of Bumper officer's side of center tray for Front Bumper Discharge	$165
4415-0848	4" Left Pump Panel Discharge with 3" Elkhart Unibody Manual Valve (Waterous pumps noted location to be forward lower port) Location: [#LOC]	$2,073
4415-0849	5" Pump Panel Discharge 4" Akron Electric Valve & Navigator 9315 (Waterous pumps noted location to be forward lower port) Location: [#LOC]	$7,598
4415-0850	1.5" Double Speedlay w/2" Elkhart Unibody Electric Valve UBEC3 to read flow, and pressure..	$9,707
4415-0852	6" Right Side Discharge 6" Elkhart Electric Valve with Unibody controller. Locate: [#LOC]	$5,876
4415-0853	6" Left Side Discharge 6" Elkhart Electric Valve with Unibody controller. Locate: [#LOC]	$5,876
4415-0854	3" Left Rear Discharge Elkhart Electric Unibody Valve Location: [#LOC]	$3,344
4415-0855	3" Right Rear Discharge Elkhart Electric Unibody Valve Location: [#LOC]	$3,344
4415-0856	3" Right Side Discharge Elkhart Electric Unibody Valve. Location: [#LOC]	$3,344
4415-0858	Triple speedlay with (1) 1.5" and (1) 2.5" in lower storage area and (1) 1.5" in upper storage area. All with Akron manual valves.	$3,362
4415-0859	Triple speedlay with (1) 1.5" and (1) 2.5" in lower storage area and (1) 1.5" in upper storage area. All with Elkhart Unibody manual valves.	$3,470
4415-0874	1.75" Front Bumper Crosslay Discharge with 2" Akron Manual Valve. Include 2" plumbing from pump compartment to back of cab. From back of cab to crosslay swivel will be 2" plumbing.	$2,290
4415-0877	2.5" Crosslay Elkhart UBEC1 Electric Valve. To be located rearward of 1.5" crosslay(s) if applicable. Location: [#LOC]	$2,698
4415-0878	2.5" Right Panel Discharge Elkhart Unibody Electric Valve. Location: [#LOC]	$3,035
4415-0880	2.5" Left Panel Discharge with Elkhart Unibody Manual 3" Valve and 30 Degree Droop Location: [#LOC]	$1,582
4415-0881	2.5" Right Panel Discharge Elkhart Unibody Manual 3" Valve w/30 Degree Droop Location: [#LOC]	$1,582
4415-0882	2.5" preconnect discharge with Akron 3" manual valve and 3" plumbing reduce to a 2.5" at the swivel. For use on rear mount pump. Includes swivel style connection. Location: driver side under hosebed (outboard).	$1,860
4415-0883	6" Right Side Discharge 6" Akron Electric Valve. Locate: [#LOC].	$5,876
4415-0886	3" Right Pump Panel Discharge Elkhart Manual Unibody Valve with 30 degre droop elbow. Location: [#LOC]	$1,778
4415-0887	Triple speedlay with (1) 1.5" and (1) 2.5" in lower storage area and (1) 1.5" in upper storage area. All with Akron electric valves.	$8,563
4415-0888	2.5" Left Pump Panel Discharge UBEC3 Electric Valve to read flow, and pressure. Location: [#LOC]	$4,943
4415-0889	2.5" Front Bumper Discharge Elkhart Electric UBEC3 Valve to read flow, and pressure.	$5,433
4415-0892	3" Front Bumper Discharge Akron Manual Valve. Location; 3" front bumper discharge piped through the center of the center front bumper tray and to come out thru the front bumper. Piping to have a cover plate in tray.	$3,596
4415-0895	Hose bib discharge 3/4" with valve. Location Officer's side pump panel.	$298
4415-0897	2.5" Right Rear Discharge Elkhart Electric Unibody Valve Location: [#LOC]	$2,708
4415-0898	2.5" Left Rear Discharge Elkhart Unibody Electric Valve Location: [#LOC]	$3,017
4415-0899	4" Waterway Discharge with 3" Elkhart Unibody Manual Valve	$2,407
4415-0900	5" Right Side Discharge 5" Akron Hydraulic activated Valve. Location: [#LOC]	$5,196
4415-0903	1.5" Front Bumper Crosslay Discharge Akron Manual Valve	$2,234

4415-0904	2" front bumper discharge Elkhart Electric valve. Include Elkhart electric valve, plumbing, and harness from the valve to joystick control located in cab console. Discharge to terminate and capped off just below the center of the bumper for dealer supplied and installed joystick, and bumper turret.	$2,342
4415-0905	Akron 1.5" foam system discharge with swing handle. For use with Williams Advent or Hot Shot foam systems. Locate to [#LOC].	$885
4415-0907	1.5" front bumper discharge plumbing from back of cab to front bumper.	$543
4415-0908	2.5" Rear Mount Discharge Akron Electric Valve & Navigator 9315 to Read Pressure only w/30 Degree Droop. Location: [#LOC]	$3,543
4415-0910	2.5" hose bed discharge Akron manual valve [#LOC].	$1,424
4415-0911	Double 1.5" Speedlay w/2" Akron Electric Valves & Navigator 9315 to read Pressure only.	$6,530
4415-0912	Second Left Front Hosebed 3" Elkhart Unibody manual Valve	$2,280
4415-0915	6" Waterway Discharge with 6" Akron Electric Valve.	$5,883
4415-0916	4" Deck Gun Discharge Akron Valve Handwheel Control.	$4,439
4415-0918	1.5" Front Bumper Crosslay Discharge Elkhart Unibody Manual Valve	$2,133
4415-0919	Deck gun monitor 3" Gemini manual hand wheel model 34700011 and nozzle 2.5" NH Excel model 51471000.	$3,368
4415-0920	Left Front Hosebed Discharge 2.5" Elkhart Unibody UBEC1 Valve.	$2,981
4415-0921	Right Front Hosebed Discharge 2.5" Elkhart Unibody UBEC1 Valve.	$2,981
4415-0923	4" Right Pump Panel Discharge with 3" Akron Manual Valve. Include a 4"FNST swivel x 4"MNST 30 degree droop adapter, and cap. Location: [#LOC].	$2,170
4415-0924	2.5" Single Speedlay with Akron manual valve located at lower storage area offset to rear.	$1,273
4415-0925	All Discharge/Intake caps, and plug to be Kochek brand and Powder coated. Color; White.	$577
4415-0926	1.5"/2.5" Double Speedlay with Akron Manual Valves, upper 1.75" speedlay and lower 2.5" speedlay.	$2,261
4415-0929	2.5" Right Front Hosebed Akron Electric Valve & Pro Navigator 9325 controller with pressue read out.	$4,148
4415-0930	2.5" Left Front Hosebed Akron Electric Valve & Pro Navigator 9325 controller with pressue read out.	$4,148
4415-0931	2.5" Front Bumper Discharge Akron Electric Valve & Navigator Pro Controller 9325 with pressure read out.	$3,983
4415-0932	Double 1.5" Speedlay w/2" Akron Electric Valves & Navigator Pro 9325 with Pressure read out.	$6,944
4415-0933	2.5" Right Panel Discharge Akron Electric Valve & Navigator Pro 9325 controller w/30 Degree Droop to Read Pressure. Location: [#LOC]	$3,969
4415-0934	2.5" Left Panel Discharge Akron Electric Valve & Navigator Pro 9325 controller w/30 Degree Droop to Read Pressure. Location: [#LOC]	$3,721
4415-0935	4" Right Pump Panel Discharge w/3" Akron Electric Valve & Navigator Pro 9325 with Pressure read out. (Waterous pumps noted location to be forward lower port) Location: [#LOC]	$4,945
4415-0936	4" Pump Panel Discharge Akron Electric Valve & Navigator 9325 to read flow, and pressure w/30 degree droop. (Waterous pumps noted location to be forward lower port). Location: [#LOC].	$5,712
4415-0937	3" Deck Gun Discharge Akron Electric Valve & Navigator read flow, and pressure with 9325 controller.	$5,095
4415-0938	2.5" Left Pump Panel Discharge Akron Manual Valve. The discharge shall extend out beyond the pump panel w/Chrome plated finish. Location: [#LOC].	$1,111
4415-0939	2.5" Right Pump Panel Discharge Akron Manual Valve. The discharge shall extend out beyond the pump panel w/Chrome plated finish. Location: [#LOC].	$1,111
4415-0940	3" Right Pump Panel Discharge Akron Manual Valve. The discharge shall extend out beyond the pump panel w/Chrome plated finish. (Waterous pumps noted location to be forward lower port). Location: [#LOC].	$1,708
4415-0941	4" Right Pump Panel Storz Discharge with 3" Akron Manual Valve. Include 3" FNST X 4" Storz 30 degree elbow adapter with cap. (Waterous pumps noted location to be forward lower port). Location: [#LOC].	$2,371
4415-0942	Left Rear Discharge 2.5" Elkhart Unibody electric valve with UICS-2 CAFS Controller.	$4,227
4415-0943	3" Deck Gun Discharge Akron Electric Valve & Navigator with 9323 controller.	$3,734
4415-0944	3" Right Panel Discharge Akron Electric Valve & Navigator 9325 w/30 Degree Droop (Waterous pumps noted location to be forward lower port) Location: [#LOC]	$5,061
4415-0945	1.5" Front Bumper Discharge Elkhart Electric Valve with UICS-2 CAFS Controller.	$4,471
4415-0946	1.5" Crosslay w/2" Elkhart Electric Unibody Valve with UICS-2 CAFS Controller. Location: [#LOC].	$4,002
4415-0947	2.5" Right Panel Discharge Elkhart Unibody Electric Valve w/Droop, and include UICS-2 CAFS Controller. Location: [#LOC].	$4,386
4415-0948	Preconnect extension (Each). The front hosebed preconnect to be extended to the rear of the hosebed area. Includes smooth plate cover. Location: [#LOC].	$457
4415-0952	4" Deck Gun Discharge Outlet with 6" Electric Akron Valve and plumbing. Require 4" Monitor. Locate right rear.	$6,902
4415-0954	1.5" Front Bumper Discharge Akron Electric Valve & Navigator 9325 controller to read flow, and pressure..	$5,525
4415-0955	3" Deck Gun Discharge Akron Electric Valve with 9325 Navigator Controller to read flow, and pressure.	$5,664
4415-0956	4" Right Rear Discharge Akron Electric Valve with 9325 Navigatorcontroller to read flow, and pressure. [#LOC].	$7,490
4415-0963	One (1) pre-connect 1.5" adaptation to Storz. The pre-connect extension hose shall include an adapter to Storz and the pre-connect nozzle (sold separately in loose equipment) shall be supplied with a Storz adapter.	$187

4415-0964	Triple speedlay with (2) 1.5" in lower storage area and (1) 2.5" in upper storage area. All with Akron manual valves.	$3,362
4415-0965	Left Front Hosebed Discharge 3" Akron Manual Valve and shall terminate with a 3"FNPT X 2.5"MNST adapter.	$2,081
4415-0966	Right Front Hosebed Discharge 3" Akron Manual Valve and shall terminate with a 3"FNPT X 2.5"MNST adapter.	$2,081
4415-0967	1.5" Crosslay w/2.5" Akron Manual Valve and plumbing. Include 2.5" FNST X 1.5" MNST adapter. Location: [#LOC].	$1,153
4415-0969	2.5" left front hose bed discharge Akron manual valve. Locate discharge(s) approximately 26" up from hosebed floor.	$1,708
4415-0970	5" Right Pump Panel Discharge with 3" Akron Manual Valve w/Droop. Include a 3"FNST swivel x 5"Storz adapter, and a 5"Storz x 4" Storz with cap. Location: [#LOC].	$2,480
4415-0972	4" Right Pump Panel Storz Discharge with 4" Akron Electric Valve. Include 4" FNST X 4" Storz 30 degree elbow adapter with cap. (Waterous pumps noted location to be forward lower port). Location: [#LOC].	$4,688
4415-0973	5" Right Pump Panel Storz Discharge with 3" Akron Manual Valve. Include 3" FNST X 5" Storz 30 degree elbow adapter with cap. (Waterous pumps noted location to be forward lower port). Location: [#LOC].	$2,480
4415-0975	2.5" Front Bumper Crosslay Discharge Akron Electric Valve.	$3,287
4415-0976	3" Auxillary CAFS Deck Gun Discharge Electric Unibody Valve. Plumbed from foam manifold and "Y" into Deck Gun pipe downstream from main Deck Gun discharge valve.	$3,714
4415-0977	2.5" Front Bumper Crosslay Discharge Akron Manual Valve.	$2,440
4415-0980	6" Right Rear Discharge 6" Akron Electric Valve with 9323 controller. Locate: right rear discharge.	$5,977
4415-0981	6" Left Rear Discharge 6" Akron Electric Valve with 9323 controller. Locate: left rear discharge.	$5,977
4415-0982	6" Pump Panel Discharge 6" Akron Electric Valve with 9323 controller. Locate: [#LOC].	$5,876
4415-0983	2.5" Right Pump Panel Discharge Akron Electric Valve with 9323 controller. Location: [#LOC].	$3,017
4415-0984	2.5" Left Pump Panel Discharge Akron Electric Valve with 9323 controller. Location: [#LOC].	$3,017
4415-0985	1.5" crosslay w/2" Akron electric valve and 9323 controller. Location: [#LOC].	$2,756
4415-0986	4" Right Pump Panel Discharge w/4" Akron Electric Valve with 9323 controller. (Waterous pumps noted location to be forward lower port) Location: [#LOC]	$4,615
4415-0987	3" Right Front Hosebed Elkhart Electric Unibody Valve. Termnate with a 3"FNPT X 2.5" MNST.	$3,669
4415-0988	3" Left Front Hosebed Elkhart Electric Unibody Valve. Termnate with a 3"FNPT X 2.5" MNST.	$3,669
4415-0989	Left Front Hosebed Discharge 3" w/ 3" Elkhart Unibody Manual Valve and shall terminate with a 3"FNPT X 2.5"MNST adapter.	$2,281
4415-0991	4" Pump Panel Discharge Akron Electric Valve & Navigator 9325 to read flow, and pressure. (Waterous pumps noted location to be forward lower port). Location: [#LOC].	$5,517
4415-0992	4" Pump Panel Discharge Akron Electric Valve & Navigator 9325 (Waterous pumps noted location to be forward lower port). Location:Left Side Discharge 1.	$7,997
4415-0993	3" Left Rear Discharge Akron Electric Valve with 9323 controller. Location: [#LOC].	$3,881
4415-0994	4" waterway discharge with 4" Akron electric valve with 9323 controller.	$4,520
4415-0996	1.5" Front Bumper Discharge Akron Electric Valve with 9323 controller.	$3,134
4415-0998	4" Left Pump Panel Discharge w/3" Akron Electric Valve with 9323 controller (Waterous pumps noted location to be forward lower port) Location: [#LOC]	$3,965
4415-0999	4" Right Pump Panel Discharge w/3" Akron Electric Valve, and 9323 controller. (Waterous pumps noted location to be forward lower port) Location: [#LOC]	$3,965
4415-1000	Double 1.5" Speedlay w/2" Elkhart Electric Unibody Valve with UICS-2 CAFS Controllers.	$6,915
4415-1001	4" Right Panel Discharge w/30 Degree Droop. Include 4" Akron Electric Valve w/9323 Controller. (Waterous pumps noted location to be forward lower port) Location: [#LOC]	$4,820
4415-1003	1.5" Front Bumper Crosslay Discharge Elkhart Unibody Valve with hand wheel control.	$2,882
4415-1004	1.5" Double Speedlay with Elkhart Unibody Valves with hand wheel controls.	$4,242
4415-1005	2.5" Left Panel Discharge Elkhart Hand Wheel Control UnibodyValve w/30 Degree Droop Location: [#LOC]	$2,217
4415-1010	3" Right Panel Discharge Akron Electric Valve and 9323 Controller w/30 Degree Droop. (Waterous pumps noted location to be forward lower port). Location: [#LOC].	$3,893
4415-1011	3" Right Pump Panel Discharge Akron Electric Valve. Location: [#LOC].	$3,686
4415-1012	3" Right Front Hosebed Akron Electric Valve with 9323 controller.	$4,169
4415-1015	3" Right Pump Panel Discharge Akron Electric Valve with 9323 controller. Location: [#LOC].	$3,686
4415-1017	2.5" Front Bumper Discharge Akron Electric Valve with 9323 controller.	$3,287
4415-1018	2.5" Left Front Hose Bed Akron Electric Valve with 9323 controller.	$3,456
4415-1019	2.5" Right Front Hose Bed Akron Electric Valve with 9323 controller.	$3,456
4415-1020	Double 1.5" Speedlay w/2" Akron Electric Valves with 9323 controllers.	$5,523
4415-1021	2.5" Left Pump Panel Discharge Akron Electric Valve with 9323 controller and 30 degree droop. Location: [#LOC].	$3,368
4415-1022	2.5" Right Pump Panel Discharge Akron Electric Valve with 9323 controller and 30 degree droop. Location: [#LOC].	$3,368
4415-1023	4" Deck Gun Discharge Outlet with 6" Electric Akron Valve and plumbing. Requires 4" Monitor.	$5,899
4415-1024	4" Right Pump Panel Discharge w/3" Akron Electric Valve, and 9323 controller include 30 degree droop. (Waterous pumps noted location to be forward lower port) Location: [#LOC]	$4,272
4415-1025	5" Right Pump Panel Discharge w/3" Akron Electric Valve. Location: [#LOC].	$4,682
4415-1026	5" Pump Panel Discharge with 4" Akron Electric Valve with 9323 controller. Location: [#LOC].	$5,152
4415-1027	2.5" Front Bumper Discharge Akron Manual Valve. Location; 2.5" front bumper discharge officer side through center of the officer side front bumper.	$1,836
4415-1031	4" Deck Gun Discharge 6" Electric Akron Valve with 9323 controller and plumbing. Requires 4" Monitor.	$5,899

4415-1032	3" Left Panel Discharge Top Mount Akron Electric Valve with 9323 controller. Location: [#LOC]	$3,788
4415-1033	3" Left Panel Discharge Top Mount Akron Electric Valve w/9323 controller, and 30 Degree Droop (Waterous pumps noted location to be forward lower port) Location: [#LOC]	$4,097
4415-1034	Triple Speedlay (1) 2.5" and (2) 1.5" with Akron Manual Valve. 2.5" in top location in bed number 1.	$3,990
4415-1035	1.5" Rear Driver Side Preconnect Akron gear operator valve hand wheel control for Rear Mount.	$1,988
4415-1036	2.5" Right Pump Panel Discharge Akron Manual Valve to be used with Wetside - under tank design only. Location: [#LOC].	$2,188
4415-1038	2.5" Right Pump Panel Discharge Akron Electric Valve to be used on Wetside with under tank design only. Location: [#LOC].	$4,145
4415-1039	Double Speedlay (2) 1.5" and Crosslay (1) 2.5" with Akron Manual Valve.	$4,150
4415-1040	1.5" Crosslay w/2.5" Elkart Unibody Manual Valve and plumbing Location: [#LOC]	$1,153
4415-1041	4" Pump Panel Discharge w/3" Akron Electric Valve & Navigator 9325 to read flow, and pressure. (Waterous pumps noted location to be forward lower port). Location: [#LOC].	$5,159
4415-1042	2.5" Single Speedlay with Akron manual valve outlet to terminate below speedlay tray.	$1,160
4415-1043	3" Deck Gun Discharge Elkhart Electric Unibody valve UBEC2 to pressure.	$4,394
4415-1044	3" Right Pump Panel Discharge UBEC2 Electric Valve with 30 degree droop to read pressure. Location: [#LOC]	$4,305
4415-1045	Preconnect extension (Each). The front hosebed preconnect to be extended to the rear of the hosebed area. Includes smooth plate cover. Location: second officer side hose bed preconnect is to treminate approx 10" from back edge of hosebed.	$394
4415-1048	3" Rear panel discharge with Akron electric valve and 9323 controller. For use with rear mount pump. Location [#LOC].	$3,079
4417-0000	Ground Sweep Nozzle	$1,449
4417-0001	Dual Ground Sweep Nozzles 50 GPM	$1,539
4417-0019	Fire Shop Bezel Chrome - Side Discharge/Intake	$93
4417-0020	Deck Gun Remote TFT 18" Extend-A-Gun, electric, 3" plumbing.	$3,889
4417-0021	Deck Gun Remote Ext-a-Gun 4"	$4,435
4417-0026	Automatic drain valve. For: [#LOC].	$78
4417-0030	Monitor Akron 3578 Electric 2000.	$9,612
4417-0031	Monitor Akron 3570 Manual 2000	$3,525
4417-0032	Monitor Scorpion wireless RF radio 2000 GPM	$10,787
4417-0034	Deck gun TFT 18" Extend-A-Gun, 3".	$1,940
4417-0038	Elkhart Model 8294-06 Monitor with SM-200E Nozzle. Wireless Remote control	$13,711
4417-0039	Akron DeckMaster 3440 electric 1250 GPM monitor w/stow.	$11,199
4417-0040	Akron 5177 Akromatic 2.5" master stream nozzle for an Akron 3440 DeckMaster monitor.	$1,710
4417-0041	Akron 1577 SaberMaster 2.5" Nozzle for an Akron 3440 DeckMaster monitor.	$3,269
4417-0042	An Akron tether remote control kit with a 30`cable shall be provided for an Akron 3440 monitor. Plug for the remote control to be located: [#LOC].	$1,086
4417-0043	Task Force Hurricane RC electric 1250 GPM monitor.	$12,608
4417-0044	Task Force M-ERP-NJ 2.5" master stream electric nozzle for a Hurricane RC monitor.	$1,892
4417-0045	Elkhart Stinger 8297-25 Manual 800gpm Monitor w/portable base and adapter to mount to deck gun discharge or extend-a-gun	$3,126
4417-0046	Elkhart 8500 Vulcan RF monitor with panel mounted and hand held remote controls w/adapter to mount to deck gun discharge or extender.	$6,232
4417-0047	Elkhart SM-1250E Select-O-Matic 2.5" electric nozzle.	$2,366
4417-0048	Elkhart 8598 Electrically Actuated Extender.	$2,830
4417-0051	Thread Type: All 1.5" discharges to be NPSH threads. All 2.5" inlets and discharges to be CSA (Ontario) threads as an integral part of the valve.	$619
4417-0052	Extend Specified Hosebed Preconnect up to top of hosebed. Top of preconnect to be below top of hosebed. Location: [#LOC]	$396
4417-0054	Preconnect extension (Each). The front hosebed preconnect to be extended to the rear of the hosebed area. Includes smooth plate cover. Location: [#LOC]	$394
4417-0055	Superior style cable controls for top mount.	$194
4417-0057	Ferrell Compression Fittings for all Discharge and Intake Bleeder Lines	$598
4417-0059	Extend Specified Hosebed Preconnect up to mid-point of hosebed. Center of preconnect to be approximately center of hosebed height. Location: [#LOC]	$298
4417-0062	Class 1 Cable Style Controls for Top Mount Discharges and Intakes.	$129
4417-0063	Class 1 air operated drains (upgrade) for all discharges and intakes. Includes switch on pump panel for each valve.	$121
4417-0067	Monitor 4" TFT Monsoon Manual with TFT Master Stream 2000 gpm manual Nozzle.	$6,287
4417-0068	TFT Tether Kit with 30' Cable for an TFT Monitor Location: [#LOC]	$755
4417-0073	Deck Gun TFT 12" Extend-A-Gun 3".	$1,940
4417-0075	Monitor 4" TFT Monsoon Electric with TFT Master Stream 2000 gpm electric Nozzle. Include panel mount and hand held Remote.	$14,197
4417-0078	Thread Type: All 1.5" discharges to be NPSH threads. All 2.5" inlets and discharges to be (Western Canada Fire Underwriters Association) threads as an integral part of the valve.	$805
4417-0079	9304 Akron Navitgator electric valve control. Location: All electric discharge valves IPOS.	$584
4417-0080	All 1.5" Threads to be IPT threads	$68
4417-0081	Vented caps and plugs for all discharges/intakes.	$568
4417-0082	Deck Gun Remote 12" Extend-A-Gun 3" Plumbing.	$3,889
4417-0083	Elkhart 8297F Stinger RF Monitor with Panel Mounted and Hand-Held Remote Controls w/adapter to mount to deck gun discharge or extender	$8,869
4417-0084	Task Force M-ERP-NJ 2.5" Masterstream Electric Nozzle for a Hurricane RC Monitor	$1,892

4417-0085	Thread Type: All 1.5" discharges to be NPSH threads.	$310
4417-0086	Task Force Typhoon RC Electric Monitor with 1500gpm nozzle. Include Radio Remote Control	$13,289
4417-0088	Bleeder drain valve plumbed to: [#LOC].	$113
4417-0090	Additional control for deck gun electric valve locate adjacent to the outlet.	$1,684
4417-0092	Task Force Typhoon RC Electric Monitor without nozzle. Include Radio Remote Control (Require Nozzle)	$10,666
4417-0097	Innovative Controls Push/Pull Valve Control Handles IPOS.	$49
4417-0099	Akron Wireless Deck Gun Remote Monitor Controller.	$1,554
4417-0100	Akron 3600 Wireless Remote Control.	$1,668
4417-0102	Akron DeckMaster 3440 Electric 1250gpm Monitor w/Stow. With 30' Tether controller located in pump panel operator compartment.	$11,782
4417-0107	INLET/OUTLET CONNECTION INDICATOR SYSTEM Each inlet and outlet shall be provided with an adjacent green LED pilot light and weatherproof switch with guard, the switch shall be activated when a connection to the inlet or outlet has been made to notify the pump operator the connection is complete.	$115
4417-0119	Task Force Hurricane RC Electric Monitor with a Master Stream 1250 GPM nozzle. Includes wireless Radio Remote Control.	$11,802
4417-0124	Akron 3406 Electric Riser.	$3,403
4417-0125	Deck gun TFT 18" Extend-A-Gun, 3". (MODEL XG18VL-XL) for crossfire monitor.	$1,940
4417-0127	Chrome discharge elbow 3"FNST x 2.5"MNST 30 Deg [#LOC].	$248
4417-0129	Left side 2.5" pump panel discharges on Waterous pump to be side by side. For use with Side Mount Pump Module.	$789
4417-0130	Task Force Tip Hurricane XFI-PLNJ Manual Monitor with MST-4NJ-2.5"NH Quad Stack Tips and M-R1000-NJ Automatic Nozzle.	$3,575
4417-0135	Addition Automatic drain valve. For: front bumper discharge. Loction under front bumper at lowest point.	$78
4417-0138	Officer side pump panel shall have polished stainless steel split escutcheon plates mounted in place for each discharge/intake. The escutcheon plates will be fastened in place to allow quick disassembly to permit the hinge to operate.	$235
4417-0140	Crosslay 1 valve control to electric 9313 comtroller.	$1,801
4417-0143	Lever controls to be Innovative Controls T-handle Top Mmount Valve Controls.	$39
4417-0147	Special piping run for 2.5" bumper discharge. Run piping thru back wall of center tray down low offset to officer side (approximately 1" clearance between pipe and officer side tray wall), run piping into tray approx halfway then 90 degrees up to top of gravel shield.	$180
4417-0149	Akron DeckMaster 3440 electric 1250 GPM monitor w/stow package. Include 1577 SaberMaster 2.5" Nozzle, and 3600 Wireless Remote Control. (DND OF CANADA)	$13,967
4417-0150	Manual override access hole to be supplied in officer's side pump panel to access the override on the 4" discharge .Wrench required for manual override shall be located in vicinity of access panel.	$82
4417-0153	Elkhart Cobra EXM monitor with panel mounted and hand-held remote controls w/adapter to mount to deck gun discharge or extender. Include SM-1250E nozzle	$10,851
4417-0154	Additional electric controller for discharge electric valve locate adjacent to the outlet. Locate.[#LOC].	$1,684
4417-0158	Deck Gun Discharge piping shall be extended flush with top of booster reels.	$252
4417-0159	Monitor Scorpion 8294-02 Monitor w/2000 GPM Nozzle, and ST-195 stacked tips (tips shipped loose).	$8,884
4417-0160	Thread Type: All 1.5" discharges to be NEW CHICAGO FD 1.933 x 11 1/2 threads per inch. All 2.5" inlets and intake releif valve dump pipe to be 2.99 x 7 1/2 NEW CHICAGO FD threads per inch.	$522
4417-0162	Akron DeckMaster 3440 UII CAN electric 1250 GPM monitor w/stow.	$11,199
4417-0163	Additional control for deck gun valve handwheel control locate adjacent to the outlet.	$1,399
4417-0164	Deck Gun Discharge Piping. The deck gun discharge piping shall terminate 11" above storage pan floor with a 4 bolt flange. (NOT TO AFFECT OAH W/8297 MONITOR)	$159
4417-0165	Elkhart 8500 Vulcan Monitor Hand Wheel Control.	$2,301
4417-0166	Monitor 3" TFT Monsoon Electric with TFT Master Stream 1500 gpm electric Nozzle. Include panel mount and hand held Remote.	$11,126
4417-0171	Deck Gun Pipe. The piping for the deck gun shall terminate with a 4 bolt flange.	$159
4417-0174	CAFS Compressor "auto on".	$132
4417-0178	Task Force Tip Hurricane Manual Monitor XFIH-D61A, female NPT thread for use with Manual Extend-a-gun.	$1,528
4417-0179	Task Force 2.5 Master Stream 1250 Series M-R1250-NJ Manual Nozzle	$1,344
4417-0180	Task Force Tip Hurricane XFIH- Manual Monitor with MST-4NJ-2.5"NH Quad Stack Tips and M-R1250-NJ Automatic Nozzle.	$3,575
4417-0182	TM Valve controls to be Innovative Controls T-handles with grip activitated lock.	$43
4417-0183	Monitor Scorpion 8294-02 Monitor w/2000gpm Nozzle.	$8,684
4417-0184	TM Valve controls to be Innovative Controls T-handles with grip activitated lock and cable actuators.	$160
4417-0185	Innovative Controls discharge and intake bezels with integral color code and verbiage for side mount pump panel.	$472
4417-0186	Innovative Controls discharge and intake bezels with color code and verbiage for top mount pump panel.	$304
4417-0187	Monitor Apollo Akron 3426 w/ Akron Nozzle 5160	$2,291
4417-0188	TM Valve controls to be Innovative Controls Twist-Lock handles.	$43
4417-0190	TM Valve controls to be Innovative Controls Twist-Lock handles with cable actuators.	$160

4417-0191	Ground Sweep Nozzle 20gpm. One each side under the front bumper with quick disconnect. Includes individual valve control for each.	$1,841
4417-0192	Innovative Controls discharge and intake bezels with integral color code and verbiage for rear mount pump panel.	$323
4417-0193	Extend Driver Hosebed up 16" from hosebed floor.	$396
4420-0026	Williams "75 Lb. Dry Chemical Skid Unit w/4,500 PSI Air-pack Bottle.Locate in [#LOC].	$6,294
4430-0008	Advent 30 Foam System for a Single Foam Tank	$19,530
4430-0009	Advent 60 Foam System for a Single Foam Tank	$23,218
4430-0010	Advent 120 Foam System A and B Type	$29,778
4430-0011	1600 Rockwood Around The Pump Foam System	$4,101
4430-0013	Williams 1500 Around-The-Pump foam system.	$6,959
4430-0014	Hale 2.1A FoamLogix foam system.	$6,913
4430-0015	Hale 3.3 FoamLogix foam system.	$14,686
4430-0016	5.0 Hale FoamLogix Foam System.	$16,556
4430-0017	400 Rockwood around the pump foam system.	$3,089
4430-0018	1600 Hypro/FoamPro foam system.	$8,019
4430-0019	2001 Hypro/FoamPro foam system.	$13,024
4430-0020	2002 Hypro/FoamPro foam system.	$16,600
4430-0022	Hot Shot II 150 Foam System.	$50,047
4430-0023	Hot Shot II 300 Foam System	$53,254
4430-0031	Eclipse Compressed Air Foam System 1000 GPM Manifold w/2002 FoamPro.	$77,482
4430-0032	CAFSPRO with 2.1 Foam Logix Compressed Air Foam System with 750gpm Manifold	$46,207
4430-0039	Eclipse Compressed Air Foam System 500 GPM Manifold w/2001 FoamPro	$72,251
4430-0041	WATP 500 A/B Foam System Include 1.5" Foam pick up.	$9,518
4430-0042	Advent 12 Foam System for a Single Foam Tank	$19,328
4430-0043	Advent 12 Dual Foam System for Dual Foam Tanks	$21,220
4430-0045	95 GPM Akron Foam Eductor. Location: [#LOC].	$2,123
4430-0046	125 GPM Elkhart Foam Eductor Location: [#LOC]	$2,646
4430-0047	125 GPM Akron foam eductor. Location: [#LOC].	$2,424
4430-0048	95 GPM Elkhart Foam Eductor Location: [#LOC]	$2,414
4430-0051	Advent 30 Dual Foam System for Dual Foam Tanks	$24,016
4430-0052	CAFSPRO with 3.3 Foam Logix Compressed Air Foam System with 750gpm Manifold	$58,314
4430-0053	CAFSPRO with 5.0 Foam Logix Compressed Air Foam System with 750gpm Manifold	$59,306
4430-0056	125 GPM Elkhart Foam Eductor w/air actuated foam valve Location: [#LOC]	$3,194
4430-0057	125 GPM Akron Foam Eductor w/air actuated foam valve. Location: [#LOC].	$2,843
4430-0058	Hot Shift Clutch - Required with CAFS system	$2,893
4430-0059	Eclipse Compressed Air Foam System 500 GPM Manifold w/2002 FoamPro.	$75,828
4430-0060	CAFSPRO 5.0 FoamLogix Compressed Air Foam System with 1000 GPM manifold.	$60,914
4430-0061	FoamPro 3012 foam system, hydraulics PTO driven.	$22,087
4430-0062	Advent 120 Foam System single	$27,289
4430-0063	FoamPro 3040D Foam System with elect/hyd drive.	$38,240
4430-0066	Foam Tank To Pump 1" Air/Act for Dealer install foam system.	$809
4430-0070	125 GPM Akron Simple Apparatus Foam System	$1,542
4430-0071	1500V Williams A/B Around The Pump foam system. Include A/B tanks control.	$8,562
4430-0073	1.5 Feecon Around The Pump Foam System	$4,168
4430-0075	2.0 Feecon Around The Pump Foam System	$4,290
4430-0076	Eclipse Waterous Compressed Air Foam System 1000 GPM Manifold.	$60,885
4430-0077	Waterous Advantus 6.0 Foam System	$18,633
4430-0078	Classic 140 Compressed Air Foam System. Shall include (5) Discharge outlets (1) 2.5" Left Hosebed Preconnect Discharge, (2) 1.5" Crosslay outlets, and (2) booster reels.	$40,448
4430-0079	The foam system performance shall be tested and certified in compliance with 2009 NFPA 1901.	$279
4430-0080	The balanced pressure foam system performance shall be tested and certified in compliance with 2009 NFPA 1901.	$556
4430-0081	1500 Williams Around The Pump Foam System Up Graded to 2000gpm at 3%	$2,715
4430-0085	Classic 140 Compressed Air Foam System.	$22,971
4430-0087	Advent 60 Foam System for a dual Foam Tank.	$28,314
4430-0089	The main pump manifold to have water loop for dealer installed foam system (Class A Foam System) to noted preconnects/discharges	$719
4430-0093	Venom 5.0 Hypro/Foam Pro Foam System.	$17,021
4430-0094	Advent 12 Elecrict (230) Dual Foam System for Dual Foam Tanks	$24,138
4430-0107	WATP 500 B Foam System. Includes 1.5" Foam pick-up.	$8,006
4430-0108	FRC MFA200 Class A around the pump foam system.	$2,540
4430-0109	Waterous Advantus 3.0 foam system.	$13,548
4430-0112	125 GPM Akron Foam Eductor w/manual panel mount 1/4 turn foam valves (1) for A tank, and (1) for B tank. Location: [#LOC]	$3,142
4430-0113	The foam system shall be factory tested at, minimum, maximum, and midrange.	$279
4430-0114	Eclipse Compressed Air Foam System 3" Manifold w/Advantus 6.0 Foam system.	$71,616
4430-0115	125 GPM Akron foam eductor system with air actuation for both foam eductor and foam supply valve. Location: [#LOC].	$3,568
4430-0116	FoamPro 3040 Foam System hyd drive. (FoamPro Low Flow 130gpm at 3%)	$37,886
4430-0117	1500V Williams A/B Around The Pump Foam System with Single Tank and Aux Pickup to be use for Class A or Class B foam inlet.	$9,095
4430-0118	FoamPro AccuMax 3040 Foam System hyd drive with Multi-Piont Injection, and low flow option.	$37,886
4430-0119	FoamPro AccuMax 3040 Foam System hyd drive with Multi-Piont Injection, and low flow option.	$38,262

4430-0120	1500V Williams Manual A/B Around The Pump foam system with pickup. Include manual A/B tanks control with manual .75 flush valve.	$8,613
4430-0122	1601 Hypro/FoamPro foam system.	$7,341
4430-0123	FoamPro AccuMax 3060 Foam System hyd drive with Multi-Piont Injection, Manual Override, and low flow option. Includes "Auto-Start" system.	$58,613
4430-0124	Pneumax 140-SP Silver Compressed Air Foam System to be used on Ford F550 chassis and driven off the Hale DSD Pump. Requires special DSD pump with PTO Bore and SAE "B" hydraulic drive splined.	$23,784
4430-0128	Hale SmartCAFS 5.0 FoamLogix Compressed Air Foam System with 1000 GPM manifold.	$60,443
4430-0130	Waterous 200-P PTO Platinum Compressed Air Foam System	$27,003
4430-0131	Waterous 140-P PTO Platinum Compressed Air Foam System	$26,333
4430-0132	Waterous 80-P PTO Platinum Compressed Air Foam System	$20,111
4430-0133	Darley 150 ODIN Compressed Air Foam System.	$19,614
4430-0134	FoamPro 2002ELECT/3060HYD Foam System. FoamPro 2002 system for Class A low flow, and 3060 system for high flow Class B faom. (HILLSBOROUGH COUNTY)	$47,632
4430-0135	125 GPM Akron Foam Eductor w/manual panel mount 1/4 turn foam valves. Include push/pull for foam eductor Location: [#LOC]	$2,947
4430-0136	Darley 150-PTO Compressed Air Foam System	$24,933
4432-0001	Akron 5178 Electric 2000 GPM Nozzle.	$2,232
4432-0002	Akron 5070 Manual 2000 GPM Nozzle	$1,716
4432-0003	Elkhart SM2000 Electric Nozzle	$2,218
4432-0009	Hot Shot Ratio Controller 2" Discharge. Plumbed to: [#LOC].	$2,045
4432-0010	Hot Shot Ratio Controller 2.5" Discharge. Plumbed to: [#LOC].	$2,104
4432-0011	Hot Shot Ratio Controller 3" Discharge. Plumbed to: [#LOC].	$2,171
4432-0012	Advent Ratio Controller 2" Discharge. Plumbed to: [#LOC]	$1,673
4432-0013	Advent Ratio Controller 2.5" Discharge. Plumbed to: [#LOC]	$1,676
4432-0014	Advent Ratio Controller 3" Discharge. Plumbed to: [#LOC]	$1,701
4432-0015	Advent Ratio Controller 4" Discharge. Plumbed to: [#LOC]	$1,885
4432-0016	Advent Ratio Controller 5" Discharge. Plumbed to: [#LOC]	$3,437
4432-0019	Foam Pro Remote Start Switch	$679
4432-0020	Eclipse 1.5"/3.0" Compressed Air Foam System Discharge Kit. Location: [#LOC].	$22
4432-0022	1.5" Compressed Air Foam System Discharge Kit Location: [#LOC]	$326
4432-0023	2.0" Compressed Air Foam System Discharge Kit. Location: [#LOC].	$329
4432-0024	2.5" Compressed Air Foam System Discharge Kit. Location: [#LOC].	$332
4432-0025	3.0" Compressed Air Foam System Discharge Kit Location: [#LOC]	$371
4432-0026	3" Deck Gun Discharge Eclipse Compressed Air Foam System	$3,630
4432-0027	3" Deck Gun Compressed Air Foam System	$3,943
4432-0028	Pump, foam transfer, 15 GPM, 12 volt, mounted in vehicle body. Activation switch operated from driver's side pump panel ARFF.	$2,004
4432-0036	A/B Hypro/FoamPro manual foam selector.	$2,190
4432-0037	A/B Class 1 manual foam selector.	$3,162
4432-0045	Hot Shift Clutch	$2,979
4432-0052	Remote foam tank fill, FoamPro's "Power Fill".	$572
4432-0054	Akron Quick Disconnect Foam Pickup Tube on Driver's Side Pump Panel for Eductor. Located on: [#LOC].	$460
4432-0055	Elkhart Quick Disconnect Foam Pickup Tube on Driver's Side Pump Panel for Eductor Located on: [#LOC]	$653
4432-0056	Hale EZ-Fill foam system for a single foam tank. Includes clear hose wand (shipped loose). Controller and connection port located [#LOC].	$2,691
4432-0057	Hale EZ-Fill foam system for dual foam tank. Includes clear hose wand (ship loose). Controller and connection port located [#LOC].	$3,036
4432-0058	Akron quick-disconnect foam pickup tube on officer's side pump panel for eductor. Located on: [#LOC].	$460
4432-0059	Elkhart Quick Disconnect Foam Pickup Tube on Officer's Side Pump Panel for Eductor Located on: [#LOC]	$653
4432-0060	Label for ATP foam systems.	$33
4432-0061	FoamPro foam system refill. Includes clear hose wand (ship loose). Controller and connection port located [#LOC].	$3,041
4432-0063	Hale FoamLogix air actuated A/B selector.	$3,578
4432-0064	Hypro FoamPro electric actuated A/B selector.	$3,358
4432-0065	3" Deck Gun CAFSPRO Compressed Air Foam System.	$6,289
4432-0066	Additional 3/4" Foam Tank Valve for 95 Eductor and Dual Foam Cells	$443
4432-0070	Hot Shot Ratio Controller 4" Discharge. Plumbed to: [#LOC].	$2,897
4432-0071	Foam Pickup 2" on Driver's Side Pump Panel for 3040D Foam System with Pickup Tube.(Montreal only)	$1,065
4432-0072	Foam Tank Fill 1.5" Air Act for a 3040D Foam System.(Montreal only)	$614
4432-0074	.375 Foam Maniflod Drain	$129
4432-0075	FoamPro Advanced Digital Controller "auto start".	$132
4432-0076	Foam Pickup 2" on Officer's Side Pump Panel for 3040D Foam System with Pickup Tube.(Montreal only)	$1,065
4432-0077	Foam Pickup 10 feet with 1.0 PVC Clear Spiraflex Hose IPOS	$231
4432-0078	Foam tank drain plumbed to side panel with valve and 3/4" male garden hose connection. To allow filling of remote foam unit and pails from tank.	$831
4432-0079	A/B Class 1 Manual Foam Selector	$3,162

4432-0080	Special CAFS/FOAM Manifold for (4) preconnects, Deck Gun, and 3" Right Rear discharge.	$5,814
4432-0082	Foam Pickup 2" on Side Pump Panel. With Manual valve and Pickup Tube.	$774
4432-0083	Deck Gun Foam Tank To Pump Connection Provide a Manual 1.5" Valve Locate Next to Deck gun outlet.	$776
4432-0089	CAFS Manual Air Valve to be .3/4" Valve in place of standard.	$133
4432-0090	CAFS/Foam System Operation Label "Operate only (2) 1 3/4" Discharges or (1) 2 1/2" at a time"	$177
4432-0091	Special design 5" foam/water manifold with check valves.	$3,701
4432-0092	FoamPro Remote Start/Stop in cab.MultiFlo Interface, and Dual Injection control located on operator panel.	$6,834
4432-0093	Hot Shot Ratio Controller 5". Plumbed to: [#LOC].	$2,953
4432-0094	Waterous Electric Actuated A/B Selector.	$3,213
4432-0096	Hale Foam Logix Remote Start Switch	$715
4432-0097	.75" Foam Manifold Drain with 1/4 turn valve.	$443
4432-0098	Eclipse Waterous TC20 T-Case W/Compressed Air Foam System. For a S1OOD Waterous pump.	$51,304
4432-0099	Foam System Plumbed to [#LOC].	$290
4432-0100	2.0" Compressed Air Foam System Discharge Kit with Electric actuated 1/2" valve. Location: [#LOC].	$361
4432-0101	2.5" Compressed Air Foam System Discharge Kit with Electric actuated 3/4" valve. Location: [#LOC].	$365
4432-0104	Hale Manual Single Foam Flush System.	$1,120
4432-0105	A/B Foam Selector locate Driver side walk way recess in box on diamond plate panel at front of module.	$168
4432-0108	Hot Shot Ratio Controller 5" Discharge with adjustable metering valve. Plumbed to: [#LOC]	$2,953
4432-0109	Hot Shot Ratio Controller 3" Discharge with adjustable metering valve. Plumbed to: [#LOC]	$2,171
4432-0110	Hot Shot Ratio Controller 2" Discharge with adjustable metering valve. Plumbed to: [#LOC]	$2,045
4432-0113	Foam Intake Test Port Locate on the intake side of pump between the strainer and the pump, bulkhead fitting is to be on operator pump panel.	$93
4432-0114	Foam testing. The foam system shall be calibrated for 1 X 3 Thunderstrom foam AR-AFFF concentrate. The foam propotioning system shall provide .25%, .5%, 1%, and 3% foam solutions within the allowable concentration ranges required in NFPA #1901. Each percentage shall be tested at a high and low flow and a revit shall be install at mid point..	$1,994
4432-0115	Foam ready manifold for a Hale FoamLogix or a FoamPro system with 3" plumbing feeding the manifold so the dealer can install the Hale or FoamPro manifold.	$845
4432-0117	1.5" FNST Hydro- Foam Aux Foam pickup. The 1.5" FNST foam inlet fitting shall be located on officer side pump panel with a electic over air control valve. And be control at the operator panel.	$1,342
4432-0118	Foam Strainer Pump Panel Mount with 1" connection ports and 2.5" NST cap. (IPOS strainer for foam system.)	$1,028
4432-0119	Foam Strainer Pump Panel Mount with 1" connection ports and 2.5" NST cap. (For Foam Refill)	$1,028
4432-0121	Foam Tank Supply/Flush 1" valves will be electric control operated through the V-MUX system. The flush valve to be located as close to foam tank supply valve as possible. A manual flush drain .75" valve will be located under the officer's side running board.	$1,006
4432-0122	A 1.50" x 10' reinforced concentrate hose and stinger shall be provided with NST threads to connect to the foam inlet as (shipped loose) for auxiliary foam operations.	$273
4432-0123	Eclipse 1.5"/3.0" Compressed Air Foam System Discharge Kit Location: [#LOC]	$521
4432-0125	6" Ratio Controller for Hot Shot II System. Include metering valve. Location: [#LOC].	$3,794
4432-0134	Eclipse 1.5"/3.0" Compressed Air Foam System Discharge Kit. Location: [#LOC].	$290
4432-0135	CAFS Audible w/light Low Air Alarm shall be tied into the CAFS air system. If it drop below 90PSI the alarm aviate.	$346
4432-0137	Hot Shot Ratio Controller 6" Discharge with adjustable metering valve. Plumbed to: [#LOC]	$4,092
4432-0138	Hot Shot Ratio Controller 2.5" Discharge with adjustable metering valve. Plumbed to: [#LOC]	$2,944
4432-0151	FoamPro aux foam fill kit. Include check valve, level sensor, placard and camlok connection.	$711
4432-0152	1.5" Foam Tank to pump Electric/Air Actuated. With a guard switch cover adjacent to the foam control display.	$988
4432-0153	CAFS system water drain shall be extended out to pump panel.	$225
4432-0159	CAFs system drains shall be extended to the officer's side pump panel area.	$338
4432-0160	3" Compressed Air Foam System Discharge Kit with Electric actuated 3/4" valve. Location: [#LOC]	$421
4432-0161	1.5" Compressed Air Foam System Discharge Kit with Electric actuated 1/2" valve. Location: [#LOC]	$360
4432-0162	6" High Flow Ratio Controller for Hot Shot II System. Includes metering valve. Location: [#LOC].	$3,793
4432-0163	1.5" Foam Tank to pump Air Actuated. With a guard switch cover adjacent to the foam control display.	$987
4432-0164	Waterous Electric Actuated A/B Selector. A to be plumb to the foam tank, and B to be plumb to the left pump panel for an aux foam pick-up.	$3,213
4432-0165	Special design foam/water manifold to allow dealer supplied foam system to be plumbed to crosslay 1, crosslay 2 and rear discharge so they are foam ready.	$3,701
4432-0166	Special design 4" foam manifold with check valve to prevent foam from back flowing into the water pump. Include 4" Check valve with 4" plumbing, and drain.	$1,622
4432-0167	FoamPro 1/2" Line Controller plumbed to [#LOC].	$6,935
4432-0168	Auto on power-up mode, which automatically come on with pump in gear.	$132
4432-0169	Advent Ratio Controller 2" Discharge. Special Orifice size .10, .250, .500, 1.0, and 3.0% Plumbed to: [#LOC]	$1,673

4432-0170	Advent Ratio Controller 2.5" Discharge. Special Orifice size .10, .250, .500, 1.0, and 3.0% Plumbed to: [#LOC]	$1,676
4432-0171	Advent Ratio Controller 3" Discharge. Special Orifice size .10, .250, .500, 1.0, and 3.0% Plumbed to: [#LOC]	$1,701
4432-0172	Advent Ratio Controller 4" Discharge. Special Orifice size .10, .250, .500, 1.0, and 3.0% Plumbed to: [#LOC]	$1,885
4432-0173	An Elkhart quick-connect foam outlet with pick-up tube assembly permits foam from on-board tank supply or to a 5 gal. pails/buckets. For portable eductor. Install one on each side pump panel.	$1,760
4432-0176	An Elkhart quick-connect foam outlet with pick-up tube assembly permits foam from on-board tank supply or to a 5 gal. pails/buckets. For portable eductor. Location: [#LOC].	$882
4432-0177	FoamPro 3/4" Line Controller plumbed to [#LOC].	$6,935
4432-0178	Foam tank fill 1"electric line controllert for a foam system.	$831
4432-0179	A Elkhart quick-connect, foam outlet with pick-up tube assembly permits foam from on-board tank supply or to a 5 gal. pails/buckets. For portable eductor. Location: [#LOC].	$758
4432-0180	Foam Flush with 1/4" valve. Locate inside driver side upper pump access door, rearward.	$443
4432-0182	Extended warranty for Waterous CAFS compressor - 4 Years in addition to the standard 1 year warranty (parts only).	$2,590
4432-0183	Hinged stainless steel switch guard cover for foam system air control switch Location on pump operator panel.	$113
4432-0185	Foam Flush System.	$106
4432-0187	Addition Foam Flush System. A 3/4" valve with garden hose bib connection mounted in pump compartment (1) for 2002 and (1) for 3060 system. They will be plumb to the foam supply line for flushing of the system. A check valve prevents water from entering the foam tank when the system is not being flushed.	$408
4432-0188	Aux 2" foam system intake with swing handle. Locate to be driver side pump panel.	$1,072
4432-0189	CAFS Compressor "Auto On".	$132
4432-0190	.75" Foam Manifold Drain with lift lever 1/4 turn valve.	$303
4432-0191	FoamPro off-board pickup. Includes clear hose wand (ship loose). Controller and connection port located [#LOC].	$3,212
4432-0193	Foam ready Manifold for a Hale Foam Logix or a Foam Pro system- plumbed to front jumpline , bottom 1.75" speedlay and officer side 2.5" discharge. W/3" plumbing.	$1,898
4432-0196	A CAFS Compressor RPM interlock indicator light, and label shall be on the pump operator panel. Indicator light will come on when engine RPM is to high to engage CAFS PTO.	$73
4435-0001	Class 1 Intelli-Tank water tank level gauge. On pump panel.	$473
4435-0002	Class 1 Intelli-Tank foam tank level gauge. On pump panel.	$489
4435-0003	Class 1 Intelli-Tank/Whelen 500 LED water tank level gauge package. Location of Whelen 500 tank level lights: [#LOC].	$3,827
4435-0004	Sight Tube Water Tank Level Gauge. Located driver's side front of body.	$487
4435-0005	Innovative Controls 5 Water Tank Level Gauge	$445
4435-0006	Innovated Contols 5 Foam Tank Level Gauge	$694
4435-0007	Class 1 Water Bar graph style Tank Level Gauge.	$744
4435-0008	Class 1 foam Bar graph style Tank Level Gauge.	$985
4435-0009	Fire Research TankVision model WL2600 Class A foam tank level gauge.	$915
4435-0010	Fire Research TankVision model WL2000 water tank level gauge.	$796
4435-0011	Fire Research TankVision model WL2700 B foam tank level gauge.	$914
4435-0012	Pump overheat indicator.	$352
4435-0013	4.5" Class 1 compound pressure gauge (30-0-600 PSI).	$187
4435-0014	Dual Read 4.5" Pressure Gauge (30-0-600 psi/100-0-4000 KPA).	$280
4435-0015	2.5" Class 1 compound pressure gauge (30-0-600). Discharge(s): [#LOC].	$134
4435-0016	Dual Read 2.5" Pressure Gauge (30-0-600 psi/100-0-4000 KPA). Discharge: [#LOC].	$189
4435-0018	Dual Read 3.5" Pressure Gauge (30-0-600 psi/100-0-4000 KPA). Discharge: [#LOC]	$257
4435-0019	3.5" Class 1 compound pressure gauge (30-0-600). Discharge: [#LOC].	$161
4435-0020	MC Products gauge heater line controls and strips for 4 gauges.	$720
4435-0021	Gauge heater strips, additional (EA).	$137
4435-0022	6" NoShok pressure gauge (30-0-600).	$653
4435-0023	4" NoShok master pressure gauges (30-0-600).	$199
4435-0024	6" Class 1 compound pressure gauge (30-0-600).	$643
4435-0025	Flowminder Super System. Discharge: [#LOC].	$2,657
4435-0026	Flowminder System with Totalizer. Discharge: [#LOC].	$1,718
4435-0027	Flow Meter Value System. Discharge: [#LOC].	$1,577
4435-0030	Transmission temperature gauge.	$243
4435-0031	Pump hourmeter on pump operator's panel.	$151
4435-0033	Ammeter gauge on pump operator's panel.	$276
4435-0034	Fuel level gauge on pump operator's panel.	$334
4435-0035	Enfo III System on Pump Operator's Panel	$1,007
4435-0036	Engine gauge package at the pump operator's panel.	$697
4435-0038	Class 1 Engine Status Center on Pump Operator's Panel	$1,653
4435-0040	FRC Tachplus engine monitoring display.	$1,355
4435-0047	Class 1 Intelli-Tank water tank level gauge, additional. Location: [#LOC].	$543
4435-0049	Class 1 tank level water LED graph gauge, additional. Location: [#LOC].	$744
4435-0050	FRC Tank Level Water TankVision Gauge, Additional. Location: [#LOC].	$506
4435-0051	Innovated Controls 5 Light Tank Level Water Gauge Additional Location: [#LOC]	$664
4435-0052	Class 1 Tank Level Water Mini Gauge Additional. Location: [#LOC].	$497

4435-0053	FRC Tank Level Water TankVision model WLA205-A00 Mini Gauge. Location: [#LOC].	$378
4435-0054	Innovative Controls 5 Light Tank Level Water Mini Gauge. Location: [#LOC].	$519
4435-0055	Class 1 Tank Level Intelli Foam Gauge Additional. Location: [#LOC].	$543
4435-0056	Class 1 Tank Level Foam Mini Gauge Additional Location: [#LOC]	$497
4435-0057	FRC Tank Level A Foam Tank Vision model WLA265-A00 Mini Gauge, Additional. Location: [#LOC].	$453
4435-0058	FRC Tank Level B Foam Tank Vision model WLA205-A00 Mini Gauge Location: [#LOC]	$453
4435-0059	Innovated Controls Tank Level Foam Mini Gauge Additional Location: [#LOC]	$519
4435-0063	Duplex Master Gauge for CAFS or Industrial Foam Systems.	$502
4435-0064	FRC Insight Ultimate model FPA400 combination pressure/flow gauge. Location: [#LOC].	$2,003
4435-0065	2.5" NoShok pressure gauge (30-0-600). For: [#LOC].	$145
4435-0066	IC5/Whelen 500 Water Tank Level Gauge Package Location of Whelen 500 Tank Level Lights: [#LOC]	$3,799
4435-0067	Class 1/Whelen PSTank Water Tank Level Gauge Package. Location of Whelen PSTank Strip-Lights: [#LOC].	$1,803
4435-0068	IC5/Whelen PSTank Water Tank Level Gauge Package Location of Whelen PSTank Strip-Lights: [#LOC]	$1,775
4435-0069	Class 1 ENFO IV system on pump operator's panel.	$902
4435-0070	Fire Research TankVision model WL2600 Class A and WL2700 Class B foam tank level gauges.	$1,823
4435-0071	FRC Tank Vision model WLA205-A00 Tank Level A and B Foam Gauges Location: [#LOC]	$902
4435-0072	Fire Research Tank Vision Water Tank Level Gauge with Automatic Tank Filling System model ATA400 Location: [#LOC]	$2,788
4435-0074	FRC Water Tank Level Gauge with Driver for Spartan Chassis only.	$1,059
4435-0075	Ashcroft 6" dry master intake and discharge gauges.	$558
4435-0076	Ashcroft 3.5" dry discharge gauges. Provide for each discharge.	$1,410
4435-0081	Audible and visual indicators on driver side pump panel. (1) audible/visual indicator for high engine temp and low oil pressure and (1) audible/visual for high trans temp.	$277
4435-0083	Innovative Controls 10 LED SL series water tank level gauge. On pump panel.	$484
4435-0084	Innovative Controls 10 LED series foam tank level gauge. On pump panel.	$694
4435-0085	Innovative Controls 10 LED SL series tank level water gauge, additional. Location: [#LOC].	$664
4435-0086	Innovative Controls 10 LED series Tank Level Water Mini Gauge. Location: [#LOC].	$519
4435-0087	Innovative Controls IC 10 LED SL series Tank Level Foam Mini Gauge Additional. Location: [#LOC].	$519
4435-0088	IC 10 LED SL series/Whelen 500 water tank level gauge package. Location of Whelen 500 tank level lights: [#LOC].	$3,799
4435-0089	IC 10 LED SL series/Whelen PSTank water tank level gauge package. Location of Whelen PSTank Strip Lights: [#LOC].	$1,775
4435-0090	Additional PSTank Level Strip-Light. Located: [#LOC].	$432
4435-0092	2.5" Class 1 compound pressure gauge (30-0-400). Discharge: [#LOC].	$134
4435-0093	3.5" Class 1 pressure gauge (30-0-400). Discharge: [#LOC].	$161
4435-0094	Class 1 4-1/2" compound pressure gauge (30-0-400 PSI).	$187
4435-0099	Flow Meter Value System. Discharge: right side discharge 4	$1,577
4435-0100	Flow Meter Value System. Discharge: left side discharge 4	$1,577
4435-0101	2.5" Span Pressure Gauge (30-0-600). Discharge: [#LOC].	$128
4435-0102	3.5" Span Pressure Gauge (30-0-600). Discharge: [#LOC].	$156
4435-0103	4.5" Span Pressure Gauge (30-0-600 PSI).	$181
4435-0104	MC Series 2000 4 Light Water Tank Level Gauge	$626
4435-0105	MC Series 2000 4 Light Series Foam Tank Level Gauge	$787
4435-0106	Dual Scale 3.5" Pressure Gauge 0-400 PSI / 100-2800 KPA. Replaces Standard	$311
4435-0107	Primer motor master disconnect cut-off switch. Locate on pump panel.	$208
4435-0108	Digital Pressure Gauge IPO Duplex Gauge	$800
4435-0109	2.5" Class 1 Pressure Gauge (30-0-600). IPO Duplex	$134
4435-0110	Pump Overheat Gauge Indicator with Audible Alarm	$449
4435-0111	MC Series 500 4 LED Series Water Tank Level Gauge	$743
4435-0112	Class 1 Pressure 4.5" Gauge (30-0-300 PSI)	$187
4435-0113	FRC TankVision/Whelen PSTank water tank level gauge package. Location of Whelen PSTank Strip-Lights: [#LOC].	$2,392
4435-0114	Digital CAFS CFM Flow Meter	$2,031
4435-0115	2.5" NoShok Pressure Gauge (-30-0-600 PSI/100-0-4000KPA). For: [#LOC].	$162
4435-0116	4" NoShock Dual Read Pressure Gauge 30-0-600PSI/100-0-4000KPA	$211
4435-0117	FRC Tank Level Foam Tank Vision Gauge Additional Location: [#LOC]	$574
4435-0118	4" NoShock Dual Read Pressure Gauge 30-0-400PSI/100-0-2800KPA	$211
4435-0119	2.5" NoShok Pressure Gauge (0-400 PSI/-0-2800KPA) For: [#LOC]	$162
4435-0120	Duplex Master Gauge (0-400 PSI) for CAFS or Industrial Foam Systems.	$502
4435-0122	Fire Research Tank Vision model WL2000 Water Tank Level Gauge w/an audible alarm low level buzzer shall be installed. The buzzer shall sound when the tank volume indicator drops to 1/4 tank.	$949
4435-0123	FRC Insight model FPA410 Ultimate Pressure Gauge LPM/KPA Location: [#LOC]	$2,003
4435-0124	6" Class 1 Compound Pressure Gauge (30-0-400 PSI).	$630
4435-0125	Class Digital Pressure Gauge Discharge: [#LOC]	$800
4435-0126	Digital Master Pressure Gauge	$763
4435-0127	3.5" Span Pressure Gauge (0-400). Discharge: [#LOC]	$164
4435-0128	Dual Read 2.5" Span Pressure Gauge (0-300 psi/0-2050KPA). Discharge: [#LOC]	$180
4435-0129	Dual Read 6.0" Span Pressure Gauge (30-0-400 psi/100-0-2800KPA)	$367

4435-0130	FRC Insight model FPA400 Ultimate Master Flow Gauge	$1,545
4435-0131	2.5" Class 1 Pressure Gauge (0-300). Discharge: [#LOC]	$142
4435-0133	FRC/Whelen 500 Water Tank Level Gauge Package Location of Whelen 500 Tank Level Lights: [#LOC]	$3,764
4435-0134	FRC Foam Tank Level Gauge "Class B Foam" with Driver for Spartan Chassis only.	$1,194
4435-0135	Class 1 Intelli/Whelen PSTank Water Tank Level Gauge Package Location of Whelen PSTank Strip-Lights: [#LOC]	$2,267
4435-0139	Span Pressure 4" Gauge (0-400 PSI)	$187
4435-0140	Span Master Intake/Pressure 4" 50/50 Gauge (30-0-300)	$313
4435-0147	Innovative Controls 14 LED SL series Water Tank Level Gauge	$491
4435-0148	Innovative Controls 14 LED SL series Foam Tank Level Gauge	$540
4435-0149	IC 14 LED SL series/Whelen 500 Water Tank Level Gauge Package Location of Whelen 500 Tank Level Lights: [#LOC]	$3,830
4435-0151	4.5" Class 1 Pressure Gauge (30-0-600) Black Face w/White letters.	$199
4435-0152	2.5" Class 1 Pressure Gauge (30-0-600). Discharge with Black Face and White Letters: [#LOC]	$142
4435-0154	Class 1 Flowminder System with digital totalizer readout. Discharge: [#LOC]	$1,451
4435-0155	Dual Read 4.5" Span Pressure Gauge (30-0-600 psi/100-0-4000 KPA)	$280
4435-0156	Class 1 Intelli-40 Tank Water Tank Level Gauge with Blue LED's.	$707
4435-0157	Class 1 Intelli-40 Tank Foam Tank Level Gauge with Red LED's.	$676
4435-0158	6" Span Pressure Gauge (30-0-600)	$648
4435-0159	Dual Read 2.5" Pressure Gauge (30-0-400 psi/100-0-2800KPA). Discharge: [#LOC]	$189
4435-0160	Transmission Temperature Gauge with light and a buzzer alarm for audible warning.	$348
4435-0161	Dual Read 4.5" Pressure Gauge (30-0-400 psi/100-0-2800 KPA)	$280
4435-0162	IC10/Whelen M6 LED Water Tank Level Gauge Package Location of Whelen M6 LED Tank Level Lights: [#LOC]	$3,934
4435-0174	Sight Tube Water Tank Level Gauge. Located on driver's pump panel.	$487
4435-0175	Duplex Master Gauge (0-600 PSI) for CAFS or Industrial Foam Systems.	$575
4435-0177	Innovated Controls 14 LED SL series Tank Level Water Gauge Additional Location: [#LOC]	$688
4435-0178	Engine gauge package at the pump operator's panel.	$803
4435-0179	Deluxe engine gauge package with fuel, and transmission temp. gauge built into the tach gauge display at the pump operator's panel.	$917
4435-0180	2.5" Pressure Gauge Dual Read (0-400 PSI/-0-2700KPA) . Discharge: [#LOC]. Color: [#COL].	$237
4435-0181	4.5" Pressure Gauge (30-0-400 psi/100-0-2758 KPA). Color: [#COL].	$300
4435-0182	FRC Insight model FPA412 Ultimate Pressure Gauge LPM/KPA with back lighting Location: [#LOC]	$2,160
4435-0183	Sight Tube Water Tank Level Gauge with Indicator. Located inside pump compartment on driver's side as high/low as possible.	$487
4435-0184	2.5" NoShok pressure gauge (0-400). For: [#LOC].	$145
4435-0185	4" NoShok master pressure gauges 30-0-400PSI.	$244
4435-0186	Class 1 Tank Level Intelli 40 Water Gauge Additional Location: [#LOC]	$779
4435-0187	Class 1 Intelli-40 Tank Water Tank Level Gauge with Red LED's.	$725
4435-0190	IC10 Water with (1) Whelen PSTank Water Tank Level Gauge. Location of Whelen PSTank Strip-Lights: Officer side rear of front cab door.	$1,344
4435-0191	Dual Scale 3.5" Pressure Gauge 0-400 PSI / 100-2800KPA.. Discharge: [#LOC].	$261
4435-0193	2.5" Class 1 compound pressure gauge (0-400). Discharge: [#LOC].	$134
4435-0196	2.5" Waterway Pressure Gauge Dual Read (30-0-600 psi/100-0-4140 KPA). Discharge: [#LOC]. Color: [#COL].	$190
4435-0198	3.5" Class 1 pressure gauge (0-400). Discharge: [#LOC].	$164
4435-0199	Class 1 Intelli-40M Tank Water Tank Level Gauge.	$725
4435-0200	2.5" Class 1 pressure gauge (0-600). Discharge: [#LOC].	$131
4435-0201	Digital Master Pressure Gauge Located in cab.	$763
4435-0202	4.5" Class 1 Discharge pressure gauge (0-600 PSI).	$134
4435-0203	Additional Whelen 500 Tank Level Lights. Located: officer rear.	$863
4435-0205	3.5" LED Class 1 compound pressure gauge (30-0-400). Discharge: [#LOC]. Color: [#COL].	$239
4435-0206	4.5" LED Class 1 compound pressure gauge (30-0-400). Color: [#COL].	$240
4435-0209	2.5" LED Class 1 compound pressure gauge (30-0-400). Discharge: [#LOC]. Color: [#COL].	$235
4435-0210	PSTank Level Strip-Light Pair Located: [#LOC] (Chassis only option require sale codes for gauge and driver)	$865
4435-0211	2.5" NoShok pressure gauge (30-0-600). Non-liquid filled. For: [#LOC].	$145
4435-0212	Generator hourmeter on officer side rear compartment.	$151
4435-0213	Class 1 3-1/2" compound pressure gauge (30-0-400 PSI). Master intake and discharge gauges.	$326
4435-0214	IC10 Water with (1) Whelen PSTank Water Tank Level Gauge. Location of IC10 LED tank level gauge on operator panel. Location of Whelen PSTank Strip-Lights: Officer side rear of body facing rearward.	$1,344
4435-0215	Class 1 4-1/2" compound pressure gauge (30-0-400 PSI). Locate Auto Fill Inlet.	$187
4435-0216	Class 1 Intelli-Tank water tank level gauge mounted on the rear of the body. Optimize mounting position on rear body using space not allocated by other equipment unless otherwise specified.	$473
4435-0217	Duplex 4.5" Dual Read Master Gauge (0-600 psi/0-4000KPA) for CAFS or Industrial Foam Systems.	$502
4435-0218	6" LED Backlit compound pressure gauge (30-0-400). Color: [#COL].	$527
4435-0219	Water pump digital water temperature gauge.	$344
4435-0221	Class 1 Intelli-40M Tank Foam Tank Level Gauge with red back ground.	$725
4435-0222	Class 1 Intelli-40M Tank Foam Tank Level Gauge with green back ground.	$725

4435-0223	Class 1 2.5" LED Backlit compound pressure gauge (30-0-400) package. Provide for each discharge. (SPECIAL COLOR INFO IN FILE)	$2,581
4435-0224	3.5" Class 1 pressure gauge (0-400). w/Class 1 Logo. Discharge: [#LOC].	$160
4435-0225	Gauge heater strips, shall extend the full length of the gauge line. (Officer side discharge gauge lines will require 2 per line)	$118
4435-0226	DEF level gauge on pump operator's panel.	$334
4435-0227	Innovative Controls 10 LED series foam tank level gauge. In R2 compartment.	$694
4435-0229	2.5" LED Class 1pressure gauge (0-300). Discharge: [#LOC]. Color: [#COL].	$190
4435-0231	Class 1 Tank Level Intelli 40M Water Gauge Additional Location: [#LOC]	$723
4435-0232	4.5" LED Class 1 compound pressure gauge (30-0-300). Color: [#COL].	$308
4435-0233	Single Read 2.5" Thuemling Pressure Gauge (0-2800KPA. Location: One (1) for each discharge outlet.	$1,322
4435-0234	Single Read 4.5" Thuemling Pressure Gauge (100-0-4000 KPA) (1) master intake and, (1) master discharge gauges.	$544
4435-0236	Ashcroft 6" dry master intake and discharge gauges. (30-0-300)	$697
4435-0237	Ashcroft 3.5" dry discharge gauges. Provide for each discharge. (0-300)	$1,410
4435-0240	Innovative Controls 10 LED SL series tank level foam gauge, additional. Location: [#LOC].	$694
4435-0241	Innovative Controls 10 LED series foam tank level gauge with a bright yellow easy to read graphics overlay. On pump panel.	$693
4435-0242	Sight Tube Water Tank Level Gauge. Located on driver's side adjacent to pump operator panel.	$486
4435-0243	4" Innovative Controls Brass Case Nite-Glo Master Pressure Gauges with Bezel. Intake 30-0-400, and Discharge 0-400.	$853
4435-0244	2.5" Innovative Controls brass case pressure gauge (0-400) with color code bezel.	$155
4435-0246	2.5" Innovative Controls stainless steel case pressure gauge (0-400) with color code bezel.	$135
4435-0247	4" Innovative Controls stainless steel case master pressure gauges with bezel. Intake 30-0-400, and discharge 0-400.	$385
4435-0248	2.5" Innovative Controls stainless steel case dual read pressure gauge (0-2750KPA/0-400PSI) with color code bezel.	$135
4435-0249	4" Innovative Controls stainless steel case master pressure gauges with bezel. Intake 30-0-400, and discharge 0-400, dual read KPA/PSI.	$385
4435-0250	2.5" Innovative Controls brass case pressure gauge (0-400) with color code bezel.	$155
4435-0251	Innovative Controls SL Plus series water tank level gauge with E-One logo at the bottom.	$572
4435-0252	Innovative Controls SL Plus series foam tank level gauge (foam tank A).	$572
4435-0253	Innovative Controls SL Plus series foam tank level gauge (foam tank B).	$572
4435-0254	4" Innovative Controls brass case master pressure gauges with bezel. Intake 30-0-400, and discharge 0-400.	$574
4435-0255	4" Innovative Controls brass case master pressure gauges with bezel. Intake 30-0-400, and discharge 0-400, dual read KPA/PSI.	$566
4435-0257	Innovative Controls SL Plus series tank level water gauge, additional. Location: [#LOC].	$587
4435-0258	Addition 4" Innovative Controls stainless steel case master pressure gauges 0-400. Locate driver side pump panel.	$223
4435-0261	4" Innovative Controls stainless steel case master pressure gauges with bezel. Intake 30-0-400, and duplex discharge 0-400 for CAFS and Industrial applications.	$1,305
4435-0262	2.5" Innovative Controls Nite-Glo brass case pressure gauge (0-400) and color code bezel with blue light gauge illumination.	$308
4435-0263	2.5" Innovative Controls Nite-Glo brass case pressure gauge (0-400) and color code bezel with red light gauge illumination.	$308
4435-0264	FRC TankVision/FRC Maxvision water tank level gauge package. Location of FRC Maxvision Strip-Lights: each side of cab towards rear	$2,490
4435-0266	2.5" Innovative Controls Nite-Glo brass case pressure gauge (0-400) and color code bezel with white light gauge illumination.	$308
4440-0004	2.5" side suction top mount control handle Akron manual valve. Location: [#LOC].	$1,422
4440-0005	2.5" Left Intake Akron Manual Valve.	$1,072
4440-0006	2.5" Right intake Akron manual valve.	$1,072
4440-0007	2.5" Left Rear Intake Akron Manual Valve. (With rear discahrge location to be outside or below).	$1,729
4440-0008	2.5" Right Rear Intake Akron Manual Valve	$1,256
4440-0010	3" Left Intake Akron Manual Valve.	$1,758
4440-0011	3" Right Intake Akron Manual Valve.	$1,798
4440-0012	3" right rear intake Akron manual valve. (With rear discharge location to be outside or below.)	$2,063
4440-0014	5" front intake without valve.	$3,409
4440-0015	5" Front Intake w/5" Air Actuated Valve and Relief.	$5,377
4440-0016	5" right rear intake, no valve.	$2,602
4440-0017	5" Right Rear Intake w/5" Air Actuated Valve and Relief.	$4,330
4440-0018	2.5" Rear Intake for Rear Mount	$913
4440-0019	4" Rear Intake Akron Electric Valve for Rear Mount	$3,565
4440-0025	5" front intake with no valve plumbed through front bumper.	$3,811
4440-0026	5" Front Intake w/5" Air Actuated Valve and Relief Plumbed Through Front Bumper.	$5,780
4440-0027	2.5" Left Intake Hale Manual Valve	$1,092
4440-0028	2.5" Right Intake Hale Manual Valve	$1,284
4440-0029	3" Right Intake Hale Manual Valve	$2,275
4440-0030	2.5" Side Suction Top Mount Control Handle Hale Manual Valve Location: [#LOC]	$1,629
4440-0031	3" Left Intake Hale Manual Valve	$1,784
4440-0033	2.5" Left Rear Intake Hale Manual Valve. (With rear discahrge location to be outside or below).	$1,877
4440-0034	2.5" Right Rear Intake Hale Manual Valve	$1,403

4440-0035	3" Right Rear Intake Hale Manual Valve	$2,261
4440-0036	2.5" left intake Elkhart manual valve.	$1,218
4440-0037	3" Left Intake Elkhart Manual Valve	$1,971
4440-0038	2.5" Left Rear Intake Elkhart Manual Valve. (With rear discahrge location to be outside or below).	$1,873
4440-0039	2.5" Side Suction Top Mount Control Handle Elkhart Manual Valve. Location: [#LOC].	$1,564
4440-0040	2.5" Right Intake Elkhart Manual Valve	$1,218
4440-0041	3" Right Intake Elkhart Manual Valve	$2,013
4440-0042	2.5" Right Rear Intake Elkhart Manual Valve	$1,398
4440-0043	3" Right Rear Intake Elkhart Manual Valve. (With rear discahrge location to be outside or below).	$2,276
4440-0044	5" Left Rear Intake w/5" Air Actuated Valve and Relief. Requires air actuated tank to pump with side mount pump module configuration.	$4,705
4440-0045	4" Left Rear Intake Akron Electric Valve w/Intake Relief Valve.	$5,043
4440-0046	4" Right Rear Intake Akron Electric Valve w/Intake Relief Valve.	$5,043
4440-0047	4" Left Rear Intake Elkhart Electric Valve w/Intake Relief Valve	$5,428
4440-0048	5" Right Rear Intake Elkhart Electric Valve w/Intake Relief Valve	$6,041
4440-0049	3" Left Rear Intake Akron Manual Valve. (With rear discahrge location to be outside or below).	$2,406
4440-0050	3" Left Rear Intake Hale Manual Valve. (With rear discahrge location to be outside or below).	$2,597
4440-0051	3" Left Rear Intake Elkhart Manual Valve. (With rear discahrge location to be outside or below).	$2,613
4440-0053	4" Left Rear Intake Hale Electric Valve w/Intake Relief Valve	$6,031
4440-0054	4" Right Rear Intake Hale Electric Valve w/Intake Relief Valve	$6,031
4440-0055	3" Side Suction Top Mount Control Handle Akron Manual Valve. Location: [#LOC].	$2,045
4440-0056	3" Side Suction Top Mount Control Handle Hale Manual Valve Location: [#LOC]	$2,237
4440-0057	3" Side Suction Top Mount Control Handle Elkhart Manual Valve Location: [#LOC]	$2,252
4440-0058	5" Right Rear Intake w/5" Electric Actuated Valve and Relief.	$6,041
4440-0059	5" Left Rear Intake w/5" Electric Actuated Valve and Relief.	$6,041
4440-0061	5" front intake w/5" Akron electric actuated valve and relief.	$6,732
4440-0062	5" Front Intake w/5" Elkhart Electric Actuated Valve and Relief.	$6,735
4440-0063	Intake 6" Elkhart Elk-O-Lite 9786 Piston Valve. Ship Loose.	$2,017
4440-0064	2.5" Left Intake w/3" Akron Manual Valve	$1,637
4440-0065	2.5" Left Intake w/3" Hale Manual Valve	$1,829
4440-0066	2.5" Left Intake w/3" Elkhart Manual Valve	$1,845
4440-0067	2.5" Right Intake w/3" Akron Manual Valve	$1,637
4440-0068	2.5" Right Intake w/3" Hale Manual Valve	$1,829
4440-0069	2.5" Right Intake w/3" Elkhart Manual Valve	$1,845
4440-0070	2.5" Side Suction Top Mount Control Handle w/3" Akron Manual Valve Location: [#LOC]	$1,987
4440-0071	2.5" Side Suction Top Mount Control Handle w/3" Hale Manual Valve Location: [#LOC]	$2,180
4440-0072	2.5" Side Suction Top Mount Control Handle w/3" Elkhart Manual Valve Location: [#LOC]	$2,193
4440-0073	The driver and officer side aux. intakes. Includes 3" valve and 2.5" connection on panel.	$2,461
4440-0074	5" Front Intake without Valve Low "S" in Tray	$3,321
4440-0075	5" Front Intake w/5" Air Actuated Valve and Relief Low "S" in Bumper Tray.	$5,288
4440-0076	4" Front intake w/4" Akron electric valve and relief.	$6,003
4440-0077	2.5" Side Intake Operator Control Akron Elec Valve Drivers side.	$2,848
4440-0078	2.5" Left Intake Elkhart Unibody TM Control Manual Valve	$1,327
4440-0079	3" Side Suction Top Mount Control Handle Elkhart Manual Unibody Valve Location: [#LOC]	$2,050
4440-0080	Front Intake, Left and Right Pump 6" Inlet and 2.5 Left Direct Tank Fill Shall be "T" together with spring check valves and plumb into the FRC auto tank fill.	$3,287
4440-0081	2.5" side suction air control Akron valve Drivers side.	$1,097
4440-0082	2.5" Left Intake Akron Manual Valve With Integral 30 Degree Droop	$1,141
4440-0083	2.5" Right Intake Akron Manual Valve With Integral 30 Degree Droop	$1,141
4440-0084	5" Front Intake w/5" Manual Gear Actuated Valve and Relief	$6,307
4440-0086	2.5" Side Intake Operator Control Akron Elec Valve Officer side.	$2,848
4440-0087	2.5" Intake with Akron electric valve. Controller to be located at pump operator panel. Locate intake [#LOC].	$2,861
4440-0088	2.5" Intake with Hale electric valve. Controller to be located at pump operator panel. Locate intake [#LOC].	$2,861
4440-0089	5" Front Intake w/5" Electric Actuated Valve and Relief Low "S" in Bumper Tray	$6,644
4440-0090	2.5" Side Suction Air Act Akron Valve Locate Rear of Steamer.	$1,568
4440-0091	2.5" Side Suction Top Mount Control Handle w/3" Elkhart Unibody Manual Valve Location: [#LOC]	$2,081
4440-0092	3" Left Intake Elkhart Unibody Manual Valve	$1,758
4440-0093	3" Right Intake Elkhart Unibody Manual Valve	$1,798
4440-0094	2.5" Left Intake Elkhart Unibody Manual Valve w/chrom valve face.	$1,072
4440-0095	2.5" Right Intake Elkhart Unibody Manual Valve w/chrome valve face.	$1,072
4440-0096	5" Front Intake w/4" Hale Electric Actuated Valve and Relief Low "S" in Bumper Tray	$6,621
4440-0097	2.5" Right Intake Elkhart Unibody Manual Valve	$1,072
4440-0098	5" Front Intake w/5" Akron Electric Actuated Valve and Relief	$6,732
4440-0099	2.5" Intake with Akron electric valve. Controller to be located at pump operator panel. Locate intake [#LOC].	$2,861
4440-0100	5" Right Rear Intake w/5" Electric Actuated Valve and Relief.	$6,041
4440-0101	3.0" Side Intake Operator Control Akron Elec Valve Officer side.	$3,283
4440-0102	3" Left Rear Intake Akron Electric Valve w/Intake Relief Valve	$3,389
4440-0103	5" Front Intake w/5" Elect. Actuated Valve and Relief Plumbed Through Front Bumper.	$6,732
4440-0104	3.0" Side Intake Operator Control Akron Electric Valve Driver side.	$3,283
4440-0105	2.5" Intake Akron Manual Valve for Rear Mount Location: [#LOC]	$1,265
4440-0106	2.5" Intake Akron Electric Valve for Rear Mount Location: [#LOC]	$3,060

4440-0107	2.5" Side Suction Top Mount Control Handle Elkhart Manual Unibody Valve Location: [#LOC]	$1,407
4440-0108	5" Front Intake for use with rear mounted pump. Positioned to run under the officer side of the body to the officer side front bumper. Includes a 5" Akron electric valve and relief(s).	$8,567
4440-0109	2.5" Aux suction and located driver side pump module. Includes Akron electric valve with controller located at pump operator panel.	$2,685
4440-0111	Officer side 5" rear intake (No Valve). Intake to run under officer side of tank and then angle into B1. In B1 the intake needs to angle downward to above floor mounted reel. Support brackets will be provided as required and to engineering requirements. To include any additional primer valves as required.	$4,175
4440-0112	2.5" Intake with Elkhart Unibody electric valve. Controller to be located at pump operator panel. Locate intake [#LOC].	$2,861
4440-0113	2.5" Intake Elkhart Unibody Manual Valve for Rear Mount Location: [#LOC]	$1,265
4440-0115	2.5" Aux suction and located officer side pump module. Includes Akron electric valve with controller located at pump operator panel.	$2,685
4440-0116	2.5" Left Intake w/3" Elkhart Unibody Manual Valve	$1,593
4440-0117	2.5" Right Intake w/3" Elkhart Unibody Manual Valve	$1,593
4440-0126	Akron 2.5" foam system intake with swing handle. For use with Williams Advent or Hot Shot 150 foam system. Locate to [#LOC].	$1,072
4440-0129	Elkhart 3" foam system intake with swing handle. For use with Hot Shot 300 foam system. Locate to [#LOC].	$1,818
4440-0130	2.5" Right Intake w/3" Akron Manual Valve. Location: (REAR OF STREAM)	$1,637
4440-0131	2.5" Right Side intake Akron manual valve. Locate valve down low and the handle to be horizontally.	$1,234
4440-0133	3" Intake with Akron electric valve. Controller to be located at pump operator panel. Locate intake [#LOC].	$3,283
4440-0134	3" Intake with Elkhart Unibody electric valve. Controller to be located at pump operator panel. Locate intake [#LOC].	$3,283
4440-0137	2.5" side suction top mount control handle Akron manual valve with chrome plated end. Location: [#LOC].	$1,469
4440-0138	2.5" right intake Akron manual valve with chrome plated end.	$1,119
4440-0139	2.5" Intake Akron Manual Valve for Rear Mount Location: officer side rear intake with Integral 30 Degree Droop	$1,322
4440-0140	2.5" right intake Akron manual valve, located rear of steamer IPO standard location.	$1,072
4440-0141	5" Front Intake w/5" Air Actuated Valve and Relief. A three position air control switch will be located adjacent to the front suction on top of gravel shield inboard of front suction swivel.	$5,377
4440-0142	5" Left Rear Intake w/5" Air Actuated Valve and Relief. Does not include cap.	$4,562
4440-0143	2.5" Intake with Akron Electric Valve & Navigator Pro 9323 Controller with 30degree droop. Controller locates on pump operator panel. Locate intake [#LOC].	$2,789
4440-0144	5" Right Rear Intake w/5" Manual Hand Wheel Actuated Valve and Relief.	$5,949
4440-0146	Aux 2.5" foam system intake with swing handle. Locate to be [#LOC].	$1,072
4440-0147	2.5" Left Intake Akron Manual Valve With Integral 30 Degree Chrome Droop.	$1,324
4440-0148	2.5" Right Intake Akron Manual Valve With Integral 30 Degree Chrome Droop.	$1,324
4440-0149	2.5" Side Intake Top Mount Control Handle Akron manual valve. With Integral 30 Degree Chrome Droop. Location: [#LOC].	$1,674
4440-0150	2.5" Side Intake Top Mount Contro Handlel Akron manual valve. With Integral 30 Degree Droop.. Location: [#LOC].	$1,491
4440-0151	2.5" Side Suction Top Mount Control Handle Elkhart Manual Unibody Valve W/30 degree Chrome Droop. Location: [#LOC]	$1,660
4440-0152	2.5" Left Intake Elkhart Unibody Manual Valve w/30 degree Chrome Droop.	$1,324
4440-0153	2.5" Right Intake Elkhart Unibody Manual Valve w/30 degree Chrome Droop.	$1,324
4440-0155	2.5" Left Rear Intake Akron Manual Valve. Top Mount control.	$1,942
4440-0157	2.5" Intake with Akron electric valve with 9323 controller. Controller to be located at pump operator panel. Locate intake [#LOC].	$2,861
4440-0158	4" Right Rear Intake Akron Electric Valve include 9323 controller w/Intake Relief Valve.	$5,042
4440-0159	5" front intake w/5" Akron electric actuated valve and relief with 9323 valve controller.	$6,732
4440-0160	5" Front Intake w/5" Electric Akron Valve with 9323 controller and Relief Low "S" in Bumper Tray	$6,644
4445-0004	Front intake swivel 5" polished chrome.	$2,026
4445-0005	Front intake swivel 6" polished chrome.	$2,107
4445-0006	Intake Adapter 5" FNPT x 4.5" MNST for Front Intake	$412
4445-0007	Intake adapter 5" FNPT x 6" MNST for front intake.	$508
4445-0008	Intake Relief Valve - Elkhart.	$607
4445-0009	Intake relief valve, Akron.	$446
4445-0011	Valve Relief Intake - Ross 2.5"	$1,837
4445-0013	2.5" Check Valve for [#LOC] intake.	$384
4445-0014	3" Check Valve for [#LOC] Intake	$656
4445-0015	6" Check Valve for [#LOC] Steamer	$639
4445-0016	Intake relief valve, Hale 2.5".	$613
4445-0018	Intake relief valve outlet to be extended to the side of the truck under the running board. Includes tag that reads "Intake Pressure Relief Outlet - Do Not Cap".	$276
4445-0019	Intake Adapter 5" FNST x 4.5" MNST for Front Intake	$412
4445-0020	Intake Adapter 5" FNST x 6" MNST for Front Intake	$508
4445-0021	Intake Adapter 5" FNPT x 4.5" MNST for Rear Intake	$412
4445-0022	Intake adapter 5" FNPT x 6" MNST for rear intake.	$508
4445-0023	Recessed front suction intake swivel in bumper, 3" in tray.	$933

4445-0024	Intake adapter 5" FNPT x 5" MNST for front intake.	$378
4445-0025	Intake Adapter 5" FNPT x 5" MNST for Rear Intake.	$378
4445-0026	Front Intake Swivel 4" Polished Chrome	$1,215
4445-0027	Intake Adapter 4" FNPT x 4" FNST for Rear Intake.	$364
4445-0028	Intake bleeder/drain valve to be extended to the side of the truck.	$56
4445-0030	Intake Adapter 5" FNST x 4" MNST with LH 4" cap for Front, Rear, or Side Intake.	$412
4445-0032	Front Intake Swivel 5" Painted Job Color	$114
4445-0037	Auto Tank Fill Valve Plumbing "T" into Right MIV'S/Rear Intake with check valves.	$635
4445-0038	Waterous Intake Pressure Relief Valve.	$1,402
4445-0039	Intake Adapter 2-1/2"MNST X 3" FNST Swivels with plug.	$233
4445-0041	Front/Rear Intake Drain Valves to be located inside of the heat pan. Valves to be a 3/4" bleeder valve with 1/4 turn control located under officer side running board.	$156
4445-0042	Storz Connector 4"FNPT x 4" Storz 30Deg Elbow with Tethered Cap For rear intake.	$331
4445-0046	Storz Connector 5"FNPT x 6" Storz with Tethered Cap For rear intake.	$353
4445-0048	Intake pressure relief valve, Task Force Tips.	$430
4445-0049	Intake relief valve outlet to be extended to the side of the truck under the front body compartment. Includes tag that reads "Intake Pressure Relief Outlet - Do Not Cap".	$276
4445-0050	Intake adapter 5" FNPT x 6" MNST for rear intake.	$508
4445-0052	Recessed front suction intake swivel in bumper, 3" in tray using aluminum smooth plate with black Scorpion coating (IPOS diamond plate).	$1,011
4445-0054	Intake Adapter 5" FNPT x 4" MNST for Front, Rear, or Side Intake with 4" Cap.	$412
4445-0055	Intake adapter 5" FNPT x 5" MNST for front intake.The 5" front intake adapter shall be mounted so the threads approximately 2" from the bumper (Flush+2).	$378
4445-0056	Storz Connector 5" FNPT x 4" Storz 30 Degree Elbow with Tethered Cap For Rear Intake.	$431
4445-0058	5" Check Valve shall be install in front intake to prevent back flow.	$1,059
4445-0059	Manual override access door to be on officer's side pump panel to access the override on the front intake electric valve.	$82
4445-0060	Front intake bleeder valve to be located adjacent to inlet at front bumper.	$86
4445-0062	2.5" Left Aux Intake shall be as located approximately 6" below main pump inlet offset to rear.	$342
4445-0063	Storz Connector 5"FNPT x 5" Storz with Tethered Cap for front intake.	$353
4445-0067	Manual override access hole to be supplied in rear pump panel to access the override on the 4" tank to pump .Wrench required for manual override shall be located in vicinity of rear access panel.	$82
4445-0068	Storz Connector 5"FNPT x 5" Storz with Tethered Cap For front intake.	$353
4445-0069	Intake Adapter 5" FNPT x 4.547 PHOENIX 6 TPI with cap for Front, or rear intake.	$612
4450-0007	1" Tank Fill Akron Manual Valve	$389
4450-0008	1.5" tank fill Akron manual valve.	$886
4450-0009	1.5" Tank Fill Hale Manual Valve	$1,026
4450-0010	2" tank fill Akron manual valve.	$1,065
4450-0011	2.5" tank fill Akron manual valve. At pump panel.	$1,140
4450-0012	1.5" tank drain Akron manual valve.	$776
4450-0014	Direct 2.5" water tank fill with Akron valve. Location: [#LOC].	$1,291
4450-0020	2.5" rear direct tank fill. Location: [#LOC].	$1,288
4450-0021	3" Dual Tank to Pump Akron Manual Valves - Side Panel Controlled	$1,517
4450-0022	3" tank to pump Akron manual valve.	$1,121
4450-0023	3" Tank to Pump Akron Air Actuated Valve	$1,571
4450-0025	4" Tank to Pump Akron Electric Valve for Rear Mount	$4,079
4450-0026	5" Rear Jet Dump No Valve. Include 1-1/2" inline valve and high pressure hydraulic hose connected to the 1-1/2" internal tank piping which runs to the rear of the booster tank.	$2,155
4450-0027	5" Rear Jet Dump w/5" Manual Butterfly Valve.	$3,352
4450-0028	Newton Dump with Manually Operated Valve.	$1,926
4450-0029	Newton Dump Extension. For use with a manually operated Newton Dump.	$953
4450-0030	Newton Directional Chute. Includes chute support bracket and support bolts mounted each side on trailing edge of body/beavertails.	$1,549
4450-0031	Electric actuated dump valve includes 18" electric telescopic extension and switch.	$5,211
4450-0032	2" Tank Fill Akron Electric Valve	$2,624
4450-0034	2.5" Tank Fill "AutoFill" Automatic Tank Fill Valve. Location: [#LOC].	$7,552
4450-0035	2.5" Direct Tank Fill Location: [#LOC]	$1,184
4450-0037	4" Tank To Pump Akron Air Valve for Rear Mount	$3,518
4450-0038	Hale 4" Air Tank to Pump for CAFSPRO Foam System.	$4,246
4450-0054	2.5" Tank Fill Hale Manual Valve	$1,499
4450-0055	Hale 4" Manual Tank-to-pump	$3,204
4450-0056	3" Air Tank to Pump for Cafspro Foam System with4" plumbing.	$2,197
4450-0057	3" Tank to Pump Hale Manual Valve	$1,278
4450-0058	2.0" Tank Fill Hale Manual Valve	$1,219
4450-0059	1.5" Tank Fill Elkhart Manual Valve	$964
4450-0060	2" Tank Fill Elkhart Manual Valve	$1,142
4450-0061	2.5" Tank Fill Elkhart Manual Valve	$1,284
4450-0062	3" Tank to Pump Elkhart Manual Valve	$1,337
4450-0063	Direct 2.5" Water Tank Fill with Hale Valve. Location: [#LOC]	$1,439
4450-0064	Direct 2.5" Water Tank Fill with Elkhart Valve. Location: [#LOC]	$1,434
4450-0065	Direct 3" Water Tank Fill. Location: [#LOC].	$1,512
4450-0066	Tank-to-pump 4" Akron Air Valve.	$3,417
4450-0067	Tank-to-pump 4" Akron electric valve.	$3,494

4450-0068	3" Tank to Pump w/3.5" Waterous Valve	$1,714
4450-0070	2.5" Tank Fill Hale Electric Valve	$2,685
4450-0071	Tank-to-pump 4" Hale Electric Valve	$4,404
4450-0072	2.5" Direct Fill Line into the tank, Akron electric valve. Location: [#LOC].	$3,113
4450-0073	3" Tank to Pump w/3.5" Waterous Electric Valve	$3,312
4450-0074	2" Tank Fill Akron Valve Handwheel Control	$2,068
4450-0075	2" Tank Fill Elkhart Valve Handwheel	$2,118
4450-0076	2.5" Tank Fill Akron Valve Handwheel Control	$2,142
4450-0077	2.5" Tank Fill Elkhart Valve Handwheel Control	$2,190
4450-0078	3" Dual Tank to Pump Akron Air Valves.	$2,497
4450-0080	3" Tank to Pump Akron Manual Valve two (2) independent Top mount controls	$1,517
4450-0082	1.5" Tank Drain Hale Manual Valve	$875
4450-0083	1.5" Tank Drain Elkhart Manual Valve	$853
4450-0084	Auto Tank Fill Valve Plumbing "T" into Left and Right Fill Thieft with check valves.	$1,386
4450-0085	3" Tank to Pump Elkhart Unibody Manual Valve	$1,421
4450-0086	2" Tank Fill Elkhart Unibody Manual Valve	$1,145
4450-0087	2.5" Tank Fill "AutoFill" Automatic Tank Fill Valve. Location: [#LOC].	$7,606
4450-0088	2" Tank Fill Elkhart Unibody Electric Valve	$2,424
4450-0089	Tank-to-pump 3" Elkhart Electric Valve	$2,913
4450-0090	1.5" Direct Tank Fill Elkhart Unibody Manual Valve Left Side Panel	$1,064
4450-0091	2.5" Direct Tank Fill "AutoFill" Automatic Tank Fill Valve. Location: [#LOC].	$4,273
4450-0092	3" Tank to Pump Akron Valve Hand Wheel Control.	$2,314
4450-0093	Tank-to-pump 3" Akron Electric Valve	$3,262
4450-0095	2" Tank Fill Hale Electric Valve	$2,624
4450-0096	Electric 3" Akron tank to pump. Controller located on pump control panel.	$3,146
4450-0097	Electric 3" Hale tank to pump. Controller located on pump control panel.	$3,146
4450-0098	2.5" Tank Fill Akron Electric Valve	$2,776
4450-0099	3" Tank to Pump Elkhart Unibody Air Actuated Valve	$1,581
4450-0100	Direct Rear 2.5" Water Tank Fill [#LOC] with 2.5"Check Stainless steel Technocheck Valve.	$1,059
4450-0101	Newton Dump with electrically actuated valve and manually actuated chute. Electric dump valve control to be located to the driver side rear within reach from the ground.	$4,716
4450-0102	Direct 1" Water Tank Fill Plumb to the fill Tower and Terminate with .75 Female Hose Bib. Location: driver side pump panel.	$499
4450-0103	Direct Rear 2.5" Water Tank Fill with 2.5"Check Stainless steel Technocheck Valve. Location: [#LOC]	$1,059
4450-0104	6" Rear Gravity Dump No Valve	$2,487
4450-0105	3" Tank Fill Akron Manual Valve	$1,499
4450-0106	6" Rear Jet Dump w/6" Electric/Air Butterfly Valve with Control Switchs in Cab and Pump operator panel side Rear.	$3,562
4450-0107	Direct 2.5" water tank fill with 3" Elkhart manual valve. Location: [#LOC].	$1,653
4450-0108	2" tank fill Akron 9313 electric valve.	$2,624
4450-0109	2.5" Tank Fill Direct Akron Electric Valve with 9323 controller. Location: [#LOC]	$3,113
4450-0110	Tank-to-pump 4" Akron electric valve.	$3,494
4450-0111	4" Tank to Pump Akron Electric Valve for Rear Mount	$4,079
4450-0112	Electric 3" Akron tank to pump. Controller located on pump control panel.	$3,146
4450-0113	5" Rear Jet Dump (No valve). For use with a center slam strip rear end.	$1,945
4450-0114	3" Tank to Pump Electric Over Air Actuated Valve. (For Pump&Roll Operation)	$1,665
4450-0115	Newton Dump with Electric Operated Valve.	$3,695
4450-0116	2.5" Tank Fill Elkhart Unibody Manual Valve	$1,284
4450-0117	Tank-to-pump 4" Elkhart Unibody Electric Valve	$3,494
4450-0118	Direct 2.5" Water Tank Fill with Elkhart Unibody Valve. Location: [#LOC]	$1,434
4450-0119	3" tank to pump Akron manual valve w/4" tank connection.	$1,143
4450-0120	2.5" Rear Tank Inlet. Includes Water Level Gauge Located in B1 Compartment	$1,382
4450-0121	3" Tank to pump Akron air actuated valve w/4" tank connection.	$1,571
4450-0122	3" Tank To Pump Akron Electric Actuated Valve w/4" Plumbing.	$3,224
4450-0123	Direct 3" Tank Fill Akron Electric Valve with control at pump operator panel valve Location: [#LOC]	$3,146
4450-0124	3" Tank To Pump Elkhart Unibody Manual Valve w/4" Plumbing.	$1,199
4450-0125	3" Tank To Pump Elkhart Unibody Air Actuated Valve w/4" Plumbing	$1,660
4450-0126	Newton Dump with Manually Operated Valve. Model 1060 with 6" Extendable Handle.	$1,931
4450-0127	2.5" Tank Fill "AutoFill" Automatic Tank Fill Valve with IntelliTank level gauge located behind officer side pump panel. Location: [#LOC].	$7,552
4450-0129	3" Tank to Pump. Includes Akron manual valve with controller located in body compartment on pump operator panel.	$1,383
4450-0130	2" tank fill. Includes Akron manual valve with controller located in body compartment on pump operator panel.	$955
4450-0131	2.5" Tank Fill Elkhart Unibody Electric Valve	$2,896
4450-0132	3" Tank To Pump Elkhart Unibody Electric Actuated Valve w/4" Plumbing	$3,239
4450-0133	3" Tank To Pump Akron Air Actuated Valve w/4" Plumbing	$1,571
4450-0134	3" Tank To Pump Akron Manual Valve w/ Trident Hand Wheel Control and 4" tank connection.	$2,818
4450-0135	4" tank to pump with Akron air actuated valve. For use with rear mount pump.	$2,709
4450-0136	4" tank to pump with Elkhart air actuated unibody valve. For use with rear mount pump.	$2,709
4450-0137	4" tank to pump with Akron electric valve. For use with rear mount pump.	$3,101
4450-0138	4" tank to pump with Elkhart unibody electric valve. For use with rear mount pump.	$3,101
4450-0139	2" tank fill with Akron manual valve. For use with rear mount pump.	$1,006

4450-0140	2" tank fill with Akron electric valve. For use with rear mount pump.	$2,421
4450-0141	2" tank fill with Elkhart unibody manual valve. For use with rear mount pump.	$1,006
4450-0142	2" tank fill with Elkhart unibody electricl valve.	$2,421
4450-0145	Direct 2.5" Tank Fill Elkhart Unibody Electric Valve w/30 degree droop adapter with swivel/plug and control at pump operator panel. Location: driver side rear B1 compartment.	$3,113
4450-0146	Tank-to-pump 3" Elkhart Unibody Electric Valve	$2,913
4450-0148	4" rear direct tank fill. Includes handwheel control, swivel with droop with cap and retainer. Located to [#LOC] of the rear body.	$2,452
4450-0149	2.5" rear direct tank fill. Includes swing handle control, swivel with droop and cap with retainer. Located to [#LOC] of the rear body.	$1,189
4450-0156	3.0" Tank Drain Akron Air Actuated Valve.	$1,571
4450-0158	Rear tank dump. Includes stainless finish steel assembly with electrically actuated valve. For use with slip on extension and chute. Includes Slip-on stainless steel dump extension and chute with beavertail mounted removable support arm bracket and tailboard mounted storage tray (officer side) with retaining straps.	$5,211
4450-0160	Bush Pack 1" Fill with 1" Cam-Lock fitting located on pump operator pump panel. Include a 3' length of 1" clear hose.	$396
4450-0161	Direct .75" Water Tank Fill Plumbing to Terminate with .75 Female Hose Bib.Location: [#LOC]	$499
4450-0162	Direct 2.5" water tank fill with Akron valve. Location: Driver side rear of steamer Top Mount Control.	$1,428
4450-0163	Direct 3" water tank fill. Location: Driver side pump panel.	$1,512
4450-0164	Direct 2.5" Tank Fill Akron Electric Valve with Dual Control (1) control at the valve and (1) at the pump operator panel. Valve location officer side rear.	$3,752
4450-0166	Additional 3" Tank To Pump Akron Manual Valve w/4" plumbing. Shall include internal plumbing to the rear of the tank into the rear sump on officer side.	$2,064
4450-0169	4" rear direct tank fill. Includes handwheel control, with 5" Swivel Storz elbow and cap. Located to [#LOC] off rear of body	$2,891
4450-0170	Rear tank dump. Includes stainless finish steel assembly with electrically actuated valve. For use with slip on extension and chute. Includes beavertail mounted removable support arm bracket. Slip-on stainless steel dump extension with tailboard mounted storage tray (officer side) with retaining straps and chute mounted in B1 compartment above the dump.	$5,211
4450-0171	2.5" rear direct tank fill. The 2.5" direct water tank fill connection shall include an inlet strainer, a 2.5" FNST chrome inlet swivel, w/double male nst adapter and a chrome cap with cable. [#LOC] of the rear body.	$1,189
4450-0172	4" Direct Tank Inlet/Outlet w/4" Elect Valve. Include 4" plumbing, strainer and terminate with 4"FNST X 5" storz adapter w/cap. Location at left side pump panel.	$4,079
4450-0174	2.5" Direct Tank Fill Akron Electric Valve with Dual Control (1) control at the valve and (1) at the pump operator panel. Valve location officer side rear.	$3,982
4450-0175	4" rear direct tank fill. Includes electric dual control (1)operator panel (1) at valve, with 4" Swivel Storz elbow and cap. Located to (1) left and (1) right side off the rear body	$3,704
4450-0176	3" Tank to Pump Electric Over Air Actuated Valve w/4" Plumbing.. Include (1) control in cab, and (1) control pump operator panel).	$1,664
4450-0181	Hose bib female direct tank inlet 3/4" with valve. Location Officer side pump panel.	$297
4450-0182	Rear tank dump. Includes stainless finish steel assembly with air actuated valve on top of dump assembly. Includes integral swivel chute with manual extension.	$5,855
4450-0183	4" rear direct tank fill. Includes handwheel control, with cap and retainer. Valve to be Located on rear tailboard officer side. Include stainless steel plumbing from the top of the tank to tailboard. A 2.5" Direct inlet shall be"T" into the 4" piping up high.	$4,160
4450-0184	Hose bib female direct tank inlet 3/4" with valve. Location Driver side pump panel.	$297
4450-0185	3" Tank to Pump Electric Over Air Actuated Valve. (For Pump&Roll Operation)	$1,664
4450-0186	2.5" Tank Fill "AutoFill" Automatic Tank Fill Valve. Location: [#LOC].	$7,746
4450-0188	Rear tank dump. Includes painted steel assembly with manually actuated valve on top of dump assembly. Includes integral 6012 series swivel chute with manual telescopic extension and with locking system.	$3,646
4450-0190	Rear tank dump. Includes painted steel assembly with electric actuated valve on top of dump assembly. Includes integral swivel chute with manual telescopic extension and two locks one each side.	$5,135
4450-0191	Rear tank dump. Includes painted steel assembly with electric actuated valve and integral manual extension chute.	$2,482
4450-0192	Rear tank dump. Includes stainless steel assembly with electrically actuated 1070 dump valve. Includes integral swivel chute with manual extension.	$6,653
4450-0193	Driver and officer side tank dumps. Includes stainless steel assembly with electrically actuated valve. For use with flip chute.	$4,739
4450-0195	Rear tank dump. Includes stainless steel assembly with manually actuated valve on top of dump assembly with quick release pin to allow for folding down handle. Includes integral swivel chute with manual extension.	$4,756
4450-0196	Slip-on stainless steel dump extension chute.	$822
4450-0197	6" Rear Jet Dump 36" Extension Chute w/6" Female Cam Lock.	$870
4450-0199	Reverse push/pull handle on 3" tank to pump Akron manual valve. The "in" position will be open and the "out" position will be closed.	$54
4450-0201	4" Rear Direct tank fill. Includes Fireman Friend 4" valve with 5" Storz elbow adapter and cap. Located to [#LOC] of the rear body	$2,654
4450-0202	Rear tank dumps. Includes stainless steel assembly with electrically actuated valve with flip chute.	$3,659

4450-0203	Rear tank dump. Includes stainless steel assembly with electrically actuated valve. For use with slip on extension and chute.	$2,371
4450-0205	Direct 4" Tank Fill Akron Electric Valve with Dual Control (1) control at the valve and (1) at the pump operator panel. Valve location [#LOC].	$4,382
4450-0206	4" rear direct tank fill. Includes handwheel control, swivel with droop with cap and retainer. Include 3/4" bleeder. Located to [#LOC] of the rear body.	$2,421
4450-0207	2" Tank to Pump Electric Over Air Actuated Valve. (For Pump&Roll Operation)	$1,182
4450-0208	Rear Tank Inlet 3". Includes Water Level Gauge Located in B1 Compartment.	$1,733
4450-0210	2" tank fill Akron electric valve & Navigator Pro 9323 Controller.	$2,557
4450-0211	2.5" Direct Tank Fill "AutoFill" Automatic Tank Fill Valve. Waterous (Auto Fill) shall be "T" into both side 6" intake, front, and rear 5" intake with a special manifold and check valves.	$5,275
4450-0212	Rear tank dump. Includes steel assembly with manually actuated valve on top of dump assembly. Includes integral 6012SW swivel chute with manual telescopic extension and swivel to have seven position lock system.	$3,646
4450-0213	Newton dump switch to have a red flip up cover (or bezel).	$51
4450-0215	2" tank fill Akron Electric Valve & Navigator 9325 controller. Controller only, no flow or pressure reading require.	$2,581
4450-0216	Tank-to-pump 4" Akron electric valve with Navigator 9325 Controller. Controller only, no flow or pressure reading require.	$3,494
4450-0217	2.5" Direct foam tank fill Elkhart Unibody manual valve. Plumbing to be reduced to 2" after the valve. Location: [#LOC].	$1,284
4450-0218	6" Rear Gravity Dump No Valve terminate with 6" NST and cap.	$2,588
4450-0219	Rear tank dump. Includes painted steel assembly with manually actuated valve on top of dump assembly. Includes integral 6012SW swivel chute with manual telescopic extension and swivel to have seven position lock system.	$4,195
4450-0223	4" Rear Direct tank fill. Includes Fireman Friend 4" valve with 4" MNST adapter and cap. Located above lowered B1 compartment in upper smooth plate bolt on panel.	$2,654
4450-0224	4" tank to pump with Hale Valve air actuated unibody valve.	$2,995
4450-0226	4" Rear Direct tank fill w/4" check valve and pipng. Inculde a 4" MNST adapter and cap. Located officer side rear.	$1,983
4450-0228	Rear tank dump. Includes stainless steel assembly with manually actuated valve on top of dump assembly. Includes integral 6012 swivel chute with manual telescopic extension and with locking system.	$5,277
4450-0229	3" Tank Fill Akron Valve Handwheel Control	$2,256
4450-0230	3.5" Tank To Pump Akron Manual Valve w/4" Plumbing.	$1,399
4450-0236	2" Tank Fill Elkhart Unibody Valve Handwheel	$2,117
4450-0237	3" Tank To Pump Elkhart Unibody Manual Valve w/4" Plumbing. Include manual hand wheel control.	$1,770
4450-0238	Tank-to-pump 4" Akron electric valve with Navigator 9323 Controller.	$3,494
4450-0239	Direct 2.5" water tank fill with Akron valve. Location: Officer side rear of steamerl. Control at pump operator panel.	$1,428
4450-0240	5" Rear Jet Dump w/5" Akron Manual Butterfly Valve. Include a 5" Ames female coupler connection.	$3,704
4450-0241	4" rear direct tank fill. Includes handwheel control, with 4" Swivel Storz elbow and cap. Located to officer's side off rear of body	$2,891
4450-0242	6" Rear Gravity Dump with 6" manual hand wheel control valve to terminate with 6" MNST connection with cap..	$4,692
4450-0243	Direct 2.5" Water Tank Fill with Firemen Friend high flow Valve. Location: B1.	$1,482
4450-0249	4" rear direct tank fill. Includes handwheel control, swivel with cap. Located to [#LOC] of the rear body.	$2,421
4450-0250	2.5" Direct Tank Fill "Elkhart AutoFill" UBEC1AT Automatic Tank Fill Valve. Location: off driver side MIV intake valve.	$4,567
4450-0251	4" Tank to Pump Akron Valve Hand Wheel Control. Rear Mount	$3,884
4455-0004	Gasket Material around all Discharges, Intakes and Handle Slots on Pump Panel to hold in heat of Module Plumbing	$943
4460-0000	Air outlet w/snubber valve. Location: [#LOC].	$259
4460-0001	Air blow-out for: [#LOC].	$243
4460-0002	Hose reel blow-out, primary.	$248
4460-0004	All tags installed on the exterior of the apparatus shall be mechanically fastened with stainless steel screws. These include but not limited to tags installed on the pump module, body, cab and bumper.	$1,218
4460-0005	Fire Shop Bezel Chrome - Standard 2.5" Gauge	$38
4460-0006	Radiator Fill Valve on Pump Panel.	$286
4460-0007	Air outlet with snubber valve and 25' hose. Location: [#LOC].	$290
4460-0008	Air Outlet Valve to operate off of CAFS System Compressor. Location: [#LOC].	$357
4460-0009	Pump panel tags, special color. (Must specify.)	$306
4460-0010	Pump panel tags - Special label. (Must specify.)	$261
4460-0011	OK To Pump Light - Pump Panel Mounted - Green .75" Light. Located near pressure governor.	$68
4460-0013	Air Outlet Valve. Plumbed from the reservoir tank. Includes quarter turn valve. Location: [#LOC].	$306
4460-0014	Check Engine and Stop Engine light mounted on pump panel. Wire lights to pump module mounted alarm.	$262
4460-0017	Class 1 Color Coded Bezel Chrome - 2.5" Gauge.	$24
4460-0018	Class 1 color coded bezel, chrome - 3.5" gauge.	$28

4460-0021	Diagramatic Vinyl Side Mount Pump Panel Label of the discharges & preconnects specified color coding for handles and gauges.	$1,863
4460-0022	Stainless steel plates for all discharges and intakes behind the pump panel access doors, each side. Stainless steel plates to be mounted on the valve with rubber gasket to seal opening.	$1,087
4460-0023	Span Color Coded Bezel - 2.5" Gauge	$9
4460-0024	Span Color Coded Bezel - 3.5" Gauge	$9
4460-0025	Cut-out on officer side pump panel with expended metal. Cut-out to be approx. 14" wide x 6" high to provide sight to cord reel in pump house. Cut-out to be located above cord reel rollers on pump panel.	$149
4460-0026	CAFS Air Outlet Valve Recess Driver side Pump Panel with door.	$361
4460-0027	Diagramtic vinyl rear mount pump panel labeling of discharges and/or preconnects. Includes rear panel (with hosebed deck gun) and front discharge layouts (two (2) views- No top view).	$1,863
4460-0028	OBSOLETE - USE 4460-0004	$402
4460-0029	All exterior 1x3, and .1/2x1 tags shall be Vision Mark tags.	$679
4460-0030	L1 forward body compartment pump panel mount. Includes structural build out for panel mount.	$1,657
4460-0031	Attach Escutchion Plates with Thunb Latch on Officer Side.	$179
4460-0032	Push/Pull Rod Extrusion at pump panel to be thru bolted with nuts IPOS nut cert.	$91
4460-0033	CAFS Air outlet .75 valve with Handle and Quick Disconnect. Location: [#LOC]	$402
4460-0035	Diagramtic Vinyl Overlay Rear Mount Pump Panel. All Foam controls and Foam Discharges Yellow, Intakes Blue, Water Discharges Red, and Pump and Engine Gray.	$1,863
4460-0037	Fire Shopp NPFA Color Coded "T" handles with color coded tags.	$48
4460-0038	Diagramtic Vinyl Overlay Pump Operator Panel. All controls and Discharges, and Intakes.	$1,863
4460-0039	Innovative Controls Color Coded Bezel Chrome - 2.5" Gauge.	$103
4460-0040	Discharge Escutcheon Plates NFPA Color Coded to match photos in file with vinyl overlay shall be around each discharge outlet on driver and officer pump panel.	$491
4460-0042	Diagramtic Top Mount Pump Panel Label of the discharges & preconnects specified color coding for handles and gauges..	$4,722
4460-0043	Pump panel tags mechanically fastened with screws.	$402
4460-0045	Innovative Controls Tags, all plumbing, and body 1x3 tags shall be Innovative Controls. To include round tag for TM controls if applicable.	$691
4460-0046	Innovative Control Noshok 4" Master Gauge Bezel.	$112
4460-0048	Innovative Control 7.75" Dia Pump Intake Color Code Bezel Trim Ring.	$119
4460-0049	Innovative Control 4" Dia Pump Intake/Discharge Color Code Bezel Trim Ring.	$109
4460-0050	Innovative Controls Foam Discharge Identifing label shall be installed in recessed areas on each foam discharge gauge bezel.	$8
4460-0051	Speaker cut out with "E-ONE" stainless steel grille. Located pump operator panel. For dealer install speaker.	$129
4460-0059	Class 1 color coded bezel gauge trim ring - 2.5" Gauge	$36
4460-0060	Color coded trim rings around all inlets and outlets for both driver and officer side. The side discharge outlets shall be color coded and labeled to correspond with the discharge identification tag.	$1,261
4460-0061	Air outlet with 3/8" valve 1/4 turn, and 25' hose. Location:driver side	$342
4460-0062	Air outlet w/3/8" valve. Location: Officer side pump panel.	$285
4460-0063	Innovative Control 5.5" Dia Pump Intake/Discharge Color Code Bezel Trim Ring.	$110
4460-0066	Diagramtic Vinyl Pump Panel Label of the discharges & preconnects outlets. Location; On forward wall of L1 compartment adjacent to pump operator panel. Specified color coding.	$1,863
4460-0067	Officer side pump panel shall include an access door to provide access to the cab tilt switch and manual jack as mounted.	$189
4460-0069	Class 1 color coded bezel gauge trim ring - 3.5" gauge.	$40
4460-0070	Fire Shop Trim Ring/Collar Chrome w/color code insert - Side Discharge/Intake	$93
4460-0073	Pump Panel Tags 1" x 3" Addition label for each TM Control handles.	$66
4460-0074	Air blow-out for:Frt Jumpline .75" lift lever turn valve IPOS.	$289
4460-0075	Water/Foam Capacity label mounted adjacent to level gauges.	$54
4460-0077	Foam tank tag colors on PPNL to match color of fill towers on unit IPO standard RED.	$24
4460-0078	Pump panel tags, special color. #1 -Red Crosslay #2 -Yellow 2" tank fill- Black 3" tank to pump- Black 2.5" Left Intake - Black 2.5 Left rear dis -Blue 3" Deck Gun - Grey 2.5 Left Dis - Pink 2.5 Right Dis- Green 4" Right Dis- Purple.	$306
4460-0079	Pump Panel Tags 1" x 3", Additional label for tank to pump control handle. The "in" position will be open and the "out" position will be closed.	$27
4460-0080	Diagramatic Vinyl Overlay Rear Mount Pump Panel Label of the discharges & preconnects specified color coding for handles and gauges.	$1,863
4460-0081	Stainless steel trim plates for all discharges, intakes and pump inlets on hinge side pump panels.	$98
4460-0083	Pump panel NFPA warning tags, special location.	$44
4460-0085	CAFS Air Outlet Valve Recess Driver side Pump Panel with door.	$361
4460-0086	Air blow-out with Innovative Control 1/4" valve w/1/4 turn "T" handle and label for: [#LOC].	$232
4460-0087	Hose reel blow-out, with Innovative Controls 1/4" valve w/1/4 turn handle.	$232
4460-0088	Air outlet with Innovative Control 1/4" valve w/1/4 turn "T" handle and label for: [#LOC].	$232
4465-0003	FRC In-Control pressure governor. Includes engine and master pump gauges.	$5,321
4465-0005	Class 1 Captain pressure governor.	$2,816
4465-0007	Class1 Command Master pressure governor. Includes pump intake pressure and discharge pressure, throttle, relief, tank level(s), water, oil, volt and tachometer.	$5,155
4465-0008	FRC PumpBoss Pressure Governor. Includes engine gauges.	$2,617
4465-0009	FRC Pro-S Pressure Governor	$2,762

4465-0010	FRC In-Control pressure governor TGA200. Includes engine transmission and master pump gauges.	$5,380
4465-0011	Class 1 TPG pressure governor. Includes, water, oil, volt and tachometer.	$2,170
4465-0013	FRC In-Control pressure governor. Includes engine and master pump gauges.The discharge pressure display shall show pressures from 0 to 4000 kPa. The intake pressure display shall show pressures from -100 to 4000 kPa.	$5,321
4465-0015	FRC In-Control pressure governor TGA300. Includes engine, transmission, and master pump gauges.	$3,918
4465-0017	FRC PumpBoss pressure governor PBA400. Includes engine monitor gauges.	$2,617
4465-0018	FRC InControl pressure governor TGA400. Includes engine, transmission, and master pump gauges.	$3,918
4465-0020	Class 1 TPG Plus pressure governor. Includes master intake and discharge gauges, water, oil, volt and tachometer.	$2,899
4465-0021	FRC In-Control pressure governor TGA400-A10. Includes engine, transmission, and master pump gauges.	$3,918
4465-0022	Class 1 Sun Guard Pressure governor cover. Durable steel construction in black matte finish. Flips up to read controls; lays flat when not in use.	$220
4465-0024	The Pressure Governor as mounted on the pump panel shall include a stainless steel shield/visor to shade the display from direct sunlight (the shield/visor shall share the same painted on finish as the pump panel if applicable).	$147
4465-0028	Class 1 Sentry pressure governor/ Twister throttle. Includes master intake and discharge gauges, water, oil, tran, volt and tachometer.	$2,785
4475-0000	Pump certification 750-2250 GPM	$2,497
4475-0003	Pump certification 750-2250 GPM. To be performed by UL (Underwriter's Laboratories). Stainless steel product only.	$2,497
4475-0004	Pump certification 250-500 GPM	$1,791
4475-0007	Factory pump test only, not thrid party.	$1,791
4475-0008	Pump Certification 3000 GPM.	$2,663
5000	**Electrical**	
5010-0002	Multiplex electrical system for pumper / tanker / rescue.	$3,372
5010-0003	Multiplex modem kit. Includes cable, modem, and adapter harness.	$884
5010-0004	Multiplex data logger.	$626
5010-0013	Vehicle data recorder - 2009 NFPA compliant. Includes occupant detection with display. Display location: [#LOC].	$2,483
5010-0015	Additional CrewGuard display for use with VDR. Location: [#LOC].	$478
5010-0016	Multiplex electrical system for rear mount pumper.	$4,076
5010-0024	Modem for use with the E-ONE multiplex electrical system.	$617
5010-0036	V-MUX Electrical system for pumper / tanker / rescue.	$3,372
5010-0037	Multi-color touch screen display for multiplexed based electrical system. Location: [#LOC].	$1,825
5010-0049	Vehicle data recorder - 2009 NFPA compliant. Includes occupant detection shown in multiplex display. E-ONE chassis only.	$2,142
5010-0051	HVAC Controlled through multiplex display(s).	$1,127
5010-0052	Vista IV touch screen display for V-MUX electrical system. Location: [#LOC].	$2,062
5010-0055	Vista IV display for V-MUX electrical system. Location: [#LOC].	$1,758
5010-0057	GPS Module for V-MUX electrical system (Garmin). Includes antenna. Requires Vista display.	$1,585
5010-0059	VFD Text display for V-MUX electrical system. Location: [#LOC].	$766
5010-0065	Pump and roll screen for multiplex display. Reference specification for details.	$1,469
5010-0067	GPS Module for V-MUX electrical system (Weldon). Includes antenna. Requires Vista display with touch screen.	$1,199
5010-0069	Es-Key Multiplex electrical system for pumper / tanker / rescue.	$3,372
5010-0074	Special programming for multiplex color display (per hour). Requires engineering review and approval to determine feasibility and time.	$52
5010-0075	Vista display to have a customized sticker for legend buttons (Reference info in file for new configuration). May require special programming fee.	$512
5010-0076	Vista display to have a non-standard sticker for legend buttons (Reference info in file for existing but non-standard configuration). May require special programming fee.	$98
5010-0078	Link2 Vehicle information system for V-MUX electrical system. Does not include required subscription.	$1,452
5010-0081	Pump and roll screen for multiplex display. Reference specification for details.	$1,469
5050-0000	Vanner Bravo 1800 watt inverter. For use with (2) quartz lights. Includes on/off switch in cab. Inverter to be mounted in a body compartment as close to the chassis batteries as practical (20' max cable length).	$2,746
5050-0001	Vanner 2600 watt inverter. For use with quartz lights. Includes on/off switch in cab. Inverter to be mounted in cab below rear wall bench seat.	$4,239
5050-0002	Vanner 2600 watt inverter. For use with (2) quartz lights. Includes on/off switch in L1 compartment, next to breaker box. Inverter to be mounted in a L1 up high (20' max cable length).	$4,239
5050-0003	Vanner 2600 watt inverter. For use with (2) quartz lights. Includes on/off switch in driver overhead console. Inverter to be mounted in L3 up high forward (20' max cable length).	$4,239
5050-0015	Vanner 2600 watt inverter, (NFPA rating at 1400 watts). Includes on/off switch in L1 compartment. Inverter to be mounted in a L1, forward wall up high (20' max cable length).	$4,239
5050-0016	Vanner 2600 watt inverter, (NFPA rating at 1400 watts). Inverter to be mounted in a L1, on permanent shelf (20' max cable length).	$4,239

5050-0017	Body 110 volt outlets shall have a dedicated breaker within the breaker box for no more than every (2) body mounted receptacles (single outlet, duplex, etc. as applicable). This is to provide multiple isolated circuits as required that carry no more than (2) receptacles located throughout the body.	$507
5050-0018	Vanner Tru-sine 1000 watt inverter. For use with (4) cab interior receptacles when generator is not running or shoreline is not connected. Includes on/off switch in cab. Inverter to be mounted in a body compartment as close to the chassis batteries as practical (20' max cable length).	$1,848
5050-0019	Inverter prewire for dealer/customer supplied and installed 3KW inverter. Includes 12 volt wiring and A/C cabling to breaker box. Prewire to [#LOC].	$786
5100-0000	Foot switch to control air horns located [#LOC].	$114
5100-0001	Switch circuit three way. Includes (1) additional switch. An additional switch required for more than two locations. Location: [#LOC].	$161
5100-0002	Momentary switch with 6' pendant for cab tilt. Yellow weatherproof push button at end of coiled cord. Location of switch plug-in: [#LOC]	$359
5100-0006	Foot switch to control Q2B located [#LOC].	$114
5100-0007	Foot switch to control electronic siren located [#LOC].	$114
5100-0009	Audible door ajar alarm wired through door ajar light.	$59
5100-0010	Additional push button hose reel switch. Location: [#LOC].	$179
5100-0011	Switch 12V for 120-240V (EA). Location: [#LOC].	$412
5100-0014	Air horns to be interlocked through the master warning switch.	$96
5100-0015	Back-up alarm override momentary switch located at the cab dash. The switch will allow for overriding the back-up alarm and reset after transmission is shifted again.	$56
5100-0017	Wire rear amber through ignition switch.	$76
5100-0018	Primary Warning switch to activate all warning lights and siren controls to be located driver's side overhead console.	$170
5100-0019	Additional amber warning light override momentary switch located at the cab warning light switch panel. The switch will allow for overriding the rear additional amber warning lights and reset after ignition is turned off.	$309
5100-0020	Switch additional 12 volt/15 amp toggle. Location and function: Under driver side cab dash for master battery override.	$193
5100-0021	Opticom switch wired through upper level warning switch.	$72
5100-0022	Push-button hose reel switch. Location: [#LOC].	$179
5100-0023	Provide a single switch on the cab dash (within reach of the driver and officer) for locking and unlocking of all roll-up doors. The switch is to be red. Label RUD Lock.	$298
5100-0029	Stirrup style hose reel switch. Location: [#LOC].	$179
5100-0030	Additional stirrup stlye hose reel switch. Location: [#LOC]	$179
5100-0036	Additional programming instructions: [#LOC].	$119
5100-0038	Hose Reel rewind switch located in rubrail.	$91
5100-0039	Foot switch(es) mounted on a 45 degree bracket.	$78
5100-0040	Micro switch with 2.75" lever upgrade. Location: (2) hosebed cover, (1) ladder rack.	$76
5100-0042	Ramsey control with 3' cord for cab tilt in addition to standard toggle. Red/Black weatherproof push buttons at end of cord. Location of switch plug-in: [#LOC].	$359
5100-0044	Rear cab heater switch. Function and location: [#LOC].	$193
5100-0045	Thermostatic controls for pump compt heaters. Thermostat set at freezing temp.	$243
5100-0046	Cut-off switch for Q2B main power. Switch to be accessible from driver's seat.	$262
5100-0047	Switch household 110V w/ weaterproof cover. Location and function: cab mounted next to air compressor for 120V air compressor	$193
5100-0048	Magnetic door ajar switches IPO std for all body compt doors.	$698
5100-0049	Ramsey control with 8' cord for cab tilt in addition to standard toggle. Red/Black weatherproof push buttons at end of cord. Location of switch plug-in: [#LOC].	$359
5100-0050	Push button test switch for tank or foam level gauge, push button wired "hot" to batteries to allow checking tank level in fire station without having to power up truck electrical system. Located on operator pump panel.	$336
5100-0052	Household toggle switch for 110V. Switch plate will be a Crouse Hinds TP7256. Switch will be wire to top plug of duplex recept on rear, and be located next to recept. One switch for each top duplex.	$423
5100-0056	Hose deployment switch in front bumper tray. Includes hinged plate on bottom of bumper tray with switch on floor and indicator light on pump panel. Requires tray without slats. Location: [#LOC].	$568
5100-0059	Back-up alarm / rear back up lights override momentary switch located at the cab dash. The switch will allow for overriding the back-up alarm & back-up lights and reset after transmission is shifted again.	$56
5100-0060	Switch for 12V quartz lights to be located on officer side overhead console IPOS.	$119
5100-0061	Door ajar alarm override momentary switch located at the cab dash. The switch will allow for overriding the door ajar alarm and reset after transmission is shifted again.	$193
5100-0063	Ramsey control with 10' cord for cab tilt. Red/Black weatherproof push buttons at end of cord. Location of switch plug-in: next to manual cab tilt pump	$359
5100-0064	AM/FM radio to be connected to radio re-broadcast input of siren. Includes momentary sw on driver's sw panel that will disable connection when master power is cycled.	$309
5100-0065	Switch pump compt light(s). Includes door switches on pump module access doors to activate light(s). Location: top mount pump panel.	$326
5100-0066	Solid state dimmer switch. Location and function: [#LOC].	$125

5100-0067	Display switch function and location: (2) front cab dome lights: clear light switched at driver, officer and pump panel; red light switched at driver and officer. (3) Cab dome lights above rear facing seats: clear light switched at driver, officer and pump panel; red light switched at driver, officer and pump panel. (4) Pump panel cab dome lights: clear light switched at driver, officer and pump panel; red light switched at driver, officer and pump panel. Front scene lights at driver, officer and pump panel displays. Driver side scene lights at driver, officer and pump panel displays. Officer side scene lights at driver, officer and pump panel displays. Rear facing scene lights at driver, officer and pump panel displays.	$536
5100-0069	Additional panel mounted Go-Light spot control. Location: officer side cab switch panel.	$190
5100-0072	Locate Q2B brake in officer side overhead console IPO standard location of driver side overhead console.	$55
5100-0073	Additional programming instructions: wire officer rear quartz light ajar switch through ladder rack controls.	$119
5100-0086	Additional programming instructions: clear warning lights to remain on in bloking mode in accordance with Maryland Code Allowance.	$119
5100-0087	Ramsey control plug-in for cab tilt in addition to standard toggle. Does not include tether controller. Location: [#LOC].	$202
5100-0088	Linemaster Twin 491-S foot switch to control air horns and Q2B located [#LOC].	$366
5100-0089	Foot switch to control electric fire bell located [#LOC].	$114
5100-0090	Foot switch to control Scream Eagle siren located [#LOC].	$114
5100-0091	Switch 12V for 110-240V (EA). Location: cab switch panel for rear body quartz light(s).	$412
5100-0094	Ramsey control with 15' cord for cab tilt in addition to standard toggle. Red/Black weatherproof push buttons at end of cord. Location of switch plug-in: [#LOC].	$359
5100-0095	Switching controlled through the Multiplex display for 120-240V devices (EA). The 120-240V Multiplex switching utility shall be used for: [#LOC].	$412
5100-0098	Switch additional rocker lock-out safety style. Location and function: [#LOC].	$193
5100-0099	Momentary rocker switch for the Federal Rumbler (secondary siren) located on the driver and officer side overhead panels. The switches will allow for overriding the Federal Signal Rumbler siren and reset after ignition is turned off.	$309
5100-0100	Switch additional (2) position shall be installed and properly labeled to enable operator to activate the OEM traffic horn or air horn. The switch shall be located: rear of body driver side approximately 65" above ground level.	$193
5100-0101	Switch, additional 12 volt/15 amp. Location and function: driver side pump panel for radio speaker as mounted on or near pump panel.	$193
5100-0102	A cab interior audible alarm and hazard light. The light shall be blue in color and 2" diameter, The alarm and hazard light shall be wired to the light tower to provide a clear indicator of when the light tower is raised or not in the bedded position. The light shall be mounted in the vicinity of the door ajar hazard light.	$143
5100-0103	Locate Q2B brake on lower dash between touch screens IPOS.	$55
5100-0104	Air horn switch at rear body. Switch to be labeled "Air Horn". Location: driver side rear of body approx. eye level (if applicable).	$135
5100-0105	Switch momentary. Head lights, running lights, and tail lights (on with ignition) override momentary switch located at the cab dash. The switch will allow for overriding the head lights, running lights, and tail lights (turning them off momentarily) after the ignition has been turned on.	$193
5100-0106	Thermostatic control for compartment heater. Thermostat set at 60 degrees Fahrenheit to prevent freezing. Location: [#LOC].	$124
5100-0107	Cut-off switch for Q2B main power. Switch to be accessible from officer's seat.	$262
5100-0108	Switch circuit three way 12V for 120-240V (EA). Includes (1) additional 12V for 120-240V switch. An additional switch required for more than two locations. Location: [#LOC].	$412
5100-0109	Audible alarm to sound when water level is below 1/4 tank remaining.	$274
5100-0112	Ramsey control on officer side cab dash with 3' cord to operate Q2B and air horns. Red switch Q2B, Black air horns.	$338
5100-0115	Monarch control for cab tilt in place of standard toggle.	$394
5100-0116	Weldon 4-button V-MUX switch module. Location [#LOC].	$394
5100-0117	Switch, additional momentary 12 volt/15 amp. Location and function: [#LOC].	$193
5100-0118	Door ajar indicator switches for all SCBA air bottle storage compartment doors on body wired to "Door Open" indicator inside cab.	$54
5100-0119	Rear cab heater Eaton guarded switch. Function and location: [#LOC].	$193
5100-0120	Switch additional guarded toggle. Location and Function: driver side rear of body for rear flood lights.	$193
5100-0125	Door ajar indicator switches for all SCBA air bottle storage compartment doors on cab wired to "Door Open" indicator inside cab.	$54
5100-0127	Switch panel three way. Includes (7) additional switches. An additional switch required for more than two locations. Location: L1 adjacent to breaker box for front brow lights, driver 120V cab/body scene lights, officer 120V cab/body scene lights, driver 12V cab/body scene lights, officer cab/body 12V scene lights and rear 12V scene lights.	$1,122
5100-0128	Red flip cover for toggle switch. Location: [#LOC].	$18
5100-0129	Switch rear door fully open for dump valve power activation.	$350
5100-0130	Weatherproof Eaton rocker switches on pump panel ipo toggle switches.	$221
5100-0131	Foot switch(es) mounted on a 30 degree bracket.	$78
5110-0003	High impact orange ABS plastic handheld spotlight SL-45 Location: [#LOC].	$205
5110-0004	Alternating flasher for headlights.	$329
5110-0005	Pre-wire for trailer hitch. Includes stop, left turn, right turn, marker and ground wires. Does not include connector.	$232

5110-0007	Audible indicator in cab with rear button. The rear button will be located on the driver's side at the rear behind the hand rail (if equipped).	$337
5110-0008	Audible indicator in cab with rear buttons. The rear buttons will be located one each side at the rear, behind the hand rail (if equipped).	$371
5110-0009	Clock Digital 12/24 Waterproof mounted in cab officer's overhead dash.	$611
5110-0010	Receptacle 12V 175A portable winch. Located at rear near trailer hitch.	$344
5110-0011	Vehicle Information Control Center for E-One Multiplexed trucks located on Driver's Side.	$5,802
5110-0012	Vehicle Information Control Center for E-One Multiplexed trucks located on Officer's Side.	$5,802
5110-0013	Vehicle Information Control Center for E-One Multiplexed trucks located on Driver's Side. Display Only, No computer.	$2,464
5110-0014	Vehicle Information Control Center for E-One Multiplexed trucks located on Officer's Side. Display Only, No computer.	$2,464
5110-0015	Vehicle Information Control Center for E-One Multiplexed trucks located at center of engine cover mounted on swivel bracket.	$6,165
5110-0017	Back-up alarm 97 dB.	$100
5110-0018	12 volt 12 gauge constant hot lead (24" long) with ground wire. Location: [#LOC].	$78
5110-0024	Back up alarm Grote 107 dB(A).	$257
5110-0025	Back up horn system. Includes 12v independent horn (NAPA 730-1047) below officer's side dash, 12v independent horn (NAPA 730-1047) at rear of body and Ramsey control switch with 25' tether at rear of body.	$805
5110-0026	12 volt 12 gauge wired through ignition lead (24" long) with ground wire. Location: [#LOC].	$78
5110-0027	Powered equipment rack alarm. To activate while rack is in motion.	$67
5110-0028	Code3 model 700 flasher for alternating headlights.	$322
5110-0030	Flasher alternating for headlights Whelen model UHF2150A.	$342
5110-0031	12 volt 12 gauge wired to chassis reverse (24" long) with ground wire. Location: back wall of rear bench seat riser.	$78
5110-0032	Clock digital 12/24 waterproof mounted in [#LOC].	$611
5110-0034	4 Pin trailer wiring flat connector. Includes matching plug. Requires trailer wiring pre-wire option.	$91
5110-0037	Additional wiring instructions: [#LOC].	$355
5110-0039	Clock Digital 12/24 Waterproof mounted in cab officer's switch panel.	$611
5110-0040	Indicator light. Color: [#COL]. Location and function: [#LOC].	$112
5110-0041	7 pin trailer wiring connector. Requires trailer wiring pre-wire option.	$121
5110-0042	Trailer wiring and connector for 2009 NFPA 1901 Type I, Type II or Type III trailer. Includes model 12-907 connector on body. Stop/turn/tail circuits shall be connected, remaining wires to be coiled up for future use. Trailer end 12-906 shipped loose.	$448
5110-0043	Back-up alarm Federal Reactor model 210350 self-adjusting.	$175
5110-0044	ABS cover for multiplex PDMs' located in the pump module.	$92
5110-0045	Radio interface cable-run a 7-conductor 20 gauge wiring (578865) from the pump panel microphone box to the center overehead area, leave a 30" coil of wire at each end.	$542
5110-0046	4 Pin trailer wiring heavy duty round connector. Includes matching plug. Requires trailer wiring pre-wire option.	$101
5110-0052	12V power distribution module. Includes (6) battery hot and (6) switched hot circuits. 100 amps max (IATS). Location: [#LOC].	$298
5110-0060	12 volt 4 gauge constant hot lead (24" long) with ground wire. Location: [#LOC].	$234
5110-0065	Lighted bumper guide (PR). Bores model 848211 located (1) each side of front bumper extension.	$397
5110-0066	Switches in cab (2) for controlling (2) TNT DT 4.0 diesel engine hydraulic power units. Switches to be kill/run/start with indicator light. Run wiring into dunnage area with extra length for dealer installation.	$1,023
5110-0067	Back up alarm Preco 97 dB(A) warble tone.	$260
5110-0068	Handheld flashlight, orange Streamlight Litebox flashlight with vehicle mount system. Location: [#LOC].	$184
5110-0069	Back up alarm ECCO model 410 97 dB(A) grommet mount.	$201
5110-0070	Vehicle Information Control Center for E-One Multiplexed trucks swivel pedestal mount located at center between driver and officer. Mid engine cabs only.	$6,165
5110-0079	Back up alarm Ecco model SA917 87-112dB.	$228
5110-0080	EMI/RFI Testing and Certification	$5,246
5110-0082	Receptacle 12V 175A portable winch. There will be a total of four, locate one at each of the receiver.	$1,371
5110-0083	Receptacle 12V 175A portable winch. There will be a total of three, locate one at each of the side and rear receivers.	$1,028
5110-0087	Tekonsha model Prodigy 2 trailer brake controls wired to connector. Control located in cab accessible to driver. Requires 9-pin connector.	$855
5110-0088	Lighted bumper guide (PR) with angled support brackets. Bores model 848211 located (1) each side of front bumper extension.	$513
5110-0089	Back-up alarm Ecco model 575 107dB.	$168
5110-0090	Breaker box grounding cable. 10' 2Ga cable attached to ground side of breaker box. Includes clamp on end of cable for use with aerial ground pad.	$225
5110-0094	Wiring instructions: Dedicated ground wire for 12V distribution module located behind officer seat.	$126
5110-0109	Indicator light, Weldon 9186-2300. Color: [#COL]. Location and function: [#LOC].	$112
5110-0110	Receptacle 12V 175A portable winch. Located at front near receiver.	$344
5110-0112	Back up alarm Preco model 1040.	$174
5110-0113	Indicator light. Color: Red. Location and function: pump operator panel for foam pump on.	$112

5110-0114	Powered equipment rack alarm; Preco 97dB(A) warble tone. To activate while rack is in motion and through park brake.	$260
5110-0119	CAT V cable run. This will include CAT V wire, non-plenum. Run cable from microphone box on pump panel to center overhead in cab.	$138
5110-0120	Receptacle 12V 175A portable winch. There will be a total of three, locate one at each of the side and front receivers.	$1,028
5110-0124	Audible indicator in cab with rear buttons. The rear buttons will be located [#LOC].	$371
5110-0125	Receptacle 12V 175A portable winch. There will be a total of (2), locate one (1) on each side near under body receivers.	$687
5110-0132	Indicator light. Color: Green. Location and function: driver side overhead for jake brake "on".	$112
5110-0133	12 volt 10 gauge constant hot lead (24" long) with ground wire. Location: [#LOC].	$91
5110-0135	Additional wiring overlays to support Whelen 900 series lighting (not OEM installed). Lights shall be installed at a later date. One (1) each side of body on forward upper body corners.	$180
5110-0136	Collision Avoidance Systems model CAS-4RF rear obstacle detection and proximity system. Includes 4 sensors at rear of vehicle and speaker in cab.	$1,813
5110-0138	Regen indicator light with warning tag . Whelen 500 series TIR6 amber light located in rubrail above exhaust end. Includes warning tag to read "High Exhaust Heat When Flashing". Light to be wired through indicator in cab and park brake.	$301
5110-0139	12 volt 14 gauge wired through ignition lead (36" long) with ground wire. Location: [#LOC].	$93
5110-0140	12 volt 10 gauge wired through ignition lead terminated in a junction box with ground wire. Location: [#LOC].	$93
5110-0141	TBD	$151
5110-0143	Handheld flashlight, orange Streamlight HID Litebox flashlight with vehicle mount system. Location: [#LOC].	$1,317
5110-0144	Hopkins 7 pin trailer wiring connector model 48495-7 RV blade. Requires trailer wiring pre-wire option.	$125
5110-0145	Pre-Wiring for trailer hitch should include a hot 12vdc and back-up light wire at the connector and a wire from the connector to the cab for future electric brake unit in cab. In the cab there should be a wire labeled for brake lights to connect to future electric brake unit. Connector sold separately.	$232
5110-0146	Cole-Hersee trailer tail light converter model 48000. Trailer connector sold separately.	$305
5110-0149	Generator power shall be supplied to the command desk area. One (1) 12/3 cable shall supply 20 amps with 10' of wire coiled at the command desk area. The wires shall be clearly marked to identify them as 110V/20A generator power.	$337
5110-0150	Shoreline power shall be supplied to the command desk area. One (1) 12/3 cable shall supply 20 amps with 10' of wire coiled at the command desk area. The wires shall be clearly marked to identify them as 110V/20A shoreline power.	$337
5110-0153	12V power distribution module. Includes (6) battery hot and (6) switched hot circuits. 100 amps max (IATS). Includes circuit breakers ipo fuses. Location: [#LOC].	$298
5110-0154	Dow Corning 738 white electrical sealant. Apply to all exposed electrical connections.	$321
5110-0155	Customer supplied handheld spotlight SL-45 shall be mounted in place. Location: [#LOC].	$167
5110-0158	12 volt 12 gauge lead (24" long) with ground wire wired to battery saver. Location: [#LOC].	$78
5110-0160	Pollak 7 pin trailer wiring connector model 12-709. Requires trailer wiring pre-wire option.	$180
5110-0161	Blue Sea 12V power distribution module model 5025 (2) and (1) 5026 wired through battery hot. Location: (1) 5025 in center cab dash, (1) 5026 in forward floor of radio cabinet and (1) 5025 behind officer seat.	$1,121
5110-0162	Wiring instructions: Dedicated ground wire for 12V distribution module located at driver and officer 3x3 post.	$126
5110-0166	Blue Sea 12V power distribution module model 5025 (2) and (1) 5026 wired through ignition hot. Location: (1) 5025 in center cab dash, (1) 5026 in forward floor of radio cabinet and (1) 5025 behind officer seat.	$1,121
5110-0167	Megellan vehicle mount weather station with Weather Master software. Display located on the front engine cover with telescopic pole on the driver side back of cab.	$11,530
5110-0169	Aluminum smooth plate cover for foam controller shall be located on back of controller.	$196
5130-0000	Cord reel 150 feet of 12/3 black cord installed on the [#LOC] with an electric rewind.	$1,766
5130-0001	Cord reel electric with 200' of 10/3 black cable. Locate [#LOC].	$2,086
5130-0002	Cord reel electric with 200' of 10/3 yellow cable. Location(s): [#LOC].	$2,355
5130-0003	Cord reel electric with 200' of 10/4 black cable. Location: [#LOC].	$2,349
5130-0004	Cord reel electric with 200' of 10/4 yellow cable. Location [#LOC].	$3,046
5130-0006	Cord reel rollers mounted on reel in [#LOC].	$340
5130-0007	Cord connector. Daniel Woodhead 3 wire NEMA 5-15 straight blade female located on cord for reel in [#LOC].	$79
5130-0008	Cord connector. Daniel Woodhead 3 wire NEMA L5-15 twist lock female located on cord for reel in [#LOC]	$82
5130-0009	Cord connector. Daniel Woodhead 3 wire NEMA L5-20 twist lock female located on cord for reel in [#LOC].	$111
5130-0010	Cord connector. Daniel Woodhead 4 wire NEMA L14-20 twist lock female located on cord for reel in [#LOC].	$111
5130-0011	Cord connector. Daniel Woodhead 3 wire NEMA L6-20 twist lock female located on cord for reel in [#LOC]	$111
5130-0012	Junction box Circle-D with four (4) 3-wire NEMA L5-15 110 volt 15 amp twist lock receptacles. Located on cord for reel in [#LOC].	$719
5130-0013	Junction box Circle-D with four (4) 3-wire NEMA L5-20 110 volt 20 amp twist lock receptacles. Located on cord for reel in [#LOC].	$719
5130-0014	Circle D wall/floor mounting box. Locate box for use with reel in or on [#LOC].	$141

5130-0015	Junction box Circle-D with two (2) 15 amp straight blade and two (2) 20 amp twist lock receptacles. Located on cord for reel in [#LOC].	$908
5130-0016	Junction box Circle-D with all twist lock, 2-120V and 2-240V outlets. Located on cord for reel in [#LOC].	$889
5130-0017	Junction box Woodhead with four (4) NEMA L5-15 110 Volt 15 Amp twist lock receptacles. Located on cord for reel in [#LOC].	$1,429
5130-0018	Junction box, Daniel Woodhead, with four (4) NEMA L5-20 110 volt 20 amp twist lock receptacles. Located on cord for reel in [#LOC].	$1,142
5130-0019	Cord reel 150 feet of 12/3 yellow cord installed in the [#LOC] with an electric rewind.	$1,831
5130-0022	Cord reel rollers mounted through panel. Location(s): [#LOC].	$340
5130-0024	Electric cord reel rewind switch. Switch located [#LOC].	$114
5130-0026	Cord connector. Fire Power 3 wire 20A/110V female located on cord for reel in [#LOC].	$575
5130-0027	Cord connector. Duraline 4 wire 20A/220V female located on cord for reel in [#LOC].	$151
5130-0028	Cord reel rollers mounted on reel.	$340
5130-0030	Junction box Circle-D with one (1) straight blade and three (3) twist lock receptacles. Located on cord for reel in [#LOC].	$908
5130-0031	Cord reel electric/manual back-up with 200' of 10/3 black cable. Crank handle mounted next to reel. Locate [#LOC]	$2,506
5130-0032	Cord reel electric with 150' of 10/4 yellow cable. Location [#LOC]	$3,046
5130-0033	Junction box Circle D with four (4) 3-wire NEMA 5-15 110 volt 15 amp straight blade receptacles. Located on cord for reel in [#LOC].	$719
5130-0034	Cord reel Akron electric with 200' of 10/3 yellow cable. Location(s): [#LOC].	$2,248
5130-0035	Junction box Circle-D with (3) L5-15 and (1) L5-20 110Volt twist lock receptacles. Located on cord for reel in [#LOC].	$719
5130-0036	Diamond plate cord reel cover over reel. Use rollers provided with reel on cover IPO E-One supplied if applicable. Location: [#LOC]	$595
5130-0037	Cord reel Akron electric with 200' of 10/4 yellow cable. Location(s): [#LOC]	$2,942
5130-0038	Junction box Circle-D with (2) L5-20 twist lock and (2) 5-20 110Volt straight blade duplex receptacles. Located on cord for reel in [#LOC].	$719
5130-0039	Roller support bracket up high at compt opening for reel in [#LOC].	$258
5130-0040	Hannay PWM (Pulse Width Modulator) control for reel. Mounted next to switch for cord reel in [#LOC].	$640
5130-0041	Cord reel rollers bracket mounted on top of [#LOC].	$340
5130-0042	Junction box Circle-D with four (4) 3-wire Nema 5-20 110Volt 20 Amp duplex receptacles. Located on cord for reel in [#LOC].	$796
5130-0044	Junction box Akron with (2) 5-20 125v 20 Amp duplex recepts and (2) L5-20 125v 20 Amp twist lock recepts. Located on cord for reel in [#LOC].	$566
5130-0045	Akron model EJB-VMT-TP mounting box. Locate box for use with reel in or on [#LOC].	$276
5130-0046	Junction box Circle-D with one (1) 5-20 straight blade and three (3) L5-20 twist lock receptacles. Box wired as 240v with individual circuit breakers on box. Located on cord for reel in [#LOC].	$908
5130-0048	Junction box Circle-D with (2) NEMA 5-20 120V GFCI duplex and (2) NEMA L6-20 220V twist lock receptacles. Located on cord for reel in [#LOC].	$908
5130-0049	Cord reel electric for 200' of 10/3 cable. Cable not included. Location(s): [#LOC]	$2,107
5130-0054	Cord reel electric with 200' of 8/3 black cable. Locate [#LOC]	$3,573
5130-0055	Cord reel rollers mounted on support bracket. Location(s): [#LOC]	$340
5130-0056	Junction box Woodhead with (3) NEMA L5-15 110 Volt 15 Amp twist lock receptacles and (1) NEMA 5-20 110 Volt 20 Amp household receptacle. Located on cord for reel in [#LOC].	$1,429
5130-0057	Mounting box for Woodhead junction box. Locate box for use with reel in or on [#LOC].	$258
5130-0058	Junction box Akron with four (4) 3-wire NEMA L5-20 110 volt 20 amp twist lock receptacles. Located [#LOC].	$566
5130-0059	Junction box Circle-D with four (4) FirePower FP11 110Volt 20 Amp receptacles. Located on cord for reel in [#LOC].	$1,171
5130-0061	Cord reel electric with 250' of 10/3 black cable. Locate [#LOC].	$2,461
5130-0062	Junction box Circle-D with (2) 5-20 straight blade and (2) twist lock receptacles; (1) L5-20 and (1) L5-15. Located on cord for reel in [#LOC].	$908
5130-0063	Cord reel electric with 200' of 12/3 black cable. Locate [#LOC].	$2,461
5130-0067	Junction box Akron with (4) 5-20-GFCI 125v 20 Amp duplex recepts. Includes 12" pigtail with L14-20 connector and rubber feet. Located on cord for reel in [#LOC].	$566
5130-0068	Cord reel electric with 200' of 10/3 yellow cable. Location(s): [#LOC].	$2,355
5130-0069	Cord reel electric with 250' of 10/3 yellow cable. Locate [#LOC].	$2,797
5130-0070	Cord connector. Hubbell 4 wire NEMA L14-20 twist lock female located on cord for reel in [#LOC]	$111
5130-0073	Cord reel electric low profile with 200' of 10/3 yellow cable. Location(s): [#LOC].	$2,985
5130-0074	Cord connector. Daniel Woodhead 3 wire NEMA 5-20 straight blade female located on cord for reel in pump module storage pan officer side.	$79
5130-0079	Cord reel electric with 150' of 10/3 yellow cable. Location(s): [#LOC].	$2,162
5130-0080	Junction box Circle-D with four (4) 3-wire NEMA L5-20 110 volt 20 amp GFCI twist lock receptacles. Located on cord for reel in [#LOC].	$908
5130-0081	Cord reel electric model ECR 1620-17-18 with 200' of 10/4 yellow cable. Location [#LOC].	$3,046
5130-0082	Cord connector. Daniel Woodhead 3 wire NEMA L5-30 twist lock female located on cord for reel in [#LOC].	$156
5130-0083	Slideout cord reel roller assembly. For cord reel located in [#LOC].	$946
5130-0084	Junction box Circle-D with one (1) 15 amp straight blade and three (3) 15 amp twist lock receptacles. Located on cord for reel in [#LOC].	$908

5130-0087	Cord connector. Daniel Woodhead 4 wire NEMA L14-30 twist lock female located on cord for reel in [#LOC].	$156
5130-0088	Junction box Woodhead with two (2) NEMA L5-20 110V 20A twist lock and two (2) NEMA 5-20 110V 20A duplex receptacles. Located on cord for reel in [#LOC].	$1,297
5130-0090	Junction box Akron with (4) 5-15 120v 15 Amp duplex recepts. Located on cord for reel in [#LOC].	$566
5130-0091	Roller support bracket for reel. Rollers and bracket shall be mounted: [#LOC].	$258
5130-0093	Cord reel electric. Chrome / stainless with 200' of 10/3 yellow cable. Location(s): [#LOC].	$2,513
5130-0094	Cord reel electric with 200' of 10/3 black cable model ELFCR1622-14-16. Locate [#LOC].	$2,086
5130-0096	Cord reel electric model ECR 1624-14-15 with 200' of 10/4 yellow cable. Location [#LOC].	$3,046
5130-0101	Cord reel electric with 150' of 10/4 yellow cable. Reel to include strap (Comet) brake to provide drag pressure to reel axle. Location [#LOC]	$3,122
5130-0102	Junction box Circle-D with four (4) 3-wire 120Volt 20 Amp Hubbel model HBL7310B twist lock receptacles. Located on cord for reel in [#LOC].	$908
5130-0103	Junction box Circle-D with four (4) 3-wire NEMA L5-20 110 volt 20 amp GFCI twist lock receptacles with 220V feed. Located on cord for reel in [#LOC].	$908
5130-0104	Cord reel electric with 150' of 10/4 black cable. Location: [#LOC].	$1,920
5130-0105	Cord reel electric CMW 6020 with 200' of 10/3 yellow cord. Location: [#LOC].	$5,700
5130-0107	Cord reel electric with 200' of 12/3 yellow cable. Locate [#LOC].	$2,528
5130-0108	Cord reel electric with 150' of 10/4 yellow cable. Reel has 3 conductor cover IPO 4 (for narrower reel). Location: [#LOC].	$3,046
5130-0109	Junction box Circle D with four (4) 3-wire 20 amp receptacles, two (2) twist lock NEMA L 5-20 and two (2) straight blade NEMA 5-20 receptacles. Located on cord for reel in [#LOC].	$775
5130-0111	Stirrup style cord reel rewind switch. Location: [#LOC].	$179
5130-0112	Junction box Akron with (3) NEMA L5-20 GFCI twistlock and (1) NEMA L6-20 220V twist lock receptacle. Located on cord for reel in [#LOC].	$663
5130-0114	Hydraulic/Air reel rollers mounted through panel. Location(s): [#LOC].	$340
5130-0115	Junction box Akron with (2) NEMA L5-15 GFCI twistlock and (2) NEMA L14-20 120V/240V twist lock receptacle. Located on cord for reel in [#LOC].	$663
5130-0116	Optional Comet (friction) brake for Hannay cord reel (EA).	$71
5130-0120	Cord reel electric painted black from manufacturer with 200' of 10/3 black cable. Locate [#LOC].	$2,086
5130-0121	Junction box Akron with four (4) 3-wire NEMA L5-15 110 volt 15 amp twist lock receptacles. Located [#LOC].	$566
5130-0122	Cord connector. Hubbell 3 wire NEMA L5-15 twist lock female with yellow seal-tite cover located on cord for reel in [#LOC].	$129
5130-0123	Smooth plate cord reel cover with black Durabak finish over reel. Use rollers provided with reel on cover IPO E-One supplied if applicable. Location: [#LOC]	$714
5130-0124	Junction box Circle-D with (3) L5-20 twist lock and (1) 5-20 110V straight blade duplex receptacles. Located on cord for reel in [#LOC].	$719
5130-0125	Cord reel Hannay electric low profile with 200' of 10/3 black cable. Locate [#LOC].	$2,692
5130-0126	Junction box Circle-D with (1) L5-20 twist lock and (3) 5-15 110Volt straight blade duplex receptacles. Located on cord for reel in [#LOC].	$719
5130-0127	Cord reel electric with 175' of 10/3 yellow cable. Location [#LOC].	$3,046
5150-0003	Weldon auxiliary turn signal model 9186-8560 (PR). Location: [#LOC]	$201
5150-0006	Whelen 600 series LED horizontal mount tail lights. Includes LED stop/tail, arrow turn and halogen back-up lights with horizontal Cast 3 housing and weatherproof connectors.	$1,307
5150-0007	Whelen 600 series LED vertical mount tail lights. Includes LED stop/tail, arrow turn and halogen back-up lights with vertical Cast 3 housing and weatherproof connectors.	$1,277
5150-0008	Whelen 600 series LED vertical mount tail lights. Includes LED stop/tail, arrow turn and halogen back-up lights with vertical Cast 4 housing and weatherproof connectors.	$1,561
5150-0010	Whelen 600 series LED horizontal mount tail lights. Includes LED stop/tail, turn and halogen back-up lights. Available on G067, L193 and Q100/114 only. With weatherproof connectors.	$1,403
5150-0011	Whelen 600 series LED vertical mount tail lights. Includes LED stop, tail, turn and halogen back-up lights with vertical Cast 3 housing and weatherproof connectors.	$1,375
5150-0012	Whelen 600 series LED vertical mount tail lights. Includes LED stop/tail, turn and halogen back-up lights with vertical Cast 4 housing and weatherproof connectors.	$1,465
5150-0015	Whelen 600 series vertical mount taillights. Includes incandescent stop/tail, arrow turn and halogen backup lights with vertical Cast 4 housing and weatherproof connectors.	$711
5150-0017	License plate light LED with chrome housing located at the rear of the body.	$133
5150-0018	Marker lights additional amber LED Trucklite Model 21 (PR). Location: [#LOC]	$170
5150-0019	Marker lights addtional red LED Trucklite Model 21 (PR). Location: [#LOC]	$170
5150-0020	Weldon model 1010 LED / incandescent tail lights. Includes red LED stop/tail/turn and clear incandescent back-up.	$368
5150-0022	Marker light LED body package. Commercial pumper bodies only.	$778
5150-0023	Weldon Model 1010 LED / incandescent tail lights. Includes red LED stop/tail, amber LED turn and clear incandescent back-up.	$535
5150-0025	Marker light LED body/cab package. E-One custom cab and pumper or tanker body only.	$1,306
5150-0032	Bracket license plate at rear of body.	$39
5150-0036	Truck-Lite LED tail lights. Includes 4" red LED stop/tail, amber LED turn and clear LED back-up.	$823
5150-0037	Zico backing light (PR) with white pained housing model #ZQL-RV-H7614. Location: [#LOC].	$386
5150-0039	Marker lights Britax amber/red rubber housed mounted on the rear body corners angled down.	$290
5150-0042	Federal Signal LED tail lights. Includes 4" diameter red LED stop/tail, amber turn and LED clear back-up.	$560
5150-0050	Zico backing lights (PR) with polished stainless steel housing model ZQL-SS-H7614. Location: [#LOC].	$596

5150-0052	Code 3 65STK4 vertical mount tail lights. Includes red LED stop/tail, amber LED turn and white LED back-up lights.	$1,989
5150-0053	Code 3 65PKG vertical mount tail lights. Includes red LED stop/tail, amber arrow LED turn and white LED back-up lights.	$1,620
5150-0054	Whelen 600 series LED vertical mount taillights. Includes LED stop/tail, turn and backup lights with vertical Cast 4 housing and weatherproof connectors.	$1,874
5150-0055	Whelen 600 series LED horizontal mount tail lights. Includes LED stop/tail, arrow turn and back-up lights with horizontal Cast 3 housing and weatherproof connectors.	$2,066
5150-0056	Whelen 600 series LED vertical mount tail lights. Includes LED stop/tail, arrow turn and back-up lights with vertical Cast 3 housing and weatherproof connectors.	$2,037
5150-0057	Whelen 600 series LED vertical mount tail lights. Includes LED stop/tail, arrow turn and back-up lights with vertical Cast 4 housing and weatherproof connectors.	$2,322
5150-0058	Federal Signal QuadraFlare LED vertical mount tail lights. Includes LED stop/tail, arrow turn and back-up lights with vertical Cast 4 housing and weatherproof connectors.	$1,274
5150-0059	Federal Signal QuadraFlare LED vertical mount tail lights. Includes LED stop/tail, arrow turn and back-up lights with vertical Cast 3 housing and weatherproof connectors.	$1,112
5150-0060	Federal Signal QuadraFlare LED vertical mount tail lights. Includes LED stop/tail, turn and back-up lights with vertical Cast 3 housing and weatherproof connectors.	$1,216
5150-0062	Federal Signal QuadraFlare LED horizontal mount taillights. Includes LED stop/tail, arrow turn and backup lights with horizontal Cast 3 housing and weatherproof connectors.	$1,294
5150-0063	Double chrome trim ring for Weldon 1010 tail lights (PR).	$269
5150-0064	Whelen PSR00XRR series LED red third brake light. Light mounted above recessed traffic advisor.	$324
5150-0066	Marker light LED body/cab package. E-One custom cab and pumper or tanker body only. Model 10 front marker lights mounted on top of cab.	$1,539
5150-0068	Marker lights Britax LED amber/red rubber housed mounted on the rear body corners angled down.	$396
5150-0069	Federal Signal QuadraFlare LED vertical mount taillights. Includes LED stop/tail, arrow turn and backup lights with weatherproof connectors.	$1,294
5150-0071	Light Whelen model PSR00XRR LED (EA) red 3rd brake light. Location: [#LOC].	$191
5150-0072	Marker light LED body/cab package. E-One custom cab and pumper or tanker body only. Includes: Trucklite Model 10 front marker lights mounted on top of cab, Trucklite rear upper body and Whelen lower cab/body marker lights.	$1,998
5150-0073	Marker lights additional red LED Whelen Model 50R00MRR (PR). Location: [#LOC]	$246
5150-0074	Marker lights additional amber LED Whelen Model 50A00MAR (PR). Location: [#LOC]	$246
5150-0075	Whelen 600 series LED vertical mount taillights. Includes LED stop/tail, arrow turn and backup lights with individual chrome flanges and weatherproof connectors.	$2,753
5150-0076	Whelen 700 LED auxiliary chevron turn signal (PR) with 15 degree castings. Location: [#LOC]	$720
5150-0077	Whelen 900 series LED tail lights. Includes LED stop/tail, arrow turn and back-up lights with weatherproof connectors.	$4,965
5150-0078	Truck-Lite model #35720 guards for front LED clearance lights on cab.	$91
5150-0079	Spring mounted plate for rear DOT lighting. Locate centered below rear of body.	$362
5150-0080	Weldon auxiliary turn signal model 9186-8580 LED (PR). Location: [#LOC].	$274
5150-0081	Light Whelen 500 model 5SR00XRR red LED 3rd brake light (ea). Location: [#LOC].	$215
5150-0082	Whelen 600 series LED vertical mount taillights. Includes LED stop/tail, arrow turn in vertical Cast 3 housing with 900 series halogen backup lights down low and weatherproof connectors.	$1,696
5150-0091	Whelen M6 series LED vertical mount tail lights. Includes LED stop/tail, arrow turn and back-up lights with vertical 4 light housing and weatherproof connectors.	$1,616
5150-0093	Marker light LED body/cab package. E-One custom cab and stainless steel body only.	$1,306
5150-0098	Truck-Lite auxiliary turn signal model 60117Y LED (PR) with model 60719 stainless steel cover. Location: [#LOC].	$262
5150-0099	LED marker light cab and body package. E-ONE custom cab and SS body vehicles.	$1,306
5150-0101	Whelen M9 series LED taillights. Includes LED stop/tail, arrow turn and backup lights with weatherproof connectors.	$3,391
5150-0120	Whelen 600 LED auxiliary arrow turn signal (PR) with 15 degree castings. Location: [#LOC].	$656
5150-0121	Trucklite model MDL60 chrome bezels for front cab corner marker/turn lights.	$54
5150-0122	Marker lights addtional red LED Trucklite Model 15 (PR). Location: [#LOC].	$101
5150-0123	Marker lights addtional amber LED Trucklite Model 15 (PR). Location: [#LOC].	$101
5150-0126	Marker light LED cab package. E-One custom cab only.	$749
5150-0127	Whelen M6 series LED vertical mount tail lights. Includes LED stop/tail, arrow turn lights with vertical 3 light housing (PR) with M9LZC Super LED scene lights (PR), with chrome flanges and weatherproof connectors.	$2,534
5150-0130	License plate light LED with chrome housing located at the rear of the body driver side down low.	$133
5150-0133	License plate light LED with chrome housing located at the rear of the body below B1 entry door.	$133
5150-0134	License plate light incandescent with chrome housing located at the rear of the body.	$133
5150-0145	Marker light LED body/cab package. E-One custom cab and SS pumper body.	$1,306
5150-0146	Taillights Federal Signal DOT STT/BU. Includes 4" LED red stop/tail/turn and 4" LED clear back-up lights.	$274
5150-0147	Whelen 600 series LED vertical mount tail lights. Includes LED stop/tail, arrow turn and halogen back-up lights with individual chrome flanges and weatherproof connectors.	$1,993
5150-0148	Bracket license plate at rear of body. Fabricated from .125" smooth plate aluminum painted job color.	$47
5150-0149	License plate light incandescent with chrome housing located at the rear of the body below tailboard.	$55

5150-0150	Weldon LED vertical mount tail lights. Includes LED stop, tail,l turn and halogen back-up lights with vertical 4 housing and weatherproof connectors.	$1,871
5150-0152	Federal Signal QuadraFlare LED vertical mount tail lights. Includes LED stop/tail, arrow turn and back-up lights with individual chrome bezels and weatherproof connectors.	$1,057
5150-0154	License plate light EON LED located at the rear of the body.	$111
5150-0155	Whelen 600 series LED vertical mount taillights. Includes LED stop/tail, arrow turn and backup lights with individual black flanges and weatherproof connectors.	$2,227
5150-0156	Marker lights Britax model L428 LED amber/red rubber housed (PR). Location: [#LOC].	$396
5150-0158	Whelen M6 series LED vertical mount tail lights with clear lenses. Includes LED stop/tail, arrow turn and back-up lights with vertical 4 light housing and weatherproof connectors.	$1,616
5200-0000	Breaker box 8 place single phase. Includes main breaker. Note: Main breaker occupies 2 places leaving 6 available. Locate [#LOC].	$836
5200-0001	Breaker box 12 place single phase. Includes main breaker. Note: If gen is 6KW or less, main will occupy 2 places leaving 10 available. Locate [#LOC].	$873
5200-0002	Breaker Box 20 Place Single Phase. Includes main breaker. Locate [#LOC].	$889
5200-0003	Breaker box 2 place single phase (70A 110/220V). Location [#LOC].	$372
5200-0007	Breaker box 30 place single phase. Includes main breaker. Maximum generator size 48 KW. Location: [#LOC].	$1,378
5200-0008	Breaker box 16 place single phase. Includes main breaker. Locate [#LOC].	$877
5200-0009	Breaker box 8 place single phase; no main breaker. For use with multiple options wired through shoreline power with 30A or larger inlet recept. Locate adjacent to main breaker box.	$651
5250-0003	Generator Onan 6KW diesel. Requires fuel pick up option in chassis and 3rd party testing. Generator location: [#LOC].	$14,967
5250-0004	Generator Onan 10KW diesel. Requires fuel pick up option in chassis and 3rd party testing. Generator location: [#LOC].	$19,107
5250-0005	Generator Onan 6KW hydraulic. Includes generator control / PTO engage switch and a gauge panel located adjacent to breaker box. Generator location: [#LOC].	$12,801
5250-0006	Generator Onan 8KW hydraulic. Includes generator control/PTO engage switch and a gauge panel located adjacent to circuit breaker box. Generator location: [#LOC].	$14,407
5250-0007	Generator Onan 10KW hydraulic. Includes generator control / PTO engage switch and a gauge panel located adjacent to breaker box. Generator location: [#LOC].	$14,960
5250-0008	Generator Harrison 15KW MPC hydraulic. Includes generator control / PTO engage switch and a gauge panel located adjacent to breaker box. Generator location: [#LOC].	$24,801
5250-0009	Generator Harrison 20KW MPC hydraulic. Includes generator control / PTO engage switch and a gauge panel located adjacent to breaker box. Generator location: [#LOC].	$26,795
5250-0012	Generator Onan 15KW hydraulic. Includes generator control/PTO engage switch and a gauge panel located adjacent to circuit breaker box. Generator location: [#LOC].	$21,607
5250-0013	Generator Onan 20KW hydraulic. Includes generator control / PTO engage switch and a gauge panel located adjacent to breaker box. N/A on units with a water pump due to frequency fluctuations. Generator location: [#LOC].	$35,426
5250-0017	Generator Honda EM5000SXK with 4.5KW continuous output. Generator location: [#LOC].	$6,059
5250-0026	Generator Smart Power 10KW hydraulic model ER110. Includes generator control / PTO engage switch and a gauge panel located adjacent to breaker box. Generator location: [#LOC].	$17,066
5250-0036	Generator Smart Power 6KW hydraulic model HR-6 (with top mount cooler). Includes generator control / PTO engage switch and a gauge panel located adjacent to breaker box. Generator location: [#LOC].	$13,591
5250-0037	Generator Smart Power 8KW hydraulic model HR-8 (with top mount cooler). Includes generator control/PTO engagement switch and a gauge panel located adjacent to the circuit breaker box. Generator location: [#LOC].	$15,532
5250-0038	Generator Smart Power 10KW hydraulic model HR-110 (with top mount cooler). Includes generator control / PTO engage switch and a gauge panel located adjacent to breaker box. Generator location: [#LOC].	$17,066
5250-0039	Generator Harrison 10KW MCR hydraulic. Includes generator control / PTO engage switch and a gauge panel located adjacent to breaker box. Generator location: [#LOC].	$16,147
5250-0040	Generator Harrison 6KW MCR hydraulic. Includes generator control / PTO engage switch and a gauge panel located adjacent to breaker box. Generator location: [#LOC].	$12,577
5250-0042	Generator Westerbeke 5KW diesel (model#5.0 BCDB). Requires fuel pick up option in chassis and 3rd party testing. Generator location: [#LOC].	$15,476
5250-0043	Dealer installed generator. Option includes space only. Dealer responsible for NFPA required 3rd party generator testing.	$295
5250-0045	Generator Harrison 30KW MPC hydraulic. Includes generator control / PTO engage switch and a gauge panel located adjacent to breaker box. Generator location: [#LOC].	$32,841
5250-0047	Generator Smart Power 15KW hydraulic model HR-15 (with top mount cooler). Includes generator control / PTO engage switch and a gauge panel located adjacent to breaker box. Generator location: [#LOC].	$22,701
5250-0050	Generator Smart Power 20KW hydraulic model HR-20 (with top mount cooler). Includes generator control / PTO engage switch and a gauge panel located adjacent to breaker box. Generator location: [#LOC].	$24,959
5250-0051	Locate generator gauge panel on pump operators panel ipo next to breaker box.	$119
5250-0054	Generator Onan 7.5KW diesel. Requires fuel pick up option in chassis and 3rd party testing. Generator location: [#LOC].	$13,413
5250-0055	Generator Smart Power 8KW hydraulic model ER8. Includes generator control / PTO engage switch and a gauge panel located adjacent to breaker box. Generator location: [#LOC]	$18,391

5250-0056	PTO engage switch to be wired as follows: switch in the down position (PTO off) and switch in the up position (PTO engage).	$114
5250-0060	Dealer installed Onan 6KW diesel generator located [#LOC]. Option includes space only. Dealer responsible for NFPA required 3rd party generator testing.	$295
5250-0061	Dealer installed Onan 6KW hydraulic generator located [#LOC]. Option includes space only. Dealer responsible for NFPA required 3rd party generator testing.	$295
5250-0062	Dealer installed Onan 8KW hydraulic generator located [#LOC]. Option includes space only. Dealer responsible for NFPA required 3rd party generator testing.	$295
5250-0063	Dealer installed Onan 10KW hydraulic generator located [#LOC]. Option includes space only. Dealer responsible for NFPA required 3rd party generator testing.	$295
5250-0064	Dealer installed Onan 15KW hydraulic generator located [#LOC]. Option includes space only. Dealer responsible for NFPA required 3rd party generator testing.	$295
5250-0065	Dealer installed Onan 20KW hydraulic generator located [#LOC]. Option includes space only. Dealer responsible for NFPA required 3rd party generator testing.	$295
5250-0066	Dealer installed Smart Power 10KW hydraulic model ER110 generator located [#LOC]. Option includes space only. Dealer responsible for NFPA required 3rd party generator testing.	$295
5250-0067	Dealer installed Smart Power 10KW hydraulic model HR110 generator located [#LOC]. Option includes space only. Dealer responsible for NFPA required 3rd party generator testing.	$295
5250-0068	Dealer installed Smart Power 6KW hydraulic model HR-6 (with top mount cooler) generator located [#LOC]. Option includes space only. Dealer responsible for NFPA required 3rd party generator testing.	$295
5250-0069	Dealer installed Smart Power 8KW hydraulic model HR-8 (with top mount cooler) generator located [#LOC]. Option includes space only. Dealer responsible for NFPA required 3rd party generator testing.	$295
5250-0070	Dealer installed Smart Power 15KW hydraulic model HR-15 (with top mount cooler) generator located [#LOC]. Option includes space only. Dealer responsible for NFPA required 3rd party generator testing.	$295
5250-0071	Dealer installed Smart Power 20KW hydraulic model HR-20 (with top mount cooler) generator located [#LOC]. Option includes space only. Dealer responsible for NFPA required 3rd party generator testing.	$295
5250-0072	Dealer installed Harrison 6KW MCR hydraulic generator located [#LOC]. Option includes space only. Dealer responsible for NFPA required 3rd party generator testing.	$295
5250-0073	Dealer installed Harrison 10KW MCR hydraulic generator located [#LOC]. Option includes space only. Dealer responsible for NFPA required 3rd party generator testing.	$295
5250-0074	Dealer installed Harrison 30KW MPC hydraulic generator located [#LOC]. Option includes space only. Dealer responsible for NFPA required 3rd party generator testing.	$295
5250-0075	Guarded generator PTO engage toggle switch. Located driver side cab switch panel. For use on Typhoon X and CIIX cabs only.	$193
5250-0076	Guarded PTO engage rocker switch. Located driver side cab switch panel. For use on Quest, CIIX LTH aerial and commercial cabs.	$193
5250-0077	Generator Harrison 8KW MCR hydraulic. Includes generator control / PTO engage switch and a gauge panel located adjacent to breaker box. Generator location: [#LOC].	$15,972
5250-0078	Generator Smart Power 10KW hydraulic Liberator model Li15 (with top mount cooler and XRT hyd tool pump). Includes generator control / PTO engage switch and a gauge panel located adjacent to breaker box. Generator location: [#LOC].	$26,376
5250-0080	Dealer installed 5KW gas generator located [#LOC]. Option includes space only. Dealer responsible for NFPA required 3rd party generator testing.	$295
5250-0082	Dealer installed Westerbeke 10KW diesel generator located [#LOC]. Option includes space only. Dealer responsible for NFPA required 3rd party generator testing.	$295
5250-0092	Generator Honda EM5000SXK with 4.5KW continuous output. NFPA rated at 3.3KW. Generator location: [#LOC].	$5,490
5250-0093	Generator Smart Power 20KW hydraulic model HR-20 (with top mount cooler). Includes generator control / PTO engage switch and a gauge panel located on pump panel. Generator location: [#LOC]	$24,959
5250-0094	Harrison gas powered 5.5KW generator. Includes alternator duct and attached fuel tank. Locate in compartment [#LOC].	$4,166
5250-0095	Harrison gas powered generator model DBR5500. Includes remote start at pump operator panel, alternator duct and attached fuel tank. Locate in: [#LOC].	$4,589
5250-0106	Westerbeke 10KW BTDAR diesel single phase generator and XRT Hydraulic tool system with 3 tool capability. 10,500 PSI system. Includes selector valve for each reel, hyd res / filter and remote cooler. Requires fuel pick up option in chassis and 3rd party testing. Locate in dunnage pan offset to officer side. Route (4) lead lines to B1 compt.	$45,856
5250-0111	Westerbeke 10KW BTDAR diesel single phase generator and XRT Hydraulic tool system with 2 tool capability. 10,500 PSI system. Includes selector valve for each reel, hyd res / filter. Requires fuel pick up option in chassis and 3rd party testing. Locate in [#LOC]. Route (4) lead lines to B1 compt.	$45,856
5250-0115	Generator Harrison 15KW MPC hydraulic w/IHT. Includes tool circuit manifold, aux heat exchanger, generator control / PTO engage switch and a gauge panel located adjacent to breaker box. [#LOC]	$33,287
5250-0116	Dealer installed Powertech 8KW diesel generator located [#LOC]. Option includes space only. Dealer responsible for NFPA required 3rd party generator testing.	$295
5250-0117	Generator Harrison 8KW MAS hydraulic. Includes generator control/PTO engage switch and a gauge panel located adjacent to breaker box. Generator location: [#LOC].	$15,972

5250-0118	Generator Harrison 8KW LPG hydraulic. Includes generator control switch to engage the PTO and start the generator and a gauge panel located adjacent to breaker box. Generator location: [#LOC].	$15,673
5250-0123	Generator Honda EM4000 with 3.5KW continuous output. NFPA rated at 3.3KW. Generator location: [#LOC].	$5,490
5250-0124	Generator Smart Power 6KW hydraulic model LR-6 Light Rescue Series (FORD 250, 350, 450, 550 Chassis). Includes generator control / PTO engage switch and a gauge panel located adjacent to breaker box. Generator location:[#LOC].	$14,379
5250-0125	Generator Harrison 10KW LPG hydraulic. Includes generator control/PTO engage switch and a gauge panel located adjacent to breaker box. Generator location: [#LOC].	$16,147
5250-0128	Generator Smart Power 15KW hydraulic Liberator model Li20 (with top mount cooler and XRT hyd tool pump). Includes generator control switch and a gauge panel located adjacent to breaker box. Generator location: [#LOC].	$30,784
5250-0129	Generator Harrison 8KW MDS hydraulic. Includes generator control/PTO engage switch, gauge panel located adjacent to breaker box and 80cc hyd pump (requires driver side port on EVS3000 trans). Generator location: [#LOC].	$19,938
5250-0130	Generator Harrison 6KW MDS hydraulic w/IHT for continuous accessory. Includes aux hyd system manifold, integral aux heat exchanger, generator control / PTO switch, aux system / PTO switch, (both switches accessible by driver) and a generator gauge panel located adjacent to breaker box. Generator location: [#LOC].	$25,075
5250-0131	Generator toggle switch (IPOS keyed switch). Located: [#LOC].	$193
5250-0132	Generator Harrison 8KW MDS hydraulic w/IHT for continuous accessory. Includes aux hyd system manifold, integral aux heat exchanger, generator control / PTO switch, aux system / PTO switch (both switches accessible by driver), and a generator gauge panel located adjacent to breaker box. Generator location: [#LOC].	$26,976
5250-0133	Generator Harrison 10KW MDS hydraulic w/IHT for continuous accessory. Includes aux hyd system manifold, integral aux heat exchanger, generator control / PTO switch, aux system / PTO switch (both switches accessible by driver), and a generator gauge panel located adjacent to breaker box. Generator location: [#LOC].	$28,040
5250-0134	Generator Harrison 6KW LPG hydraulic with remote mounted reservoir. Includes generator control / PTO engage switch and a gauge panel located adjacent to breaker box. Generator location: [#LOC].	$16,499
5250-0135	Generator Harrison 10KW MCR hydraulic w/IHT for continuous accessory. Includes aux hyd system manifold, aux heat exchanger, generator control / PTO switch, aux system / PTO switch, (both switches accessible by driver) and a generator gauge panel located adjacent to breaker box. Generator location: [#LOC].	$25,369
5250-0137	Generator Harrison 10KW LPG hydraulic with remote reservoir. Includes generator control/PTO engage switch and a gauge panel located adjacent to breaker box. Generator location: [#LOC].	$16,147
5250-0138	Generator Smart Power 20KW hydraulic Liberator model Li25 (with top mount cooler and XRT hyd tool pump). Includes generator control switch, guarded PTO switch and a gauge panel located adjacent to breaker box. Generator location: [#LOC].	$37,563
5250-0139	Dealer installed Westerbeke 8W diesel generator located dunnage pan offset to officer side. Option includes space only. Dealer responsible for NFPA required 3rd party generator testing.	$295
5250-0140	Generator (FOR US AIR FORCE ONLY) Onan 10KW diesel. Requires fuel pick up option in chassis and 3rd party testing. Generator location:[#LOC].	$14,145
5250-0141	Generator Smart Power 6KW hydraulic model ER6. Includes generator control / PTO engage switch and a gauge panel located adjacent to breaker box. Generator location: [#LOC].	$13,591
5250-0142	Generator Harrison 6KW LPG hydraulic. Includes generator control / PTO engage switch and a gauge panel located adjacent to breaker box. Generator location: [#LOC].	$16,499
5250-0143	Generator Onan 8KW hydraulic 50 Hz. Includes generator control/PTO engage switch and a gauge panel located adjacent to circuit breaker box. Generator location: [#LOC].	$14,960
5255-0001	3rd party generator test with pump.	$89
5260-0000	Generator air deflector for Onan hydraulic. When generator is compartment mounted or mounted in a pan on an aerial body, engineering is to specify updraft or downdraft.	$437
5260-0001	Remote start for diesel generator. Location: [#LOC].	$412
5260-0002	Remote control starting kit for Honda EM3800SX, EM4000, EM5000SX and EM6500SX generators. Locate [#LOC].	$712
5260-0004	Generator prewire for dealer supplied and installed 5 KW portable generator. Includes 12 volt wiring and cable between breaker box. Prewire to [#LOC].	$267
5260-0006	Compartment door(s) of compartment mounted generator to have interlock.	$200
5260-0008	Generator prewire for dealer supplied and installed 6.5KW portable generator. Includes 12volt wiring and cable between breaker box. Prewire to [#LOC].	$327
5260-0009	Generator oil drain valve with tube extending below driver side pump panel.	$209
5260-0010	Remote start switches for Honda EM3800SX portable generator. Honda remote start kit with E-ONE supplied switches on pump panel. This option may void factory generator warranty from Honda.	$1,000
5260-0011	Extend exhaust pipe from dunnage pan mounted portable generator into pump compartment using stainless steel flexible pipe.	$94
5260-0013	Locate generator gauge panel to the outboard side of the breaker box.	$119
5260-0014	Oil drain valve with tube extending below officer side pump panel.	$209
5260-0015	Generator prewire for dealer supplied and installed 2.5 KW portable generator. Includes 12volt wiring and cable between breaker box with #66W47 posi-lock Woodhead recpt. Prewire to R1 forward wall up high.	$442

5260-0016	Extend exhaust pipe from dunnage pan mounted portable generator in line with main exhaust system using stainless steel flexible pipe.	$94
5260-0017	Compartment door(s) of compartment mounted compressor to have interlock.	$200
5260-0019	The exhaust of the gas generator to be routed downward and to the exit to below the unit to the officer side of the unit.	$265
5260-0020	Compartment door(s) of compartment mounted electric dump valve to have interlock.	$200
5260-0021	Oil drain valve with tube extending below driver side pump panel.	$209
5260-0023	Generator platform to raise the generator up 8" in the storage pan. Generator raised due to heat from generator exhaust.	$396
5260-0024	Locate generator gauge panel on the pump operators panel in lieu of standard location adjacent to breaker box.	$119
5260-0025	Generator prewire for dealer supplied and installed 3.5 KW portable generator (Honda or other with equivalent dimensions). Includes 12 volt wiring and A/C cabling to breaker box. Prewire to [#LOC].	$267
5260-0027	Locate generator gauge panel above breaker box on a formed bracket. See photos on file with sales.	$119
5260-0032	Bolt-on diamond plate cover on top of generator. See photos on file.	$259
5260-0033	Diamond plate guard to protect the generator's wiring and harnesses in the dunnage pan. The guard will go full height of the dunnage pan, forward to rear, separating the generator and breaker box from the other side (driver's side) of the dunnage pan.	$332
5260-0034	Vertical exhaust for Harrison MCR and MPC generators 6KW - 20KW.	$506
5260-0037	Generated auxiliary 12V power system wired through diesel generator. System includes (3) Power Max 100A 12V converters to power VMUX electrical system. Generator not included (engine off but ignition must be in "on" posiion). Requires Engineering review for generator and 12V power requirements.	$6,339
5260-0039	Generator prewire for dealer supplied and installed 5.5KW portable generator. Includes 12volt wiring and cable between breaker box. Prewire to dunnage pan.	$379
5260-0041	Idle reduction system powered by a diesel generator. System includes (2) Power Max 100A 12V converters to power the vehicle electrical system. Requires diesel generator. Requires Engineering review for generator and 12V power requirements.	$3,963
5260-0042	Compartment door(s) on officer side to be interlocked with ladder rack.	$200
5260-0046	Generator prewire for dealer supplied and installed 2KW portable generator. Includes 12 volt wiring and cable between breaker box. Prewire to [#LOC].	$295
5260-0047	Aesthetic shield for hydraulic generator on outboard end of dunnage pan. To be 3-sided, open top, and constructed from diamond plate.	$437
5260-0048	Hinged diamond plate cover with out access hole on top of generator. Cover is to be hinged so as to tilt forward of the generator. See photos on file.	$259
5300-0000	Light bar Code 3 model XL5100 (PR) 22" Long. All red lens. Location: [#LOC]	$1,216
5300-0003	Light bar Code 3 model 556A3 56" long with all red lenses. Location: Centered on the front cab roof	$1,673
5300-0004	Light bar Code 3 model 718A1 (PR) 18" Long. Red Upper / Clear Lower lens. Location: [#LOC].	$1,371
5300-0015	Light bars Federal Signal ADX2201 LED (PR) with red lenses. Location: [#LOC].	$3,031
5300-0017	Light bar Federal Signal Jet Stream 48" LED with R/W/R lenses, red diodes and single traffic clearing light. Location: Centered on the front cab roof	$2,485
5300-0020	Light bar Federal Signal JetStream JLX54HH-00011 54" LED. Red Solaris reflectors with red domes each side and (2) center clear TCL lights. Location: Centered on the front cab roof.	$2,765
5300-0021	Light bar Federal Signal JetSolaris 60" LED. Red Solaris reflectors with clear domes. NFPA compliant. Does not require 2 addl side facing bars. Location: Centered on the front cab roof.	$2,628
5300-0023	Light bars Federal Signal 22I (PR). Location: [#LOC].	$1,098
5300-0024	Light bar Federal Signal Aerodynic 25RQL-Fast 52" with red/clear lens. Location: Centered on the front cab roof.	$1,524
5300-0026	Light bar Federal Signal Aerodynic ADL5202 52" with red/clear/red lens. Location: Centered on the front cab roof.	$1,440
5300-0028	Light bar Federal Signal Aerodynic ADX5271 52" with 10 red Solaris LED reflectors. Location: Centered on the front cab roof	$2,919
5300-0029	Light bar Federal Signal AeroDynic ADX7201 72" with 8 red Solaris LED reflectors. Location: Centered on the front cab roof.	$3,058
5300-0030	Light bar Federal Signal Aerodynic AH1LC 72" with red/clear lens. Location: Centered on the front cab roof.	$1,837
5300-0031	Light bar Federal Signal Aerodynic AH2LC 72" with red/clear lens. Location: Centered on the front cab roof	$1,910
5300-0044	Light bar Federal Signal Vector VC6001. Location: Centered on the front cab roof	$2,155
5300-0047	Light bar Whelen model 9M380NQ66 w/MKEZ7 mounts. Location: Centered on the front cab roof.	$2,777
5300-0048	Light bar Whelen Centurion model C300700N 72". Location: Centered on the front cab roof	$1,696
5300-0049	Light bar Whelen Edge model 9M380NV 66" with MKEZ7 mounts. Location: Centered on the front cab roof	$3,177
5300-0050	Light bar Whelen Edge model 9M387NQ 72" with MKEZ7 mounts without rear facing strobes. N/A on INTL Chassis. Location: Centered on the front cab roof	$2,922
5300-0051	Light bar Whelen model 9M387NV 72" all strobe with MKEZ7 mounts. N/A with Vista roof with front facing windows. N/A on INTL Chassis. Location: Centered on the front cab roof	$2,922
5300-0053	Light bar Whelen Freedom model FN66QLED 66" with MKEZ7 mounts. All LED light bar without rear facing LEDs. Location: Centered on the front cab roof.	$3,763
5300-0055	Light bar Whelen Freedom model FN72QLED 72" LED with MKEZ7 mounts and clear lenses. Location: Centered on the front cab roof.	$3,859

5300-0056	Light bar Whelen Freedom model FN72VLED 72" LED with MKEZ7 mounts. N/A INTL Chassis or Vista roofs with front facing windows. Location: Centered on the front cab roof.	$3,859
5300-0059	Light bar Whelen model 9MINNFPA 28 1/4" strobe with MKEZ7 mounts (PR). Location: [#LOC]	$2,959
5300-0060	Light bar Code 3 model 574NFPA1 74" with all red lenses. Location: Centered on the front cab roof.	$1,935
5300-0065	Light bar Federal Signal ADX2202 LED (PR) with red lenses. Located side facing only. Not NFPA compliant forward facing. Location: [#LOC].	$1,879
5300-0070	Light bar Federal Signal JetStream JLX5401 LED 54". Red Solaris reflectors with red domes. Location: Centered on the front cab roof	$2,250
5300-0074	Whelen Mini-Freedom LED light bars (PR) model FNMINI 24" with red/clear lenses and low profile MK9 mounts. Location: [#LOC].	$4,364
5300-0082	Whelen Mini-Freedom LED side facing light bars (PR) model FT8RRRRF 24" with MKEZ7 mounts. Location: [#LOC]. Lens color: Clear.	$4,181
5300-0084	Whelen Mini-Freedom LED light bars (PR) model FNMINI 24" with red/clear lenses and MKEZ7 mounts. Location: [#LOC].	$4,364
5300-0086	Light bar Code 3 MX model 758A1. Upper deck contains (4) rotators (2 ea side) with red lenses and (2) clear oscilasers. Lower deck contains (2) frt red halogen flashers outboard, intersection sweeps and clear lenses. Loc: Centered on the frt cab roof.	$1,867
5300-0087	Light bar Code 3 model XL5100 22" Long. All red lens. Location: Centered on the front cab roof.	$610
5300-0088	Light bar Whelen Freedom model FN55VLED 55" LED with MKEZ7 mounts. N/A with Vista roofs with front facing windows. Location: Centered on the front cab roof.	$3,409
5300-0089	Light bar Code 3 MX model 769A1. Upper deck contains 9 rotators w/ red lenses. Lower deck contains intersection sweeps w/clear lenses. Location: Centered on the front cab roof.	$1,934
5300-0091	Light bar Code 3 Excalibur model X58A. Upper deck contains (4) rotators (two ea side) with red lenses and (2) white oscilasers with clear lenses. Lower deck contains (4) takedown lights and two alley lights. Location: Centered on the front cab roof.	$2,121
5300-0092	Light bar Whelen Freedom model FN55QLED 55" LED with takedown lights and MKEZ7 mounts. Location: Centered on the front cab roof.	$3,694
5300-0093	Light bar Whelen Freedom model FN72VLED 72" LED with Opticom and MKEZ7 mounts. N/A INTL Chassis or Vista roofs with front facing windows. Location: Centered on the front cab roof.	$6,459
5300-0094	Light bar Federal Signal 22I (ADL2201Y) with 175 FPM rotators (PR). Location: [#LOC]	$1,098
5300-0095	Light bar Code 3 MX model 769 with R/C/C/C/B lenses. Upper deck contains 9 rotators. Lower deck contains intersection sweeps w/clear lenses. Location: Centered on the front cab roof.	$1,934
5300-0096	Light bar Code 3 Javelin LED model JX67A. Location: Centered on the front cab roof.	$6,490
5300-0099	Light bar Federal Signal JLX21 LED (PR). Located side facing only. Location: [#LOC].	$1,842
5300-0100	Light bar Whelen Freedom model FN72QLED 72" LED with clear lenses and MKEZ7 mounts. Includes (8) red LED and (2) white LED. N/A INTL Chassis. Location: Centered on the front cab roof.	$4,289
5300-0101	Light bar Federal Signal Aerodynic ADL5202 52" with blue lenses. Location: Centered on the front cab roof.	$1,440
5300-0102	Whelen Mini-Freedom LED side facing light bars (PR) model FT8RCRCF 24" with MKEZ7 mounts. Location: [#LOC]. Lense colors: Clear.	$4,149
5300-0103	Light bar Whelen Freedom model FN66QLED 66" LED with 795H Opticom, takedown lights and MKEZ7 mounts. Location: Centered on the front cab roof.	$5,326
5300-0105	Light bar Code 3 model 718A1 (PR) 18" Long. Red upper/clear lower lens driver side and blue upper/clear lower officer side. Location: [#LOC]	$1,186
5300-0106	Light bar Code 3 MX model 769 with B/B/C/R/R upper lenses clear lower lenses. Upper deck contains (8) rotators; (4) each side and alley lights. Lower deck contains intersection sweeps, (4) LED warning; (2) blue driver and (2) red officer. Includes pre-wire for opticom in the center of the upper deck. Location: Centered on the front cab roof. Requires 5300-0105.	$3,470
5300-0107	Light bar Code 3 MX7400-ALRC-777 58" long. Location: Centered on the front cab roof. Includes (1) steady burn red light for California DOT.	$5,022
5300-0108	Light bar Code 3 model MX7100-ALRC-724 (PR) 18" Long. Location: At angle behind main light bar with front corners of bars even with outside edge of main bar.	$1,218
5300-0110	Light bar Whelen Freedom model FN72QLED 72" LED with MK8H high mounts. Includes (12) red LED and (2) white LED. N/A INTL Chassis. Location: Centered on the front cab roof.	$5,419
5300-0111	Whelen Mini-Freedom LED side facing light bars (PR) model FT8RRRRF 24" with MK8H high mounts. Location: [#LOC]. Lens colors: Clear.	$4,377
5300-0113	Light bar Whelen Freedom model FL2RRRRF 72" LED with MKEZ7 mounts. Includes (10) red LEDs and (4) blue LEDs. N/A INTL Chassis. Location: Centered on the front cab roof.	$5,148
5300-0117	Light bar Code 3 model 729A (PR) 29" long. Red upper / clear lower lens. Location: [#LOC]	$3,476
5300-0118	Light bar Code 3 MX model 769A with R/W/W/W/R upper lenses and clear lower lenses. Upper deck contains (6) rotators and 3-M Opticom. Lower deck contains intersection sweeps, (6) red LED warning and (4) white LED warning. Location: Centered on the front cab roof.	$7,198
5300-0125	Light bar Whelen Freedom model FN82QLED 82" LED with MKEZ7 mounts and clear lenses. Includes (12) red, (2) white LEDs and pre-wire for Opticom. N/A commercial Chassis. Location: Centered on the front cab roof	$4,983
5300-0126	Light bar Whelen Freedom model FN72VLED 72" LED with 795H Opticom, (12) red LEDs, (2) clear LEDs and MKEZ7 mounts. N/A INTL Chassis or Vista roofs with front facing windows. Location: Centered on the front cab roof.	$7,903
5300-0128	Federal ADX7250 LED Light bar 72". Includes (12) Solaris 6-LED red reflectors, (4) Solaris 9-LED red reflectors, and (12) Solaris 6-LED white reflectors. Includes (2) flashers, (1) for red LEDs and (1) for white LEDs.	$4,784
5300-0129	Light bar Federal Signal ADX2205 LED (PR). Location: [#LOC]	$5,218

5300-0130	Light bar Whelen Freedom model FN82VLED 82" LED with 3M Opticom and MKEZ7 mounts. N/A INTL Chassis or Vista roofs with front facing windows. Location: Centered on the front cab roof	$6,168
5300-0131	Light bar Whelen model FFX2068 19" LED. Location: Centered front of cab below windshield	$1,655
5300-0137	Light bar Whelen Freedom model FN72VLED 72" LED with Opticom and MKEZ7 mounts. Includes (10) red LED and (2) white LED. N/A INTL Chassis. Location: Centered on the front cab roof.	$7,321
5300-0138	Light bar package, Federal Signal Escape LED (5) bar package. Includes: (1) 40" LED front bar w/ Opticom, (2) diagonal 26" LED bars and (2) 28" side LED bars.	$11,476
5300-0140	Light bar Whelen Freedom model FN72QLED 72" LED with MK8 high mounts and clear lenses. Includes (10) red LED and (4) white LED. N/A INTL Chassis. Location: Centered on the front cab roof.	$5,424
5300-0142	Light bar Federal Signal JetStream 60" LED. Red/White Solaris reflectors with clear domes. NFPA Compliant, does not require 2 addl side facing bars. Location: Centered on the front cab roof.	$2,783
5300-0144	Light bar Whelen Edge model 9M387NQ 72" with MKEZ7 mounts, pre-wire for Opticom and without rear facing strobes. N/A on INTL Chassis. Location: Centered on the front cab roof	$3,193
5300-0145	Federal ADX7204 LED Lightbar 72". Includes (12) Solaris 9-LED red reflectors and Opticom. Location: Centered on the front cab roof.	$5,796
5300-0148	Light bar Whelen model 9MMEDFFD 28 1/4" strobe with MK9 mounts (PR). Lense colors to be RRCR (front to rear). Location: [#LOC]	$2,711
5300-0151	Light bar Whelen Freedom model FN66VLED 66" with MKEZ7 mounts. All LED light bar. Location: Centered on the front cab roof	$3,763
5300-0154	Light bar Federal Signal JetStream 60" LED. Red Solaris reflectors and red domes with clear center and 3M 792 Opticom. NFPA Compliant, does not require 2 addl side facing bars. Location: Centered on the front cab roof	$6,729
5300-0155	Federal ADX5283 LED Lightbar 52" with clear domes. Includes (16) Solaris 6-LED red reflectors, (4) Solaris 6-LED white reflectors, TCL and Opticom. Includes (2) flashers, (1) for red LEDs and (1) for white LEDs.	$6,229
5300-0157	Whelen Mini-Freedom LED light bars (PR) model FNMINI 24" with clear lenses and MKEZ7 mounts. Location: [#LOC].	$4,364
5300-0158	Light bar Whelen Freedom model FN72QLED 72" LED with 3M Opticom, clear lenses and MKEZ7 mounts. N/A INTL Chassis. Location: Centered on the front cab roof.	$6,241
5300-0159	Light bar Federal Signal ADX7202 72" with (6) red, (2) white Solaris LED reflectors and 3M Opticom. Location: Centered on the front cab roof	$5,272
5300-0160	Light bar Federal Signal JetSolaris 60" LED. Red Solaris reflectors with center traffic clearing light. NFPA compliant, does not require 2 addl side facing bars. Location: Centered on the front cab roof.	$2,708
5300-0161	Light bar Whelen Freedom model FN72VLED 72" LED with Opticom and MKEZ7 mounts. Includes (10) red LED, (2) white LED and (2) green LED. N/A INTL Chassis. Location: Centered on the front cab roof.	$8,118
5300-0162	Whelen Mini-Freedom LED side facing light bars (PR) model FT8RARRF driver and FT8RRARF officer 24" with MKEZ7 mounts. Location: [#LOC]. Lense colors: Clear.	$4,181
5300-0163	Light bar Whelen Freedom model FN72VLED 72" LED with offset Opticom and MKEZ7 mounts. N/A INTL Chassis or Vista roofs with front facing windows. Location: Centered on the front cab roof.	$6,459
5300-0164	Light bar package, Federal Signal Escape LED (5) bar package. Includes: (1) 40" LED front bar (RRWRR), (2) diagonal 26" LED bars (RWR) and (2) 28" side LED bars (RRR).	$8,840
5300-0166	Light bar Whelen Freedom model FN60VLED 60" LED with MKEZ7 mounts. N/A on Vista roofs with front facing windows. Location: Centered on the front cab roof	$4,844
5300-0167	Whelen Mini-Freedom LED side facing light bars (PR) model FT8RRRRF 28.25" with MKEZ7 mounts. Location: [#LOC]. Lense colors: Clear.	$5,279
5300-0168	Whelen Mini-Freedom LED side facing light bars (PR) model FT8RRRRF 24" with MKEZ7 mounts. Location: [#LOC]. Lens colors: Red.	$4,181
5300-0169	Light bar Whelen Freedom model FN72QLED 72" LED with red lenses and MKEZ7 mounts. Includes (8) red LED and (2) white LED. N/A INTL Chassis. Location: Centered on the front cab roof.	$4,289
5300-0171	Light bar Federal Signal Aerodynic ADL5202 52" with driver red and officer blue lenses. Location: Centered on the front cab roof.	$1,440
5300-0173	Light bar Whelen Freedom model FN72VLED 72" LED with MK8 high mounts. Includes (12) red LED, (2) amber LED and (4) white LED. N/A INTL Chassis or Vista roofs with front facing windows. Location: Centered on the front cab roof.	$6,257
5300-0174	Light bar Whelen Freedom model FN82VLED 82" LED with MKEZ7 mounts and red lenses. Includes (1) driver forward facing steady burn to meet California law. N/A INTL Chassis or Vista roofs with front facing windows. Location: Centered on the front cab roof	$4,557
5300-0176	Light bar Whelen Freedom model FN72QLED 72" LED with MK8 high mounts. N/A INTL Chassis. Location: Centered on the front cab roof.	$3,859
5300-0179	Light bar Federal Signal JLX21 LED red/blue(PR). Locate blue forward if side facing. Location: [#LOC]	$2,381
5300-0184	Whelen Mini-Freedom LED side facing light bars (PR) model FT8RCCRF 28.25" with R/C/C/R lenses and MKEZ7 mounts. Location: [#LOC]	$4,149
5300-0185	Light bar Whelen Freedom model FN72QLED 72" LED with clear lenses, MKEZ7 mounts and pre-wire for 3M opticom. Includes (8) red LED and (2) white LED. N/A INTL Chassis. Location: Centered on the front cab roof	$4,366

5300-0187	Light bar Whelen Freedom model FN72QLED 72" LED with clear lenses and MKH8 high mounts. Includes (8) red LED and (2) white LED. N/A INTL Chassis. Location: Centered on the front cab roof	$4,332
5300-0188	Light bar Whelen Freedom model FN72VLED 72" LED with Opticom and MK8 high mounts. N/A INTL Chassis or Vista roofs with front facing windows. Location: Centered on the front cab roof.	$6,504
5300-0190	Light bar Whelen Freedom model FN72QLED 72" LED with Opticom and MK8 high mounts. Includes (6) red LED, (4) Blue LED and (2) white LED. N/A INTL Chassis. Location: Centered on the front cab roof.	$7,334
5300-0191	Install customer purchased E-ONE overstock lightbar. P/N: 681939. Includes disable of rear corner facing LED lights.	$330
5300-0192	Light bar Code 3 Model XP9588NFPA1 88" LED. All red with clear lenses. Not available on commercial cabs. Location: Centered on the front cab roof.	$4,779
5300-0193	Code3 model XP9501NFPA1 (PR) red LED with clear domes. Location: [#LOC].	$2,030
5300-0195	Light bar Federal Signal JetStream 60" LED. Red driver/Blue officer Solaris reflectors. Location: Centered on the front cab roof	$2,305
5300-0197	Light bar Whelen Freedom model FN72QLED 72" LED with GTT Opticom, red lenses and MKH8 high mounts. N/A INTL Chassis. Location: Centered on the front cab roof.	$6,290
5300-0198	Light bar Federal Signal ADX2215-SMV LED side facing (PR) with driver blue forward/red rearward and officer red forward/blue rearward facing lenses. Location: [#LOC].	$4,276
5300-0199	Light bar Whelen Freedom model FL2RRRR 72" LED with Opticom and MKEZ7 mounts. Includes (12) red LED. N/A INTL Chassis. Location: Centered on the front cab roof.	$7,294
5300-0200	Light bar Federal Signal AeroDynic ADX72RB 72" with (16) red and (16) blue Solaris LED reflectors. Lens and LED colors to be B/B/R/R/R/R/B/B/R/R/R/R/B/B. Location: Centered on the front cab roof.	$5,372
5300-0201	Light bar Federal Signal AeroDynic ADX22RB LED (PR) 22" with (4) red and (4) blue Solaris LED reflectors. Lens and LED colors to be B/R/R/B. Located side facing only. Not NFPA compliant forward facing. Location: [#LOC].	$3,265
5300-0202	Light bar Weldon Aero Maxx II 59" LED. NFPA Compliant, does not require 2 addl side facing bars. Location: Centered on the front cab roof	$2,995
5300-0203	Light bar Whelen Freedom model FN72QLED 72" LED with 3M 795H Opticom, (10) red LEDs, (2) clear LEDs and MK8 high mounts. For use with front vista windows. Location: Centered on the front cab roof.	$7,295
5300-0204	Federal ADX7262 LED Lightbar 72" with clear lenses. Includes (12) Solaris 6-LED red reflectors, (8) Solaris 6-LED blue reflectors, (4) Solaris 9-LED red reflectors, and a 3M Opticom. Includes (2) flashers, (1) for red LEDs and (1) for blue LEDs.	$5,829
5300-0205	Whelen Mini-Freedom LED side facing light bars (PR) model FT8CRRCF 28.25" with CRRC lenses and MKEZ7 mounts. Location: [#LOC].	$4,149
5300-0206	Light bar package, Whelen 4500 LED (5) bar package. Includes: (1) 40" LED front bar w/ Opticom, (2) diagonal 24" LED bars and (2) 28" side LED bars.	$12,936
5300-0207	Federal ADX7250 LED Lightbar 72". Includes (12) Solaris 6-LED red reflectors, (4) Solaris 9-LED red reflectors, and (10) Solaris 6-LED white reflectors and Opticom. Includes (2) flashers, (1) for red LEDs and (1) for white LEDs.	$7,243
5300-0209	Federal ADX7265 LED Lightbar 72". Includes (10) Solaris 6-LED red reflectors, (10) Solaris 6-LED blue reflectors, (4) Solaris 9-LED red reflectors, and a 3M Opticom. Includes (2) flashers, (1) for red LEDs and (1) for blue LEDs.	$5,829
5300-0211	Light bar Whelen Freedom model FN60QLED 60" LED with MKEZ7 mounts. Includes (8) red, (2) white and (2) amber modules. Location: Centered on the front cab roof	$4,936
5300-0212	Light bar Whelen Freedom model FN72VLED 72" LED with MKEZ7 mounts. Includes (10) red LED and (4) white LED. N/A INTL Chassis. Location: Centered on the front cab roof.	$5,019
5300-0213	Light bar Code 3 MX model 769NFPA1 with Opticom. Upper deck contains 5 rotators w/ red lenses. Lower deck contains 795H Opticom and intersection sweeps w/clear lenses. Location: Centered on the front cab roof.	$3,243
5300-0214	Light bar Whelen Freedom model FN72QLED 72" LED with GTT Opticom, clear lenses and MKH8 high mounts. N/A INTL Chassis. Location: Centered on the front cab roof	$6,290
5300-0215	Light bar Whelen Freedom model FL2RRRRF 72" LED with MK8H high mounts. Includes (10) red LEDs and (4) blue LEDs. N/A INTL Chassis. Location: Centered on the front cab roof.	$5,198
5300-0216	Light bar Whelen Freedom 72" LED with (8) red LEDs, (2) white LEDs, side facing LR11 alley lights, 3M Opticom, clear lenses and MKEZ7 mounts. N/A INTL Chassis. Location: Centered on the front cab roof	$6,564
5300-0217	Light bar Federal Signal AeroDynic ADX7205 72" with 12 red Solaris LED reflectors and 2 traffic clearing lts. Location: Centered on the front cab roof.	$3,534
5300-0219	Light bar Whelen Freedom model FL2RRRR 72" LED with MKEZ7 mounts and clear lenses. Includes (12) red LEDs, (2) clear LEDs and GTT Opticom. N/A INTL Chassis and vista cabs. Location: Centered on the front cab roof.	$6,422
5300-0220	Light bar Whelen Freedom 82" LED with MKEZ7 mounts and clear lenses. Includes (14) red LEDs and (2) LR11Takedown lights . N/A commercial Chassis. Location: Centered on the front cab roof	$5,443
5300-0232	Light bar Code 3 Excalibur model X69A. Upper deck contains (8) OPX-6 red LED modules and (1) LEDX modules in the center. Lower deck contains (10) OPX-6 red LED modules with a center mounted N-3 emitter. Lens color: Clear. Location: Centered on the front cab roof.	$5,702
5300-0233	Light bar Code 3 Excalibur 36". Upper contains (6) OPX-6 red LED modules. Lower contains (6) OPX-6 red LED modules. Lens color clear. Location: [#LOC].	$7,806

5300-0237	Light bar Whelen Freedom model FN66QLED 66" with 3M 9592 Opticom (switched on dash panel) and MKEZ7 mounts. All LED light bar without rear facing LEDs. Driver side red lights and officer side to be blue (standard white center) Location: Centered on the front cab roof.	$5,575
5300-0240	Whelen Justice model JE2NFPA 56" with MKEZ7 mounts. All LED (forward facing) light bar.	$634
5300-0243	Light bar Whelen Freedom model FN82QLED 82" LED with clear lenses, Opticom and MKEZ7 mounts. Includes (7) red LED and (7) blue LED. N/A INTL Chassis. Location: Centered on the front cab roof.	$6,322
5300-0244	Whelen Mini-Freedom LED side facing light bars (PR) model FT8RRRRF driver and FT8BBBBF officer 28.25" with MKEZ7 mounts. Location: [#LOC]. Lense colors: Clear.	$4,181
5300-0246	Whelen Mini-Freedom LED light bars (PR) model FT8RCRCF 28.25" with clear lenses and MKEZ7 mounts. Location: [#LOC].	$4,364
5300-0250	Light bar package, Whelen 4500 red/blue LED (5) bar package. Includes: (1) 40" LED front bar w/ Opticom, (2) diagonal 24" LED bars and (2) 28" side LED bars.	$12,936
5300-0251	Light bar Whelen Freedom model FN72QLED 72" LED with clear lenses, Opticom and MKEZ7 mounts. Includes (7) red LED, (3) blue LED and (2) white LED. N/A INTL Chassis. Location: Centered on the front cab roof.	$6,666
5300-0252	Light bar Whelen Freedom model FN72QLED 72" LED red/blue with MKEZ7 mounts and clear lenses. N/A INTL Chassis. Location: Centered on the front cab roof	$3,859
5300-0253	Whelen Mini-Freedom LED side facing light bars (PR) model FT8RRBBF driver and FT8BBRRF officer 28.25" with MKEZ7 mounts. Location: [#LOC]. Lense colors: Clear.	$4,181
5300-0255	Light bar Federal Signal JLX2133-CNFPA LED (PR) with clear lenses. Location: [#LOC].	$2,190
5300-0257	Light bar Whelen Freedom model FN72QLED 72" LED with MKEZ7 mounts. Includes (1) driver forward facing steady burn to meet California law. N/A INTL Chassis. Location: Centered on the front cab roof.	$3,859
5300-0260	Light bar Whelen Freedom 66" LED with 3M Opticom, red lenses and MKEZ7 mounts. Includes (10) red LED and (2) LR11 dual alley lights. Location: Centered on the front cab roof.	$6,091
5300-0261	Light bar Federal Signal Legend. (2) 24" light bars LED side facing only. Lenses color: clear. Location: [#LOC].	$3,517
5300-0263	Light bar Federal Signal Legend 61" LED with alley lights, clear lenses and red diodes. Location: Centered on the front cab roof	$3,138
5300-0264	Whelen Mini-Freedom LED side facing light bars (PR) model FT8RCRRF driver and FT8BCBBF officer 24" with MKEZ7 mounts. Location: each side over rear cab doors. Lense colors: Clear.	$4,149
5300-0265	Whelen Mini-Freedom LED side facing light bars (PR) model FT8RCRRF driver and FT8BCBBF officer 24" with MKEZ7 mounts. Location: front cab corners. Lense colors: Clear.	$4,149
5300-0267	Light bar Whelen Justice model JE2NFPA 56" LED with clear lenses and MKEZ7 mounts. N/A on Vista roofs with front facing windows. Includes (4) red corner facing LIN6 LED lights, (6) forward facing CON3 Linear LED lights; (4) red, (2) white. Location: Centered on the front cab roof.	$2,303
5300-0269	Light bar Whelen Freedom model FN60VLED 60" LED with clear lenses and MKEZ7 mounts. Includes (6) red, (2) white, (4) blue modules and GTT Opticom. Location: Centered on the front cab roof.	$5,899
5300-0270	Light bar Whelen model 45B38 38" LED with Opticom. Location: Centered front of cab below windshield	$2,820
5300-0271	Light bar Whelen Freedom model FN72QLED 72" LED red/blue with MK8 high mounts. N/A INTL Chassis. Location: Centered on the front cab roof	$3,909
5300-0277	Light bar Whelen Freedom model FN72VLED 72" LED with MK8 mounts. N/A INTL Chassis or Vista roofs with front facing windows. Location: Centered on the front cab roof.	$3,909
5300-0278	Light bar Whelen 4500 LED red/clear (PR) side facing. Includes: (2) 28" side LED bars. Location: [#LOC].	$4,849
5300-0279	Light bar Whelen 4500 LED red/clear (PR). Includes: (2) 24" LED bars. Location: [#LOC].	$4,632
5300-0284	Light bar Whelen Freedom model FN82VLED 82" LED with MKEZ7 mounts and clear lenses. Includes (12) red, (4) white LEDs. N/A commercial Chassis. Location: Centered on the front cab roof	$5,767
5300-0285	Whelen Mini-Freedom LED side facing light bars (PR) model FT8RRRRF 24" with MK8H high mounts. Location: [#LOC]. Lense colors: Red.	$4,377
5300-0286	Light bar Whelen Freedom model FN72QLED 72" LED with MK8 high mounts. Includes (14) red LED with red lenses. N/A INTL Chassis. Location: Centered on the front cab roof.	$5,424
5300-0287	Light bar Whelen Freedom model FN82VLED 82" LED with MKEZ7 mounts and clear lenses. Includes (14) red, (4) white LEDs. N/A commercial Chassis. Location: Centered on the front cab roof	$6,101
5300-0288	Light bar Federal Signal JetStream 60" LED. Red/Blue Solaris reflectors with clear domes. NFPA Compliant, does not require 2 addl side facing bars. Location: Centered on the front cab roof	$2,783
5300-0290	Whelen Mini-Freedom LED light bars (PR) model FT8 28.25" with clear lenses and MKEZ7 mounts. Includes: (4) corner mounted red LED, (2) split red/white forward facing LED flashing in X pattern and (1) end mounted red LED Location: [#LOC].	$5,327
5300-0291	Whelen Mini-Freedom LED light bars (PR) model FT8 28.25" with clear lenses and MK8H high mounts. Includes: (4)corner mounted red LED, (2) split red/white forward facing LED flashing in X pattern and (1) end mounted red LED Location: [#LOC].	$5,375
5300-0292	Light bar Whelen Freedom model FN72QLED 72" LED with MK8 high mounts. Includes (8) red LED, (2) split red/white and (4) white LED. N/A INTL Chassis. Location: Centered on the front cab roof.	$5,680
5300-0293	Light bar Federal Signal Legend 61" LED with clear lenses and red diodes. Location: Centered on the front cab roof	$3,786
5300-0294	Light bar Whelen Freedom model FN72QLED 72" LED with MK8H mounts. Centered on the front cab roof.	$3,807

5300-0295	Light bar Whelen Freedom model FN72QLED 72" LED with 3M Opticom, clear lenses and MKH8 mounts. N/A INTL Chassis. Location: Centered on the front cab roof.	$6,241
5300-0297	Light bar Whelen Freedom model FN66QLED 66" with MKEZ7 mounts. All LED light bar without rear facing LEDs. Driver side red LED, officer blue LED. Location: Centered on the front cab roof.	$3,763
5300-0298	Light bar Whelen Freedom model FN72QLED 72" LED with MKEZ7 mounts. Location: Centered on the front cab roof.	$3,859
5300-0299	Light bar Whelen 4500 Series 20" LED (model 45B20). Location: Centered front of cab below windshield.	$1,717
5300-0300	Light bar Whelen Freedom model FN72QLED 72" LED with 3M Opticom, clear lenses and MKEZ7 mounts. N/A INTL Chassis. Location: Centered on the front cab roof.	$6,241
5300-0301	Light bar Whelen Freedom model FN72QLED 72" LED with Opticom and MK8 high mounts. Includes (8) red LED and (4) white LED with red/clear lenses. N/A INTL Chassis. Location: Centered on the front cab roof.	$6,056
5300-0302	Light bar Federal Signal Split Vision VSLR8-NFPA1. Two (2) 26.5" 4-pod light bars w/ (3) red and (1) multi-color pods on each bar with red/clear lenses. Location: [#LOC].	$3,992
5300-0303	Light bar Whelen Freedom model FN66QLED 66" with MKEZ7 mounts. Includes (10) red LED with red lenses and (2) white LED with clear lenses. Location: Centered on the front cab roof.	$4,490
5300-0304	Light bar Whelen Freedom model FN72QLED 72" LED with MK8 high mounts. Includes (5) red LED, (5) blue and (4) white LED . N/A INTL Chassis. Location: Centered on the front cab roof.	$5,424
5300-0305	Light bar Whelen Freedom model FN55QLED 55" LED with driver red/officer blue LEDS, takedown lights and MKEZ7 mounts. Location: Centered on the front cab roof.	$3,694
5300-0306	Light bar Federal Signal JetSolaris 60" LED. Red and blue Solaris reflectors with center traffic clearing light. NFPA Compliant, does not require 2 addl side facing bars. Location: Centered on the front body, mounted to the roof with no upper body or mounted on a bracket in front of the body with 13" upper body.	$2,708
5300-0307	Light bar Whelen Freedom model FN72QLED 72" LED with clear lenses, Opticom and MKEZ7 mounts. Includes (10) red LED and (2) white LED. N/A INTL Chassis. Location: Centered on the front cab roof.	$6,666
5300-0310	Light bar Whelen Freedom model FN72VLED 72" LED with Opticom and MK8H high mounts. Includes (10) red LED, (2) white LED and (2) blue LED. N/A INTL Chassis. Location: Centered on the front cab roof.	$6,605
5300-0313	Light bar Federal Signal ADX2205 LED (PR) red/clear. State of Maryland only. Location: [#LOC].	$5,218
5300-0314	Light bar Federal Signal Legend. (2) 24" light bars LED. Lenses color: clear. (1) Model number LGD24Z-00019 and (1) model number LGD24Z-00020. Location: [#LOC].	$2,055
5300-0315	Whelen Mini-Freedom LED side facing light bars (PR) model FT8BRBRF driver and FT8RBRBF officer 28.25" with MKEZ7 mounts. Location: [#LOC]. Lense colors: Clear.	$4,181
5300-0317	Light bar Whelen Freedom model FN55QLED 55" with GTT 795H Opticom and MKEZ7 mounts. All LED light bar without rear facing LEDs. Location:[#LOC].	$4,874
5300-0318	Light bar risers (PR) for the light bars installed on the top of the cab to insure 360 degree visibility. The riser shall raise the as mounted light bar(s) approximately 4" to prevent interference with the brow lighting (if so equipped) and ensure 360 degree visibility is maintained.	$190
5300-0319	Light bar Whelen Freedom model FN60VLED 60" LED with MK8H mounts. N/A on Vista roofs with front facing windows. Location: Centered on the front cab roof	$4,907
5300-0322	Light bar made from (2) PowerArc model M90FK-RC light heads. Each light head houses (12) red LEDs (24 total) with clear lenses and a polished stainless steel flange. Includes oscillating technology. Both light heads when mounted together to make light bar are approximately 20" in length. Location: centered front of cab below windshield.	$1,643
5300-0325	Light bar Whelen Freedom model FN72VLED 72" LED with 795H Opticom, (12) red LEDs, (2) clear LEDs and MK8H mounts. N/A INTL Chassis or Vista roofs with front facing windows. Location: Centered on the front cab roof.	$7,946
5300-0326	Light bar Whelen Freedom model FN72QLED 72" LED with GTT Opticom, clear lenses and MK8H mounts. Includes (3) red LED, (3) blue LED and (2) white LED. N/A INTL Chassis. Location: Centered on the front cab roof.	$6,289
5300-0327	Light bar Whelen Freedom model FN82QLED 82" LED with MKEZ7 mounts and clear lenses. Includes (12) red, (2) white LEDs. N/A commercial Chassis. Location: Centered on the front cab roof	$4,769
5300-0328	Light bar Whelen Freedom model FN72QLED 72" LED with MK8 high mounts. Includes (8) red LED, (2) blue LED and (4) white LED. N/A INTL Chassis. Location: Centered on the front cab roof.	$5,424
5300-0329	Light bar Whelen Freedom model FN55QLED 55" LED with driver red/officer blue LEDS, takedown lights and MKEZ7 mounts. Location: Centered on the front cab roof.	$3,694
5300-0330	Light bar Whelen Freedom model FN72QLED 72" LED with clear lenses and MKE7 mounts. Includes (10) red LED and (4) white LED. N/A INTL Chassis. Location: Centered on the front cab roof.	$5,424
5300-0331	Light bar Federal Signal JetSolaris 60" LED. Clear/white Solaris reflectors with red domes. NFPA compliant. Does not require 2 addl side facing bars. Location: Centered on the front cab roof.	$2,628
5300-0333	Whelen Mini-Freedom LED side facing light bars (PR) model FT8RBRP 24" with MKEZ7 mounts. Location: [#LOC]. Lens color: Red/Blue.	$4,181
5300-0334	Light bar Whelen Freedom model FN72QLED 72" LED GTT Opticom and clear lenses, MKEZ7 mounts. Includes (8) red LED and (2) white LED. N/A INTL Chassis. Location: Centered on the front cab roof	$5,509
5300-0335	Federal ADX7204 LED lightbar 72". Includes (12) Solaris 9-LED red reflectors with clear lenses and Opticom. Location: Centered on the front cab roof.	$5,796

5300-0336	Federal ADX7204 LED lightbar 72". Includes (12) Solaris 9-LED red reflectors with lens arrangement of R/C/R/C/R/C/C/C/C/R/C/R/C/R and Opticom (with switch accessible to driver). Location: Centered on the front cab roof.	$5,796
5300-0337	Light bar Whelen Freedom model FN72QLED 72" LED with MK8H high mounts. Includes (8) red LED and (6) white LED. N/A INTL Chassis. Location: Centered on the front cab roof.	$5,088
5300-0339	Light bar Federal Signal JetSolaris 72" LED. Red and White Solaris reflectors with clear domes. NFPA compliant. Does not require 2 addl side facing bars. Location: Centered on the front cab roof.	$2,499
5300-0343	Light bar Whelen Freedom model FN72QLED 72" LED with clear lenses, MKEZ7 mounts and pre-wire for 3M opticom. Includes (3) red LED, (3) blue LED and (2) white LED. N/A INTL Chassis. Location: Centered on the front cab roof	$3,688
5300-0344	Light bar Whelen Justice model JE0NFPA 62" LED with clear lenses and MKEZ7 mounts. N/A on Vista roofs with front facing windows. Includes (4) red corner facing LIN6 LED lights, (6) forward facing CON3 Linear LED lights; (4) red, (2) white. Location: Centered on the front cab roof.	$2,420
5300-0345	Light bar Federal Signal Legend 70" LED with clear lenses and red diodes. Location: Centered on the front cab roof.	$3,385
5300-0346	Whelen Mini-Freedom LED light bars (PR) model FNMINI 24" with clear lenses and MKEZ7 mounts. Includes red/clear/blue driver and blue/clear/red officer. Location: [#LOC].	$4,364
5300-0349	Light bar Whelen Freedom model FN72QLED 72" LED with clear lenses, Opticom and MK8H high mounts. Includes (8) red LED, (2) blue LED, (2) white, (2) LR11 takedown and 795H Opticom. N/A INTL Chassis. Location: Centered on the front cab roof.	$6,558
5300-0350	Whelen Mini-Freedom LED side facing light bars (PR) model FT8RBRRF 28.25" with clear lenses and MK8H mounts. Location: [#LOC].	$4,197
5300-0351	Light bar Whelen Freedom model FN66QLED 66" LED with MK8 high mounts. Includes (13) red LED, (7) blue and (2) white takedown LEDs. Location: centered on the front cab roof.	$6,596
5300-0352	Whelen Mini-Freedom LED light bars (PR) red/blue 24" with clear lenses and MKEZ7 mounts. Location: [#LOC].	$4,364
5300-0354	Light bar Federal Signal Split Vision VSLR6. Two (2) 21" 3-pod light bars w/ (3) red pods on each bar with red lenses. Location: [#LOC].	$3,376
5300-0355	Light bar Federal Signal Split Vision VSLR6. Two (2) 21" 3-pod light bars w/ (2) red pods and (1) multi-color pod on each bar with red/clear lenses. Location: [#LOC].	$3,376
5300-0356	Light bar Federal Signal Split Vision VSLR8-NFPA1. Two (2) 26.5" 4-pod light bars w/(3) red and (1) multi-color pods on each bar with red/clear lenses configured for use w/vista roof that has front windows. Location: [#LOC].	$3,992
5300-0357	Light bar Federal Signal Vision VSLR60S-NFPA1. Includes (7) LED pods; (5) red, (2) multi-color. Location: center cab roof.	$3,774
5300-0358	Light bars Federal Signal Vision VSLR. One (1) center 21" 3 pod and two (2) side 26.5" 4 pod LED light bars. Lenses to be R/R/C/R R/C/R R/C/R/R. Location: "V" centered on the front cab roof. If equipped with front vista windows, rear LED to be shut off.	$5,222
5300-0359	Light bar Federal Signal Split Vision VSLR6. Two (2) 21" 3-pod light bars w/ (3) blue pods on each bar with blue lenses. Location: [#LOC].	$3,376
5300-0360	Light bar Federal Signal Split Vision VSLR6. Two (2) 21" 3-pod light bars w/ (2) red pods and (1) multi-color pod on each bar with R/C/R lenses. Pods 2 and 5 to have rear rotators programmed amber to rear, white side and forward. Location: [#LOC].	$3,694
5300-0361	Light bar Federal Signal Split Vision VSLR6. Two (2) 21" 3-pod light bars w/ (2) blue pods and (1) multi-color pod on each bar with B/C/B lenses. Pods 2 and 5 to have rear rotators programmed amber to rear, white side and forward. Location: [#LOC].	$3,694
5300-0362	Light bars Power Arc model VM2502GLP-1P LED (PR). Colors to be RBR RBR. Includes Golight on each bar. Location: [#LOC].	$4,959
5300-0363	Whelen Mini-Freedom LED side facing light bars (PR) model FT8RCCRF 28.25" with R/C/C/R lenses and MK8H mounts. Location: [#LOC].	$4,197
5300-0365	Light bars Federal Signal Vision VSLR. One (1) center 21" 3 pod and two (2) side 26.5" 4 pod LED light bars. Lenses to be R/C/R/R C/R/C R/R/C/R. Location: "V" centered on the front cab roof. If equipped with front vista windows, rear LED to be shut off.	$5,222
5300-0366	Light bars Federal Signal Vision VSLR. One (1) center 21" 3 pod and two (2) side 26.5" 4 pod LED light bars. Lenses to be R/R/C/R R/R/R R/C/R/R. Location: "V" centered on the front cab roof. If equipped with front vista windows, rear LED to be shut off.	$5,222
5300-0367	Light bar Whelen Freedom model FN66QLED 66" with MKEZ7 mounts. (10) red and (2) white LED light bar without rear facing LEDs. Location: Centered on the front body, mounted to the roof with no upper body or mounted on a bracket in front of the body with 13" upper body.	$4,565
5300-0368	Light bar Federal Signal JetSolaris 60" LED. Red and blue Solaris reflectors reflectors with center traffic clearing light. NFPA compliant, does not require 2 addl side facing bars. Location: Centered on the front cab roof.	$2,708
5300-0369	Light bar Whelen Freedom model FN72QLED 72" LED with MK8H high mounts and red/clear lenses. Includes (12) red LED and (2) white LED. N/A INTL Chassis. Location: Centered on the front cab roof.	$5,419
5300-0370	Light bar Federal Signal Split Vision VSLR8S-CFD2. Two (2) 26.5" 4-pod light bars w/driver side (3) red and (1) multi-color pods, officer side (2) red, (1) green and (1) multi-color pods with red/green/clear lenses. Location: [#LOC].	$4,113
5300-0371	Light bar Federal Signal Split Vision VSLR8S-CHI. Two (2) 26.5" 4-pod light bars w/driver side (3) red and (1) multi-color pods, officer side (2) red, (1) green and (1) multi-color pods with red and clear lenses. Location: [#LOC].	$4,113
5300-0372	Light bar Whelen Freedom 72" LED with 3M Opticom and MKEZ7 mounts. Includes (12) red LED and clear lenses. N/A INTL Chassis. Location: Centered on the front cab roof.	$6,320

5300-0373	Light bar Code 3 model 2758NFPA1CC LED red with clear lenses. Location: Centered on the front cab roof.	$3,081
5300-0374	Light bar Code 3 LED model 2722NFPA1 (PR) 22" Long. All red with clear lens. Location:[#LOC].	$3,609
5300-0375	Light bar Federal Signal Split Vision VSLR8-NFPA4. Two (2) 26.5" 4-pod light bars w/ (2) red and (2) multi-color pods on each bar with clear lenses. Location: [#LOC].	$4,988
5300-0376	Light bar Federal Signal Split Vision VSLR6-NFPA1. Two (2) 21" 3-pod light bars w/ (2) red and (1) multi-color pods on each bar with clear lenses. Location: [#LOC].	$3,751
5300-0379	Light bar Whelen Freedom model FN72VLED 72" LED with MKEZ7 mounts. Includes (12) red LED and (2) white LED. N/A INTL Chassis. Location: Centered on the front cab roof. Reference 660636.	$5,019
5300-0380	Light bar Federal Signal JetSolaris 60" LED. Blue Solaris reflectors with clear domes. NFPA compliant. Does not require 2 addl side facing bars. Location: Centered on the front cab roof.	$2,628
5300-0381	Light bar Federal Signal ADX2205 LED with clear lenses(PR). Location: [#LOC]	$5,218
5300-0382	Light bar Federal Signal Split Vision VSLR8S-CFD2. Two (2) 26.5" 4-pod light bars w/ (3) red with red domes and (1) multi-color pod with clear dome on driver and (2) red with red domes, (1) multi-color with clear dome and (1) green with clear dome. Location: [#LOC].	$4,367
5300-0383	Light bar Federal Signal JetStream JLX54HH-00011 with all lenses clear 54" LED. Red Solaris reflectors each side and (2) center TCL lights. Location: Centered on the front cab roof.	$2,765
5300-0384	Light bar Code 3 model XL5000 74" with R/R/R/B lenses. Location: Centered on the front cab roof.	$1,935
5300-0385	Light bar Whelen Freedom model FN72QLED 72" LED with MKEZ7 mounts. Includes (8) red LED, (2) white LED and (2) dual LR11 LED take down lights. N/A INTL Chassis. Location: Centered on the front vista cab roof.	$4,749
5300-0386	Light bar Code 3 model 21TR 69". Includes: (4) corner mounted red TRS6 LED modules, (2) side facing red TRS3 LED modules and (7) forward facing red LED modules R/R/W/R/W/R/R w/clear lenses. Location: Centered on the front cab roof.	$2,299
5300-0387	Whelen Mini-Freedom LED light bars (PR) model FT8RRRRF 28.25" with MK8H high mounts. Location: [#LOC]. Lense colors: Clear.	$4,197
5300-0388	Light bar Whelen Freedom model FN72QLED 72" LED with clear lenses and MKEZ7 mounts. Includes (8) red LED and (4) white LED. N/A INTL Chassis. Location: Centered on the front cab roof.	$4,607
5300-0389	Light bar Whelen Freedom model FN66QLED 66" with MK8H high mounts. All LED light bar without rear facing LEDs. Location: Centered on the front cab roof.	$3,809
5300-0390	Light bar Whelen Freedom model FN72QLED 72" LED with MK8 high mounts. Includes (8) red LED, (2) blue LED and (2) white LED. N/A INTL Chassis. Location: Centered on the front cab roof.	$4,399
5300-0391	Light bar Federal Signal Split Vision VSLR8. Two (2) 26.5" 4-pod light bars. Driver w/ (2) red and (2) multi-color pods with clear lenses; officer w/ (3) red and (1) multi-color pods with clear lenses. Location: [#LOC].	$4,988
5300-0393	Light bar Whelen Freedom model FN72VLED 72" LED with MKEZ7 mounts. Includes (10) red LED and (2) white LED. N/A INTL Chassis. Location: Centered on the front cab roof.	$4,475
5300-0394	Light bar Whelen Freedom model FN88QLED 88" LED with MKEZ7 mounts and clear lenses. Includes (12) red and (4) white LEDs. N/A commercial Chassis. Location: Centered on the front cab roof	$5,945
5300-0395	Whelen Mini-Freedom Rota-Beam LED light bars (PR) 24" with clear lenses and MKEZ7 mounts. Location: [#LOC].	$5,662
5300-0396	Light bar Whelen Freedom 72" LED with MK8 high mounts and clear lenses. Includes (5) red Rota-Beam LED, (4) red LED and (4) white LED. N/A INTL Chassis. Location: Centered on the front cab roof.	$5,956
5300-0397	Light bar Whelen Freedom model FN72QLED 72" LED with MKEZ7 mounts. Includes (10) red LED and (2) white LED. N/A INTL Chassis. Location: Centered on the front cab roof.	$4,662
5300-0399	Light bar Whelen Freedom model FN72QLED 72" LED with GTT Opticom, clear lenses and MKEZ7 mounts. Includes (6) red LED, (2) blue LED and (2) white LED. N/A INTL Chassis. Location: Centered on the front cab roof.	$6,376
5300-0400	Light bar Whelen Freedom model FN72QLED 72" LED with GTT Opticom, red lenses and MKEZ7 mounts. N/A INTL Chassis. Location: Centered on the front cab roof.	$6,241
5300-0401	Light bar Whelen Freedom 72" LED with MKEZ7 mounts and clear lenses. Includes (6) Rota-Beam LED (4-red, 2-white), (2) green LED, (2) red LED, (2) dual LR11 alley lights, (2) LR11 take down lights and GTT 795H Opticom. N/A INTL Chassis. Location: Centered on the front cab roof.	$6,857
5300-0403	Whelen Mini-Freedom Rota-Beam LED light bars (PR) 28.25" with R/C/R lenses, (2) red and (1) white Rota-Beam LED lights and MK8H high mounts. Location: [#LOC].	$5,449
5300-0404	Light bar Whelen Freedom 72" LED with MK8 high mounts and red / clear lenses. Includes (6) red Rota-Beam LED, (1) white Rota-Beam LED and (4) red LED. N/A INTL Chassis. Location: Centered on the front cab roof.	$5,546
5300-0405	Whelen Mini-Freedom LED light bar package with MKEZ7 mounts. (1) model FT8RCCRF centered on front cab roof, (1) FT8RRRRF each side front cab corner at 30 degree angle. Lense colors: Clear.	$5,385
5300-0406	Light bar Whelen Freedom 72" LED with MK8H high mounts and clear lenses. Includes (6) red Rota-Beam LED, (1) white Rota-Beam LED, (2) red LED and (2) white LED. N/A INTL Chassis. Location: Centered on the front cab roof.	$5,779
5300-0407	Light bar Whelen Freedom 60" LED with MK8 high mounts and clear lenses. Includes (6) red Rota-Beam LED, (1) white Rota-Beam LED and (2) white LED. N/A INTL Chassis. Location: Centered on the front cab roof.	$5,308
5300-0408	Light bar Federal Signal Legend 53" LED with clear lenses and red diodes. Location: Centered on the front cab roof	$3,047

5300-0409	Light bar Whelen Freedom model FN55QLED 55" LED with MKEZ7 mounts. Location: Centered on the front cab roof.	$3,200
5300-0410	Light bar Federal Signal JetSolaris 60" LED. Red Solaris reflectors with red domes. NFPA compliant. Does not require 2 addl side facing bars. Location: Centered on the front cab roof.	$2,628
5300-0411	Light bar Whelen Freedom model FN82QLED 82" LED with clear lenses, Opticom and MKEZ7 mounts. Includes (12) red LED and (2) white LED. N/A INTL Chassis. Location: Centered on the front cab roof.	$6,322
5300-0412	Light bar Federal Signal Legend 70" LED with red/white diodes and clear lenses. Location: Centered on the front cab roof.	$4,005
5300-0413	Light bar Federal Signal Navigator model NVG73-EONE 73" with (6) red and (2) white Quadraflare LED lights. Location: Centered on the front cab roof.	$3,257
5300-0414	Light bar Federal Signal Legend. (2) 24" light bars LED. Lenses color: clear. (1) Model number LGD24Z-2655171 and (1) model number LGD24Z-2655292. Location: [#LOC].	$2,055
5300-0415	Light bar Federal Signal Navigator model NVG73-NFPA3 73" with (2) red SLR rotators, (2) red / white SLR rotators and (4) red Quadraflare LED lights. Location: Centered on the front cab roof.	$3,632
5300-0416	Whelen Mini-Freedom Rota-Beam LED light bars (PR) 24" with clear lenses and MK8H high mounts. Location: [#LOC].	$5,714
5300-0417	Light bar Whelen Freedom 72" LED with MKEZ7 mounts and clear lenses. Includes (5) red Rota-Beam LED and (2) white Rota-Beam LED. N/A INTL Chassis. Location: Centered on the front cab roof.	$4,788
5300-0418	Whelen Ultra Freedom Micro Edge LED (PR) model MCFLED25 clear lens with red LEDs. Location [#LOC]. When used at front cab corners requires additional lighting to meet NFPA.	$1,919
5300-0419	Whelen Mini-Freedom LED light bars (PR) model FNMINI 24" with clear lenses and low profile MK9 mounts. Location: [#LOC].	$4,364
5300-0421	Light bar Whelen Freedom 72" LED with MKEZ7 mounts and clear lenses. Includes (8) red Rota-Beam LED and GTT 795H Opticom. N/A INTL Chassis. Location: Centered on the front cab roof.	$6,460
5300-0422	Light bar Whelen Freedom model FN72VLED 72" LED with 795H Opticom and MKEZ7 mounts. Includes (6) red LED, (4) blue LED and (2) white LED. N/A INTL Chassis. Location: Centered on the front cab roof.	$7,321
5300-0423	Light bar Whelen Freedom model FN66VLED 66" with dual LR11 alley lights, dual LR11 takedown lights and MKEZ7 mounts. All LED light bar. Location: Centered on the front cab roof	$4,119
5300-0424	Light bar Whelen Freedom 72" LED with MKEZ7 mounts and red/clear lenses. Includes (8) red Rota-Beam LED and GTT 795H Opticom. N/A INTL Chassis. Location: Centered on the front cab roof.	$6,460
5300-0427	Light bar Whelen Freedom model FN55VLED 55" LED with PE215 emitter, (4) red driver LED, (4) blue officer LED and MKEZ7 mounts and clear lenses. N/A with Vista roofs with front facing windows. Location: Centered on the front cab roof.	$4,094
5300-0428	Light bar Whelen Freedom model FN66QLED 66" with MKEZ7 mounts. Red/blue/clear LED light bar without rear facing LEDs. Location: Centered on the front cab roof.	$3,763
5300-0429	Light bar Whelen Freedom model FN72QLED 72" LED red/blue with MKEZ7 mounts and red/clear/blue lenses. N/A INTL Chassis. Location: Centered on the front cab roof	$3,859
5300-0430	Light bar Power Arc model LED VM6004-3P 60" long. Lenses color: R/R/R/W/R/R/R Location: center front cab roof.	$3,415
5300-0431	Light bar Federal Signal Navigator model NVG25-NFPA3 LED (PR). Includes (3) QL64 red and (2) QL73 red in each bar with clear lenses. Location: [#LOC]	$3,377
5300-0432	Light bar Federal Signal Navigator model NVG25-NFPA4 LED (PR). Includes (3) QL64 red and (2) QL73 red in each bar with red lenses. Location: [#LOC]	$3,377
5300-0433	Light bar Federal Signal Navigator model NVG25-0001 (PR). Includes (2) SLR rotators red/white and (1) QL64 red in each bar with clear lenses. Location: [#LOC]	$3,318
5300-0435	Light bar Federal Signal LPX61DS-NFPA 61" LED with red and clear lenses. Location: Centered on the front cab roof	$1,975
5300-0436	Light bar Federal Signal LPX70DS-NFPA1 70" LED with red and clear lenses. Location: Centered on the front cab roof	$2,122
5300-0437	Light bar Federal Signal Navigator model NVG60-NFPA4 60" with (10) red Quadraflare LED lights. Location: Centered on the front cab roof.	$3,255
5300-0438	Light bar Federal Signal Navigator model NVG73-NFPA4 73" with (12) red Quadraflare LED lights. Location: Centered on the front cab roof.	$3,762
5300-0440	Light bar Federal Signal Navigator model NVG60-NFPA1 60" with (2) red SLR rotators, (1) red / white SLR rotators and (2) red Quadraflare LED lights. Location: Centered on the front cab roof.	$2,656
5300-0441	Light bar Whelen Freedom model FN88VLED 88" LED with MKEZ7 mounts and clear lenses. Includes (10) red, (6) white LEDs and (2) dual LR11 alley lights. N/A commercial Chassis. Location: Centered on the front cab roof	$6,200
5300-0442	Light bar Whelen Freedom model FN72VLED 72" LED with 795H Opticom and MKEZ7 mounts. Includes (8) red LED and (4) blue LED. N/A INTL Chassis. Location: Centered on the front cab roof.	$7,321
5300-0443	Light bar Federal Signal Navigator model NVG25-NFPA-D & -P LED (PR). Includes (2) QL64 red, (1) QL64 split red/white and (1) QL73 red in each bar with clear lenses. Location: [#LOC]	$3,377
5300-0444	Light bar Federal Signal Navigator model NVG73-FLNDRS 73" with (2) red SLR rotators, (2) red/white SLR rotators, (2) red/white Quadraflare LED and (2) blue Quadraflare LED lights. Location: Centered on the front cab roof.	$4,134
5300-0445	Federal JLX7250-NFPA LED Light bar 72". Includes (8) red 6-LED reflectors, (3) white 6-LED reflectors, and (6) red 3-LED reflectors. The lenses shall be clear. No rear lighting.	$4,300
5300-0447	Light bar Federal Signal LPX 53" LED with red/clear/blue lenses, red diodes outer driver, clear diodes center and blue diodes outer officer. Location: Centered on the front cab roof	$1,847

5300-0448	Light bar Whelen Freedom model FN72VLED 72" LED with MK8H high mounts. Includes (11) red LED, (2) white LED and (1) green LED. N/A INTL Chassis. Location: Centered on the front cab roof.	$4,852
5300-0449	Light bar Whelen Freedom model FN72QLED 72" LED with 3M Opticom, clear lenses, (4) red LEDs', (2) blue LEDs', (2) clear LEDs' and MKEZ7 mounts. N/A INTL Chassis. Location: Centered on the front cab roof.	$6,241
5300-0450	Light bar Whelen Freedom model FN72VLED 72" LED with Opticom and MKEZ7 mounts. Includes (6) red LED, (6) blue LED and (2) white LED. N/A INTL Chassis. Location: Centered on the front cab roof.	$6,605
5310-0000	Light bar Federal Signal, Signal Master SML6. Location: installed at the rear of the apparatus.	$870
5310-0001	Light bar Federal Signal Signal Master SML8.	$957
5310-0002	Light bar Federal Signal Signal Master SMLED6.	$1,484
5310-0003	Light bar Federal Signal Signal Master SMLED8.	$1,568
5310-0005	Whelen Traffic Advisor Model TA837A - 43.25" long.	$1,083
5310-0006	Whelen Traffic Advisor Model TA870A - 62" long.	$1,697
5310-0010	Light bar Federal Signal Signal Master SML430, 19.5" long (PR). Mounted each side rear of body.	$1,006
5310-0011	Light bar CODE 3 model AS10S Arrowstik, 47" long. Mounted center rear body.	$1,252
5310-0012	Diamond plate shield over rear directional light.	$311
5310-0014	Light bar CODE 3 model AS839 Arrowstik, 39" long. Lenses to be amber with red on the ends. Mounted center rear body.	$1,023
5310-0015	Light bar CODE 3 model NASL839 LEDX Narrowstik, 40.5" long. Lights heads are amber with red on the ends. Mounted center rear body.	$1,822
5310-0017	Whelen Traffic Advisor model TAL65 LED - 36" long.	$1,342
5310-0018	Whelen Traffic Advisor Model TAM65 LED - 36" long.	$1,735
5310-0019	Light bar Code 3 model NASL847 LED Narrowstik, 47" long. Mounted on rear of body.	$1,819
5310-0021	Light bar CODE 3 model NASL839 LEDX Narrowstik, 40.5 inches long. Mounted center rear body.	$1,822
5310-0023	Light bar CODE 3 model NASL630 LEDX Narrowstik, 30.5 inches long.	$1,634
5310-0024	Whelen Traffic Advisor Model TA870L LED- 56" long.	$2,575
5310-0025	Directional light circuit wiring through upper level warning.	$76
5310-0026	Remote controlled message board. Located on top of vista roof. Includes control centrally located on cab engine cover. Board has a max 24 character set-up. Message board to face to rear of unit in the raised position	$27,906
5310-0027	Whelen Traffic Advisor Model TAM85 LED - 47" long.	$2,428
5310-0028	Whelen Traffic Advisor Model TAM83 LED - 31" long.	$1,778
5310-0029	Smooth plate shield painted job color over rear directional light.	$538
5310-0030	Whelen Traffic Advisor Model TA870L LED- 62" long.	$3,481
5310-0031	Whelen Traffic Advisor model TA-4437M LED, split (2) 22.75" long. Locate one each side on rear panel of body.	$2,033
5310-0034	Whelen Traffic Advisor Model TA870L SPL 48" long (PR) with (6) 700 series Super LED amber modules. Location: (1) each side facing on forward compartment tops. Control located officers side of center overhead.	$5,580
5310-0035	Whelen Traffic Advisor Model TAL85 LED - 47" long.	$1,690
5310-0042	Whelen Traffic Advisor Model TAZ86 LED - 31" long.	$2,233
5310-0043	Whelen Traffic Advisor Model TANF65 LED - 34" long.	$1,708
5310-0044	Light bar Federal Signal Signal Master Viper EXT LED 42" with 8 lights.	$1,777
5310-0045	Light bar Federal Signal Signal Master Viper EXT LED 31" with 6 lights.	$1,569
5310-0046	Whelen Traffic Advisor Model TANF85 LED - 45" long.	$2,109
5310-0051	Whelen Traffic Advisor Model TA870L - 72" long LED. Includes TACTLD1 controller.	$1,818
5310-0053	Whelen Traffic Advisor model TA-4437M LED, split (2) 22.75" long. Locate one each side on rear upper body extrusion above B2 and B3.	$2,033
5310-0054	Light bar Federal Signal Signal Master Plus SMLED-PLS-6.	$1,324
5310-0055	Light bar Federal Signal Master Viper EXT LED 31" with 6 lights with clear lenses.	$1,569
5310-0056	Whelen Traffic Advisor model TAL65 LED - 36" long. Locate surface mounted on driver and officer side of body up high approx. centered.	$1,342
5310-0057	Whelen traffic advisor. Includes (8) IONSV3AC amber individual lights on 12" centers and control head. Location: side facing, driver and officer side of body.	$3,224
5310-0058	Whelen Traffic Advisor Model TADP8 LED - 30" long. Includes TADCTL1 controller.	$2,121
5310-0059	Whelen Traffic Advisor Model TAD8 LED - 30" long. Includes TACTLD1 controller.	$1,794
5350-0000	Camera backup Intec with monochrome monitor.	$4,485
5350-0001	Camera back-up Safety Vision LCD model SV-CLCD70BA-625B with audio. For use with up to 2 cameras.	$2,024
5350-0025	Back up camera for Vehicle Information Control Center. Video displays automatically when transmission is in reverse.	$682
5350-0026	Side facing camera mtd up high on officer side of the cab centrally located (above canopy window if applicable) interlocked with right turn signal. Displays video on vehicle information control center.	$682
5350-0027	Side facing camera mtd up high on driver side of the cab centrally located (above canopy window if applicable) interlocked with left turn signal. Displays video on vehicle information control center.	$682
5350-0028	Forward facing camera mounted (approximately) center of cab.	$682
5350-0048	Setcom intercom system with (6) cab jacks and (1) pump panel jack. Custom cabs only. Headsets to be shipped loose.	$8,871
5350-0054	Safety Vision officer's side camera. Requires Safety Vision back-up camera option. SV-620 Kit w/ SV-523. Camera to be located on officer's side mirror.	$885

5350-0060	Diamond plate camera shield.	$208
5350-0061	Safety Vision driver's side camera. Requires Safety Vision back-up camera option. SV-620 Kit w/ SV-523. Camera to be located on driver's side mirror.	$885
5350-0070	Voyager back-up camera. Video displays automatically when transmission is in reverse. Camera only - does not include monitor.	$689
5350-0071	Voyager side mtd rear facing camera positioned up high on officer side of the cab centrally located (above canopy window if applicable) interlocked with right turn signal. Camera only - does not include monitor.	$670
5350-0072	Voyager side mtd rear facing camera positioned up high on driver side of the cab centrally located (above canopy window if applicable) interlocked with left turn signal. Camera only - does not include monitor.	$670
5350-0073	Voyager forward facing camera mounted upper center area of cab.	$630
5350-0074	Sigtronics US-45S intercom system with (4) cab jacks, (1) pump panel jack, four headsets / hooks, PTT switches for driver / ppnl. Does not include radio interface cable. Custom cabs only. Headsets to be shipped loose.	$4,226
5350-0076	David Clark model 3800 intercom system with (5) cab head sets. Headsets to be shipped loose.	$6,937
5350-0078	Smooth plate camera shield painted job color (match the "two tone" sale code color, if two tone applies).	$321
5350-0079	Sigtronics US-45D intercom system with (3) cab jacks, (1) pump panel jack, three headsets / hooks, PTT switches for driver/officer/ppnl. Does not include radio interface cable. Custom cabs only. Headsets to be shipped loose.	$3,989
5350-0080	Camera back-up Safety Vision LCD model SV-CLCD70A-625B with split screen capable monitor and audio. For use with up to 4 cameras.	$2,373
5350-0081	Backup Camera to be located in recess direction lightbar box offset to officer side.	$208
5350-0083	See instructions on file with sales for locations of headset plug-ins.	$97
5350-0084	David Clark model 3800 intercom system with (6) cab head sets. Headsets to be shipped loose.	$7,845
5350-0085	Safety Vision officer's side camera SV-622RS w/ SV-512 cable. Requires Safety Vision back-up camera option. Camera to be located up high on officer side of the cab centrally located (above canopy window if applicable) interlocked with right turn signal. Camera only - does not include monitor.	$917
5350-0086	Safety Vision driver's side camera SV-622LS w/ SV-512 cable. Requires Safety Vision back-up camera option. Camera to be located up high on driver side of the cab centrally located (above canopy window if applicable) interlocked with left turn signal. Camera only - does not include monitor.	$917
5350-0109	Safety Vision DVR with SV-620A camera on front of cab roof offset to driver side of center marker light. Quest cab only. No monitor.	$2,710
5350-0110	Camera backup Zone Defense LCD model SYS-323-1-4Q with split screen capable monitor.	$1,953
5350-0111	Camera backup Zone Defense LCD model SYS-323-1-4.	$1,316
5350-0112	Sigtronics US-67S intercom system with (6) cab jacks, six headsets / hooks, PTT switches for driver / officer. Does not include radio interface cable. Custom cabs only. Headsets to be shipped loose.	$5,514
5350-0114	Sigtronics US-67D intercom system with (6) cab jacks, six headsets / hooks, PTT switches for driver / officer. Does not include radio interface cable. Custom cabs only. Headsets to be shipped loose.	$5,621
5350-0116	Federal Signal back-up/DVR camera system. Includes front view, rear view camera, side view cameras, split screen monitor and DVR.	$3,888
5350-0118	Camera backup Federal Signal LCD model CAMSET70-NTSC-4.	$1,184
5350-0119	A Voyager three camera back-up system shall be provided. It shall include a 5.6 inch LCD monitor model # AOM562HD in the cab. Display shall be located on drivers side of the center dash pedestal mounted. Locate (1) camera model # VCCS150B on the rear of the body on B1 header. The rear camera shall be positioned to provide the best possible view of the rear and rear side of the body during back-up operations. (1) Side facing camera mounted up high on driver side of the cab on front cab corner model # VCMS36LCM and (1) Side facing camera mounted up high on officer side of the cab located on front cab corner model # VCMS36RCM.	$1,764
5350-0121	Install supplied ICA110-05 Radio as required by Customer. Antenna installed at manufacturers discretion. Programming to be done by Customer. Wire to Master switch to toggle radio on and off with master power.	$875
5350-0123	Sigtronics US-12S intercom system with (7) cab jacks, (1) pump panel jack, seven headsets / hooks, PTT switches for driver / officer / ppnl. Does not include radio interface cable. Custom cabs only. Headsets to be shipped loose.	$6,325
5350-0126	Custom radio installation quote for West Metro, Mn. See file for details.	$12,193
5350-0127	Flashback 2 digital video system. System includes (2) forward facing cameras and color monitor.	$13,346
5350-0130	David Clark model 3800 intercom system with (6) cab head sets and (1) pump panel jack. Custom cabs only. Headsets to be shipped loose.	$9,836
5350-0132	David Clark model 3800 intercom system with four (4) cab head sets and one (1) pump panel jack. Radio interfaced to three (3) positions, driver , turret operator and pump panel. Headsets to be shipped loose.	$10,186
5350-0134	Voyager back-up camera wire through multiplex display. Video displays automatically when transmission is in reverse.	$689
5350-0136	Sigtronics US-67D intercom system with (5) cab jacks, (1) pump panel jack, (1) driver rear body jack, five headsets / hooks, PTT switches for driver / officer / ppnl / rear body. Does not include radio interface cable. Custom cabs only. Headsets to be shipped loose.	$5,234

5350-0137	Sigtronics US-45S intercom system with (4) cab jacks, four headsets / hooks, PTT switches for driver / officer. Does not include radio interface cable. Custom cabs only. Headsets to be shipped loose.	$4,113
5350-0140	Safety Vision officer's side camera SV-622RS w/ SV-512 cable. Requires Safety Vision back-up camera option. Camera to be located on officer's side gravel shield offset to the rear.	$885
5350-0141	Safety Vision driver's side camera SV-622LS w/ SV-512 cable. Requires Safety Vision back-up camera option. Camera to be located on driver's side gravel shield offset to the rear.	$885
5350-0142	Safety Vision officer's side camera. Requires Safety Vision back-up camera option. SV-620 Kit w/ SV-523. Camera to be located on officer's side of cab above tank level lights.	$885
5350-0144	Safety Vision officer's side camera. Requires Safety Vision back-up camera option. SV-620 Kit w/ SV-523. Camera to be located on officer's side of cab above scene light.	$885
5350-0158	Camera back-up Safety Vision LCD model SV-CLCD70B-625B with audio. Located in cab dash on bracket (see photos).	$2,024
5350-0169	Camera back-up Safety Vision LCD model SV-CLCD-64-810 with lens shutter that opens when the unit is put in reverse.	$2,093
5350-0173	Safety Vision driver's side camera SV-622LS w/ SV-512 cable. Requires Safety Vision back-up camera option. Camera to be located on driver's side above forward tandem of rear axle.	$885
5350-0174	Safety Vision officer's side camera SV-622RS w/ SV-512 cable. Requires Safety Vision back-up camera option. Camera to be located on officer's side above forward tandem of rear axle.	$885
5350-0175	David Clark model 3800 intercom system with (4) cab head sets. Headsets to be shipped loose.	$6,029
5350-0176	David Clark model 3800 intercom system with (5) cab head sets and (1) pump panel jack. Custom cabs only. Headsets to be shipped loose.	$8,975
5350-0177	FireCom (4) position wireless 5yr extended warranty. Includes 5-day repair time with 2-day shipping.	$1,749
5350-0180	Safety Vision officer's side camera SV-622RS w/ SV-512 cable. Requires Safety Vision back-up camera option. Camera to be located up high on officer side of the cab centrally located (above canopy window if applicable) interlocked with left turn signal. Camera only - does not include monitor.	$917
5350-0181	Camera back-up Safety Vision LCD model SV-CLCD70BA-620A with audio. For use with up to 2 cameras.	$2,172
5350-0182	Safety Vision officer's side camera SV-622RS w/ SV-512 cable. Requires Safety Vision back-up camera option. Camera to be located on front cab corner (approx 31" bottom of camera to bottom of cab) interlocked with right turn signal. Camera only - does not include monitor.	$917
5350-0183	Safety Vision driver's side camera SV-622LS w/ SV-512 cable. Requires Safety Vision back-up camera option. Camera to be located on front cab corner (approx 31" bottom of camera to bottom of cab) interlocked with left turn signal. Camera only - does not include monitor.	$917
5350-0186	Back-up camera speaker. For use with V-MUX electrical system. Located in cab accessible to driver.	$210
5350-0188	Federal Signal (Sony) back-up camera wire through multiplex display. Video displays automatically when transmission is in reverse.	$666
5350-0189	Zone Defense PathFindIR FLIR camera. Located centered below windshield. For use with Safety Zone Defense split screen back-up camera system only. Includes guarded switch on driver side lower dash area.	$6,085
5350-0190	Zone Defense side camera. Requires Zone Defense back-up camera option. Camera to be located on driver's and officer's side mirror.	$467
5350-0192	Safety Vision back-up camera wired through multiplex display. Video displays automatically when transmission is in reverse. Camera only - does not include monitor.	$885
5350-0193	Voyager rear facing camera positioned on officer's side front cab corner (approx 31" bottom of camera to bottom of cab) interlocked with right turn signal. Camera only - does not include monitor.	$670
5350-0194	Voyager rear facing camera positioned on driver's side front cab corner (approx 31" bottom of camera to bottom of cab) interlocked with left turn signal. Camera only - does not include monitor.	$670
5350-0196	Sigtronics US-67D intercom system with (5) cab jacks, (1) pump panel jack, five headsets / hooks, PTT switches for driver / officer / ppnl. Does not include radio interface cable. Custom cabs only. Headsets to be shipped loose.	$4,927
5350-0197	Safety Vision officer's side camera SV-622RS w/ SV-512 cable. Requires Safety Vision back-up camera option. Camera to be located on front fender interlocked with right turn signal. Camera only - does not include monitor.	$917
5350-0198	Voyager rear facing camera positioned on officer's side front fender interlocked with right turn signal. Camera only - does not include monitor.	$670
5350-0199	FireCom intercom kit to include a digital intercom model 5100D, four (4) plug in modules and headset hooks shall be installed within the cab. Headsets are not included and ordered separately (misc loose equip).	$2,594
5350-0200	FireCom intercom kit to include a digital intercom model 5100D, four (4) plug in modules and headset hooks shall be installed within the cab and one (1) exterior pump panel plug in module. Headsets are not included and ordered separately (misc loose equip).	$2,818
5350-0201	FireCom intercom kit to include a digital intercom model 5100D, six (6) plug in modules and headset hooks shall be installed within the cab. Headsets are not included and ordered separately (misc loose equip).	$2,939
5350-0202	FireCom intercom kit to include a digital intercom model 5100D, six (6) plug in modules and headset hooks shall be installed within the cab and one (1) exterior pump panel plug in module. Headsets are not included and ordered separately (misc loose equip).	$3,201

5350-0203	FireCom intercom kit to include a digital intercom model 5100D, five (5) plug in modules and headset hooks shall be installed within the cab. Headsets are not included and ordered separately (misc loose equip).	$2,786
5350-0204	FireCom intercom kit to include a digital intercom model 5100D, five (5) plug in modules and headset hooks shall be installed within the cab and one (1) exterior pump panel plug in module. Headsets are not included and ordered separately (misc loose equip).	$3,009
5350-0205	FireCom wireless intercom kit to include a digital intercom model 5100D, two (2) base transmit units with radio transmission, one (1) base transmit unit for intercom only (no radios) and four (4) headset hooks shall be installed within the cab. Headsets are not included and ordered separately (misc loose equip).	$4,007
5350-0206	FireCom wireless intercom kit to include a digital intercom model 5100D, two (2) base transmit units with radio transmission, one (1) base transmit unit for intercom only (no radios) and five (5) headset hooks shall be installed within the cab. Headsets are not included and ordered separately (misc loose equip).	$4,041
5350-0207	FireCom wireless intercom kit to include a digital intercom model 5100D, two (2) base transmit units with radio transmission, one (1) base transmit unit for intercom only (no radios) and six (6) headset hooks shall be installed within the cab. Headsets are not included and ordered separately (misc loose equip).	$4,073
5350-0208	FireCom intercom kit to include a dual radio digital intercom model 5200D, four (4) plug in modules and headset hooks shall be installed within the cab. Headsets are not included and ordered separately (misc loose equip).	$3,042
5350-0209	FireCom intercom kit to include a dual radio digital intercom model 5200D, four (4) plug in modules and headset hooks shall be installed within the cab and one (1) exterior pump panel plug in module. Headsets are not included and ordered separately (misc loose equip).	$3,266
5350-0210	FireCom intercom kit to include a dual radio digital intercom model 5200D, six (6) plug in modules and headset hooks shall be installed within the cab. Headsets are not included and ordered separately (misc loose equip).	$3,387
5350-0211	FireCom intercom kit to include a dual radio digital intercom model 5200D, six (6) plug in modules and headset hooks shall be installed within the cab and one (1) exterior pump panel plug in module. Headsets are not included and ordered separately (misc loose equip).	$3,650
5350-0212	FireCom intercom kit to include a dual radio digital intercom model 5200D, five (5) plug in modules and headset hooks shall be installed within the cab. Headsets are not included and ordered separately (misc loose equip).	$3,235
5350-0213	FireCom intercom kit to include a dual radio digital intercom model 5200D, five (5) plug in modules and headset hooks shall be installed within the cab and one (1) exterior pump panel plug in module. Headsets are not included and ordered separately (misc loose equip).	$3,458
5350-0214	FireCom wireless intercom kit to include a dual radio digital intercom model 5200D, two (2) base transmit units with radio transmission, one (1) base transmit unit for intercom only (no radios) and four (4) headset hooks shall be installed within the cab. Headsets are not included and ordered separately (misc loose equip).	$4,426
5350-0215	FireCom wireless intercom kit to include a dual radio digital intercom model 5200D, two (2) base transmit units with radio transmission, one (1) base transmit unit for intercom only (no radios) and five (5) headset hooks shall be installed within the cab. Headsets are not included and ordered separately (misc loose equip).	$4,457
5350-0216	FireCom wireless intercom kit to include a dual radio digital intercom model 5200D, two (2) base transmit units with radio transmission, one (1) base transmit unit for intercom only (no radios) and six (6) headset hooks shall be installed within the cab. Headsets are not included and ordered separately (misc loose equip).	$4,489
5350-0219	Safety Vision officer's side camera SV-622RS w/ SV-512 cable. Requires Safety Vision back-up camera option. Camera to be located on the officer side cab, up high behind front door, below the scene light interlocked with right turn signal. Camera only - does not include monitor.	$917
5350-0221	Setcom intercom kit to include a intercom model IM-900 and four (4) plug in modules shall be installed within the cab. Headsets are not included and ordered separately (misc loose equip).	$1,267
5350-0222	Setcom dual radio intercom kit to include a intercom model IM-900 and four (4) plug in modules shall be installed within the cab. Headsets are not included and ordered separately (misc loose equip).	$1,718
5350-0223	Setcom intercom kit to include a intercom model IM-900, four (4) plug in modules shall be installed within the cab and (1) pump panel plug in module. Headsets are not included and ordered separately (misc loose equip).	$1,611
5350-0224	Setcom dual radio intercom kit to include a intercom model IM-900, four (4) plug in modules shall be installed within the cab and (1) pump panel plug in module. Headsets are not included and ordered separately (misc loose equip).	$2,062
5350-0225	Setcom intercom kit to include a intercom model IM-900 and five (5) plug in modules shall be installed within the cab. Headsets are not included and ordered separately (misc loose equip).	$1,569
5350-0226	Setcom dual radio intercom kit to include a intercom model IM-900 and five (5) plug in modules shall be installed within the cab. Headsets are not included and ordered separately (misc loose equip).	$2,019
5350-0227	Setcom intercom kit to include a intercom model IM-900, five (5) plug in modules shall be installed within the cab and (1) pump panel plug in module. Headsets are not included and ordered separately (misc loose equip).	$1,913
5350-0228	Setcom dual radio intercom kit to include a intercom model IM-900, five (5) plug in modules shall be installed within the cab and (1) pump panel plug in module. Headsets are not included and ordered separately (misc loose equip).	$2,362

5350-0229	Setcom intercom kit to include a intercom model IM-900 and six (6) plug in modules shall be installed within the cab. Headsets are not included and ordered separately (misc loose equip).	$1,569
5350-0230	Setcom dual radio intercom kit to include a intercom model IM-900 and six (6) plug in modules shall be installed within the cab. Headsets are not included and ordered separately (misc loose equip).	$2,019
5350-0231	Setcom intercom kit to include a intercom model IM-900, six (6) plug in modules shall be installed within the cab and (1) pump panel plug in module. Headsets are not included and ordered separately (misc loose equip).	$1,913
5350-0232	Setcom dual radio intercom kit to include a intercom model IM-900, six (6) plug in modules shall be installed within the cab and (1) pump panel plug in module. Headsets are not included and ordered separately (misc loose equip).	$2,362
5350-0233	Setcom wireless intercom kit to include a intercom model IM-900 and four (4) wireless adapters shall be installed within the cab. Headsets are not included and ordered separately (misc loose equip).	$1,841
5350-0234	Setcom wireless dual radio intercom kit to include a intercom model IM-900 and four (4) wireless adapters shall be installed within the cab. Headsets are not included and ordered separately (misc loose equip).	$2,291
5350-0235	Setcom wireless intercom kit to include a intercom model IM-900 and five (5) wireless adapters shall be installed within the cab. Headsets are not included and ordered separately (misc loose equip).	$2,262
5350-0236	Setcom wireless dual radio intercom kit to include a intercom model IM-900 and five (5) wireless adapters shall be installed within the cab. Headsets are not included and ordered separately (misc loose equip).	$2,713
5350-0237	Setcom wireless intercom kit to include a intercom model IM-900 and six (6) wireless adapters shall be installed within the cab. Headsets are not included and ordered separately (misc loose equip).	$2,384
5350-0238	Setcom wireless dual radio intercom kit to include a intercom model IM-900 and six (6) wireless adapters shall be installed within the cab. Headsets are not included and ordered separately (misc loose equip).	$2,835
5350-0239	David Clark model 3800 intercom system with (4) cab head sets and (1) pump panel jack. Custom cabs only. Headsets to be shipped loose.	$8,113
5350-0241	Zone Defense side camera. Requires Zone Defense back-up camera option. Camera to be located on officer's side mirror.	$251
5350-0242	FireCom (8) position, (1) which is wireless. Intercom kit to include a digital quad radio monitor intercom model 5400D, one (1) base transmit unit with radio transmission (for wireless), seven (7) plug in modules and eight (8) headset hooks shall be installed within the cab. Headsets are not included and ordered separately (misc loose equip).	$5,541
5350-0243	FireCom intercom kit to include a digital intercom model 5100D, eight (8) plug in modules and headset hooks shall be installed within the cab. Headsets are not included and ordered separately (misc loose equip).	$3,361
5350-0245	FireCom (2) wireless (2) plug in intercom kit to include a digital intercom model 5100D, two (2) base transmit units with radio transmission for forward poisitions, (2) plug in modules for rear positions and four (4) headset hooks shall be installed within the cab. Headsets are not included and ordered separately (misc loose equip).	$3,654
5350-0246	Voyager rear facing camera positioned on officer's side front cab mirror (approx 31" bottom of camera to bottom of cab) interlocked with right turn signal. Camera only - does not include monitor.	$670
5350-0247	Remote 5100D head for Firecom intercom. Location: [#LOC].	$575
5350-0248	Remote 5200D head for Firecom intercom. Location: [#LOC].	$652
5350-0249	Sigtronics US-45S Ultrasound Intercom System with (4) cab jacks, (4) headsets, (2) SE-8RPTT headsets dual speaker, flex boom mic with radio push to talk switch, (2) SE-8 headsets dual speaker, flex boom mic. Includes HLN6961 radio interface cable. Custom cabs only. Headsets to be shipped loose.	$5,249
5350-0251	Camera system Brigade 360. Includes 4 cameras located front, rear, left and right. Requires seperate multiplex color display as the monitor. Note: cameras must be located as high as possible with side cameras centrally located. (Requires approval for stainless steel prodcut.)	$7,115
5350-0252	Brigade Digital Video Recorder model MDR-304 for use with Brigade camera system.	$2,182
5350-0253	Voyager officer camera positioned on the officer's side of the speedlay module up high near the E-ONE Logo looking downward. Camera only - does not include monitor	$670
5350-0254	Zone Defense back-up camera wired through multiplex display. Video displays automatically when transmission is in reverse. Camera only - does not include monitor.	$467
5350-0255	Foot switch driver side Setcom. Trico foot switch to key the microphone includes 16' cable.	$345
5350-0256	Install customer supplied communication system. Antenna installed at manufacturers discretion. Programming to be done by customer. Wire to master switch to toggle radio on and off with master power.	$1,408
5350-0257	Federal Signal (Sony) driver's side camera. Camera to be located up high on driver side of the cab centrally located (above canopy window if applicable) interlocked with left turn signal. Camera only - does not include monitor.	$666
5350-0258	Federal Signal (Sony) officer's side camera. Camera to be located up high on officer side of the cab centrally located (above canopy window if applicable) interlocked with left turn signal. Camera only - does not include monitor.	$666
5350-0261	David Clark model 3800 intercom system with (8) head sets and (1) pump panel jack. Custom cabs only. Headsets to be shipped loose.	$11,523
5350-0262	David Clark model 3800 intercom system with (8) cab head sets. Headsets to be shipped loose.	$9,663

5350-0263	Sigtronics US-12S intercom system with (8) cab jacks, (1) pump panel jack, eight headsets / hooks, PTT switches for driver / officer / ppnl. Does not include radio interface cable. Custom cabs only. Headsets to be shipped loose.	$7,024
5350-0264	Safety Vision camera. Requires Safety Vision back-up camera option or multiplex display. SV-625B Kit. Camera to be located driver side compartment top above dump chute, officer side below diamond plate mounting box for scene light above dump chute.	$1,770
5350-0265	FireCom intercom kit to include a digital intercom model 5100D, six (6) plug in modules and headset hooks shall be installed within the cab and one (1) exterior plug in module in L1 adjacent to breaker box (if equipped). Headsets are not included and ordered separately (misc loose equip).	$3,201
5350-0267	FireCom (4) position, (1) which is wireless. Intercom kit to include a digital intercom model 5100D, one (1) base transmit unit with radio transmission (for wireless), (3) plug in modules and (4) headset hooks shall be installed within the cab. Headsets are not included and ordered separately (misc loose equip).	$3,032
5350-0268	Install customer supplied new FireCom 5100D (4) cab, (1) pump panel intercom system.	$682
5350-0269	Camera system Voyager model AOM713WP 7" waterproof monitor with VCMS10B camera located on officer side pump module up high. Monitor located on pump operator panel.	$1,211
5350-0270	Federal Signal (Sony) driver's side camera. Camera to be located on front cab corner (approx 31" bottom of camera to bottom of cab) interlocked with left turn signal. Camera only - does not include monitor.	$666
5350-0271	Federal Signal (Sony) officer's side camera. Camera to be located on front cab corner (approx 31" bottom of camera to bottom of cab) interlocked with right turn signal. Camera only - does not include monitor.	$666
5350-0275	Zone Defense PathFindIR FLIR camera. Located centered below windshield. No monitor included; camera only. Video wired through multiplex display in cab.	$6,085
5350-0276	Back-up camera speaker. For use with V-MUX electrical system. Located on driver side overhead console.	$210
5350-0277	FireCom (5) position, (1) which is wireless. Intercom kit to include a digital intercom model 5100D, one (1) base transmit unit with radio transmission (for wireless), (4) plug in modules and (5) headset hooks shall be installed within the cab. Headsets are not included and ordered separately (misc loose equip).	$3,108
5350-0278	FireCom wireless intercom kit to include a digital intercom model 5100D, two (2) base transmit units with radio transmission, and two (2) headset hooks shall be installed within the cab. Headsets are not included and ordered separately (misc loose equip).	$2,968
5350-0279	FireCom intercom kit to include a digital intercom model 5100D, six (6) plug in modules and headset hooks shall be installed within the cab and one (1) exterior plug in module at the driver side rear of body. Headsets are not included and ordered separately (misc loose equip).	$3,201
5350-0280	FireCom (6) position, (1) which are wireless. Intercom kit to include a digital intercom model 5100D, two (1) base transmit unit with radio transmission (for wireless), (5) plug in modules and (6) headset hooks shall be installed within the cab. Headsets are not included and ordered separately (misc loose equip).	$3,183
5350-0283	Zone Defense side camera. Requires Zone Defense back-up camera option. Camera to be located on officer's side of cab ahead of cab door driprail approx. 31" above bottom of cab.	$467
5350-0284	Zone Defense side camera. Requires Zone Defense back-up camera option. Camera to be located on driver's side of cab ahead of cab door driprail approx. 31" above bottom of cab.	$467
5350-0285	FireCom (6) position, (2) which are wireless. Intercom kit to include a digital intercom model 5100D, two (2) base transmit unit with radio transmission (for wireless), (4) plug in modules and (4) headset hooks shall be installed within the cab. Headsets are not included and ordered separately (misc loose equip).	$3,700
5350-0286	FireCom (6) position, (2) which are wireless. Intercom kit to include a digital intercom model 5200D, two (2) base transmit unit with radio transmission (for wireless), (4) plug in modules and (6) headset hooks shall be installed within the cab. Headsets are not included and ordered separately (misc loose equip).	$4,439
5350-0287	Brushed stainless steel camera shield.	$240
5350-0289	FireCom (5) position, (2) which are wireless. Intercom kit to include a digital intercom model 5100D, two (2) base transmit unit with radio transmission (for wireless), (3) plug in modules and (5) headset hooks shall be installed within the cab. Headsets are not included and ordered separately (misc loose equip).	$3,687
5350-0291	Sigtronics US-67S intercom system with (6) cab jacks, (1) pump panel jack, six headsets / hooks, PTT switches for driver / officer / ppnl. Does not include radio interface cable. Custom cabs only. Headsets to be shipped loose.	$5,628
5350-0292	Sigtronics US-45D intercom system with (3) cab jacks, (1) pump panel jack, (1) turntable jack, three headsets / hooks, PTT switches for driver/officer/ppnl/turntable. Does not include radio interface cable. Custom cabs only. Headsets to be shipped loose.	$4,151
5350-0293	FireCom intercom kit to include a digital intercom model 5100D, five (5) plug in modules and headset hooks shall be installed within the cab and one (1) exterior plug in module at the driver side rear of body. Headsets are not included and ordered separately (misc loose equip).	$3,009
5350-0295	Remote 5400D head for Firecom intercom. Location: [#LOC].	$815
5350-0296	FireCom (2) wireless (2) plug in intercom kit to include a digital intercom model 5400D, two (2) base transmit units with radio transmission for forward positions, (2) plug in modules for rear positions and four (4) headset hooks shall be installed within the cab. Headsets are not included and ordered separately (misc loose equip).	$4,981
5380-0004	Compartment light incandescent additional (EA). Locate opposite of standard (if applicable) in compartment [#LOC]	$73

5380-0005	Compartment light Truck-Lite LED additional (EA). Locate opposite of standard in compartment [#LOC].	$191
5380-0006	Compartment light incandescent additional (EA). Door(s) mounted. Compartment [#LOC].	$115
5380-0007	Compartment light Truck-Lite LED additional (EA). Door(s) mounted. Compartment [#LOC].	$261
5380-0008	Compartment light package incandescent for small bodies.	$494
5380-0009	Compartment light package incandescent for medium bodies.	$736
5380-0011	Compartment light package LED for small bodies.	$1,756
5380-0012	Compartment light package Truck-Lite LED for medium bodies.	$2,938
5380-0014	Compartment light package ROM for small bodies. Includes one light per compartment (two if transverse). (OBSOLETE FROM VENDOR)	$1,911
5380-0015	Compartment light package ROM for medium bodies. Includes one light per compartment (two if transverse). (OBSOLETE FROM VENDOR)	$3,050
5380-0017	Compartment light package POK LED for small bodies. Includes one light per compartment (two if transverse).	$2,261
5380-0018	Compartment light package POK LED for medium bodies. Includes one light per compartment (two if transverse).	$3,695
5380-0020	Compartment light ROM 14-48" long additional (EA). Locate [#LOC]. (OBSOLETE FROM VENDOR)	$303
5380-0021	Compartment light ROM 49-84" long additional (EA). Locate [#LOC]. (OBSOLETE FROM VENDOR)	$448
5380-0022	Compartment light POK LED additional (EA). Locate [#LOC].	$326
5380-0023	Compartment light POK LED additional (EA). Locate [#LOC].	$559
5380-0027	Ground light package for cab and body - small.	$458
5380-0029	Ground light package for cab and body - large.	$687
5380-0030	Ground light package LED - small.	$1,496
5380-0032	Ground light package LED - large.	$2,238
5380-0033	Step light package body - small.	$428
5380-0035	Step light package body - large.	$640
5380-0036	Step light package body LED - small.	$1,464
5380-0038	Step light package body LED - large.	$2,193
5380-0042	Light recessed step Truck-Lite incandescent (additional). Locate [#LOC].	$118
5380-0045	Light recessed step Truck-Lite LED (additional). Locate [#LOC].	$180
5380-0053	Lights under rear intermediate step LED (2). 4" grommet mounted lights. Lights operated with switch on rear of body. Locate switch below driver side intermediate step.	$531
5380-0055	Cab and body ground lights to be wired through chassis reverse.	$76
5380-0056	Compartment lights to be wired to automatically activate when park brake is set (IPO cab mtd compartment light switch).	$76
5380-0059	Additional incandescent ground lights. Locate below L1/R1 and L3/R3.	$516
5380-0060	Additional LED ground light (EA). Location: Below [#LOC].	$202
5380-0061	LED hosebed walkway light package. Includes lighting located to the outboard side of the walkway and (1) at the rear of the walkway facing forward. Lights to be switched with work light switch in cab.	$690
5380-0062	Compartment light Federal Signal LED additional (EA). Locate opposite of standard in compartment [#LOC].	$134
5380-0063	Compartment light Federal Signal LED additional (EA). Door(s) mounted. Compartment [#LOC].	$202
5380-0064	Compartment light package Federal Signal LED for small bodies.	$1,404
5380-0065	Compartment light package Federal Signal LED for medium bodies.	$2,388
5380-0067	Ground light package Federal Signal LED - small.	$1,496
5380-0068	Ground light package Federal Signal LED - large.	$2,239
5380-0069	Step light package body Federal Signal LED - small.	$1,123
5380-0070	Step light package body Federal Signal LED - large.	$1,688
5380-0071	Light Federal Signal recessed step LED (additional). Locate [#LOC].	$144
5380-0072	Additional Federal Signal LED ground light (EA). Location: Below [#LOC]	$189
5380-0075	Compartment light incandescent additional (EA). Locate on ceiling of [#LOC].	$73
5380-0076	Compartment light deluxe package Whelen PSC0CDCR LED for medium bodies. Light to be stacked vertically on both sides of compartment.	$7,677
5380-0077	Compartment light package Amdor Luma-Bar LED for medium bodies. Includes one light per compartment (two if transverse).	$2,409
5380-0078	Compartment light Amdor Luma-Bar LED 26-42" long additional (EA). Locate [#LOC].	$233
5380-0079	Compartment light Amdor Luma-Bar LED 48-74" long additional (EA). Locate [#LOC].	$355
5380-0081	Compartment light package Whelen LED for medium bodies.	$4,572
5380-0082	Ground light package Whelen LED - large.	$3,026
5380-0083	Step light package Whelen LED - large.	$3,026
5380-0085	Compartment light package incandescent for small bodies.	$494
5380-0087	Compartment light package Weldon LED for medium bodies.	$1,964
5380-0088	Ground light package Weldon LED - small.	$1,348
5380-0089	Step light package body Weldon LED - small.	$981
5380-0090	Compartment light LED (EA). Location: [#LOC].	$191
5380-0098	Compartment light package Whelen PSC0CDCR LED for medium bodies. Light to be stacked vertically on one side of compartment.	$3,840
5380-0111	Compartment light Amdor LED for medical cabinet (EA).	$233
5380-0116	Ground light package Amdor Luma-Bar H2O LED - large.	$1,734
5380-0121	(2) Incandescent 4" round lights for use with preconnect module. Locate (1) each side on front compartment face down low.	$164

5380-0122	(2) Weldon LED 4" round lights for use with preconnect module. Locate (1) each side on front compartment face down low.	$240
5380-0123	Incandescent ground light package for cab, body and transverse/preconnect modules. Includes (1) light under each cab crew door (Lights under the driver and crew area exits to activate automatically with door is opened), (1) light under each side of the extended front bumper gravel shield (when applicable), (1) light centered each side below the transverse/preconnect module, (2) lights below rear tailboard area and (1) light centered below the pump operator compartment.	$562
5380-0124	Weldon LED ground light package for cab, body and transverse/preconnect modules. Includes (1) light under each cab crew door (Lights under the driver and crew area exits to activate automatically with door is opened), (1) light under each side of the extended front bumper gravel shield (when applicable), (1) light centered each side below the transverse/preconnect module, (2) lights below rear tailboard area and (1) light centered below the pump operator compartment.	$576
5380-0125	Incandescent body compartment light package for body and preconnect module. Lights locate (1) each preconnect tool compartment, (2) each for L1/R1, (1) each for L2/R2 and (2) each for L3/R3 (pump operator compartment to have the lights in the lower area only)	$736
5380-0126	Incandescent body compartment light package for body and transverse module. Lights locate (4) transverse module- (2) each on forward wall of each opening, (2) each for L1/R1, (1) each for L2/L3 and (2) each for L3/R3 (pump operator compartment to have the lights in the lower area only)	$659
5380-0127	LED body compartment light package for body and preconnect module. Lights locate (1) each preconnect tool compartment, (2) each for L1/R1, (1) each for L2/R2 and (2) each for L3/R3 (pump operator compartment to have the lights in the lower area only)	$1,048
5380-0128	LED body compartment light package for body and transverse module. Lights locate (4) transverse module- (2) each on forward wall of each opening, (2) each for L1/R1, (1) each for L2/R2 and (2) each for L3/R3 (pump operator compartment to have the lights in the lower area only)	$1,157
5380-0132	Compartment light Weldon LED additional (EA). Locate opposite of standard in compartment [#LOC].	$111
5380-0133	Light recessed step Weldon LED (additional). Locate [#LOC]	$121
5380-0138	Compartment light ROM V3 LED 24-36" long additional (EA). Locate [#LOC].	$259
5380-0140	Compartment light ROM V3 LED for medical cabinet (EA).	$318
5380-0141	Compartment light package ROM V3 LED for medium bodies. Includes one light per compartment (two if transverse).	$2,877
5380-0142	Compartment light package ROM V3 LED for medium bodies. Includes two lights per compartment (four if transverse).	$5,755
5380-0144	Compartment light package Amdor Luma-Bar LED for medium bodies. Includes two lights per compartment (four if transverse).	$4,818
5380-0146	Compartment light Amdor LED additional (EA) ceiling mounted as close to door opening as practical. Location: [#LOC].	$233
5380-0161	Light recessed step Truck-Lite incandescent. Locate one each side of top mount walkway.	$234
5380-0162	Light recessed step Truck-Lite LED. Locate one each side of top mount walkway.	$356
5380-0163	Light recessed step Federal Signal LED. Locate one each side of top mount walkway.	$288
5380-0166	Compartment light Trucklite LED additional (EA). Locate in [#LOC].	$191
5380-0167	Rear body TecNiq model Eon step light package.	$569
5380-0182	Ground light package EON LED - large.	$1,255
5380-0183	TM Walkway lighting TecNiq EON LED. Includes (3) lights with S/S housings low on front of module to illuminate top mount walkway. eMAX only	$229
5380-0187	Compartment light package ROM V3 LED for small bodies. Includes one light per compartment (two if transverse).	$1,771
5380-0188	Compartment light package ROM V3 LED for small bodies. Includes two lights per compartment (four if transverse).	$3,539
5380-0189	Compartment light package Amdor Luma-Bar LED for small bodies. Includes one light per compartment (two if transverse).	$1,503
5380-0190	Compartment light package Amdor Luma-Bar LED for small bodies. Includes two lights per compartment (four if transverse).	$3,003
5380-0202	Step light package body EON LED - large.	$1,066
5380-0203	Step light package body EON LED - small.	$723
5380-0207	Intermediate pump panel step lights (PR). EON LED lights.	$118
5380-0209	Compartment light Amdor LED for medical cabinet (PR).	$466
5380-0210	Compartment light ROM V3 LED for medical cabinet (PR).	$635
5380-0212	Lights (PR) Tecniq EON LED lights, 1 each side (driver and officer side) of the speedlay storage compartment.	$232
5380-0214	Compartment light Truck-Lite LED additional (EA). Locate on ceiling of [#LOC].	$191
5380-0215	Six (6) 30" Amdor LED strip lights for NFPA hose bed lighting. The perimeter of the hose bed shall be framed on the top surface of the front, left and right side walls. The aluminum perimeter framing shall be used to mount the strip lights (2) each side and (2) in front to provide illumination of the hose bed area. This perimeter framing shall also be used to secure the vinyl hose bed cover and protect the lighting during stow and deploy hose bed operations.	$2,286
5380-0216	Ground light package LED for chassis. Includes (6) Trucklite LED lts.	$1,286
5380-0217	Compartment light Whelen Fluorent Plus for medical cabinet (PR).	$658
5380-0218	Step light package Whelen LED - small.	$1,674
5380-0220	Compartment light package, Whelen Fluorent Plus, for medium bodies. Includes two lights per compartment (four if transverse).	$7,150

5380-0221	LED body compartment light package for body. Lights locate (2) each for L1/R1, (1) each for L2/R2, (2) each for L3/R3 and (2) each for L4/R4 (pump operator compartment to have the lights in the lower area only)	$1,157
5380-0223	Amdor LED strip lights for NFPA hose bed lighting. The lights to be mounted inside hose bed cover thru cover plate on outer skin. Light will illuminate the hose bed area thru slots in the inner skin.	$2,286
5380-0226	Compartment light Amdor white lumbar. Location: [#LOC].	$207
5380-0228	Stainless steel bolt on light guard to protect hose bed lightring fixture(s) from damage.	$111
5380-0235	Ground light package Amdor Luma Bar H2O LED - small.	$919
5380-0236	Additional LumaBar H20 LED ground light (EA). Location: Below [#LOC].	$159
5380-0237	Cab step lighting package. Includes (2) EON LED lights per side IPOS.	$240
5380-0238	Compartment light package Amdor Luma-Bar Red LED for small bodies. Includes one light per compartment (two if transverse).	$1,503
5380-0239	Whelen PELCC ground light package LED - large.	$2,710
5380-0240	Compartment light package Amdor Luma-Bar Red LED for medium bodies. Includes one light per compartment (two if transverse).	$2,409
5380-0241	Ground light package TecNiq LED - small.	$468
5380-0242	Ground light package TecNiq LED - large.	$701
5380-0243	Compartment light package TecNiq LED for medium bodies.	$807
5380-0244	Compartment light package TecNiq LED for small bodies.	$484
5380-0245	Compartment light ROM V4 LED 24-36" long additional (EA). Locate [#LOC].	$259
5380-0246	Compartment light ROM V4 LED 42-72" long additional (EA). Locate [#LOC].	$433
5380-0247	Compartment light ROM V4 LED for medical cabinet (EA).	$318
5380-0248	Compartment light ROM V4 LED for medical cabinet (PR).	$635
5380-0249	Compartment light package ROM V4 LED for small bodies. Includes one light per compartment (two if transverse).	$1,771
5380-0250	Compartment light package ROM V4 LED for small bodies. Includes two lights per compartment (four if transverse).	$3,539
5380-0251	Compartment light package ROM V4 LED for medium bodies. Includes one light per compartment (two if transverse).	$2,877
5380-0252	Compartment light package ROM V4 LED for medium bodies. Includes two lights per compartment (four if transverse).	$5,755
5380-0258	Light recessed step TecNiq LED. Locate one each side of top mount walkway.	$110
5380-0259	Compartment light ROM V4 LED additional (EA) ceiling mounted as close to door opening as practical. Location: [#LOC].	$318
5380-0261	Dunnage pan lights EON (PR). Evenly spaced on front wall of dunnage pan wired through pump panel lights.	$118
5380-0263	Raised bumper lid lights EON (PR). Evenly spaced under extra capacity lid wired through door ajar switch.	$215
5380-0264	Upper e-max forward module lights (2 PR). EON LED lights. Locate two (2) on driver and two (2) on officer upper sides of e-max forward module on upper side extrusion above logo panel over backboard storage. For additional lighting at module area wired through work lights switch.	$235
5380-0266	Whelen PELCC lights LED (PR). Wired through work light switch. Location: [#LOC].	$595
5380-0267	Compartment light package ROM V4 LED for Water Master. Includes two lights per compartment.	$1,269
5380-0269	Light Whelen Super-LED dome model 60CREGCS, Red / White. QTY (6). Light Location: Rehab module ceiling configured as close to sales drawing illustration as possible. Switching: White lights shall be wired to a master on/off rocker switch on the REHAB switch panel located in the corner radio cabinet and through the entry door. The red lights shall be wired through the light assembly switch only.	$1,640
5390-0000	Deck light - Unity 12 volt (PR). Location: [#LOC].	$362
5390-0001	Hose bed light Unity. Locate at front area of hose bed. Switched with work light switch in cab.	$176
5390-0002	Hose bed light Federal Signal GH Scene. Locate at the front area of hose bed. Switched with work light switch in cab.	$227
5390-0003	Hose bed light Truck-Lite. Locate at the front area of the hose bed. Switched with work light switch in cab.	$105
5390-0004	Crosslay lights Weldon. Locate on each side at rear of crosslay (SM) or forward of crosslay (TM) approx. 16" from side of body.	$322
5390-0005	Crosslay light deck Unity. Locate to rear of crosslay (SM) or forward of crosslay (TM).	$171
5390-0006	Deck lights, Collins FX-12R (PR). Location: [#LOC].	$1,031
5390-0007	Deck/scene light circuit wiring through chassis reverse. Requires rear deck or scene light.	$76
5390-0008	Federal Signal GH scene lights (PR). Switch in cab (driver and officer side facing lights switched separately). Locate [#LOC].	$426
5390-0018	Whelen 600 series 26 degree scenelights (PR) with weatherproof connectors. Switch in cab (driver and officer side facing lights switched separately). Locate [#LOC].	$337
5390-0019	Whelen 700 series 8-32 degree scenelights (PR) with weatherproof connectors. Switch in cab (driver and officer side facing lights switched separately). Locate [#LOC].	$331
5390-0020	Whelen 900 series Gradient Opti-Scenelight (PR) with weatherproof connectors. Switched in cab (driver and officer side facing lights switched separately). Locate [#LOC].	$337
5390-0022	Crosslay light Truck-Lite. Locate to rear of crosslay (SM) and forward of crosslay (TM as applicable). Switched with work light switch in cab.	$105
5390-0023	Tomar 46H13-C 13 degree scene lights (PR) with weatherproof connectors. Switch in cab (driver and officer side lights switched separately). Locate [#LOC].	$374
5390-0024	Deck Light - Truck-Lite (PR). Location: [#LOC].	$313
5390-0025	Cab scene lights are to be switched with cab doors in addition to standard.	$76

5390-0026	Federal Signal GH Scene cornering lights (PR) wired to turn signals, reverse and work lights. Location: [#LOC]	$815
5390-0027	Hosebed light Whelen 600 series 26 degree scene light with Cast Products LH46501 housing. Locate at the front area of hosebed. Switched with worklight switch in cab.	$210
5390-0029	Crosslay light Whelen 600 series 26 degree scene light with Cast Products LH46501 housing. Locate to rear of crosslay (SM) and forward of crosslay (TM as applicable). Switched with worklight switch in cab.	$210
5390-0030	Deck Lts-Collins FX-6 (PR) Location: [#LOC]	$1,031
5390-0031	Crosslay light Federal GH Scene light with Cast Products LH90603 housings (PR). Locate on back of cab 1" below roof between vista windows.	$609
5390-0034	Whelen 600 series 26 degree scene lights (PR) with weatherproof connectors. To be used as cornering lights wired to turn signals and four way flashers. Interlock through park brake. Location: [#LOC].	$337
5390-0035	Federal Signal GH Scene Light (PR). Locate (1) at the front area of hosebed and (1) rearward of the crosslays. Switched with worklight switch in cab. Includes diamond plate mounting box.	$773
5390-0036	Hose bed light circuit wiring through chassis reverse. Requires hose bed light.	$76
5390-0038	4" LED light (black groument) with diamond plate box mount (PR). Locate (1) at front of hosebed and (1) at the crosslay area. Switch with work light switch.	$700
5390-0039	Federal Signal GH Scene lights (PR). Switch in cab (driver and officer side facing lights switched together). Locate [#LOC]	$426
5390-0040	Weldon 4 x 6 HID scene lights (PR) with weatherproof connectors. Switch in cab (driver and officer side lights switched separately). Locate [#LOC].	$1,196
5390-0041	Whelen 900 series Gradient Opti-Scene lights (PR) with diamond plate mounting box. Switch in cab (driver and officer side facing lights switched separately). Locate [#LOC].	$507
5390-0043	Crosslay light Trucklite. Locate forward of crosslay. Switched with work light switch in cab.	$105
5390-0044	4" LED light (black groument) with diamond plate box mount at front of hosebed. Switch with work light switch.	$340
5390-0046	Federal Signal GH Scene Light (PR). Locate (1) forward facing for preconnect storage lighting and (1) rearward facing for hosebed storage lighting. Both lights mounted in (1) formed box mounted off forward area of body. Box may shift side to side for best lighting application. both lights switched with worklight switch.	$773
5390-0047	Federal Signal GH scene Light. Locate rearward facing for hose bed storage lighting. Mounted in (1) formed box mounted off forward area of body. Box may shift side to side for best lighting application. Light switched with worklight switch.	$387
5390-0048	Whelen 600 series gradient Super LED scene lights (PR) with weatherproof connectors. Switch in cab (driver and officer side lights switched separately). Locate [#LOC].	$985
5390-0049	Whelen 600 series 26 degree scene lights (PR) with LH46001 castings. Switch in cab (side facing lights switched separately). Locate [#LOC].	$431
5390-0050	Whelen 500 series LED scene lights (PR) with weatherproof connectors. To be used as cornering lights wired to turn signals and four way flashers. Interlocked with park brake. Location: [#LOC]	$826
5390-0051	Whelen 600 series gradient Super LED scene lights (PR) with weatherproof connectors. To be used as cornering lights wired to turn signals and four way flashers. Location: [#LOC].	$985
5390-0052	Federal Signal GH Scene lights (PR) with diamond plate mounting box. Switch in cab (driver and officer side facing lights switched separately). Locate [#LOC].	$773
5390-0054	Hosebed light Trucklite. Locate (1) each side front of hosebed. Switched with work light switch in cab.	$210
5390-0055	Light Federal Signal GH Scene. Locate at the front area of hosebed. Switched with worklight switch in cab. Includes diamond plate mounting box.	$387
5390-0056	Crosslay light Weldon. Locate to rear of crosslay (SM) or forward of crosslay (TM). Switched with work light switch in cab.	$164
5390-0057	Hosebed light Weldon. Locate at front area of hosebed. Switched with work light switch in cab.	$164
5390-0058	Deck Lights - Truck-Lite LED model 81380 (PR). Location: [#LOC].	$396
5390-0059	Whelen 600 series 26 degree scene lights (PR) with diamond plate mounting box. Switch in cab (side facing lights switched separately). Locate [#LOC].	$536
5390-0066	Whelen 600 series gradient Super LED scene lights (PR) with weatherproof connectors and diamond plate mounting boxes. Switch in cab (driver and officer side lights switched separately). Locate [#LOC].	$1,079
5390-0068	Havis Shield 12V HID scene lights model KR-4035X-D (PR). Location(s): [#LOC]. Includes switch in cab for side facing lights.	$1,559
5390-0069	Whelen M9 Linear Super LED scene lights (PR). Switched in cab (lights mtd on the sides of apparatus to be switched separately). Locate [#LOC].	$1,607
5390-0070	Crosslay light Collins FX-12. Locate to rear of crosslay (SM) and forward of crosslay (TM as applicable).	$518
5390-0071	Hosebed light Collins FX-12. Located center front of hosebed. Switched with work light switch in cab	$518
5390-0072	Speedlay Light Federal Signal GH Scene. Locate on front of upper pump module facing downward to illuminate speedlays. Switched with worklight switch in cab.	$227
5390-0073	Deck Light - Whelen LED model PFBP12C (PR). Location: [#LOC].	$1,043
5390-0075	Speedlay light Trucklite. Locate forward area of pump module. Switched with work light switch in cab.	$105
5390-0076	Hose bed light Truck-Lite LED model 81380. Locate at front of hose bed. Switched with work light switch in cab.	$199

5390-0077	Deck Lt-Collins FX-12R (EA) model KR-SB-312 with lift/push up pole. Due to body mount location a position indicator will not be required. Location(s): [#LOC].	$870
5390-0079	Whelen 900 series Gradient Opti-Scene light (EA) with weatherproof connectors. Switch in cab (driver and officer side facing lights switched separately). Locate [#LOC].	$170
5390-0081	Deck Light - Grote LED model 63581 (PR) Location: [#LOC].	$1,641
5390-0082	Whelen 600 series 26 degree scene 24VDC lights (PR) with weatherproof connectors. Switch in cab (driver and officer side facing lights switched separately). Locate [#LOC].	$362
5390-0083	Federal Signal GH Scene light (EA). Switched with work light switch in cab. Locate up high driver rear of body.	$214
5390-0085	Speedlay light package. Includes (4) Kaper2 LED lights mounted (1) each side at speedlay openings to rear of extrusion. Switched with work light switch in cab.	$447
5390-0087	Whelen M6 Linear Super LED scene lights (PR). Switched in cab (lights mtd on the sides of apparatus to be switched separately). Locate [#LOC].	$1,155
5390-0088	Crosslay light Whelen PFBP12C LED. Locate to rear of crosslay (SM) and forward of crosslay (TM as applicable). Switched with work light switch in cab.	$523
5390-0089	Hose bed light Whelen PFBP12C LED. Locate center front of hose bed. Switched with work light switch in cab.	$523
5390-0090	Hosebed light Whelen 600 series Super LED scene light with diamond plate box. Locate at the front area of hosebed. Switched with worklight switch in cab.	$541
5390-0091	Crosslay light Whelen 600 series 26 degree Super LED scene light with diamond plate box. Locate to rear of crosslay (SM) and forward of crosslay (TM as applicable). Switched with worklight switch in cab.	$541
5390-0094	Federal Signal GH Scene light (EA). Switched with work light switch in cab. Locate up high center rear of body.	$214
5390-0096	Hosebed light Trucklite LED. Locate (1) in each outer hosebed upper front wall (if equipped) and (2) upper front wall of center hosebed . Switched with work light switch in cab.	$848
5390-0102	Crosslay light Truck-Lite LED model 81380. Locate to rear of crosslay (SM) and forward of crosslay (TM as applicable). Switched with work light switch in cab.	$199
5390-0103	Whelen 700 series gradient Super LED scene lights (PR) with weatherproof connectors. Switch in cab (driver and officer side lights switched separately). Locate [#LOC].	$956
5390-0104	Light Whelen Pioneer Plus model PFP1 with recess mount. Wired through work light switch in cab. Location(s): [#LOC].	$1,324
5390-0110	Hosebed light Grote LED model 63581. Locate center front of hosebed. Switched with work light switch in cab.	$822
5390-0111	Crosslay light Grote LED model 63581. Locate to rear of crosslay (SM) and forward of crosslay (TM as applicable). Switched with work light switch in cab.	$822
5390-0114	Whelen M6 Linear Super LED hosebed lights (PR) with weatherproof connectors and diamond plate mounting boxes. Locate equally spaced each side at the front area of hosebed. Switched with worklight switch in cab.	$1,327
5390-0117	Whelen 700 series gradient Super LED scene lights (PR). To be used as cornering lights wired to turn signals reverse and work lights. Location: [#LOC].	$985
5390-0118	Grote 63581 LED scene lights (6). Switch in cab (driver and officer side lights switched separately). Lights located (2) each side of body up high (offset forward and rearward) and (2) at rear of body up high. Wetside only.	$3,943
5390-0119	Light Whelen Pioneer Plus model PFP1 with ROM KR-SB-600-W4 pedestal side mount. Switched with work light switch in cab. Location(s): [#LOC].	$2,646
5390-0122	Whelen 900 series model 90C0ENZR Super LED Opti-Scene light (PR) with cast products mounting box. Switch in cab (driver and officer side lights switched separately). Locate [#LOC].	$1,796
5390-0123	Federal Signal model QL97LEDSCENE LED scene light (PR) with weatherproof connectors. Includes switch accessible to driver (driver and officer side lights switched separately). Locate [#LOC].	$963
5390-0124	Whelen 600 series gradient Super LED scene lights (3) with weatherproof connectors. Wire through work light switch in cab. Locate back of cab evenly spaced up high.	$1,476
5390-0126	Whelen M6 Linear Super LED hosebed light with weatherproof connector and diamond plate mounting box. Locate at the front area of hosebed. Switched with work light switch in cab.	$665
5390-0127	Light Whelen 600 series 26 degree Super LED scene light. Locate to rear of body, driver side, centered vertically between tail light and upper rear warning. Switched with work-light switch in cab.	$541
5390-0129	Hose bed light FRC LED900 with diamond plate mounting box. Locate [#LOC]. Switched with worklight switch in cab.	$895
5390-0130	Deck light Whelen PAR-36, model PFBP12C LED (PR). Switched with work light switch in cab. Location: [#LOC].	$1,043
5390-0131	Crosslay light deck Unity. Locate light on the drivers side rearward of the crosslay door mounted on the Hot Shot II pan cover lid.	$171
5390-0132	Warning light Federal Signal QL64-BACKUP (PR) white with clear lens. Surface mounted with bezel. Location: [#LOC]	$600
5390-0133	Deck lights - Unity 12 volt LED spot (PR). Location: [#LOC].	$988
5390-0136	Whelen M9LZC Linear Super LED scene lights (PR), includes flange. Switched in cab (lights mounted on the sides of apparatus to be switched separately). Locate [#LOC].	$1,490
5390-0137	Whelen M9 Linear Super LED scene lights (PR) with weatherproof connectors and diamond plate mounting boxes. Switch in cab (driver and officer side lights switched separately). Locate [#LOC].	$1,778
5390-0139	Crosslay light Whelen PFBP12C LED (PR). Locate on each side at rear of crosslay (SM) or forward of crosslay (TM). Location: [#LOC]. Switched with work light switch in cab.	$1,043

5390-0140	Whelen 700 series gradient Super LED scene light (EA) with weatherproof connector(s). Switch in cab (driver and officer side lights if applicable switched separately). Locate [#LOC].	$469
5390-0141	Hosebed light Trucklite LED. Locate (1) in driver outer hosebed upper front wall and (2) upper front wall of center hosebed . Switched with work light switch in cab.	$635
5390-0143	Crosslay light deck Unity. Locate to driver side rear of crosslay.	$171
5390-0144	Unity deck light with model TP-1-I internal pull-up pole. Includes switch on lighthead and driver side overhead console. Location: [#LOC].	$580
5390-0145	EA (1) Collins FX-12 w/Internal Pole. Locate (1) Drivers side in deck gun channel. Light to serve as hosebed/crosslay lighting when applicable.	$898
5390-0146	Whelen M6 series gradient Super LED scene lights (PR) with weatherproof connectors. To be used as cornering lights wired to turn signals and four way flashers. Location: (1) each side offset rearward of rear most axle.	$1,438
5390-0149	Whelen 900 series model 90C0ENZR Super LED Opti-Scene light (EA) with diamond plate mounting box. Switch in cab (driver and officer side lights switched separately). Locate [#LOC].	$899
5390-0150	Whelen 900 series model 90C0ENZR Super LED Opti-Scene light (EA) with cast products mounting box. Switch in cab (driver and officer side light(s) switched separately). Locate [#LOC].	$899
5390-0151	Whelen M6 Linear Super LED scene lights (PR) with weatherproof connectors and diamond plate mounting boxes. Location: [#LOC]. Switched with worklight switch in cab.	$1,327
5390-0152	Whelen 600 series gradient Super LED surface mounted scene lights (PR) with weatherproof connectors. Switch in cab (driver and officer side lights switched separately). Locate [#LOC].	$985
5390-0154	Weldon model 3010-2600-30 scene lights (PR) with diamond plate mounting box. Switch in cab (driver and officer side facing lights switched separately). Locate [#LOC].	$731
5390-0155	Hose bed light Amdor H2O. Locate at the front area of hose bed. SideStacker only. Switched with work light switch in cab.	$337
5390-0156	Federal Signal model QL97LEDSCENE LED scene light (EA) with weatherproof connectors. Includes switch accessible to driver (driver and officer side lights switched separately). Locate [#LOC].	$482
5390-0157	Amdor Lumabar strip light on each side of the hosebed side upper extrusions. Switched with work light switch in cab.	$1,146
5390-0159	Whelen M6 Linear Super LED crosslay light with weatherproof connector and diamond plate mounting box. Locate to rear of crosslay (SM) and forward of crosslay (TM as applicable). Switched with work light switch in cab.	$665
5390-0160	Whelen M6 series gradient Super LED scene lights (PR) with weatherproof connectors. To be used as cornering lights wired to turn signals and four way flashers. Location: (1) each side front bumper gravelshield offset rearward.	$1,438
5390-0161	Whelen M9 Linear Super LED scene lights (PR) with weatherproof connectors and smooth plate mounting boxes painted job (2-tone if applicable) color. Switch in cab (driver and officer side lights switched separately). Locate [#LOC].	$1,830
5390-0162	Hose bed lights (2) Federal Signal GH Scene. Locate in the upper front wall of the hose bed. One (1) each side equally spaced from the outside of the hose bed. Switched with the work light switch in cab.	$454
5390-0163	ROM V4 LED strip lights for NFPA hose bed lighting. The lights to be mounted inside hose bed cover thru cover plate on outer skin. Light will illuminate the hose bed area thru slots in the inner skin.	$1,626
5390-0164	Whelen 900 series model 9SC0ENZR Super LED Opti-Scene light (PR) with weatherproof connectors. Switch in cab (driver and officer side lights switched separately). Locate [#LOC].	$1,625
5390-0165	Whelen 900 series model 9SC0ENZR Super LED Opti-Scene light (PR) with diamond plate mounting box. Switch in cab (driver and officer side lights switched separately). Locate [#LOC].	$1,796
5390-0166	FRC LED900 Scene light (EA). Switch in cab (driver and officer side lights switched separately). Locate [#LOC].	$809
5390-0168	Hosebed light Trucklite model 44 LED (5). Locate equally spaced on upper front wall of hosebed . Switched with work light switch in cab.	$1,060
5390-0169	Deck light FireTech, model FT-WL3500-60 LED (PR). Switched with work light switch in cab. Location: [#LOC].	$749
5390-0170	Whelen M6 Linear Super LED scene light (EA). Switched in cab (lights mtd on the sides of apparatus to be switched separately). Locate [#LOC].	$578
5390-0171	Whelen M6 Linear Super LED hosebed lights (PR) with weatherproof connectors and smooth plate mounting boxes painted Durabak black. Locate equally spaced each side at the front area of hosebed. Switched with worklight switch in cab.	$1,368
5390-0172	Amdor Lumbar H2O LED strip lights for NFPA hose bed lighting. The lights to be mounted inside hose bed cover thru cover plate on outer skin. Light will illuminate the hose bed area thru slots in the inner skin.	$1,626
5390-0173	Federal Signal model 64LEDSCENE LED scene light (PR) with weatherproof connectors. Includes switch accessible to driver (driver and officer side lights switched separately). Locate [#LOC].	$1,006
5390-0175	Light Whelen Pioneer Plus model PFP1 with pedestal side mount. Switched with work light switch in cab. Location(s): [#LOC].	$2,956
5390-0176	Hose bed light ROM V4 LED 42-72" long. Locate forward area of hose bed up high. Switched with work light switch in cab.	$433
5390-0177	Crosslay light ROM V4 LED 42-72" long. Locate forward area of hose bed up high. Switched with work light switch in cab.	$433
5390-0178	Light Whelen PFBP6C LED. Locate above L2 on compartment top. Switched through ignition.	$475
5390-0179	Crosslay lights EON (4). Locate evenly spaced up high on back of cab to illuminate crosslays.	$458

5390-0180	Crosslay light Truck-Lite LED model 81380. Locate on the forward upper surface of the pump module over the speedlay module to light from above during hose loading operations. Switched with work light switch in cab.	$199
5390-0181	Whelen M6 series gradient Super LED scene lights (PR) with weatherproof connectors. To be used as cornering lights wired to turn signals and four way flashers. Location: [#LOC].	$1,438
5390-0182	Crosslay light Amdor H2O. Locate at the front body above crosslay. Switched with work light switch in cab.	$469
5390-0183	Crosslay light Truck-Lite LED model 81380. Locate on front of body up high. Switched with work light switch in cab.	$199
5390-0184	FireTech 8" 12V double stack mini brow light (PR). Includes switch in cab (driver and officer side facing lights switched separately). Location: [#LOC].	$1,960
5390-0185	Hose bed light Federal Signal 64LEDSCENE. Locate at the front area of hose bed. Switched with work light switch in cab. Includes diamond plate mounting box.	$599
5390-0186	FRC SPA900-Q70 Scene light (PR). Switch in cab (driver and officer side lights switched separately). Locate [#LOC].	$1,617
5390-0187	Whelen 900 series model 9SC0ENZR Super LED Opti-Scene light (1 EA) with weatherproof connector. Switch in cab (driver and officer side lights switched separately). Locate [#LOC].	$813
5390-0188	Diamond plate mounting boxes (4). For use with scene lights and/or warning lights. Locate on driver and officer side forward and rearward compartment tops outboard; boxes to be full depth of compartment top.	$849
5400-0003	Engine compartment light (EA).	$124
5400-0004	Incandescent pump panel light - additional (EA). Location: [#LOC].	$93
5400-0005	Pump panel LED light package with (2) Whelen strip lights per side pump panel. Not available on panels over 45" wide. Side mount only.	$778
5400-0006	Pump panel LED light package with (3) lights per side pump panel. Pump panels over 45" may require additional lights. Side mount only.	$1,118
5400-0007	LED pump panel light - additional (EA). Location: [#LOC].	$191
5400-0008	(1) pump panel light over the pump control area to be wired to come on when pump shift is placed in pump. (Side mount forward light noted, Top Mount is center light.)	$39
5400-0009	Pump panel LED light package - top mount. Includes (2) lights per side pump panel and (3) lights for top mount panel. Side pump panels over 45" wide may require additional lights. Top mount only.	$1,308
5400-0010	Incandescent pump compartment light (EA).	$133
5400-0011	LED pump compartment light (EA).	$359
5400-0020	Federal NightFighter light with internal pole. Locate [#LOC]. Switched on light head.	$1,246
5400-0021	Federal NightFighter Light with External Pole. Locate [#LOC]. Switched on light head.	$2,155
5400-0030	Fog Lights, Quartz Halogen (PR) [#COL] and located [#LOC].	$272
5400-0031	Pair of Cab Dome Large Lights mounted driver and officer side front. N/A on E-One Chassis. Required on Comm Chassis.	$73
5400-0032	Pair of Cab Dome Large Lights mounted driver and officer side Rear. N/A on E-One Chassis or two door commercial chassis. Required on Comm Chassis.	$73
5400-0033	Cab Dome Lts Red/White 4" incandescent. White light wired through door and light assembly mounted rocker switch. Red light through light assembly mounted rocker switch.	$558
5400-0034	Dome Lts Red 4" (Ea) [#LOC]. Includes assembly mounted rocker switch.	$133
5400-0035	Dome Lts White 4" incandescent. Includes assembly mounted rocker switch. Requires one for each cab door.	$151
5400-0037	Dome Lts Red/White Incandescent. Package includes two lights mounted in the front and two mounted in the rear of the cab. White light wire through door and light assembly mounted switch. Red light through light assembly mounted switch.	$536
5400-0038	Spotlights, 6" Unity (PR) cab post mount.	$439
5400-0039	Spotlight Specialty 2150 hand held located on officer's side of cab dash - hardwired.	$376
5400-0041	Spotlight, Federal Visibeam II Remote. If one is selected it will be located centered on cab roof mounted on a bracket. If two are selected, they will be located one each side of cab roof to rear of light bar.	$663
5400-0042	Map light, Sunnex [#LOC].	$321
5400-0043	Maplight-Little Lt 18" Flex [#LOC]. Includes on/off switch.	$217
5400-0047	Pump panel light package with (3) lights per side pump panel. Pump panels over 45" may require additional lights. Side mount only.	$628
5400-0048	Pump panel light package - top mount. Includes (2) lights per side pump panel and (3) lights for top mount panel. Top mount only.	$729
5400-0054	Spotlight Specialty 2150 hand held located on officer's side of cab dash w/12V receptacle.	$376
5400-0057	Dome lts red/white 4" LED (4). Lights to be located two front and two rear. White light wired through door and light assembly mounted rocker switch. Red light through light assembly mounted rocker switch.	$1,447
5400-0059	Optronics model QH-3000 handheld 12v spotlight. To be hardwired on officer's side of cab dash.	$146
5400-0060	Spotlight Specialty 2150 hand held located on driver's side 3 x 3 post - hardwired.	$376
5400-0061	Golight model 2049 remote control spotlight with black housing. If one is selected it will be located centered on cab roof on a pedestal to rear of light bar. If two are selected, they will be located one each side of cab roof to rear of light bar.	$828
5400-0062	Code 3 model GLB3200 remote control spotlight with black housing. If one is selected it will be located centered on cab roof on a pedistal to rear of lightbar. If two are selected, they will be located one each side of cab roof to rear of lightbar.	$1,183

5400-0064	Dome Lts Red/White 4" LED (5). Lights to be located two front and three rear. White light wired through door and light assembly mounted rocker switch. Red light through light assembly mounted rocker switch.	$1,806
5400-0065	Map light, Littlite 18" flexible LED. Location: [#LOC].	$249
5400-0068	Pump panel LED light package with (3) Whelen 500 lights per side pump panel. Center light on each side to be wired through pump engage. Side mount only.	$1,211
5400-0069	Map light Sunnex HS 761-00 with frosted lens. Location: Officer overhead console inboard of AC vent.	$281
5400-0070	Whelen 700 Series cornering lights (PR) located on ends of bumper gravel shield ahead of warning lights. Lights to have 8-32 degree internal optics and chrome flange. Includes cornering light relay circuits.	$719
5400-0071	Spotlight, Collins CL-12-M hand held located on officer's side of cab dash, hardwired. Includes Handlelok 1004 bracket.	$453
5400-0074	Pump panel LED light package. Includes (2) Whln LED strip lights driver side above upper panel, (2) Whln LED strip lights officer side mid-way up on upper hinged panel, (2) 4" grommet mount lights on driver side front compt face, (1) in line with side discharges and (1) at upper pump panel split, and (1) 4" grommet mount light on officer side front compt face down low.	$1,966
5400-0075	Dome Lts Red/White LED/Incandescent. Package includes two red/white incandescent lts mtd in the frt of the cab and two 4" red/white LED lts mtd in the rear of the cab. White lt wired through door and lt assy mounted switch. Red lt wired through lt assy mounted switch.	$992
5400-0076	Golight model 2020 permanent spotlight. Location: Centered top of lightbar.	$656
5400-0080	FRC Night Master light with external push-up pole. Locate [#LOC]. Switched on light head.	$1,192
5400-0081	Golight model 2067 remote control spot light with white housing. If one is selected it will be located centered on cab roof on a pedestal to rear of light bar. If two are selected, they will be located one each side of cab roof to rear of light bar.	$828
5400-0082	Maplight-Little Lt 18" Flex [#LOC]. Includes dimmer switch.	$217
5400-0083	Map light Sunnex HS 761-20 with red lens and dimmer switch. Location: Officer overhead console inboard of AC vent.	$281
5400-0084	SpotLt-Fed VisibeamII Remote. If one is select it will be located center on forward vista roof. If two are selected, they will be located one each side front corners of vista cab roof.	$663
5400-0085	Enclose pump panel LED light package with (3) lights per side pump panel. Side mount only.	$1,490
5400-0086	Spotlight Specialty 2150 hand held located on font of map box - hardwired.	$376
5400-0087	Map light Sunnex model HS741-27 with red lens. Location: [#LOC].	$300
5400-0088	LED Amdor Luma-Bar pump panel lighting. (1) each side.	$1,185
5400-0089	Federal Signal Ultrastar Green LED w/ clear lens. Locate on L1 on compt top. Includes switch on pump panel labeled "Hydrant".	$656
5400-0090	Spotlight Specialty 2150 hand held located on officer's side 3 x 3 post - hardwired.	$376
5400-0091	Zico cornering light (PR) with polished stainless steel housing model #ZQL-SS-H7614 wired through turn signals. Includes cornering light relay. Lights to be directed downward. Location: (1) each side of gravel shield (forward).	$985
5400-0092	Weldon pump panel LED light package with (3) lights per side pump panel. Pump panels over 45" may require additional lights. Side mount only.	$911
5400-0093	Golight model 2049 remote control spotlight with black housing (PR) located one each side of cab roof to rear of lightbar. Driver light control located on driver dash switch panel. Officer light control located on officer dash switch panel. (Quest cab only)	$1,655
5400-0096	Pump panel light package - top mount. Includes (2) lights per side pump panel and (2) lights for top mount panel.	$584
5400-0097	Maplight-Havis Shield 12" Flex LED. Location: [#LOC].	$242
5400-0098	Pump panel LED light package with (3) Whelen 4"round lights per side pump panel. Pump panels over 45" may require additional lights. Side mount only.	$1,118
5400-0099	SM Pump module panel light package. Includes (2) incandescent lights per side of the module (main panel in body compartmetn will have lighting provided seperately).	$419
5400-0100	Weldon side mount pump panel light package. Includes (2) LED lights per side of the module (main panel in body compartment will have lighting provided seperately).	$455
5400-0104	Spotlight Specialty 2150 hand held located on officer's side, side facing engine cover offset forward below cab dash - hardwired.	$376
5400-0105	Weldon pump panel LED lighting package with (3) lights for pump operator panel (with shield) and (3) lights for rear pump panel. Rear Mount only.	$450
5400-0106	Pump panel incandescent lighting package with (3) lights for pump operator panel (with shield) and (3) lights for rear pump panel. Rear Mount only.	$628
5400-0107	Weldon pump panel LED light package - top mount. Includes (2) lights per side pump panel and (3) lights for top mount panel. Side pump panels over 45" wide may require additional lights. Top mount only.	$1,028
5400-0108	Cab Dome Large Lights mounted centered over front seat. N/A on E-0ne Chassis. Required on Comm Chassis.	$38
5400-0109	Weldon LED pump panel light - additional (EA). Location: [#LOC].	$142
5400-0111	Whelen 600 series Super LED blue. Locate driver side rear compartment face below upper level warning. Includes switch on pump panel labeled "HYDRANT".	$498
5400-0112	Backing light (PR) Innovative LIghting with polished housing model #580-0200-1, light bulb is a halogen MR16. Location: [#LOC].	$352
5400-0119	Whelen green LIN6 green battery indicator light. Location: driver side behind cab grille. Light will be interlocked through park brake.	$296
5400-0125	SpotLt-Fed VisibeamII Remote. Officer side of cab roof to rear of lightbar mounted on a bracket.	$663

5400-0126	Side mount pump module LED lighting. Includes (3) pump panel lights - (2) driver side and (1) officer side.	$362
5400-0127	Top mount pump module LED lighting. Includes (3) lights located along the upper top mount control panel, (2) side pump panel lights - (1) driver side and (1) officer side and (2) top mount walkway lights.	$829
5400-0128	Weldon crosslay LED light package with (3) lights. Located on forward wall of light tower shield.	$456
5400-0129	Spotlight Collins CL-12-M hand held located on officer's side of cab dash - hardwired. Includes Handlelok 1004 bracket, shipped loose.	$453
5400-0130	Spotlight Optronics Blue Eye model KB4003 hand held located on officer's side of cab dash - hardwired.	$225
5400-0131	Pump panel LED light package Amdor Luma Bar H2O. Includes (1) light per side pump panel (2 driver if split panel). Side mount only.	$912
5400-0132	Incandescent pump panel and runningboard lighting package. Includes (3) lights shield mounted on the driver side and (1) 4" recessed light mounted on the officer side compartment face.	$628
5400-0133	Golight model 2067 remote control spotlight with white housing. Locate (1) each side cab corner outboard of forward facing lightbar without pedestal. Requires additional side facing warning lights to meet NFPA.	$828
5400-0137	Pump panel LED light package for side mount eMAX. Includes (6) TecNiq EON lights with S/S housings, located (3) each side above lower side intake/discharge panels. Includes S/S light shields. SM eMAX only.	$372
5400-0139	Pump panel LED light package for top mount. Includes (12) TecNiq EON lights with S/S housings, (6) for TM panel and (3) each side for lower side intake / discharge panels. Includes S/S light shields for side panels.	$664
5400-0145	Pair of Cab Dome Large Lights mounted driver (clear) and officer (red) side front. N/A on E-One Chassis. Required on Comm Chassis.	$73
5400-0148	Maplight-Little Lt 12" Flex LED. Location: [#LOC].	$249
5400-0149	Pump panel Amdor H2O LED light package with (3) lights per side pump panel. Pump panels over 45" may require additional lights. Side mount only.	$919
5400-0151	Pump compartment light EON LED. Wired to work light.	$214
5400-0154	Spotlight Specialty 2150 hand held located on center of cab dash with plug-in connector.	$376
5400-0155	Cab Dome Large Light (PR). (1) mounted centered centered in the front and rear headliners. N/A on E-0ne Chassis. Required on Comm Chassis.	$73
5400-0156	Spotlight Collins CL-12-M handheld. Light to be hardwired and bracket (Handlelok 1004) to be mounted to the rear of the center console.	$453
5400-0157	Spotlight Whelen PAR46 Super LED hand held located on officer's side of cab dash - hardwired. Mounted to not obstruct driver view of passenger corner mounted mirror (if equipped).	$617
5400-0158	Spotlights, 6" Unity LED (EA) cab post mount. Location: Officer side cab A post.	$512
5400-0159	Optronics model QH-100 handheld 12v spotlight. To be hardwired on officer's side of cab dash.	$146
5400-0164	Spotlights, 6" Unity LED (PR) cab post mount.	$1,024
5400-0165	Pump compartment light EON LED. Light shall be switched from the cab dash with the work light switch.	$214
5400-0166	Fog lights (PR) Perlux 500 series model 05001-5 clear fog Light located [#LOC].	$589
5400-0167	(1) pump panel light over the pump control area to be wired to come on when pump shift is placed in pump. (Rearward light.)	$39
5400-0168	Whelen LED pump compartment light (EA).	$273
5400-0171	Compartment light EON LED IPOS. Location of light(s): [#LOC].	$140
5400-0172	Pump panel LED light package for side mount. Includes (3) Tecniq EON lights with S/S housings. Includes S/S light shield. Rear mount only.	$297
5400-0173	Spotlight Whelen PAR46 Super LED hand held located on officer's side of cab dash with plug-in connector.	$617
5400-0174	Pump panel light package with (3) On Scene Solutions lights per side pump panel. Pump panels over 45" may require additional lights. Side mount only.	$1,061
5400-0175	Compartment light EON blue LED. Switched with work light switch in cab. Location of light: [#LOC].	$214
5400-0180	Spotlight, Collins CL-12-M hand held located on officer's side of cab dash, hardwired. Includes Handlelok 1004 bracket which shall be mounted at time of final inspection.	$453
5400-0181	Pump panel LED light package for side mount. Includes (6) Tecniq EON lights with S/S housings located (3) ea side. The center light shall be green as wired to activate when pump shift is placed in pump. Includes S/S light shields. Requires separate pump panel light wiring instruction.	$372
5400-0182	(1) pump panel light (center light) over the pump control area to be wired to come on when pump shift is placed in pump.	$39
5400-0183	Side mount pump module LED lighting. Includes (3) pump panel lights - (2) driver side and (1) officer side.	$440
5400-0184	Top mount pump module LED lighting. Includes (3) lights located along the upper top mount control panel, (2) side pump panel lights - (1) driver side and (1) officer side and (2) top mount walkway lights.	$624
5400-0185	LED pump compartment light (EA).	$66
5400-0186	Interior rescue module dome light Red/White LED (PKG). Package includes (4) TecNiq model E06-WS0R-1 red/white LED lights evenly spaced on ceiling. Includes (1) switch for red and (1) for white lights on interior wall.	$790
5400-0187	Map light Sunnex HS 761-00 with frosted lens. Location: Driver and officer overhead console inboard.	$281

5400-0188	Golight model 30201 remote control HID spot light with white housing. If one is selected it will be located centered on cab roof on a pedestal to rear of light bar. If two are selected, they will be located one each side of cab roof to rear of light bar.	$901
5400-0189	Golight model 2020 permanent spotlight with white housing. Centered on forward cab roof.	$828
5400-0190	Weldon/EON pump panel LED light package with (1) Weldon, (2) EON driver pump panel and (3) Weldon officer pump panel. Pump panels over 45" may require additional lights. Side mount only.	$911
5400-0191	Class 1 provided / E-ONE installed pump panel and ground lights for pump module. Includes (1) 18" LED strip light, (2) 24" LED strip light and (2) ground lights.	$808
5400-0192	Amdor H2O pump panel LED light package - top mount. Includes (2) lights per side pump panel and (3) lights for top mount panel. Side pump panels over 45" wide may require additional lights. Top mount only.	$1,065
5400-0194	(1) pump panel light (center light) over each side mount pump control area to be wired to come on when pump shift is placed in pump.	$79
5400-0196	TecNiq LED backing lights (PR) model E960. Location: [#LOC].	$427
5400-0198	Map light, Sunnex LED model SL9-220. Location: [#LOC].	$693
5400-0199	Pump panel light additional EON LED. Locate (2) driver side up high and (2) officer side up high.	$115
5400-0200	Spotlights, 6" Unity LED (PR) cab post mount. Includes black housings.	$1,024
5450-0003	Quartz light KwikRaze 500W/110V model KR-905-I with internal telepole. Location(s): [#LOC]	$670
5450-0004	Quartz light KwikRaze 500W/110V model KR-SB-505-W/2-I with external telepole. Location(s): [#LOC]	$1,053
5450-0005	Quartz light Kwik Raze 500W/110V portable. Location(s): [#LOC].	$427
5450-0006	Quartz light KwikRaze 500W/110V model KR-SB-805-TM-I with external mount tripod telepole. Requires 110V receptacle. Location(s): [#LOC]	$1,562
5450-0007	Quartz light Kwik Raze 500W/110V with recess mount. Location(s): [#LOC].	$972
5450-0008	Quartz light Fire Research Focus 750W/110V model FCA510E-S75-SW with internal pull-up pole. Location(s): [#LOC].	$1,484
5450-0009	Quartz light Fire Research Focus 750W/110V model FCA530-S75-SR-SW with side mount push-up pole. Location(s): [#LOC].	$1,569
5450-0010	Quartz light Fire Research Focus 1000W/240V model FCA200-M12 with recess mount. Location(s): [#LOC].	$834
5450-0011	Quartz light Fire Research Optimum 900W/240V model OPA200-R90 with recess mount. Location(s): [#LOC].	$1,090
5450-0012	Quartz light Fire Research Focus 750W/110V model FCA570-S75 without pole. Location(s): [#LOC].	$1,158
5450-0015	Quartz light Fire Research Focus 750W/120V model FCA600-S75-ON-FC603 with 40" telescopic tripod pole. Location(s): [#LOC].	$1,588
5450-0016	Quartz light Fire Research Focus 750W/110V model FCA540-S75-SW with side mount pull up pole. Location(s): [#LOC].	$1,542
5450-0019	Quartz light Fire Research Focus 750W/110V model FCA802-S75-01 with brow mount (EA). Location(s): [#LOC].	$898
5450-0020	Quartz light Fire Research Focus 1500W/240V model FCA600-M15-ON-FC603 with telescopic tripod pole. Location(s): [#LOC].	$1,673
5450-0021	Quartz light Fire Research Optimum 750W/110V model OPA570-S75 without pole. Location(s): [#LOC].	$1,227
5450-0022	Quartz light Fire Research Optimum 150W/12V model OPA802-HD15-01 with brow mount (EA). Includes switch accessible to driver. Location(s): [#LOC].	$1,513
5450-0023	Quartz light Fire Research Optimum 150W/12V model OPA510E-HD15-SW with internal pole. Includes switch accessible to driver. Location(s): [#LOC].	$1,812
5450-0024	Quartz light Fire Research Optimum 750W/110V model OPA510E-S75-SW with internal pull up pole. Location(s): [#LOC].	$1,530
5450-0028	Quartz light Fire Research Optimum 750W/110V model OPA530-S75-SR-SW with side mount external pole. Location(s): [#LOC].	$1,613
5450-0030	Quartz light Fire Research Optimum 750W/110V model OPA600-S75-ON-OP603 with 40" telescopic tripod pole. Location(s): [#LOC].	$1,604
5450-0031	Quartz light Fire Research Optimum 750W/110V model OPA802-S75-01 with brow mount (EA). Location(s): [#LOC].	$960
5450-0032	Quartz light Fire Research Optimum 900W/240V model OPA600-R90-ON-OP603 with telescopic tripod pole. Location(s): [#LOC]	$1,705
5450-0033	Quartz light Fire Research Optimum 150W/12V model OPA530-HD15-SR-SW with side mount external pole. Includes switch accessible to driver. Location(s): [#LOC].	$2,023
5450-0034	Quartz light MagnaFire 900W/240V model KR-739-HD with portable base. Requires 220V receptacle. Location(s): [#LOC]	$626
5450-0035	Quartz light MagnaFire 900W/240V model KR-1939 with recess mount. Location(s): [#LOC].	$864
5450-0036	Quartz light MagnaFire 900W/240V model KR-SB-639 without pole. Location(s): [#LOC].	$1,002
5450-0037	Quartz light MagnaFire 900W/240V model KR-939-I with internal pole. Location(s): [#LOC].	$952
5450-0038	Quartz light MagnaFire 900W/240V model KR-SB-539-W/2-I with external pole. Location(s): [#LOC].	$1,246
5450-0039	Quartz light MagnaFire 900W/240V model KR-SB-839-TM-I with external mount tripod telepole. Requires 220 volt receptacle. Location(s): [#LOC].	$1,355
5450-0040	Quartz light MagnaFire 900W/240V model KR-1339 with low profile mount. Location(s): [#LOC]	$990
5450-0041	Quartz light MagnaFire 900W/240V model KR-1539 with cab brow mount (EA). Not available in front center due to DOT lights. Location(s): [#LOC].	$878

5450-0045	Quartz light MagnaFire 750W/120V model KR-736-HD with portable base. Requires 110V receptacle. Location(s): [#LOC]	$577
5450-0046	Quartz light MagnaFire 750W/120V model KR-1936 with recess mount. Location(s): [#LOC].	$897
5450-0047	Quartz light MagnaFire 750W/120V model KR-SB-636 without pole. Location(s): [#LOC].	$1,037
5450-0048	Quartz light MagnaFire 750W/120V model KR-936-I with internal pole. Location(s): [#LOC].	$1,028
5450-0049	Quartz light MagnaFire 750W/120V model KR-SB-536-W/2-I with external pole. Location(s): [#LOC].	$1,307
5450-0050	Quartz light MagnaFire 750W/120V model KR-SB-836-TM-I with external mount tripod telepole. Requires 110V receptacle. Location(s): [#LOC].	$1,505
5450-0051	Quartz light MagnaFire 750W/120V model KR-1336 with low profile mount. Location(s): [#LOC]	$923
5450-0052	Quartz light MagnaFire 750W/120V model KR-1536 with cab brow mount (EA). Location(s): [#LOC].	$815
5450-0056	Quartz light KwikRaze 1500W/220V model KR-SB-815-TM-I with external mount tripod telepole. Requires 220V receptacle. Location(s): [#LOC]	$1,619
5450-0058	Quartz light Fire Research Optimum 1500W/240V model OPA510E-M15-SW with internal pull-up pole. Location(s): [#LOC].	$1,634
5450-0059	Quartz light Fire Research Optimum 750W/110V portable model OPA700-S75-OP703. Location(s): [#LOC].	$817
5450-0060	Quartz light Fire Research Focus 750W/120V model FCA300U-S75 with brow mount. Location: Center of cab brow.	$898
5450-0063	Quartz light Fire Research Optimum 900W/240V model OPA530-R90-SR-SW with bottom raise pole. Location(s): [#LOC].	$1,613
5450-0064	Quartz light Fire Research Focus 500W/120V model FCA200-S50 with recess mount. Location(s): [#LOC].	$914
5450-0065	Quartz light Fire Research Optimum 1000W/240V model OPA656-M12-ON-OP603 with telescopic tripod pole. Location(s): [#LOC]	$1,705
5450-0066	Quartz light Fire Research Optimum 1500W/240V model OPA512-M15-SW with internal thru roof push up pole. Location(s): [#LOC]	$1,703
5450-0067	Quartz light Fire Research Focus 500W/110V model FCA802-S50-01 with brow mount (EA). Light head and mount to be powder coated black. Location(s): [#LOC]	$874
5450-0069	Quartz light MagnaFire 5000 500W/120V model KR-2555 with cab brow mount (EA). Location(s): [#LOC]. Not available in front center due to DOT lights.	$721
5450-0070	Quartz light MagnaFire 5000 500W/120V model KR-SB-555-W/2-I with external pole. Location(s): [#LOC].	$1,132
5450-0071	Quartz light Fire Research Optimum 750W/110V model OPA200-S75 with recess mount. Location(s): [#LOC].	$976
5450-0072	Quartz light Fire Research Optimum 1500W/240V model OPA100 with internal pole. Location(s): [#LOC].	$1,502
5450-0073	Quartz light Fire Research Focus 750W/120V model FCA300U-S75 with brow mount. Light head and mount to be powder coated black. Location: Center of cab brow.	$944
5450-0074	Quartz light timer (ea).	$136
5450-0075	Quartz light Fire Research Optimum 900W/240V model OPA510E-R90-SW with top raise pole. Location(s): [#LOC].	$1,613
5450-0076	Quartz light MagnaFire 5000 750W/120V model KR-3556 with front cab brow mount (EA). Quest cabs only. Location(s): [#LOC].	$815
5450-0077	Quartz light MagnaFire 5000 750W/120V model KR-3656 with side cab brow mount (EA). Quest cabs only. Location(s): [#LOC]	$815
5450-0078	Quartz light Fire Research Focus 750W/110V model FCA802-S75-01 with brow mount (EA). Light head and mount to be powder coated black. Location(s): [#LOC]	$944
5450-0079	Quartz light MagnaFire 750W/120V model KR-1536 with cab brow mount (EA). Light head and mount to be powder coated black. Location(s): [#LOC].	$863
5450-0080	Quartz light Fire Research Focus 750W/110V model FCA830-S75 with brow mount (EA). Quest and CII LTH aerial cabs only. Location(s): [#LOC].	$898
5450-0081	Quartz light Fire Research Optimum 750W/110V model OPA656-S75-ON-OP603 with 28" telescopic tripod pole. Location(s): [#LOC]	$1,604
5450-0082	Quartz light Fire Research Focus 750W/110V model FCA656-S75-ON-FC603 with 28" telescopic tripod pole. Location(s): [#LOC].	$1,588
5450-0083	Quartz light Fire Research Focus 1500W/240V model FCA530-M15-SR-SW with side mount push up pole. Location(s): [#LOC].	$1,575
5450-0084	Quartz light Fire Research Focus 150W/12V model FCA510E-D15-SW with internal pole. Includes switch accessible to driver. Location(s): [#LOC].	$1,128
5450-0089	Quartz light MagnaFire 900W/240V model KR-SB-539-W/2-I with external pole. Light head to be powder coated black. Location(s): [#LOC].	$1,293
5450-0091	Quartz light Fire Research Optimum 900W/240V model OPA200-R90 with recess mount. Location(s): [#LOC]. Includes plate stand-off box to allow lights to recess without intruding into hosebed area.	$1,202
5450-0092	Quartz light Fire Research Focus 750W/110V model FCA530-S75-SR-SW with side mount push-up pole. Light head and mounts to be powder coated black. Location(s): [#LOC].	$1,616
5450-0094	Quartz light Extenda-Lite 750W/110V model E-4750-EX-TL-UI-EX. Location(s): [#LOC].	$854
5450-0095	Quartz light Fire Research Focus 150W/12V model FCA300U-D15 with brow mount. Includes switch accessible to driver. Location: center of cab brow.	$1,035
5450-0096	Quartz light Fire Research Optimum 1000W/110V portable model OPA700-M10-OP703. Location(s): [#LOC].	$932

5450-0098	Quartz light Fire Research Optimum 1500W/240V model OPA600-M15-ON-OP603 with telescopic tripod pole. Location(s): [#LOC]	$1,773
5450-0099	Quartz light Fire Research Optimum 1500W/240V model OPA200-M15 with recess mount. Location(s):[#LOC].	$995
5450-0102	Quartz light Fire Research Focus 1000W/120V model FCA530-M10-SR-SW-ON with external push up pole. Location(s): [#LOC].	$1,673
5450-0114	Quartz light Fire Research Focus 1000W/120V model FCA200-M10 with recess mount. Location(s): [#LOC].	$834
5450-0115	Light Whelen 12 volt Pioneer Plus model PFP1 with brow mount (EA). Includes switch in cab (driver and officer side facing lights switched separately). Location(s): [#LOC].	$1,543
5450-0116	Quartz light Fire Research Focus 500W/110V model FCA600-S50-ON-FC603 with 40" telescopic tripod pole. Location(s): [#LOC].	$1,588
5450-0117	Light Whelen Pioneer Plus model PFP2 12V with brow mount and PFLASH (EA). Includes switch in cab (driver and officer side facing lights switched separately). Location(s): [#LOC].	$2,358
5450-0118	Quartz light Fire Research Focus 1000W/240V model FCA802-M12-01 with brow mount (EA). Location(s): [#LOC].	$952
5450-0121	Quartz light Fire Research Focus 1500W/240V model FCA530-M15-SR-SW-ON with external push up pole. Location(s): [#LOC].	$1,590
5450-0122	Light Whelen Pioneer Plus model PFP2 12V with brow mount (EA). Includes switch in cab accessible to driver (driver and officer side facing lights switched separately). Location(s): [#LOC].	$2,242
5450-0123	Light Whelen Pioneer Plus LED model PFP2 12V with PBAPEDD pedestal mount. Includes switch in cab (side facing lights switched separately). Location(s): [#LOC].	$2,218
5450-0124	Light Whelen Pioneer model PFA2 with brow mount (EA). Includes switch in cab (driver and officer side facing lights switched separately). Location(s): [#LOC].	$1,802
5450-0125	Quartz light MagnaFire 5000 750W/120V model KR-2556 with cab brow mount (EA). Location(s): [#LOC].	$815
5450-0126	Quartz light Fire Research Focus 750W/110V model FCA642-S75-ON-FC6F3 with 16.625" telescopic tripod pole. Location(s): [#LOC].	$1,588
5450-0127	Quartz light Fire Research Focus 150W/12V model FCA802-H15-01 with brow mount (EA). Includes switch accessible to driver. Location(s): [#LOC]	$1,465
5450-0128	FRC quartz light head and bracket to be powdered coated job color (EA). Requires paint spray out sent to FRC for color matching.	$182
5450-0130	Quartz light MagnaFire 750W/120V model KR-2556 with cab brow mount (EA). Location(s): [#LOC]. Not available in front center due to DOT lights.	$815
5450-0134	Light Whelen Pioneer Plus model PFP2 12V with brow mount powder coated black (EA). Includes switch in cab (driver and officer side facing lights switched separately). Location(s): [#LOC].	$2,242
5450-0135	Quartz light Fire Research Focus 150W/12V model FCA802-H15-01 with brow mount (EA). Light head and mount to be powder coated black. Includes switch accessible to driver. Location(s): [#LOC].	$1,507
5450-0136	Light Whelen Pioneer Plus model PCP2 flood/spot with brow mount (EA). Includes switch in cab (driver and officer side facing lights switched separately). Location(s): [#LOC].	$2,261
5450-0138	Light Whelen Pioneer Plus model PFP2AC with Quest brow mount (EA). Location(s): [#LOC].	$2,195
5450-0139	Light Whelen Pioneer Plus model PFP1AC 120V with recess mount. Location(s): [#LOC].	$1,371
5450-0140	Light Whelen Pioneer model PFA1 with pedistal mount. Includes switch in cab (driver and officer side facing lights switched separately). Location(s): [#LOC].	$1,479
5450-0141	Quartz light Fire Research Optimum 150W/12V model OPA230-H15 with recess mount. Includes switch in cab console. Location(s): [#LOC].	$1,543
5450-0143	Light Whelen 12V Pioneer model PFP2 with PBA203 recess mount. Includes switch accessible to driver (side facing lights switched separately). Location: [#LOC].	$2,132
5450-0144	Fire Research Evolution 12V LED scene light model FCA530-V15-SW-H with external push-up pole. Includes switch in cab accessible to driver. Location: [#LOC].	$2,273
5450-0145	Light Whelen Pioneer Plus model PFP1 12V with recess mount. Includes switch accessible to driver (side facing lights switched separately). Location(s): [#LOC].	$1,324
5450-0153	Light Whelen Pioneer Plus model PFP1 with bail mount. Includes switch in cab accessible to driver (side facing lights switched seperately). Location(s): [#LOC].	$1,324
5450-0154	Fire Research Evolution 12V LED scene light model FCA510E-V15-SW with internal pull-up pole. Includes switch accessible to driver. Location: [#LOC].	$2,273
5450-0155	Fire Research Evolution 12V LED scene light model FCA802-V15 with brow mount (EA). Includes switch accessible to driver (driver and officer side facing lights switched separately). Location: [#LOC].	$1,955
5450-0156	Quartz light Fire Research Evolution 12V LED model FCA300U-V15 with brow mount. Includes switch accessible to driver. Location: center of cab brow.	$1,887
5450-0158	Light Whelen Pioneer model PFP2AC 120V with external bottom raise pole mount (ROM model KR-SB-5PFP2AC-W/2-I). Location(s): driver and officer side back of cab.	$2,302
5450-0161	Light Whelen 12V Pioneer model PCP2 with internal push-up pole mount (Havis KR-SB-4PCP2-S-I). Includes switch on light head. Location(s): [#LOC].	$2,295
5450-0162	Light Whelen Pioneer Plus model PFP2AC 120V with brow mount (EA). Location(s): [#LOC].	$2,195
5450-0166	Light Whelen Pioneer Plus model PFP2AC 120V with recess mount. Location(s): [#LOC].	$2,546
5450-0167	Light Whelen Pioneer Plus model PFP2 12V with Quest brow mount (EA). Includes switch in cab accessible to driver (driver and officer side facing lights switched separately). Location(s): [#LOC].	$2,242

5450-0168	Floodlight Whelen/ROM model KR-SB-8PFP2-SL-I-TM with external mount tripod telepole. Location(s): [#LOC].	$2,760
5450-0169	Quartz light MagnaFire 750W/120V model KR-SB-836-TM-SL-I with external mount tripod telepole. Requires 110V receptacle. Location(s): [#LOC].	$1,505
5450-0170	Fire Research Evolution 12V LED model FCA210-V12 with recess mount. Includes switch in cab accessible to driver. Location(s): [#LOC].	$1,803
5450-0171	Light Whelen Pioneer model PFA1 with PBA103 recess mount. Includes switch accessible to driver. Location: [#LOC].	$1,324
5450-0172	Light Whelen Pioneer Plus model PFP1 12V with vertical bail mount. Includes switch in cab accessible to driver (side facing lights switched seperately). Location(s): [#LOC].	$1,324
5450-0174	Light Whelen Pioneer Plus model PFP1AC 120V with recess mount. Location(s): [#LOC].	$1,371
5450-0175	Light Whelen Pioneer Plus model PFP2AC 120V with brow mount powder coated black (EA). Location(s): [#LOC].	$2,195
5450-0176	Light Whelen Pioneer Plus LED model PFP2 12V with pedestal mount powder coated black. Includes switch in cab (side facing lights switched separately). Location(s): [#LOC].	$2,218
5450-0179	Light Whelen Pioneer model PFA2 with brow mount powder coated FLNA3225E-1 (EA). Includes switch in cab (driver and officer side facing lights switched separately). Location(s): [#LOC].	$1,862
5450-0181	Light Fire Research Spectra 12V LED model SPA510E-Q20-SW with internal pull-up pole. Includes switch accessible to driver. Location(s): [#LOC].	$2,719
5450-0183	Fire Research Spectra 12V LED scene light model SPA530E-Q20-SW-H with external push-up pole. Includes switch in cab accessible to driver. Location: [#LOC].	$2,718
5450-0184	Light Whelen Pioneer model PFP2AC 120V powder coated FLNA3225E-1 with external bottom raise pole mount painted FLNA3225E-1 (ROM model KR-SB-5PFP2AC-W/2-I). Location(s): [#LOC].	$2,402
5450-0185	Light Whelen Pioneer model PFA1 with brow mount (EA). Includes switch in cab (driver and officer side facing lights switched separately). Location(s): [#LOC].	$1,171
5450-0186	Light Whelen Pioneer model PFA1 with vertical bail mount. Includes switch in cab (driver and officer side facing lights switched separately). Location(s): [#LOC].	$1,090
5450-0188	Quartz light MagnaFire 5000 500W/120V model KR-SB-555-W/2-I-SL with (special length) external pole. Location(s): [#LOC].	$1,132
5450-0189	Light Whelen Pioneer Plus model PFP1AC 120V with brow mount (EA). Location(s): [#LOC].	$1,562
5450-0190	Fire Research Spectra 12V LED model SPA260-Q15 with surface mount. Includes switch accessible to driver. Location: [#LOC].	$1,830
5450-0191	Light Fire Research Spectra 120V LED model SPA600-K20-ON-SPA603 with 40" telescopic tripod pole. Location(s): :[#LOC].	$3,135
5450-0192	Light Fire Research Spectra 120V LED model SPA830-K20 with universal brow mount (EA). Location: [#LOC].	$2,374
5450-0193	Light Fire Research Spectra LED 110V model SPA510-K20 with internal pull-up pole. Location(s): [#LOC].	$2,427
5450-0194	Light Whelen Pioneer model PCP2 with PBA203 recess mount. Includes switch in cab accessible to driver (driver and officer side facing lights switched separately). Location: [#LOC].	$2,174
5450-0195	Whelen Micro Pioneer Series Super LED Work/Scene Light Model MPR15W with 15 degree recess mount. Includes switch accessible to driver (side facing lights switched seperately). Location: [#LOC].	$719
5450-0196	Brow light brackets (not housing) shall be painted FLNA 10219. This shall include forward, rear and side facing if so equipped.	$171
5450-0197	Light Whelen Pioneer model PFP2 12V powder coated FLNA3225E-1 red with internal top raise pole mount (ROM model KR-9PFP2-S). Includes switch on light head. Location: [#LOC].	$2,094
5450-0198	Light Whelen Pioneer Plus model PFP2 12V with brow mount powder coated FLNA3225E-1 red (EA). Includes switch in cab accessible to driver (driver and officer side facing lights switched separately). Location(s): [#LOC].	$2,338
5450-0199	Light Whelen Pioneer Plus model PFP1 12V with vertical bail mount powder coated FLNA3225E-1 red. Includes switch in cab accessible to driver (side facing lights switched seperately). Location(s): [#LOC].	$1,420
5450-0200	Fire Research Spectra 120V LED scene light model SPA530-K20-SW-H with external push-up pole. Location: [#LOC].	$2,718
5450-0201	Light Fire Research Spectra LED 12V model SPA570-Q20 without pole. Includes switch accessible to driver (driver and officer side facing lights switched seperately). Location(s): [#LOC].	$2,513
5450-0202	Fire Research Spectra 120V LED model SPA260-K15 with surface mount. Location: [#LOC].	$2,213
5450-0204	Light Whelen Micro Pioneer Plus model MPBW with bail mount. Includes switch in cab accessible to driver (side facing lights switched separately). Location: [#LOC].	$723
5450-0207	Light Whelen Pioneer Plus LED model PFP2 120V with pedestal mount powder coated black. Location(s): [#LOC].	$2,385
5450-0208	Fire Research Spectra 12V LED model SPA802-Q20-02 with brow mount (EA). Includes switch accessible to driver. Location: [#LOC].	$2,374
5450-0209	Fire Research Spectra 12V LED model SPA802-Q20-02 with brow mount, powder coated black (EA). Includes switch accessible to driver. Location: [#LOC].	$2,423
5450-0210	Light Fire Research Spectra LED 240V model SPA570-J20 without pole. Location(s): [#LOC].	$2,513
5450-0211	Light Fire Research Spectra 240V LED model SPA512-J20-SW with internal thru roof push up pole. Includes switch accessible to driver. Location(s): [#LOC].	$2,893
5450-0212	Quartz light Fire Research Focus 1500W/240V model FCA570-M15 without pole. Location(s): [#LOC].	$1,263

5450-0214	Light Whelen Pioneer Plus model PFP1 12V powder coated black with vertical bail mount. Includes switch in cab accessible to driver (side facing lights switched seperately). Location(s): driver and officer side rear of body up high.	$1,324
5450-0215	Light Whelen 12V Pioneer model PFP2 powder coated black with PBA203 recess mount. Includes switch accessible to driver (side facing lights switched separately). Location: driver and officer side centrally located in center area recessed into roof top compartment raise.	$2,132
5450-0216	Quartz light Fire Research Spectra 120V LED model SPA802-K20-02 with brow mount (EA). Location: [#LOC].	$2,374
5450-0218	Fire Research Evolution 12V LED model FCA210-V12 with recess mount powder coated black. Includes switch in cab accessible to driver. Location(s):[#LOC].	$1,845
5450-0220	Quartz light MagnaFire 750W/120V model KR-1936 with recess mount in diamond plate mounting box. Location(s): [#LOC].	$1,064
5450-0221	Quartz light MagnaFire 5000 750W/120V model KR-2556 with cab brow mount (EA). Light head to be powder coated black. Location(s): [#LOC].	$892
5450-0222	Quartz light MagnaFire 750W/120V model KR-1336 with low profile mount. Light head to be powder coated black. Location(s): [#LOC]	$1,010
5450-0223	Quartz light MagnaFire 750W/120V model KR-SB-536-W/2-I with external pole. Light head to be powder coated black. Location(s): [#LOC].	$1,356
5450-0224	Quartz light Fire Research Focus 1000W/120V model FCA600-M10-ON-6F3 with telescopic tripod pole. Location(s): [#LOC].	$1,717
5450-0226	Light Whelen Pioneer Plus model PFP1AC 120V with vertical bail mount. Location(s): [#LOC].	$1,504
5450-0227	Light Whelen Pioneer Plus LED model PFP1 12V with PBAPEDD pedestal mount. Includes switch in cab (side facing lights switched separately). Location(s): [#LOC].	$1,580
5450-0230	Floodlight Whelen/ROM model KR-SB-8PFP2AC-I-TM with external mount tripod telepole. Pole length required shall be determined upon mounted location. Requires 110V receptacle. Location(s): [#LOC].	$2,760
5450-0231	Light Whelen Pioneer Plus LED model PFP2 12V with PBAPEDD pedestal mount powder coated black housing, mounting brackets applicable shall also be black. Includes switch in cab (side facing lights switched separately). Location(s): [#LOC].	$2,264
5450-0232	Light Whelen Pioneer Plus model PCP2AFSB 120VAC flood/spot with brow mount powder coated black (EA). Location(s): [#LOC].	$2,261
5450-0233	Light Whelen Pioneer Plus model PCP2ASFB 120VAC spot/flood with brow mount powder coated black (EA). Location(s): [#LOC].	$2,261
5450-0234	Light Whelen Pioneer Plus model PCP2AFSB 120VAC flood/spot with pedestal mount powder coated black. Location(s): [#LOC].	$2,257
5450-0235	Light Whelen Pioneer Plus model PCP2ASFB 120VAC spot/flood with pedestal mount powder coated black. Location(s): [#LOC].	$2,257
5450-0236	Light Whelen 150W/120V model KR-7PFPAC2-HD with portable base, powder coated black and Fire Power FP11 male pigtail. Requires 110V receptacle. Location(s): [#LOC].	$2,902
5450-0237	Light Whelen Pioneer Plus 12V model PCP2 flood/spot with pedestal mount. Includes switch in cab (driver and officer side facing lights switched separately). Location(s): [#LOC].	$2,257
5450-0239	Light Whelen Pioneer Plus model PCP2 flood/spot with pedestal mount (EA). Includes switch in cab (driver and officer side facing lights switched separately). Location(s): [#LOC].	$2,257
5450-0240	Light Whelen Pioneer Plus model PFP2 12V with Quest brow mount (EA) powder coated black. Includes switch in cab accessible to driver (driver and officer side facing lights switched separately). Location(s): [#LOC].	$2,242
5450-0242	Fire Research Spectra 12V LED model SPA260-Q15 powder coated black with surface mount. Includes switch accessible to driver. Location: [#LOC].	$1,881
5450-0243	Quartz light Fire Research Spectra 120V LED model SPA260-K15 powder coated black with surface mount. Location: [#LOC].	$2,263
5450-0244	Light Whelen Pioneer Plus LED model PCP3 12V combination flood and 8 degree spotlight with pedestal mount adapter. Includes switch in cab (side facing lights switched separately). Location(s): [#LOC].	$2,526
5450-0245	Light Whelen Pioneer Plus model PFP2AC 120V with brow mount (EA). Location(s): [#LOC].	$2,195
5450-0246	Light Whelen Micro Pioneer Plus model MPBB with bail mount powder coated black. Includes switch in cab accessible to driver (side facing lights switched separately). Location: [#LOC].	$723
5450-0247	Quartz light MagnaFire 750W/120V model KR-1936 with recess mount powder coated black. Location(s): [#LOC].	$937
5450-0248	Quartz light Fire Research Optimum 1000W/240V model OPA510E-M12-SW with internal pull up pole. Location(s): [#LOC].	$1,634
5450-0252	Light Whelen Pioneer model PFA2 with PBA203 recess mount. Includes switch in cab (driver and officer side facing lights switched separately). Location: [#LOC].	$1,919
5450-0254	Fire Research Evolution 12V LED model FCA830-V15 brow mount powder coated black. Quest cab only. Includes switch accessible to driver (driver and officer side facing lights switched separately). Location [#LOC].	$1,873
5450-0255	Light Fire Research Evolution LED 12V model FCA580-V15 side fixed mount. Includes switch accessible to driver. Location(s): [#LOC].	$1,851
5450-0256	Floodlight Whelen PFP1AC 120v with external mount tripod telepole. Requires 110V receptacle. Location(s): [#LOC].	$2,512
5450-0257	Light Whelen Pioneer model PFP2 12V with external bottom raise pole mount. Includes switch accessible to driver. Location(s): [#LOC].	$2,473
5450-0258	Light Whelen Pioneer Plus model PFP2 12V with internal top raise pole mount. Includes switch accessible to driver. Location: [#LOC].	$2,236

5450-0259	Floodlight Whelen PFP2AC 110V with external mount 50" tripod telepole. Requires 110V receptacle. Location(s): [#LOC].	$3,110
5450-0260	Light Whelen Pioneer model PCP2AP 120V with external bottom raise pole mount. Location(s): [#LOC].	$2,799
5450-0261	Light Whelen Pioneer model PFP2AC 120V with external bottom raise pole mount. Location(s): [#LOC].	$2,574
5450-0262	Light Whelen Pioneer model PFP2 12V with external bottom raise pole mount. Includes switch accessible to driver. Location(s): [#LOC].	$2,487
5450-0263	Light Whelen Pioneer Plus model PCP2 12V flood/spot with brow mount powder coated black. Includes switch in cab (driver and officer side facing lights switched separately). Location(s): [#LOC].	$2,261
5450-0264	Light Whelen Pioneer Plus LED model PFP2 120V with pedestal mount. Location(s): [#LOC].	$2,385
5450-0265	Light Whelen Pioneer model PFP2AC 120V with internal top raise pole mount. Location: [#LOC].	$2,514
5450-0266	Light Whelen Pioneer Plus model PFP2 12V with recess mount. Includes switch accessible to driver (driver and officer switched seperately) and diamond plate mounting boxes for recess mount. Location: [#LOC].	$2,403
5450-0267	Light Whelen 150W/120V with portable base. Requires 110V receptacle. Location(s): [#LOC].	$2,321
5450-0268	Light Fire Research Spectra LED 120V model SPA570-K20 without pole powder coated black. Location(s): [#LOC].	$2,562
5450-0269	Light Fire Research Spectra LED 110V model SPA510-K20 with internal pull-up pole powder coated black. Location(s): [#LOC].	$2,477
5450-0270	Fire Research Evolution 12V LED scene light model FCA510E-V15-SW with internal pull-up pole powder coated black. Includes switch accessible to driver. Location: [#LOC].	$2,324
5450-0271	Akron SceneStar 120V LED model ELSS-XLAC-SM2-PS-UI-TL. Location: [#LOC].	$2,218
5450-0272	Light Whelen Pioneer model PFP2AC 120V powder coated black with internal bottom raise pole mount. Location: [#LOC].	$2,514
5450-0273	Quartz light Fire Research Optimum 1500W/240V model OPA642-M15-ON-603 with 16.625" telescopic tripod pole. Location(s): [#LOC].	$1,667
5450-0274	Fire Research Spectra 12V LED scene light model SPA530E-Q20-SW-H with external push-up pole powder coated black. Includes switch in cab accessible to driver. Location: [#LOC].	$2,767
5450-0276	Akron SceneStar 12V LED model ELSS-XLDC-PU-UI-TL. Location:[#LOC].	$1,936
5450-0277	Light Whelen Pioneer model PFP2 12V powder coated black with external bottom raise pole mount. Includes switch accessible to driver. Location(s) [#LOC].	$2,473
5450-0278	Light Whelen Pioneer Plus model PFP2 12V with recess mount. Location(s): [#LOC].	$2,546
5450-0279	Floodlight Whelen PFP2AC 110V powder coated black with external mount 40" tripod telepole. Requires 110V receptacle. Location(s): [#LOC].	$3,110
5450-0280	Light Whelen Pioneer model PFP1AC 120V with internal top raise pole mount. Includes switch accessible to driver. Location: [#LOC].	$1,795
5450-0281	Quartz light Fire Research Focus 1000W/240V model FCA300U-M12 with roof mount. Location(s): [#LOC].	$952
5450-0282	Light Whelen Pioneer model PCP2 12V powder coated black with external bottom raise pole mount. Includes switch accessible to driver. Location(s) [#LOC].	$2,473
5450-0283	Light Whelen Pioneer Plus model PFP2 12V powder coated black with internal top raise pole mount. Includes switch accessible to driver. Location: [#LOC].	$2,236
5450-0284	Light Whelen 150W/120V with portable base powder coated black. Requires 110V receptacle. Location(s): [#LOC].	$2,321
5450-0285	Floodlight Whelen PFP2AC 110V with external mount custom length tripod telepole. Requires 110V receptacle. Location(s): [#LOC].	$3,110
5450-0286	Light Whelen Pioneer model PCP2 12V with external bottom raise pole mount. Includes switch accessible to driver. Location(s) [#LOC].	$2,473
5450-0287	Light Whelen 12 volt Pioneer Plus model PFP1 with brow mount (EA) powder coated black. Includes switch in cab (driver and officer side facing lights switched separately). Location(s): [#LOC].	$1,543
5450-0288	Light Whelen Pioneer Plus model PFP1 powder coated black with bail mount. Includes switch in cab accessible to driver (side facing lights switched seperately). Location(s): [#LOC].	$1,324
5450-0289	Light Whelen Pioneer model PFP1 12V with external bottom raise custom length pole. Includes switch accessible to driver. Location(s): [#LOC].	$1,720
5450-0290	Light Whelen Pioneer model PFP1 12V with internal top raise pole mount. Includes switch accessible to driver. Location: [#LOC].	$1,660
5450-0292	Light FireTech model FT-SL-15-110-W 120V with internal top raise pole mount (ROM model KR-900-I) pre-assembled from vendor. Location: [#LOC].	$2,412
5450-0293	FireTech 72" 12V brow light with integrated marker lights. Includes switch accessible to driver. Replaces front brow marker lights. Not available on aerials with deep trough.	$3,787
5450-0294	Light Whelen Pioneer Max model PCP3 12V with Whelen external bottom raise pole mount. Includes switch accessible to driver. Location(s): [#LOC].	$2,820
5450-0295	LED scene light ExtendaLite 220W/12V model ELSS-XLDC-PS-SM2-UI-SW with telescopic external push-up pole. Includes switch accessible to driver in cab. Location(s): [#LOC].	$2,181
5450-0296	Fire Research Evolution 12V LED scene light model FCA570-V15 without pole. Includes switch in cab accessible to driver. Location: [#LOC].	$1,924
5450-0297	Light Fire Research Spectra LED 110V model SPA700-K20 with portable mount. Requires 110V receptacle. Location(s): [#LOC].	$2,297
5450-0298	Light Whelen Pioneer Plus model PFP1 with recess mount with painted stainless steel box. Includes switch accessible to driver (side facing lights switched separately). Location(s): [#LOC].	$1,524

5450-0299	Light Whelen Pioneer Plus model PFP1AC 120V with brow mount (EA) powder coated black. Location(s): [#LOC].	$1,562
5450-0300	Light Whelen Pioneer Plus model PFP2AC 120V with recess mount. Locate [#LOC]. Includes diamond plate mounting box for recess mount.	$2,709
5450-0301	Light Fire Research Spectra 120V LED model SPA656-K20-ON-SPA603 with 28" telescopic tripod pole. Location(s): [#LOC].	$3,135
5450-0302	Light Fire Research Spectra 120V LED model SPA642-K20-ON-SPA603 with 16" telescopic tripod pole. Location(s): [#LOC].	$3,135
5450-0304	Light Whelen Pioneer Plus model PFP2 12V with bail mount. Includes switch in cab accessible to driver (side facing lights switched seperately). Location(s): [#LOC].	$1,979
5450-0305	Akron SceneStar 12V LED model ELSS-SLDC-PU-UI-TL. Location: [#LOC].	$1,866
5450-0306	Light Whelen Pioneer Plus model PCP2AFSP 120VAC flood/spot with pedestal mount. Location(s): [#LOC].	$2,503
5450-0307	Light Whelen Pioneer Plus 12V model PCP2 flood/spot with pedestal mount powder coated black. Includes switch in cab (driver and officer side facing lights switched separately). Location(s): [#LOC].	$2,257
5450-0309	Light Whelen Pioneer Plus 12V model PFP2 flood with pedestal mount. Includes switch in cab (driver and officer side facing lights switched separately). Location(s): [#LOC].	$2,199
5450-0310	Fire Research Spectra 120V LED model SPA260-K15 with surface mount and diamond plate mounting box. Location: [#LOC].	$2,373
5450-0311	Light Whelen Pioneer Plus model PCP2 flood/spot with Quest brow mount (EA). Includes switch in cab (driver and officer side facing lights switched separately). Location(s): [#LOC].	$2,261
5450-0312	Quartz light Fire Research Optimum 1000W/240V model OPA530-M12-SR-SW-ON with external push up pole. Location(s): [#LOC].	$1,481
5450-0313	FireTech 11" 12V double stack brow light. Includes switch in cab (driver and officer side facing lights switched separately). Location: [#LOC]	$1,266
5450-0314	FireTech 11" 12V double stack bracket mounted light. Includes switch in cab (driver and officer side facing lights switched separately). Location: [#LOC]	$1,266
5450-0315	Quartz light Fire Research Optimum 750W/110V model OPA642-S75-ON-603 with 16.625" telescopic tripod pole. Location(s): [#LOC].	$1,604
5450-0316	Light Whelen Pioneer model PFP1 12V with PBA103 recess mount in painted smooth plate boxes. Includes switch accessible to driver (driver and officer side facing lights switched separately). Location: [#LOC].	$1,539
5450-0317	Quartz light Fire Research Focus 1000W/120V model FCA530-M10-CL50-SR-SW-ON with external push up pole. Location(s): [#LOC].	$1,673
5450-0318	Fire Research Spectra Max 12V LED model SPA260-Q20 with surface mount. Includes switch accessible to driver. Location: [#LOC].	$2,034
5450-0319	Akron SceneStar 12V LED model ELSS-XLDC-SM2-PS-UI-TL. Includes switch accessible to driver. Location: [#LOC].	$2,218
5450-0320	Light Whelen Pioneer Plus model PFP1 12V powder coated black with recess mount. Includes switch accessible to driver (side facing lights switched separately). Location(s): [#LOC].	$1,324
5450-0321	FireTech 72" 12V brow light with integrated marker lights and black housing. Includes switch accessible to driver. Replaces front brow marker lights. Not available on aerials with deep trough.	$3,787
5450-0322	Light Fire Research Spectra Max 120V LED model SPA642-K28-ON-SPA603 with 16" telescopic tripod pole. Location(s): [#LOC].	$3,135
5450-0323	Light Whelen Pioneer Plus model PFP2AC 120V powder coated black with recess mount. Location(s): [#LOC].	$2,546
5450-0324	Light Whelen Pioneer model PCP2 powder coated black with PBA203 recess mount in fabricated diamond plate boxes. Includes switch in cab (driver and officer side facing lights switched separately). Location: [#LOC].	$2,345
5450-0325	Light Whelen Pioneer model PCP2 with chrome surface mount. Includes switch in cab accessible to driver (driver and officer side facing lights switched separately). Location: [#LOC].	$1,928
5450-0326	Fire Research Spectra 12V LED model SPA260-Q15 with surface mount and diamond plate mounting box. Location: [#LOC].	$2,001
5450-0327	Light Whelen Pioneer model PFP2AC 120V with internal bottom raise pole mount. Location: [#LOC].	$2,514
5450-0328	Federal Signal Commander 12V LED scene light model COMLC15K-510E-SW with internal pull-up pole. Includes switch accessible to driver. Location: [#LOC].	$2,273
5450-0329	Fire Research Spectra 120V LED model SPA260-K15 with surface mount and smooth plate painted mounting box. Location: [#LOC].	$2,475
5450-0330	Diamond plate mounting boxes (4). For use with scene lights and warning lights. Locate on driver side forward and rearward compartment tops outboard; boxes to be full depth of compartment top. Officer side forward and rearward upper body corners.	$849
5450-0331	Quartz light Fire Research Focus 500W/110V model FCA802-S50-01 with brow mount (EA). Location(s): [#LOC].	$874
5450-0332	Light Whelen Pioneer model PFP2AC 120V powder coated black with external bottom raise pole mount. Location(s): [#LOC].	$2,574
5450-0333	Quartz light KwikRaze 1500W/220V model KR-93D-I-NCW with internal telepole. Location(s): [#LOC].	$912
5450-0334	Akron SceneStar 120V LED model ELSS-XLAC-RM recess mount. Location: [#LOC].	$1,865
5450-0335	LED light SceneStar 220W/12V model ELSS-XLDC-BL. Includeds switch accessible to driver. Location(s): [#LOC].	$2,034

5450-0336	Quartz light Fire Research Focus 500W/120V model FCA300U-S50 with brow mount. Location: Center of cab brow.	$898
5450-0337	FireTech 35" 12V mini brow light. Includes switch in cab (driver and officer side facing lights switched separately). Location: [#LOC]	$1,885
5450-0339	FireTech 46" 12V brow light with black housing. Includes switch accessible to driver (driver and officer side facing lights switched separately). Location: [#LOC]	$2,221
5450-0340	Extended brow light brackets for use with FireTech front brow light with standard cab trough.	$244
5450-0341	FireTech 72" 12V scene light with black housing. Includes switch accessible to driver. Side facing lights switched seperately. Location: [#LOC].	$3,611
5450-0342	Light shield for FireTech 72" scene light (EA). Smooth aluminum painted Durabak black. Location: [#LOC].	$318
5450-0343	Light Whelen 12V Pioneer model PFP2 powder coated black with PBA203 recess mount. Includes switch accessible to driver (side facing lights switched separately). Location: [#LOC].	$2,132
5450-0344	Light Whelen Slimline Pioneer Plus model PSL2 12V with recess mount. Includes switch in cab accessible to driver (side facing lights switched seperately). Location: [#LOC].	$1,250
5450-0345	Quartz light Fire Research Optimum 750W/110V model OPA200-S75 with recess mount with diamond plate box. Location(s): [#LOC].	$1,136
5450-0346	FireTech 72" 12V brow lights with integrated marker lights for Quest. Includes (3) 24" brow lights with switch accessible to driver. Replaces front brow marker lights. Not available on aerials with deep trough.	$3,787
5450-0347	Quartz light Fire Research Optimum 750W/110V portable model OPA700-S75-OP703 powder coated black. Location(s): [#LOC].	$888
5450-0348	Light Whelen Slimline Pioneer Plus model PSL2 12V with pedestal mount. Includes switch in cab accessible to driver (side facing lights switched seperately). Location: [#LOC].	$1,310
5450-0349	Floodlight Whelen PFP2AC 110V powder coated black with external mount 50" tripod telepole. Requires 110V receptacle. Location(s): [#LOC].	$3,110
5450-0350	Light Whelen Pioneer model PFP1AC 120V with external bottom raise pole mount. Location(s): [#LOC].	$2,145
5450-0351	Light Whelen Pioneer model PCP2 with PBA203 recess mount in smooth plate mounting boxes painted job (2-tone if applicable) color. Includes switch in cab (driver and officer side facing lights switched separately). Location: [#LOC].	$2,384
5450-0353	Light Fire Research Spectra 12V LED model SPA850-Q20 with flat mount. Location: [#LOC].	$2,315
5450-0354	Fire Research Spectra 120V LED model SPA260-K20 with surface mount. Location: [#LOC].	$2,399
5450-0355	Fire Research Spectra 120V LED scene light model SPA540-K20-CL-SW-H powder coated black with external pull-up pole. Location: [#LOC].	$2,762
5460-0000	Light tower Night Scan Powerlite NS3.0-3000M with four 750 watt 115 volt MagnaFire quartz light heads. Requires air brakes or air system and auxiliary air tank. Tower to be located [#LOC].	$21,706
5460-0001	Night Scan Powerlite NS3.0-4500M light tower with six 750 watt 115 volt MagnaFire quartz light heads. Control to be located next to the breaker box. Requires air brakes or air system and auxiliary air tank. Tower to be located [#LOC].	$23,653
5460-0002	Night Scan Powerlite NS4.5-3000M light tower with four 750 watt 115 volt MagnaFire quartz light heads. Control to be located next to the breaker box. Requires air brakes or air system and auxiliary air tank. Tower to be located [#LOC].	$22,312
5460-0003	Night Scan Powerlite NS4.5-4500M light tower with six 750 watt 115 volt MagnaFire quartz light heads. Control to be located next to the breaker box. Requires air brakes or air system and auxiliary air tank. Tower to be located [#LOC].	$24,033
5460-0004	Night Scan Powerlite NS4.5-6000A light tower with four 1500 watt 220 volt quartz light heads. Control to be located next to the breaker box. Requires air brakes or air system and auxiliary air tank. Tower to be located [#LOC].	$21,045
5460-0005	Night Scan Powerlite NS4.5-6000OPT light tower with four 1500 watt 230 volt Optimum quartz light heads. Control to be located next to the breaker box. Requires air brakes or air system and auxiliary air tank. Tower to be located [#LOC].	$20,761
5460-0006	Night Scan Powerlite NS4.5-9000OPT light tower with six 1500 watt 230 volt Optimum quartz light heads. Control to be located next to the breaker box. Requires air brakes or air system and auxiliary air tank. Tower to be located [#LOC].	$25,986
5460-0010	Will-Burt Night Scan extension harness. Required when tower is installed on custom cab roof or more than 20' from controller location.	$1,069
5460-0011	Night Scan Chief NS1.8-3000A light tower with two 1500 watt 230 volt quartz light heads. Control to be located next to the breaker box. Tower to be located [#LOC].	$12,795
5460-0013	Command Light light tower model CL 605. Includes (6) 500 watt quartz halogen lights and a green strobe. Location: [#LOC].	$20,312
5460-0014	Command Light light tower model CL 610. Includes (6) 650 watt quartz halogen lights and a green strobe. Location: [#LOC].	$18,197
5460-0019	Command Light light tower model CL 611. Includes (6) 1000 watt quartz halogen lights and a green strobe. Location: [#LOC].	$19,613
5460-0020	Night Scan Powerlite NS3.0-4500 Profiler light tower with three (3) 1500 watt, 230 volt Optimum Fire Research quartz light heads. Control to be located next to the breaker box. Requires air brakes or air system and an auxiliary air tank. Location: [#LOC].	$20,206
5460-0021	Command Light light tower model CL 615. Includes (6) 1500 watt quartz halogen lights and a green strobe. Location: [#LOC].	$19,613
5460-0022	Command Light Knight tower model KL450. Includes (6) 500 watt quartz halogen lights and a green strobe. Location: [#LOC].	$13,378
5460-0024	Command Light light tower model SL429-RT. Includes (2) 1500 watt quartz halogen lights. Control to be located next to the breaker box. Location: [#LOC].	$8,627

5460-0025	Night Scan Powerlite NS4.5-5400M light tower with six 900 watt 230 volt MagnaFire quartz light heads. Control to be located next to the breaker box. Requires air brakes or air system and auxiliary air tank. Tower to be located [#LOC].	$22,564
5460-0026	Night Scan Chief NS1.8-3000A light tower with two 1500 watt 230 volt quartz light heads. Control to be located next to the breaker box. Tower to be located [#LOC].	$12,795
5460-0027	Command Light tower option, back lighting.	$2,006
5460-0030	Command Light light tower model KL475HS. Includes (6) 750 watt Magnafire quartz halogen lights and a green strobe. Location: [#LOC].	$16,513
5460-0031	Night Scan Chief NS1.8-3000M light tower with four 750 watt 115 volt MagnaFire quartz light heads. Control to be located next to the breaker box. Tower to be located [#LOC].	$14,061
5460-0032	Command Light light tower model KL475HS. Includes (6) 750 watt Magnafire quartz halogen lights and a red strobe. Location: [#LOC].	$16,513
5460-0033	Night Scan Powerlite NS4.5-3600M light tower with four 900 watt 230 volt MagnaFire quartz light heads. Control to be located next to the breaker box. Requires air brakes or air system and auxiliary air tank. Tower to be located [#LOC].	$19,927
5460-0034	Command Light light tower model CL 615. Includes (4) 1500 watt quartz halogen lights, (2) 1000 watt Metal Halide light heads, and a green strobe. Locate [#LOC].	$20,743
5460-0036	Night Scan Chief NS2.3-3000M light tower with four 750 watt 115 volt MagnaFire quartz light heads. Control to be located next to the breaker box. Tower to be located [#LOC].	$13,220
5460-0038	Command Light light tower model CL 615. Includes (6) 1000 watt quartz halogen lights and a green strobe. Location: [#LOC].	$19,613
5460-0039	Will-Burt 5.4-17IWM Vertical Light Mast. Includes (4) 1500W Optimum light heads. Locate ceneterd (as applicable) in the forward dunnage pan area over LT/RT. Mast will run into transverse area. Controller to be in L3 forward area for use by the pump operator.	$21,078
5460-0040	Night Scan Powerlite NS4.5-6000OPT light tower with four 1500 watt 230 volt Optimum quartz light heads. Light heads and base covers painted job color. Control to be located next to the breaker box. Requires air brakes or air system and auxiliary air tank. Tower to be located [#LOC].	$23,843
5460-0042	Will-Burt 5.4-17 Vertical Light Mast. Includes (6) 1500W Optimum light heads. Locate ceneterd (as applicable) in the forward dunnage pan area over [#LOC]. Mast will run into transverse area. Controls will be located next to breaker box.	$21,078
5460-0043	Night Scan Powerlite NS3.0-6000OPT light tower with four 1500 watt 230 volt Optimum quartz light heads. Control to be located next to the breaker box. Requires air brakes or air system and auxiliary air tank. Tower to be located [#LOC].	$23,653
5460-0045	Night Scan Powerlite NS4.5-3000M light tower with four 750 watt 115 volt MagnaFire quartz light heads. Control to be located next to the breaker box. Requires air brakes or air system and auxiliary air tank. Tower to be located [#LOC].	$21,933
5460-0046	Command Light light tower model KL450. Includes black powder coat finish with (6) 500 watt quartz halogen lights and a green strobe. Location: [#LOC].	$14,629
5460-0047	Night Scan Chief NS2.3-6000OPT light tower with four 1500 watt 230 volt FRC Optimum quartz light heads. Control to be located next to the breaker box. Tower to be located [#LOC].	$13,231
5460-0048	Command Light light tower model CL 615 with FRC Optimum lightheads. Includes (6) 1500 watt quartz halogen lights and an amber strobe. Location: [#LOC].	$24,401
5460-0049	Wireless remote control for Command Light tower. Includes splitter box for use with standard controller. Wireless control located at final inspection.	$4,511
5460-0050	Night Scan Powerlite NS 3.0-3600M light tower with four 900 watt 230 volt MagnaFire quartz light heads. Control to be located next to the breaker box. Requires air brakes or air system and auxiliary air tank. Tower to be located [#LOC].	$19,428
5460-0053	Command Light light tower model CL602A with Whelen PFP2AC lightheads. Includes (6) 150 watt LED lights and an amber strobe. Location: [#LOC].	$32,318
5460-0059	Command Light Knight tower model KL465. Includes (6) 650 watt quartz halogen lights. Location: [#LOC].	$13,378
5460-0060	Night Scan Powerlite NS3.0-4000OPT light tower with four 1000 watt 230 volt Optimum quartz light heads and D-TECH II safety system. Control to be located next to the breaker box. Requires air brakes or air system and auxiliary air tank. Tower to be located [#LOC].	$27,851
5460-0062	Light tower disconnect. Provided junction box for 110V wiring and weather proof connector for control wires.	$355
5460-0064	Night Scan Chief NS1.8-6000OPT light tower with four 1500 watt 230 volt FRC Optimum quartz light heads. Control to be located next to the breaker box. Requires air brakes or air system and auxiliary air tank. Tower to be located [#LOC].	$13,746
5460-0065	Night Scan Chief 1.8-3600M light tower with four 900 watt 230 volt quartz light heads. Control to be located next to the breaker box. Tower to be located [#LOC].	$15,391
5460-0066	Command Light light tower model CL602D with Whelen PFP2 12V lightheads. Includes (4) 150 watt LED lights and a amber strobe. Location: [#LOC].	$26,797
5460-0067	Night Scan Chief NS2.3-600LED Whelen light tower with (4) 150 watt 12V Whelen Pioneer PFP2 LED light heads. Control to be located next to the breaker box if equipped or the forward wall of L1 if unit has no breaker box. Tower to be located [#LOC].	$16,906
5460-0069	Command Light Knight tower model KL450. Includes (6) 500 watt quartz halogen lights and a amber strobe. Location: [#LOC].	$13,378
5460-0070	Night Scan Chief NS1.8-3000-4-MGN-110v light tower with four 750 watt 115 volt MagnaFire quartz light heads. Control to be located next to the breaker box. Tower to be located [#LOC].	$10,896
5460-0071	Night Scan Powerlite NS3.0-600WHL light tower with (4) 150 watt 120 volt Whelen Pioneer PFP2AC LED light heads. Control to be located next to the breaker box. Requires air brakes or air system and auxiliary air tank. Ahead of vista location requires riser. Tower to be located [#LOC].	$29,712

5460-0072	Night Scan Powerlite NS3.0-900WHL light tower with (6) 150 watt 120 volt Whelen Pioneer PFP2AC LED light heads. Control to be located next to the breaker box. Requires air brakes or air system and auxiliary air tank. Ahead of vista location requires riser. Tower to be located [#LOC].	$35,145
5460-0073	Night Scan Chief NS1.8-600WHL 120V Whelen light tower with (4) 150 watt 120 volt Whelen Pioneer PFP2AC LED light heads. Control to be located next to the breaker box. Tower to be located [#LOC].	$24,923
5460-0074	Night Scan Chief NS1.8-600 Whelen light tower with (4) 150 watt 12V Whelen Pioneer PFP2 LED light heads. Control to be located next to the breaker box. Tower to be located [#LOC].	$17,048
5460-0075	Night Scan Powerlite NS4.5-900WHL light tower with (6) 150 watt 120 volt Whelen Pioneer PFP2AC LED light heads. Control to be located next to the breaker box. Requires air brakes or air system and auxiliary air tank. Tower to be located [#LOC].	$35,967
5460-0076	Night Scan Powerlite NS4.5-600WHL light tower with (4) 150 watt 120 volt Whelen Pioneer PFP2AC LED light heads. Control to be located next to the breaker box. Requires air brakes or air system and auxiliary air tank. Tower to be located [#LOC].	$30,449
5460-0077	Night Scan Chief NS2.3-600LED Whelen light tower with (4) 150 watt 110V Whelen Pioneer PFP2AC LED light heads. Control to be located next to the breaker box. Tower to be located [#LOC].	$25,170
5460-0080	Night Scan Chief NS2.3-920SPA 12V FRC light tower with (4) 230 watt 12 volt FRC Spectra LED light heads. Control to be located next to the breaker box. Tower to be located [#LOC].	$22,683
5460-0081	Night Scan Chief NS2.3-920SPA 120V FRC light tower with (4) 230 watt 120 volt FRC Spectra LED light heads. Control to be located next to the breaker box. Tower to be located [#LOC].	$22,683
5460-0082	Night Scan Powerlite NS3.0-920SPA light tower with (4) 230 watt 120 volt FRC Spectra LED light heads. Control to be located next to the breaker box. Requires air brakes or air system and auxiliary air tank. Ahead of vista location requires riser. Tower to be located [#LOC].	$35,282
5460-0083	Night Scan Powerlite NS3.0-1380SPA light tower with (6) 230 watt, 120 volt FRC Spectra LED light heads. Control to be located next to the breaker box. Requires air brakes or air system and auxiliary air tank. Ahead of vista location requires riser. Tower to be located [#LOC].	$40,534
5460-0085	Night Scan Powerlite NS4.5-1380SPA light tower with (6) 230 watt 120 volt FRC Spectra LED light heads. Control to be located next to the breaker box. Requires air brakes or air system and auxiliary air tank. Tower to be located [#LOC].	$40,808
5460-0086	Command Light light tower model CL 607. Includes (6) 750 watt ROM Magnafire quartz halogen lights and a green strobe. Location: [#LOC].	$24,556
5460-0087	Command Light light tower model CL 607. Includes (6) 750 watt FRC Optimum quartz halogen lights and a green strobe. Location: [#LOC].	$24,556
5460-0088	Command Light light tower model CL602A with Whelen PFP2AC lightheads. Includes (4) 150 watt LED lights. Location: [#LOC].	$31,205
5460-0089	Command Light light tower model CL602A with FRC 120V Spectra lightheads. Includes (4) 220 watt LED lights. Location: [#LOC].	$31,205
5460-0090	Command Light light tower model CL602A with FRC 120V Spectra lightheads. Includes (6) 220 watt LED lights. Location: [#LOC].	$32,318
5460-0091	Command Light light tower model CL602D with FRC Spectra 12V lightheads. Includes (4) 220 watt LED lights. Location: [#LOC].	$26,797
5460-0092	Command Light light tower model KL475OPT. Includes (6) 750 watt FRC Optimum quartz halogen lights. Location: [#LOC].	$16,195
5460-0093	Command Light light tower model KL415A. Includes (6) 220 watt 120V FRC Spectra LED lights. Control to be located adjacent to breaker box. Location: [#LOC].	$30,041
5460-0094	Command Light light tower model KL415A. Includes (6) 150 watt 120V Whelen Pioneer PFP2 LED lights. Control to be located adjacent to breaker box. Location: [#LOC].	$30,041
5460-0095	Command Light light tower model KL415A. Includes (4) 220 watt 120V FRC Spectra LED lights. Control to be located adjacent to breaker box. Location: [#LOC].	$24,557
5460-0096	Command Light light tower model KL415A. Includes (4) 150 watt 120V Whelen Pioneer PFP2 LED lights. Control to be located adjacent to breaker box. Location: [#LOC].	$24,557
5460-0097	Command Light light tower model KL415D. Includes (4) 220 watt 12V FRC Spectra LED lights. Control to be located adjacent to breaker box. Location: [#LOC].	$23,186
5460-0098	Command Light light tower model KL415D. Includes (4) 150 watt 12V Whelen Pioneer PFP2 LED lights. Control to be located adjacent to breaker box if equipped or L1 forward wall in available space if not otherwise specified. Location: [#LOC].	$23,186
5460-0100	Command Light light tower model SL422D. Includes (2) 150 watt Whelen 12V Pioneer lights. Control to be located next to the breaker box. Location: [#LOC].	$11,943
5460-0101	Command Light light tower model CL602A-2MH. Includes (4) 110V 220 watt FRC Spectra LED lights and (2) 230V 1000W metal halide lights. Location: [#LOC].	$33,947
5460-0102	Night Scan Chief NS1.8-3000OPT light tower with four 750 watt FRC Optimum quartz light heads. Control to be located next to the breaker box. Tower to be located on [#LOC].	$13,521
5460-0103	Night Scan Powerlite NS3.0-900WHL light tower with (6) 150 watt 120 volt Whelen Pioneer PFP2AC LED light heads. Control to be located next to the breaker box. Requires air brakes or air system and auxiliary air tank. Tower to be located rearward on flat roof (non vista) and mounted side to side and hinged to driver. Placement to allow 45 degree shield to be placed in normal vista rise locations to allow cab to appear to have vista roof.	$35,145
5460-0106	Strobe light for Command Light tower. Color: [#COL].	$345
5460-0107	Night Scan Powerlite NS2.3-225WHL Profiler light tower with three (3) 75 watt, 12 volt Whelen Pioneer PFP1 light heads. Control to be located next to the breaker box (if equipped). Location: [#LOC].	$20,438

5460-0110	Night Scan Powerlite NS3.0-5400M light tower with six 900 watt 230 volt MagnaFire quartz light heads. Control to be located next to the breaker box. Requires air brakes or air system and auxiliary air tank. [#LOC].	$22,111
5460-0111	Command Light light tower model CL 609. Includes (6) 900 watt ROM Magnafire quartz halogen lights and a green strobe. Location: [#LOC].	$24,795
5460-0112	Night Scan NS3.0-2250M Profiler light tower with three (3) 750 watt, 115 volt MagnaFire quartz light heads. Control to be located next to the breaker box. Requires air brakes or air system and an auxiliary air tank. Location: [#LOC].	$20,206
5460-0113	Command Light light tower model KL475. Includes (6) 750 watt Magnafire quartz halogen lights. Location: [#LOC].	$16,195
5460-0114	Night Scan Chief NS1.8-300LED Whelen light tower with (2) 150 watt 12 volt Whelen Pioneer PFP2 LED light heads. Control to be located adjacent to breaker box. Tower to be located [#LOC].	$13,474
5460-0116	Night Scan Powerlite NS4.5-2100SPA light tower with (6) 350 watt 120 volt FRC Spectra LED light heads. Control to be located next to the breaker box. Requires air brakes or air system and auxiliary air tank. Tower to be located [#LOC].	$41,928
5460-0118	Command Light light tower model SL447-RT. Includes (4) 750 watt 120V FRC Optimum quartz halogen lights. Control to be located next to the breaker box. Location: [#LOC].	$10,254
5470-0000	Receptacle twist lock 15A/110V 3 wire NEMA L5-15 with cover plate. Location: [#LOC].	$303
5470-0001	Receptacle twist lock 20A/110V 3 wire NEMA L5-20 with cover plate. Location: [#LOC].	$316
5470-0002	Receptacle twist lock 30A/110V 3 wire NEMA L5-30 with cover plate. Location: [#LOC].	$340
5470-0004	Receptacle household 20A/110V duplex 3-prong NEMA 5-20 with cover plate interior mounted wired to inlet receptacle. Location: [#LOC].	$298
5470-0005	Receptacle household 15A/110V Daniel Woodhead duplex 3 wire NEMA 5-15 w/Daniel Woodhead cover plate. Location: [#LOC]	$550
5470-0006	Receptacle twist lock 15A/110V Daniel Woodhead 3 wire NEMA L5-15 w/Daniel Woodhead cover plate. Location: [#LOC]	$494
5470-0007	Receptacle twist lock 15A/220V Daniel Woodhead 3 wire NEMA L6-15 w/Daniel Woodhead cover plate. Location: [#LOC]	$624
5470-0008	Receptacle twist lock 20A/110V Daniel Woodhead 3 wire NEMA L5-20 w/Daniel Woodhead cover plate. Location: [#LOC].	$509
5470-0009	Receptacle twist lock 20A/220V Daniel Woodhead 3 wire NEMA L6-20 w/Daniel Woodhead cover plate. Location: [#LOC]	$673
5470-0010	Receptacle twist lock 20A 110V/220V Daniel Woodhead 4 wire NEMA L14-20 w/Daniel Woodhead cover plate. Location: [#LOC]	$697
5470-0011	Receptacle twist lock 15A/220V 3 wire NEMA L6-15 with cover plate. Location: [#LOC]	$440
5470-0012	Receptacle twist lock 20A/220V 3 wire NEMA L6-20 with cover plate. Location: [#LOC].	$440
5470-0013	Receptacle twist lock 20A 110V/220V 4 wire NEMA L14-20 with cover plate. Location: [#LOC].	$599
5470-0014	Receptacle twist lock 30A/220V 3 wire NEMA L6-30 with cover plate. Location: [#LOC].	$599
5470-0015	Receptacle twist lock 30A 110V/220V 4 wire NEMA L14-30 with cover plate. Location: [#LOC]	$594
5470-0016	Receptacle shoreline 30A/110V with auto transfer switch. The receptacle shall be located [#LOC].	$1,014
5470-0017	Receptacle household 20A/110V duplex 3-prong NEMA 5-20 with cover plate. Location: [#LOC].	$288
5470-0018	Receptacle shoreline 50A/220V with auto transfer switch. The receptacle shall be located [#LOC].	$1,024
5470-0019	Receptacle FirePower 20A/110V model FP-11 with cover plate. Location: [#LOC].	$349
5470-0020	Receptacle 12V military with A pin Positive, B pin Negative, C pin Blank. Location: [#LOC]	$239
5470-0021	12 volt power point wired battery hot. Location [#LOC]	$58
5470-0023	Fuse 15A in B1 compt for 12V power point receptacle.	$91
5470-0024	Receptacle 15A/110V duplex with (1) 3-prong NEMA 5-15 and (1) twist lock NEMA L5-15 with cover plate. Location: [#LOC].	$322
5470-0025	Receptacle household 30A/110V 3-prong NEMA 5-30 with cover plate. Location: [#LOC]	$329
5470-0026	Receptacle household 15A/110V duplex 3-prong NEMA 5-15 with cover plate interior mounted wired to inlet receptacle. Location: [#LOC].	$276
5470-0027	Household switch with weaterproof cover located near receptacle at [#LOC]. Switch to operate single leg of this duplex receptacle.	$497
5470-0028	Receptacle household 20A/110V Daniel Woodhead duplex 3 wire NEMA 5-20 w/Daniel Woodhead cover plate. Location: [#LOC].	$565
5470-0029	Receptacle Hubbell twist lock 20A 110V/250V 3 wire NON-NEMA with cover plate. Location: [#LOC].	$376
5470-0030	Receptacle twist lock 15A/110V 3 wire NEMA L5-15 with yellow Daniel Woodhead cover plate. Location: [#LOC].	$369
5470-0031	Receptacle twist lock 15A/110V duplex 3 wire NEMA L5-15 with yellow Daniel Woodhead cover plate. Location: [#LOC]. Top duplex will be hooked to toogle switch next to it.	$624
5470-0032	Receptacle 12V Marinco model 2018BR with model 2018MB cover wired battery hot. Includes model 2018BP male connector. Location: [#LOC].	$417
5470-0034	Receptacle shoreline 50A/220V. The receptacle shall be located [#LOC]. No additional breaker box is included in this code.	$274
5470-0036	9 outlet Stanley model 31610 household 15A/110V power strip wired to inlet receptacle. Location: [#LOC].	$180
5470-0039	Receptacle NON-NEMA locking 20A 120V/250V Daniel Woodhead model 67W08 w/Daniel Woodhead cover plate. Location: [#LOC].	$697
5470-0040	Receptacle twist lock 50A/220V 3 wire NEMA L6-50 with cover plate. Location: [#LOC].	$729
5470-0041	Receptacle household 15A/110V duplex 3-prong NEMA 5-15 with cover plate interior mounted wired to inlet receptacle. Location: R1 forward wall 24" up.	$276
5470-0042	Auto-Eject receptacle inlet 30 amp 120 volt with auto transfer switch. The receptacle shall be located [#LOC] and with a [#COL] cover.	$1,475

5470-0047	6 outlet household 15A/110V power strip wired to inlet receptacle. Location: [#LOC].	$207
5470-0048	Service 30A/220V 4 wire with junction box. Location: [#LOC].	$463
5470-0051	6 outlet household 20A/110V power strip wired to inlet receptacle. Location: [#LOC].	$207
5470-0053	Receptacle inlet 110 VAC, L5-30 Amp twist lock with a [#COL] cover. Location: [#LOC].	$277
5470-0054	Receptacle household 15A/110V duplex 3-prong NEMA 5-15 with cover plate interior mounted wired to generator (not wired to inlet/shoreline). Location: [#LOC].	$276
5470-0055	Receptacle household 15A/110V duplex 3-prong NEMA 5-15 with cover plate. This receptacle shall be GFCI protected and have a push button reset on the receptacle. Location: [#LOC].	$300
5470-0057	Receptacle household 20A/110V duplex 3-prong NEMA 5-20 with cover plate interior mounted wired to generator (not wired to inlet/shoreline). Location: [#LOC].	$288
5470-0060	Receptacles household 15A/110V duplex 3-prong NEMA 5-15 and 20A/110V twist lock receptacle NEMA L5-20 with cover plates. The receptacles shall be GFCI protected. The 5-15 receptacle shall have a push button reset on the receptacle, the L5-20 shall be GFCI protected at the breaker. Location: (1) set of (2) 5-15 and (1) L5-20 GFCI receptacles each side in cab wheel well area.	$772
5470-0061	Grainger model 2MV42; 6 outlet household 15A/110V power strip wired to inlet receptacle. Location: [#LOC].	$324
5470-0066	12 volt power point wired battery hot. Location: in rear walkin body, on forward wall, above desk, driver side.	$58
5470-0067	12 volt power point wired battery hot. Location: Inside walkin body compartment DS2, low on back wall as far forward as posable. REF customer drawing	$58
5470-0068	12 volt power point wired battery hot. Location: Inside walkin body compartment OS2, low on back wall as far forward as posable. REF customer drawing	$58
5470-0071	Receptacle household 15A/110V duplex 3-prong NEMA 5-15 with cover plate interior mounted wired to inlet receptacle and shall include as part of the receptacle 15 amp over current protection. This receptacle shall be GFCI protected and have a push button reset on the receptacle. Location: [#LOC].	$326
5470-0072	Each receptacle shall be labeled to identify the power source (Shoreline, Generator).	$119
5470-0075	Receptacle household 30A/220V 3 wire NEMA 6-30 with cover plate. Location: [#LOC].	$599
5470-0076	Receptacle Hubbell twist lock 15A/110V 3 wire NEMA L5-15 with cover plate. Location: [#LOC].	$376
5470-0077	Receptacle Hubbell twist lock 20A/250V 4 wire NEMA L15-20 with cover plate. Location: [#LOC].	$376
5470-0080	Receptacle; Schuko 250V model 70310 with weatherproof cap. Location: [#LOC].	$440
5470-0081	Receptacle household 20A/110V duplex 3-prong NEMA 5-20 with cover plate exterior mounted wired to inlet receptacle. Location: [#LOC].	$298
5470-0082	Receptacle 20A/220V 3 wire NEMA 6-20 with cover plate wired to inlet receptacle. Location: [#LOC].	$440
5500-0004	Code3 V-Con #3692 siren recessed mounted.	$730
5500-0005	Federal Signal electronic EQ2B-EF siren. Includes 200 watt speaker with square "E-ONE" grille. Speaker location: [#LOC].	$3,680
5500-0006	Federal electronic e-Q2B siren. Includes "Q" grille. Speaker location: [#LOC].	$4,172
5500-0007	Federal MS4000 siren recessed mounted.	$830
5500-0009	Federal PA300 electronic siren recessed mounted.	$686
5500-0010	Federal Q2B siren - flush mounted in bumper. Location: [#LOC].	$2,932
5500-0011	Federal Q2B siren - Pedestal mounted on bumper. Location: [#LOC].	$2,641
5500-0012	Prewire for Federal Q2B mechanincal siren.	$274
5500-0015	Whelen model 295SLSA1 siren with microphone (replaced 295HFSA1).	$910
5500-0016	Code 3 V-Con #3672 siren recessed mounted.	$730
5500-0017	Whelen model 295HFSM1 siren with mechanical siren tone and microphone. N/A in California.	$1,000
5500-0019	Code 3 #3997 siren. Requires (1) 200 watt or (2) 100 watt speakers.	$1,679
5500-0020	Federal PA4000 siren recessed mounted.	$732
5500-0022	Federal PA300 siren mounted on electrical access panel between the driver and officer front seats.	$686
5500-0023	Unitrol model UTM1 siren with option to disable Hi/Low feature (UOP09). Route radio re-broadcast cable to officer side overhead for OCFA radio installation.	$731
5500-0027	Signal Vehicle Products model SS741MG siren recessed mounted.	$577
5500-0028	Integrated Siren System with dual control heads, separate PA controls with remote mircrophone and volume switch.	$839
5500-0030	Code 3 #3997R siren. Requires (1) 200 watt or (2) 100 watt speakers.	$1,679
5500-0031	Whelen model 295HFSA7 siren with microphone.	$1,423
5500-0032	Federal / Unitrol #U480K-4 siren.	$1,508
5500-0034	Federal Rumbler secondary siren. Includes amp, timer, and two speakers mounted under vehicle. Requires control switch.	$1,200
5500-0036	Whelen model 295HFSC9 siren with microphone. N/A in California.	$1,143
5500-0037	Federal PA300 siren recessed mounted. Microphone to be removed and a plug is to be installed in the wiring hole.	$686
5500-0038	Federal / Unitrol #UTM4 siren.	$1,525
5500-0040	Powercall DX5200 siren control. For use with (1) 200 watt speaker or up to (2) 100W speakers.	$915
5500-0041	Federal electronic Q2B-EF siren. Includes two (2) ES100 speakers with square "E-ONE" grilles. Speaker location: [#LOC].	$3,808
5500-0044	Whelen model 295HFSA7 siren with microphone. Microphone to be removed (shipped loose) and a plug is to be installed in the wiring hole.	$1,423
5500-0045	Whelen model 295SLSC1 siren with plug-in microphone. N/A in California.	$910
5500-0048	Federal PA300 100W siren recessed mounted.	$643
5500-0049	Whelen Howler secondary siren. Includes amp, timer, and two speakers mounted under vehicle.	$1,214

5500-0050	Integrated Siren System with dual control heads. No microphone or volume control.	$839
5500-0051	Federal PA300R siren with single control. PA control and volume switch located on electrical access panel.	$824
5500-0052	Federal PA640 electronic siren recessed mounted.	$686
5500-0054	Federal / Unitrol #UTM1 siren.	$1,102
5500-0059	Whelen model 295SL100 siren with microphone (replaced 295HF100).	$859
5500-0060	Whelen Howler secondary siren. Includes amp, timer, and two speakers mounted under gravelshield.	$1,214
5500-0062	Screaming Eagle flange mount siren in bumper. Location: [#LOC].	$2,952
5500-0063	Federal electronic Q2B-EF siren. Includes two ES100 speakers with square "EF" grilles. Speaker location: [#LOC].	$3,808
5500-0066	Whelen model 295SLSA1 siren without microphone.	$910
5500-0067	Whelen model 295SLSC1 siren without microphone. N/A in California.	$910
5500-0068	Pre-wire for Tomar Emitter. Coil 4' of wire in driver's overhead panel.	$274
5500-0069	Prewire for Federal Q2B mechanincal siren. Officer side front bumper.	$274
5500-0070	Federal Signal electronic EQ2B-EF siren. Includes 200 watt speaker with "EF" grille. Speaker location: [#LOC].	$3,680
5500-0072	Powercall X71 siren control. For use with (1) 100W speaker. Locate switch on officer side switch panel.	$579
5500-0074	Whelen model 295HFS2 siren with flush mount siren head, remote amplifier and microphone. N/A in California.	$1,047
5500-0075	Carson SA-400M siren recessed mounted.	$1,129
5500-0076	Federal Q2B siren - flush mounted in bumper. Incudes diamond plate housing for siren to space outward to clear in bumper options. Location: center front bumper.	$3,111
5510-0002	Speaker Federal BP200 mounted through bumper. Location: [#LOC].	$1,148
5510-0003	Speaker Federal CP100S pedestal mounted. Location: [#LOC].	$750
5510-0006	Speaker Federal ES100-MSBMT. Location: [#LOC].	$446
5510-0007	Speaker Cast Products SA2401 100W thru bumper. Location: [#LOC].	$501
5510-0008	Speaker Cast Products SA3501 100W through bumper. Location: [#LOC].	$555
5510-0009	Federal TS100-N speaker mounted on pump panel.	$453
5510-0012	Speaker Federal TS100 through bumper with E-ONE grille. Location: [#LOC].	$532
5510-0013	Speaker Federal Dynamax MS100-EF thru bumper. Location: [#LOC].	$532
5510-0016	Code 3 PB100C electronic siren speaker recessed in front bumper. Location: [#LOC].	$522
5510-0017	Speaker Cast Products SA2403 100W thru bumper. Location: [#LOC].	$501
5510-0018	Whelen SA122FMP electronic siren speaker recessed in front bumper. Location: [#LOC].	$551
5510-0019	University Sound speaker model MIS8C with seperate on / off switch. Locate on driver side upper module area with wire terminating in the center overhead console.	$336
5510-0021	Speaker Federal TS100-N mounted on driver side front compartment face.	$453
5510-0023	Speaker Atkinson Dynamics (Federal) mounted on pump panel.	$610
5510-0026	Code 3 FM100C electronic siren speaker recessed in front bumper. Location: [#LOC].	$601
5510-0027	Speaker volume control on pump panel for pump panel mtd speaker. Locate next to speaker. Includes 16-18 gauge audio cable run from volume control to center overhead area, leave a 30" coil of wire.	$432
5510-0029	Speaker, Federal Signal Dynamax ES100 with "E-ONE" grille through bumper. Location: [#LOC].	$532
5510-0031	Whelen SA314P electronic siren speaker recessed in front bumper with polished trim ring. Location: [#LOC].	$742
5510-0038	Speaker Federal Dynamax ES100 with "E-ONE" grille. Located Driver side recess behind pump panel.	$578
5510-0041	Speaker, Federal Signal Dynamax ES100. Location: [#LOC].	$532
5510-0042	Speaker Atkinson Dynamics (Federal) model AD-SF-25 flush mounted with volume controls. Location: [#LOC].	$674
5510-0045	Speaker, Federal Signal Dynamax ES100 with "E-ONE" grille. Location: [#LOC].	$532
5510-0046	Speaker Federal BP100 mounted through bumper. Location: [#LOC].	$729
5510-0047	Speakers (Pair), Federal Signal Dynamax ES100 through bumper with smooth plate grille painted same color as the heavy duty bumper and sufficient surface area for lettering. Locate both speakers next to each other center of the bumper with one common grill covering them.	$1,260
5550-0006	Whelen LED 6/2/2 lower level warning light package. Includes (6) 600 series (2) 400 series and (2) 500 series light heads w/weatherproof connectors. Locate side facing lights: [#LOC].	$3,156
5550-0007	Whelen LED 8/2 lower level warning light package. Includes (8) 600 series and (2) 500 series light heads w/weatherproof connectors. Locate side facing lights: [#LOC].	$3,399
5550-0008	Whelen strobe/LED 6/2/2 lower level warning light package. Includes (6) 600 series strobes, (2) 400 series strobes and (2) 500 series LED light heads w/weatherproof connectors and required power supplies. Locate side facing lights: [#LOC].	$3,045
5550-0010	Whelen 600 series LED lower level warning light package. Includes (10) LED light heads w/weatherproof connectors. Locate side facing lights: [#LOC].	$3,738
5550-0011	Whelen 600 series strobe lower level warning light package. Includes (8) strobe lights w/weatherproof connectors and required power supplies. Locate per NFPA 1901.	$2,643
5550-0012	Whelen 600 series strobe lower level warning light package. Includes (10) strobe lights w/weatherproof connectors and required power supplies. Locate side facing lights: [#LOC].	$3,517
5550-0013	Federal Signal strobe/halogen lower level warning light package. Includes (8) strobe, (2) GH1F halogen lts and required power supplies. Locate side facing lights: [#LOC].	$2,969
5550-0014	Federal Signal GS5 strobe lower level warning light package. Includes (10) Lights and required power supplies. Locate side facing lights: [#LOC].	$3,388

5550-0021	Federal Signal GL5 LED lower level warning light package. Includes Ten (10) GL5-R lights. Locate side facing lights: [#LOC].	$2,711
5550-0028	Code3 strobe/halogen 6/4 lower level warning light package. Includes (6) 40 series strobe lights and (4) OL135 halogen lights and required power supplies. Locate side facing lights: [#LOC].	$4,585
5550-0029	Code3 halogen 4/6 lower level warning light package. Includes Includes (6) 41 series and (4) OL135 halogen lights. Locate side facing lights: [#LOC].	$2,304
5550-0030	Code3 model 65 red LED lower level warning light package. Includes (10) LED lights. Locate side facing lights: [#LOC].	$3,950
5550-0049	Code3 LED 6/2/2 lower level warning light package. Includes (8) model 65 red LED and (2) LXEX1F-R LED lights. Includes chrome bezels where applicable. Locate side facing lights: [#LOC].	$3,126
5550-0052	Flash rate for Federal LED lower level warning lights to be set at pattern 2, (102 TFPM).	$88
5550-0053	Flash rate for Federal LED lower level warning lights to be set at pattern 8, (150 FPM).	$88
5550-0054	Whelen 600 series Super LED lower level warning light package. Includes (10) red LED light heads w/chrome flanges. Locate side facing lights: [#LOC].	$2,968
5550-0055	Federal Signal QuadraFlare LED lower level warning light package. Includes (10) QL64XF-R LED light heads with bezels. Locate side facing lights: [#LOC].	$2,482
5550-0059	Whelen Super LED lower level warning light package. Includes (8) red 600 LED light heads and (2) red 500 LED light heads w/chrome flanges. Locate side facing lights: [#LOC].	$2,804
5550-0060	Code3 LED 6/2/2 lower level warning light package. Includes (4) 65BZR, (2) 65FR, (2) 85BZR low on rear and (2) LXEX1F-R. Locate side facing lights: [#LOC]	$3,461
5550-0066	Tomar lower level warning light package. Includes RECT-46 LED in front quad bezels (to alternate flash, drv side blue, ofc side red), RECT-79SS on ends of bumper gravel shield (clear frt, red rear) in angled forward bezel, RECT-37SS on side of cab down low just ahead of rear cab doors and in rear ww offset forward (red frt/ blue rear), RECT-25 LED (red) in rubrail side facing at rear of body, RECT-46 LED (drv side blue / ofc side red) rear facing down low, three 780-1228-WP power supplies, 930DM-LED-LB flasher for frt lts, and chrome flanges on applicable lts.	$7,403
5550-0067	Flash rate for Federal QuadraFlare LED lower level warning lights to be set at pattern 4, (75 QFPM).	$88
5550-0069	Flash rate for Federal QuadraFlare LED lower level warning lights to be set at pattern 5, (150 DFPM).	$88
5550-0070	Whelen LED lower level NFPA warning light package (includes upper rear compartment face mounted lights that are wired into lower level switching). Includes (14) lights (8/6).	$4,901
5550-0072	Whelen 600 series Super LED lower level warning light package. Includes (8) red/amber and (2) red LED light heads w/chrome flanges. Locate side facing lights: [#LOC].	$3,345
5550-0073	Whelen Super LED lower level warning light package. Includes (8) 600 Super LED light heads and (2) 900 Super LED light heads w/chrome flanges where applicable. Locate side facing lights: [#LOC].	$3,266
5550-0074	Whelen Super LED 4/2/2/2 lower level warning light package. Includes (4) 600, (2) 900 split, (2)700 split and (2) 500 LED light heads w/weatherproof connectors. Locate side facing lights: at forward most position (900), centered in rear wheelwell (700), and in rubrail (500) side facing at rear of body.	$4,317
5550-0077	Federal Signal QuadraFlare LED upper level side warning light package. Includes (4) QL64XF red LED light heads with bezels. Located 2 side facing on Driver and Officer side upper rear corners.	$1,196
5550-0083	Federal Signal QuadraFlare LED upper level rear warning light package. Includes (2) QL64XF red LED light heads with bezels. Located (1) driver and (1) officer upper rear corners.	$600
5550-0086	Whelen 900 series Super LED upper level side warning light package. Includes (2) red Whelen 900 Super LED model 90RR5FRR lights. Includes weatherproof connectors. Located (1) on the driver and (1) on the officer side upper rear side corners.	$1,094
5550-0088	Whelen 900 series Super LED upper level rear panel warning light package. Includes (2) red Whelen 900 Super LEDs lights, model 90RR5FRR. Includes weatherproof connectors. Located (1) driver and (1) officer upper rear corners.	$1,094
5550-0091	Whelen strobe/LED 6/2/2 lower level warning light package. Includes (6) 600 series strobes, (2) 700 series strobes and (2) 500 series LED light heads w/weatherproof connectors and required power supplies. Locate side facing lights: [#LOC].	$3,112
5550-0092	Whelen strobe/LED 6/2/2 lower level warning light package. Includes (6) 600 series super LED, (2) 700 series split lens strobes and (2) 500 series super LED light heads w/weatherproof connectors and required power supplies. Locate side facing lights: [#LOC]	$3,549
5550-0093	Whelen Super LED lower level warning light package. Includes (6) 600 LED red light heads, (2) 400 LED red light heads and (2) 500 red LED light heads w/chrome flanges. Locate side facing lights: [#LOC]	$2,675
5550-0094	Federal Signal strobe lower level warning light package. Includes (8) GS5 strobes and (2) GS2 strobes lts. All lenses to be blue except mid-body which are red. Locate side facing lights: [#LOC]	$3,388
5550-0095	Whelen Super LED lower level warning light package. Includes (7) 600 red LED light heads, and (3) 600 blue LED light head w/chrome flanges. Locate side facing lights: [#LOC]	$2,968
5550-0096	Weldon Diamondback V46 LED lower level warning light package. Includes (10) red LED light heads w/chrome flanges. Locate side facing lights: [#LOC].	$3,014
5550-0097	Whelen 400 series linear Super LED lower level warning light package. Includes (10) red LED light heads w/chrome flanges. Locate side facing lights: [#LOC].	$4,538
5550-0099	Whelen Super LED lower level warning light package. Includes (4) red 600 LED light heads, (4) red/clear 600 split LED light heads and (2) red 500 LED light heads w/chrome flanges. Locate side facing lights: [#LOC].	$3,727

5550-0100	Whelen Super LED lower level warning light package. Includes (6) red 600 LED light heads and (4) red 500 LED light heads w/chrome flanges. Locate side facing lights: [#LOC].	$2,804
5550-0101	Whelen Super LED lower level warning light package. Includes (6) 600 red LED light heads, (2) 900 red LED light heads and (2) 500 red LED light heads w/chrome flanges. Locate side facing lights: [#LOC].	$2,947
5550-0102	Whelen Super LED lower level warning light package. Includes (6) 600 LED light heads, (2) 900 LED light heads and (2) 500 LED light heads w/chrome flanges. Locate side facing lights: [#LOC].	$2,947
5550-0103	Whelen Super LED lower level warning light package. Includes (8) 600 Super LED light heads and (4) 500 Super LED light heads w/chrome flanges where applicable. Locate side facing lights: [#LOC].	$3,867
5550-0104	Whelen 600 series Super LED lower level warning light package. Includes (8) red and (2) red/white LED light heads w/chrome flanges. Locate side facing lights: [#LOC].	$3,462
5550-0106	Whelen Super LED lower level warning light package. Includes (6) 600 red LED light heads, (2) 400 amber LED light heads and (2) 500 red LED light heads w/chrome flanges. Locate side facing lights: [#LOC].	$2,675
5550-0107	Whelen Super LED lower level warning light package. Includes (8) red 600 LED light heads and (2) red 500 LED light heads w/chrome flanges. Locate side facing lights: [#LOC].	$2,804
5550-0109	Federal Signal QuadraFlare LED lower level warning light package. Includes (5) QL64XF-R LED light heads with bezels and (5) QL64XF-B LED light heads with bezels. Lights to alternate red/blue around unit; see specificaton. Locate side facing lights: [#LOC].	$2,482
5550-0110	Whelen Super LED lower level warning light package. Includes (4) red 600 LED light heads, (4) blue 600 LED light heads, (1) red 500 LED light head and (1) blue 500 LED light head. LIghts to alternate red/blue around unit; see specification. Locate side facing lights: [#LOC].	$2,804
5550-0112	Federal Signal QuadraFlare LED upper level side warning light package. Includes (2) QL97XF red LED light heads with bezels. Located (1) side facing on Driver and Officer side upper rear corners.	$864
5550-0113	Federal Signal QuadraFlare LED upper level rear warning light package. Includes (2) QL97XF red LED light heads with bezels. Located (1) Driver and (1) Officer upper rear corners.	$864
5550-0114	Weldon Diamondback V46 LED lower level warning light package. Includes (10) red LED light heads w/clear lenses and chrome flanges. Locate side facing lights: [#LOC].	$3,014
5550-0117	Whelen Super LED lower level warning light package. Includes (6) 600 Super LED light heads (2 red forward/2 red rearward/2 amber rearward) and (6) side facing 500 Super LED red light heads w/chrome flanges where applicable. Requires additional side facing lights midship to meet blocking mode. Locate side facing lights: [#LOC].	$3,825
5550-0123	Whelen M6 Super LED lower level warning light package. Includes (8) red M6R LED light heads and (2) red 500 Super LED light heads w/chrome flanges. Locate side facing lights: [#LOC].	$3,124
5550-0125	Whelen M6RC Super LED lower level warning light package. Includes (8) red M6RC LED light heads and (2) red 500 Super LED light heads w/chrome flanges and clear lenses. Locate side facing lights: [#LOC].	$3,124
5550-0127	Federal Signal QuadraFlare LED lower level warning light package. Includes (10) QL64XFC-R LED light heads with clear lenses and bezels. Locate side facing lights: [#LOC].	$2,482
5550-0129	Whelen 600 series Super LED lower level warning light package. Includes (5) red LED light heads w/chrome flanges and (5) blue LED light heads w/chrome flanges. LIghts to alternate red/blue around unit; see specification. Locate side facing lights: [#LOC].	$2,968
5550-0130	Weldon Diamondback V46W-C/V26W-C LED lower level warning light package. Includes (8) red V46 LED light heads w/clear lenses and (2) red V26 LED light heads w/clear lenses. Locate side facing lights: [#LOC].	$2,911
5550-0131	Whelen Super LED lower level warning light package. Includes (8) 600 LED light heads (7 red,1 blue rear facing officer side) and (2) red 500 LED light heads w/chrome flanges. Locate side facing lights: [#LOC].	$2,804
5550-0132	Whelen Super LED lower level warning light package. Includes (8) red 600 LED light heads and (2) red TIR3 LED light heads grommet mounted. Locate side facing lights: [#LOC].	$2,671
5550-0135	Whelen Super LED lower level warning light package with clear lenses. Includes (6) red 600 LED light heads, (2) red/clear 600 split LED light heads (side facing forward position) and (2) red 500 LED light heads w/chrome flanges. Locate side facing lights: [#LOC].	$3,445
5550-0147	Whelen Super LED lower level warning light package with clear lenses. Includes (4) 600 LED light heads (2-red, 2-blue), (4) 900 LED light heads (2-red, 2-blue) and (2) 500 TIR6 LED light heads (1-red, 1-blue) w/chrome flanges. Locate side facing lights: [#LOC].	$3,571
5550-0148	Whelen M6 Super LED lower level warning light package. Includes (6) red M6RC LED light heads with clear lenses and chrome flanges, (4) split red/clear M6D light heads with clear lenses and chrome flanges. See specifications for locations of split lights. Locate side facing lights: [#LOC].	$3,567
5550-0149	Whelen M6 Super LED lower level warning light package. Includes (10) red M6R LED light heads w/chrome flanges. Locate side facing lights: [#LOC].	$3,518
5550-0152	Federal Signal QuadraFlare LED lower level warning light package. Includes (8) QL64XF-R red LED light heads with bezels and (2) forward facing QL64SFC-RC split red/clear LED light heads with bezels. Locate side facing lights: [#LOC].	$2,575
5550-0153	Whelen M series Super LED lower level warning light package with clear lenses. Includes (4) M6 LED light heads (2-red, 2-blue), (4) M9 LED light heads (2-red, 2-blue) and (2) 500 TIR6 LED light heads (1-red, 1-blue) w/chrome flanges. Locate side facing lights: [#LOC].	$3,848
5550-0154	Whelen M6 Super LED lower level warning light package. Includes (1) red M6RC LED light head with clear lens and chrome flange, (1) blue M6BC with clear lens and chrome flange and (8) split red/clear M6D light heads with clear lenses and chrome flanges. Locate side facing lights: [#LOC].	$3,819

5550-0155	Whelen Super LED lower level warning light package with clear lenses. Includes (8) 600 LED light heads (6 red,2 blue; (1) forward and (1) rearward facing officer side) and (2) red 500 LED light heads w/chrome flanges. Locate side facing lights: [#LOC].	$2,804
5550-0159	Whelen M6 Super LED lower level warning light package. Includes (6) M6RC red LED light heads with clear lenses, (2) M9RC red LED light heads with clear lenses and (2) red 500 Super LED light heads w/chrome flanges and clear lenses. Locate side facing lights: [#LOC].	$4,014
5550-0163	Whelen M6 Super LED lower level warning light package. Includes (8) red/blue M6J LED light heads and (2) red/blue 500 Super LED light heads w/chrome flanges and clear lenses. Locate side facing lights: at forward most position, in rear wheelwell offset to front, and side facing at rear of body in rubrail if equipped.	$3,474
5550-0164	Whelen 600 series Super LED lower level warning light package. Includes (10) red LED light heads w/clear lenses and chrome flanges. Locate side facing lights: [#LOC].	$2,968
5550-0169	Federal Signal QuadraFlare LED lower level warning light package. Includes (10) QL64XF-B blue LED light heads with bezels. Locate side facing lights: [#LOC].	$2,482
5550-0170	Whelen Super LED lower level warning light package. Includes (8) 600 Series (4) red & (4) blue, (2) 400 Series (1) red & (1) blue and chrome flanges alternating in colors. Locate side facing lights: at forward most position, in rear wheelwell offset to front, and on tailboard mounted light box above rear tailboard. Lights will alternate color from light to light. All lights will have clear lenses with colored LEDs.	$2,968
5550-0171	Whelen Super LED lower level warning light package. Includes (4) red 600 LED light heads, (4) blue 600 LED light heads, (1) red 500 LED light head and (1) blue 500 LED light head. Lights to be driver side red, officer side blue; see specification. Locate side facing lights: [#LOC].	$2,804
5550-0173	Whelen M6 Super LED lower level warning light package. Includes (8) red M6R LED light heads and (2) red M2R LED light heads. Locate side facing lights: [#LOC].	$3,124
5550-0178	Whelen Super LED lower level warning light package with clear lens. Includes (8) red 600 LED light heads and (2) red 500 LED light heads w/chrome flanges. Locate side facing lights: [#LOC].	$2,804
5550-0180	Whelen M6 Super LED lower level warning light package. Includes (10) red M6 LED light heads w/clear lenses and chrome flanges. Locate side facing lights: [#LOC].	$3,518
5550-0181	Whelen Super LED lower level warning light package with clear lenses. Includes (8) red/clear M6 split LED light heads and (2) split red/clear M2 LED light heads w/chrome flanges. State of Maryland only. Locate side facing lights: [#LOC].	$3,853
5550-0183	Whelen M6 Super LED lower level warning light package. Includes (8) red M6R LED light heads and (2) red TIR3 LED light heads. Locate side facing lights: [#LOC].	$3,124
5550-0188	Whelen M6 Super LED lower level warning light package. Includes (6) red M6R and (4) blue M6B LED light heads w/chrome flanges. See specifications for color locations. Locate side facing lights: [#LOC].	$3,518
5550-0189	Whelen Super LED lower level warning light package. Includes (7) red 600 LED light heads, (1) blue 600 LED light heads and (2) red 500 LED light heads. Locate side facing lights: [#LOC].	$2,804
5550-0190	Federal Signal QuadraFlare LED lower level warning light package. Includes (5) QL64XF-R LED light heads with bezels and (5) QL64XF-B LED light heads with bezels. Lights to alternate red/blue around unit; see specificaton. Locate side facing lights: [#LOC].	$2,482
5550-0191	Weldon Diamondback V46/V79 LED lower level warning light package. Includes (8) red V46 LED light heads w/clear lenses and (2) red V79 LED light heads w/clear lenses. Locate side facing lights: [#LOC].	$3,537
5550-0192	Federal Signal QuadraFlare LED lower level warning light package. Includes (8) QL64XF-R LED light heads with bezels and (2) IMPAXX LED model IPX302-4 light heads. Locate side facing lights: [#LOC].	$2,224
5550-0194	Federal Signal QuadraFlare LED lower level warning light package. Includes (4) QL64XF-R LED light heads, (4) QL64XF-B LED light heads, (1) IMPAXX LED model IPX302-3 light head and (1) IMPAXX LED model IPX302-4 light head. Lights to alternate red/blue around unit; see specification. Locate side facing lights: [#LOC].	$2,264
5550-0197	Weldon Diamondback LED lower level warning light package. Includes (4) red V46 LED light heads w/clear lenses, (4) red V79 LED light heads w/clear lenses and (2) red V26 LED light heads w/clear lenses. Locate side facing lights: [#LOC].	$3,959
5550-0208	Federal Signal QuadraFlare LED lower level warning light package. Includes (4) QL64XF-R LED light heads with bezels (chrome) and (8) IMPAXX LED model IPX302-4 light heads with bezels (chrome). Locate side facing lights: [#LOC].	$2,415
5550-0210	Federal Signal QuadraFlare LED lower level warning light package. Includes (8) Quadraflare light heads, (7) QL64XF-R (red) LED lights and (1) QL64XF-B (blue) LED light with bezels and (2) IMPAXX LED model IPX302-4 light heads. Locate side facing lights: [#LOC].	$2,224
5550-0211	Whelen Super LED lower level warning light package with clear lenses. Includes (8) 600 LED light heads (4 red driver's side, 4 blue officer's side) and (2) 500 LED light heads (1 red driver's side, 1 blue officer's side)w/chrome flanges. Locate side facing lights: [#LOC].	$2,804
5550-0212	Whelen 900 series Super LED upper level rear panel warning light package. Includes (2) Whelen 900 Super LED lights with clear lens. (1) red model 90RRF5CR driver's side and (1) blue model 90BBF5CR officer's side. Includes weatherproof connectors. Located upper rear corners.	$1,094
5550-0214	Whelen Super LED lower level warning light package with clear lens. Includes (7) red 600 LED light heads, (1) blue 600 LED light heads and (2) red 500 LED light heads. Locate side facing lights: [#LOC].	$2,804
5550-0215	Whelen 900 series Super LED upper level side warning light package with clear lens. Includes (2) red Whelen 900 Super LED lights. Includes weatherproof connectors. Located (1) on the driver and (1) on the officer side upper rear body panels.	$1,094

5550-0216	Whelen 900 series Super LED upper level rear panel warning light package with clear lens. Includes (1) red, (1) blue Whelen 900 Super LEDs lights. Includes weatherproof connectors. Located (1) red on driver and (1) blue on officer upper rear corners.	$1,094
5550-0223	Whelen 900 series Super LED upper level side warning light package. Includes (2) red Whelen 900 Super LED model 90RRF5RR lights. Includes weatherproof connectors. Located (1) on the driver and (1) on the officer side upper forward side corners.	$1,094
5550-0225	Whelen M6 Super LED lower level warning light package. Includes (8) red M6RC LED light heads with clear lens and (2) red M2RC LED light heads with clear lens. Locate side facing lights: [#LOC].	$3,124
5550-0227	Whelen M6/M7/600/IONWR Super LED lower level warning light package. Includes (2) red M6R LED light heads, (4) split red/clear M7D light heads, (2) 600 Series Super LED light heads, Red with clear lenses and (2) red IONWR LED light heads. See specification for location of split lights. Locate side facing lights: [#LOC].	$3,683
5550-0234	Whelen M6RC Super LED lower level warning light package. Includes (8) red M6RC LED light heads and (2) red 500 Super LED light heads w/chrome flanges and clear lenses. Locate side facing lights: [#LOC].	$3,124
5550-0236	Whelen M6 Super LED lower level warning light package. Includes (6) red M6R LED light heads, (2) blue M6B LED light heads (1 officer front and 1 officer rear facing) and (2) red M2R LED light heads. Locate side facing lights: [#LOC].	$3,124
5550-0238	Federal Signal QuadraFlare LED lower level warning light package. Includes (3) QL64XF-R LED light heads, (3) QL64XF-B LED light heads, (2) IMPAXX LED model IPX302-3 light head and (2) IMPAXX LED model IPX302-4 light head. Lights to alternate red/blue around unit; see specification. Locate side facing lights: [#LOC].	$2,264
5550-0240	Whelen Super LED lower level warning light package. Includes (8) red 600 LED light heads and (2) red 500 LED light heads w/chrome flanges. Locate side facing lights: [#LOC].	$2,804
5550-0241	Whelen M6 Super LED lower level warning light package. Includes (6) M6R red LED light heads, (2) M9R red LED light heads and (2) red M2R red Super LED light heads. Locate side facing lights: [#LOC].	$4,014
5550-0242	Whelen Super LED lower level warning light package. Includes (8) 600 LED light heads (6) Red/Blue (2) Red /White with clear lenses and (2) red 500 LED light heads with clear lenses and chrome flanges. Locate side facing lights: [#LOC].	$3,170
5550-0245	Whelen Super LED lower level warning light package. Includes (4) red 600 LED light heads, (4) blue 600 LED light heads, (1) red 500 LED light head and (1) blue 500 LED light head all with clear lenses. Lights to be driver side blue, officer side red; see specification. Locate side facing lights: [#LOC].	$2,804
5550-0248	Federal Signal QuadraFlare LED lower level warning light package with clear lenses. Includes (8) QL64XFC-R LED light heads with bezels and (2) IMPAXX LED model IPX300-4 light heads. Locate side facing lights: [#LOC].	$2,224
5550-0249	Whelen M6 Super LED lower level warning light package. Includes (5) red M6R LED light heads, (2) M6J split red/blue LED light heads, (1) blue M6B LED light head (officer front) and (2) red M2R LED light heads. Locate side facing lights: [#LOC].	$3,538
5550-0251	Whelen 600 series Super LED lower level warning light package. Includes (10) LED light heads w/chrome flanges. (5) Red, (5) blue alternating. Locate side facing lights: [#LOC].	$2,968
5550-0252	Whelen 600 series Super LED lower level warning light package. Includes (8) red LED light heads with clear lenses and (2) split red/blue LED light heads with clear lenses. Locate side facing lights: [#LOC].	$3,019
5550-0254	Whelen M6 Super LED lower level warning light package. Includes (4) red M6RC LED light heads with clear lenses and chrome flanges, (4) split red/clear M6D light heads with clear lenses and chrome flanges and (2) red M2RC LED light heads. See specifications for locations of split lights. Locate side facing lights: [#LOC].	$3,541
5550-0255	Whelen 900 series Super LED upper level rear panel warning light package with clear lens. Includes (2) red Whelen 900 Super LEDs lights, model 90RR5FCR. Includes weatherproof connectors. Located (1) driver and (1) officer upper rear corners.	$1,094
5550-0256	Federal Signal QuadraFlare LED upper level rear warning light package. Includes (2) QL97XF (1) blue and (1) red LED light heads with bezels. Located (1) blue on the driver and (1) red on the officer side of upper rear corners.	$864
5550-0257	Whelen M6 Super LED lower level warning light package. Includes (10) red/blue M6J LED light heads w/chrome flanges and clear lenses. Locate side facing lights: [#LOC].	$3,474
5550-0258	Whelen M6 Super LED lower level warning light package. Includes (4) red M6R LED light heads, (4) blue M6B LED light heads, (1) red M2R LED light head and (1) blue M2B LED light head. Driver side red, officer side blue. Locate side facing lights: [#LOC].	$3,124
5550-0260	Federal Signal QuadraFlare LED lower level warning light package. Includes (4) QL64XF-R LED light heads, (4) QL64XF-B LED light heads, (1) IMPAXX LED model IPX302-3 light head and (1) IMPAXX LED model IPX302-4 light head. Lights to alternate red/blue around unit; see specification. Locate side facing lights: [#LOC].	$2,264
5550-0261	Whelen M6 Super LED lower level warning light package. Includes (10) M6RC red LED with clear lens light heads w/chrome flanges. Locate side facing lights: [#LOC].	$3,518
5550-0262	Whelen M6 Super LED lower level warning light package. Includes (10) blue M6B LED light heads w/chrome flanges. Locate side facing lights: [#LOC].	$3,518
5550-0264	Power Arc LED 4/2/2/2 red/white/blue/yellow lower level warning light package. Includes (4) P14SM, (2) M90DHL (1-WR, 1-BW), (2)M90FK and (2) LED210. See specifications for exact locations and colors. Locate side facing lights: [#LOC].	$5,619

5550-0265	Whelen M6 Super LED lower level warning light package. Includes (4) red M6R LED light heads, (4) blue M6B LED light heads, (1) red M2R LED light head and (1) blue M2B LED light head. Alternate red/blue around unit. Locate side facing lights: [#LOC].	$3,124
5550-0266	Federal Signal QuadraFlare LED lower level warning light package. Includes (6) QL64XF-R LED light heads with bezels, (2) QL64SFC-WR and (2) IMPAXX LED model IPX302-4 light heads. Locate side facing lights: [#LOC].	$2,844
5550-0267	Whelen Super LED lower level warning light package. Includes (8) red 600 LED light heads and (2) red 500 LED light heads w/chrome flanges. Locate side facing lights: [#LOC].	$2,804
5550-0269	Federal Signal QuadraFlare LED lower level warning light package. Includes (5) QL64XF-R LED light heads with bezels, (3) QL64XF-B LED light heads with bezels and (2) QL64XF-A LED light heads with bezels. Lights to located as per specificaton. Locate side facing lights: [#LOC].	$2,482
5550-0270	Federal Signal Impaxx LED lower level body warning light package. Includes (6) Impaxx LED light heads with bezels located (1) each side below the forward body compartment (offset forward), (1) each side below the rearward body compartments (offset rearward) and (1) each side on rear of body down low below the taillights (offset outboard).	$624
5550-0271	Whelen Super LED lower level body warning light package. Includes (6) LIN3 light heads located (1) each side below the forward body compartment (offset forward), (1) each side below the rearward body compartments (offset rearward) and (1) each side on rear of body down low below the taillights (offset outboard).	$545
5550-0274	Federal Signal QuadraFlare LED lower level warning light package. Includes (7) QL64XF-R LED light heads, (1) QL64XF-G light head and (2) IMPAXX LED model IPX302-4 light heads. Locate side facing lights: [#LOC].	$2,487
5550-0275	Whelen M6 Super LED lower level warning light package. Includes (6) red M6R LED light heads and (4) red M2R LED light heads. Locate side facing lights: [#LOC].	$2,975
5550-0276	Code3 LED 6/2/2 lower level warning light package. Includes (8) model 65 red LED and (2) LXEX1F red LED lights all with clear lenses. Includes chrome bezels where applicable. Locate side facing lights: [#LOC].	$3,126
5550-0277	Federal Signal QuadraFlare LED lower level warning light package with clear lenses. Includes (8) QL64XFC-R red LED light heads with bezels and (2) IMPAXX LED model IPX600-B blue light heads. Locate side facing lights: [#LOC].	$2,285
5550-0278	Federal Signal QuadraFlare LED lower level warning light package. Includes (7) QL64XF-R LED, (1) QL64XF-B LED light head with bezel (driver rear facing), and (2) IMPAXX LED model IPX302-4 light heads. Locate side facing lights: at forward most position, centered in rear wheel well, and side facing at rear of body in rubrail if equipped.	$2,224
5550-0280	Federal Signal QuadraFlare LED lower level warning light package. Includes (8) QL64XF-B LED light heads with bezels and (2) IMPAXX LED model IPX302-3 light heads. Locate side facing lights: [#LOC].	$2,224
5550-0281	Whelen M6 Super LED lower level warning light package. Includes (6) red M6R LED light heads, (2) red 600 LED light heads and (2) red TIR3 LED light heads. Locate side facing lights: [#LOC].	$2,984
5550-0282	Whelen M6 Super LED lower level warning light package. Includes (8) red M6R and (2) blue M6B LED light heads w/chrome flanges. See specifications for color locations. Locate side facing lights: [#LOC].	$3,518
5550-0283	Code3 LED 8/2 red/blue lower level warning light package. Includes (8) model 65 LED and (2) LXEX1F LED lights. See specification for exact locations. Includes chrome bezels where applicable. Locate side facing lights: [#LOC].	$3,126
5550-0285	Whelen M6 Super LED lower level warning light package. Includes (7) red M6R LED light heads, (1) green M6G and (2) red M2R LED light heads. Locate side facing lights: [#LOC].	$3,173
5550-0286	Federal Signal QuadraFlare LED lower level warning light package with clear lenses. Includes (6) QL64SFC-RR LED light heads with bezels, (2) QL64SFC-WR and (2) IMPAXX LED model IPX300-4 light heads. See specification for exact locations. Locate side facing lights: [#LOC].	$2,949
5550-0287	Whelen Super LED lower level warning light package. Includes (6) red M6R LED light heads, (2) red 600 LED light heads and (2) red M2R LED light heads. Locate side facing lights: [#LOC].	$3,124
5550-0288	Whelen Super LED lower level warning light package. Includes (6) 600 LED light heads; (3) red/(3) blue, (2) 900 LED light heads; (1) red/(1) blue and (2) 500 LED light heads; (1) red/(1) blue w/chrome flanges. See specifications for exact locations of lights. Locate side facing lights: [#LOC].	$2,947
5550-0289	Whelen M6/M7/M2/M9 Super LED lower level warning light package with clear lenses. Includes (2) red M6RC LED light heads, (4) red M7RC light heads, (2) red M2RC LED light heads and (2) red M9RC LED light heads. See specification for exact locations lights. Locate side facing lights: [#LOC].	$3,652
5550-0290	Whelen M6 Super LED lower level warning light package. Includes (6) red M6RC LED light heads, (2) split red/amber M6K light heads and (2) red M2RC LED light heads. Locate side facing lights: [#LOC].	$3,449
5550-0291	Whelen Super LED lower level warning light package. Includes (6) red M6RC LED light heads with clear lenses, (2) red 600 LED light heads with clear lenses and (2) red M2RC LED light heads with clear lenses. Locate side facing lights: [#LOC].	$3,124
5550-0292	Whelen M6 Super LED lower level warning light package. Includes (8) red M6RC LED light heads with clear lens and (2) red TIR3 LED light heads. Locate side facing lights: [#LOC].	$3,046
5550-0293	Whelen Super LED lower level warning light package with clear lenses. Includes (8) red 600 LED light heads and (2) red TIR3 LED light heads grommet mounted. Locate side facing lights: [#LOC].	$2,671
5550-0295	Whelen M6 Super LED lower level warning light package. Includes (6) red M6RC LED light heads, (2) red 6RBRC Rota-Beam LED and (2) red M2RC LED light heads with clear lenses. Locate side facing lights: [#LOC].	$3,693

5550-0297	Whelen M series Super LED lower level warning light package. Includes (4) M6R red LED light heads, (4) M9 (2 red, 2 amber) LED light heads and (2) red M2R red Super LED light heads. Locate side facing lights: [#LOC].	$3,978
5550-0298	Whelen M6 Super LED lower level warning light package. Includes (6) M6RC red LED light heads, (2) M9 (1 red, 1 blue) LED light heads w/clear lenses and (2) red M2RC red Super LED light heads. Locate side facing lights: [#LOC].	$4,014
5550-0299	Whelen M6 Super LED lower level warning light package. Includes (7) red M6R and (3) blue M6B LED light heads w/chrome flanges. See specifications for color locations. Locate side facing lights: [#LOC].	$3,518
5550-0300	Federal Signal QuadraFlare LED lower level warning light package. Includes (4) QL64XF-R LED light heads with bezels and (6) IMPAXX LED model IPX302-4 light heads with bezels. Locate side facing lights: [#LOC].	$2,064
5550-0301	Whelen LED lower level warning light package with clear lenses. Includes (4) 600 Super LED red light heads with bezels and (6) LIN3 LED red light heads with bezels. Locate side facing lights: [#LOC].	$2,300
5550-0302	Federal Signal QuadraFlare LED lower level cab warning light package. Includes (4) QL64XF-R LED light heads with bezels.	$1,062
5550-0303	Whelen LED lower level cab warning light package with clear lenses. Includes (4) 600 Super LED red light heads with bezels.	$1,250
5550-0304	Whelen M6 Super LED lower level warning light package. Includes (8) red M6R LED light heads and (2) red PSR00FRR Super LED light heads w/chrome flanges. Locate side facing lights: [#LOC].	$3,124
5550-0305	Federal Signal QuadraFlare LED lower level warning light package. Includes (6) QL64XF-R LED light heads with bezels, (2) QL64SFC-WR and (2) IMPAXX LED model IPX302-4 light heads. Locate side facing lights: [#LOC].	$2,844
5550-0306	Whelen Super LED lower level warning light package. Includes (8) red 600 LED light heads and (2) red 500 LED light heads w/black flanges. Locate side facing lights: [#LOC].	$2,804
5550-0307	Whelen M6 Super LED lower level warning light package. Includes (8) red M6RC LED light heads with clear lens and (and (2) red TIR3 LED light heads grommet mounted with clear lenses. Locate side facing lights: [#LOC].	$3,124
5550-0309	Whelen Super LED lower level warning light package. Includes (6) 600 LED light heads, (4 red, 2 blue) and (4) red 500 LED light heads w/chrome flanges. Locate side facing lights: [#LOC].	$2,804
5550-0310	Whelen M6 Super LED lower level warning light package. Includes (6) M6RC red LED light heads, (2) M9RC red LED light heads and (2) red M2RC red Super LED light heads. Locate side facing lights: [#LOC].	$4,014
5550-0311	Whelen M6 Super LED lower level warning light package with clear lenses. Includes (7) red M6RC LED light heads, (1) blue M6BC light head and (2) blue M2BC LED light heads. Locate side facing lights: [#LOC].	$3,124
5550-0312	Whelen M6 Super LED lower level warning light package. Includes (4) M6RC red LED light heads, (2) M9RC red LED light heads and (4) red M2RC red Super LED light heads. Locate side facing lights: [#LOC].	$3,954
5550-0313	Whelen Super LED lower level warning light package with clear lenses. Includes (8) 600 LED light heads (1 red, 7 blue) and (2) blue 500 LED light heads w/chrome flanges. Locate side facing lights: [#LOC].	$2,804
5550-0314	Whelen Super LED lower level warning light package with clear lens. Includes (5) red 600 LED light heads, (3) blue 600 LED light heads and (2) red 500 LED light heads. Locate side facing lights: [#LOC].	$2,804
5550-0315	Power Arc LED 4/4/2 lower level warning light package. Includes 210LED-1B frt dr side, 210LED-2R frt off side, 210LED-2R rr dr side, 210LED-1B rr off side and (4) P14SM; (2) red, (2) blue. Locate side facing lights: [#LOC].	$4,194
5550-0316	Whelen M6 Super LED lower level warning light package. Includes (8) red M6RC LED light heads with clear lens and (2) red PSR00FRR LED light heads. Locate side facing lights: [#LOC].	$3,124
5550-0317	Whelen M6 Super LED lower level warning light package with clear lenses. Includes (4) M6V2 (2 red, 2 blue) LED light heads (4) M6 (2 red, 2 blue) LED light heads and (2) TIR3 (1 red, 1 blue) LED light heads. See specifications for exact locations. Locate side facing lights: [#LOC].	$4,670
5550-0318	Whelen Super LED lower level warning light package. Includes (6) red 600 LED light heads, (2) red M6V2R LED light heads and (2) red 500 LED light heads w/chrome flanges. Locate side facing lights: [#LOC].	$3,705
5550-0320	Whelen Super LED lower level warning light package. Includes (6) red 600 LED light heads. (2) blue 600 LED light heads and (2) red 500 LED light heads w/chrome flanges. Locate side facing lights: [#LOC].	$2,804
5550-0321	Federal Signal QuadraFlare LED lower level warning light package. Includes (6) QL64XF-R LED light heads, (2) QL64XF-B LED (rear facing) light heads and (2) IMPAXX LED model IPX302-4 light heads. Locate side facing lights: [#LOC].	$2,224
5600-0002	Warning light Whelen 600 series strobe (PR) [#COL]. Requires power pack or option with spare power pack outlets. Includes weatherproof connectors. Requires engineering approval for NFPA applications. Location(s): [#LOC]	$442
5600-0005	Warning light Whelen 700 series strobe (PR) [#COL]. Requires power pack or option with spare power pack outlets. Includes weatherproof connectors. Requires engineering approval for NFPA applications. Location(s): [#LOC]	$437
5600-0008	Warning light Whelen 900 series strobe (PR) [#COL]. Requires power pack or option with spare power pack outlets. Includes weatherproof connectors. Requires engineering approval for NFPA applications. Location(s): [#LOC]	$442
5600-0011	Whelen power supply model UPS64LX 4Place 75Watt strobe.	$570

5600-0012	Whelen power supply model ISP148 eight (8) place 140watt strobe.	$1,336
5600-0013	Whelen power supply model ISP188 eight (8) place 180watt strobe.	$1,429
5600-0016	Warning light Whelen 500 series LED (PR) amber. Location: [#LOC] Surface mounted with weatherproof connector. Requires engineering approval for NFPA applications.	$433
5600-0017	Warning light Whelen 500 series LED (PR) red. Surface mounted with weatherproof connector. Location: [#LOC]	$433
5600-0018	Warning light Whelen 500 series LED (PR) blue. Location: [#LOC] Surface mounted with weatherproof connector. Requires engineering approval for NFPA applications.	$745
5600-0020	Warning light Whelen 600 series LED (PR) amber. Location: [#LOC] Surface mounted with weatherproof connector. Requires engineering approval for NFPA applications.	$772
5600-0021	Warning light Whelen 600 series LED (PR) red. Surface mounted with weatherproof connector. Location: [#LOC]	$772
5600-0022	Warning light Whelen 700 series LED (PR) red. Surface mounted with weatherproof connector. Location: [#LOC]	$675
5600-0023	Warning light Whelen 900 series LED (PR) amber. Location: [#LOC] Surface mounted with weatherproof connector. Requires engineering approval for NFPA applications.	$1,396
5600-0024	Warning light Whelen 900 series LED (PR) red. Surface mounted with weatherproof connector. Location: [#LOC]	$1,396
5600-0025	Warning light Whelen 600 series halogen (PR) [#COL]. Includes weatherproof connectors. Requires engineering approval for NFPA applications. Location(s): [#LOC]	$357
5600-0029	Code3 Model 550 rotating (PR) with [#COL] domes. Location: [#LOC].	$382
5600-0030	Code3 Model #550/#41. Includes (2) #550's with red domes and (2) #41 lights with [#COL] lenses. Total four (4) lights at rear upper. Location of Model 550 lights: [#LOC].	$983
5600-0031	Code 3 / PSE Oscilaser warning light (PR). Lights are to be located on front of cab in the inboard position of the quad bezel.	$593
5600-0032	Code3 model #85BZR red LED warning light with chrome bezel (PR). Location: [#LOC]	$1,483
5600-0033	Whelen beacon with halogen rotator and 700 series strobe (PR) Model B6R with red domes and [#COL] strobes. Location [#LOC]. Requires power pack.	$845
5600-0034	Federal model SY12FS Sentry (PR) with [#COL] domes. Location: [#LOC].	$383
5600-0036	Federal model IVP100 Vector pod (PR) with [#COL] domes. Location: [#LOC].	$456
5600-0038	Federal Model IVP200F Vector pod warning light (PR) with [#COL] filters. Location: [#LOC].	$496
5600-0040	Whelen beacon Model RB6PAP (PR) with amber lenses. Located one (1) each side at rear. Location: [#LOC]	$466
5600-0041	Warning light Federal Signal GS2 strobe (PR) [#COL]. Requires power pack or option w/spare power pack outlets. Requires engineering approval for NFPA applications. Location(s): [#LOC].	$426
5600-0046	Warning light Federal Signal GH1F halogen (PR) [#COL]. Location(s): [#LOC]	$320
5600-0048	Warning light Federal Signal GL5 LED (PR) red. Location: [#LOC]	$631
5600-0049	Warning light Federal Signal GS5 strobe (PR) [#COL]. Requires power pack or option w/spare power pack outlets. Requires engineering approval for NFPA applications. Location(s): [#LOC]	$389
5600-0051	Warning light Federal Signal GL5 LED (PR) amber. Location: [#LOC].	$651
5600-0052	Federal Signal SPS4-NFPA (4) place 90 watt strobe power supply. Required when using Federal Signal strobes.	$565
5600-0053	Federal Signal SPS8-NFPA (8) place 192 watt strobe power supply. Required when using Federal Signal strobes.	$1,006
5600-0061	Mars 888 pedestal mounted traffic clearing light on front of cab above grille.	$935
5600-0062	Warning light Roto Ray 200 with red lenses. N/A on commercial chassis. Locate on front of cab center above grille.	$1,615
5600-0063	Warning light Roto Ray 200 with (2) red and (1) clear lenses. N/A on commercial chassis. Locate on front of cab center above grille.	$1,615
5600-0067	Federal Signal Model #100 beacon (PR) with [#COL] domes. Location: [#LOC].	$488
5600-0074	Opticom Emitter 3M #792H. Emitter and control only. Wire through parking brake. Location: [#LOC].	$2,988
5600-0075	Opticom Emitter 3M #592 Chrome. Emitter and dash control only. Wire through parking brake. Location: [#LOC].	$3,550
5600-0078	Whelen Super LED beacon (PR) model L31H with [#COL] domes. Location [#LOC].	$1,846
5600-0079	Whelen beacon with halogen rotator and 700 series LED (PR) Model B6TM with red domes and [#COL] LEDs. Location [#LOC].	$1,398
5600-0080	Whelen beacon with LED upper beacon and 700 series Super LED (PR) model B6LED with red domes and [#COL] LEDs. Location: [#LOC].	$2,828
5600-0081	Code 3 / PSE Oscilaser warning light clear (PR). Lights are to be located on front of cab above quad bezels.	$621
5600-0083	Warning light Code3 LXEX1F-R LED (PR). Surfaced mounted with clear lens. Location: [#LOC]	$703
5600-0085	Tomar strobe preemption emitter with chrome housing. Includes pedestal mount and switch on dash. Wire through parking brake. Location: [#LOC].	$1,459
5600-0086	Whelen beacon model RB6T (PR) with [#COL] domes. Location: [#LOC].	$397
5600-0087	Warning light Code 3 65BZA LED (PR) amber. Surface mounted with bezel. Location: [#LOC]	$568
5600-0088	Warning light Code 3 65BZR LED (PR) Red. Surface mounted with bezel. Location: [#LOC]	$568
5600-0089	Warning Light Code3 model #65BZRW split red/clear LED with chrome bezel (PR). Location: [#LOC].	$745
5600-0090	Warning light Federal Signal QuadraFlare QL64XF LED (PR) red. Surface mounted with bezel. Location: [#LOC].	$600
5600-0092	Opticom Emitter 3M #792HF. Emitter with filter and control only. Wire through parking brake. Location: [#LOC].	$2,988

5600-0093	Whelen beacon with halogen rotator and 700 series scene (PR) Model B6TH*Z1P. Dome color: [#COL]. Location [#LOC].	$1,179
5600-0094	Warning light Federal Signal QL64XF LED (PR) amber. Surface mounted with bezel. Location: [#LOC].	$600
5600-0098	Warning light Whelen 600 series Super LED (PR) amber. Location: [#LOC].	$597
5600-0099	Warning light Whelen 600 series Super LED (PR) red. Location: [#LOC].	$597
5600-0100	Warning light Whelen 600 series Super LED (PR) blue with clear lens. Location: [#LOC].	$597
5600-0101	Whelen beacon with halogen rotator and 700 series LED (PR) Model B6TM with amber dome on driver side, red dome officer side and [#COL] LEDs. Location [#LOC].	$1,398
5600-0105	Hazard (door ajar) light 2" LED. Location: [#LOC].	$35
5600-0106	Warning light Roto Ray LED with (2) red and (1) clear lights. Locate on front of cab center above grille.	$2,743
5600-0107	Warning light Roto-Ray LED with red lenses. Locate on front of cab center above grille.	$2,743
5600-0108	Light Code 3 model 2118-NFPA-2 (PR). Located one each side on rear upper of body.	$1,806
5600-0109	Warning light Whelen 500 series LED (4) red. Surface mounted with weatherproof connector. Flashing lights wired through door ajar. Location: One on each of the interior cab doors (outboard position).	$863
5600-0111	Warning light Whelen 600 series Super LED (PR) white with clear lens. Location: [#LOC].	$676
5600-0112	Warning light Whelen 600 series LED (PR) blue. Surface mounted. Location: [#LOC]	$886
5600-0113	Code 3 Optix 3 LED lights. Locate (1) each side at rear mounted to upper rear warning light brackets. Lights to be amber and switched with the upper rear warning lights.	$626
5600-0114	Tomar RECT-79S (4) two red, two blue and one 780-1228-WP power supply. Includes RECT-79-SMFP chrome bezels. Lights to be located one each side at rear above tail lights (drv side blue, ofc side red) and one each side at rear up high (drv side red, ofc side blue). Lights to flash in an "X" pattern.	$2,117
5600-0115	Tomar RECT-46 LED (PR) one red, one blue. Includes Tomar 930DM-LED-LB flasher and RECT-46LBZ chrome bezels. Locate up high on rear of body just below compartment top (drv side red, ofc side blue). Lights to flash in an "X" pattern with the lower level warning lights.	$983
5600-0117	Whelen Ultra Freedom Micro Edge LED (PR) model MCFLED25 clear lens with red LEDs. Location [#LOC].	$1,919
5600-0118	Warning light Whelen 500 series TIR6 Super LED (PR) red. Surface mounted 5TSMAC bezel with weatherproof connector. Location: [#LOC].	$504
5600-0122	Light Code 3 model 2122NFPA1 (PR) 22.5" long. Red LED with clear lens. Location: one each side on rear body compartment top.	$3,821
5600-0123	Warning light Code 3 LXEX2F-AA LED (PR) amber. Surface mounted with bezel. Location: (1) each side rear compartment face up high	$765
5600-0124	Warning light Code 3 LXEX1F-R LED (PR) red. Surface mounted with bezel. Location: [#LOC]	$695
5600-0125	Code3 model 780 LED flasher. Flasher will control lower level warning lights ipo multiplexing	$1,626
5600-0126	Body Whelen strobe power supply located in R1 on rear wall just below offset.	$119
5600-0128	Warning light Whelen 600 series split Super LED (PR) red/amber. Location: [#LOC]	$774
5600-0129	Warning light Whelen 600 series split Super LED (PR) red/clear. Location: [#LOC].	$833
5600-0130	Whelen model UFM8 LED flasher (PR). Flashers will control lower level warning lights ipo internal flashers. Locate (1) in cab and (1) in body.	$1,100
5600-0131	Light Whelen model PSR00FRR LED (PR) red. Location: [#LOC].	$380
5600-0132	Warning light Federal Signal QL64XF LED (PR). (1) red and (1) green. Location: Red driver and green officer in front quad inboard of NFPA warning light	$800
5600-0133	Warning light Whelen 900 series Super LED model 90RR5FRR (PR) red. Location: [#LOC].	$1,173
5600-0134	Warning light Whelen 600 series LED red/clear. Surface mounted with weatherproof connector(PR). Location: [#LOC]	$776
5600-0136	Federal MicroEscape LED beacon (PR) with [#COL] lenses. Location: [#LOC]. Requires additional upper level warning or Signal Master.	$2,004
5600-0137	Warning light Whelen 700 series Super LED (PR) red/clear. Surface mounted with weatherproof connector. Location: [#LOC]	$785
5600-0138	Warning light Whelen LIN3 series Super LED (PR) red with clear lens. Surface mounted RFLANGCD bezel with weatherproof connector. Location: [#LOC]	$376
5600-0139	Whelen beacon with LED upper beacon and 700 series Super LED (PR) model B6LED with red LEDs/clear domes and [#COL] LEDs/clear lenses. Location: [#LOC].	$2,828
5600-0140	Warning light circuit wiring through chassis reverse. All warning lights.	$76
5600-0142	Warning light Whelen 900 series Super LED model 90RA5FCR (PR) split red (bottom) / amber (top) with clear lenses. Location: [#LOC]	$1,173
5600-0143	Warning lights Whelen 600 series Super LED (PR) red w/clear lens. Location: [#LOC].	$597
5600-0144	Warning light Whelen 500 series TIR6 Super LED (PR) blue. Surface mounted 5TSMAC bezel with weatherproof connector. Location: [#LOC]	$504
5600-0147	Warning light Whelen 600 series LED (PR). Red driver, blue officer surface mounted with weatherproof connector. Location: [#LOC]	$829
5600-0151	Whelen Ultra Freedom Micro Edge LED (PR) (1) driver Model MCFLED25 clear lense with red LEDs and (1) officer MCFLED22 clear lense with blue LEDs. Requires addtional upper level warning lights to meet NFPA. Location: [#LOC].	$2,057
5600-0152	Warning light Whelen 500 series LED (PR) green. Includes switch on pump panel labeled "Ready for Water" Location: (1) centered between grille and windshield on slope, (1) driver side (inside of beavertail if so equipped) up high below hosebed opposite officer discharge.	$770
5600-0153	Warning light Whelen 600 series split Super LED (PR) red/blue driver, red/amber officer. Location: [#LOC].	$774

5600-0154	Warning light Whelen 600 series Super LED (PR). Red driver, blue officer surface mounted with weatherproof connector. Location: [#LOC].	$597
5600-0156	Warning light Federal Signal QL64XF LED (PR) green. Surface mounted with bezel. Location: [#LOC].	$660
5600-0157	Federal Model SY12FS Sentry with green dome. Includes switch on driver overhead. Location: pole mounted center rear cab roof.	$387
5600-0160	Warning light Federal Signal QL97XF LED (PR) red. Surface mounted with bezel (if applicable). Location: [#LOC].	$864
5600-0161	Warning light Federal Signal QL97XF LED (PR) amber. Surface mounted with bezel (if applicable). Location: [#LOC]	$864
5600-0162	Warning light Federal Signal QL64XF LED (PR) blue. Surface mounted with bezel. Location: [#LOC].	$600
5600-0164	Warning light Federal Signal QL64XF LED (PR) white. Surface mounted with bezel. Location: [#LOC].	$694
5600-0165	Warning light Whelen 500 series Super Linear LED (PR) green. Location: [#LOC].	$532
5600-0166	Warning light Whelen 600 series Super LED (PR) green. Location: [#LOC].	$787
5600-0168	Fed QuadraFlare QL97SC-RA Red/Amber split color LED lights located on rear of body up high. Red on top on left side and bottom on right side to simulate "X" pattern. Includes external flasher.	$1,079
5600-0169	Warning light Whelen 900 series Super LED driver side amber / officer side red model 90AA5FAR / 90RR5FRR. Location: [#LOC].	$1,173
5600-0172	Warning light Whelen 900 series Super LED model 90AA5FAR (PR) amber. Location: [#LOC].	$1,173
5600-0173	Federal MicroEscape NFPA compliant LED beacons (PR) clear lenses with [#COL] LED reflectors. Location: [#LOC].	$1,496
5600-0174	Warning light Whelen 900 series Super LED model 90RR5FRR (2) (PR) red. Location: (1) each side rear compartment face up high and (1) each side mounted to the side body towards rear. All wired as part of upper rear warning lights.	$2,413
5600-0176	Mars 888 pedestal mounted traffic clearing lights with clear lenses located one each side of cab above outer quad bezel.	$1,868
5600-0177	Whelen model UFM8 LED flasher (3). Flashers will control warning lights ipo internal flashers. Locate (1) in cab and (2) in body.	$1,650
5600-0181	Warning light Federal Signal Model 360501 LED w/ bezel (PR). Surfaced mounted with blue driver and red officer lenses. Location: [#LOC].	$555
5600-0182	Whelen beacon with LED upper beacon and 700 series Super LED (PR) Model B6LED with amber domes and [#COL] LEDs. Location [#LOC]	$2,828
5600-0183	Warning light Whelen 600 series Super LED (PR). blue driver, green officer surface mounted with weatherproof connector. Location: [#LOC].	$693
5600-0184	Warning light Federal Signal QL64XF LED (PR). (1) red driver, (1) blue officer. Surface mounted with bezel. Location: [#LOC]	$600
5600-0185	Federal Model IVP100 Vector pod (PR) located at the rear cab corners. Driver side to be amber with switch on driver's switch panel and automatically turn off when warning lts are on. Officer side to be blue with switch on driver's switch panel.	$762
5600-0187	Warning light Federal Signal QL97XF LED (PR). (1) red driver, (1) blue officer. Surface mounted with bezel (if applicable). Location: [#LOC].	$864
5600-0189	Federal Intelli model 650205 LED flasher (PR). Flashers will control lower level warning lights ipo internal flashers. Locate (1) in cab and (1) in body.	$872
5600-0190	Warning light Whelen 600 series Super LED (PR). Blue driver, amber officer surface mounted with weatherproof connector. Location: [#LOC].	$597
5600-0191	Whelen beacon with LED upper beacon and 700 series Super LED (PR) Model B6LED with amber driver and red officer domes and [#COL] LEDs. Location [#LOC].	$2,828
5600-0193	Warning light Weldon Diamondback V46W-C00R LED (PR) red w/ clear lenses. Location: [#LOC].	$566
5600-0194	Whelen Super LED beacon Model L11H with amber dome. Includes switch in cab accessible to the driver. Location: center of rear cab roof.	$817
5600-0195	Code3 model XP9501NFPA1 (PR) red LED with clear domes. Location: [#LOC].	$2,030
5600-0196	Fed QuadraFlare QL64SC-RC Red/White split color LED lights in ptd smooth plt alum box above the grille. Red on top on left side and bottom on right side to simulate "X" pattern. Wired to lower zone lighting and switched off with parking brake. Includes ext flasher.	$1,596
5600-0197	Warning light Whelen 600 series Super LED (PR). red driver, green officer surface mounted with weatherproof connector. Location: [#LOC].	$693
5600-0198	Whelen PE215 emitter. Emitter and control only. Wire through parking brake. Location: [#LOC].	$859
5600-0199	Whelen beacon with LED upper beacon and 700 series Super LED (PR) Model B6LED with red driver and blue officer domes and [#COL] LEDs. Location [#LOC].	$2,828
5600-0200	Whelen beacon with LED upper beacon and 700 series Super LED (PR) Model B6LED with red driver and amber officer domes and [#COL] LEDs. Location [#LOC].	$2,828
5600-0201	Warning light Whelen 900 series Super LED model 90RB5FCR (PR) split red / blue with clear lense. Location: [#LOC].	$1,173
5600-0202	Warning light Weldon Diamondback V46W-C00R LED (PR) red w/ clear lenses. Includes diamond plate mounting box. Location: [#LOC].	$913
5600-0205	Warning light Federal Signal GL1F-B LED (PR) blue. Location: [#LOC].	$568
5600-0206	Whelen Micro 400 Super LED (PR) model MC40ED3. Driver side red with red lenses, officer side red side facing with red lenses side and forward; amber rear facing with amber lens. Location [#LOC].	$2,454
5600-0213	Whelen beacon with halogen rotator and 700 series LED (PR) Model B6TM with red dome on driver side, amber dome officer side and [#COL] LEDs. Location [#LOC].	$1,398

5600-0215	Power Arc (PR) Model LED210 yellow with clear lenses. Location: [#LOC].	$1,238
5600-0216	Warning light Whelen M9 series Super LED (PR) red. Location: [#LOC].	$1,352
5600-0217	Power Arc (PR) Model LED210 red with clear lenses. Location: [#LOC].	$1,238
5600-0222	Whelen Super LED beacon Model L31H pole mounted with green dome. Includes switch in officer overhead labeled "Command". Location: center of cab roof to rear of lightbar.	$918
5600-0223	Warning light Code 3 378ABZ LED (PR) amber. Surface mounted with bezel. Location: [#LOC].	$676
5600-0226	Warning light Federal Signal Model 360501-04 LED w/ bezel (PR). Surfaced mounted with red lens. Location: [#LOC].	$397
5600-0227	Warning light Whelen 600 series Super LED (PR). Red driver, blue officer surface mounted with clear lenses and weatherproof connector. Location: [#LOC].	$597
5600-0228	Warning light Whelen 900 series Super LED (PR) with clear lenses. (1) model 90RR5FCR red driver and (1) model 90BB5FCR blue officer. Each light shall have a clear lense w/ colored LEDs. Location: [#LOC].	$1,173
5600-0229	Warning light Whelen 500 series TIR6 Super LED (PR) red driver, blue officer with clear lenses. Surface mounted 5TSMAC bezel with weatherproof connector. Location: [#LOC]	$504
5600-0230	Warning light Whelen 600 series Super LED (PR) blue with blue lens. Location: [#LOC].	$597
5600-0231	Warning light Whelen 600 series Super LED (EA) red. Location: below scene light on driver rear compt face.	$300
5600-0234	Warning light Whelen Dominator series LED model D844000 red driver/blue officer with clear lenses. Location: [#LOC]. Wire through lower level warning.	$899
5600-0235	Hazard (Occupant Detection System) light. Whelen M4 Super LED. Center in overhead console.	$254
5600-0236	Whelen beacon with LED upper beacon and 700 series Super LED (PR) model B6LED with blue driver and red officer domes and [#COL] LEDs. Location: [#LOC].	$2,828
5600-0238	Warning light Whelen 600 series Super LED (PR). (1) red steady burn front driver side below windshield and (1) flashing amber driver side above tail lights to meet California DOT requirements.	$597
5600-0240	Warning light Whelen M4R LED (4) red. Surface mounted with weatherproof connector. Flashing lights wired through door ajar. Location: One on each of the interior cab doors (outboard position).	$1,183
5600-0241	Warning light Whelen M6R series Linear Super LED (PR) red. Location: [#LOC].	$682
5600-0242	Warning light Whelen M6 series Linear Super LED (PR) split red/amber with clear lens. Location: [#LOC].	$748
5600-0243	Warning light Whelen 500 series split TIR6 Super LED (PR) red/amber. Surface mounted 5TSMAC bezel with weatherproof connector. Location: [#LOC].	$577
5600-0244	Whelen Micro 400 Super LED (PR) model MC40ED3. Driver side red with clear lenses, officer side red side facing with clear lenses side and forward; amber rear facing with clear lens. Location [#LOC].	$2,454
5600-0245	Warning light Federal Signal QL64XF LED (PR) red with clear lens. Surface mounted with bezel. Location: [#LOC]	$600
5600-0248	Warning light Whelen M9 series Super LED (PR) red driver, blue officer with clear lenses. Location: [#LOC].	$1,352
5600-0249	Warning light Whelen M6 series Linear Super LED (PR) red driver, blue officer with clear lenses. Location: [#LOC].	$682
5600-0250	Whelen beacon with LED upper beacon and 700 series Super LED (PR) Model B6LED with red LED/clear dome driver and blue LED/clear dome officer and [#COL] LEDs/clear lenses. Location: [#LOC].	$2,828
5600-0251	3m Opticom GPS vehicle system kit. Includes antenna, radio and control unit. Wired through park brake.	$8,228
5600-0252	Hazard (door ajar) light Federal Signal Fire Bolt strobe. Location: [#LOC].	$239
5600-0253	Warning light Federal Signal QL97XF LED (PR). (1) red driver, (1) amber officer. Surface mounted with bezel (if applicable). Location: [#LOC]	$864
5600-0254	Warning light Federal Signal QL97XF LED (PR). (1) amber driver, (1) red officer. Surface mounted with bezel (if applicable). Location: [#LOC]	$864
5600-0255	Warning light Whelen 900 series Super LED driver side red model (90RR5FRR) / officer side amber (90AA5FAR). Location: [#LOC]	$1,173
5600-0256	Warning light Whelen M-Series Super LED model M9J (PR) red/blue. Surface mounted with weatherproof connector. Location: [#LOC].	$1,352
5600-0257	Warning light Whelen M6 series Linear Super LED (PR) split red/blue with clear lens. Location: [#LOC].	$748
5600-0258	Warning light Whelen M9RC series Super LED (PR) red with clear lens. Location: [#LOC].	$1,147
5600-0259	Warning light Whelen M6BC series Linear Super LED (PR) blue with clear lens. Location: [#LOC].	$682
5600-0260	Warning light Weldon Diamondback V46W-C00A LED (PR) amber w/ clear lenses. Location: [#LOC].	$566
5600-0263	Whelen Super LED beacon Model L31H with green dome. Includes switch on pump operator panel labeled "Command". Location: centered rear cab roof.	$918
5600-0264	Whelen beacon with LED upper beacon and 700 series Super LED (PR) Model B6LED with blue LED/clear dome driver and red LED/clear dome officer and 700 series [#COL] LEDs/clear lenses. Location: [#LOC].	$2,828
5600-0265	Hazard light, 2.5" incandescent additional amber. Location and function: center overhead for light tower. Wired through audible alarm if equipped.	$35
5600-0266	Whelen Super LED beacon (PR) model L31H with red driver, blue officer LED and clear domes. Location rear upper body on aerial style brackets.	$1,846

5600-0267	Warning light Whelen Dominator series LED with red driver/blue officer with clear lenses. Location: [#LOC]. Wire through lower level warning.	$914
5600-0268	Mars 888 pedestal mounted traffic clearing light located one each side of cab outboard above the outer quad bezel on contoured pedestal bracket. Lens color(s): driver red, officer clear.	$2,227
5600-0269	Whelen Super LED beacon (PR) model L31H with red driver, amber officer LED and clear domes. Location [#LOC].	$1,846
5600-0270	Warning light Whelen 500 series vetical linear Super LED (PR) red with clear lens. Surface mounted with weatherproof connector. Location: [#LOC].	$597
5600-0271	Warning light Whelen 500 series TIR6 Super LED (PR) red with clear lens. Surface mounted 5TSMAC bezel with weatherproof connector. Location: [#LOC].	$504
5600-0272	Hazard (door ajar) light Federal Signal 2.5" LED model 607120-04. Location: [#LOC].	$58
5600-0273	Warning light Whelen 900 series Super LED (PR). (1) model 90RR5FCR red driver and (1) model 90BB5FCR blue officer. Each light shall have a clear lense w/ colored LEDs. Location: side facing (1) each side upper front body panels and side facing (1) each side upper rear body panels.	$1,173
5600-0274	Warning light Whelen 900 series Super LED (PR). (1) model 90RR5FCR red driver and (1) model 90BB5FCR blue officer. Each light shall have a clear lense w/ colored LEDs. Location: Rear facing up high on the rear one above each other.	$1,173
5600-0275	Warning light Whelen M6AC series Linear Super LED (PR) amber with clear lens. Location: [#LOC].	$682
5600-0276	Whelen Ultra Freedom Micro Edge LED (PR) model MCFLED clear lens with amber driver / red officer LEDs. Location [#LOC].	$1,919
5600-0277	Warning light Whelen M6C series Linear Super LED (PR) white. Location: [#LOC].	$682
5600-0279	Hazard (door ajar) light Whelen model L53RP red. Location: [#LOC].	$238
5600-0284	Whelen Super LED beacon (PR) model L31H with blue driver, red officer LED and clear domes. Location [#LOC].	$1,846
5600-0285	Warning light Roto-Ray LED with (1) red, (1) blue and (1) clear lenses. Locate on front of cab center above grille.	$2,743
5600-0286	Warning light Whelen M6RC series Super LED (PR) red with clear lens. Location: [#LOC].	$652
5600-0287	Warning light Whelen Dominator Plus model DP880000 with (8) red LINZ6 LEDs. Location: [#LOC]. Wire through lower level warning.	$1,502
5600-0288	Whelen red TIR3 LED light heads (2). Locate in rubrails below compartments L1 and R1.	$285
5600-0289	Warning light Whelen 900 series Super LED model 90BB5FBR (PR) blue. Location: [#LOC].	$1,173
5600-0290	Warning light Whelen 600 series Super LED (PR) red with diamond plate mounting boxes. Location: [#LOC].	$768
5600-0291	Warning light Roto Ray LED with (1) red, (1) green and (1) white lights. Locate on front of cab center above grille.	$2,743
5600-0292	Warning light Whelen 900 series Super LED model 90RR5FRC (PR) red w/ clear lens. Location: [#LOC].	$1,173
5600-0293	Light Whelen model PSC00FCR LED (PR) white. Lights are wired to reverse and respective turn signal. Location: (1) each side below L1/R1 just ahead of rear wheels in rubrail (if equipped).	$873
5600-0294	Warning light Federal Signal IMPAXX model IPX600-R red LED w/ bezel (PR). Surfaced mounted with clear lens. Location: [#LOC].	$462
5600-0295	Warning lights Weldon Diamondback V79W-C10A LED amber w/ clear lenses (PR). Location: [#LOC].	$803
5600-0296	Warning light Weldon Diamondback V46W-C LED (PR) red driver, amber officer w/ clear lenses. Location: [#LOC].	$566
5600-0297	Warning light Whelen Dominator series LED model D860020 red/white. Includes R/W/R/R/R/R/W/R LEDs with clear lenses. Location: [#LOC]. Wire through lower level warning.	$902
5600-0298	Warning light Power Arc model M90FK-W LED (PR). Color: White. Location: [#LOC].	$988
5600-0299	Warning light Federal Signal IMPAXX LED model IPX302-4 w/ bezel (PR). Surfaced mounted with red lens. Location: [#LOC].	$317
5600-0300	Warning lights Weldon Diamondback V79W-C00R LED red w/ clear lenses (PR). Location: [#LOC].	$803
5600-0301	Warning light Whelen M2 Super LED warning lights. Includes (2) red M2R LED light heads w/chrome flanges (if applicable). Location: [#LOC].	$543
5600-0302	Warning light Whelen M2 Super LED warning lights. Includes (2) red M2R LED light heads with clear lenses and chrome flanges (if applicable). Location: [#LOC].	$543
5600-0303	Whelen Super LED beacon (PR) model L31H with [#COL] domes. Location [#LOC].	$1,846
5600-0305	Warning light Whelen M6 series Linear Super LED (PR) amber driver, red officer with clear lenses. Location: [#LOC].	$682
5600-0306	Opticom Emitter 3M 794H. LED emitter and control only. Location and activation: [#LOC].	$2,300
5600-0307	Warning light Whelen 600 series LED (PR) with clear lens. Red driver, blue officer surface mounted with weatherproof connector. Location: [#LOC]	$829
5600-0309	Warning light Whelen Vertex Super LED warning lights. Includes (2) red model VTX609R LED light heads with clear lens, w/chrome flanges model VTXFC. Location: [#LOC].	$509
5600-0310	Warning light Whelen M6 series Linear Super LED (PR) split red/clear with clear lens. Location: [#LOC].	$748
5600-0311	Warning light Whelen 900 series Super LED model 90AA5FCR (PR) amber with clear lenses. Location: [#LOC].	$1,173
5600-0312	Light Whelen model PSA00FAR LED (PR) amber. Location: [#LOC].	$380
5600-0313	Warning light Whelen 900 series Super LED with clear lens model 90BB5FCR (PR) blue. Location: [#LOC].	$1,173

5600-0314	Federal Signal Vision LED rotating beacons model VSLR-IPX-R1R21 with rear facing IPX6 red LED warning light (Requires additional rear facing warning lights for NFPA compliance). Location: [#LOC].	$2,310
5600-0315	Whelen Micro Liberty LED (PR) (1) driver Model MCSLED2R clear lense with red LEDs and (1) officer MCSLED2B clear lense with blue LEDs. Location: [#LOC].	$1,617
5600-0316	Warning light Whelen M4AC Super-LED lights (PR) amber with clear lenses. Location: [#LOC].	$875
5600-0317	Whelen Super LED beacon (PR) model L31H with red driver, blue officer LED and clear domes. Location: [#LOC].	$1,846
5600-0318	Whelen Ultra Freedom Micro Edge LED (PR) (1) officer Model MCFLED25 clear lense with red LEDs and (1) driver MCFLED22 clear lense with blue LEDs. Requires addtional upper level warning lights to meet NFPA. Location: [#LOC].	$2,057
5600-0320	Warning light Whelen ION series Super LED (2) red and (1) white with clear lens. Location: [#LOC].	$904
5600-0321	Mars 888 pedestal mounted traffic clearing light located one each side of cab outboard above the outer quad bezel on contoured pedestal brkt. Lens color: clear.	$2,227
5600-0322	Warning light Whelen M7D series Linear Super LED (PR) split red/clear with clear lens. Location: [#LOC].	$757
5600-0327	Warning light Whelen Dominator series LED model D880000 red with clear lenses. Location: [#LOC]. Wire through lower level warning.	$899
5600-0328	Warning light Whelen M7 series Linear Super LED (PR) white light with clear lens. Location: [#LOC].	$663
5600-0330	Warning light Federal Signal IMPAXX model IPX602-R red LED w/ bezel (PR). Surfaced mounted with red lens. Location: [#LOC].	$462
5600-0331	Federal Signal Vision LED rotating beacons model VSLR-R with red LED warning light(s) and red lenses (Requires additional rear facing warning lights for NFPA compliance). Location: [#LOC].	$1,726
5600-0332	Mars 888 pedestal mounted traffic clearing light located (1) each side of cab outboard above the outer quad bezel on contoured pedestal bracket. Driver side red, officer side clear.	$2,227
5600-0333	Warning light Whelen M9 series Super LED (PR) red driver, amber officer. Location: [#LOC].	$1,352
5600-0334	Warning light Whelen IONWR series Super LED red in color. Location: [#LOC].	$621
5600-0336	Warning light Roto Ray LED with (1) red, (1) amber and (1) clear lights. Locate on front of cab center above grille.	$2,743
5600-0338	Warning light Whelen M9 series Super LED (PR) red officer, amber driver. Location: [#LOC].	$1,352
5600-0339	Warning light Whelen 600 series Super LED (PR). Red officer, blue driver surface mounted with weatherproof connector. Location: [#LOC].	$597
5600-0340	Warning light Whelen M6 series Linear Super LED (PR) red driver, blue officer. Location: [#LOC].	$682
5600-0341	Warning light Whelen 600 series split Super LED (PR) red/blue with clear lens. Location: [#LOC].	$774
5600-0342	Whelen beacon with LED upper beacon and 700 series Super LED (PR) Model B6LED with blue driver and amber officer domes and [#COL] LEDs. Location [#LOC].	$2,828
5600-0343	Whelen red TIR3 LED light heads (2). Locate in rubrail below pump module offset forward.	$285
5600-0345	Warning light Federal Signal IMPAXX LED model IPX300-4 w/ bezel (PR). Surfaced mounted red LEDs with clear lens. Location: [#LOC].	$317
5600-0347	Warning light Whelen 900 series Super LED blue driver, amber officer. Location: [#LOC].	$1,173
5600-0350	Hazard (door ajar) light Whelen Vertex red LED model VTX609R w/chrome bezel. Location: [#LOC].	$256
5600-0352	Warning light Whelen M6G series Linear Super LED (PR) green. Location: [#LOC].	$876
5600-0354	Warning lights Whelen LINZ6 LEDs (PR) red in color with chrome bezels if applicable. Location: [#LOC].	$455
5600-0355	Whelen beacon with LED upper beacon and 700 series Super LED (PR) Model B6LED with blue domes and [#COL] LEDs. Location: [#LOC].	$2,828
5600-0356	Federal Signal Pulsator LED beacon pole mounted with green dome. Mounted on a ROM external push/pull KR-SB-500-W4-I series pole with a flat surface to accommodate beacon mounting. Includes switch in officer overhead labeled "Command". Location: driver side rear of cab.	$1,418
5600-0357	Warning light Whelen M6 series Linear Super LED (PR) red driver, green officer. Location: [#LOC].	$682
5600-0358	Warning light Federal Signal Viper EXT Model VPX802-4 LED w/ bezel rear upper level package. Includes (9) surfaced mounted with red lens; (5) up high rear of body and (2) side facing on each side of body up high and rearward (as applicable).	$2,434
5600-0359	Warning light Federal Signal IMPAXX LED model IPX302 w/ bezel (PR) (driver blue, officer red). Surfaced mounted with colored lens. Location: [#LOC].	$317
5600-0360	Warning light Federal Signal QuadraFlare QL64XF LED (EA) red. Light to be steady burn to meet California DOT requirements. Surface mounted with bezel. Location: [#LOC].	$268
5600-0362	Power Arc beacon (PR) Model LEDB210 with [#COL] domes. Location: [#LOC].	$1,216
5600-0364	Warning light Roto Ray LED with (2) green and (1) clear lights. Locate on front of cab center above grille.	$2,743
5600-0366	Warning light Whelen 500 series TIR6 Super LED (2) blue and (3) amber. Surface mounted 5TSMAC bezel with weatherproof connector. Lights to activate when park brake is set in blocking mode. Location: [#LOC].	$1,260
5600-0367	Warning light Whelen 600 series Super LED (PR) amber with clear lens. Location: [#LOC].	$597
5600-0368	Warning light Whelen M6A series Linear Super LED (PR) amber. Location: [#LOC].	$682
5600-0369	Whelen Ultra Freedom Micro Edge LED (PR) model MCFLED2 clear lens with red driver / amber officer LEDs. Location: [#LOC].	$1,919

5600-0370	Warning light Whelen M-Series Super LED model M9AC (PR) amber with clear lens. Surface mounted with weatherproof connector. Location: [#LOC].	$1,147
5600-0371	Whelen Ultra Freedom Micro Edge LED (PR) model MCFLED2RB clear lens with (1) red/(1) blue LEDs. Location: [#LOC].	$1,919
5600-0372	Light Code 3 model DB2-2PZNFPA2 (PR) with clear lenses. Located: [#LOC].	$1,926
5600-0373	Warning Light Code3 model #65BZCB blue LED with clear lens and chrome bezel (PR). Location: [#LOC].	$1,073
5600-0374	Warning light Federal Signal QL64XFC LED (PR) blue with clear lenses. Surface mounted with bezel. Location: [#LOC].	$600
5600-0375	Warning light Federal Signal IMPAXX model IPX600-B blue LED w/ bezel (PR). Surfaced mounted with clear lens. Location: [#LOC].	$462
5600-0377	Federal Signal Vision LED rotating beacons model VSLR-R2A02 with rear facing IPX6 amber LED warning light. Location: [#LOC].	$2,310
5600-0378	Warning light Code 3 65BZCR LED (PR) Red with clear lens. Surface mounted with bezel. Location: [#LOC]	$568
5600-0379	Warning light Federal Signal QL97XFC-R LED (PR) red with clear lenses. Surface mounted with bezel (if applicable). Location: [#LOC].	$864
5600-0380	Warning light Federal Signal QL64SFC split LED (PR) driver red/clear, officer red/green. Surface mounted with bezel. Location: [#LOC].	$755
5600-0381	Hazard (seat belt warning) blue light 2" LED. Location: Adjacent to door ajar light.	$35
5600-0383	Warning light Whelen 900 series Super LED (PR). (1) model 90RR5FRR red driver and (1) model 90BB5FBR blue officer. Location: [#LOC].	$1,173
5600-0384	Tomar model RECT-79-TSMF bezel (PR) for Whelen 900 series lights. Lights to be angled forward. Location: driver and officer gravel shield mounted lights.	$180
5600-0385	Whelen Super LED ROTA-BEAM beacon (PR) model R316 Series [#COL] domes. Location [#LOC].	$2,010
5600-0386	Warning light Whelen M2 Super LED warning lights. Includes (2) amber M2A LED light heads w/chrome flanges (if applicable). Location: [#LOC].	$543
5600-0387	Whelen amber TIR3 LED light heads (2). Locate [#LOC].	$285
5600-0388	Hazard (light tower ajar) amber light 2" LED. Location: [#LOC].	$35
5600-0389	Warning light Whelen M4RC Super-LED lights (PR) red with clear lenses. Location: [#LOC].	$523
5600-0390	Mars 888 LED pedestal mounted traffic clearing light located one each side of cab outboard above the outer quad bezel on contoured pedestal brkt. Lens color: clear.	$3,533
5600-0391	Warning light Whelen M4R Super-LED lights (PR) red. Location: [#LOC].	$523
5600-0392	Whelen Ultra Freedom Micro Edge LED (PR) model MCFLED2 clear lens with blue driver / red officer LEDs. Location (1) each side of body on rearward compartment top.	$1,871
5600-0393	Warning light Whelen M6GC series Linear Super LED (PR) green with clear lenses. Location: [#LOC].	$697
5600-0395	Warning light Whelen M-Series Super LED model M9K (PR) red/amber. Surface mounted with weatherproof connector. Location: (1) on each side up high rear of body.	$1,352
5600-0396	Warning light Whelen Dominator series LED model D66000 red with clear lenses. Location: [#LOC]. Wire through lower level warning.	$797
5600-0397	Warning light Whelen WIONA series Super LED amber in color (ea). Locate rear of body below directional lightbar wired through reverse.	$311
5600-0398	Warning light Whelen 500 series TIR6 Super LED (PR)1-red driver, 1-green officer. Surface mounted 5TSMAC bezel with weatherproof connector. Location: [#LOC].	$504
5600-0399	Warning light Whelen M9 series Super LED (PR) red with diamond plate mounting boxes. Location: [#LOC].	$1,447
5600-0400	Warning light Whelen IONWA series Super LED amber in color. Location: [#LOC].	$621
5600-0401	Warning light Whelen M6B series Linear Super LED (PR) blue. Location: [#LOC].	$682
5600-0402	Warning light Whelen M9 series Super LED (PR) blue driver, red officer with clear lenses. Location: [#LOC].	$1,352
5600-0404	Whelen beacon with LED upper beacon and 700 series Super LED (PR) Model B6LED with amber LED/clear dome driver and red LED/clear dome officer and [#COL] LEDs/clear lenses. Location: [#LOC].	$2,828
5600-0405	Warning light Whelen M9 series Super LED (PR) red with (1) officer side diamond plate mounting box. Location: driver side facing uppper body corner, officer rear compartment top outboard.	$1,402
5600-0406	Warning light Whelen 500 series TIR6 Super LED (2) blue and (3) red. Surface mounted 5TSMAC bezel with weatherproof connector. Lights to activate when park brake is set in blocking mode. Location: [#LOC].	$1,260
5600-0407	Whelen Ultra Freedom Micro Edge LED (PR) model MCFLED red lens with red LEDs. Location [#LOC].	$1,919
5600-0408	Warning light Federal Signal QL97XF LED (PR) red with diamond plate mounting box. Surface mounted with bezel (if applicable). Location: [#LOC].	$1,034
5600-0409	Whelen beacon with LED upper beacon and 700 series Super LED (PR) model B6LED with red domes and 700 series Super LED scene lights rear facing. Location: [#LOC].	$2,984
5600-0410	Warning light Whelen 600 series Super LED (PR) red with black flange. Location: [#LOC].	$597
5600-0412	Warning light Federal Signal QL64XF LED (EA) white. Surface mounted with bezel. Location: [#LOC].	$348
5600-0414	Warning light Whelen 900 series Super LED (PR). (1) model 90RR5FRR red officer and (1) model 90BB5FBR blue driver. Location: [#LOC].	$1,173
5600-0415	Warning/Scene light Whelen M9V2R Super LED (PR) red. Location: [#LOC].	$1,969
5600-0417	Enclose bottom of aerial style bracket for no exposed wiring.	$92

5600-0418	Warning light Whelen 500 series TIR6 Super LED red. Surface mounted 5TSMAC bezel with weatherproof connector. Light to be steady burn while the parking brake is disengaged. Location: Centered in front cab grill	$293
5600-0419	Mars 888 LED pedestal mounted traffic clearing light located one each side of cab outboard above the outer quad bezel on contoured pedestal brkt. Lens color: Red.	$3,533
5600-0420	Power Arc (PR) Model LED210 driver blue, officer red. Location: [#LOC].	$1,238
5600-0421	Whelen beacon with Rota-Beam LED upper beacon and M7 series Super LED (PR) model B63M7 with red domes and [#COL] LEDs. Location: [#LOC].	$3,066
5600-0422	Warning light Whelen WIONR series Super LED red in color (PR). Locate [#LOC].	$555
5600-0423	Warning light Whelen Rota-Beam series model 6RBRC Super LED (PR) red with clear lenses. Location: [#LOC].	$953
5600-0424	Warning light Whelen M6 series Linear Super LED (PR) blue driver, red officer with clear lenses. Location: [#LOC].	$682
5600-0425	Code 3 / PSE Oscilaser warning light red (PR). Lights are to be located on front of cab above quad bezels.	$621
5600-0426	Warning/Scene light Whelen M9V2 Super LED (PR) red driver, blue officer with clear lenses. Location: [#LOC].	$1,969
5600-0427	Warning light Whelen M9 series Super LED (PR) blue driver, red officer. Location: [#LOC].	$1,352
5600-0428	Warning light Whelen 500 series split TIR6 Super LED (PR) red/blue. Surface mounted 5TSMAC bezel with weatherproof connector. Location: [#LOC].	$577
5600-0429	Warning/Scene light Whelen M9V2 Super LED (PR) red driver, blue officer. Location: [#LOC].	$1,969
5600-0430	Whelen Rota-Beam LED lights (3) red/blue/red with clear lenses and smooth plate mounting box painted upper 2-tone job color. Location: centered below windshield.	$1,822
5600-0431	Warning light Whelen 600 series Super LED (PR). Amber driver, blue officer surface mounted with weatherproof connector and clear lenses. Location: [#LOC].	$597
5600-0432	Warning light Whelen 600 series Super LED (PR). Red officer, blue driver surface mounted with clear lenses and weatherproof connector. Location: [#LOC].	$597
6000	**Aerial Device**	
6100-0015	Aerial boom 50' Mid-Mount. Includes monitor, rescue ladder, split steps at tip and jack leg flood lights.	$140,105
6100-0046	Raise aerial 50' mid-mount boom pedistal and boom support 5". For use with 85" high body.	$2,099
6100-0049	Aerial boom 50' Mid-Mount. Includes rescue ladder, split steps at tip and jack leg flood lights. Requires monitor option.	$129,789
6150-0001	Aerial hydraulic filter isolation kit.	$368
6150-0003	Gauge aerial hydraulic oil level. Electronic display to be located [#LOC].	$566
6300-0065	Monitor TFT Typhoon RC electric w/extended range 1000GPM for 50' boom. Includes tip and base controls. Monitor has a powder coated silver finish.	$10,318
6350-0006	2.5" Waterway Class 1 pressure gauge 30-0-600. Locate next to waterway inlet.	$191
6350-0007	3.5" Waterway Class 1 pressure gauge. Locate next to waterway inlet.	$216
6350-0009	Right side 4" NST waterway inlet for Mid-Mount Boom or Platform. Includes chrome cap.	$1,442
6350-0010	Flowminder with single readout and totalizer for the aerial waterway to be located at the aerial control station.	$2,411
6350-0022	Relief valve Akron model 59 for Snozzle waterway.	$635
6350-0050	2.5" Pressure Gauge Dual Read (30-0-600 psi/100-0-4140 KPA). Locate next to waterway inlet Color: [#COL].	$190
6350-0060	3.5" Waterway Class 1 pressure gauge. Locate next to waterway inlet. Color: [#COL].	$233
6350-0061	3.5" Waterway compound pressure gauge (30-0-400). Color: [#COL].	$338
6500-0035	Piercing nozzle for Snozzle - Snozzle supplied.	$9,455
6500-0045	Handrails 50' boom - folding. Lowers travel height approx 7.5". Includes switch and wiring to hazard light in cab.	$6,378
6550-0004	Whelen strobe lights at ladder tip (PR) with [#COL] lenses. Switched with aerial master.	$1,026
6550-0020	Whelen 500 Series TIR6 Super-LED lights at ladder tip (PR) with red lenses. Switched with aerial master.	$805
6550-0021	Outrigger warning lights (PR) Trucklite model 21 LED in rubrail.	$152
6550-0024	Outrigger warning lights (PR) Trucklite model 21 LED in rubrail.	$152
6550-0030	Whelen M6J Super LED red/blue warning lights (4) with clear lenses. Located down low across front of platform wired to upper level lights.	$1,562
6550-0031	Whelen M6J Super LED split red/blue warning lights on platform (PR) with clear lenses. The lights shall be switched with aerial master and located one each on platform.	$748
6550-0042	Warning light Whelen Dominator Plus model DP4ARAR with (4) LINZ6 LEDs Amber, Red, Amber, Red. Location: [#LOC]. The light shall be switched with emergency lighting.	$1,130
6550-0048	Whelen VTC6R Vertex Super-LED lights at ladder tip (PR). Red with clear lenses and chrome bezels. Switched with aerial master.	$536
6550-0050	Whelen 500 Series TIR6 Super-LED lights at ladder tip (PR) red with clear lenses. Switched with aerial master.	$805
6550-0053	Whelen M6K Super LED split red/amber warning lights with clear lenses on platform (PR). The lights shall be switched with aerial master and located [#LOC].	$757
6550-0057	Whelen VTC6R Vertex Super-LED lights at ladder tip (PR). Blue with clear lenses and chrome bezels. Switched with aerial master.	$536
6550-0059	Whelen VTC6R Vertex Super-LED lights at ladder tip (PR). Red with clear lenses and black bezels. Switched with aerial master.	$536
6560-0002	Spot light 12V located [#LOC].	$424
6560-0003	Flood light 12V located [#LOC].	$424
6560-0004	Collins light FX-12 located [#LOC].	$547

6560-0005	Flood lights Unity at base (PR).	$496
6560-0006	Collins light FX-12 at base (PR).	$1,197
6560-0012	Quartz light 750W Magnafire model KR636-S. Requires 110-volt receptacle at tip option. The light shall be located [#LOC].	$1,080
6560-0018	Quartz light Fire Research Focus 750W/110V model FCA570-S75-ON without pole. The light shall be located [#LOC].	$1,187
6560-0019	Quartz light Fire Research Optimum 750W/110V model OPA570-S75-ON without pole. The light shall be located [#LOC].	$1,257
6560-0062	Fire Research Evolution 12V LED model FCA570-V15-ON without pole. The light shall be located [#LOC].	$2,033
6560-0092	Wire guard for FRC Evolution light(s) on aerial. Location: [#LOC].	$146
6560-0093	Light Whelen Pioneer Plus model PFP2AC powder coated black with permanent mount (ROM model KR-SB-6PFP2AC) powder coated black. Requires 110-volt receptacle at tip option. Location(s): [#LOC].	$2,052
6560-0102	Light Whelen Pioneer Plus model PFP2AC with permanent mount. Requires 110V receptacle at tip option. Location(s): [#LOC].	$2,052
6560-0105	Light Whelen Pioneer Plus 120V model PFP1AP1 with PBAPEDA pedestal mount. Requires 110 volt twist lock receptacle at tip option. Location(s): [#LOC].	$1,626
6560-0106	Quartz light Fire Research Spectra 12V LED model SPA260-Q15 with surface mount and on/off sw on platform console. The light shall be located [#LOC].	$1,882
6560-0109	Quartz light Fire Research Spectra 12V LED model SPA260-Q15 with surface mount powder coated black and on/off sw on platform console. The light shall be located [#LOC].	$1,933
6560-0113	Light Whelen Pioneer Plus 120V model PFP1AP1 with PBAPEDA pedestal mount located at tip of base section (PR). Requires 110 volt twist lock receptacle at tip option.	$3,353
6560-0116	Light Whelen Pioneer Plus 120V model PSP1AP1 with PBAPEDA pedestal mount. Requires 110 volt twist lock receptacle at tip option. Location(s): [#LOC].	$1,841
6570-0003	110V/15A twist lock receptacle at tip.	$2,733
6570-0008	Intercom aerial 2-way. Atkinson Dynamics (Federal). Speaker to be located to rear of platform on Bronto units.	$1,528
6570-0015	110V/20A twist lock receptacle at tip.	$2,733
6570-0040	110V/30A twist lock receptacle at tip.	$2,838
6570-0042	120V/250V 20A Daniel Woodhead Non-NEMA model 67W08 receptacle at tip.	$3,114
6570-0047	(2) 110v circuits to tip. (1) with a 20A twist lock recept in platform and (1) to supply power to quartz lights. Both to include 15A breakers. Aramco Bronto only.	$2,733
6570-0048	(2) 110v circuits to tip. (1) with a 20A household recept in platform and (1) to supply power to quartz lights. Both to include 15A breakers. Aramco Bronto only.	$2,733
6570-0051	110V/15A Hubble twist lock receptacle at tip. Includes grey weatherproof cover.	$2,733
6750-0000	Aerial sign plates 10 x 144 (PR). Available on Booms, HP75 and HP100 only. Does not include lettering. Color: [#COL].	$1,484
6750-0005	Aerial sign plate 9 x 266 - Snozzle supplied. Right side of booms only. Does not include lettering. Color: [#COL]	$938
6850-0002	Pump panel control station. HP75 / HP78 and 50' rear mount boom.	$3,508
6850-0030	Aerial control station at top of body (Add'l). 50' Mid-Mount boom.	$3,202
6900-0000	Aerial flow test - 3rd party.	$442
6900-0002	Aerial 2009 NFPA Certification.	$3,548
6900-0005	Aerial flow test - 3rd party.	$442
6900-0006	Aerial flow test - 3rd party.	$442
7000	**Loose Equipment**	
7000-0003	Akron Brass stacked tips w/stream shaper. Base style 3485 & Stacked Tips style 3499.	$601
7000-0004	Loose Equipment Package for Montral. See files tab for quote.	$11,099
7000-0007	Mercury Quick Attack Monitor 2.5" NH x 2.5" NH monitor, with 4447 nozzle, and mounting bracket.	$3,549
7000-0008	Akron Apollo 3423 deck monitor with ground base. To include stacked tips 2499, 3488 steam shaper, and direct truck mount base.800/1250 GPM. 2.5	$2,848
7200-0000	Adapter Chrome 3"MNST x 2.5"FNST with Plug	$201
7200-0001	Adapter Chrome 3"FNST x 2.5"MNST with Cap.	$231
7200-0005	Chrome Swivel Connector 6"FNST x 4.5"FNST Long Handle	$439
7200-0006	Discharge Adapter 2.5"FNST x 2.5"MNST Spec with Cap - Special adapter with specified thread.	$142
7200-0007	Adapter 2.5"MNST x 2.5"FNST Spec with Plug - Special adapter with specified thread.	$177
7200-0008	Adapter Wye 2.5"FNST x 1.5"MNST.	$556
7200-0009	Adapter Wye 4"FNST x (2) 2.5" FNST	$712
7200-0010	Adapter 2.5" FNST x 2.5" F British Instantaneous.	$201
7200-0011	Adapter 2.5" MSNT x 2.5" M British Instantaneous.	$151
7200-0013	Adapter Collector 6"FNST x (3) 2.5"M British Instantaneous	$904
7200-0014	Adapter 2.5"FNST x 4" Storz	$340
7200-0015	Adapter 3"FNST x 4" Storz with cap.	$357
7200-0016	Adapter 3"FNST x 5" Storz and insert cap.	$438
7200-0017	Swivel connector 5"FNST x 4" Storz with tethered Cap.	$418
7200-0018	Swivel Connector 4" FNST x 4" Storz with Tethered Cap.	$316
7200-0019	Swivel connector 4"FNST x 5" Storz with tethered cap.	$398
7200-0020	Swivel connector 5"FNST x 5" Storz with tethered cap.	$480
7200-0021	Swivel Connector 6" FNST x 4" Storz with Tethered Cap.	$459
7200-0022	Swivel Connector 6" FNST x 5" Storz with Tethered Cap.	$496
7200-0023	Swivel Connector 3" FNST x 4" Storz 30 Degree Elbow with Tethered Cap.	$485
7200-0024	Swivel Connector 3"FNST x 5" Storz 30 Deg Elbow with Tethered Cap.	$604

7200-0025	Swivel Connector 4"FNST x 4" Storz 30 Deg Elbow with Tethered Cap.	$331
7200-0026	Swivel Connector 4" FNST x 5" Storz 30 Deg Elbow with Tethered Cap.	$407
7200-0027	Adapter 2.5"MNST x 2.5" Storz with 30 degree droop and insert cap.	$154
7200-0028	Adapter 5" FNST x 5" Storz 30 degree with tethered cap.	$269
7200-0029	Adapter Wye 5"FNST x (2) 2.5" FNST	$791
7200-0030	Adapter, 5" FNPT X 6" MNST Chrome.	$246
7200-0031	1.5" Chrome Cap w/Chain.	$18
7200-0032	Adapter 2.5"FNST x 2.5" Storz. Includes cap and connector.	$152
7200-0035	Adaptor 30 degree for rear 2.5" discharge. To be 2.5" FNST x 2.5" MNST. Ship loose.	$194
7200-0036	Intake 6" Elkhart Elk-O-Lite 9786 Piston Valve. Ship Loose.	$2,017
7200-0040	Chrome adapter for 2.5" discharge. Includes 2.5" FNST x 1.5" IPT thread with cap.	$68
7200-0043	Intake 6" Northline FSGR Piston Valve with intake Relief. ship loose	$1,172
7200-0044	Adapter.75 FGHT (garden hose) x 1.5" Storz	$86
7200-0045	Intake gated relief valve. 6"FNST x 6"MNST.	$1,021
7200-0046	Swivel Pyrolite connector 2.5"FNST x 2.5" FNST locker lug.	$98
7200-0047	Adapter Pyrolite 2.5"MNST x 2.5"MNST.	$55
7200-0050	Adapter 5" Storz x (2) 2.5" FNST swivels gated wye	$548
7200-0054	Adapter wye suction 6"FNST x (3) 2.5" FNST	$1,741
7200-0058	Adapter 2.5FNST x 2.5M (3.232x5Tip) with Cap	$187
7200-0059	Adapter 2.5MNST x 2.5F Swivel (3.232x5Tip) with Plug	$193
7200-0061	Adapter 2.5MNST x 2.5F Swivel (3.230x7TPI) with Plug	$193
7200-0062	Adapter 4.5" FNST x 5" Storz.	$231
7200-0063	Chrome adaptor for 2.5" discharge. Includes 2.5" FCSA x 1.5" NPSH threads with caps.	$102
7200-0071	Adapter 1.5" FNST X 1.0" MNST w/Cap.	$86
7200-0074	Swivel Connector 6"FNST x 5" Storz with 30 degree elbow and Tethered Cap	$499
7200-0076	A 5" FNST x 4" Storz adapter with a 30 degree droop shall be shipped loose.	$178
7200-0086	Adapter Chrome 3"FNST x 2.5"MNST	$222
7200-0087	Swivel Connector 6"FNST x 5" Storz 30 deg Elbow with Tethered Cap. (Task Force Tip Adapt)	$572
7200-0088	Chrome Swivel Connector 6"FNST x 4"FNST Long Handle	$439
7200-0089	Swivel Connector 3"MNST x 4" Storz 30Deg Elbow with Tethered Cap	$325
7200-0090	Adapter 2.5" female NST x 2.5" male British Instantaneous with cap	$111
7200-0095	Akron 7980 Piston Intake Valve with 5" Storz outlet.	$2,218
7200-0096	Akron 7980 Piston Intake Valve with 4" Storz outlet with cap.	$1,754
7200-0098	A 2.5" MNST x 5" FNST with 5" Plug Adapter.	$502
7200-0100	Intake 6" Elkhart Elk-O-Lite 9786 Piston Valve. Ship Loose. The valve shall have an 6" female NST inlet and 5" swivel with a locking Stoz inlet	$2,017
7200-0101	Adapter 2.5FNST x 2.5M British Columbia Threads (BCT 3.00x8Tip) with Cap.	$180
7200-0102	Adapter 2.5MNST x 2.5F Swivel British Columbia Threads (BCT 3.00x8TPI) with Plug	$358
7200-0103	Inlet valve gated w/relief and elbow. 4"FNST x 4" STORZ and cap. (Kocheck Model 40K40204)	$2,294
7200-0105	Elkhart 18" Pipe Extender 8298EXw/8298.	$525
7200-0107	Adapter aluminum 3"FNST x 2.5"MNST with Cap.	$231
7200-0108	Adapter 4" FNST x 5" Storz.	$231
7200-0109	Adapter, 4.5" FNST X 4.5" MNST Chrome.	$338
7200-0110	Adapter 2.5" female NST x 2.5" male 3.187 x 6 thread per inch with cap	$149
7200-0111	Adapter 2.5" female NST x 2.5" male Cleveland 3.078 x 8TPI with cap.	$182
7200-0112	Adapter 2.5MNST x 2.5F Swivel (Cleveland 3.078 x 8TPI) with Plug	$374
7200-0113	Adapter Connector 3" FNST x 4" Storz x 4" Storz x 2.5" MNST x 2.5" FNST X 1.5" MNST with cap.	$679
7200-0115	Swivel Connector 6"FNST x 4" Storz with 30 degree elbow and Tethered Cap	$499
7300-0000	Reducer Chrome 2.5"FNST x 1.5"MNST.	$71
7400-0000	Chrome Intake elbow 2.5" MNST 45Deg	$187
7400-0001	Chrome discharge elbow 3"FNST x 2.5"MNST 45 Deg	$248
7400-0002	Chrome suction elbow 3"MNST x 2.5"FNST 45Deg	$248
7400-0003	Chrome discharge elbow 3" 30 Degree.	$232
7400-0004	Elbow 30 degree chrome swivel w/2.5"FNST x 2.5"MNST.	$71
7400-0005	Chrome discharge elbow 2.5", 45 degree.	$187
7400-0008	Chrome discharge elbow 3.0" FNST X 2.5" MCSA 30Deg chrome.	$254
7400-0009	Chrome Elbow 4" MNST X 4" FNST W/Plug.	$461
7400-0010	Chrome discharge elbow 4" 30 Degree.	$448
7400-0011	Chrome Intake elbow 2.5" MNST x 2.5" Female 3.187 x 6 thread per inch with a 2.5" Male 3.187 x 6 thread per inch chrome plug with chain, 45 Degree	$240
7400-0012	Chrome discharge elbow 2.5" FNST x 2.5" Male 3.187 x 6 thread per inch with a 2.5" Female 3.187 x 6 thread per inch chrome rocker lug cap with chain, 45 Degree.	$228
7400-0013	Chrome discharge elbow 2.5" FNST x 2.5" Male 2.986 x 8 thread per inch with a 2.5" Female 2.986 x 8 thread per inch chrome rocker lug cap with chain, 45 Degree.	$228
7500-0000	Ziamatic Air Pack Bracket (2PHS) Model #UN-6-30-2PHS. Shipped loose.	$305
7500-0001	Ziamatic Air Pack Bracket (FPHS) Model #UN-6-30-3-FPHS. Shipped loose.	$309
7500-0002	Universal air pack bottle bracket (EA). Shipped loose.	$149
7500-0004	Bracket SCBA Lifeguard SmartDock Gen2 restraint system. Ship Loose.	$480
7550-0000	ABC Extinguisher 10# w/Bracket.	$162
7550-0001	ABC Extinguisher 12# w/Bracket	$255
7550-0002	Extinguisher, 15# CO2 w/bracket.	$431
7550-0003	Extinguisher, ABC 20# dry chemical w/bracket. Amerex model A411	$238
7550-0004	Extinguisher 2.5 Gallon Water Pressure w/Bracket. Amerex model A240	$189

7550-0006	ABC Extinguisher 20# ABC w/Bracket. Mount bracket to floor just inside the interior on the officer's side rear of 30# extinguisher.	$167
7600-0000	Axe bracket - shipped loose.	$95
7600-0001	Flat Head Axe 6 lb.	$61
7600-0002	Pick Head Axe 6#.	$76
7600-0003	Flat Head Axe 6# with Fiberglass Handle.	$131
7600-0004	Pick Head Axe 6# with Fiberglass Handle.	$134
7600-0005	Pike Pole Fiberglass 6'.	$136
7600-0006	Pike Pole Fiberglass 8'.	$90
7600-0007	Pike Pole Fiberglass 10'.	$173
7600-0008	Pike Pole Fiberglass 12'.	$182
7600-0009	Pike Pole Mounting Tube Style (Each)	$217
7600-0013	Hooligan Tool 36".	$273
7600-0014	Hooligan Tool Bracket (Each).	$159
7600-0015	Wheel Chocks 32" NFPA Compliant - Pair of Zico AC-32. Up to 32" diameter Tires. Includes mounting bracket.	$456
7600-0016	Wheel chocks 44" NFPA compliant, pair (PR) of Zico SAC-44. Up to 44" diameter tires. Includes mounting brackets.	$513
7600-0017	Collins CL-12-M hand held spotlight (shipped loose)	$453
7600-0018	Adjustable combination hydrant spanner wrench.	$82
7600-0019	Spanner Wrench (2) #10 with Holder.	$170
7600-0024	Crow Bar 36".	$18
7600-0025	Crow Bar 50".	$126
7600-0026	Crow Bar 60".	$52
7600-0027	Bracket for Crow Bar (Each)	$234
7600-0029	Bolt Cutter 24".	$73
7600-0030	Bolt Cutter 36".	$513
7600-0031	Bracket for Cutter (Each)	$68
7600-0035	Jack Hydraulic 5 Ton	$85
7600-0037	Wheel Chocks Aluminum Zico AC-32 with mounting brackets.	$279
7600-0038	Salvage Cover 12' x 18'.	$320
7600-0043	First Aid Kit 24 Unit	$137
7600-0044	First Aid Kit 36 Unit.	$268
7600-0053	Wheel Chocks Alum HGS Heavy Includes Brackets.	$286
7600-0054	Heavy Duty Tire Inflator with Gauge. Registers from 10 to 120 psi.	$149
7600-0057	Wrench lug 2pc - lug wrench in two (2) pieces. Lug ends are 1.5" and 1.312" (BRT19951) with handle (BRT17899).	$113
7600-0058	Wrench Hydrant w/2 Spanner Wrench Combination Set with Bracket. Meets FAA 10C Requirements for ARFF/Fire Trucks.	$129
7600-0060	Saw Partner K12FD w/aluminum case. Meets FAA 10C requirements for ARFF/Fire trucks. Partner Model K12FD9514MK fire deptartment rescue saw 14".	$2,554
7600-0080	Sledge Hammer 8# with Fiberglass Handle	$55
7600-0081	Hammer 4# w/fiberglass handle.	$36
7600-0082	24 Ounce Ball Peen Hammer	$21
7600-0084	12" Hacksaw with 12 Spare Blades.	$88
7600-0087	Pike Pole Fiberglass 8 Ft w/ D-Handle.	$90
7600-0088	Pike Pole 8 Ft. Firehooks Unlimited APH-8 pole.	$130
7600-0089	Pike Pole 6 Ft. Firehooks Unlimited New York hook RH-6 pole.	$138
7600-0090	Flat Head Axe 8# with Fiberglass Handle	$168
7600-0092	Rubber mallet with fiberglass handle.	$45
7600-0093	Wrench Storz adjustable with holder.	$100
7600-0094	Craftsman Tool Set 283 piece set with Allen Key set and 4 Drawer Tool Box.	$770
7600-0095	Pike Pole 6 Ft. Firehooks Unlimited APS-6 pole.	$156
7600-0099	Pike Pole 8 Ft. Firehooks Unlimited APH-8 pole with D-Handle.	$149
7600-0100	Pike Pole 10 Ft. Firehooks Unlimited APH-10 pole.	$189
7600-0101	Pike Pole 12 Ft. Firehooks Unlimited APH-12 pole.	$209
7600-0102	Pike Pole 6 Ft. Firehooks Unlimited APH-6 pole.	$118
7600-0103	Pike Pole 6 Ft. Firehooks Unlimited fiberglass MPH-6 pole. Includes gas shut-off end.	$120
7600-0104	Pike Pole 8 Ft. Firehooks Unlimited fiberglass MPH-8 pole. Includes gas shut-off end.	$141
7600-0105	Pike Pole 12 Ft. Firehooks Unlimited fiberglass MPH-12 pole. Includes gas shut-off end.	$215
7600-0108	Pike Pole 6 Ft. Akron UT-6-DWH with drywall hook.	$131
7600-0109	Pike Pole 10 Ft. Akron UT-10-DWH with drywall hook.	$143
7600-0110	Pike Pole 4 Ft. Akron UT-4-D-DWH with drywall hook and D-handle.	$131
7600-0111	Pike Pole 12 Ft. Akron PP-12 with USA standard hook.	$169
7600-0112	Pike Pole 8 Ft. Akron PP-8 with USA standard hook.	$142
7600-0113	Pike Pole 6 Ft. Akron PP-6 with USA standard hook.	$130
7600-0114	Tire inflator, large bore, heavy duty includes gauge. Registers from 10 to 160 psi, in 2 psi increments.	$102
7600-0115	Pike Pole 8 Ft. Firehooks Unlimited New York hook RH-8 pole.	$145
7600-0116	Pike Pole Fiberglass 6 Ft w/ D-Handle.	$105
7600-0117	Pike Pole Fiberglass 12 Ft w/ D-Handle.	$130
7700-0004	Hard suction hose 6" X 10' with Pyrolite couplings.	$1,033
7700-0006	Booster hose 100' long, 1" 800 PSI.	$647
7700-0007	Akron 1" 60gpm Pistol Grip Assault Nozzle	$698

7700-0010	Hard Suction Hose 3" X 10' with Pyrolite Couplings.	$274
7700-0011	Hard Suction Hose 4.5" X 10' with Pyrolite Couplings.	$629
7700-0012	Hard suction hose 5" X 10' with Pyrolite couplings.	$757
7700-0013	Hard Suction Hose 5" X 10' with Chrome Couplings	$891
7700-0015	Hard Suction Hose 6" X 10' with Chrome Couplings.	$1,241
7700-0017	Soft Suction Hose 6" x 4.5" with Long Handle Chrome Couplings.	$1,539
7700-0018	Soft Suction Hose 6" X 15' with Long Handle Chrome Couplings.	$1,324
7700-0019	Booster Hose 50' Length 75" 800PSI	$391
7700-0020	Booster hose, 100' length of 3/4", 800 PSI.	$565
7700-0021	Booster Hose 50' Length 1" 800 PSI.	$438
7700-0022	Booster Hose 50' x 1" Reeltex (Each) Niedner Reeltex fabric booster hose with couplings.	$438
7700-0023	Booster Hose 100' x 1" Reeltex (Each) Niedner Reeltex fabric booster hose with couplings.	$673
7700-0025	Hose, double jacket 50' length 1.5" 600 PSI.	$206
7700-0026	Double Jacket Hose 50' Length 2.5" 600PSI	$320
7700-0027	Double Jacket Hose 50' Length 3" 600PSI	$402
7700-0028	Elkhart 1" Pistol Grip Nozzle	$776
7700-0029	Akron 1" Pistol Grip Assault Nozzle	$663
7700-0030	Akron 1.5" Assault Nozzle	$717
7700-0031	Nozzle, Akron 1.5" pistol grip - 95 gpm.	$777
7700-0049	PVC Suction Hose 3" X 10' with Pyrolite Couplings	$235
7700-0050	Elkhart 282A Elk-O-Lite Stream Shaper	$182
7700-0051	Elkhart ST-194 Elk-O-Lite Stacked Tips.	$470
7700-0052	Elkhart SM-1250 Select-O-Matic Master Stream Nozzle	$1,116
7700-0053	PVC suction hose 6" X 10' with Pyrolite couplings.	$1,211
7700-0058	Akron Apollo (3433) High Rise Monitor. Include a dual inlet ground base, lift off, and direct mount base.	$3,525
7700-0059	Akron high riser monitor support flange and lift-off for Apollo 3342 Monitor. Ship loose.	$556
7700-0060	Akron Quad Stacked Deluge Tips (2499). For use with Akron monitors. Ship Loose.	$453
7700-0061	Akron Turbomaster Nozzle (1755). Ship Loose.	$1,362
7700-0062	Nozzle Hydro-Foam 1.5" Williams Ranger	$1,899
7700-0065	Nozzle Akron 5160 Manual Akromatic	$1,006
7700-0066	Nozzle 1.5 20-95gpm TFT NH Threads Pistol Grip	$318
7700-0073	Akron Monitor Apollo 3423 portable.	$3,601
7700-0074	Nozzle 1.5" Turbojet high pressure	$396
7700-0076	Booster Hose 1 inch x 200 feet with 800 psi working pressure	$713
7700-0079	TFT 3.5" Stacked Deluge Tips YST-4NN. For use with TFT Monitors. Ship Loose.	$730
7700-0084	Hard Suction Hose Rack 6" Hose (Each).	$368
7700-0089	Booster Reel Hose Shall be install on Reel.	$85
7700-0097	Soft Suction Hose 20ft 5" with 4.5" long handle female coupler on one end and a 4.5" long handle male coupler on the other end.	$1,539
7700-0098	Hard Suction Hose 6" x 6' with Pyrolite Couplings	$840
7700-0103	Nozzle Elkhart SM-3FG Pistol Grip, 1" hose reel.	$682
7700-0104	Booster Hose 100' x 1" Niedner Hotstop fabric booster hose with couplings.	$609
7700-0106	Kochek PVC Hard Suction Hose 6" x 8' with Pyrolite Couplings.	$793
7700-0107	Kochek PVC Hard Suction Hose 4" x 10' with Storz Pyrolite Couplings.	$524
7700-0108	Hose booster rubber 1" X100' Red in color with couplings Darley part number AC696.	$629
7700-0114	Hard suction hose 6" x 8' with Pyrolite couplings.	$838
7700-0115	Kochek PVC Hard Suction Hose 6" x 10' with Pyrolite Couplings.	$861
7700-0116	3" Double Jacket Hose with 2.5" couplings 50' Length 600PSI	$402
7700-0117	Hose, single jacket 50' length 1.5	$205
7700-0118	Akron Brass stacked tips w/stream shaper. Base style 3485 & Stacked Tips style 2499.	$600
7700-0119	Soft Suction Hose 20ft 5" with 6" long handle female swivel coupler on one end and a 4.5" long handle female swivel coupler on the other end.	$1,538
7800-0000	Alco-Lite 8' Folding Ladder.	$302
7800-0002	Alco-Lite FL-10, 10' folding ladder without shoes.	$252
7800-0003	10' folding Duo-Safety 585-A ladder.	$394
7800-0004	Aluminum Cast Bracket for Duo Safety Folding Ladder - For 8' or 10'	$418
7800-0006	Alco-Lite PRL-12 roof ladder.	$402
7800-0007	Alco-Lite PRL-14' roof ladder.	$429
7800-0008	14' roof ladder, Duo-Safety 775-A.	$593
7800-0009	Duo-Safety 16' 875-A roof ladder.	$458
7800-0010	Alco-Lite PRL-16' roof ladder.	$515
7800-0013	Alco-Lite AEL-12 Attic Extension Ladder	$534
7800-0014	Alco-Lite PEL-16 Extension Ladder	$696
7800-0016	Alco-Lite PEL-24' 2-section extension ladder.	$876
7800-0017	Alco-Lite PEL3-24 extension ladder.	$1,262
7800-0018	Extension ladder, Duo-Safety 900-A, 24' 2-section.	$941
7800-0019	Vertical Ladder Bracket	$446
7800-0020	Adjustable Track for Ladder Bracket	$234
7800-0021	Alco-Lite PEL-28' extension ladder.	$1,137
7800-0022	Alco-Lite PEL-30 Extension Ladder	$1,224
7800-0023	Alco-Lite PEL3-35' 3-section extension ladder.	$1,547
7800-0024	Alco-Lite PEL-35' extension ladder.	$1,412
7800-0025	Duo-Safety 1225-A 35' 3-section extension ladder.	$1,568

7800-0027	Little Giant model 17 ladder.	$719
7800-0028	Alco-Lite PEL-14 14' 2-Section Extension Ladder.	$673
7800-0031	Little Giant Model 22 ladder.	$681
7800-0032	Alco-Lite FL-10, 10' folding ladder w/safety shoes.	$252
7800-0033	Duo-Safety 20' 2-section extension ladder 900-A.	$957
7800-0037	Ladder Extension Duo-Safety 3-Section 35 Foot Model 1225-A with a Wellington Puritan #G5732S0600K02 Halyard.	$1,512
7800-0039	Duo-Safety 1225-A 30' 3 Section Extension Ladder	$1,438
7800-0040	Alco-Lite PEL3-28 Extension Ladder	$1,334
7800-0041	Duo-Safety 1200-A, 28' 2-section extension ladder.	$1,155
7800-0043	Duo-Safety 12' 775-A roof ladder.	$395
7800-0044	Alco-Lite PEL-12 Extension Ladder	$590
7800-0045	Duo-Safety 1200-A 35' 2 Section Extension Ladder	$1,451
7800-0047	Duo-Safety 925-A 26' 3-section extension ladder.	$1,045
7800-0053	Alco-Lite AEL-14 Attic Extension Ladder.	$602
7800-0062	Alco-Lite PRL-10 Roof Ladder.	$374
7800-0065	Duo-Safety 24' 2-Section YGE-2 Fiberglass Extension Ladder	$1,344
7800-0066	Duo-Safety 14' YGR Fiberglass Roof Ladder.	$693
7800-0069	Alco-Lite PEL3-35P Extension Ladder w/Stay Poles.	$1,636
7800-0076	Duo-Safety 1200-A 35' 2 Section Extension Ladder. Special custom length ladder 1" shorter than standard in closed position.	$1,451
7800-0077	Duo-Safety 925-A 22' 3 Section Extension Ladder	$1,025
7800-0078	Alco-Lite FL-10, 10' folding ladder without shoes and handles.	$252
7800-0080	Aluminum Cast Bracket for Alcolite Folding Ladder - For 8' or 10'	$418
7800-0082	Alco-Lite FRL-14' roof ladder.	$522
7800-0083	Alco-Lite FEL-24' 2-section extension ladder.	$1,140
7800-0085	14' roof ladder, Duo-Safety 775-DR. Includes folding steel roof hooks on both ends with prong feet.	$626
7800-0087	Alco-Lite FEL3-35 3-section fiberglass extension ladder.	$1,688
7800-0088	10' roof ladder, Duo-Safety 775-DR. Includes folding steel roof hooks on both ends with prong feet.	$552
7800-0089	Duo-Safety 16' roof ladder 875-DR. Includes folding steel roof hooks on both ends with prong feet.	$714
7900-0007	Chrome Barrel Strainer 2.5"	$269
7900-0010	Chrome Barrel Strainer 6" NST.	$337
7900-0011	Strainer Bracket 6".	$104
7900-0012	Galvanized Strainer Basket 6"	$383
7900-0013	Ramsey Portable Winch 5k	$1,033
7900-0014	DOT Required Drive Away Kit - Kit includes three (3) triangular warning reflectors with carrying case. This kit is for the end user and is to remain with the truck.	$29
7900-0016	Ferno Washington Model 71Stokes	$1,060
7900-0031	Handheld flashlight, orange Streamlight Litebox flashlight with vehicle mount system.	$161
7900-0033	Medical Kit w/BLS	$355
7900-0041	Ramsey QM9000, 9000 lb. portable winch.	$1,616
7900-0043	Firecom UH-40 headset.	$433
7900-0045	Poly Box 6" high x 8" wide x 22" deep.	$182
7900-0046	Goodyear front spare tire assembly with aluminum wheel to match front tire / wheel specification.	$1,990
7900-0047	Goodyear rear spare tire assembly with aluminum wheel to match rear tire / wheel specification.	$1,721
7900-0048	Michelin front spare tire assembly with aluminum wheel to match front tire / wheel specification.	$1,805
7900-0049	Michelin rear spare tire assembly with aluminum wheel to match rear tire / wheel specification.	$1,613
7900-0050	Goodyear front spare tire assembly with steel wheel to match front tire specification.	$1,441
7900-0051	Goodyear rear spare tire assembly with steel wheel to match rear tire specification.	$1,164
7900-0052	Michelin front spare tire assembly with steel wheel to match front tire specification.	$1,361
7900-0053	Michelin rear spare tire assembly with steel wheel to match rear tire specification.	$1,042
7900-0054	Handheld Flashlight, Orange Streamlight Survivor LED flashlight with holder and AC/DC charger. Ship loose.	$165
7900-0055	Ferno Millenia 18" wide Backboard	$200
7900-0056	Akron discharge pipe (3488). Ship loose.	$406
7900-0057	Intercom System Setcom Orange County, Reference Quote in Truck File, All Components are to be Shipped Loose for Customer Installation.	$6,004
7900-0058	Diagnostic Software Kit for S-60 Engine, Allison Transmission, and ABS	$7,319
7900-0060	Monitor Akron #3426	$1,293
7900-0061	Firecom UH-10 headset.	$433
7900-0063	Firecom UH-20 headset.	$433
7900-0068	Military ID plate. Info to be supplied at completion of unit.	$128
7900-0086	Road safety Kit ARFF.	$400
7900-0100	A 9000 lb Warn multi-mount (portable) electric reversible winch with 125' of 5/16" galvanized aircraft type cable and a replaceable clevis hook shall be installed and shall be controlled with a 12' remote control switch.	$1,764
7900-0101	Medical glove box. Shipped loose. Includes slotted top for dispensing gloves without opening hinged lid. Box to be same color as interior of cab. Secure lid in closed position with small butterfly latch.	$249
7900-0102	Manual cord reel for 200' of 10/3 wire and a 20amp twist lock connection.	$700
7900-0103	50 foot extension cord with Battery charger recept on one end.	$161

7900-0104	Ramsey QM8000 8000 lb portable winch	$1,537
7900-0106	Fold down computer tray.	$650
7900-0107	Ship spare tire(s) via common carrier to customer location.	$149
7900-0108	Quartz light MagnaFire 750W/120V model KR-SB-836-TM-I with external mount tripod telepole. Shipped loose.	$1,215
7900-0115	A Met-L-X 30# Extinguisher with mounting bracket	$259
7900-0120	HeartStart OnSite Automated External Defibrillator. Unmounted.	$2,029
7900-0121	Diagnostic Software Kit for S-60 Engine, Allison Transmission, ABS and Multiplex System.	$7,507
7900-0128	Flashlight with LED bulb, mounted charger.	$130
7900-0133	Wabco diagnostic software - provided at delivery.	$113
7900-0135	Vest, traffic safety orange nylon mesh.	$14
7900-0143	Monitor Akron #3416	$1,387
7900-0144	TFT XFC 52 Package Crossfire Monitor, SAFE-TAK, Storage Bracket, MasterStream, Quad Stack Tips, Stream Straightener.	$4,552
7900-0147	Map pockets 14 gauge stainless steel (PR). Includes vinyl trim around top of opening and nylon strap with snap to retain contents. Ship loose	$364
7900-0150	One (1) 24' two section fiberglass extension ladder shall be supplied.	$948
7900-0154	Map Box Rectangular Short.	$481
7900-0155	Junkin model JSA-300PCW stokes basket. Ship loose.	$758
7900-0156	Multiplex adapter kit. Includes 6' harness with 9 pin plug/Deutsch ends and a USB to CAN interface module.	$291
7900-0157	Junction box Circle-D with four (4) 3-wire NEMA L5-20 110 volt 20 amp twist lock receptacles. Includes 3' pig tail with 20A TL connector.	$719
7900-0158	Junction box Circle-D with (2) 15 amp straight blade and (2) 20 amp twist lock receptacles. Includes 3' pig tail with 20 amp twist lock connector.	$908
7900-0159	Junction box Circle-D with (2) 15 amp straight blade and (2) 20 amp twist lock receptacles. Includes 20 amp twist lock inlet connector.	$908
7900-0161	Akron 3125 Portable Pyrolite Foam Eductor 125 gpm with 2.5" Swivel Connection.	$660
7900-0166	Computer Panasonic Toughbook 30.	$4,884
7900-0167	Junction box Circle-D with (1) 20 amp straight blade and (3) 20 amp twist lock receptacles. Includes 3' pig tail with 20 amp twist lock connector.	$908
7900-0168	Escutcheon Plate for the FoamPro Vemon Control head shall be ship loose to the customer.	$235
7900-0170	Zico helmet holder model UHH-1 (EA). Ship loose.	$60
7900-0171	Cummins Quick Check 5200 Kit. Ship loose.	$1,780
7900-0172	28" orange traffic cone with (2) reflective stripes.	$55
7900-0173	Junction box Woodhead with four (4) NEMA L5-15 110 Volt 15 Amp twist lock receptacles. Includes 12" pig tail with 20A TL connector.	$1,429
7900-0174	Map Box with Angle Storage. Finish to match cab interior. Ship loose.	$481
7900-0175	Map box suspended with officer's map storage without mounting angles. Finish to match cab interior. Ship loose.	$674
7900-0178	Generator Honda 2KW model EU2000iA with 1.6KW continuous output. Shipped loose.	$1,532
7900-0179	Akron Apollo (3416) Ground Mount, Pyrolite stream shaperand stacked tips base to have single 4" storz inlet.	$3,663
7900-0180	Cascade model CT-PSS1 one piece tapered stainless steel Pro Series stokes basket. Ship loose.	$1,231
7900-0181	Removable Speedlay Tray(s). The floor of the tray(s) to be slotted to prevent the accumulation of water and allow for ventilation of wet hose. This is in addition to the standard speedlay trays and are to be shipped loose.	$581
7900-0182	Removable Poly Speedlay Tray(s). The floor of the tray(s) to be slotted to prevent the accumulation of water and allow for ventilation of wet hose. This is in addition to the standard speedlay trays and are to be shipped loose.	$532
7900-0183	Sign plate smooth 30"x30" shipped loose. Color: Job Color	$231
7900-0193	Junction box Circle-D 3-wire 110V with (2) 20 amp straight blade and (2) 30 amp twist lock receptacles. Includes 12" pig tail with 30 amp twist lock connector.	$908
7900-0194	Tags - Innovative Controls. (7) tags labeled as follows: (5) SCBA Cylinder, (1) O2 Cylinder and (1) 5lb Dry Chem.	$97
7900-0197	Map box suspended with drop-down doors. 34"W x 9.50"H x 12"D. Shipped loose. Map box to be Zolatone gray.	$558
7900-0203	Junction box Circle-D with (3) NEMA 5-20 120V GFCI duplex and (1) NEMA L6-20 220V twist lock receptacle. Includes 3' pig tail with L14-30P TL connector. Shipped loose.	$908
7900-0206	Junction box Akron with (4) 5-15 120v 15 Amp duplex recepts. Includes 12" pigtail with Hubbel L5-20 connector. Ship loose.	$663
7900-0207	FireCom wireless headset. One (1) model UHW-51 (intercom ordered separately).	$775
7900-0208	FireCom wireless headset. One (1) model UHW-54 (intercom ordered separately).	$775
7900-0209	FireCom slotted dome headset. One (1) model UH-51S, (intercom ordered separately).	$494
7900-0210	FireCom headset. One (1) model UH-51 (intercom ordered separately).	$494
7900-0211	FireCom headset. One (1) model UH-52 (intercom ordered separately).	$494
7900-0212	FireCom wireless headset. One (1) model UHW-52 (intercom ordered separately).	$775
7900-0214	FireCom slotted dome headset for wireless intercom. One (1) model UH-51S and one (1) model BP5-10 plug in belt pack to provide wireless headset functionality (intercom ordered separately).	$1,013
7900-0215	FireCom headset. One (1) model UH-54 (intercom ordered separately).	$494
7900-0216	Nederman exhaust transmitter. Shipped loose	$870
7900-0217	Wheel Chocks 32" NFPA Compliant - Pair of Zico AC-32. Up to 32" diameter tires.	$279
7900-0218	Wheel chocks 44" NFPA complaint, pair (PR) of Zico SAC-44. Up to 44" diameter tires.	$590

7900-0222	Diagnostic software for Allison transmission.	$1,111
7900-0223	Front and rear wheel trim kit (ship loose). Includes Real Wheels stainless steel "Cover-Up" covers with E-ONE logo for front IFS and rear tandem axle.	$1,100
7900-0224	Light Fire Research Spectra LED 110V portable model SPA700-K20-703-ON. Location(s): shipped loose.	$2,422
7900-0225	Bostrom SecureAll mechanical air pack bottle bracket (EA) (included in loose equipment).	$499
7900-0226	Junction box Akron with four (4) 3-wire Nema L5-20 110Volt 20 Amp twist lock receptacles. Includes 12" pigtail with L5-20 connector. Ship loose.	$663
7900-0228	V-MUX Electrical system diagnostic kit.	$841
7900-0229	Zinc Plated Strainer Basket 6"	$242
7900-0231	Additional set of pump panel tags.	$185
7900-0232	Hosebed divider(s) short. To run above enhanced extended body to the rear of hose bed approximately 17" long x 22.25" high. Divider(s) to be shipped as loose equipment.	$76
7900-0233	Setcom headset. One (1) model CSB-900 radio transmit capable (intercom system ordered separately).	$489
7900-0234	Setcom headset. One (1) model CSB-901 intercom only (intercom system ordered separately).	$489
7900-0235	Setcom wireless headset with base. One (1) model CSB-900W3 radio transmit capable (intercom system ordered separately).	$1,056
7900-0236	Setcom wireless headset with base. One (1) model CSB-901W3 intercom only (intercom system ordered separately).	$1,056
7900-0237	Junction box with 2' pigtail. Daniel Woodhead with two (2) NEMA L5-20 110V 20A twist lock and two (2) NEMA 5-20 110V 20A duplex receptacles. Includes 2' pigtail wired direct with a male L5-20 plug. Shipped loose.	$1,346
7900-0240	Junction box Akron with two (2) 5-20 120v 20 Amp straight blade duplex receptacles and two (2) L5-20 120v 20 Amp twist lock receptacles. Each receptacle shall be equipped with individual 20A breakers, a spring-loaded snap cover and marked in white lettering with that receptacles voltage and ampere rating. All electrical receptacles, plugs and snap type weatherproof covers shall be UL Listed components. 12" Pigtail that includes wire mesh cord grip with a L14-20 connector. Ship loose.	$663
7900-0242	Junction box Circle-D with four (4) 3-wire Nema 5-20 110Volt 20 Amp duplex household receptacles. Includes 3' pig tail with 20A TL connector.	$719
7900-0243	Exhaust end chrome plated. Due to high heat from current emission exhaust systems, dis-coloring of exhaust end may occur after prolonged use. Ship Loose.	$253
7900-0244	Removable Poly Speedlay Tray(s). The floor of the tray(s) to be slotted to prevent the accumulation of water and allow for ventilation of wet hose. Ship loose.	$532
7900-0245	Junction box Circle-D with three (3) L5-20 120v 20 Amp twist lock receptacles and one (1) 5-20 120v 20 Amp straight blade duplex receptacle. A Circle-D model PF51G four outlet electrical junction box shall be provided and shall have an integral pilot light to indicate electrical current. Each receptacle shall be equipped with individual 20A breakers. 12" Pigtail with a L14-20 4 wire connector. Ship loose.	$908
7900-0246	Removable aluminum speedlay tray(s)for 1.75" DJ hose. The floor of the tray(s) to be slotted to prevent the accumulation of water and allow for ventilation of wet hose. This is in addition to the standard speedlay trays and are to be shipped loose.	$581
7900-0247	Speedlay tray loose equipment - removable. Tray includes a 1.25" extruded alum handle low on each end of tray and slots down each side to facilitate lifting. The floor of the tray shall have poly slides and be slotted to prevent the accumulation of water and allow for ventilation of wet hose.	$580
7900-0248	Pro-Link hand held diagnostic kit. Cummins engine.	$4,639
7900-0250	TFT XFC 52 Package Crossfire Monitor, SAFE-TAK, Storage Bracket, MasterStream, Quad Stack Tips, Stream Straightener	$4,552
7900-0253	Junction box Circle-D with (2) 3-wire NEMA L5-20 110V 20A twist lock receptacles and (2) 3-wire NEMA 5-20 110V 20A household receptacles. Includes 3' pig tail with 20A TL connector.	$719
7900-0255	Floodlight Whelen PFP2AC 110V powder coated black with external mount 50" tripod telepole. Requires 110V receptacle shipped loose.	$3,110
7900-0257	Soft Suction Hose 15ft 6" with 6" long handle female swivel coupler on one end and a 4.5" long handle female swivel coupler on the other end.	$1,242
7900-0258	Spotlight Optronics Blue Eye model KB4003 hand held. Ship loose.	$225
7900-0259	Removable aluminum speedlay tray(s)for 1.75" DJ hose. Tray includes a 1.25" extruded alum handle low on each end of tray and slots down each side to facilitate lifting. The floor of the tray shall have poly slides and be slotted to prevent the accumulation of water and allow for ventilation of wet hose. This is in addition to the standard speedlay trays and are to be shipped loose.	$580
7900-0260	Junction box Circle-D with (2) 15 amp straight blade and (2) 15 amp twist lock receptacles. Includes 3' pig tail with 20 amp twist lock connector.	$908
7900-0262	Additional set of cargo net covers for rear facing medical cabinet opening(s).	$200
7900-0263	Storz 4" mount bracket to be located, and mounted at final inspection.	$118
7900-0265	2100 Gallon Aluminum frame portable folding tank. FDTA 2100 H2 alum w/22 oz. sides and 32 oz. Ship with unit stored in storage tank rack. Color to be yellow.	$1,729
7900-0266	Cup holder / tray for engine cover painted to match cab interior. Approx 14" wide x 10" long with tapered front corners and cup holders at each rear corner. For use in Typhoon and CII with severe duty engine cover. Ship loose.	$396
7900-0273	Junction box Circle-D with four (4) 3-wire NEMA L5-15 110 volt 15 amp twist lock receptacles. Includes 12" pig tail with 15A TL connector.	$719
7900-0274	Junction box Circle-D with (2) 20 amp straight blade and (2) 20 amp twist lock receptacles. Includes 12" pig tail with 20 amp Daniel Woodhead twist lock connector.	$908

7900-0275	TFT AB3ST-NX Intake Valve 6"NST x 5" Storz With Cap	$1,980
7950-0012	Custom Loose Equipment quote for Togus VA. Medica Center Unit.	$17,281
7950-0014	Custom Loose Equipment quote forVA Medical Center Pumper Unit. See attached file for quote 7352-1607-74.	$67,736
7950-0022	Front axle wheel trim kit. Includes stainless steel lug nut covers (chrome plated plastic if applicable) and center cap with E-ONE logo. Note: Center cap will have an inspection port IPO a logo if equipped with Stemco oil seals.	$241
7950-0023	Rear axle (single) wheel trim kit. Includes stainless steel lug nut covers (chrome plated plastic if applicable) and center cap with E-ONE logo. E-ONE custom chassis w/steel wheels will have chrome plated plastic lug covers.	$296
8000	**Painting, Striping, Lettering**	
8100-0065	Paint chassis frame rails, springs, cross-members, fire pump, drivelines, fuel and air tanks, axles, front bumper extensions with brackets and front suction piping (if applicable) shall be painted: [#COL].	$1,845
8100-0070	Paint valve ends job color.	$470
8100-0071	Undercoating E-ONE.	$288
8100-0072	Touch up paint, (1) pint. Dupont paint job color.	$91
8100-0084	All applicable pump/pre-connect application modules are to have a job color finish. Includes upper and lower pump modules, crosswalk module and/or speedlay/pre-connect module (as applicable). Rear mounted body/pump module to be painted job color.	$600
8100-0088	Painted trim stripe on chassis wheels (per axle). Color to be: [#COL].	$175
8100-0091	Paint entire front of body job color. Stainless steel bodies only.	$2,149
8100-0092	Paint entire rear of body job color. Stainless steel bodies only.	$2,149
8100-0096	Paint rear tow eye assemblies job color IPO black.	$273
8100-0097	Paint the pump job color.	$573
8100-0100	Special paint break. See sketch / drawing / photo in sales file.	$189
8100-0102	Chassis axle ends to be painted job color.	$301
8100-0108	Front wheels to be painted on the inboard side (same color as outboard side).	$309
8100-0109	Rear wheels (4) to be painted on the inboard side (same color as outboard side). Includes outboard side of the inboard wheels.	$617
8100-0115	Paint valve ends 767681EG Black.	$470
8100-0117	Paint cab/body with approved metallic paint color.	$2,713
8100-0166	Painted stripe - 12" wide and straight on front, sides and rear of cab and body. Color: [#COL]. Location: [#LOC].	$4,417
8100-0168	All rearward facing access door(s) and pump//bleeder panel(s) to be painted job color.	$917
8100-0170	Painted Stripe - 6" wide with "Z". Stripe straight on front, sides and rear of cab and body. "Z" location to be specified by customer. Color: [#COL]. Location: [#LOC].	$4,417
8100-0172	Paint body two tone color. Paint break will be just above door drip rail. DuPont paint. Color: [#COL].	$1,904
8100-0173	Paint mid-mount boom body module job color.	$942
8100-0176	Paint E-ONE chassis cab - Sikkens paint. Color: [#COL].	$5,492
8100-0177	Paint cab Sikkens two-tone. Upper area of cab to be painted [#COL].	$1,237
8100-0181	Paint body two-tone color - Sikkens paint: Color: [#COL].	$1,904
8100-0182	Paint Body - Small - For Pumpers, Rear Mounts, S/A Tankers/Wetsides and Rescues. Sikkens paint. Color: [#COL].	$1,691
8100-0183	Paint Body - Large - For Aerials, T/A Tankers/Wetsides, Rear Mounts and Rescues. Sikkens paint. Color: [#COL].	$4,187
8100-0184	Paint body stainless steel -Small. Sikkens paint. Color: [#COL].	$5,142
8100-0188	Durabak coating for all cab and body handrails.	$1,406
8100-0222	Paint all roll up door header plate(s) job color.	$776
8100-0223	The pump/ladder/hardsuction access door and recessed box for directional lightbar to be painted job color.	$304
8100-0225	Paint the pump. Color: [#COL].	$573
8100-0226	Medical cabinet exterior roll-up door two-tone paint adjustment (EA). Includes dis-assembly/re-assembly of existing two-tone roll-up door to match cab paint break.	$457
8100-0227	Standard paint process for the exterior of stainless steel bodies. Sikkens paint. Color: [#COL].	$1,691
8100-0228	FRP painted exterior panels IPO standard paint process for stainless steel bodies. Available only on stainless steel pumper bodies that have roll-up doors. Provides a credit versus the standard painting process. Sikkens paint. Color: [#COL].	-$3,640
8100-0231	Undercoating E-One chassis only.	$214
8100-0233	FRP painted exterior panels IPO standard paint process for stainless steel bodies. Available only on stainless steel rescue pumper bodies that have roll-up doors. Provides a credit versus the standard painting process. Sikkens paint. Color: [#COL].	-$3,640
8100-0361	Rear body surface to have a painted job color finish. Includes hinged doors that do not have discrete sales codes and removable panels.	$854
8100-0362	Paint body two tone color. Paint break will be just above the body compartment top. Sikkens paint. Color: [#COL].	$1,904
8100-0372	Paint cab two-tone with approved metallic flake paint color.	$679
8100-0373	Front cab grille mesh painted FLNA4001 white with [#COL] painted letters. Sales to provide detail of letters to provide.	$592
8100-0375	LizardSkin under cab insulation. Includes all exterior under cab surfaces exposed to interior crew compartment.	$3,133
8100-0376	Side facing extrusions of pump module to have swirled finished.	$171

8100-0382	Interior of front bumper trays and running board suction trays to be painted with black Durabak. Includes driver side, officer side and center front bumper trays. Driver side and officer side running board suction trays.	$592
8100-0383	Paint Newton Dump job color.	$510
8100-0385	Outline for painted letter on cab grille (EA) - 18". CIIX cabs only. Color: [#COL].	$127
8100-0388	Chassis fuel tank to have undercoating applied prior to installation on frame.	$201
8100-0389	Standard paint process for the exterior of large stainless steel bodies. Sikkens paint. Color: [#COL].	$4,187
8100-0394	Paint body two-tone color. Paint break will be just above the body compartment opening. Sikkens paint. Color: [#COL].	$1,904
8100-0398	Paint swivel chute job color.	$634
8100-0401	Paint front and rear axle hubs primary job color.	$1,301
8100-0403	Black Durabak coating on fuel tank.	$407
8100-0406	Paint foam discharge and intake valves [#COL].	$470
8100-0410	Black Durabak coating on pump master drain bracket.	$47
8100-0412	Zolatone finish gray in color for the upper pump module on the officer side where the E-ONE logo is mounted.	$183
8100-0413	Front cab grille mesh painted FLNA4006 white with [#COL] painted letters. Sales to provide detail of letters to provide.	$592
8100-0416	Front cab grille mesh painted with the waving United States flag.	$1,512
8100-0421	Paint air conditioning condenser cover. Color: [#COL].	$775
8100-0424	Front cab grille mesh painted with the waving Maryland flag.	$1,512
8100-0426	The driver and officer side roof top compartment interiors shall be painted Scorpion Black (smooth finish).	$572
8100-0428	FRP painted upper side sheet exterior panels IPO standard paint process for stainless steel bodies. Available only on stainless steel tanker bodies that have lower hinged doors and painted body. Provides a credit versus the standard painting process. Sikkens paint. Color: [#COL].	-$1,303
8100-0431	Brow light brackets (not housing) shall be painted [#COL]. This shall include forward, rear and side facing if so equipped.	$171
8100-0436	All applicable pump/pre-connect application modules are to have a job color finish. Paint the entire pump module inside and outside before loading onto the chassis.	$1,198
8100-0439	Painted crosswalk area to include all smooth plate and flat extruded surfaces exposed to the exterior forward and rearward of the crosswalk area.	$600
8100-0447	FRP painted exterior panels IPO standard paint process for stainless steel bodies. Available only on stainless steel LBT bodies that have roll-up doors. Sikkens paint. Color: [#COL].	$3,567
8100-0448	FRP painted exterior panels IPO standard paint process for stainless steel bodies. Available only on stainless steel tanker bodies that have roll-up doors. Provides a credit versus the standard painting process. Sikkens paint. Color: [#COL].	-$4,774
8100-0449	Rear inboard wheels (2) to be painted on the outboard side (same color as outer wheels). Allowing for wheels to be rotated on the rear axle.	$308
8100-0456	Paint all applicable roll up door header plate(s) 2-tone job color.	$776
8100-0457	Paint body two-tone color - Sikkens paint. Locate at the bottom of roll-up door header. Color: [#COL].	$1,904
8100-0458	Special paint break body two-tone color - Sikkens paint: Color: [#COL]. See sketch / drawing / photo in sales file.	$1,904
8100-0459	The ground ladder brackets, pike pole tubes and folding ladder trough to be painted job color.	$634
8100-0460	Paint pump module two tone inline with body.	$213
8100-0467	Paint chassis frame rails, springs, cross-members, fire pump, drivelines, air tanks, axles, front bumper extensions with brackets and front suction piping (if applicable) shall be painted: [#COL]. Does not include fuel tank.	$1,845
8100-0468	FRP painted exterior panels replacement set for stainless steel tanker bodies. Provides the standard painting process on the panels. Sikkens paint. Color: [#COL].	$2,327
8100-0472	Paint intake valve ends 767681EG Black. (DO NOT PAINT PLUGS & SWIVELS)	$235
8100-0473	Front cab grille mesh painted with the waving Canadian flag.	$1,512
8100-0476	Brackets painted Durabak black. Includes rear aerial style brackets, rear camera cover.	$171
8100-0477	Paint front cab grille upper two tone job color.	$652
8100-0479	SCBA doors on the rear body wheel well panels to be painted to match the body color.	$269
8100-0480	Upper panels rearward of upper module storage compartment to be aluminum smooth plate painted job color.	$237
8100-0481	Black Linex coating on top of the of standard diamond plate: Install on; Pump panel running boards, body compartment tops, enhanced extended compartment steps and rear tailboard.	$3,290
8100-0488	Paint rear tow eye assemblies yellow IPO black.	$273
8100-0491	Front cab grille mesh painted FLNA4145 black with [#COL] painted letters. Sales to provide detail of letters to provide.	$592
8150-0012	The interior of the backboard storage compartment to be painted OTO gray. Includes inside surfaces of backboard doors and upper cover plate.	$600
8150-0021	The interior of the backboard storage compartment to be painted Zolatone gray. Includes inside surfaces of backboard doors and upper cover plate.	$600
8150-0023	Interior cab handrails/window bars painted safety yellow.	$224
8200-0000	Scotchlite Letter (Each) - 3". Color [#COL].	$9
8200-0001	Scotchlite Letter (Each) - 6". Color [#COL].	$11
8200-0002	Scotchlite Letter (Each) - 9". Color [#COL].	$12
8200-0003	Scotchlite Letter (Each) - 12". Color [#COL].	$12
8200-0004	Scotchlite Letter (Each) - 15". Color [#COL].	$14

8200-0005	Scotchlite Letter (Each) - 18". Color [#COL].	$16
8200-0006	Maltese cross 12" (Pair).	$1,109
8200-0007	Sign Gold Letter (Each) - 3".	$13
8200-0008	Sign Gold Letter (Each) - 6"	$19
8200-0009	Sign Gold Letter (Each) - 9"	$29
8200-0010	Sign Gold Letter (Each) - 12"	$29
8200-0011	Scotchlite Letters (60) - 3". Color [#COL].	$748
8200-0012	Sign Gold Letters (60) - 3".	$1,088
8200-0013	Shade for lettering.	$5
8200-0014	Sign "Stay Back 500FT" with black reflective lettering. Locate below rear of body.	$132
8200-0015	White reflective tape on (2) outriggers.	$217
8200-0018	Scotchlite Letters (90) - 3". Color [#COL].	$933
8200-0019	Scotchlite Letters (120) - 3". Color [#COL].	$1,118
8200-0020	Sign Gold Letters (90) - 3".	$1,447
8200-0021	Sign Gold Letters (120) - 3".	$1,803
8200-0022	Shade and outline for lettering.	$6
8200-0024	Reflexite Letter (Each) - 18". [#COL] Reflexite letter(s) stitched to vinyl hosebed cover end flap.	$65
8200-0025	Reflexite Letter (Each) - 6". [#COL] Reflexite letter(s) stitched to vinyl hosebed cover end flap.	$37
8200-0026	Die cut letter in stripe (EA).	$24
8200-0027	Scotchlite Letter (Each) - 5". Color [#COL].	$11
8200-0028	Sign Gold Letter (Each) - 5"	$19
8200-0029	Scotchlite Letter (Each) - 10". Color [#COL].	$13
8200-0030	Sign Gold Letter (Each) - 10"	$29
8200-0031	Scotchlite Letter (Each) - 30". Color [#COL].	$20
8200-0032	Scotchlite letter each 24" [#COL].	$18
8200-0033	Scotchlite letter (each) - 8". Color [#COL].	$13
8200-0034	Scotchlite Letter (Each) - 16". Color [#COL].	$14
8200-0036	Scotchlite Letter (Each) - 4". Color [#COL].	$10
8200-0038	Reflexite Letter (Each) - 12". [#COL] Reflexite letter(s) stitched to vinyl hose bed cover end flap.	$52
8200-0039	Maltese Cross SignGold up to 18" dia (PR) with new layout.	$1,000
8200-0040	Gold leaf letters (90) - 3".	$3,611
8200-0042	Gold leaf lettering and corner scroll package. Package contains (112) 3" gold leaf letters and (4) E-One style golf leaf corner scrolls. Corners scrolls located on forward upper corners of L3/R3 doors and rearward upper corners of L5/R5 doors.	$4,500
8200-0044	Reflexite Letter (Each) - 8". [#COL] Reflexite letter(s) stitched to vinyl hosebed cover end flap.	$43
8200-0045	Gold leaf letters (120) - 3".	$4,202
8200-0046	Scotchlite Letter (Each) - 27". Color [#COL].	$19
8200-0047	Sign Gold Letter (Each) - 4"	$15
8200-0048	Sign Gold Letters (120) - 4".	$2,217
8200-0052	Sign Gold Letter (Each) - 8"	$29
8200-0056	Reflexite Letter (Each) - 8". White Reflexite letter(s) stitched to vinyl hosebed cover end flap and top of hosebed cover. Lettering Instructions: NMFD E-2	$43
8200-0061	Scotchlite Letter (Each) - 2". Color [#COL].	$8
8200-0068	Painted letter on cab grille (EA) - 18". CIIX cabs only. Color: [#COL].	$127
8200-0070	Scotchlite Letter (Each) - 1.25". Color Black. To read: VIST OUR WEB SITE AT: WWW.PALMHARBORFD.COM	$7
8200-0072	Reflexite Letter (Each) - (6) 12" and (1) 14". Yellow Reflexite letter(s) stitched to vinyl hosebed cover end flap. The 12" letters to read "ENGINE" with 14" letter "1" split between "ENG" and "INE".	$53
8200-0073	Sign Gold Letter (Each) - 3". Sign Gold to be small turn style.	$16
8200-0074	Maltese Cross SignGold up to 15" dia (PR) with new layout.	$805
8200-0075	Reflexite Letter (Each) - 10". [#COL] Reflexite letter(s) stitched to vinyl hose bed cover end flap.	$47
8200-0079	Reflexite Letter (Each) - 4". White Reflexite letter(s) stitched to vinyl hosebed cover end flap. Lettering Instructions: ANCRAM 79-1	$32
8200-0081	Etched Vinyl Letter (Each) - 5"	$19
8200-0084	Scotchlite Letter (Each) - 1". Color [#COL].	$8
8200-0086	Sign Gold Letter (Each) - 16".	$35
8200-0088	Gold leaf letter (Each) - 4".	$67
8200-0089	Gold leaf letters (EA) - 3".	$41
8200-0090	Sign Silver Letter (Each) - 3"	$13
8200-0091	Sign Silver Letter (Each) - 12"	$29
8200-0098	Scotchlite letter each 20" [#COL].	$17
8200-0100	Sign Gold Letter (Each) - 2".	$13
8300-0002	NFPA Scotchlite Stripe - 4" wide and straight on front/sides of cab and sides/rear of body. Color: [#COL]. Location: [#LOC].	$714
8300-0003	NFPA Scotchlite Stripe - 6" wide and straight on front/sides of cab and sides/rear of body. Color: [#COL]. Location: [#LOC].	$722
8300-0006	NFPA Scotchlite Stripe - 6" wide with "Z". Stripe straight on front, sides and rear of cab and body. "Z" location to be specified by customer. Color: [#COL]. Location: [#LOC].	$1,142
8300-0008	NFPA Scotchlite Stripe - 5" wide with "S". Stripe straight on front, sides and rear of cab and body. "S" location to be specified by customer. Color: [#COL]. Location: [#LOC].	$1,275
8300-0009	NFPA Scotchlite Stripe - 5" wide with double "S". Stripe straight on front, sides and rear of cab and body. Double "S" locations to be specified by customer. Color: [#COL]. Location: [#LOC].	$1,559
8300-0011	Scotchlite stripe (PR) 1/2" located 1/2" above and below existing stripe. Color: [#COL].	$532

8300-0012	Scotchlite stripes (4) 1/2" located (2) above and (2) below existing stripe. Stripes to be spaced 1/2" apart. Color: [#COL].	$1,057
8300-0013	NFPA Scotchlite Stripe - 2" and 4" wide with "Z". Stripe straight on front, sides and rear of cab and body. "Z" location to be specified by customer. 2" above 4" with 1" gap between stripes. Color: [#COL]. Location: [#LOC].	$1,613
8300-0016	Paint Break Sign Gold Chassis Stripe - 3/4" Wide - Black, Gold, Black. To be located above existing paint break.	$250
8300-0018	Sign gold scroll for body door with shade (Ea). Location: [#LOC]	$176
8300-0019	Sign gold scroll for body door (Ea). Location: [#LOC]	$57
8300-0024	Red/White rubrail scotchlite insert.	$207
8300-0025	1/4" Pin stripe above and below existing Scotchlite stripe. Color: [#COL].	$852
8300-0026	Scotchlite stripe 1" located 1" above and below existing stripe. Color: [#COL].	$637
8300-0027	NFPA Scotchlite 4" wide hockey stripe, straight across front and may contour as it transitions from cab to body on each side. Color: [#COL]. Location: [#LOC].	$858
8300-0028	NFPA Scotchlite 6" wide hockey stripe, straight across front and may contour as it transitions from Cab to Body on each side. Color: [#COL]. Location: [#LOC].	$867
8300-0030	NFPA Scotchlite 10" wide hockey stripe, straight across front and may contour as it transitions from Cab to Body on each side. Color: [#COL]. Location: [#LOC].	$1,158
8300-0032	Chevron "A" style 4" Scotchlite striping on rear of body. Includes rear facing extrusions, panels and doors inboard/outboard of the beavertails(if applicable). Colors to be [#COL].	$3,373
8300-0033	NFPA Scotchlite Stripe - 8" wide and straight on front/sides of cab and sides/rear of body. Color: [#COL]. Location: [#LOC].	$892
8300-0034	Scotchlite stripe 2" located 1" above existing stripe. Color: [#COL].	$404
8300-0036	NFPA Scotchlite Stripe - 8" wide with "S". Stripe straight on front, sides and rear of cab and body. "S" location to be specified by customer. Color: [#COL]. Location: [#LOC].	$1,449
8300-0037	Chevron "V" style 4" Scotchlite striping on rear of body. Includes rear facing extrusions, panels and doors inboard/outboard of the beavertails(if applicable). Colors to be [#COL].	$3,373
8300-0038	Scotchlite stripe 2" located 1" above and below existing stripe. Color: [#COL].	$807
8300-0039	Scotchlite stripe 1" located .5" above and below existing stripe. Color: [#COL].	$673
8300-0040	Signgold border .5" for logo.	$417
8300-0041	Sign gold scroll (14) for body doors with connecting .5" sign gold stripe.	$2,468
8300-0043	NFPA Scotchlite double 2" wide hockey with 1" between stripes, straight across front and may contour as it transitions from Cab to Body on each side. Color: [#COL]. Location: [#LOC].	$2,317
8300-0044	Scotchlite stripe 1" located 1" above existing stripe. Color: [#COL].	$337
8300-0045	1/4" pinstripe. Color: [#COL]. Location: At cab paint break	$187
8300-0046	Scotchlite stripe (PR) 1/2" located directly above and below existing stripe. Color: [#COL].	$668
8300-0048	Paint break Scotchlite chassis stripe - 3/4" Wide - Black, [#COL], Black. To be located above existing paint break.	$150
8300-0049	Signgold body scroll package. (1) each upper corner L1, L3, R1, R3 and (1) each lower corner L2, R2 with connecting 3/4" signgold stripe. See photos on file with sales.	$2,444
8300-0050	Scotchlite stripe (PR) 1" located directly above and below existing stripe on satin roll-up doors only. Color: [#COL].	$532
8300-0051	Scotchlite hockey stripe. Striping from bottom to top with no spacing between as follows: 1" white, 1/4" blue, 5.75" white, 1/4" black, 1/8" gold, 1/4" black, 1.375" white fading to blue at front cab corners, 1/2" black, 1/2" white. Location: bottom of stripes even with top of gravel shield; hockey at L1/R1.	$5,059
8300-0052	Chevron "V" style Scotchlite striping on rear of body outboard of beavertails (if equipped). Colors to be [#COL].	$1,000
8300-0053	Signgold body scroll package. (1) front lower corner L2 and (1) rear lower corner L5 with connecting 3/4" signgold stripe. (4) R1 (each corner) with connecting 3/4" signgold stripe. (1) R2 lower front corner and (1) R5 lower rear corner with connecting 3/4" signgold stripe.	$1,517
8300-0056	Chevron "A" style 4" individual Scotchlite striping on front bumper. Colors to be [#COL].	$1,393
8300-0057	Arched stripe 6"/2" on front cab door and blend into a straight body stripe. Includes stripe on front bumper. Color: [#COL]	$2,317
8300-0058	Chevron "V" style 4" Scotchlite striping on rear B1 compt door, (3) stripes. Colors to be red/white/black pinstripe.	$874
8300-0059	NFPA Scotchlite Stripe - 10" wide and straight on front, sides and rear of cab and body. Color: [#COL]. Location: [#LOC].	$1,176
8300-0060	Scotchlite Stripe - 5" wide straight on front front of cab below windshield end at radius corners. Color: [#COL].	$238
8300-0061	Chevron "A" style 6" individual Scotchlite striping full width on rear of body. Includes rear facing extrusions, panels and doors. Colors to be [#COL].	$1,779
8300-0062	Chevron "A" style Scotchlite striping on rear of body outboard of beavertails (if equipped). Colors to be [#COL].	$1,000
8300-0063	Scotchlite Stripe - Quest Demo. Includes large "Quest" letters that are arched to match cab window line with triple stripe along body. Includes straight stripe on front and rear of apparatus for NFPA compliance. Color: [#COL].	$2,419
8300-0066	NFPA Scotchlite Stripe - 4" wide with "Z". Stripe straight on front, sides and rear of cab and body. "Z" location to be specified by customer. Color: [#COL]. Location: [#LOC].	$1,133
8300-0067	Chevron "A" style 4" Scotchlite striping on rear of body outside of beavertails. Colors to be [#COL].	$1,393
8300-0068	NFPA Scotchlite Stripe - 10" wide with "S". Stripe straight on front, sides and rear of cab and body. "S" location to be specified by customer. Color: [#COL]. Location: [#LOC].	$3,704
8300-0070	Chevron "A" style 4" Scotchlite striping on rear of body between beavertails. Colors to be [#COL].	$1,919

8300-0072	NFPA Scotchlite Stripe - 10" wide with "Z". Stripe straight on front, sides and rear of cab and body. "Z" location to be specified by customer. Color: [#COL]. Location: [#LOC].	$1,951
8300-0075	Sign gold scroll (4 ea side) for body with connecting .75" sign gold body stripe. See photo/drawing on file with sales.	$2,133
8300-0076	Chevron "A" style 4" Scotchlite striping on rear of body between beavertails; body panels and extrusions only (No doors). Colors to be [#COL].	$1,073
8300-0077	Chevron "A" style Scotchlite striping on rear B1 compt door. Colors to be [#COL].	$1,689
8300-0078	Chevron "A" style 4" 3M "Diamond Grade" striping on rear of body. Includes rear facing extrusions, panels and doors inboard/outboard of the beavertails(if applicable). Colors to be [#COL].	$4,216
8300-0079	Chevron "A" style 4" 3M "Diamond Grade" striping on rear pump panel/bleeder panel(s). Colors to be [#COL].	$704
8300-0080	Chevron "A" style 4" 3M "Diamond Grade" striping on front bumper. Colors to be [#COL].	$1,742
8300-0081	Chevron "A" style 3M "Diamond Grade" striping on rear of body outboard of beavertails (if equipped). Colors to be [#COL].	$1,251
8300-0084	Chevron "A" style 6" printed sheet Scotchlite striping full width on rear of body. Includes rear facing extrusions, panels and doors. Colors to be [#COL].	$1,388
8300-0085	Scotchlite stripe 1" located directly above and below existing stripe. Color: [#COL].	$637
8300-0088	NFPA Scotchlite Stripe - 4" wide and straight on sides and rear of body only. Color: [#COL]. Location: [#LOC].	$787
8300-0089	Gold leaf scroll and stripe package. Includes 3/4" stripes w/outline vertically on forward L1/R1 and rearward on L3/R3 body doors with connecting horizontal stripe on upper doors. Stripes to end with spear above scotchlite stripe. Custom scrolls over L2/R2 d-rings and front cab doors. 3/4" chassis stripe w/outline, custom scrolls rearward and spear forward. See photos on file with sales.	$5,106
8300-0090	Scotchlite stripe 1.5" located directly above and below existing stripe. Color: [#COL].	$675
8300-0091	1/4" Scotchlite pinstripe above and below existing stripe. Color: [#COL].	$972
8300-0093	Chevron "A" style 6" printed sheet Scotchlite striping on front bumper. Colors to be [#COL].	$572
8300-0094	Chevron "A" style 4" Scotchlite striping on rear body panels only, no extrusions. Colors to be [#COL].	$2,530
8300-0095	Sign Gold cab and body stripe - 3/4" wide - Black, Gold, Black. To be located at lower cab and body sides and contour over wheel wells (if applicable). See addtional photos on file.	$950
8300-0099	Chevron "A" style 6" printed sheet Scotchlite striping on rear of body between beavertails. Colors to be [#COL].	$1,092
8300-0101	Black rubrail scotchlite insert.	$207
8300-0102	Gold leaf scroll and stripe package. Includes 1/2" stripes around perimeter of driver and officer side assemblies with (4) corner scrolls each side in the corners. See sketch on file.	$5,668
8300-0103	Chevron "A" style 6" Scotchlite striping on rear B1 compt door. Colors to be [#COL].	$1,689
8300-0104	Chevron "V" style 3" Scotchlite striping on rear of body. Colors to be Red/White/Blue.	$3,373
8300-0109	Chevron "A" style 6" 3M "Diamond Grade" striping on rear of body. Includes rear facing extrusions, panels and doors inboard/outboard of the beavertails(if applicable). Colors to be [#COL].	$4,216
8300-0111	Chevron "A" style 6" individual Scotchlite striping on rear of body except for the pump/ladder tunnel access door. Colors to be [#COL].	$3,373
8300-0112	Chevron "A" style 6" Scotchlite striping on rear facing side of the slide out room. Colors to be [#COL].	$1,689
8300-0114	Chevron "A" style 6" individual Scotchlite striping full width on rear of body. Includes rear facing compartment face, extrusions, panels and doors. Does not include center lower pump panel. Colors to be [#COL].	$1,779
8300-0115	Chevron "A" style 6" printed pattern Scotchlite striping full width on rear of body. Includes rear facing compartment face, extrusions, panels and doors. Does not include center lower pump panel. Colors to be [#COL].	$1,388
8300-0116	Chevron "A" style 6" printed pattern Scotchlite striping on the upper center pump/storage access. Colors to be [#COL].	$434
8300-0117	Chevron "A" style 6" individual Scotchlite striping on the upper center pump/storage access. Colors to be [#COL].	$596
8300-0120	Chevron "A" style 6" 3M "Diamond Grade" striping on front bumper. Colors to be [#COL].	$1,742
8300-0125	Reflective [#COL] striping positioned in the "A" formation located in the lower door panel (EA). Location: [#LOC].	$70
8300-0126	Red/White scotchlite. Locate on front of roll-out tray(s), front lip of adjustable/fixed shelves and tool board(s) on outer vertical edge on both sides.	$415
8300-0142	Chevron "A" style 6" individual Scotchlite striping on front bumper. Colors to be [#COL].	$715
8300-0143	NFPA Scotchlite Stripe - three stripes 3" wide with "Z" with 1" gap between stripes. Stripe straight on front, sides and rear of cab and body. "Z" location to be specified by customer. Color: top stripe - Yellow, middle stripe - White, bottom stripe - Black. Location: top of bottom stripe flush with top of bumper and straight back.	$3,111
8300-0144	Chevron "A" style 6" 3M "Diamond Grade" striping on rear of body (does not include the B1 door). Includes rear facing extrusions, panels and doors inboard/outboard of the beavertails(if applicable). Colors to be [#COL].	$1,773
8300-0145	Chevron "A" style 6" 3M "Diamond Grade" striping on front bumper. Colors to be [#COL].	$847
8300-0146	Chevron "A" style 6" 3M "Diamond Grade" striping full width on rear of body. Includes rear facing extrusions, panels and doors. Colors to be [#COL].	$2,338
8300-0147	Sign Gold Stripe - 3/4" Wide - Black, Gold, Black. To be located above and below scotchlite stripe.	$1,899

8300-0148	Sign gold scroll (4 ea side) for body with connecting .75" sign gold body stripe and white painted pin stripe.	$2,971
8300-0150	Chevron "A" style 6" printed sheet Scotchlite striping on rear of body. Includes rear facing extrusions, panels and doors inboard/outboard of the beavertails (if applicable). Colors to be [#COL].	$1,208
8300-0152	Chevron "A" style 6" 3M "Diamond Grade" Scotchlite striping full width on rear of body. Includes rear facing compartment face, extrusions, panels and doors. Does not include center lower pump panel. Colors to be [#COL].	$2,338
8300-0153	Chevron "A" style 6" 3M "Diamond Grade" Scotchlite striping on the upper center pump/storage access. Colors to be [#COL].	$739
8300-0154	Chevron "A" style 6" 3M "Diamond Grade" striping on rear of body. Includes rear facing extrusions, panels and doors inboard of the beavertails(if applicable). Colors to be [#COL].	$2,045
8300-0155	NFPA Scotchlite Stripe - 4" wide with ribbon style "Z". Stripe straight on front, sides and rear of cab and body. "Z" location to be specified by customer. Color: [#COL]. Location: [#LOC].	$1,142
8300-0159	Red/Yellow scotchlite. Locate on front of roll-out tray(s), front lip of adjustable/fixed shelves and tool board(s) on outer vertical edge on both sides.	$415
8300-0160	Chevron "A" style 6" printed sheet Scotchlite striping on front and rear faces of overhead ladder rack. Colors to be [#COL].	$405
8300-0161	NFPA Scotchlite stripe. Pasco County double half "S" stripe with 1" black, 1/2" white, 4" red, 1/2" white. See photos on file with sales.	$2,091
8300-0162	Scotchlite stripe 1" located 1" below existing stripe. Color: [#COL].	$337
8300-0165	Chevron "A" style 6" printed sheet Scotchlite striping on outer panel of beavertails. Colors to be [#COL].	$430
8300-0167	White Diamond Grade Scotchlite. Locate on front of roll-out tray(s), front lip of adjustable/fixed shelves and tool board(s) on outer vertical edge on both sides.	$415
8300-0169	NFPA Scotchlite Stripe - 6" wide with "Z". Stripe straight on front, sides and rear of cab and body. "Z" location to be specified by customer. Color: White on cab and body / Ruby Red on body doors. Location: bottom of stripe flush with top of bumper and straight back.	$1,142
8300-0179	Chevron "A" style 6" printed sheet Scotchlite striping on rear of body. Includes rear facing extrusions, panels, inboard/outboard of the beavertails (if applicable). Does not include the rear door(s). Colors to be Yellow/Red.	$1,147
8300-0181	Paint Break Sign Gold Chassis Stripe - 3/4" Wide - Black, Gold, Black. Sign Gold to be small turn style. To be located above existing paint break.	$501
8300-0183	NFPA Scotchlite Stripe - 1"/1"/.25"/4"/.25"/1"/1" wide with "Z". Stripe straight on front, sides and rear of cab and body. "Z" location to be specified by customer. Lower portion of stripes will continue rearward after "Z". There will be a 1/4" gap between stripes. Color: Blue/White/Blue/White/Blue/White/Blue. Location: bottom of stripe flush with top of bumper and straight back.	$3,235
8300-0186	NFPA Scotchlite Stripe - 2" and 6" wide with "Z". Stripe straight on front, sides and rear of cab and body. "Z" location to be specified by customer. 2" above 6" with 1" gap between stripes. 6" stripe to have a .25" outline above and below. Color: [#COL]. Location: [#LOC].	$1,613
8300-0189	Scotchlite striping on front bumper 6". Color to be [#COL].	$715
8300-0190	Chevron "A" style 6" 3M "Diamond Grade" striping on rear of body (does not include the B1 door). Includes rear facing extrusions, panels and doors inboard/outboard of the beavertails(if applicable). Colors to be [#COL].	$1,773
8300-0191	Paint break Scotchlite chassis stripe - 1/4" Wide - [#COL]. To be located above existing paint break.	$464
8300-0192	NFPA Scotchlite Stripe - 8" and 3" wide with "Z". Stripe straight on front, sides and rear of cab and body. "Z" location to be specified by customer. 8" above 3" with 1.5" gap between stripes. Color: White. Location: Center of the 8" stripe centered with Quad bezel (in between upper and lower bezel) and straight back.	$2,120
8300-0193	Chevron "A" style 3M "Diamond Grade" Dots in 6" striping pattern on rear of body (does not include the B1 door). Includes rear facing extrusions, panels and doors inboard of the beavertails (if applicable). Colors to be [#COL].	$2,641
8300-0194	Install dealer supplied Scotchlite pinstripe above and below existing stripe. Color: Blue.	$522
8300-0195	Sign gold .75" stripe and scroll package. Total of (5) scrolls for body (1) in each upper forward corner of L1,R1,L3 and upper rearward corner of L2,R2 with connecting stripes, side dump panels to have rearward vertical stripe, the cab to have stripe contouring the wheel wells and around front of cab. All stripes to have red scotchlite pin stripe.	$3,486
8300-0197	Scotchlite stripe 1" located 1" down from top of stripe and 1" up from bottom of stripe (1"stripes on existing stripe). Color: [#COL].	$673
8300-0198	NFPA Scotchlite Stripe - 8" wide with "Z". Stripe straight on front, sides and rear of cab and body. "Z" location to be specified by customer. Color: [#COL]. Location: [#LOC].	$2,120
8300-0199	Sign Gold Body Stripe - 1" Wide - Black, Gold, Black, located .5" above and below existing stripe.	$1,261
8300-0200	Scotchlite stripe 2" located 2" below existing stripe. Color: [#COL].	$795
8300-0201	Chevron "A" style 6" 3M "Diamond Grade" striping on ladder rack lowering arms. The Chevron shall be applied to the rear and forward arm surfaces only. Colors to be [#COL].	$333
8300-0202	Sign Gold Stripe - 1" Wide - Black, Gold, Black. To be located above and below scotchlite stripe.	$1,779
8300-0205	NFPA Scotchlite Stripe - 4" wide with double ribbon. Double ribbon locations to be specified by customer. Color: [#COL]. Location: [#LOC].	$1,559
8300-0206	Red rubrail scotchlite insert.	$207
8300-0209	NFPA Scotchlite Stripe - 10" wide with pin striping above and below. Pin striping thickness and spacing shall be as specified in shop order and straight on front, sides and rear of cab and body. Color: [#COL]. Location: [#LOC].	$1,484

8300-0210	There will be reflective tape added to the front and both sides of all roll-out trays to aid in visibility. Tape will be [#COL] in color.	$1,062
8300-0214	Chevron "A" style 6" printed sheet Scotchlite striping stitched to vinyl hosebed cover end flap. Colors to be [#COL].	$430
8300-0216	Scotchlite 3" wide hockey stripe, straight across front and may contour as it transitions from cab to body on each side. Color: [#COL]. Location: [#LOC].	$858
8300-0217	NFPA Scotchlite Stripe - 1" and 6" wide with "Z". Stripe straight on front, sides and rear of cab and body. "Z" location to be specified by customer. 1" above 6" with 1" gap between stripes. 6" stripe to have a .25" outline above and below. Color: [#COL]. Location: [#LOC].	$1,613
8300-0218	Two-tone vinyl custom scroll (4 ea side) for body. See photos on file with sales.	$733
8300-0219	Sign Gold Body Stripe - 3/4" Wide - Gold with single Black pin stripe. Located above and below existing stripe. Top to bottom black pin stripe, sign gold, existing stripe, sign gold, black pin stripe.	$1,124
8300-0220	Paint Break Sign Gold Chassis Stripe - 1" Wide - Black pin stripe, Sign Gold, Black pin stripe. To be located above existing paint break if so equipped or at the same approximate position (when there is not a paint break).	$668
8300-0221	Sign gold scroll (Ea). Scroll detail/definition shall be defined by sales administration and or shop order file. Location: [#LOC]	$57
8300-0222	NFPA Scotchlite Stripe - 1", 4" and 1" wide with "Z". Stripe straight on front, sides and rear of cab and body. "Z" location to be specified by customer. 1" above and below 4" with 1" gap between stripes. Color: [#COL]. Location: [#LOC].	$1,613
8300-0223	NFPA Scotchlite Stripe - 6" wide with double pin stripe top and bottom. "Z" Stripe straight on front, sides and rear of cab and body. "Z" location to be specified by customer. Stripe shall be a printed sheet laid out from top to bottom as 1/4" pin stripe, 1/8" gap (wide stripe color), 1/8" pin stripe, 6" wide stripe, 1/8" pin stripe, 1/8" gap (wide stripe color), 1/4" pin stripe. Color: [#COL]. Location: [#LOC].	$1,613
8300-0224	Paint break Scotchlite chassis stripe - 1/2" Wide - [#COL]. To be located above existing paint break.	$532
8300-0225	Paint break Scotchlite body stripe - 1/2" Wide - [#COL]. To be located above existing paint break.	$757
8300-0226	Sign Gold Stripe - 3/4" Wide aerial sign plate - Gold with red pin stripe outline. The striping shall create a border around sign plate lettering.	$1,124
8300-0227	Diamond Grade reflective tape on (2) outriggers. Striping to alternate in an "A" pattern when viewed from the front or rear of the truck. Colors to be: [#COL].	$687
8300-0228	Printed reflective striping on (2) outriggers. Striping to alternate in an "A" pattern when viewed from the front or rear of the truck. Colors to be: [#COL].	$306
8300-0229	Scotchlite stripe 3" located 2" below existing stripe. Color: [#COL].	$840
8300-0230	Paint break painted on chassis stripe - 1/8" Wide - [#COL].To be located above existing paint break if so equipped or at the same approximate position (when there is not a paint break).	$1,132
8300-0232	NFPA Scotchlite Stripe - 2" and 4" wide with interlocking "Z". Stripe straight on front, sides and rear of cab and body. "Z" location to be specified by customer. 2" above 4" with 1" gap between stripes. Color: [#COL]. Location: [#LOC].	$1,613
8300-0233	NFPA Scotchlite Stripe - 1", 4" and 1" wide with triple interlocking "Z". Stripe straight on front, sides and rear of cab and body. "Z" location to be specified by customer. 1" above and below 4" with 1" gap between stripes. Color: [#COL]. Location: [#LOC].	$2,359
8300-0234	NFPA Scotchlite Stripe - 2" wide with "Heartbeat". Stripe straight on front, sides and rear of cab and body. "heartbeat" location to be specified by customer. Color: [#COL]. Location: [#LOC].	$1,133
8300-0239	Individual reflective tape on (2) outriggers. Striping to alternate in an "A" pattern when viewed from the front or rear of the truck. Colors to be: [#COL].	$590
8300-0240	Installation of a customer supplied stripe 16" in width shall be installed. The 16" stripe material shall be supplied by the customer Spectra Red in color and shall be reviewed by the Graphics personnel prior to order entry. The stripe shall align on the cab face as specified by customer and go straight back.	$1,645
8300-0241	Sign Gold stripe - 1/2" gold stripe with a 1/8" black outline on both sides - to be located above and below customer supplied stripe full length cab and body.	$1,424
8300-0245	5/16" Pin stripe above and below existing Scotchlite stripe. Color: [#COL].	$852
8300-0246	Yellow M 983-71 rubrail scotchlite insert.	$462
8300-0247	NFPA Scotchlite Stripe - 8" wide with overlaid striping. Overlaid striping width and spacing shall be as specified in shop order and straight on front, sides and rear of cab and body. Color: [#COL]. Location: [#LOC].	$1,484
8300-0248	Chevron "A" style 6" printed sheet Scotchlite striping on entire rear of body. Includes rear facing extrusions, panels, doors and rear driver and officer compartment face. Colors to be [#COL].	$1,805
8300-0251	Scotchlite stripe 3" located 1" below existing stripe. Color: [#COL].	$840
8300-0252	NFPA Scotchlite hockey stripe. The stripe shall be 4"wide with a 3/4" gap above with a 2" wide stripe. The hockey stripe shall go straight across front and may contour as it transitions from cab to body on each side. Color: [#COL]. Location: [#LOC].	$949
8300-0254	Sign gold scroll (2) at front cab corners below windshield with connecting .75" sign gold chassis stripe between scrolls and down to trim.	$339
8300-0255	Chevron "A" style 6" 3M "Diamond Grade" Scotchlite striping on the rear side of the pull out tool board in L3. Colors to be Red/Fluorescent Yellow Green.	$337
8300-0257	Scotchlite Stripe - approximately 6" wide straight on front of cab below windshield end at radius corners. Stripe to be in line (match) the top of the side stripes and trimmed as required at the front cab horizontal radius just above the bumper. Color: [#COL].	$197

8300-0258	Chevron "A" style 6" Blue 3M Scotchlite and Fluorescent Yellow Green 3M "Diamond Grade" striping on rear of body. Includes rear facing extrusions, panels and doors inboard/outboard of the beavertails (if applicable).	$2,338
8300-0259	Chevron "A" style 3M Diamond Grade striping in rubrail. Colors to be: [#COL]	$655
8300-0262	NFPA Scotchlite Stripe - Triple: 2" wide yellow, 1" wide white, 2" wide yellow with 1" space between each stripe. Straight on front and sides of cab and body. Location: Top of stripe even with top of quad bezel.	$1,143
8300-0264	Paint break Scotchlite chassis stripe - 1" Wide - Red, [#COL], Red. To be located above existing paint break.	$189
8300-0265	NFPA Scotchlite Stripe - 6" wide with "Z". Stripe straight on front, sides and rear of cab and body. "Z" location to be specified by customer. Color: White on cab and body / Ruby Red on body doors. Location: bottom of stripe flush with bottom of cab and straight back.	$1,142
8300-0266	Sign Gold Stripe - 1/2" Wide. To be located above and below scotchlite stripe.	$1,338
8300-0267	NFPA Scotchlite Stripe - 9.5" wide and straight on front, sides and rear of cab and body. Color: [#COL]. Location: [#LOC].	$1,176
8300-0269	NFPA Scotchlite stripe. Hillsborough County hockey stripe with 1" red, 1/4" white and 6" black with (2) 1" lemon yellow stripes centered on top of black stripe with 1/4" gap. See photos on file with sales.	$3,575
8300-0270	Sign Gold Stripe - 1" Wide - Black, Gold, Black. To be located 1" above and below scotchlite stripe.	$1,474
8300-0271	Chevron "A" style 6" 3M "Diamond Grade" striping on interior of front bumper lid. Colors to be [#COL].	$847
8300-0272	NFPA Scotchlite Stripe - 2" and 4" wide with interlocking hockey. Stripe straight on front, sides and rear of cab and body. Hockey location to be specified by customer. 2" above 4" with 1" gap between stripes. Color: [#COL]. Location: [#LOC].	$1,613
8300-0273	Chevron "A" style 6" Reflexite V98 striping on front bumper. Colors to be [#COL].	$749
8300-0274	Chevron "A" style 6" Reflexite V98 striping full width on rear of body. Includes rear facing extrusions, panels and doors. Colors to be [#COL].	$1,987
8300-0275	Chevron "A" style 6" Reflexite V98 striping full width on rear of body. Includes rear facing compartment face, extrusions, panels and doors. Does not include center lower pump panel. Colors to be [#COL].	$1,987
8300-0279	Stripe cab lock bar. Color: White.	$73
8300-0280	Chevron "A" style 6" Reflexite V98 striping on (2) outriggers. Striping to alternate in an "A" pattern when viewed from the front or rear of the truck. Colors to be: [#COL].	$646
8300-0283	NFPA Scotchlite hockey stripe special; includes 7/8" black, 2-7/8" gold and 5-7/8" gold stripes. To be straight across front and may contour as it transitions from Cab to Body on each side. Color: black/gold. Location: center of stripe centered with headlight bezel and straight back. See photo on file with sales.	$1,671
8300-0284	NFPA Scotchlite Stripe - 6" wide with "triple hockey stripe". Stripe straight on front, sides and rear of cab and body. "Hockey Stripe" location to be on compartment L1/R1. Color: White. Location: bottom of stripe flush with top of bumper and straight back.	$1,142
8300-0286	Chevron "A" style 6" Reflexite V98 striping full width on rear of body (does not include the B1 door and/or center aerial ladder tunnel door). Includes rear facing extrusions, panels and doors. Colors to be [#COL].	$1,797
8300-0287	Sign Gold Stripe - 3/4" Wide aerial sign plate - Black, Gold, Black. The striping shall create a border around sign plate lettering.	$1,124
8300-0288	Sign Gold Body Stripe - 3/4" Wide - Black, Gold, Black. To be located on upper body sides terminating with an arrow at each end.	$651
8300-0289	Paint Break Sign Gold Chassis Stripe - 3/4" Wide - Black, Gold, Black. To be located at the same approximate position as a paint break with dip to grille.	$250
8300-0291	Scotchlite stripe 1" located 2" above and below existing stripe. Color: [#COL].	$637
8300-0292	Chevron "A" style 6" Reflexite V98 striping on rear of body. Includes rear facing extrusions, panels and doors inboard of beavertails (if equipped). Does not include rear facing outboard compartment faces. Colors to be [#COL].	$1,792
8400-0000	Vision flags on canopy windows (PR).	$537
8400-0004	Install customer supplied logos on front cab doors.	$195
8400-0005	A pair of customer logos for cab supplied to E-One in a digital format.	$841
8400-0006	A pair of customer logos for body supplied to E-ONE in a digital format.	$1,679
8400-0007	Install customer supplied logos/striping. Location: Logos on front cab doors, officer side medical cabinet roll-up door and 911 logos on L4/R4. Install customer supplied 3/8" striping above and below 6" stripe and chassis stripe at paint break.	$318
8400-0008	Star of life logo 12". Location: [#LOC].	$98
8400-0009	American Flag (EA). Approx size: 7"H x 14"W. Location: [#LOC]	$112
8400-0010	Install customer logo from an existing E-ONE design (EA). Location: [#LOC]	$120
8400-0011	Vision flag on officer canopy window.	$271
8400-0012	Star of life logo 22.5". Location: [#LOC]	$194
8400-0013	Signgold Fleur de Lis 5" logo (PR) with black outline. Location: [#LOC].	$194
8400-0014	Graphics banner approx 12H x 134L (PR). Includes (92) 9" Sign Gold letters with shadow. Locate one each upper body side. Lettering to read "TO PROTECT AND PRESERVE LIFE, ENVIRONMENT AND PROPERTY"	$5,313
8400-0015	Install customer supplied logos on rear cab doors.	$195
8400-0016	A pair of Customer Logos supplied to E-One in a digital format. Location: [#LOC].	$875
8400-0017	A customer logo supplied to E-ONE in a digital format. Location: [#LOC].	$297
8400-0018	Star of life logo 20". Location: (1) each side centered on capony window.	$326

8400-0021	Label "NO SMOKING" with universal symbol 2"x6"; white background with red letters. Location: [#LOC].	$38
8400-0023	Install customer supplied logo. Location: [#LOC].	$68
8400-0024	Install up to 12" SignGold customer logo from an existing E-ONE design (EA). Location: [#LOC].	$180
8400-0025	A customer SignGold logo (up to 12") supplied to E-ONE in a digital format. Location: [#LOC].	$378
8400-0029	Reflective American Flag (PR) - wavy. Approx size: 12"H x 18"W. Location: [#LOC].	$223
8400-0032	Install dealer/customer supplied Leo's gold-Smart Silver #1: lettering, logos and body stripes/scolls.	$2,083
8400-0034	Vision flags (Canadian ribbon style) on canopy windows (PR).	$537
8400-0035	911 Tribute Vision flags on upper windows of rear cab doors (PR).	$537
8400-0036	Star of life logo 20" (PR). Location: (1) each side centered between cab doors.	$326
8400-0037	Vision flags (state of Texas ribbon style) on canopy windows (PR).	$537
8400-0038	Vision flags (Canadian ribbon style) on rear cab door windows and side windows of vista extension (PR).	$537
8400-0039	Star of life logo 12" with black outline. Location: [#LOC].	$98
8400-0040	911 Tribute Vision flags, with the United States flag in the background on upper windows of rear cab doors (PR).	$537
8400-0042	Vision 9/11 flag raising on canopy windows (PR).	$537
8400-0043	Custom graphic on each front cab door. White Scotchlite with red lettering and black outline to read: Line 1 "E-ONE", Line 2 "CUSTOM BUILT FOR", Line 3 "City of Winder". Locate above NFPA chevron striping on each cab door. See photo on file with sales.	$404
8400-0045	Yellow label with black lettering to read "Clear front bumper prior to tilting cab". Locate above cab tilt door.	$52
8400-0049	American Flag (EA). Approx size: 16"H x 27"W. Location: Portable tank at rear and driver side of body.	$333
8400-0050	Vision 9/11 twin tower tribute on canopy windows (PR).	$537
8400-0051	Reflective Canadian Flag (PR) - wavy. Approx size: 12"H x 18"W. Location: [#LOC].	$223
8400-0052	Vision graphic on canopy windows (PR). Customer supplied to E-ONE in a digital format.	$743
8400-0053	Waving American Flag (EA). Approx size: 7"H x 14"W. Location: [#LOC].	$112
9000	**Delivery, Warranty, Service**	
9100-0010	Standard 5 Year Warranty	$23,906
9100-0046	10 Year Non Prorated Paint and Perforation Warranty - For Sikkens Paint.	$5,972
9100-0053	5 year 160 series single rear axle warranty. Replaces standard 2 year warranty.	$632
9100-0054	15 Year/100,000 Mile Structural Warranty - Statement of Warranty.	$5,525
9100-0055	15 Year Stainless Steel Plumbing Warranty - Statement of Warranty.	$2,527
9100-0056	15 Year Limited Paint and Perforation Warranty - For Sikkens Paint.	$12,628
9100-0058	12 Year body non-pro-rated paint and perforation warranty, 10 year cab non-pro-rated paint and perforation warranty - For Sikkens Paint.	$11,415
9100-0059	2nd year extended warranty. For 137911 only.	$9,787
9100-0064	Cummins 10 year 200,000 mile extended warranty.	$1,070
9100-0065	Cummins 10 year 200,000 mile extended warranty.	$1,605
9100-0066	Standard extended 3 year warranty body only.	$3,622
9100-0067	10 Year non prorated cab paint warranty.	$8,055
9100-0068	10 Year non prorated body paint warranty. For pumper, single axle tanker and single axle rescue products with aluminum body and pan doors.	$12,337
9100-0069	10 Year non prorated body paint warranty. For pumper, single axle tanker and single axle rescue products with aluminum body and all roll-up doors. (Painted roll-up doors covered under seperate warranty)	$9,932
9100-0070	10 Year non prorated body paint warranty. For aerials, tandem axle tanker and tandem axle rescue products with aluminum body and pan doors.	$15,188
9100-0071	10 Year non prorated body paint warranty. For aerials, tandem axle tanker and tandem axle rescue products with aluminum body and all roll-up doors. (Painted roll-up doors covered under seperate warranty)	$12,700
9100-0072	10 Year non prorated body paint warranty. For pumper, single axle tanker and single axle rescue products with stainless steel body and pan doors.	$6,385
9100-0074	10 Year non prorated body paint warranty. For aerials, tandem axle tanker and tandem axle rescue products with stainless steel body and pan doors.	$9,578
9100-0078	2nd year standard extended warranty. For quote 56422, SO# 139468, Town of Dracut only.	$7,033
9300-0000	Vehicle familiarization aerial (Domestic).	$5,058
9300-0003	Waterous Compressed Air Foam System training.	$3,670
9300-0007	Vehicle Familiar - Domestic.	$4,982
9300-0009	Manuals, Operator and Service CD-ROM.	$379
9300-0010	Approval Drawings	$1,091
9300-0012	Pump panel approval drawings.	$439
9300-0013	Approval Drawings Revised	$218
9300-0017	Manuals Printed (Set).	$989
9300-0018	Manuals, Operator and Service CD-ROM (additional set).	$56
9300-0024	Export preparation (to be applied after customer inspection if applicable).	$908
9300-0029	Manuals. (3) each printed for the engine, transmission and pump. Complete repair and maintenance manuals.	$2,187
9300-0031	Dash panel layout approval drawings	$570
9300-0032	Manuals printed (3).	$1,412
9300-0033	As built electrical and plumbing drawings.	$3,313
9300-0040	As built electrical drawings.	$2,651

9300-0041	As built plumbing drawings.	$3,313
9300-0303	Approval Drawings - Top View of body and pump module section of the vehicle.	$300
9300-0304	Manuals printed (1).	$930
9300-0305	Advent/Hot Shot Foam System Training.	$4,681
9300-0306	Approval Drawings-Additional views. Top view of body and pump module areas. Detailed top view of the interior cab view layout.	$599
9300-0315	Vehicle familiarization aerial (Domestic) additional per day.	$1,125

Notes:

1) Availability of options are limited by other options selected, and not all options are available in every chassis/apparatus configuration. Selection of an option may require several of the above parts/items to complete the option package.

2) Certain options, alone or in combination with other options, may require heavier axle/suspension packages, longer frames, or reinforced frames at additional cost per the above price list.

3) To configure options, the E-One State Term Schedule authorized dealer will use quote configuration software to select the components necessary to effect the option, feature, or configuration requested and quote the total option price.

Fire Apparatus Quotation for:
STATE OF OHIO TERM SCHEDULE

Quotation Number: 57490 Rev: 29

Unit Description: AERM-TYPH-075L

Quote Description: Aerial Rear Mount, Typhoon, HP75 Ladder

Salescode	Extended Description	Qty
TESTING COMPLIANCE STANDARD		
1001-0015	The E-ONE supplied components of the vehicle shall meet the requirements of NFPA 1901, 2009 edition.	1
BUMPERS		
1160-0000	Bumper 10" stainless steel.	1
1160-0011	4" Front Bumper Extension.	1
FRAME ASSEMBLY		
1250-0003	Frame 10.25 x 3.5 x .375 chassis.	1
1250-0006	Frame liner 9.375 x 3.125 x .375.	1
AXLE OPTIONS		
1025-0005	Meritor FL-941 front axle 18,700 lb.	1
1025-0018	Meritor RS-30-185 single rear axle 31,000 lb. capacity.	1
1025-0028	Koni shock absorbers for front axle - adjustable.	1
SUSPENSIONS		
1070-0012	Reyco rear suspension springs rated equal to the capacity of the axle.	1
WHEEL OPTIONS		
1050-0000	Steel wheels for front axle (2).	1
1050-0002	Steel wheels for rear axle (4).	1
1050-0007	Front axle wheel trim kit. Includes stainless steel lug nut covers (chrome plated plastic if applicable) and center cap with E-ONE logo. Note: Center cap will have an inspection port IPO a logo if equipped with Stemco oil seals.	1
1050-0008	Rear axle (single) wheel trim kit. Includes stainless steel lug nut covers (chrome plated plastic if applicable) and center cap with E-ONE logo. E-ONE custom chassis w/steel wheels will have chrome plated plastic lug covers.	1
TIRE OPTIONS		

1060-0017	Four Michelin 315 rear tires with XDN2 mud and snow tread.	1
1060-0047	Two Michelin 385 tires model XFE for front axle.	1
1060-0117	RWC AirGuard LED tire pressure monitoring valve stem caps (6) for single rear axle applications.	1
BRAKE SYSTEMS		
1100-0000	16-1/2" x 6" S-cam brakes with ArvinMeritor automatic slack adjusters for front axle.	1
1100-0002	ArvinMeritor 16-1/2" x 7" S-cam brakes with cast brake drums for a single rear axle.	1
1100-0005	Brake system air 4X2/4X4.	1
1100-0006	Parking brake release mounted on the driver's side lower dash.	1
AIR SYSTEM OPTIONS		
1110-0000-001	Inlet for air system. Location: driver door jamb.	1
1110-0002	Air dryer Bendix AD-9.	1
1110-0006	Air lines nylon.	1
1110-0041	Air horns Grover recessed in bumper (PR).	1
ENGINES & TRANSMISSIONS		
1200-0017	Push-button transmission shift selector.	1
1200-0020	TransSynd synthetic transmission fluid for EVS3000.	1
1200-0097	Electronic limiting of speed to 68 MPH maximum. Note: Max speed may be set at 65 MPH due to tire rating.	1
1200-0235	Eng/Trans Cummins ISL 400HP/EVS3000 2013 EPA compliant engine.	1
SECONDARY BRAKING		
1125-0002	Jacobs engine compression brake.	1
1125-0023	Transmission to seek second gear when Jacobs engine brake or Telma retarder is engaged. N/A with Trans retarder.	1
COOLING PACKAGE		
1800-0013	Cooling system for use with Cyclone II X, Typhoon X, and Quest chassis. For use with 2010/2013 EPA engines. Includes coolant recovery system.	1
FUEL SYSTEMS		
1350-0003	Fuel system 50 gallon.	1
1350-0011	Fuel pump electric w/re-prime.	1
1350-0012-670	Fuel shut-off valve. Location: one (1) inlet side of OEM fuel filter.	1
1350-0022	Fuel line hose rubber.	1
ALTERNATOR		
1700-0005	Alternator Leece Neville 320 amp. 320 amp SAE/275 amp NFPA.	1

BATTERIES		
1400-0002	Battery four group 31 1000 CCA.	1
CHASSIS OPTIONS		
1680-0005	Thermatic fan clutch.	1
1680-0006	Drivelines 1710.	1
1680-0012	Tow eyes rear frame painted.	1
1680-0042	Tow hooks front painted in the down position.	1
1680-0051	Aerial hydraulic activation system.	1
1680-0250-M58	Diesel Exhaust Fluid (DEF) 5 gallon tank for 2013 EPA engines. Location: left side below rear of cab.	1
CAB MODEL		
1520-0013	Typhoon X medium cab with 58" CA	1
CAB ROOF TYPE		
1615-0010	Cab roof to be "flat" (non-vista).	1
CAB BADGE PACKAGE		
1610-0000	Cab and body to have applicable E-ONE logos.	1
GRILLE		
1620-0004	ABS chrome plated grille.	1
CAB DOOR OPTIONS		
1550-0003	Rear crew cab doors in the medium position.	1
1550-0005	Driver and officer cab door windows. Include forward vent windows.	1
1550-0011	Rear crew cab door windows. Includes manual roll-down actuation. Not available on Typhoon or CII with paddle style door latching.	1
1550-0016	Cab door panels ABS.	1
1550-0025	All cab doors shall have "L" style exterior latches.	1
1550-0027	Front cab door windows to have manual actuation.	1
1550-0038-659	(4) LED cab step area lighting. Locate each light on each cab door in the inboard position. Lights to be switched with door ajar.	1
1550-0044	All cab door kick plates to be made from diamond plate aluminum.	1
1550-0059-000-G6	Reflective Red/Lemon Yellow printed striping positioned in the "A" formation located on the cab door panels.	1
1550-0077	Interior cab door locks - manual. Will have manual actuation from each respective door. Includes barrel style key lock on each exterior cab door.	1
1550-0084	All cab exterior access doors to have 1250 keyed locks.	1
MIRRORS		
1670-0003	Velvac 2010 mirrors. Door mounted west coast style with remote control and heat.	1

MISC EXTERIOR CAB OPTIONS		
1550-0020	Windows cab side fixed driver's side.	1
1550-0033	Windows cab side fixed officer's side.	1
1675-0022	Pair of 18" handrails located just behind driver and officer front door one each side.	1
1675-0023	Pair of 18" handrails located just behind driver and officer rear door (ALS doors if equipped) one each side.	1
1675-0030	Mud flaps, front, black with E-ONE logo.	1
1675-0047	Rear cab wall to be 3/16" aluminum diamond plate.	1
1675-0202	Mounting plate for battery charger receptacle, indicator and air inlet (if applicable). Plate to be removable brushed stainless steel.	1
HVAC		
1515-0017	Air conditioning for the Typhoon X, CII X and Quest with Cummins ISC/ISL engine and radiator mounted condenser.	1
1515-0053	Controls for heating and air conditioning shall be located in the center dash area. (Lower area on Typhoon and CII with severe duty dash)	1
SEATS		
1510-0003	Seats, Inc. brand 911 cab seats.	1
1510-0008	Seat color gray.	1
SEATS		
1510-0035-147	Universal air pack bottle bracket (EA). Location: officer's seat.	1
1510-0035-148	Universal air pack bottle bracket (EA). Location: rear facing driver's side.	1
1510-0035-215	Universal air pack bottle bracket (EA). Location: rear facing officer's side.	1
1510-0038	Driver seat 911 air ride.	1
1510-0042	Officer seat to be 911 fixed SCBA.	1
1510-0050	Rear facing 911 seat with SCBA driver's side.	1
1510-0053	Rear facing 911 seat with SCBA officer's side.	1
1510-0234	Seat cover material Turnout Tuff.	1
1685-0031	Seating capacity tag of four occupants.	1
MISC INTERIOR CAB OPTIONS		
1685-0000	Cab interior gray. Does not include engine cover or seat color.	1
1685-0005	Lexan sun visors, driver and officer's side overhead.	1
1685-0168	ABS Dash package. Includes center and officer side dash, lower kick panels and "A" post covers.	1
1685-0187	Severe duty engine cover, molded polyurethane.	1
CAB ELECTRICAL OPTIONS		

1750-0013-172	Turn signal Whelen 600 LED amber arrow pair located upper headlight bezel.	1
1750-0024-179-04	Auto-Eject receptacle inlet 20 amp located outside driver's door next to handrail with a Yellow cover.	1
1750-0029	Switch horn button two position DOT/air horn.	1
1750-0046-195	Cab Headlights. Position: lower.	1
1750-0072-593	12 VDC (or 24VDC) electrical outlet in the cab wired battery hot. Location: officer side dash.	2
1750-0075	English dominant main cab gauge cluster.	1
1750-0158	Dome Lts Red/White LED. Package includes two lights mounted in the front and two mounted in the rear of the cab. White light wired through door and light assembly switch. Red light through light assembly switch.	1
1750-0188	DPF regeneration override switch.	1
1750-0198-A31	Battery charger to be located behind driver's seat.	1
1750-0343	Battery charger E-ONE LPC 20. 120 volt inlet, 20 amp output.	1
1750-0435	Halogen cab headlights. TyphoonX, CIIX and QST2 only.	1
BODY MODEL		
3080-0064	Body aerial HP75 / HP78 SideStacker Quest / CII / Typhoon with pump. Single axle. Includes extended R1 compt and pocket style drop down step at left rear staircase. The rear access doors to match the rear body finish.	1
BODY COMPT REAR		
3110-0058	Rear of body to have flush un-painted smooth plate body panels to facilitate rear body striping.	1
AERIAL BODY OPTIONS		
3310-0050	Crosslay triple 5.5" wide single stack to hold up to 200' of 2.0" DJ (each) or 150'-200' 2.5" DJ (each). Includes storage pan to rear of crosslays	1
3310-0097	Hose bed depth 26" HP75 / HP78 SideStacker with tall R1. Will hold up to 800' of 5" LDH and up to 300-400' of 2.5 or 3" DJ. Capacity will be reduced with optional diamond plate covers.	1
3310-0128	Pike pole/Ladder storage. Available on HP75/78 SideStacker with tall R1 & HM100/110 SideStacker only. The access door to match the rear body finish.	1
3310-0314	Auxiliary jack pad 24X24 (2) with 20 degree formed handle. Includes mounting brackets.	1
DOORS		
3300-0017-004	Door roll up short (up to 45") with satin finish ROM. Location(s): L2.	1
3300-0017-005	Door roll up short (up to 45") with satin finish ROM. Location(s): L3.	1
3300-0019-003	Door roll up tall (greater than 45") with satin finish ROM. Location(s): L1.	1
3300-0019-006	Door roll up tall (greater than 45") with satin finish ROM. Location(s): L4.	1
3300-0019-015	Door roll up tall (greater than 45") with satin finish ROM. Location(s): R1.	1
3300-0164-016	Door double vertical hinged w/rotary latches - painted . Location(s): R2	1

SHELVES		
3370-0052-004	Adjustable shelf (J-Style) for non-transverse compartments 16" or greater in depth. Location: L2.	1
3370-0052-070	Adjustable shelf (J-Style) for non-transverse compartments 16" or greater in depth. Location: L1 upper.	1
3370-0052-073	Adjustable shelf (J-Style) for non-transverse compartments 16" or greater in depth. Location: R1 lower.	1
3370-0052-079	Adjustable shelf (J-Style) for non-transverse compartments 16" or greater in depth. Location: L4 lower.	1
3370-0054-004	Tracks for adjustable shelf and/or adjustable tray in compartments 16" or greater in depth. Location: L2.	1
3370-0054-070	Tracks for adjustable shelf and/or adjustable tray in compartments 16" or greater in depth. Location: L1 upper.	1
3370-0054-073	Tracks for adjustable shelf and/or adjustable tray in compartments 16" or greater in depth. Location: R1 lower.	1
3370-0054-079	Tracks for adjustable shelf and/or adjustable tray in compartments 16" or greater in depth. Location: L4 lower.	1
COVERS		
3305-0007-000-02	Vinyl Red hose bed cover with attached rear flap(s).	1
3305-0008-000-02	Vinyl Red crosslay cover with attached side flaps.	1
PUMP MODULE		
3130-0076	Pump panel opening is 47" wide.	1
PUMP PANELS		
3134-0012	Officer side upper pump access panel to be horizontal hinged with diamond plate door. Includes (2) push button latches and (2) hold open devices.	1
3134-0016	Stainless steel driver and officer side pump panels.	1
3134-0064	The gauge panel(s) on the driver side of the Side Mount module to be hinged upward. Panel(s) to include (2) mechanical/pneumatic (as applicable to panel size) hold opens and latches.	1
MISC PUMP PANEL OPTIONS		
4460-0003	Pump panel tags color coded per NFPA compliance.	1
WATER TANK		
4010-0198	500 gallon "T" water tank. UPF Poly III blue fill tower.	1
TANK PLUMBING		
4450-0010	2" tank fill Akron manual valve.	1
4450-0022	3" tank to pump Akron manual valve.	1
LADDER STORAGE / RACKS		
3365-0167-C85	Dual ladder tunnel for HP75 / HP78 SideStacker with tall R1 compartment. Ladder	1

	rack to hold: PEL3-35, PEL-28 and PRL-16.	
HANDRAILS / STEPS		
3330-0001	Slide-out platform, integral driver side running board (includes hand rail as applicable).	1
3330-0105-060	Dual lighted LED folding step. Location: officer side front compartment face. Each location requires a minimum of (1) handrail per NFPA.	3
3330-0105-062	Dual lighted LED folding step. Location: driver side front compartment face. Each location requires a minimum of (1) handrail per NFPA.	3
MISC BODY OPTIONS		
3090-0001	Hose bed capacity aerial. Provide standard size hose bed.	1
3090-0002	OAH. Unit has no overall height restrictions.	1
3090-0004	OAL. Unit has no overall length restrictions.	1
3340-0015	Diamond plate single axle wheel well. Includes bolt-on composite wheel well liners and aluminum trim fenderettes.	1
3340-0093	Mud flaps, rear, black with E-ONE logo.	1
3340-0270	The painted aerial body side panels shall be smooth / flush. Applies to SideStacker HB side, panels next to water tank on MM, and upper body sides on RLP.	1
SCBA BOTTLE STORAGE		
3320-0061	SCBA Bottle Storage. (4) Cast Product SCBA bottle storage doors. (2) each side in rear wheel well area.	1
3320-0100	Strap(s), loop style to retain SCBA bottle(s). Locate one per bottle in each exterior storage compartment.	4
PUMPS		
4005-0013	Hale QFLO 750-1250 GPM pump, single stage.	1
4005-0030	Rating 1250 GPM	1
PUMP CERTIFICATION		
4475-0000	Pump certification 750-2250 GPM	1
PUMP OPTIONS		
4015-0008	Zinc anodes for Hale pump (PR), (1) discharge side and (1) intake side.	1
4015-0053-198	Steamers to be Flush + 1". Location: driver's side.	1
4015-0053-199	Steamers to be Flush + 1". Location: officer's side.	1
4015-0073	Manual operated master pump drain. The master drain shall be clearly marked and placed in accessible location rearward below running board on driver side or L1 compartment.	1
4015-0210	Pump cooler with Innovative Control 1/4 turn valve with "T" handle and label.	1
INTAKES		
4440-0005	2.5" Left Intake Akron Manual Valve.	1

INTAKE OPTIONS		
4445-0009	Intake relief valve, Akron.	1
DISCHARGES AND PRECONNECTS		
4415-0012-654	1.5" crosslay with Akron manual valve. Location: crosslay 1 & 2.	2
4415-0014-581	2.5" Left Pump Panel Discharge Akron Manual Valve. Location: left side discharge 1.	1
4415-0014-582	2.5" Left Pump Panel Discharge Akron Manual Valve. Location: left side discharge 2.	1
4415-0051	4" Waterway Discharge with 3" Akron Manual Valve.	1
4415-0054-583	4" Right Pump Panel Discharge with 3" Akron Manual Valve (Waterous pumps noted location to be forward lower port). Location: right side discharge 1.	1
4415-0058-655	2.5" Crosslay Akron Manual Valve. Location: crosslay 3.	1
DISCHARGE OPTIONS		
4417-0176	Innovative Controls 3/4" bleeder/drain valve include lift lever with ergonomic grip.	7
4417-0185	Innovative Controls discharge and intake bezels with integral color code and verbiage for side mount pump panel.	1
PRESSURE GOVERNORS		
4465-0011	Class 1 TPG pressure governor. Includes, water, oil, volt and tachometer.	1
GAUGES		
4435-0083	Innovative Controls 10 LED SL series water tank level gauge. On pump panel.	1
4435-0246	2.5" Innovative Controls stainless steel case pressure gauge (0-400) with color code bezel.	7
4435-0247	4" Innovative Controls stainless steel case master pressure gauges with bezel. Intake 30-0-400, and discharge 0-400.	1
ELECTRICAL SYSTEMS		
5010-0013-Y83	Vehicle data recorder - 2009 NFPA compliant. Includes occupant detection with display. Display location: inboard on driver's side overhead console.	1
5010-0039	V-MUX Electrical system for aerials.	1
5010-0059-339	VFD Text display for V-MUX electrical system. Location: center of dash.	1
LIGHT BARS		
5300-0084-035	Whelen Mini-Freedom LED light bars (PR) model FNMINI 24" with red/clear lenses and MKEZ7 mounts. Location: front cab corners at 20 degree angle.	1
WARNING LIGHT PACKAGES		
5550-0054-537	Whelen 600 series Super LED lower level warning light package. Includes (10) red LED light heads w/chrome flanges. Locate side facing lights: at forward most position, on side of cab down low just ahead of rear door, and on rear fixed outrigger cover.	1

WARNING LIGHTS		
5600-0078-268-06	Whelen Super LED beacon (PR) model L31H with Red domes. Location each side of pump module offset to the rear.	1
5600-0078-479-06	Whelen Super LED beacon (PR) model L31H with Red domes. Location rear upper body on aerial style brackets.	1
5600-0105-170	Hazard (door ajar) light 2" LED. Location: center overhead.	1
SIRENS		
5500-0015	Whelen model 295SLSA1 siren with microphone (replaced 295HFSA1).	1
5500-0024-170	The electronic siren control is to be located on the center overhead.	1
SPEAKERS		
5510-0029-209	Speaker, Federal Signal Dynamax ES100 with "E-ONE" grille through bumper. Location: driver side front bumper.	1
DOT LIGHTING		
5150-0006	Whelen 600 series LED horizontal mount tail lights. Includes LED stop/tail, arrow turn and halogen back-up lights with horizontal Cast 3 housing and weatherproof connectors.	1
5150-0017	License plate light LED with chrome housing located at the rear of the body.	1
5150-0026	Marker light LED body/cab package. E-ONE custom cab with aerial ladder, Mid-Mount platform or Bronto bodies only.	1
LIGHTS - COMPARTMENT, STEP & GROUND		
5380-0030	Ground light package LED - small.	1
5380-0036	Step light package body LED - small.	1
5380-0077	Compartment light package Amdor Luma-Bar LED for medium bodies. Includes one light per compartment (two if transverse).	1
LIGHTS - DECK AND SCENE		
5390-0007	Deck/scene light circuit wiring through chassis reverse. Requires rear deck or scene light.	1
5390-0076	Hose bed light Truck-Lite LED model 81380. Locate at front of hose bed. Switched with work light switch in cab.	1
5390-0102	Crosslay light Truck-Lite LED model 81380. Locate to rear of crosslay (SM) and forward of crosslay (TM as applicable). Switched with work light switch in cab.	1
5390-0152-445	Whelen 600 series gradient Super LED surface mounted scene lights (PR) with weatherproof connectors. Switch in cab (driver and officer side lights switched separately). Locate up high on rear access door.	1
LIGHTS - NON-WARNING		
5400-0003	Engine compartment light (EA).	1
5400-0010	Incandescent pump compartment light (EA).	1
5400-0054	Spotlight Specialty 2150 hand held located on officer's side of cab dash w/12V receptacle.	1

5400-0092	Weldon pump panel LED light package with (3) lights per side pump panel. Pump panels over 45" may require additional lights. Side mount only.	1
CONTROLS / SWITCHES		
5100-0000-199	Foot switch to control air horns located officer's side.	1
5100-0007-198	Foot switch to control electronic siren located driver's side.	1
CAMERAS / INTERCOM		
6570-0008	Intercom aerial 2-way. Atkinson Dynamics (Federal). Speaker to be located to rear of platform on Bronto units.	1
MISC ELECTRICAL		
1750-0082-762	12V power distribution module. Includes (6) battery hot and (6) switched hot circuits. 100 amps max (IATS). Location: behind officer's seat.	1
5110-0017	Back-up alarm 97 dB.	1
LIGHTS - QUARTZ		
5450-0144-063	Fire Research Evolution 12V LED scene light model FCA530-V15-SW-H with external push-up pole. Includes switch in cab accessible to driver. Location: officer side back of cab.	1
5450-0144-064	Fire Research Evolution 12V LED scene light model FCA530-V15-SW-H with external push-up pole. Includes switch in cab accessible to driver. Location: driver side back of cab.	1
AERIAL MODEL		
6100-0005	Ladder HP75 with waterway. Includes left side console with cover, split steps at tip and jack leg flood lights.	1
AERIAL HYDRAULIC SYSTEM OPTIONS		
6150-0003-216	Gauge aerial hydraulic oil level. Electronic display to be located on pump operator's panel.	1
AERIAL CONTROLS		
6850-0026	Direct hydraulic aerial control system.	1
MONITORS		
6300-0002	Monitor Akron electric 1000 GPM for ladder. Includes tip and base controls.	1
AERIAL WARNING LIGHTS		
6550-0001	Outrigger warning lights (PR) LED. Truck-Lite model 91R.	1
AERIAL LIGHTING		
6560-0002-231	Spot light 12V located left side tip.	1
6560-0003-232	Flood light 12V located right side tip.	1
6560-0005	Flood lights Unity at base (PR).	1
WATERWAY OPTIONS		

6350-0005	Rear 4" NST waterway inlet for rear mounted aerials. Includes chrome cap.	1
6350-0010	Flowminder with single readout and totalizer for the aerial waterway to be located at the aerial control station.	1
6350-0067	2.5" Innovative Controls stainless steel case pressure gauge (0-400) with color code bezel. Locate next to waterway inlet.	1
AERIAL LADDER BRACKETS		
6600-0002-248	Roof ladder bracket J style mount. Locate outside base section for a PRL-14 on left side of base section. Available on HP75/78, HP100, and HP95.	1
SIGN PLATES		
6750-0000-000-39	Aerial sign plates 10 x 144 (PR). Available on Booms, HP75 and HP100 only. Does not include lettering. Color: Job Color.	1
AERIAL TESTING		
6900-0000	Aerial flow test - 3rd party.	1
6900-0002	Aerial 2009 NFPA Certification.	1
ELBOWS		
7400-0004	Elbow 30 degree chrome swivel w/2.5"FNST x 2.5"MNST.	2
HAND TOOLS		
7600-0005	Pike Pole Fiberglass 6'.	2
7600-0006	Pike Pole Fiberglass 8'.	2
7600-0008	Pike Pole Fiberglass 12'.	2
GROUND LADDERS		
7800-0010	Alco-Lite PRL-16' roof ladder.	2
7800-0016	Alco-Lite PEL-24' 2-section extension ladder.	1
7800-0023	Alco-Lite PEL3-35' 3-section extension ladder.	1
7800-0032	Alco-Lite FL-10, 10' folding ladder w/safety shoes.	1
MISC LOOSE EQUIPMENT		
7600-0016	Wheel chocks 44" NFPA compliant, pair (PR) of Zico SAC-44. Up to 44" diameter tires. Includes mounting brackets.	4
7900-0014	DOT Required Drive Away Kit - Kit includes three (3) triangular warning reflectors with carrying case. This kit is for the end user and is to remain with the truck.	1
EXTERIOR PAINT		
8100-0071	Undercoating E-ONE.	1
8100-0089	All applicable pump/pre-connect application modules are to have a sanded finish (not painted job color). Includes upper and lower pump modules, crosswalk module and/or speedlay/pre-connect module (as applicable). Rear mounted body/pump module to be painted job color.	1
8100-0116	Rear body surface to have a sanded finish (not painted job color). Includes hinged	1

	doors that do not have discrete sales codes and removable panels.		
8100-0176-000-17	Paint E-ONE chassis cab - Sikkens paint. Color: FLNA3225E-1 Red.	1	
8100-0183-000-17	Paint Body - Large - For Aerials, T/A Tankers/Wetsides, Rear Mounts and Rescues. Sikkens paint. Color: FLNA3225E-1 Red.	1	
8100-0186-000-39	Paint exterior surface of outer steel wheels. Sikkens paint. Color: Job Color.	1	
8100-0356	Paint lift cylinders, extension cylinders and upper turntable steelwork FLNA4006 white (does not apply to TT deck).	1	
INTERIOR PAINT			
8150-0011	The interior of the cab to be painted Zolatone gray.	1	
STRIPING			
8200-0015	White reflective tape on (2) outriggers.	1	
8300-0002-334-12	NFPA Scotchlite Stripe - 4" wide and straight on front/sides of cab and sides/rear of body. Color: White. Location: bottom of stripe flush with top of bumper and straight back.	1	
8300-0042	White rubrail scotchlite insert.	1	
8300-0084-000-72	Chevron "A" style 6" printed sheet Scotchlite striping full width on rear of body. Includes rear facing extrusions, panels and doors. Colors to be Yellow/Red.	1	
GRAPHICS			
8400-0022	Logo E-ONE (PR) on aerial lift cylinder. Logo to be black and white reflective material approx 14" long located midway along outward surface of cylinder.	1	
WARRANTY / STANDARD & EXTENDED			
9100-0000	Standard 1 Year Warranty.	1	
9100-0003	Lifetime Frame Warranty.	1	
9100-0004	10 Year/100,000 Mile Structural Warranty for Alum Cab / Body - Statement of Warranty.	1	
9100-0005	10 Year Stainless Steel Plumbing Warranty - Statement of Warranty.	1	
9100-0007	20 Year Aerial Device Structural Warranty - Integrity Limited Warranty.	1	
9100-0019	10 Year Limited Paint and Perforation Warranty - For Sikkens Paint.	1	
SUPPORT, DELIVERY, INSPECTIONS AND MANUALS			
9300-0000	Vehicle familiarization aerial (Domestic).	1	
9300-0009	Manuals, Operator and Service CD-ROM.	1	
9300-0016	Approval Drawings-Standard.	1	
9300-0316	Fire Apparatus Safety Guide published by FAMA, latest edition.	1	
PRICE	2016 E-ONE HP75 AERIAL - TYPHOON CUSTOM CHASSIS		$614,805

STATE OF OHIO TERM SCHEDULE

4200 SURFACE RD
COLUMBUS, OH 43228

Quote No: 57490

3/13/2015

Quote Rev:29 Drawing Rev:6

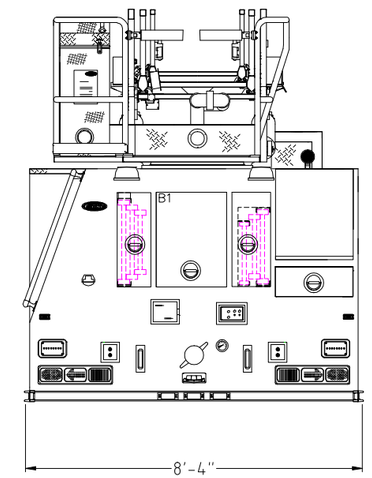

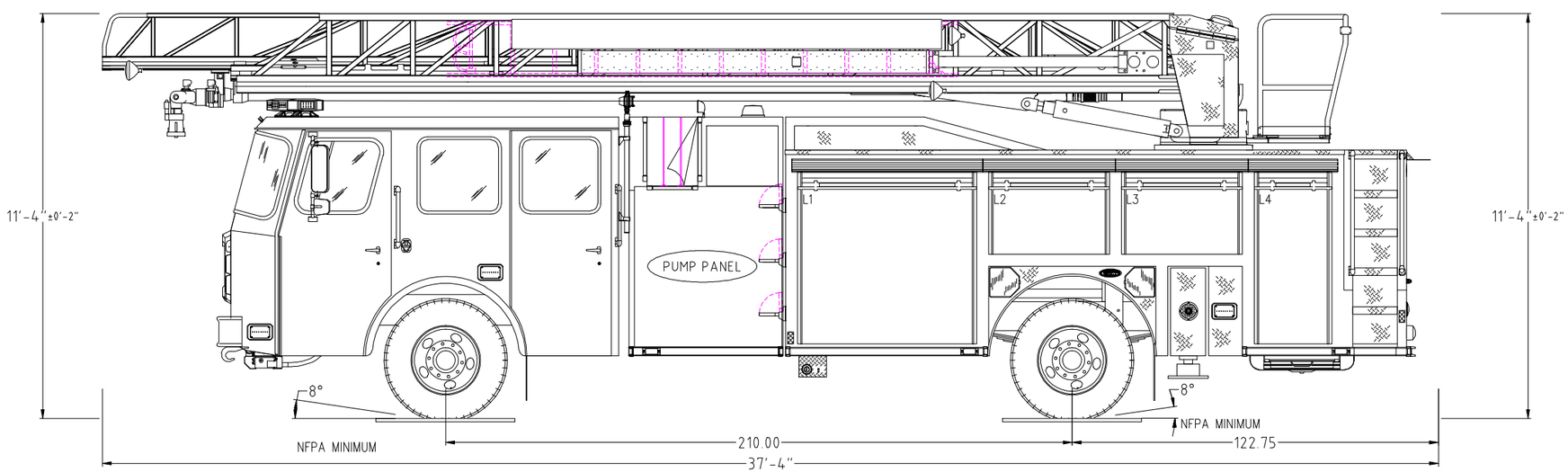

POWERED BY EZDRAW

Notice: This drawing provides a GENERAL REPRESENTATION of the vehicle configuration and should be used for evaluation purposes. The respective dimensions shown,including overall height and length, are estimates and may vary due to manufacturing processes. All other items such as lighting and fixtures, plumbing, compartmentation, and other generally assembled details are shown for REFERENCE ONLY and may not be a direct reflection of the final truck configuration. In ALL situations where this drawing may conflict with the specifications, THE SPECIFICATIONS, AS REFLECTED IN THE APPROVED SHOP ORDER, SHALL PREVAIL. Unless otherwise specified, the proposed apparatus will be manufactured to the latest NFPA recommendations as well as other applicable federally regulated safety regulations. E-One reserves the right to engineer and incorporate design improvements and changes without notice, while adhering to the intent of the specification.

1250 GPM HALE QFLOPUMP
0 TOTAL VOLUME
0 TOTAL FOAM

HOSE LOADS :

	OPENING		INTERIOR DIMENSIONS				
COMPT.	WIDTH	HEIGHT	WIDTH	LOWER HEIGHT	LOWER DEPTH	UPPER HEIGHT	UPPER DEPTH
L1	58	53	60	61	26	53	24
L2	38.5	23	40.5	N/A	N/A	23	24
L3	38.5	23	40.5	N/A	N/A	23	24
L4	24	53	26	61	26	53	24
R1	58	53	60	61	26	53	23
R2	47	26	47	30	26	N/A	N/A

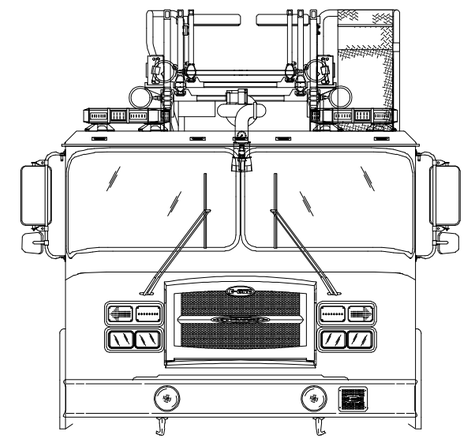

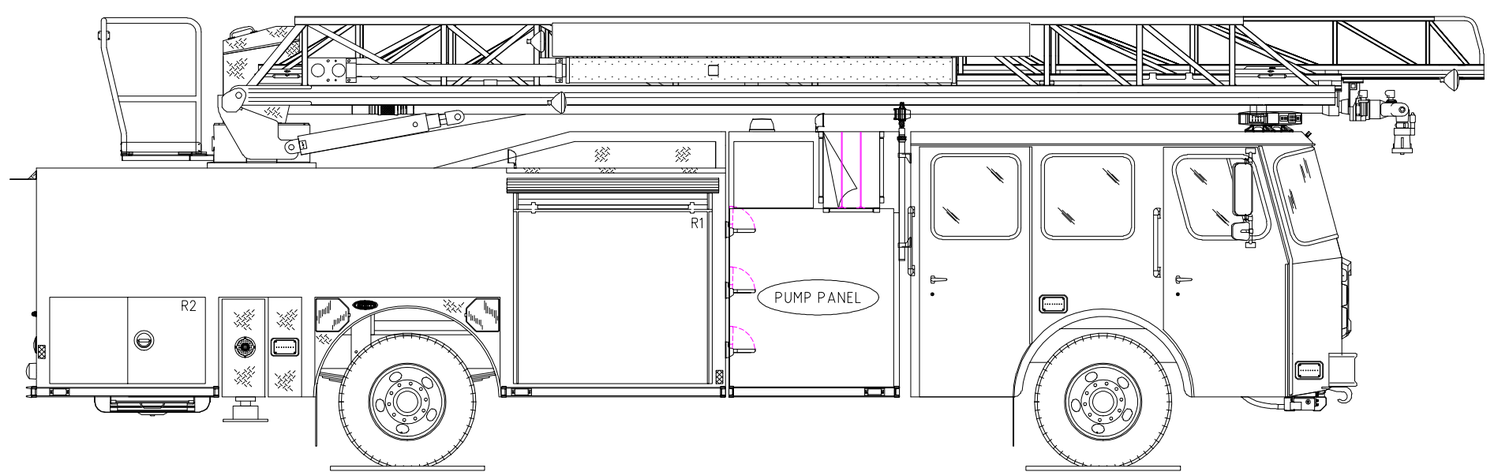

POWERED BY EZDRAW

Fire Apparatus Quotation for:
STATE OF OHIO TERM SCHEDULE

Quotation Number: 57491 Rev: 23

Unit Description: AERM-TYPH-078L

Quote Description: Aerial Rear Mount, Typhoon, HP78 Ladder

Salescode	Extended Description	Qty
TESTING COMPLIANCE STANDARD		
1001-0015	The E-ONE supplied components of the vehicle shall meet the requirements of NFPA 1901, 2009 edition.	1
BUMPERS		
1160-0000	Bumper 10" stainless steel.	1
1160-0010	1/8" Front Bumper Gravel Shield.	1
1160-0013	16" Front Bumper Gravel Shield Extension.	1
FRAME ASSEMBLY		
1250-0025	Frame 12 x 3.5 x .375 chassis.	1
1250-0026	Frame liner 11.125 x 3.125 x .375.	1
AXLE OPTIONS		
1025-0028	Koni shock absorbers for front axle - adjustable.	1
1025-0097	Meritor RS-30-185 single rear axle 33,000 lb. capacity. Requires 16.5" x 8.625" cast shoe brakes and 33K suspension.	1
1025-0123	Meritor FL941 front axle 19,840 lb.	1
SUSPENSIONS		
1070-0017	Reyco rear spring suspension w/aux 33K rating.	1
WHEEL OPTIONS		
1050-0007	Front axle wheel trim kit. Includes stainless steel lug nut covers (chrome plated plastic if applicable) and center cap with E-ONE logo. Note: Center cap will have an inspection port IPO a logo if equipped with Stemco oil seals.	1
1050-0008	Rear axle (single) wheel trim kit. Includes stainless steel lug nut covers (chrome plated plastic if applicable) and center cap with E-ONE logo. E-ONE custom chassis w/steel wheels will have chrome plated plastic lug covers.	1
1050-0044	Accuride aluminum wheels for front axle (2).	1
1050-0045	Accuride aluminum wheels for rear axle (4).	1

TIRE OPTIONS		
1060-0017	Four Michelin 315 rear tires with XDN2 mud and snow tread.	1
1060-0047	Two Michelin 385 tires model XFE for front axle.	1
1060-0117	RWC AirGuard LED tire pressure monitoring valve stem caps (6) for single rear axle applications.	1
BRAKE SYSTEMS		
1100-0001	Meritor EX225H 17" disc brakes for front axle.	1
1100-0005	Brake system air 4X2/4X4.	1
1100-0006	Parking brake release mounted on the driver's side lower dash.	1
1100-0036	16.5" x 8.625" P-Cast S-cam brakes for 27,000 - 33,000 Meritor axle.	1
AIR SYSTEM OPTIONS		
1110-0000-001	Inlet for air system. Location: driver door jamb.	1
1110-0002	Air dryer Bendix AD-9.	1
1110-0006	Air lines nylon.	1
1110-0026	Air horns recessed in bumper (PR).	1
1110-0027	Isolated air tank. Includes pressure protection valve.	1
1110-0043	Auxiliary air tank to be plumbed to the following optional accessories (if equipped): Chassis air horns, brake system air outlet, air reel, light tower and or customer/dealer supplied pneumatic add-on(s).	1
ENGINES & TRANSMISSIONS		
1200-0017	Push-button transmission shift selector.	1
1200-0020	TransSynd synthetic transmission fluid for EVS3000.	1
1200-0096	Electronic speed limiting set at 60 MPH.	1
1200-0236	Eng/Trans Cummins ISL 450HP/EVS3000 2013 EPA compliant engine.	1
SECONDARY BRAKING		
1125-0002	Jacobs engine compression brake.	1
1125-0023	Transmission to seek second gear when Jacobs engine brake or Telma retarder is engaged. N/A with Trans retarder.	1
COOLING PACKAGE		
1800-0013	Cooling system for use with Cyclone II X, Typhoon X, and Quest chassis. For use with 2010/2013 EPA engines. Includes coolant recovery system.	1
FUEL SYSTEMS		
1350-0003	Fuel system 50 gallon.	1
1350-0011	Fuel pump electric w/re-prime.	1
1350-0012-670	Fuel shut-off valve. Location: one (1) inlet side of OEM fuel filter.	1
1350-0022	Fuel line hose rubber.	1

ALTERNATOR		
1700-0005	Alternator Leece Neville 320 amp. 320 amp SAE/275 amp NFPA.	1
BATTERIES		
1400-0002	Battery four group 31 1000 CCA.	1
CHASSIS OPTIONS		
1680-0005	Thermatic fan clutch.	1
1680-0006	Drivelines 1710.	1
1680-0012	Tow eyes rear frame painted.	1
1680-0042	Tow hooks front painted in the down position.	1
1680-0051	Aerial hydraulic activation system.	1
1680-0250-M58	Diesel Exhaust Fluid (DEF) 5 gallon tank for 2013 EPA engines. Location: left side below rear of cab.	1
CAB MODEL		
1520-0012	Typhoon X long cab with 67.5" CA	1
CAB ROOF TYPE		
1615-0010	Cab roof to be "flat" (non-vista).	1
CAB BADGE PACKAGE		
1610-0000	Cab and body to have applicable E-ONE logos.	1
GRILLE		
1620-0004	ABS chrome plated grille.	1
CAB DOOR OPTIONS		
1550-0003	Rear crew cab doors in the medium position.	1
1550-0005	Driver and officer cab door windows. Include forward vent windows.	1
1550-0011	Rear crew cab door windows. Includes manual roll-down actuation. Not available on Typhoon or CII with paddle style door latching.	1
1550-0016	Cab door panels ABS.	1
1550-0025	All cab doors shall have "L" style exterior latches.	1
1550-0027	Front cab door windows to have manual actuation.	1
1550-0038-659	(4) LED cab step area lighting. Locate each light on each cab door in the inboard position. Lights to be switched with door ajar.	1
1550-0044	All cab door kick plates to be made from diamond plate aluminum.	1
1550-0059-000-G6	Reflective Red/Lemon Yellow printed striping positioned in the "A" formation located on the cab door panels.	1
1550-0077	Interior cab door locks - manual. Will have manual actuation from each respective door. Includes barrel style key lock on each exterior cab door.	1
1550-0084	All cab exterior access doors to have 1250 keyed locks.	1

CAB STEP OPTIONS		
1640-0000-158	Step below cab door. Located driver's front door. Steps under front cab doors shall not interfere with approach angle.	1
1640-0000-159	Step below cab door. Located officer's front door. Steps under front cab doors shall not interfere with approach angle.	1
1640-0000-160	Step below cab door. Located driver's rear door. Steps under front cab doors shall not interfere with approach angle.	1
1640-0000-161	Step below cab door. Located officer's rear door. Steps under front cab doors shall not interfere with approach angle.	1
MIRRORS		
1670-0003	Velvac 2010 mirrors. Door mounted west coast style with remote control and heat.	1
MISC EXTERIOR CAB OPTIONS		
1550-0020	Windows cab side fixed driver's side.	1
1550-0033	Windows cab side fixed officer's side.	1
1675-0022	Pair of 18" handrails located just behind driver and officer front door one each side.	1
1675-0023	Pair of 18" handrails located just behind driver and officer rear door (ALS doors if equipped) one each side.	1
1675-0030	Mud flaps, front, black with E-ONE logo.	1
1675-0046	Rear cab wall to be smooth 3/16" aluminum plate. Cab wall to be finish painted to match the cab paint scheme.	1
1675-0202	Mounting plate for battery charger receptacle, indicator and air inlet (if applicable). Plate to be removable brushed stainless steel.	1
HVAC		
1515-0017	Air conditioning for the Typhoon X, CII X and Quest with Cummins ISC/ISL engine and radiator mounted condenser.	1
1515-0053	Controls for heating and air conditioning shall be located in the center dash area. (Lower area on Typhoon and CII with severe duty dash)	1
SEATS		
1510-0003	Seats, Inc. brand 911 cab seats.	1
1510-0008	Seat color gray.	1
1510-0035-147	Universal air pack bottle bracket (EA). Location: officer's seat.	1
1510-0035-148	Universal air pack bottle bracket (EA). Location: rear facing driver's side.	1
1510-0035-151	Universal air pack bottle bracket (EA). Location: inboard driver's side rear wall.	1
1510-0035-152	Universal air pack bottle bracket (EA). Location: inboard officer's side rear wall.	1
1510-0035-215	Universal air pack bottle bracket (EA). Location: rear facing officer's side.	1
1510-0038	Driver seat 911 air ride.	1
1510-0042	Officer seat to be 911 fixed SCBA.	1

1510-0050	Rear facing 911 seat with SCBA driver's side.	1
1510-0053	Rear facing 911 seat with SCBA officer's side.	1
1510-0062	Two man bench centered on rear wall with 911 SCBA backs. Includes angled corners.	1
1510-0234	Seat cover material Turnout Tuff.	1
1685-0033	Seating capacity tag of six occupants.	1
MISC INTERIOR CAB OPTIONS		
1685-0000	Cab interior gray. Does not include engine cover or seat color.	1
1685-0005	Lexan sun visors, driver and officer's side overhead.	1
1685-0168	ABS Dash package. Includes center and officer side dash, lower kick panels and "A" post covers.	1
1685-0187	Severe duty engine cover, molded polyurethane.	1
CAB ELECTRICAL OPTIONS		
1750-0013-172	Turn signal Whelen 600 LED amber arrow pair located upper headlight bezel.	1
1750-0024-179-04	Auto-Eject receptacle inlet 20 amp located outside driver's door next to handrail with a Yellow cover.	1
1750-0029	Switch horn button two position DOT/air horn.	1
1750-0046-195	Cab Headlights. Position: lower.	1
1750-0072-593	12 VDC (or 24VDC) electrical outlet in the cab wired battery hot. Location: officer side dash.	2
1750-0075	English dominant main cab gauge cluster.	1
1750-0158	Dome Lts Red/White LED. Package includes two lights mounted in the front and two mounted in the rear of the cab. White light wired through door and light assembly switch. Red light through light assembly switch.	1
1750-0188	DPF regeneration override switch.	1
1750-0198-A31	Battery charger to be located behind driver's seat.	1
1750-0343	Battery charger E-ONE LPC 20. 120 volt inlet, 20 amp output.	1
1750-0435	Halogen cab headlights. TyphoonX, CIIX and QST2 only.	1
BODY MODEL		
3080-0064	Body aerial HP75 / HP78 SideStacker Quest / CII / Typhoon with pump. Single axle. Includes extended R1 compt and pocket style drop down step at left rear staircase. The rear access doors to match the rear body finish.	1
BODY COMPT REAR		
3110-0058	Rear of body to have flush un-painted smooth plate body panels to facilitate rear body striping.	1
AERIAL BODY OPTIONS		
3310-0050	Crosslay triple 5.5" wide single stack to hold up to 200' of 2.0" DJ (each) or 150'-200' 2.5" DJ (each). Includes storage pan to rear of crosslays	1

3310-0097	Hose bed depth 26" HP75 / HP78 SideStacker with tall R1. Will hold up to 800' of 5" LDH and up to 300-400' of 2.5 or 3" DJ. Capacity will be reduced with optional diamond plate covers.	1
3310-0128	Pike pole/Ladder storage. Available on HP75/78 SideStacker with tall R1 & HM100/110 SideStacker only. The access door to match the rear body finish.	1
3310-0314	Auxiliary jack pad 24X24 (2) with 20 degree formed handle. Includes mounting brackets.	1
DOORS		
3300-0017-004	Door roll up short (up to 45") with satin finish ROM. Location(s): L2.	1
3300-0017-005	Door roll up short (up to 45") with satin finish ROM. Location(s): L3.	1
3300-0019-003	Door roll up tall (greater than 45") with satin finish ROM. Location(s): L1.	1
3300-0019-006	Door roll up tall (greater than 45") with satin finish ROM. Location(s): L4.	1
3300-0019-015	Door roll up tall (greater than 45") with satin finish ROM. Location(s): R1.	1
3300-0164-016	Door double vertical hinged w/rotary latches - painted . Location(s): R2	1
SHELVES		
3370-0052-069	Adjustable shelf (J-Style) for non-transverse compartments 16" or greater in depth. Location: L1 lower.	1
3370-0052-073	Adjustable shelf (J-Style) for non-transverse compartments 16" or greater in depth. Location: R1 lower.	1
3370-0052-079	Adjustable shelf (J-Style) for non-transverse compartments 16" or greater in depth. Location: L4 lower.	1
3370-0054-069	Tracks for adjustable shelf and/or adjustable tray in compartments 16" or greater in depth. Location: L1 lower.	1
3370-0054-073	Tracks for adjustable shelf and/or adjustable tray in compartments 16" or greater in depth. Location: R1 lower.	1
3370-0054-079	Tracks for adjustable shelf and/or adjustable tray in compartments 16" or greater in depth. Location: L4 lower.	1
COVERS		
3305-0007-000-02	Vinyl Red hose bed cover with attached rear flap(s).	1
3305-0008-000-02	Vinyl Red crosslay cover with attached side flaps.	1
PUMP MODULE		
3130-0076	Pump panel opening is 47" wide.	1
PUMP PANELS		
3134-0012	Officer side upper pump access panel to be horizontal hinged with diamond plate door. Includes (2) push button latches and (2) hold open devices.	1
3134-0016	Stainless steel driver and officer side pump panels.	1
3134-0064	The gauge panel(s) on the driver side of the Side Mount module to be hinged upward. Panel(s) to include (2) mechanical/pneumatic (as applicable to panel size) hold opens and latches.	1

MISC PUMP PANEL OPTIONS		
4460-0003	Pump panel tags color coded per NFPA compliance.	1
WATER TANK		
4010-0198	500 gallon "T" water tank. UPF Poly III blue fill tower.	1
TANK PLUMBING		
4450-0010	2" tank fill Akron manual valve.	1
4450-0022	3" tank to pump Akron manual valve.	1
LADDER STORAGE / RACKS		
3365-0167-C85	Dual ladder tunnel for HP75 / HP78 SideStacker with tall R1 compartment. Ladder rack to hold: PEL3-35, PEL-28 and PRL-16.	1
HANDRAILS / STEPS		
3330-0002-050	Slide-out platform, rollerless. Includes chrome grab handle centered on the front face of the platform (includes hand rail as applicable). Located below driver side pump panel.	1
3330-0100-M20	Step below body. Located below rear of officer side pump panel. Each location requires a minimum of (1) handrail / handhold per NFPA.	1
3330-0105-060	Dual lighted LED folding step. Location: officer side front compartment face. Each location requires a minimum of (1) handrail per NFPA.	3
3330-0105-062	Dual lighted LED folding step. Location: driver side front compartment face. Each location requires a minimum of (1) handrail per NFPA.	3
MISC BODY OPTIONS		
3090-0001	Hose bed capacity aerial. Provide standard size hose bed.	1
3090-0002	OAH. Unit has no overall height restrictions.	1
3090-0004	OAL. Unit has no overall length restrictions.	1
3340-0015	Diamond plate single axle wheel well. Includes bolt-on composite wheel well liners and aluminum trim fenderettes.	1
3340-0093	Mud flaps, rear, black with E-ONE logo.	1
3340-0270	The painted aerial body side panels shall be smooth / flush. Applies to SideStacker HB side, panels next to water tank on MM, and upper body sides on RLP.	1
SCBA BOTTLE STORAGE		
3320-0061	SCBA Bottle Storage. (4) Cast Product SCBA bottle storage doors. (2) each side in rear wheel well area.	1
3320-0100	Strap(s), loop style to retain SCBA bottle(s). Locate one per bottle in each exterior storage compartment.	4
PUMPS		
4005-0016	Hale QMAX 1000-2250 GPM single stage pump.	1
4005-0031	Rating 1500 GPM.	1

PUMP CERTIFICATION		
4475-0000	Pump certification 750-2250 GPM	1
PUMP OPTIONS		
4015-0008	Zinc anodes for Hale pump (PR), (1) discharge side and (1) intake side.	1
4015-0022	Mechanical pump seal - Hale.	1
4015-0052-198	Steamers to be Flush. Location: driver's side.	1
4015-0052-199	Steamers to be Flush. Location: officer's side.	1
4015-0073	Manual operated master pump drain. The master drain shall be clearly marked and placed in accessible location rearward below running board on driver side or L1 compartment.	1
4015-0210	Pump cooler with Innovative Control 1/4 turn valve with "T" handle and label.	1
INTAKES		
4440-0005	2.5" Left Intake Akron Manual Valve.	1
INTAKE OPTIONS		
4445-0009	Intake relief valve, Akron.	1
DISCHARGES AND PRECONNECTS		
4415-0012-654	1.5" crosslay with Akron manual valve. Location: crosslay 1 & 2.	2
4415-0014-581	2.5" Left Pump Panel Discharge Akron Manual Valve. Location: left side discharge 1.	1
4415-0014-582	2.5" Left Pump Panel Discharge Akron Manual Valve. Location: left side discharge 2.	1
4415-0016-584	2.5" Right Pump Panel Discharge Akron Manual Valve. Location: right side discharge 2.	1
4415-0051	4" Waterway Discharge with 3" Akron Manual Valve.	1
4415-0054-583	4" Right Pump Panel Discharge with 3" Akron Manual Valve (Waterous pumps noted location to be forward lower port). Location: right side discharge 1.	1
4415-0058-655	2.5" Crosslay Akron Manual Valve. Location: crosslay 3.	1
DISCHARGE OPTIONS		
4417-0177	Innovative Controls 3/4" bleeder/drain valve include 1/4 turn T-handle.	8
4417-0185	Innovative Controls discharge and intake bezels with integral color code and verbiage for side mount pump panel.	1
PRESSURE GOVERNORS		
4465-0011	Class 1 TPG pressure governor. Includes, water, oil, volt and tachometer.	1
GAUGES		
4435-0001	Class 1 Intelli-Tank water tank level gauge. On pump panel.	1
4435-0246	2.5" Innovative Controls stainless steel case pressure gauge (0-400) with color code bezel.	8

4435-0247	4" Innovative Controls stainless steel case master pressure gauges with bezel. Intake 30-0-400, and discharge 0-400.	1
ELECTRICAL SYSTEMS		
5010-0013-Y83	Vehicle data recorder - 2009 NFPA compliant. Includes occupant detection with display. Display location: inboard on driver's side overhead console.	1
5010-0039	V-MUX Electrical system for aerials.	1
5010-0059-339	VFD Text display for V-MUX electrical system. Location: center of dash.	1
LIGHT BARS		
5300-0084-034	Whelen Mini-Freedom LED light bars (PR) model FNMINI 24" with red/clear lenses and MKEZ7 mounts. Location: front cab corners.	1
WARNING LIGHT PACKAGES		
5550-0054-537	Whelen 600 series Super LED lower level warning light package. Includes (10) red LED light heads w/chrome flanges. Locate side facing lights: at forward most position, on side of cab down low just ahead of rear door, and on rear fixed outrigger cover.	1
WARNING LIGHTS		
5600-0078-268-06	Whelen Super LED beacon (PR) model L31H with Red domes. Location each side of pump module offset to the rear.	1
5600-0078-479-06	Whelen Super LED beacon (PR) model L31H with Red domes. Location rear upper body on aerial style brackets.	1
5600-0105-170	Hazard (door ajar) light 2" LED. Location: center overhead.	1
SIRENS		
5500-0015	Whelen model 295SLSA1 siren with microphone (replaced 295HFSA1).	1
5500-0024-170	The electronic siren control is to be located on the center overhead.	1
SPEAKERS		
5510-0029-209	Speaker, Federal Signal Dynamax ES100 with "E-ONE" grille through bumper. Location: driver side front bumper.	1
DOT LIGHTING		
5150-0006	Whelen 600 series LED horizontal mount tail lights. Includes LED stop/tail, arrow turn and halogen back-up lights with horizontal Cast 3 housing and weatherproof connectors.	1
5150-0017	License plate light LED with chrome housing located at the rear of the body.	1
5150-0026	Marker light LED body/cab package. E-ONE custom cab with aerial ladder, Mid-Mount platform or Bronto bodies only.	1
LIGHTS - COMPARTMENT, STEP & GROUND		
5380-0032	Ground light package LED - large.	1
5380-0036	Step light package body LED - small.	1
5380-0077	Compartment light package Amdor Luma-Bar LED for medium bodies. Includes one	1

	light per compartment (two if transverse).	
LIGHTS - DECK AND SCENE		
5390-0007	Deck/scene light circuit wiring through chassis reverse. Requires rear deck or scene light.	1
5390-0076	Hose bed light Truck-Lite LED model 81380. Locate at front of hose bed. Switched with work light switch in cab.	1
5390-0102	Crosslay light Truck-Lite LED model 81380. Locate to rear of crosslay (SM) and forward of crosslay (TM as applicable). Switched with work light switch in cab.	1
5390-0152-445	Whelen 600 series gradient Super LED surface mounted scene lights (PR) with weatherproof connectors. Switch in cab (driver and officer side lights switched separately). Locate up high on rear access door.	1
LIGHTS - NON-WARNING		
5400-0003	Engine compartment light (EA).	1
5400-0010	Incandescent pump compartment light (EA).	1
5400-0054	Spotlight Specialty 2150 hand held located on officer's side of cab dash w/12V receptacle.	1
5400-0092	Weldon pump panel LED light package with (3) lights per side pump panel. Pump panels over 45" may require additional lights. Side mount only.	1
CONTROLS / SWITCHES		
5100-0000-199	Foot switch to control air horns located officer's side.	1
5100-0007-198	Foot switch to control electronic siren located driver's side.	1
CAMERAS / INTERCOM		
6570-0008	Intercom aerial 2-way. Atkinson Dynamics (Federal). Speaker to be located to rear of platform on Bronto units.	1
MISC ELECTRICAL		
1750-0082-762	12V power distribution module. Includes (6) battery hot and (6) switched hot circuits. 100 amps max (IATS). Location: behind officer's seat.	1
5110-0017	Back-up alarm 97 dB.	1
LIGHTS - QUARTZ		
5450-0144-063	Fire Research Evolution 12V LED scene light model FCA530-V15-SW-H with external push-up pole. Includes switch in cab accessible to driver. Location: officer side back of cab.	1
5450-0144-064	Fire Research Evolution 12V LED scene light model FCA530-V15-SW-H with external push-up pole. Includes switch in cab accessible to driver. Location: driver side back of cab.	1
AERIAL MODEL		
6100-0028	Ladder HP78 750 lb tip load with waterway. Includes left side console with cover, split steps at tip and jack leg flood lights.	1

AERIAL HYDRAULIC SYSTEM OPTIONS		
6150-0003-216	Gauge aerial hydraulic oil level. Electronic display to be located on pump operator's panel.	1
AERIAL CONTROLS		
6850-0026	Direct hydraulic aerial control system.	1
MONITORS		
6300-0002	Monitor Akron electric 1000 GPM for ladder. Includes tip and base controls.	1
6300-0017	Monitor painted silver from OEM.	1
AERIAL WARNING LIGHTS		
6550-0001	Outrigger warning lights (PR) LED. Truck-Lite model 91R.	1
AERIAL LIGHTING		
6560-0002-231	Spot light 12V located left side tip.	1
6560-0002-232	Spot light 12V located right side tip.	1
6560-0005	Flood lights Unity at base (PR).	1
WATERWAY OPTIONS		
6350-0005	Rear 4" NST waterway inlet for rear mounted aerials. Includes chrome cap.	1
6350-0010	Flowminder with single readout and totalizer for the aerial waterway to be located at the aerial control station.	1
6350-0067	2.5" Innovative Controls stainless steel case pressure gauge (0-400) with color code bezel. Locate next to waterway inlet.	1
AERIAL LADDER BRACKETS		
6600-0002-250	Roof ladder bracket J style mount. Locate outside base section for a PRL-16 on left side of base section. Available on HP75/78, HP100, and HP95.	1
SIGN PLATES		
6750-0004-000-39	Aerial sign plates 12 x 144 (PR). Available on HP78, HP100 and HP100 platform only. Does not include lettering. Color: Job Color.	1
AERIAL TESTING		
6900-0000	Aerial flow test - 3rd party.	1
6900-0002	Aerial 2009 NFPA Certification.	1
ELBOWS		
7400-0004	Elbow 30 degree chrome swivel w/2.5"FNST x 2.5"MNST.	3
HAND TOOLS		
7600-0005	Pike Pole Fiberglass 6'.	2
7600-0006	Pike Pole Fiberglass 8'.	2
7600-0008	Pike Pole Fiberglass 12'.	2

GROUND LADDERS		
7800-0010	Alco-Lite PRL-16' roof ladder.	2
7800-0021	Alco-Lite PEL-28' extension ladder.	1
7800-0023	Alco-Lite PEL3-35' 3-section extension ladder.	1
7800-0032	Alco-Lite FL-10, 10' folding ladder w/safety shoes.	1
MISC LOOSE EQUIPMENT		
7600-0016	Wheel chocks 44" NFPA compliant, pair (PR) of Zico SAC-44. Up to 44" diameter tires. Includes mounting brackets.	4
7900-0014	DOT Required Drive Away Kit - Kit includes three (3) triangular warning reflectors with carrying case. This kit is for the end user and is to remain with the truck.	1
EXTERIOR PAINT		
8100-0071	Undercoating E-ONE.	1
8100-0089	All applicable pump/pre-connect application modules are to have a sanded finish (not painted job color). Includes upper and lower pump modules, crosswalk module and/or speedlay/pre-connect module (as applicable). Rear mounted body/pump module to be painted job color.	1
8100-0116	Rear body surface to have a sanded finish (not painted job color). Includes hinged doors that do not have discrete sales codes and removable panels.	1
8100-0176-000-17	Paint E-ONE chassis cab - Sikkens paint. Color: FLNA3225E-1 Red.	1
8100-0183-000-17	Paint Body - Large - For Aerials, T/A Tankers/Wetsides, Rear Mounts and Rescues. Sikkens paint. Color: FLNA3225E-1 Red.	1
8100-0356	Paint lift cylinders, extension cylinders and upper turntable steelwork FLNA4006 white (does not apply to TT deck).	1
INTERIOR PAINT		
8150-0011	The interior of the cab to be painted Zolatone gray.	1
STRIPING		
8200-0015	White reflective tape on (2) outriggers.	1
8300-0002-334-12	NFPA Scotchlite Stripe - 4" wide and straight on front/sides of cab and sides/rear of body. Color: White. Location: bottom of stripe flush with top of bumper and straight back.	1
8300-0042	White rubrail scotchlite insert.	1
8300-0084-000-72	Chevron "A" style 6" printed sheet Scotchlite striping full width on rear of body. Includes rear facing extrusions, panels and doors. Colors to be Yellow/Red.	1
GRAPHICS		
8400-0022	Logo E-ONE (PR) on aerial lift cylinder. Logo to be black and white reflective material approx 14" long located midway along outward surface of cylinder.	1
WARRANTY / STANDARD & EXTENDED		
9100-0000	Standard 1 Year Warranty.	1

9100-0003	Lifetime Frame Warranty.	1	
9100-0004	10 Year/100,000 Mile Structural Warranty for Alum Cab / Body - Statement of Warranty.	1	
9100-0005	10 Year Stainless Steel Plumbing Warranty - Statement of Warranty.	1	
9100-0007	20 Year Aerial Device Structural Warranty - Integrity Limited Warranty.	1	
9100-0019	10 Year Limited Paint and Perforation Warranty - For Sikkens Paint.	1	
SUPPORT, DELIVERY, INSPECTIONS AND MANUALS			
9300-0000	Vehicle familiarization aerial (Domestic).	1	
9300-0009	Manuals, Operator and Service CD-ROM.	1	
9300-0016	Approval Drawings-Standard.	1	
9300-0316	Fire Apparatus Safety Guide published by FAMA, latest edition.	1	
PRICE	2016 E-ONE HP78 AERIAL - TYPHOON CUSTOM CHASSIS		$637,321

STATE OF OHIO TERM SCHEDULE

4200 SURFACE RD
COLUMBUS, OH 43228

Quote No: 57491

3/13/2015

Quote Rev:23 Drawing Rev:4

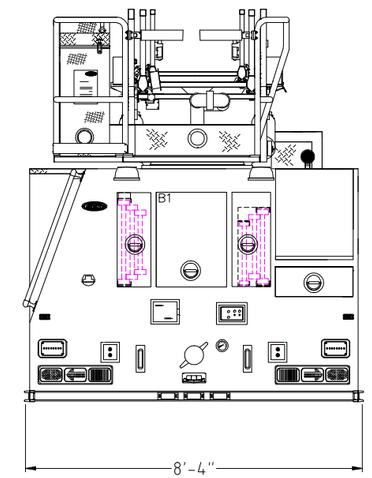

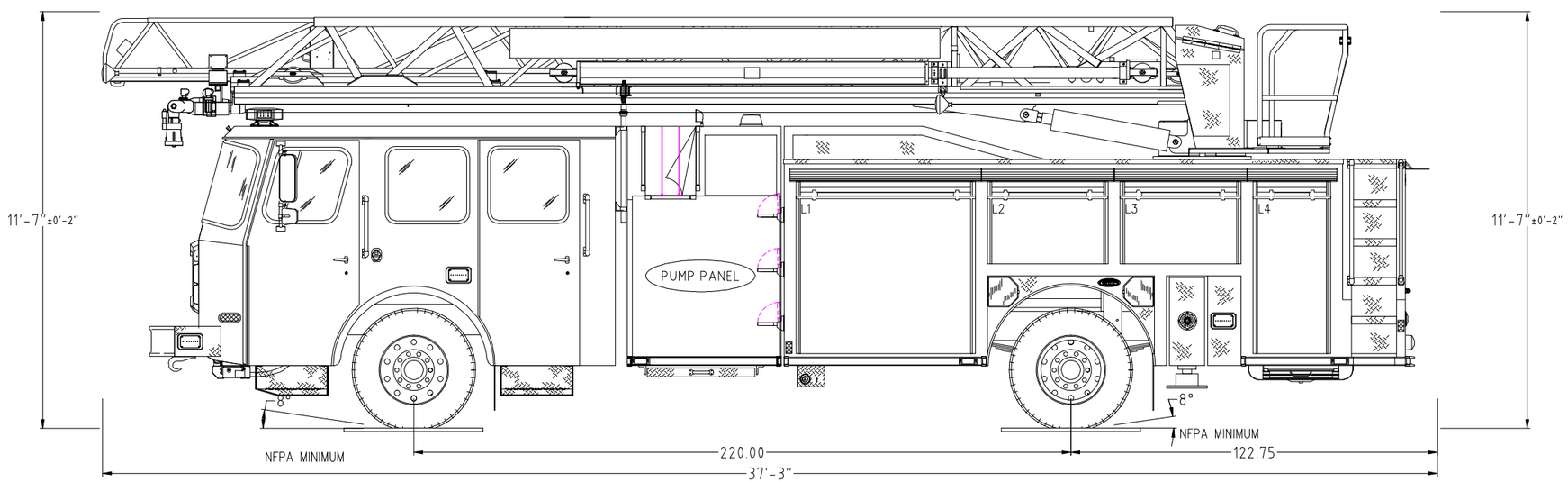

POWERED BY EZDRAW

Notice: This drawing provides a GENERAL REPRESENTATION of the vehicle configuration and should be used for evaluation purposes. The respective dimensions shown,including overall height and length, are estimates and may vary due to manufacturing processes. All other items such as lighting and fixtures, plumbing, compartmentation, and other generally assembled details are shown for REFERENCE ONLY and may not be a direct reflection of the final truck configuration. In ALL situations where this drawing may conflict with the specifications, THE SPECIFICATIONS, AS REFLECTED IN THE APPROVED SHOP ORDER, SHALL PREVAIL. Unless otherwise specified, the proposed apparatus will be manufactured to the latest NFPA recommendations as well as other applicable federally regulated safety regulations. E-One reserves the right to engineer and incorporate design improvements and changes without notice, while adhering to the intent of the specification.

	HOSE LOADS :
1500 GPM HALE QMAXPUMP 0 TOTAL VOLUME 0 TOTAL FOAM	

	OPENING		INTERIOR DIMENSIONS				
COMPT.	WIDTH	HEIGHT	WIDTH	LOWER HEIGHT	LOWER DEPTH	UPPER HEIGHT	UPPER DEPTH
L1	58	53	60	61	26	53	24
L2	38.5	23	40.5	N/A	N/A	23	24
L3	38.5	23	40.5	N/A	N/A	23	24
L4	24	53	26	61	26	53	24
R1	58	53	60	61	26	53	23
R2	47	26	47	30	26	N/A	N/A

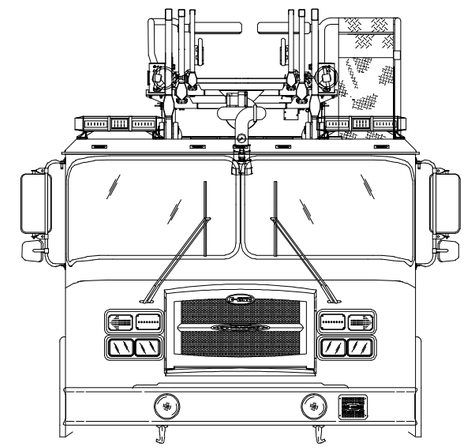

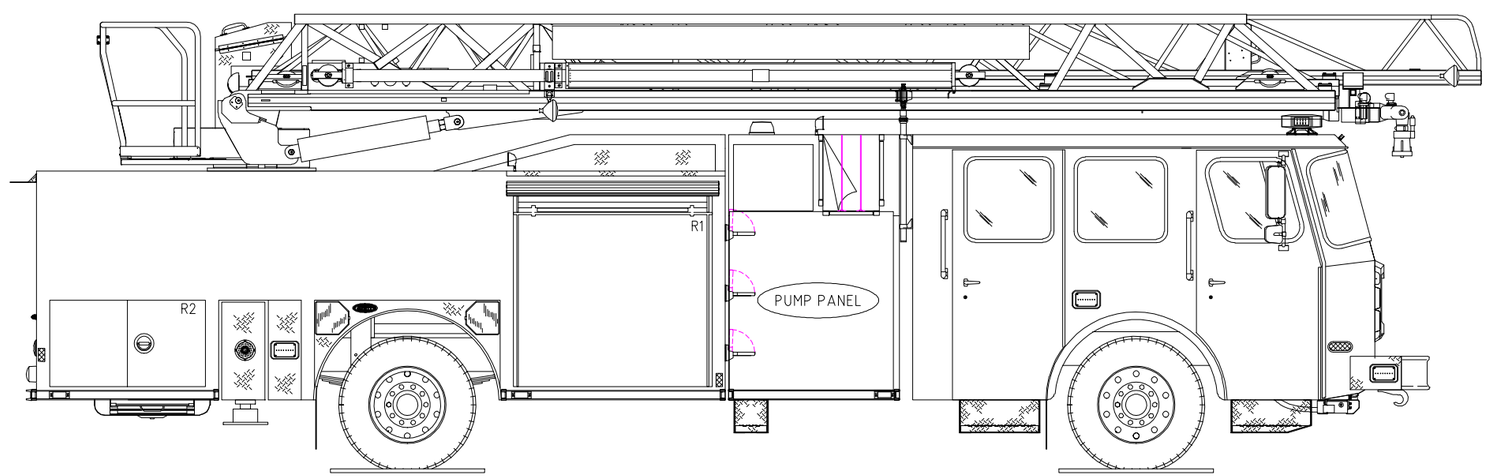

POWERED BY EZDRAW

Fire Apparatus Quotation for:
STATE OF OHIO TERM SCHEDULE

Quotation Number: 71280 Rev: 12

Unit Description: AERM-CYC2-M100

Quote Description: Aerial Rear Mount, Cyclone II, Metro 100

Salescode	Extended Description	Qty
TESTING COMPLIANCE STANDARD		
1001-0015	The E-ONE supplied components of the vehicle shall meet the requirements of NFPA 1901, 2009 edition.	1
BUMPERS		
1160-0000	Bumper 10" stainless steel.	1
1160-0010	1/8" Front Bumper Gravel Shield.	1
1160-0014	20" Front Bumper Gravel Shield Extension.	1
FRAME ASSEMBLY		
1250-0063	Frame - Torque box for single axle RM aerial.	1
AXLE OPTIONS		
1025-0006	Meritor FL941 front axle 20,000 lbs.	1
1025-0028	Koni shock absorbers for front axle - adjustable.	1
1025-0097	Meritor RS-30-185 single rear axle 33,000 lb. capacity. Requires 16.5" x 8.625" cast shoe brakes and 33K suspension.	1
SUSPENSIONS		
1070-0017	Reyco rear spring suspension w/aux 33K rating.	1
WHEEL OPTIONS		
1050-0007	Front axle wheel trim kit. Includes stainless steel lug nut covers (chrome plated plastic if applicable) and center cap with E-ONE logo. Note: Center cap will have an inspection port IPO a logo if equipped with Stemco oil seals.	1
1050-0008	Rear axle (single) wheel trim kit. Includes stainless steel lug nut covers (chrome plated plastic if applicable) and center cap with E-ONE logo. E-ONE custom chassis w/steel wheels will have chrome plated plastic lug covers.	1
1050-0044	Accuride aluminum wheels for front axle (2).	1
1050-0045	Accuride aluminum wheels for rear axle (4).	1

TIRE OPTIONS		
1060-0017	Four Michelin 315 rear tires with XDN2 mud and snow tread.	1
1060-0046	Two Michelin 425 tires model XFE for front axle.	1
1060-0117	RWC AirGuard LED tire pressure monitoring valve stem caps (6) for single rear axle applications.	1
BRAKE SYSTEMS		
1100-0001	Meritor EX225H 17" disc brakes for front axle.	1
1100-0005	Brake system air 4X2/4X4.	1
1100-0006	Parking brake release mounted on the driver's side lower dash.	1
1100-0036	16.5" x 8.625" P-Cast S-cam brakes for 27,000 - 33,000 Meritor axle.	1
AIR SYSTEM OPTIONS		
1110-0000-001	Inlet for air system. Location: driver door jamb.	1
1110-0002	Air dryer Bendix AD-9.	1
1110-0006	Air lines nylon.	1
1110-0026	Air horns recessed in bumper (PR).	1
ENGINES & TRANSMISSIONS		
1200-0017	Push-button transmission shift selector.	1
1200-0020	TransSynd synthetic transmission fluid for EVS3000.	1
1200-0096	Electronic speed limiting set at 60 MPH.	1
1200-0236	Eng/Trans Cummins ISL 450HP/EVS3000 2013 EPA compliant engine.	1
SECONDARY BRAKING		
1125-0002	Jacobs engine compression brake.	1
1125-0023	Transmission to seek second gear when Jacobs engine brake or Telma retarder is engaged. N/A with Trans retarder.	1
COOLING PACKAGE		
1800-0013	Cooling system for use with Cyclone II X, Typhoon X, and Quest chassis. For use with 2010/2013 EPA engines. Includes coolant recovery system.	1
FUEL SYSTEMS		
1350-0004	Fuel system 50 gallon saddle tanks.	1
1350-0011	Fuel pump electric w/re-prime.	1
1350-0012-670	Fuel shut-off valve. Location: one (1) inlet side of OEM fuel filter.	1
1350-0022	Fuel line hose rubber.	1
ALTERNATOR		
1700-0005	Alternator Leece Neville 320 amp. 320 amp SAE/275 amp NFPA.	1
BATTERIES		

1400-0002	Battery four group 31 1000 CCA.	1
CHASSIS OPTIONS		
1680-0005	Thermatic fan clutch.	1
1680-0006	Drivelines 1710.	1
1680-0008	Tow eyes front painted below bumper/cab (PR).	1
1680-0012	Tow eyes rear frame painted.	1
1680-0051	Aerial hydraulic activation system.	1
1680-0250-M58	Diesel Exhaust Fluid (DEF) 5 gallon tank for 2013 EPA engines. Location: left side below rear of cab.	1
CAB MODEL		
1520-0071	Cyclone II X medium cab with 58" CA. For use with a lowered aerial. Requires full length 4.5" deep trough option.	1
CAB ROOF TYPE		
1615-0016	Cab roof to have a 4.5" deep x 44" wide trough for lowered aerial.	1
CAB BADGE PACKAGE		
1610-0000	Cab and body to have applicable E-ONE logos.	1
CAB DOOR OPTIONS		
1550-0003	Rear crew cab doors in the medium position.	1
1550-0005	Driver and officer cab door windows. Include forward vent windows.	1
1550-0011	Rear crew cab door windows. Includes manual roll-down actuation. Not available on Typhoon or CII with paddle style door latching.	1
1550-0025	All cab doors shall have "L" style exterior latches.	1
1550-0027	Front cab door windows to have manual actuation.	1
1550-0038-659	(4) LED cab step area lighting. Locate each light on each cab door in the inboard position. Lights to be switched with door ajar.	1
1550-0059-000-G6	Reflective Red/Lemon Yellow printed striping positioned in the "A" formation located on the cab door panels.	1
1550-0072	Cab door panels aluminum painted Zolatone gray.	1
1550-0077	Interior cab door locks - manual. Will have manual actuation from each respective door. Includes barrel style key lock on each exterior cab door.	1
1550-0083	All cab exterior access doors to have CH751 keyed locks.	1
MIRRORS		
1670-0003	Velvac 2010 mirrors. Door mounted west coast style with remote control and heat.	1
MISC EXTERIOR CAB OPTIONS		
1550-0020	Windows cab side fixed driver's side.	1
1550-0033	Windows cab side fixed officer's side.	1

1675-0022	Pair of 18" handrails located just behind driver and officer front door one each side.	1
1675-0023	Pair of 18" handrails located just behind driver and officer rear door (ALS doors if equipped) one each side.	1
1675-0030	Mud flaps, front, black with E-ONE logo.	1
1675-0047	Rear cab wall to be 3/16" aluminum diamond plate.	1
1675-0201	Large radius cab wheel well. Includes bolt-on ajustable wheel well trim.	1
1675-0202	Mounting plate for battery charger receptacle, indicator and air inlet (if applicable). Plate to be removable brushed stainless steel.	1
HVAC		
1515-0017	Air conditioning for the Typhoon X, CII X and Quest with Cummins ISC/ISL engine and radiator mounted condenser.	1
1515-0052	Controls for heating and air conditioning shall be located in the center dash area upper tier. For use with severe duty dash only.	1
SEATS		
1510-0003	Seats, Inc. brand 911 cab seats.	1
1510-0008	Seat color gray.	1
1510-0035-147	Universal air pack bottle bracket (EA). Location: officer's seat.	1
1510-0035-148	Universal air pack bottle bracket (EA). Location: rear facing driver's side.	1
1510-0035-151	Universal air pack bottle bracket (EA). Location: inboard driver's side rear wall.	1
1510-0035-152	Universal air pack bottle bracket (EA). Location: inboard officer's side rear wall.	1
1510-0035-215	Universal air pack bottle bracket (EA). Location: rear facing officer's side.	1
1510-0038	Driver seat 911 air ride.	1
1510-0042	Officer seat to be 911 fixed SCBA.	1
1510-0050	Rear facing 911 seat with SCBA driver's side.	1
1510-0053	Rear facing 911 seat with SCBA officer's side.	1
1510-0062	Two man bench centered on rear wall with 911 SCBA backs. Includes angled corners.	1
1510-0234	Seat cover material Turnout Tuff.	1
1685-0033	Seating capacity tag of six occupants.	1
MISC INTERIOR CAB OPTIONS		
1685-0000	Cab interior gray. Does not include engine cover or seat color.	1
1685-0006	Padded sun visors, driver and officer's side overhead.	1
1685-0161	Severe duty dash package. Includes smooth plate alum center and officer side dash painted to match cab interior and lower dia plt kick panels.	1
1685-0187	Severe duty engine cover, molded polyurethane.	1
CAB ELECTRICAL OPTIONS		
1750-0013-172	Turn signal Whelen 600 LED amber arrow pair located upper headlight bezel.	1

1750-0024-179-04	Auto-Eject receptacle inlet 20 amp located outside driver's door next to handrail with a Yellow cover.	1
1750-0029	Switch horn button two position DOT/air horn.	1
1750-0046-195	Cab Headlights. Position: lower.	1
1750-0072-593	12 VDC (or 24VDC) electrical outlet in the cab wired battery hot. Location: officer side dash.	2
1750-0075	English dominant main cab gauge cluster.	1
1750-0158	Dome Lts Red/White LED. Package includes two lights mounted in the front and two mounted in the rear of the cab. White light wired through door and light assembly switch. Red light through light assembly switch.	1
1750-0188	DPF regeneration override switch.	1
1750-0198-A31	Battery charger to be located behind driver's seat.	1
1750-0343	Battery charger E-ONE LPC 20. 120 volt inlet, 20 amp output.	1
1750-0435	Halogen cab headlights. TyphoonX, CIIX and QST2 only.	1
BODY MODEL		
3080-0204	Body aerial single axle LTH100 without pump (162 C/A for use with vertical SCR aftertreatment). 96" wide with L and R rescue style high sides and rear side staircases. Rear of body aft of rear jack legs raised 3". 61" high body. (10'-7" OAH with no wway, 10'10" OAH with wway).	1
BODY COMPT REAR		
3110-0058	Rear of body to have flush un-painted smooth plate body panels to facilitate rear body striping.	1
AERIAL BODY OPTIONS		
3310-0032	Recessed tubes for (6) pike poles. Not available on HP75 SideStacker.	1
3310-0144	Rear ladder tunnel doors. Vertically hinged smooth plate aluminum. Doors to hinge on outboard sides and latch in the middle. D-ring to be on right hand "primary" door.	1
3310-0162	Jack leg opening covers diamond plate (4) sets. Includes diamond plate outrigger covers and fixed diamond plate filler panels. HM100/110 requires surface mount warning lights.	1
3310-0303	Auxiliary jack pad 24X24 (4) with 20 degree formed handle. Includes (4) mounting brackets.	1
DOORS		
3300-0011-006	Door single horizontal hinged lift-up box pan configuration painted. Location(s): L4	1
3300-0011-018	Door single horizontal hinged lift-up box pan configuration painted. Location(s): R4	1
3300-0019-003	Door roll up tall (greater than 45") with satin finish ROM. Location(s): L1.	1
3300-0019-004	Door roll up tall (greater than 45") with satin finish ROM. Location(s): L2.	1
3300-0019-005	Door roll up tall (greater than 45") with satin finish ROM. Location(s): L3.	1

3300-0019-007	Door roll up tall (greater than 45") with satin finish ROM. Location(s): L5.	1
3300-0019-008	Door roll up tall (greater than 45") with satin finish ROM. Location(s): L6.	1
3300-0019-015	Door roll up tall (greater than 45") with satin finish ROM. Location(s): R1.	1
3300-0019-016	Door roll up tall (greater than 45") with satin finish ROM. Location(s): R2.	1
3300-0019-017	Door roll up tall (greater than 45") with satin finish ROM. Location(s): R3.	1
3300-0019-019	Door roll up tall (greater than 45") with satin finish ROM. Location(s): R5.	1
3300-0019-020	Door roll up tall (greater than 45") with satin finish ROM. Location(s): R6.	1
SHELVES		
3370-0052-004	Adjustable shelf (J-Style) for non-transverse compartments 16" or greater in depth. Location: L2.	1
3370-0052-005	Adjustable shelf (J-Style) for non-transverse compartments 16" or greater in depth. Location: L3.	1
3370-0052-016	Adjustable shelf (J-Style) for non-transverse compartments 16" or greater in depth. Location: R2.	1
3370-0052-017	Adjustable shelf (J-Style) for non-transverse compartments 16" or greater in depth. Location: R3.	1
3370-0052-074	Adjustable shelf (J-Style) for non-transverse compartments 16" or greater in depth. Location: R1 upper.	1
3370-0052-083	Adjustable shelf (J-Style) for non-transverse compartments 16" or greater in depth. Location: L6 lower.	1
3370-0052-093	Adjustable shelf (J-Style) for non-transverse compartments 16" or greater in depth. Location: R6 lower.	1
3370-0053-069	Adjustable shelf (C-Style) for non-transverse compartments up to 15.99" in depth. Location: L1 lower.	1
3370-0053-081	Adjustable shelf (C-Style) for non-transverse compartments up to 15.99" in depth. Location: L5 lower.	1
3370-0053-091	Adjustable shelf (C-Style) for non-transverse compartments up to 15.99" in depth. Location: R5 lower.	1
3370-0054-004	Tracks for adjustable shelf and/or adjustable tray in compartments 16" or greater in depth. Location: L2.	1
3370-0054-005	Tracks for adjustable shelf and/or adjustable tray in compartments 16" or greater in depth. Location: L3.	1
3370-0054-016	Tracks for adjustable shelf and/or adjustable tray in compartments 16" or greater in depth. Location: R2.	1
3370-0054-017	Tracks for adjustable shelf and/or adjustable tray in compartments 16" or greater in depth. Location: R3.	1
3370-0054-074	Tracks for adjustable shelf and/or adjustable tray in compartments 16" or greater in depth. Location: R1 upper.	1
3370-0054-083	Tracks for adjustable shelf and/or adjustable tray in compartments 16" or greater in depth. Location: L6 lower.	1
3370-0054-093	Tracks for adjustable shelf and/or adjustable tray in compartments 16" or greater in depth. Location: R6 lower.	1

3370-0055-069	Tracks for adjustable shelf in shallow compartments up to 15.99" deep. Location: L1 lower.	1
3370-0055-081	Tracks for adjustable shelf in shallow compartments up to 15.99" deep. Location: L5 lower.	1
3370-0055-091	Tracks for adjustable shelf in shallow compartments up to 15.99" deep. Location: R5 lower.	1
LADDER STORAGE / RACKS		
3365-0037-U91	Center mounted ladder tunnel. Ladder rack to hold: (2) PEL-35, PEL-28, PEL-24, TRL-20, PRL-16 and FL-10.	1
MISC BODY OPTIONS		
3090-0002	OAH. Unit has no overall height restrictions.	1
3090-0004	OAL. Unit has no overall length restrictions.	1
3340-0093	Mud flaps, rear, black with E-ONE logo.	1
3340-0282-X73	Cab tilt switch and manual jack to be located: right side forward jack leg compartment low behind door in access panel (tilt sw behind door).	1
3340-0486	Diamond plate single axle wheel well. Includes bolt-on composite wheel well liners and bolt-on polished alum fenderettes.	1
3340-0689	Insulation to protect compartment from exhaust system heat. Locate behind R1 forward wall.	1
SCBA BOTTLE STORAGE		
3320-0005	SCBA Bottle Storage. (4) Cast Product SCBA bottle storage with gasketed doors. (2) each side in rear wheel well area.	1
3320-0100	Strap(s), loop style to retain SCBA bottle(s). Locate one per bottle in each exterior storage compartment.	4
ELECTRICAL SYSTEMS		
5010-0039	V-MUX Electrical system for aerials.	1
5010-0049	Vehicle data recorder - 2009 NFPA compliant. Includes occupant detection shown in multiplex display. E-ONE chassis only.	1
5010-0055-649	Vista IV display for V-MUX electrical system. Location: driver's side engine cover.	1
LIGHT BARS		
5300-0084-035	Whelen Mini-Freedom LED light bars (PR) model FNMINI 24" with red/clear lenses and MKEZ7 mounts. Location: front cab corners at 20 degree angle.	1
WARNING LIGHT PACKAGES		
5550-0059-535	Whelen Super LED lower level warning light package. Includes (8) red 600 LED light heads and (2) red 500 LED light heads w/chrome flanges. Locate side facing lights: at forward most position, centered in rear wheel well, and side facing at rear of body in rubrail if equipped.	1
WARNING LIGHTS		
5600-0078-479-06	Whelen Super LED beacon (PR) model L31H with Red domes. Location rear upper	1

	body on aerial style brackets.	
5600-0211-170	Hazard (door ajar) light .75" LED red. Location: center overhead.	1
SIRENS		
5500-0015	Whelen model 295SLSA1 siren with microphone (replaced 295HFSA1).	1
5500-0024-Z10	The electronic siren control is to be located on the center of center dash upper tier (recessed).	1
SPEAKERS		
5510-0029-209	Speaker, Federal Signal Dynamax ES100 with "E-ONE" grille through bumper. Location: driver side front bumper.	1
DOT LIGHTING		
5150-0006	Whelen 600 series LED horizontal mount tail lights. Includes LED stop/tail, arrow turn and halogen back-up lights with horizontal Cast 3 housing and weatherproof connectors.	1
5150-0017	License plate light LED with chrome housing located at the rear of the body.	1
5150-0026	Marker light LED body/cab package. E-ONE custom cab with aerial ladder, Mid-Mount platform or Bronto bodies only.	1
5150-0080-461	Weldon auxiliary turn signal model 9186-8580 LED (PR). Location: (1) each side in body wheel well offset forward.	1
LIGHTS - COMPARTMENT, STEP & GROUND		
5380-0032	Ground light package LED - large.	1
5380-0136	Compartment light package Amdor Luma-Bar LED for large bodies. Includes one light per compartment (two if transverse).	1
5380-0232	Step light package Whelen 2" LED - small.	1
LIGHTS - DECK AND SCENE		
5390-0007	Deck/scene light circuit wiring through chassis reverse. Requires rear deck or scene light.	1
5390-0058-444	Deck Lights - Truck-Lite LED model 81380 (PR). Location: (1) each side over rear ladder tunnel.	1
LIGHTS - NON-WARNING		
5400-0003	Engine compartment light (EA).	1
5400-0054	Spotlight Specialty 2150 hand held located on officer's side of cab dash w/12V receptacle.	1
CONTROLS / SWITCHES		
5100-0000-199	Foot switch to control air horns located officer's side.	1
5100-0007-198	Foot switch to control electronic siren located driver's side.	1
5100-0042-276	Ramsey control with 3' cord for cab tilt in addition to standard toggle. Red/Black weatherproof push buttons at end of cord. Location of switch plug-in: next to manual cab tilt pump.	1

CAMERAS / INTERCOM		
6570-0008	Intercom aerial 2-way. Atkinson Dynamics (Federal). Speaker to be located to rear of platform on Bronto units.	1
MISC ELECTRICAL		
5110-0017	Back-up alarm 97 dB.	1
AERIAL MODEL		
6100-0030	Lower aerial turntable pedestal and boom support 6in (HM100/110/LTH100). Top of turntable support to top of torque box to be 36.25in.	1
6100-0042	Ladder LTH100 without waterway. Includes left side console with cover, adjustable height turntable handrails, split steps at tip and jack leg flood lights.	1
AERIAL HYDRAULIC SYSTEM OPTIONS		
6150-0003-218	Gauge aerial hydraulic oil level. Electronic display to be located next to aerial master panel.	1
AERIAL CONTROLS		
6850-0026	Direct hydraulic aerial control system.	1
AERIAL WARNING LIGHTS		
6550-0002	Outrigger warning lights (4) LED. Truck-Lite model 91R.	1
AERIAL LIGHTING		
6560-0002-231	Spot light 12V located left side tip.	1
6560-0003-232	Flood light 12V located right side tip.	1
6560-0005	Flood lights Unity at base (PR).	1
6560-0032	Locate spot, flood and /or quartz lights on ladder fly section as far back from tip as possible.	1
AERIAL LADDER BRACKETS		
6600-0004-248	Lift out style roof ladder bracket. Locate outside base section for a PRL-14 on left side of base section. Available on 95RM, 110, CR100 and HM100.	1
SIGN PLATES		
6750-0001-000-39	Aerial sign plates 16 x 144 (PR). Available on HP100L, HPS105L, HP95 and HP100P only. Does not include lettering. Color: Job Color	1
AERIAL TESTING		
6900-0002	Aerial 2009 NFPA Certification.	1
HAND TOOLS		
7600-0005	Pike Pole Fiberglass 6'.	2
7600-0006	Pike Pole Fiberglass 8'.	2
7600-0008	Pike Pole Fiberglass 12'.	2
GROUND LADDERS		

7800-0007	Alco-Lite PRL-14' roof ladder.	1
7800-0010	Alco-Lite PRL-16' roof ladder.	1
7800-0012	Alco-Lite TRL-20 Roof Ladder	1
7800-0016	Alco-Lite PEL-24' 2-section extension ladder.	1
7800-0021	Alco-Lite PEL-28' extension ladder.	1
7800-0024	Alco-Lite PEL-35' extension ladder.	2
7800-0032	Alco-Lite FL-10, 10' folding ladder w/safety shoes.	1
MISC LOOSE EQUIPMENT		
7600-0016	Wheel chocks 44" NFPA compliant, pair (PR) of Zico SAC-44. Up to 44" diameter tires. Includes mounting brackets.	4
7900-0014	DOT Required Drive Away Kit - Kit includes three (3) triangular warning reflectors with carrying case. This kit is for the end user and is to remain with the truck.	1
EXTERIOR PAINT		
8100-0071	Undercoating E-ONE.	1
8100-0116	Rear body surface to have a sanded finish (not painted job color). Includes hinged doors that do not have discrete sales codes and removable panels.	1
8100-0176-000-17	Paint E-ONE chassis cab - Sikkens paint. Color: FLNA3225E-1 Red.	1
8100-0183-000-17	Paint Body - Large - For Aerials, T/A Tankers/Wetsides, Rear Mounts and Rescues. Sikkens paint. Color: FLNA3225E-1 Red.	1
8100-0354	Paint lift cylinders, extension cylinders and upper turntable steelwork primary job color (does not apply to TT deck).	1
INTERIOR PAINT		
8150-0011	The interior of the cab to be painted Zolatone gray.	1
STRIPING		
8200-0016	White reflective tape on (4) outriggers.	1
8300-0002-334-12	NFPA Scotchlite Stripe - 4" wide and straight on front/sides of cab and sides/rear of body. Color: White. Location: bottom of stripe flush with top of bumper and straight back.	1
8300-0042	White rubrail scotchlite insert.	1
8300-0123-000-72	Chevron "A" style 6" printed pattern NFPA Scotchlite striping. Provided to driver and officer rear compartment face, smooth plate panels and/or doors outboard and above the center rear compartment opening and the vertical hosebed extrusions (terminate just above the upper hand rail stanchion). The vertical and horizontal extrusions inboard of the vertical hose bed extrusions shall remain visible with a sanded finish. Colors to be Yellow/Red.	1
GRAPHICS		
8400-0022	Logo E-ONE (PR) on aerial lift cylinder. Logo to be black and white reflective material approx 14" long located midway along outward surface of cylinder.	1

WARRANTY / STANDARD & EXTENDED			
9100-0000	Standard 1 Year Warranty.	1	
9100-0003	Lifetime Frame Warranty.	1	
9100-0004	10 Year/100,000 Mile Structural Warranty for Alum Cab / Body - Statement of Warranty.	1	
9100-0007	20 Year Aerial Device Structural Warranty - Integrity Limited Warranty.	1	
9100-0019	10 Year Limited Paint and Perforation Warranty - For Sikkens Paint.	1	
SUPPORT, DELIVERY, INSPECTIONS AND MANUALS			
9300-0000	Vehicle familiarization aerial (Domestic).	1	
9300-0009	Manuals, Operator and Service CD-ROM.	1	
9300-0016	Approval Drawings-Standard.	1	
9300-0316	Fire Apparatus Safety Guide published by FAMA, latest edition.	1	
PRICE	2016 E-ONE METRO 100 AERIAL - CYCLONE CUSTOM CHASSIS		$624,094

STATE OF OHIO TERM SCHEDULE

4200 SURFACE RD
COLUMBUS, OH 43228

Quote No: 71280

3/13/2015

Quote Rev:12 Drawing Rev:3

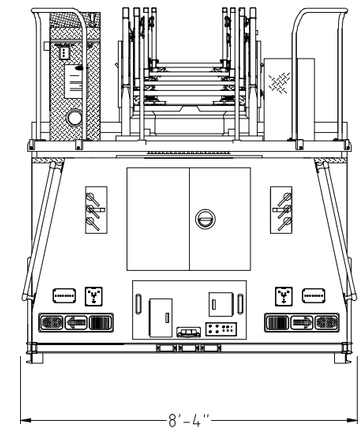

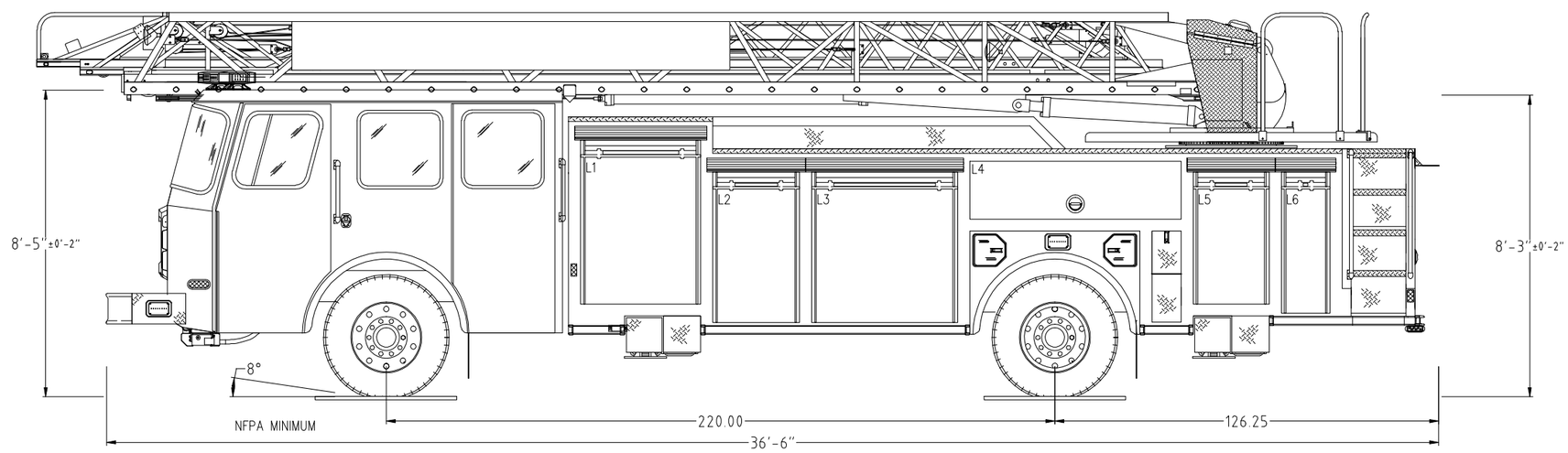

POWERED BY EZDRAW

Notice: This drawing provides a GENERAL REPRESENTATION of the vehicle configuration and should be used for evaluation purposes. The respective dimensions shown,including overall height and length, are estimates and may vary due to manufacturing processes. All other items such as lighting and fixtures, plumbing, compartmentation, and other generally assembled details are shown for REFERENCE ONLY and may not be a direct reflection of the final truck configuration. In ALL situations where this drawing may conflict with the specifications, THE SPECIFICATIONS, AS REFLECTED IN THE APPROVED SHOP ORDER, SHALL PREVAIL. Unless otherwise specified, the proposed apparatus will be manufactured to the latest NFPA recommendations as well as other applicable federally regulated safety regulations. E-One reserves the right to engineer and incorporate design improvements and changes without notice, while adhering to the intent of the specification.

0 GPM PUMP 0 TOTAL VOLUME 0 TOTAL FOAM	HOSE LOADS :

	OPENING		INTERIOR DIMENSIONS				
COMPT.	WIDTH	HEIGHT	WIDTH	LOWER HEIGHT	LOWER DEPTH	UPPER HEIGHT	UPPER DEPTH
L1	37.5	49.5	39.5	57.5	24	49.5	14
L2	26.5	45	28.5	53	24	N/A	N/A
L3	46	45	48	53	24	N/A	N/A
L4	69.5	19	69.5	30	16	N/A	N/A
L5	23	39	25	47	16	39	14
L6	14	42	16	50	16	42	21
R1	19	49.5	21	57.5	24	49.5	14
R2	26.5	45	28.5	53	24	N/A	N/A
R3	46	45	48	53	24	N/A	N/A
R4	69.5	19	69.5	30	16	N/A	N/A
R5	23	39	25	47	16	39	14
R6	14	42	16	50	16	42	21

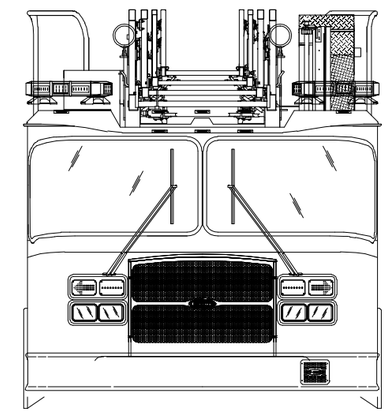

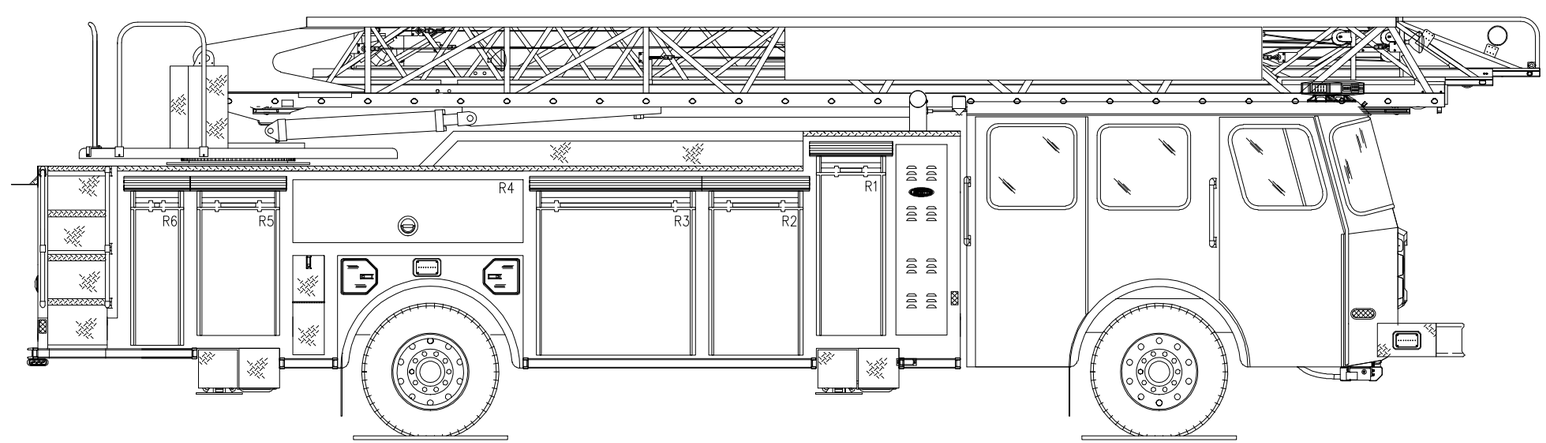

POWERED BY EZDRAW

Fire Apparatus Quotation for:
STATE OF OHIO TERM SCHEDULE

Quotation Number: 57492 Rev: 17

Unit Description: AERM-CYC2-100L

Quote Description: Aerial Rear Mount, Cyclone II, 100 Foot Ladder

Salescode	Extended Description	Qty
TESTING COMPLIANCE STANDARD		
1001-0015	The E-ONE supplied components of the vehicle shall meet the requirements of NFPA 1901, 2009 edition.	1
BUMPERS		
1160-0000	Bumper 10" stainless steel.	1
1160-0010	1/8" Front Bumper Gravel Shield.	1
1160-0013	16" Front Bumper Gravel Shield Extension.	1
FRAME ASSEMBLY		
1250-0005	Frame - Torque box for tandem axle RM aerial.	1
AXLE OPTIONS		
1025-0012	Meritor FL-943 front axle 21,000 lb.	1
1025-0021	Meritor RT-46-160 rear tandem axle 48,000 lb. capacity.	1
1025-0028	Koni shock absorbers for front axle - adjustable.	1
SUSPENSIONS		
1070-0002	Rear suspension springs rated equal to the capacity of the axles.	1
WHEEL OPTIONS		
1050-0007	Front axle wheel trim kit. Includes stainless steel lug nut covers (chrome plated plastic if applicable) and center cap with E-ONE logo. Note: Center cap will have an inspection port IPO a logo if equipped with Stemco oil seals.	1
1050-0009	Rear axle (tandem) wheel trim kit. Includes stainless steel lug nut covers (chrome plated plastic if applicable) and center caps with E-ONE logo. E-ONE custom chassis w/steel wheels will have chrome plated plastic lug covers.	1
1050-0044	Accuride aluminum wheels for front axle (2).	1
WHEEL OPTIONS		
1050-0046	Accuride aluminum wheels for rear axles (8).	1

TIRE OPTIONS		
1060-0021	Eight Michelin 11R rear tires with XDN2 mud and snow tread.	1
1060-0046	Two Michelin 425 tires model XFE for front axle.	1
1060-0119	RWC AirGuard LED tire pressure monitoring valve stem caps (10) for tandem rear axle applications.	1
BRAKE SYSTEMS		
1100-0001	Meritor EX225H 17" disc brakes for front axle.	1
1100-0006	Parking brake release mounted on the driver's side lower dash.	1
1100-0008	Brake system air 6X4.	1
1100-0014	ArvinMeritor 16-1/2" x 7" S-cam brakes with cast brake drums for a tandem rear axle.	1
AIR SYSTEM OPTIONS		
1110-0000-001	Inlet for air system. Location: driver door jamb.	1
1110-0002	Air dryer Bendix AD-9.	1
1110-0006	Air lines nylon.	1
1110-0026	Air horns recessed in bumper (PR).	1
1110-0027	Isolated air tank. Includes pressure protection valve.	1
1110-0043	Auxiliary air tank to be plumbed to the following optional accessories (if equipped): Chassis air horns, brake system air outlet, air reel, light tower and or customer/dealer supplied pneumatic add-on(s).	1
ENGINES & TRANSMISSIONS		
1200-0017	Push-button transmission shift selector.	1
1200-0021	TransSynd synthetic transmission fluid for EVS 4000.	1
1200-0096	Electronic speed limiting set at 60 MPH.	1
1200-0238	Eng/Trans Cummins ISX12 450HP with EVS4000 transmission. 2013 EPA Compliant.	1
SECONDARY BRAKING		
1125-0002	Jacobs engine compression brake.	1
1125-0023	Transmission to seek second gear when Jacobs engine brake or Telma retarder is engaged. N/A with Trans retarder.	1
COOLING PACKAGE		
1800-0013	Cooling system for use with Cyclone II X, Typhoon X, and Quest chassis. For use with 2010/2013 EPA engines. Includes coolant recovery system.	1
FUEL SYSTEMS		
1350-0003	Fuel system 50 gallon.	1
1350-0011	Fuel pump electric w/re-prime.	1
1350-0012-670	Fuel shut-off valve. Location: one (1) inlet side of OEM fuel filter.	1

1350-0022	Fuel line hose rubber.	1
ALTERNATOR		
1700-0005	Alternator Leece Neville 320 amp. 320 amp SAE/275 amp NFPA.	1
BATTERIES		
1400-0002	Battery four group 31 1000 CCA.	1
CHASSIS OPTIONS		
1680-0005	Thermatic fan clutch.	1
1680-0007	Drivelines 1810. Required on 1550 lb/ft torque or greater engines.	1
1680-0008	Tow eyes front painted below bumper/cab (PR).	1
1680-0012	Tow eyes rear frame painted.	1
1680-0051	Aerial hydraulic activation system.	1
1680-0250-M58	Diesel Exhaust Fluid (DEF) 5 gallon tank for 2013 EPA engines. Location: left side below rear of cab.	1
CAB MODEL		
1520-0008	Cyclone II X medium cab with 58" CA	1
CAB ROOF TYPE		
1615-0004	Cab roof to be "flat" with trough for waterway. Required with HM100 (with waterway), HP100 (all), CR100/92 Pltfm (SdStckr and W/O/P) or HP100 Pltfrm (all).	1
CAB BADGE PACKAGE		
1610-0000	Cab and body to have applicable E-ONE logos.	1
CAB DOOR OPTIONS		
1550-0003	Rear crew cab doors in the medium position.	1
1550-0005	Driver and officer cab door windows. Include forward vent windows.	1
CAB DOOR OPTIONS		
1550-0011	Rear crew cab door windows. Includes manual roll-down actuation. Not available on Typhoon or CII with paddle style door latching.	1
1550-0025	All cab doors shall have "L" style exterior latches.	1
1550-0027	Front cab door windows to have manual actuation.	1
1550-0037-659	(4) Incandescent cab step area lighting. Locate each light in on each cab door in the inboard position. Lights to be switched with door ajar.	1
1550-0059-000-G6	Reflective Red/Lemon Yellow printed striping positioned in the "A" formation located on the cab door panels.	1
1550-0072	Cab door panels aluminum painted Zolatone gray.	1
1550-0077	Interior cab door locks - manual. Will have manual actuation from each respective door. Includes barrel style key lock on each exterior cab door.	1

1550-0084	All cab exterior access doors to have 1250 keyed locks.	1
MIRRORS		
1670-0003	Velvac 2010 mirrors. Door mounted west coast style with remote control and heat.	1
MISC EXTERIOR CAB OPTIONS		
1550-0020	Windows cab side fixed driver's side.	1
1550-0033	Windows cab side fixed officer's side.	1
1675-0022	Pair of 18" handrails located just behind driver and officer front door one each side.	1
1675-0023	Pair of 18" handrails located just behind driver and officer rear door (ALS doors if equipped) one each side.	1
1675-0030	Mud flaps, front, black with E-ONE logo.	1
1675-0047	Rear cab wall to be 3/16" aluminum diamond plate.	1
1675-0201	Large radius cab wheel well. Includes bolt-on ajustable wheel well trim.	1
1675-0202	Mounting plate for battery charger receptacle, indicator and air inlet (if applicable). Plate to be removable brushed stainless steel.	1
HVAC		
1515-0018	Air conditioning for the Typhoon X, CII X and Quest with roof top mounted condenser.	1
1515-0052	Controls for heating and air conditioning shall be located in the center dash area upper tier. For use with severe duty dash only.	1
SEATS		
SEATS		
1510-0003	Seats, Inc. brand 911 cab seats.	1
1510-0008	Seat color gray.	1
1510-0035-147	Universal air pack bottle bracket (EA). Location: officer's seat.	1
1510-0035-148	Universal air pack bottle bracket (EA). Location: rear facing driver's side.	1
1510-0035-151	Universal air pack bottle bracket (EA). Location: inboard driver's side rear wall.	1
1510-0035-152	Universal air pack bottle bracket (EA). Location: inboard officer's side rear wall.	1
1510-0035-215	Universal air pack bottle bracket (EA). Location: rear facing officer's side.	1
1510-0038	Driver seat 911 air ride.	1
1510-0042	Officer seat to be 911 fixed SCBA.	1
1510-0050	Rear facing 911 seat with SCBA driver's side.	1
1510-0053	Rear facing 911 seat with SCBA officer's side.	1
1510-0062	Two man bench centered on rear wall with 911 SCBA backs. Includes angled corners.	1
1510-0234	Seat cover material Turnout Tuff.	1

1685-0033	Seating capacity tag of six occupants.	1
MISC INTERIOR CAB OPTIONS		
1685-0000	Cab interior gray. Does not include engine cover or seat color.	1
1685-0005	Lexan sun visors, driver and officer's side overhead.	1
1685-0161	Severe duty dash package. Includes smooth plate alum center and officer side dash painted to match cab interior and lower dia plt kick panels.	1
1685-0187	Severe duty engine cover, molded polyurethane.	1
CAB ELECTRICAL OPTIONS		
1750-0013-172	Turn signal Whelen 600 LED amber arrow pair located upper headlight bezel.	1
1750-0024-179-04	Auto-Eject receptacle inlet 20 amp located outside driver's door next to handrail with a Yellow cover.	1
1750-0029	Switch horn button two position DOT/air horn.	1
1750-0046-195	Cab Headlights. Position: lower.	1
1750-0072-593	12 VDC (or 24VDC) electrical outlet in the cab wired battery hot. Location: officer side dash.	2
1750-0075	English dominant main cab gauge cluster.	1
1750-0158	Dome Lts Red/White LED. Package includes two lights mounted in the front and two mounted in the rear of the cab. White light wired through door and light	1
CAB ELECTRICAL OPTIONS		
	assembly switch. Red light through light assembly switch.	
1750-0188	DPF regeneration override switch.	1
1750-0198-A31	Battery charger to be located behind driver's seat.	1
1750-0343	Battery charger E-ONE LPC 20. 120 volt inlet, 20 amp output.	1
1750-0435	Halogen cab headlights. TyphoonX, CIIX and QST2 only.	1
BODY SPEC		
3090-0000	Body Specs - SideStacker aerial with tandem axle. Includes left rear staircase with pocket style drop down step.	1
BODY COMPT REAR		
3110-0058	Rear of body to have flush un-painted smooth plate body panels to facilitate rear body striping.	1
AERIAL BODY OPTIONS		
3310-0001	Compartments driver side tandem axle HP SideStacker. Includes rescue style extended height compartments.	1
3310-0008	Compartments officer side tandem axle HP SideStacker. Includes rescue style extended height compartments ahead of wheel well with extended hosebed.	1
3310-0032	Recessed tubes for (6) pike poles. Not available on HP75 SideStacker.	1
3310-0036	Rollup rear ladder compartment door with satin finish for SideStacker aerial. Includes hinged ladder retention plate.	1

3310-0050	Crosslay triple 5.5" wide single stack to hold up to 200' of 2.0" DJ (each) or 150'-200' 2.5" DJ (each). Includes storage pan to rear of crosslays	1
3310-0162	Jack leg opening covers diamond plate (4) sets. Includes diamond plate outrigger covers and fixed diamond plate filler panels. HM100/110 requires surface mount warning lights.	1
3310-0303	Auxiliary jack pad 24X24 (4) with 20 degree formed handle. Includes (4) mounting brackets.	1
DOORS		
3300-0007-017	Door single vertical hinged painted. Location(s): R3	1
3300-0011-005	Door single horizontal hinged lift-up box pan configuration painted. Location(s): L3	1
3300-0011-006	Door single horizontal hinged lift-up box pan configuration painted. Location(s): L4	1
3300-0019-003	Door roll up tall (greater than 45") with satin finish ROM. Location(s): L1.	1
3300-0019-004	Door roll up tall (greater than 45") with satin finish ROM. Location(s): L2.	1
DOORS		
3300-0019-007	Door roll up tall (greater than 45") with satin finish ROM. Location(s): L5.	1
3300-0019-008	Door roll up tall (greater than 45") with satin finish ROM. Location(s): L6.	1
3300-0019-015	Door roll up tall (greater than 45") with satin finish ROM. Location(s): R1.	1
3300-0019-016	Door roll up tall (greater than 45") with satin finish ROM. Location(s): R2.	1
3300-0164-018	Door double vertical hinged w/rotary latches - painted . Location(s): R4	1
COVERS		
3305-0007-000-02	Vinyl Red hose bed cover with attached rear flap(s).	1
3305-0008-000-02	Vinyl Red crosslay cover with attached side flaps.	1
PUMP PANELS		
3134-0016	Stainless steel driver and officer side pump panels.	1
3134-0064	The gauge panel(s) on the driver side of the Side Mount module to be hinged upward. Panel(s) to include (2) mechanical/pneumatic (as applicable to panel size) hold opens and latches.	1
3134-0100	Officer side upper pump access panel to be horizontally hinged with diamond plate door. Includes (2) push button latches and (1) hold open device.	1
MISC PUMP PANEL OPTIONS		
4460-0003	Pump panel tags color coded per NFPA compliance.	1
WATER TANK		
4010-0198	500 gallon "T" water tank. UPF Poly III blue fill tower.	1
TANK PLUMBING		
4450-0010	2" tank fill Akron manual valve.	1

4450-0022	3" tank to pump Akron manual valve.	1	
LADDER STORAGE / RACKS			
3365-0037-614	Center mounted ladder tunnel. Ladder rack to hold: PEL3-35, PEL-24, PRL-16, PRL-14, AEL-12 and FL-10. Requires roof ladder option on base section of aerial to meet 115' NFPA requirement.	1	
HANDRAILS / STEPS			
3330-0002-050	Slide-out platform, rollerless. Includes chrome grab handle centered on the front face of the platform (includes hand rail as applicable). Located below driver side pump panel.	1	
3330-0105-060	Dual lighted LED folding step. Location: officer side front compartment face. Each	3	
HANDRAILS / STEPS			
	location requires a minimum of (1) handrail per NFPA.		
3330-0105-062	Dual lighted LED folding step. Location: driver side front compartment face. Each location requires a minimum of (1) handrail per NFPA.	3	
MISC BODY OPTIONS			
3090-0002	OAH. Unit has no overall height restrictions.	1	
3090-0004	OAL. Unit has no overall length restrictions.	1	
3090-0006	The hose bed is to have the capacity for the following hose (unless otherwise specified on the approval drawing). Hose load shall be listed from driver to officer.	1	Lay 1 - 1000 ft. of 5.00 LDH
3340-0093	Mud flaps, rear, black with E-ONE logo.	1	
3340-0107	Diamond plate tandem axle wheel well. Includes bolt-on composite wheel well liners and fenderettes.	1	
3340-0270	The painted aerial body side panels shall be smooth / flush. Applies to SideStacker HB side, panels next to water tank on MM, and upper body sides on RLP.	1	
SCBA BOTTLE STORAGE			
3320-0009	SCBA Bottle Storage. (8) Cast Product SCBA bottle storage with gasketed doors. (4) each side in rear wheel well area.	1	
3320-0100	Strap(s), loop style to retain SCBA bottle(s). Locate one per bottle in each exterior storage compartment.	8	
PUMPS			
4005-0016	Hale QMAX 1000-2250 GPM single stage pump.	1	
4005-0031	Rating 1500 GPM.	1	
PUMP CERTIFICATION			
4475-0000	Pump certification 750-2250 GPM	1	
PUMP OPTIONS			
4015-0008	Zinc anodes for Hale pump (PR), (1) discharge side and (1) intake side.	1	

4015-0022	Mechanical pump seal - Hale.	1
4015-0052-198	Steamers to be Flush. Location: driver's side.	1
4015-0052-199	Steamers to be Flush. Location: officer's side.	1
4015-0073	Manual operated master pump drain. The master drain shall be clearly marked and placed in accessible location rearward below running board on driver side or L1 compartment.	1
PUMP OPTIONS		
4015-0210	Pump cooler with Innovative Control 1/4 turn valve with "T" handle and label.	1
INTAKES		
4440-0005	2.5" Left Intake Akron Manual Valve.	1
INTAKE OPTIONS		
4445-0009	Intake relief valve, Akron.	1
DISCHARGES AND PRECONNECTS		
4415-0012-654	1.5" crosslay with Akron manual valve. Location: crosslay 1 & 2.	2
4415-0014-581	2.5" Left Pump Panel Discharge Akron Manual Valve. Location: left side discharge 1.	1
4415-0014-582	2.5" Left Pump Panel Discharge Akron Manual Valve. Location: left side discharge 2.	1
4415-0016-584	2.5" Right Pump Panel Discharge Akron Manual Valve. Location: right side discharge 2.	1
4415-0051	4" Waterway Discharge with 3" Akron Manual Valve.	1
4415-0054-583	4" Right Pump Panel Discharge with 3" Akron Manual Valve (Waterous pumps noted location to be forward lower port). Location: right side discharge 1.	1
4415-0058-655	2.5" Crosslay Akron Manual Valve. Location: crosslay 3.	1
DISCHARGE OPTIONS		
4417-0176	Innovative Controls 3/4" bleeder/drain valve include lift lever with ergonomic grip.	8
4417-0185	Innovative Controls discharge and intake bezels with integral color code and verbiage for side mount pump panel.	1
PRESSURE GOVERNORS		
4465-0011	Class 1 TPG pressure governor. Includes, water, oil, volt and tachometer.	1
GAUGES		
4435-0083	Innovative Controls 10 LED SL series water tank level gauge. On pump panel.	1
4435-0246	2.5" Innovative Controls stainless steel case pressure gauge (0-400) with color code bezel.	8
4435-0247	4" Innovative Controls stainless steel case master pressure gauges with bezel. Intake 30-0-400, and discharge 0-400.	1

ELECTRICAL SYSTEMS		
5010-0013-E91	Vehicle data recorder - 2009 NFPA compliant. Includes occupant detection with display. Display location: Driver side of center dash electrical cover.	1
ELECTRICAL SYSTEMS		
5010-0039	V-MUX Electrical system for aerials.	1
5010-0059-339	VFD Text display for V-MUX electrical system. Location: center of dash.	1
LIGHT BARS		
5300-0084-034	Whelen Mini-Freedom LED light bars (PR) model FNMINI 24" with red/clear lenses and MKEZ7 mounts. Location: front cab corners.	1
WARNING LIGHT PACKAGES		
5550-0059-538	Whelen Super LED lower level warning light package. Includes (8) red 600 LED light heads and (2) red 500 LED light heads w/chrome flanges. Locate side facing lights: at forward most position, in rear wheel well offset to front, and side facing at rear of body in rubrail if equipped.	1
WARNING LIGHTS		
5600-0078-290-06	Whelen Super LED beacon (PR) model L31H with Red domes. Location above L2/R2 compartments offset rearward to supplement upper rear warnings.	1
5600-0078-479-06	Whelen Super LED beacon (PR) model L31H with Red domes. Location rear upper body on aerial style brackets.	1
5600-0105-170	Hazard (door ajar) light 2" LED. Location: center overhead.	1
SIRENS		
5500-0015	Whelen model 295SLSA1 siren with microphone (replaced 295HFSA1).	1
5500-0024-170	The electronic siren control is to be located on the center overhead.	1
SPEAKERS		
5510-0029-209	Speaker, Federal Signal Dynamax ES100 with "E-ONE" grille through bumper. Location: driver side front bumper.	1
DOT LIGHTING		
5150-0006	Whelen 600 series LED horizontal mount tail lights. Includes LED stop/tail, arrow turn and halogen back-up lights with horizontal Cast 3 housing and weatherproof connectors.	1
5150-0017	License plate light LED with chrome housing located at the rear of the body.	1
5150-0026	Marker light LED body/cab package. E-ONE custom cab with aerial ladder, Mid-Mount platform or Bronto bodies only.	1
5150-0080-462	Weldon auxiliary turn signal model 9186-8580 LED (PR). Location: (1) each side in center of rear tandem wheel well.	1
LIGHTS - COMPARTMENT, STEP & GROUND		
5380-0032	Ground light package LED - large.	1
5380-0036	Step light package body LED - small.	1

5380-0136	Compartment light package Amdor Luma-Bar LED for large bodies. Includes one light per compartment (two if transverse).	1
LIGHTS - DECK AND SCENE		
5390-0007	Deck/scene light circuit wiring through chassis reverse. Requires rear deck or scene light.	1
5390-0076	Hose bed light Truck-Lite LED model 81380. Locate at front of hose bed. Switched with work light switch in cab.	1
5390-0102	Crosslay light Truck-Lite LED model 81380. Locate to rear of crosslay (SM) and forward of crosslay (TM as applicable). Switched with work light switch in cab.	1
5390-0152-446	Whelen 600 series gradient Super LED surface mounted scene lights (PR) with weatherproof connectors. Switch in cab (driver and officer side lights switched separately). Locate (1) each side at rear below pike pole compts.	1
LIGHTS - NON-WARNING		
5400-0003	Engine compartment light (EA).	1
5400-0010	Incandescent pump compartment light (EA).	1
5400-0054	Spotlight Specialty 2150 hand held located on officer's side of cab dash w/12V receptacle.	1
5400-0092	Weldon pump panel LED light package with (3) lights per side pump panel. Pump panels over 45" may require additional lights. Side mount only.	1
CONTROLS / SWITCHES		
5100-0000-199	Foot switch to control air horns located officer's side.	1
5100-0007-198	Foot switch to control electronic siren located driver's side.	1
CAMERAS / INTERCOM		
6570-0008	Intercom aerial 2-way. Atkinson Dynamics (Federal). Speaker to be located to rear of platform on Bronto units.	1
MISC ELECTRICAL		
1750-0082-762	12V power distribution module. Includes (6) battery hot and (6) switched hot circuits. 100 amps max (IATS). Location: behind officer's seat.	1
5110-0017	Back-up alarm 97 dB.	1
LIGHTS - QUARTZ		
5450-0144-063	Fire Research Evolution 12V LED scene light model FCA530-V15-SW-H with	1
LIGHTS - QUARTZ		
	external push-up pole. Includes switch in cab accessible to driver. Location: officer side back of cab.	
5450-0144-064	Fire Research Evolution 12V LED scene light model FCA530-V15-SW-H with external push-up pole. Includes switch in cab accessible to driver. Location: driver side back of cab.	1
AERIAL MODEL		
6100-0009	Ladder HP100 SideStacker. Includes pinned waterway, left side console with cover,	1

	turntable mansaver bars, split steps at tip and jack leg flood lights.	
AERIAL HYDRAULIC SYSTEM OPTIONS		
6150-0003-216	Gauge aerial hydraulic oil level. Electronic display to be located on pump operator's panel.	1
AERIAL CONTROLS		
6850-0026	Direct hydraulic aerial control system.	1
MONITORS		
6300-0002	Monitor Akron electric 1000 GPM for ladder. Includes tip and base controls.	1
6300-0017	Monitor painted silver from OEM.	1
AERIAL WARNING LIGHTS		
6550-0002	Outrigger warning lights (4) LED. Truck-Lite model 91R.	1
AERIAL LIGHTING		
6560-0002-231	Spot light 12V located left side tip.	1
6560-0002-232	Spot light 12V located right side tip.	1
6560-0005	Flood lights Unity at base (PR).	1
WATERWAY OPTIONS		
6350-0005	Rear 4" NST waterway inlet for rear mounted aerials. Includes chrome cap.	1
6350-0010	Flowminder with single readout and totalizer for the aerial waterway to be located at the aerial control station.	1
6350-0067	2.5" Innovative Controls stainless steel case pressure gauge (0-400) with color code bezel. Locate next to waterway inlet.	1
SIGN PLATES		
6750-0000-000-39	Aerial sign plates 10 x 144 (PR). Available on Booms, HP75 and HP100 only. Does not include lettering. Color: Job Color.	1
AERIAL TESTING		
6900-0000	Aerial flow test - 3rd party.	1
6900-0002	Aerial 2009 NFPA Certification.	1
ELBOWS		
7400-0004	Elbow 30 degree chrome swivel w/2.5"FNST x 2.5"MNST.	3
HAND TOOLS		
7600-0005	Pike Pole Fiberglass 6'.	2
7600-0006	Pike Pole Fiberglass 8'.	2
7600-0008	Pike Pole Fiberglass 12'.	2
GROUND LADDERS		
7800-0007	Alco-Lite PRL-14' roof ladder.	1

7800-0010	Alco-Lite PRL-16' roof ladder.	1
7800-0013	Alco-Lite AEL-12 Attic Extension Ladder	1
7800-0016	Alco-Lite PEL-24' 2-section extension ladder.	1
7800-0023	Alco-Lite PEL3-35' 3-section extension ladder.	1
7800-0032	Alco-Lite FL-10, 10' folding ladder w/safety shoes.	1
MISC LOOSE EQUIPMENT		
7600-0016	Wheel chocks 44" NFPA compliant, pair (PR) of Zico SAC-44. Up to 44" diameter tires. Includes mounting brackets.	4
7900-0014	DOT Required Drive Away Kit - Kit includes three (3) triangular warning reflectors with carrying case. This kit is for the end user and is to remain with the truck.	1
EXTERIOR PAINT		
8100-0071	Undercoating E-ONE.	1
8100-0084	All applicable pump/pre-connect application modules are to have a job color finish. Includes upper and lower pump modules, crosswalk module and/or speedlay/pre-connect module (as applicable). Rear mounted body/pump module to be painted job color.	1
8100-0116	Rear body surface to have a sanded finish (not painted job color). Includes hinged doors that do not have discrete sales codes and removable panels.	1
8100-0176-000-17	Paint E-ONE chassis cab - Sikkens paint. Color: FLNA3225E-1 Red.	1
8100-0183-000-17	Paint Body - Large - For Aerials, T/A Tankers/Wetsides, Rear Mounts and Rescues. Sikkens paint. Color: FLNA3225E-1 Red.	1
EXTERIOR PAINT		
8100-0356	Paint lift cylinders, extension cylinders and upper turntable steelwork FLNA4006 white (does not apply to TT deck).	1
INTERIOR PAINT		
8150-0011	The interior of the cab to be painted Zolatone gray.	1
STRIPING		
8200-0016	White reflective tape on (4) outriggers.	1
8300-0002-334-12	NFPA Scotchlite Stripe - 4" wide and straight on front/sides of cab and sides/rear of body. Color: White. Location: bottom of stripe flush with top of bumper and straight back.	1
8300-0042	White rubrail scotchlite insert.	1
8300-0123-000-72	Chevron "A" style 6" printed pattern NFPA Scotchlite striping. Provided to driver and officer rear compartment face, smooth plate panels and/or doors outboard and above the center rear compartment opening and the vertical hosebed extrusions (terminate just above the upper hand rail stanchion). The vertical and horizontal extrusions inboard of the vertical hose bed extrusions shall remain visible with a sanded finish. Colors to be Yellow/Red.	1
GRAPHICS		

8400-0022	Logo E-ONE (PR) on aerial lift cylinder. Logo to be black and white reflective material approx 14" long located midway along outward surface of cylinder.	1	
WARRANTY / STANDARD & EXTENDED			
9100-0000	Standard 1 Year Warranty.	1	
9100-0003	Lifetime Frame Warranty.	1	
9100-0004	10 Year/100,000 Mile Structural Warranty for Alum Cab / Body - Statement of Warranty.	1	
9100-0005	10 Year Stainless Steel Plumbing Warranty - Statement of Warranty.	1	
9100-0007	20 Year Aerial Device Structural Warranty - Integrity Limited Warranty.	1	
9100-0019	10 Year Limited Paint and Perforation Warranty - For Sikkens Paint.	1	
SUPPORT, DELIVERY, INSPECTIONS AND MANUALS			
9300-0000	Vehicle familiarization aerial (Domestic).	1	
9300-0009	Manuals, Operator and Service CD-ROM.	1	
9300-0016	Approval Drawings-Standard.	1	
9300-0316	Fire Apparatus Safety Guide published by FAMA, latest edition.	1	
PRICE	2016 E-ONE HP100 AERIAL - CYCLONE CUSTOM CHASSIS		$850,152

STATE OF OHIO TERM SCHEDULE

4200 SURFACE RD
COLUMBUS, OH 43228

Quote No: 57492

3/13/2015

Quote Rev:17 Drawing Rev:4

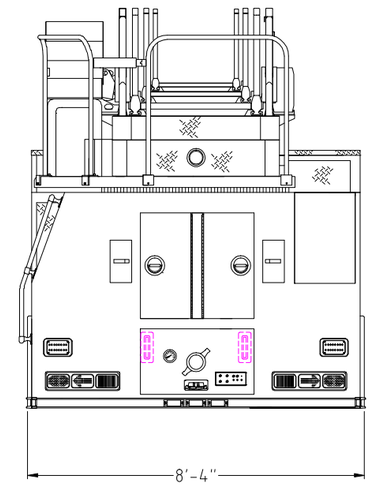

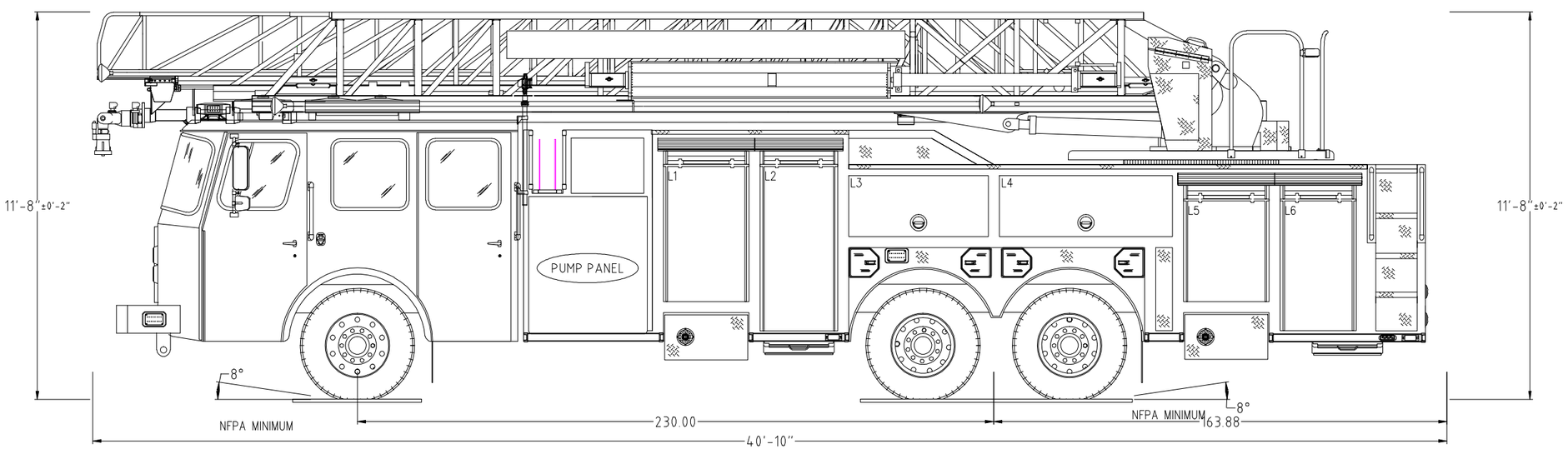

POWERED BY EZDRAW

Notice: This drawing provides a GENERAL REPRESENTATION of the vehicle configuration and should be used for evaluation purposes. The respective dimensions shown,including overall height and length, are estimates and may vary due to manufacturing processes. All other items such as lighting and fixtures, plumbing, compartmentation, and other generally assembled details are shown for REFERENCE ONLY and may not be a direct reflection of the final truck configuration. In ALL situations where this drawing may conflict with the specifications, THE SPECIFICATIONS, AS REFLECTED IN THE APPROVED SHOP ORDER, SHALL PREVAIL. Unless otherwise specified, the proposed apparatus will be manufactured to the latest NFPA recommendations as well as other applicable federally regulated safety regulations. E-One reserves the right to engineer and incorporate design improvements and changes without notice, while adhering to the intent of the specification.

1500 GPM HALE QMAXPUMP 0 TOTAL VOLUME 0 TOTAL FOAM	HOSE LOADS :

	OPENING		INTERIOR DIMENSIONS				
COMPT.	WIDTH	HEIGHT	WIDTH	LOWER HEIGHT	LOWER DEPTH	UPPER HEIGHT	UPPER DEPTH
L1	29	50	31	58	14	50	19
L2	26	60.56	28	68.56	25	60.56	19
L3	50.5	22	50.5	N/A	N/A	22	25
L4	62.5	22	62.5	N/A	N/A	22	20
L5	29	37.5	31	45.5	14	37.5	18
L6	25.5	48	27.5	56	22	48	18
R1	29	50	31	58	14	50	19
R2	26	60.5	28	68.5	25	60.5	19
R3	31	19.5	31	30	14	N/A	N/A
R4	50.5	30	50.5	30	22	N/A	N/A

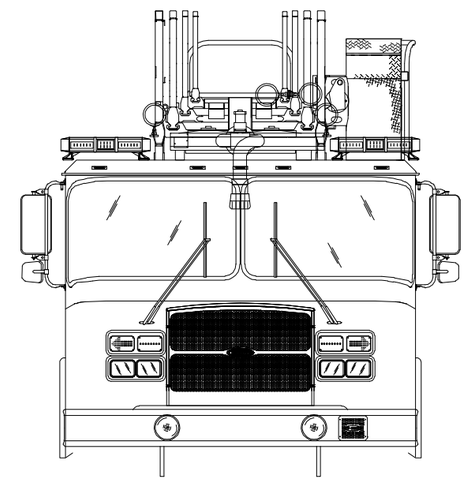

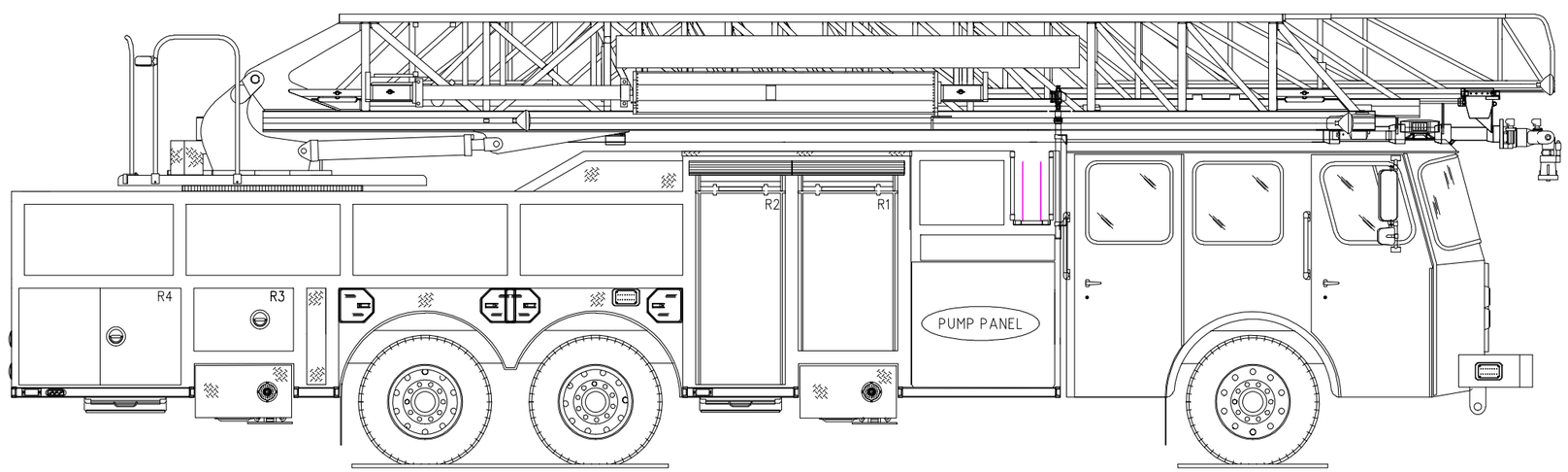

POWERED BY EZDRAW

Fire Apparatus Quotation for:
STATE OF OHIO TERM SCHEDULE

Quotation Number: 57493 Rev: 18

Unit Description: AERM-CYC2-137L

Quote Description: Aerial Rear Mount, Cyclone II, 137 Foot Ladder

Salescode	Extended Description	Qty
TESTING COMPLIANCE STANDARD		
1001-0015	The E-ONE supplied components of the vehicle shall meet the requirements of NFPA 1901, 2009 edition.	1
BUMPERS		
1160-0000	Bumper 10" stainless steel.	1
1160-0010	1/8" Front Bumper Gravel Shield.	1
1160-0013	16" Front Bumper Gravel Shield Extension.	1
FRAME ASSEMBLY		
1250-0005	Frame - Torque box for tandem axle RM aerial.	1
AXLE OPTIONS		
1025-0023	Meritor RT-50-160 rear tandem axle 54,000 lb. capacity.	1
1025-0028	Koni shock absorbers for front axle - adjustable.	1
1025-0060	Meritor FL-943 front axle 22,100 lb.	1
SUSPENSIONS		
1070-0002	Rear suspension springs rated equal to the capacity of the axles.	1
WHEEL OPTIONS		
1050-0007	Front axle wheel trim kit. Includes stainless steel lug nut covers (chrome plated plastic if applicable) and center cap with E-ONE logo. Note: Center cap will have an inspection port IPO a logo if equipped with Stemco oil seals.	1
1050-0009	Rear axle (tandem) wheel trim kit. Includes stainless steel lug nut covers (chrome plated plastic if applicable) and center caps with E-ONE logo. E-ONE custom chassis w/steel wheels will have chrome plated plastic lug covers.	1
1050-0044	Accuride aluminum wheels for front axle (2).	1
1050-0046	Accuride aluminum wheels for rear axles (8).	1
TIRE OPTIONS		

1060-0022	Eight Michelin 12R rear tires with XDN2 mud and snow tread.	1
1060-0046	Two Michelin 425 tires model XFE for front axle.	1
1060-0119	RWC AirGuard LED tire pressure monitoring valve stem caps (10) for tandem rear axle applications.	1
BRAKE SYSTEMS		
1100-0001	Meritor EX225H 17" disc brakes for front axle.	1
1100-0006	Parking brake release mounted on the driver's side lower dash.	1
1100-0008	Brake system air 6X4.	1
1100-0014	ArvinMeritor 16-1/2" x 7" S-cam brakes with cast brake drums for a tandem rear axle.	1
1100-0026	G4 Electronic Stability Control (6x4), Includes RSC and ATC. Not available on 6x6 or commercial chassis.	1
AIR SYSTEM OPTIONS		
1110-0000-001	Inlet for air system. Location: driver door jamb.	1
1110-0002	Air dryer Bendix AD-9.	1
1110-0006	Air lines nylon.	1
1110-0026	Air horns recessed in bumper (PR).	1
1110-0027	Isolated air tank. Includes pressure protection valve.	1
1110-0043	Auxiliary air tank to be plumbed to the following optional accessories (if equipped): Chassis air horns, brake system air outlet, air reel, light tower and or customer/dealer supplied pneumatic add-on(s).	1
ENGINES & TRANSMISSIONS		
1200-0017	Push-button transmission shift selector.	1
1200-0021	TransSynd synthetic transmission fluid for EVS 4000.	1
1200-0096	Electronic speed limiting set at 60 MPH.	1
1200-0239	Eng/Trans Cummins ISX12 500HP with EVS4000 transmission. 2013 EPA Compliant.	1
SECONDARY BRAKING		
1125-0002	Jacobs engine compression brake.	1
1125-0023	Transmission to seek second gear when Jacobs engine brake or Telma retarder is engaged. N/A with Trans retarder.	1
COOLING PACKAGE		
1800-0013	Cooling system for use with Cyclone II X, Typhoon X, and Quest chassis. For use with 2010/2013 EPA engines. Includes coolant recovery system.	1
FUEL SYSTEMS		
1350-0004	Fuel system 50 gallon saddle tanks.	1
1350-0011	Fuel pump electric w/re-prime.	1

1350-0012-670	Fuel shut-off valve. Location: one (1) inlet side of OEM fuel filter.	1
1350-0022	Fuel line hose rubber.	1
ALTERNATOR		
1700-0005	Alternator Leece Neville 320 amp. 320 amp SAE/275 amp NFPA.	1
BATTERIES		
1400-0002	Battery four group 31 1000 CCA.	1
CHASSIS OPTIONS		
1680-0005	Thermatic fan clutch.	1
1680-0007	Drivelines 1810. Required on 1550 lb/ft torque or greater engines.	1
1680-0008	Tow eyes front painted below bumper/cab (PR).	1
1680-0012	Tow eyes rear frame painted.	1
1680-0017	Hotshift PTO.	1
1680-0188	Aerial hydraulics installed on bottom port of EVS4000 transmission (to allow for flat rear cab floor). Requires drive through hyd pump option (6150-0015) on aerials with hyd generator (10 kw max).	1
1680-0250-M58	Diesel Exhaust Fluid (DEF) 5 gallon tank for 2013 EPA engines. Location: left side below rear of cab.	1
1680-0284	Radiator mounted power steering cooler.	1
CAB MODEL		
1520-0008	Cyclone II X medium cab with 58" CA	1
CAB ROOF TYPE		
1615-0004	Cab roof to be "flat" with trough for waterway. Required with HM100 (with waterway), HP100 (all), CR100/92 Pltfm (SdStckr and W/O/P) or HP100 Pltfrm (all).	1
CAB BADGE PACKAGE		
1610-0000	Cab and body to have applicable E-ONE logos.	1
CAB DOOR OPTIONS		
1550-0003	Rear crew cab doors in the medium position.	1
1550-0005	Driver and officer cab door windows. Include forward vent windows.	1
1550-0011	Rear crew cab door windows. Includes manual roll-down actuation. Not available on Typhoon or CII with paddle style door latching.	1
1550-0016	Cab door panels ABS.	1
1550-0025	All cab doors shall have "L" style exterior latches.	1
1550-0027	Front cab door windows to have manual actuation.	1
1550-0037-659	(4) Incandescent cab step area lighting. Locate each light in on each cab door in the inboard position. Lights to be switched with door ajar.	1

1550-0044	All cab door kick plates to be made from diamond plate aluminum.	1
1550-0059-000-G6	Reflective Red/Lemon Yellow printed striping positioned in the "A" formation located on the cab door panels.	1
1550-0077	Interior cab door locks - manual. Will have manual actuation from each respective door. Includes barrel style key lock on each exterior cab door.	1
1550-0084	All cab exterior access doors to have 1250 keyed locks.	1

MIRRORS

1670-0003	Velvac 2010 mirrors. Door mounted west coast style with remote control and heat.	1

MISC EXTERIOR CAB OPTIONS

1550-0020	Windows cab side fixed driver's side.	1
1550-0033	Windows cab side fixed officer's side.	1
1675-0022	Pair of 18" handrails located just behind driver and officer front door one each side.	1
1675-0023	Pair of 18" handrails located just behind driver and officer rear door (ALS doors if equipped) one each side.	1
1675-0030	Mud flaps, front, black with E-ONE logo.	1
1675-0047	Rear cab wall to be 3/16" aluminum diamond plate.	1
1675-0201	Large radius cab wheel well. Includes bolt-on ajustable wheel well trim.	1
1675-0202	Mounting plate for battery charger receptacle, indicator and air inlet (if applicable). Plate to be removable brushed stainless steel.	1

HVAC

1515-0018	Air conditioning for the Typhoon X, CII X and Quest with roof top mounted condenser.	1
1515-0053	Controls for heating and air conditioning shall be located in the center dash area. (Lower area on Typhoon and CII with severe duty dash)	1

SEATS

1510-0003	Seats, Inc. brand 911 cab seats.	1
1510-0007	Seat cover material vinyl.	1
1510-0008	Seat color gray.	1
1510-0035-147	Universal air pack bottle bracket (EA). Location: officer's seat.	1
1510-0035-148	Universal air pack bottle bracket (EA). Location: rear facing driver's side.	1
1510-0035-151	Universal air pack bottle bracket (EA). Location: inboard driver's side rear wall.	1
1510-0035-152	Universal air pack bottle bracket (EA). Location: inboard officer's side rear wall.	1
1510-0035-215	Universal air pack bottle bracket (EA). Location: rear facing officer's side.	1
1510-0038	Driver seat 911 air ride.	1
1510-0042	Officer seat to be 911 fixed SCBA.	1
1510-0050	Rear facing 911 seat with SCBA driver's side.	1

1510-0053	Rear facing 911 seat with SCBA officer's side.	1
1510-0062	Two man bench centered on rear wall with 911 SCBA backs. Includes angled corners.	1
1685-0033	Seating capacity tag of six occupants.	1
MISC INTERIOR CAB OPTIONS		
1685-0000	Cab interior gray. Does not include engine cover or seat color.	1
1685-0005	Lexan sun visors, driver and officer's side overhead.	1
1685-0168	ABS Dash package. Includes center and officer side dash, lower kick panels and "A" post covers.	1
1685-0187	Severe duty engine cover, molded polyurethane.	1
CAB ELECTRICAL OPTIONS		
1750-0013-172	Turn signal Whelen 600 LED amber arrow pair located upper headlight bezel.	1
1750-0024-179-04	Auto-Eject receptacle inlet 20 amp located outside driver's door next to handrail with a Yellow cover.	1
1750-0029	Switch horn button two position DOT/air horn.	1
1750-0046-195	Cab Headlights. Position: lower.	1
1750-0072-593	12 VDC (or 24VDC) electrical outlet in the cab wired battery hot. Location: officer side dash.	2
1750-0075	English dominant main cab gauge cluster.	1
1750-0158	Dome Lts Red/White LED. Package includes two lights mounted in the front and two mounted in the rear of the cab. White light wired through door and light assembly switch. Red light through light assembly switch.	1
1750-0188	DPF regeneration override switch.	1
1750-0198-A31	Battery charger to be located behind driver's seat.	1
1750-0343	Battery charger E-ONE LPC 20. 120 volt inlet, 20 amp output.	1
1750-0435	Halogen cab headlights. TyphoonX, CIIX and QST2 only.	1
BODY SPEC		
3090-0000	Body Specs - SideStacker aerial with tandem axle. Includes left rear staircase with pocket style drop down step.	1
BODY COMPT REAR		
3110-0058	Rear of body to have flush un-painted smooth plate body panels to facilitate rear body striping.	1
AERIAL BODY OPTIONS		
3310-0002	Compartments driver side CR100/95 platform SideStacker with 300g tank. Includes rescue style compartments.	1
3310-0014	Compartments officer side CR100/CR137/95 platform SideStacker with 300g tank. Includes rescue style extended height compartments ahead of wheel well with extended hosebed.	1

3310-0032	Recessed tubes for (6) pike poles. Not available on HP75 SideStacker.	1
3310-0050	Crosslay triple 5.5" wide single stack to hold up to 200' of 2.0" DJ (each) or 150'-200' 2.5" DJ (each). Includes storage pan to rear of crosslays	1
3310-0069	Rear ladder tunnel doors. Vertically hinged smooth plate to match rear body finish.	1
3310-0162	Jack leg opening covers diamond plate (4) sets. Includes diamond plate outrigger covers and fixed diamond plate filler panels. HM100/110 requires surface mount warning lights.	1
3310-0303	Auxiliary jack pad 24X24 (4) with 20 degree formed handle. Includes (4) mounting brackets.	1
DOORS		
3300-0007-017	Door single vertical hinged painted. Location(s): R3	1
3300-0011-005	Door single horizontal hinged lift-up box pan configuration painted. Location(s): L3	1
3300-0011-006	Door single horizontal hinged lift-up box pan configuration painted. Location(s): L4	1
3300-0017-003	Door roll up short (up to 45") with satin finish ROM. Location(s): L1.	1
3300-0017-007	Door roll up short (up to 45") with satin finish ROM. Location(s): L5.	1
3300-0019-004	Door roll up tall (greater than 45") with satin finish ROM. Location(s): L2.	1
3300-0019-008	Door roll up tall (greater than 45") with satin finish ROM. Location(s): L6.	1
3300-0019-015	Door roll up tall (greater than 45") with satin finish ROM. Location(s): R1.	1
3300-0019-016	Door roll up tall (greater than 45") with satin finish ROM. Location(s): R2.	1
3300-0164-018	Door double vertical hinged w/rotary latches - painted . Location(s): R4	1
SHELVES		
3370-0052-004	Adjustable shelf (J-Style) for non-transverse compartments 16" or greater in depth. Location: L2.	1
3370-0052-083	Adjustable shelf (J-Style) for non-transverse compartments 16" or greater in depth. Location: L6 lower.	1
3370-0052-087	Adjustable shelf (J-Style) for non-transverse compartments 16" or greater in depth. Location: R2 lower.	1
3370-0053-069	Adjustable shelf (C-Style) for non-transverse compartments up to 15.99" in depth. Location: L1 lower.	1
3370-0053-073	Adjustable shelf (C-Style) for non-transverse compartments up to 15.99" in depth. Location: R1 lower.	1
3370-0053-081	Adjustable shelf (C-Style) for non-transverse compartments up to 15.99" in depth. Location: L5 lower.	1
3370-0054-004	Tracks for adjustable shelf and/or adjustable tray in compartments 16" or greater in depth. Location: L2.	1
3370-0054-083	Tracks for adjustable shelf and/or adjustable tray in compartments 16" or greater in depth. Location: L6 lower.	1
3370-0054-087	Tracks for adjustable shelf and/or adjustable tray in compartments 16" or greater in	1

	depth. Location: R2 lower.	
3370-0055-069	Tracks for adjustable shelf in shallow compartments up to 15.99" deep. Location: L1 lower.	1
3370-0055-073	Tracks for adjustable shelf in shallow compartments up to 15.99" deep. Location: R1 lower.	1
3370-0055-081	Tracks for adjustable shelf in shallow compartments up to 15.99" deep. Location: L5 lower.	1
COVERS		
3305-0007-000-02	Vinyl Red hose bed cover with attached rear flap(s).	1
3305-0008-000-02	Vinyl Red crosslay cover with attached side flaps.	1
PUMP PANELS		
3134-0016	Stainless steel driver and officer side pump panels.	1
3134-0064	The gauge panel(s) on the driver side of the Side Mount module to be hinged upward. Panel(s) to include (2) mechanical/pneumatic (as applicable to panel size) hold opens and latches.	1
3134-0100	Officer side upper pump access panel to be horizontally hinged with diamond plate door. Includes (2) push button latches and (1) hold open device.	1
MISC PUMP PANEL OPTIONS		
4460-0003	Pump panel tags color coded per NFPA compliance.	1
WATER TANK		
4010-0195	300 gallon "T" water tank. UPF Poly III blue fill tower.	1
TANK PLUMBING		
4450-0010	2" tank fill Akron manual valve.	1
4450-0022	3" tank to pump Akron manual valve.	1
LADDER STORAGE / RACKS		
3365-0013-607	Center mounted ladder tunnel. Ladder rack to hold: (2) PEL-35, PEL-28, PEL-24, PRL-20, PRL-16 and FL-10 (with rubber block feet).	1
HANDRAILS / STEPS		
3330-0002-050	Slide-out platform, rollerless. Includes chrome grab handle centered on the front face of the platform (includes hand rail as applicable). Located below driver side pump panel.	1
3330-0105-060	Dual lighted LED folding step. Location: officer side front compartment face. Each location requires a minimum of (1) handrail per NFPA.	3
3330-0105-062	Dual lighted LED folding step. Location: driver side front compartment face. Each location requires a minimum of (1) handrail per NFPA.	3
MISC BODY OPTIONS		
3090-0001	Hose bed capacity aerial. Provide standard size hose bed.	1

3090-0002	OAH. Unit has no overall height restrictions.	1
3090-0004	OAL. Unit has no overall length restrictions.	1
3340-0093	Mud flaps, rear, black with E-ONE logo.	1
3340-0107	Diamond plate tandem axle wheel well. Includes bolt-on composite wheel well liners and fenderettes.	1
3340-0270	The painted aerial body side panels shall be smooth / flush. Applies to SideStacker HB side, panels next to water tank on MM, and upper body sides on RLP.	1
SCBA BOTTLE STORAGE		
3320-0009	SCBA Bottle Storage. (8) Cast Product SCBA bottle storage with gasketed doors. (4) each side in rear wheel well area.	1
3320-0100	Strap(s), loop style to retain SCBA bottle(s). Locate one per bottle in each exterior storage compartment.	8
PUMPS		
4005-0016	Hale QMAX 1000-2250 GPM single stage pump.	1
4005-0031	Rating 1500 GPM.	1
PUMP CERTIFICATION		
4475-0000	Pump certification 750-2250 GPM	1
PUMP OPTIONS		
4015-0008	Zinc anodes for Hale pump (PR), (1) discharge side and (1) intake side.	1
4015-0022	Mechanical pump seal - Hale.	1
4015-0052-198	Steamers to be Flush. Location: driver's side.	1
4015-0052-199	Steamers to be Flush. Location: officer's side.	1
4015-0073	Manual operated master pump drain. The master drain shall be clearly marked and placed in accessible location rearward below running board on driver side or L1 compartment.	1
4015-0210	Pump cooler with Innovative Control 1/4 turn valve with "T" handle and label.	1
INTAKES		
4440-0005	2.5" Left Intake Akron Manual Valve.	1
INTAKE OPTIONS		
4445-0009	Intake relief valve, Akron.	1
DISCHARGES AND PRECONNECTS		
4415-0012-654	1.5" crosslay with Akron manual valve. Location: crosslay 1 & 2.	2
4415-0014-581	2.5" Left Pump Panel Discharge Akron Manual Valve. Location: left side discharge 1.	1
4415-0014-582	2.5" Left Pump Panel Discharge Akron Manual Valve. Location: left side discharge 2.	1

4415-0016-584	2.5" Right Pump Panel Discharge Akron Manual Valve. Location: right side discharge 2.	1
4415-0051	4" Waterway Discharge with 3" Akron Manual Valve.	1
4415-0054-583	4" Right Pump Panel Discharge with 3" Akron Manual Valve (Waterous pumps noted location to be forward lower port). Location: right side discharge 1.	1
4415-0058-655	2.5" Crosslay Akron Manual Valve. Location: crosslay 3.	1
DISCHARGE OPTIONS		
4417-0176	Innovative Controls 3/4" bleeder/drain valve include lift lever with ergonomic grip.	8
4417-0185	Innovative Controls discharge and intake bezels with integral color code and verbiage for side mount pump panel.	1
PRESSURE GOVERNORS		
4465-0011	Class 1 TPG pressure governor. Includes, water, oil, volt and tachometer.	1
GAUGES		
4435-0083	Innovative Controls 10 LED SL series water tank level gauge. On pump panel.	1
4435-0246	2.5" Innovative Controls stainless steel case pressure gauge (0-400) with color code bezel.	8
4435-0247	4" Innovative Controls stainless steel case master pressure gauges with bezel. Intake 30-0-400, and discharge 0-400.	1
ELECTRICAL SYSTEMS		
5010-0013-Y83	Vehicle data recorder - 2009 NFPA compliant. Includes occupant detection with display. Display location: inboard on driver's side overhead console.	1
5010-0039	V-MUX Electrical system for aerials.	1
5010-0059-339	VFD Text display for V-MUX electrical system. Location: center of dash.	1
LIGHT BARS		
5300-0084-034	Whelen Mini-Freedom LED light bars (PR) model FNMINI 24" with red/clear lenses and MKEZ7 mounts. Location: front cab corners.	1
WARNING LIGHT PACKAGES		
5550-0059-538	Whelen Super LED lower level warning light package. Includes (8) red 600 LED light heads and (2) red 500 LED light heads w/chrome flanges. Locate side facing lights: at forward most position, in rear wheel well offset to front, and side facing at rear of body in rubrail if equipped.	1
WARNING LIGHTS		
5600-0078-290-06	Whelen Super LED beacon (PR) model L31H with Red domes. Location above L2/R2 compartments offset rearward to supplement upper rear warnings.	1
5600-0078-479-06	Whelen Super LED beacon (PR) model L31H with Red domes. Location rear upper body on aerial style brackets.	1
5600-0105-170	Hazard (door ajar) light 2" LED. Location: center overhead.	1

SIRENS		
5500-0015	Whelen model 295SLSA1 siren with microphone (replaced 295HFSA1).	1
5500-0024-170	The electronic siren control is to be located on the center overhead.	1
SPEAKERS		
5510-0029-209	Speaker, Federal Signal Dynamax ES100 with "E-ONE" grille through bumper. Location: driver side front bumper.	1
DOT LIGHTING		
5150-0006	Whelen 600 series LED horizontal mount tail lights. Includes LED stop/tail, arrow turn and halogen back-up lights with horizontal Cast 3 housing and weatherproof connectors.	1
5150-0017	License plate light LED with chrome housing located at the rear of the body.	1
5150-0026	Marker light LED body/cab package. E-ONE custom cab with aerial ladder, Mid-Mount platform or Bronto bodies only.	1
LIGHTS - COMPARTMENT, STEP & GROUND		
5380-0032	Ground light package LED - large.	1
5380-0036	Step light package body LED - small.	1
5380-0136	Compartment light package Amdor Luma-Bar LED for large bodies. Includes one light per compartment (two if transverse).	1
LIGHTS - DECK AND SCENE		
5390-0007	Deck/scene light circuit wiring through chassis reverse. Requires rear deck or scene light.	1
5390-0076	Hose bed light Truck-Lite LED model 81380. Locate at front of hose bed. Switched with work light switch in cab.	1
5390-0102	Crosslay light Truck-Lite LED model 81380. Locate to rear of crosslay (SM) and forward of crosslay (TM as applicable). Switched with work light switch in cab.	1
5390-0152-444	Whelen 600 series gradient Super LED surface mounted scene lights (PR) with weatherproof connectors. Switch in cab (driver and officer side lights switched separately). Locate (1) each side over rear ladder tunnel.	1
LIGHTS - NON-WARNING		
5400-0003	Engine compartment light (EA).	1
5400-0010	Incandescent pump compartment light (EA).	1
5400-0054	Spotlight Specialty 2150 hand held located on officer's side of cab dash w/12V receptacle.	1
5400-0092	Weldon pump panel LED light package with (3) lights per side pump panel. Pump panels over 45" may require additional lights. Side mount only.	1
CONTROLS / SWITCHES		
5100-0000-199	Foot switch to control air horns located officer's side.	1
5100-0007-198	Foot switch to control electronic siren located driver's side.	1

CAMERAS / INTERCOM		
6570-0008	Intercom aerial 2-way. Atkinson Dynamics (Federal). Speaker to be located to rear of platform on Bronto units.	1
MISC ELECTRICAL		
1750-0082-762	12V power distribution module. Includes (6) battery hot and (6) switched hot circuits. 100 amps max (IATS). Location: behind officer's seat.	1
5110-0017	Back-up alarm 97 dB.	1
LIGHTS - QUARTZ		
5450-0144-063	Fire Research Evolution 12V LED scene light model FCA530-V15-SW-H with external push-up pole. Includes switch in cab accessible to driver. Location: officer side back of cab.	1
5450-0144-064	Fire Research Evolution 12V LED scene light model FCA530-V15-SW-H with external push-up pole. Includes switch in cab accessible to driver. Location: driver side back of cab.	1
AERIAL MODEL		
6100-0034	Ladder CR137 SideStacker with waterway to 110'. Includes left side console with cover, turntable mansaver bars, split steps at tip and jack leg flood lights.	1
AERIAL HYDRAULIC SYSTEM OPTIONS		
6150-0003-216	Gauge aerial hydraulic oil level. Electronic display to be located on pump operator's panel.	1
AERIAL CONTROLS		
6850-0026	Direct hydraulic aerial control system.	1
MONITORS		
6300-0002	Monitor Akron electric 1000 GPM for ladder. Includes tip and base controls.	1
6300-0017	Monitor painted silver from OEM.	1
AERIAL WARNING LIGHTS		
6550-0002	Outrigger warning lights (4) LED. Truck-Lite model 91R.	1
AERIAL LIGHTING		
6560-0002-231	Spot light 12V located left side tip.	1
6560-0003-232	Flood light 12V located right side tip.	1
6560-0005	Flood lights Unity at base (PR).	1
6560-0032	Locate spot, flood and /or quartz lights on ladder fly section as far back from tip as possible.	1
WATERWAY OPTIONS		
6350-0005	Rear 4" NST waterway inlet for rear mounted aerials. Includes chrome cap.	1
6350-0010	Flowminder with single readout and totalizer for the aerial waterway to be located at the aerial control station.	1

6350-0067	2.5" Innovative Controls stainless steel case pressure gauge (0-400) with color code bezel. Locate next to waterway inlet.	1
AERIAL EQUIPMENT		
6500-0011-139	Pike pole tube for 6' pole on ladder. Location: right side fly section.	1
6500-0019-138	Axe bracket mounted on aerial. For use with a 6 lb. axe only. Location: left side fly section.	1
AERIAL LADDER BRACKETS		
6600-0004-250	Lift out style roof ladder bracket. Locate outside base section for a PRL-16 on left side of base section. Available on 95RM, 110, CR100 and HM100.	1
SIGN PLATES		
6750-0002-000-39	Aerial sign plates 22 x 144 (PR). Available on HM100, HM110, 95, CR100 and CR137 only. Does not include lettering. Color: Job Color.	1
AERIAL TESTING		
6900-0000	Aerial flow test - 3rd party.	1
6900-0002	Aerial 2009 NFPA Certification.	1
ELBOWS		
7400-0004	Elbow 30 degree chrome swivel w/2.5"FNST x 2.5"MNST.	3
HAND TOOLS		
7600-0005	Pike Pole Fiberglass 6'.	3
7600-0007	Pike Pole Fiberglass 10'.	2
7600-0008	Pike Pole Fiberglass 12'.	2
GROUND LADDERS		
7800-0010	Alco-Lite PRL-16' roof ladder.	2
7800-0016	Alco-Lite PEL-24' 2-section extension ladder.	1
7800-0021	Alco-Lite PEL-28' extension ladder.	1
7800-0024	Alco-Lite PEL-35' extension ladder.	2
7800-0032	Alco-Lite FL-10, 10' folding ladder w/safety shoes.	1
7800-0038	Alco-Lite PRL-20' roof ladder.	1
MISC LOOSE EQUIPMENT		
7600-0016	Wheel chocks 44" NFPA compliant, pair (PR) of Zico SAC-44. Up to 44" diameter tires. Includes mounting brackets.	4
7900-0014	DOT Required Drive Away Kit - Kit includes three (3) triangular warning reflectors with carrying case. This kit is for the end user and is to remain with the truck.	1
EXTERIOR PAINT		
8100-0071	Undercoating E-ONE.	1
8100-0084	All applicable pump/pre-connect application modules are to have a job color finish.	1

	Includes upper and lower pump modules, crosswalk module and/or speedlay/pre-connect module (as applicable). Rear mounted body/pump module to be painted job color.	
8100-0116	Rear body surface to have a sanded finish (not painted job color). Includes hinged doors that do not have discrete sales codes and removable panels.	1
8100-0176-000-17	Paint E-ONE chassis cab - Sikkens paint. Color: FLNA3225E-1 Red.	1
8100-0183-000-17	Paint Body - Large - For Aerials, T/A Tankers/Wetsides, Rear Mounts and Rescues. Sikkens paint. Color: FLNA3225E-1 Red.	1
8100-0354	Paint lift cylinders, extension cylinders and upper turntable steelwork primary job color (does not apply to TT deck).	1
INTERIOR PAINT		
8150-0011	The interior of the cab to be painted Zolatone gray.	1
STRIPING		
8200-0016	White reflective tape on (4) outriggers.	1
8300-0002-334-12	NFPA Scotchlite Stripe - 4" wide and straight on front/sides of cab and sides/rear of body. Color: White. Location: bottom of stripe flush with top of bumper and straight back.	1
8300-0042	White rubrail scotchlite insert.	1
8300-0123-000-72	Chevron "A" style 6" printed pattern NFPA Scotchlite striping. Provided to driver and officer rear compartment face, smooth plate panels and/or doors outboard and above the center rear compartment opening and the vertical hosebed extrusions (terminate just above the upper hand rail stanchion). The vertical and horizontal extrusions inboard of the vertical hose bed extrusions shall remain visible with a sanded finish. Colors to be Yellow/Red.	1
GRAPHICS		
8400-0022	Logo E-ONE (PR) on aerial lift cylinder. Logo to be black and white reflective material approx 14" long located midway along outward surface of cylinder.	1
WARRANTY / STANDARD & EXTENDED		
9100-0000	Standard 1 Year Warranty.	1
9100-0003	Lifetime Frame Warranty.	1
9100-0004	10 Year/100,000 Mile Structural Warranty for Alum Cab / Body - Statement of Warranty.	1
9100-0005	10 Year Stainless Steel Plumbing Warranty - Statement of Warranty.	1
9100-0007	20 Year Aerial Device Structural Warranty - Integrity Limited Warranty.	1
9100-0019	10 Year Limited Paint and Perforation Warranty - For Sikkens Paint.	1
SUPPORT, DELIVERY, INSPECTIONS AND MANUALS		
9300-0000	Vehicle familiarization aerial (Domestic).	1
9300-0009	Manuals, Operator and Service CD-ROM.	1
9300-0016	Approval Drawings-Standard.	1

9300-0316	Fire Apparatus Safety Guide published by FAMA, latest edition.	1	
PRICE	2016 E-ONE CR137 AERIAL - CYCLONE CUSTOM CHASSIS		$872,580

STATE OF OHIO TERM SCHEDULE

4200 SURFACE RD
COLUMBUS, OH 43228

Quote No: 57493

3/13/2015

Quote Rev:18 Drawing Rev:4

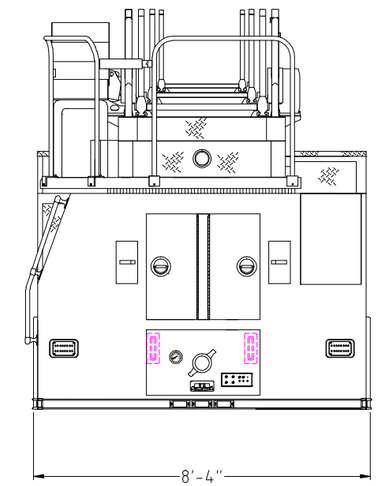

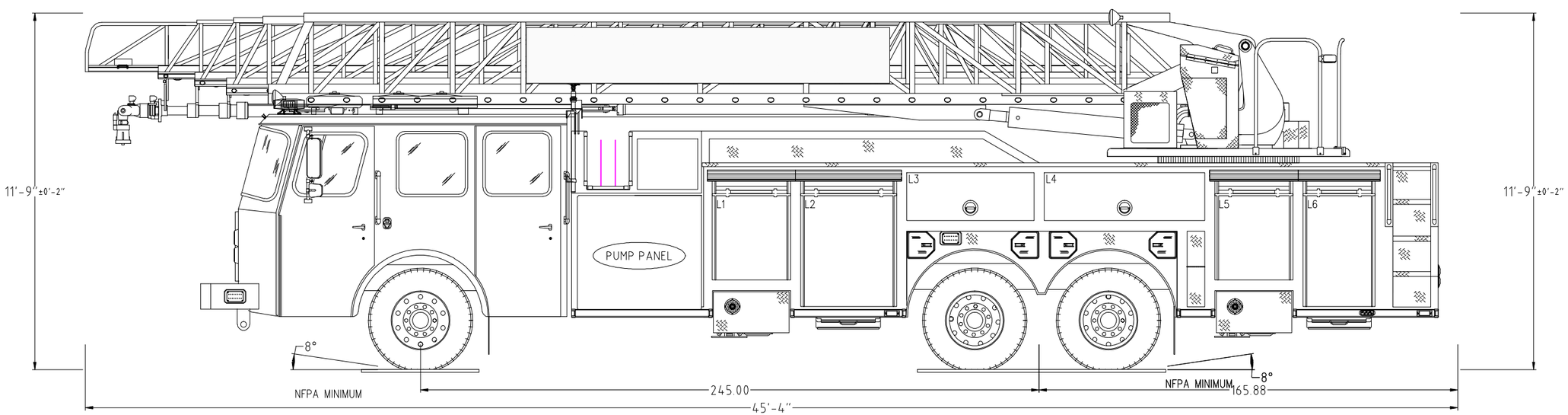

POWERED BY EZDRAW

Notice: This drawing provides a GENERAL REPRESENTATION of the vehicle configuration and should be used for evaluation purposes. The respective dimensions shown,including overall height and length, are estimates and may vary due to manufacturing processes. All other items such as lighting and fixtures, plumbing, compartmentation, and other generally assembled details are shown for REFERENCE ONLY and may not be a direct reflection of the final truck configuration. In ALL situations where this drawing may conflict with the specifications, THE SPECIFICATIONS, AS REFLECTED IN THE APPROVED SHOP ORDER, SHALL PREVAIL. Unless otherwise specified, the proposed apparatus will be manufactured to the latest NFPA recommendations as well as other applicable federally regulated safety regulations. E-One reserves the right to engineer and incorporate design improvements and changes without notice, while adhering to the intent of the specification.

1500 GPM HALE QMAXPUMP
0 TOTAL VOLUME
0 TOTAL FOAM

HOSE LOADS :

	OPENING		INTERIOR DIMENSIONS				
COMPT.	WIDTH	HEIGHT	WIDTH	LOWER HEIGHT	LOWER DEPTH	UPPER HEIGHT	UPPER DEPTH
L1	29	34.5	31	42.5	14	34.5	19
L2	36	45	38	53	26	45	26
L3	50.5	19	50.5	N/A	N/A	19	26
L4	63.5	19	63.5	N/A	N/A	19	20
L5	29	34.5	31	42.5	14	34.5	18
L6	26.5	45	28.5	53	22	45	18
R1	29	47	31	55	14	47	19
R2	36	57.5	38	65.5	26	57.5	19
R3	31	19.5	31	30	14	N/A	N/A
R4	49.5	30	49.5	30	22	N/A	N/A

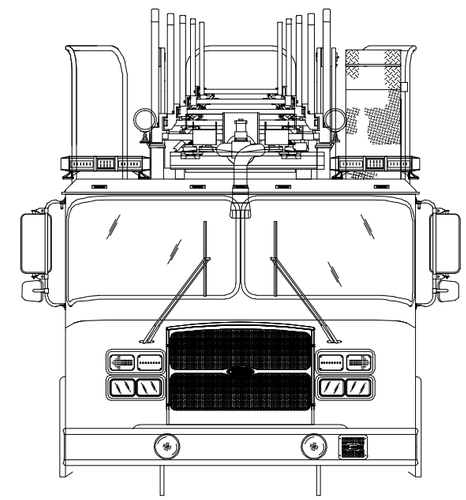

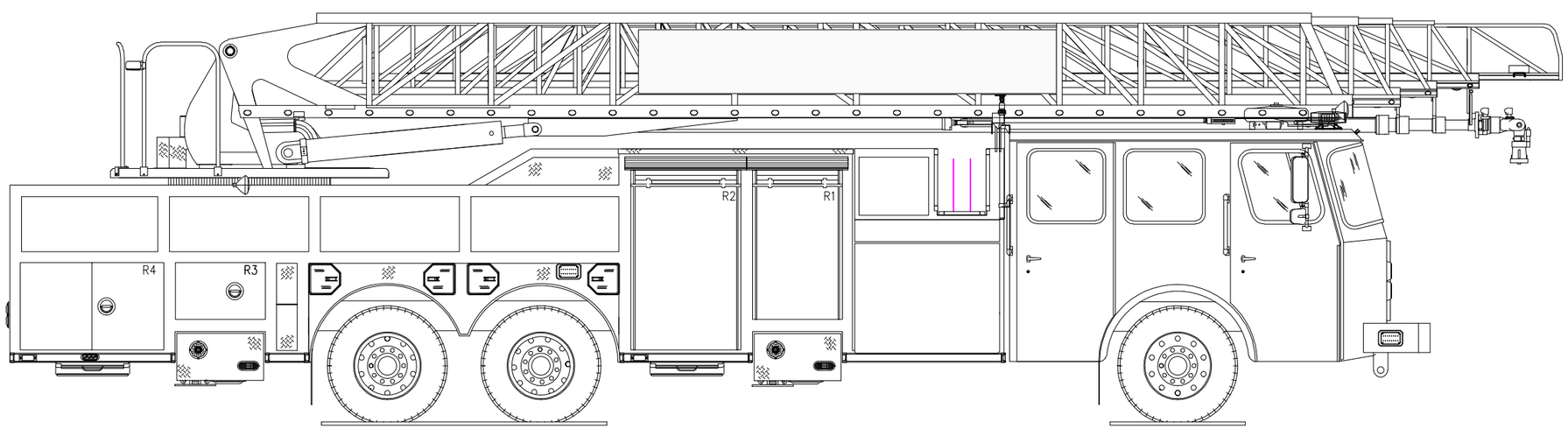

POWERED BY EZDRAW

Fire Apparatus Quotation for:
STATE OF OHIO TERM SCHEDULE

Quotation Number: 57494 Rev: 21

Unit Description: AERM-CYC2-100P

Quote Description: Aerial Rear Mount, Cyclone II, 100 Foot Platform

Salescode	Extended Description	Qty
TESTING COMPLIANCE STANDARD		
1001-0015	The E-ONE supplied components of the vehicle shall meet the requirements of NFPA 1901, 2009 edition.	1
BUMPERS		
1160-0000	Bumper 10" stainless steel.	1
1160-0010	1/8" Front Bumper Gravel Shield.	1
1160-0013	16" Front Bumper Gravel Shield Extension.	1
FRAME ASSEMBLY		
1250-0014	Frame - Torque box for HP100 platform.	1
AXLE OPTIONS		
1025-0002	Dana 22I 22,800 lb. front axle.	1
1025-0023	Meritor RT-50-160 rear tandem axle 54,000 lb. capacity.	1
1025-0028	Koni shock absorbers for front axle - adjustable.	1
SUSPENSIONS		
1070-0015	Ridewell Dynalastic rear suspension (40-54K) rated equal to the capacity of the axles.	1
WHEEL OPTIONS		
1050-0007	Front axle wheel trim kit. Includes stainless steel lug nut covers (chrome plated plastic if applicable) and center cap with E-ONE logo. Note: Center cap will have an inspection port IPO a logo if equipped with Stemco oil seals.	1
1050-0009	Rear axle (tandem) wheel trim kit. Includes stainless steel lug nut covers (chrome plated plastic if applicable) and center caps with E-ONE logo. E-ONE custom chassis w/steel wheels will have chrome plated plastic lug covers.	1
1050-0044	Accuride aluminum wheels for front axle (2).	1
1050-0046	Accuride aluminum wheels for rear axles (8).	1

TIRE OPTIONS		
1060-0022	Eight Michelin 12R rear tires with XDN2 mud and snow tread.	1
1060-0046	Two Michelin 425 tires model XFE for front axle.	1
1060-0119	RWC AirGuard LED tire pressure monitoring valve stem caps (10) for tandem rear axle applications.	1
BRAKE SYSTEMS		
1100-0006	Parking brake release mounted on the driver's side lower dash.	1
1100-0008	Brake system air 6X4.	1
1100-0014	ArvinMeritor 16-1/2" x 7" S-cam brakes with cast brake drums for a tandem rear axle.	1
1100-0026	G4 Electronic Stability Control (6x4), Includes RSC and ATC. Not available on 6x6 or commercial chassis.	1
1100-0031	Dana ESD225 17" disc brakes for front axle.	1
AIR SYSTEM OPTIONS		
1110-0000-001	Inlet for air system. Location: driver door jamb.	1
1110-0002	Air dryer Bendix AD-9.	1
1110-0006	Air lines nylon.	1
1110-0026	Air horns recessed in bumper (PR).	1
1110-0027	Isolated air tank. Includes pressure protection valve.	1
1110-0043	Auxiliary air tank to be plumbed to the following optional accessories (if equipped): Chassis air horns, brake system air outlet, air reel, light tower and or customer/dealer supplied pneumatic add-on(s).	1
ENGINES & TRANSMISSIONS		
1200-0017	Push-button transmission shift selector.	1
1200-0021	TransSynd synthetic transmission fluid for EVS 4000.	1
1200-0096	Electronic speed limiting set at 60 MPH.	1
1200-0239	Eng/Trans Cummins ISX12 500HP with EVS4000 transmission. 2013 EPA Compliant.	1
SECONDARY BRAKING		
1125-0002	Jacobs engine compression brake.	1
1125-0023	Transmission to seek second gear when Jacobs engine brake or Telma retarder is engaged. N/A with Trans retarder.	1
COOLING PACKAGE		
1800-0013	Cooling system for use with Cyclone II X, Typhoon X, and Quest chassis. For use with 2010/2013 EPA engines. Includes coolant recovery system.	1
FUEL SYSTEMS		
1350-0005	Fuel system 65 gallons.	1

1350-0011	Fuel pump electric w/re-prime.	1
1350-0012-670	Fuel shut-off valve. Location: one (1) inlet side of OEM fuel filter.	1
1350-0022	Fuel line hose rubber.	1
ALTERNATOR		
1700-0005	Alternator Leece Neville 320 amp. 320 amp SAE/275 amp NFPA.	1
BATTERIES		
1400-0002	Battery four group 31 1000 CCA.	1
CHASSIS OPTIONS		
1680-0005	Thermatic fan clutch.	1
1680-0007	Drivelines 1810. Required on 1550 lb/ft torque or greater engines.	1
1680-0008	Tow eyes front painted below bumper/cab (PR).	1
1680-0012	Tow eyes rear frame painted.	1
1680-0017	Hotshift PTO.	1
1680-0188	Aerial hydraulics installed on bottom port of EVS4000 transmission (to allow for flat rear cab floor). Requires drive through hyd pump option (6150-0015) on aerials with hyd generator (10 kw max).	1
1680-0250-M58	Diesel Exhaust Fluid (DEF) 5 gallon tank for 2013 EPA engines. Location: left side below rear of cab.	1
1680-0284	Radiator mounted power steering cooler.	1
CAB MODEL		
1520-0008	Cyclone II X medium cab with 58" CA	1
CAB ROOF TYPE		
1615-0004	Cab roof to be "flat" with trough for waterway. Required with HM100 (with waterway), HP100 (all), CR100/92 Pltfm (SdStckr and W/O/P) or HP100 Pltfrm (all).	1
CAB BADGE PACKAGE		
1610-0000	Cab and body to have applicable E-ONE logos.	1
CAB DOOR OPTIONS		
1550-0003	Rear crew cab doors in the medium position.	1
1550-0005	Driver and officer cab door windows. Include forward vent windows.	1
1550-0011	Rear crew cab door windows. Includes manual roll-down actuation. Not available on Typhoon or CII with paddle style door latching.	1
1550-0016	Cab door panels ABS.	1
1550-0025	All cab doors shall have "L" style exterior latches.	1
1550-0027	Front cab door windows to have manual actuation.	1
1550-0038-659	(4) LED cab step area lighting. Locate each light on each cab door in the inboard	1

	position. Lights to be switched with door ajar.	
1550-0044	All cab door kick plates to be made from diamond plate aluminum.	1
1550-0059-000-G6	Reflective Red/Lemon Yellow printed striping positioned in the "A" formation located on the cab door panels.	1
1550-0077	Interior cab door locks - manual. Will have manual actuation from each respective door. Includes barrel style key lock on each exterior cab door.	1
1550-0084	All cab exterior access doors to have 1250 keyed locks.	1
MIRRORS		
1670-0003	Velvac 2010 mirrors. Door mounted west coast style with remote control and heat.	1
MISC EXTERIOR CAB OPTIONS		
1550-0020	Windows cab side fixed driver's side.	1
1550-0033	Windows cab side fixed officer's side.	1
1675-0022	Pair of 18" handrails located just behind driver and officer front door one each side.	1
1675-0023	Pair of 18" handrails located just behind driver and officer rear door (ALS doors if equipped) one each side.	1
1675-0030	Mud flaps, front, black with E-ONE logo.	1
1675-0047	Rear cab wall to be 3/16" aluminum diamond plate.	1
1675-0201	Large radius cab wheel well. Includes bolt-on ajustable wheel well trim.	1
1675-0202	Mounting plate for battery charger receptacle, indicator and air inlet (if applicable). Plate to be removable brushed stainless steel.	1
HVAC		
1515-0018	Air conditioning for the Typhoon X, CII X and Quest with roof top mounted condenser.	1
1515-0053	Controls for heating and air conditioning shall be located in the center dash area. (Lower area on Typhoon and CII with severe duty dash)	1
1685-0057	Heaters cab rear with covers (PR), and front heater with heat to the feet for the driver and officer.	1
SEATS		
1510-0003	Seats, Inc. brand 911 cab seats.	1
1510-0007	Seat cover material vinyl.	1
1510-0008	Seat color gray.	1
1510-0035-147	Universal air pack bottle bracket (EA). Location: officer's seat.	1
1510-0035-148	Universal air pack bottle bracket (EA). Location: rear facing driver's side.	1
1510-0035-151	Universal air pack bottle bracket (EA). Location: inboard driver's side rear wall.	1
1510-0035-152	Universal air pack bottle bracket (EA). Location: inboard officer's side rear wall.	1
1510-0035-215	Universal air pack bottle bracket (EA). Location: rear facing officer's side.	1

1510-0038	Driver seat 911 air ride.	1
1510-0042	Officer seat to be 911 fixed SCBA.	1
1510-0050	Rear facing 911 seat with SCBA driver's side.	1
1510-0053	Rear facing 911 seat with SCBA officer's side.	1
1510-0062	Two man bench centered on rear wall with 911 SCBA backs. Includes angled corners.	1
1685-0033	Seating capacity tag of six occupants.	1
MISC INTERIOR CAB OPTIONS		
1685-0000	Cab interior gray. Does not include engine cover or seat color.	1
1685-0005	Lexan sun visors, driver and officer's side overhead.	1
1685-0168	ABS Dash package. Includes center and officer side dash, lower kick panels and "A" post covers.	1
1685-0187	Severe duty engine cover, molded polyurethane.	1
CAB ELECTRICAL OPTIONS		
1750-0013-172	Turn signal Whelen 600 LED amber arrow pair located upper headlight bezel.	1
1750-0024-179-04	Auto-Eject receptacle inlet 20 amp located outside driver's door next to handrail with a Yellow cover.	1
1750-0029	Switch horn button two position DOT/air horn.	1
1750-0046-195	Cab Headlights. Position: lower.	1
1750-0072-593	12 VDC (or 24VDC) electrical outlet in the cab wired battery hot. Location: officer side dash.	2
1750-0075	English dominant main cab gauge cluster.	1
1750-0158	Dome Lts Red/White LED. Package includes two lights mounted in the front and two mounted in the rear of the cab. White light wired through door and light assembly switch. Red light through light assembly switch.	1
1750-0188	DPF regeneration override switch.	1
1750-0198-A31	Battery charger to be located behind driver's seat.	1
1750-0343	Battery charger E-ONE LPC 20. 120 volt inlet, 20 amp output.	1
1750-0435	Halogen cab headlights. TyphoonX, CIIX and QST2 only.	1
BODY SPEC		
3090-0000	Body Specs - SideStacker aerial with tandem axle. Includes left rear staircase with pocket style drop down step.	1
BODY COMPT REAR		
3110-0058	Rear of body to have flush un-painted smooth plate body panels to facilitate rear body striping.	1
AERIAL BODY OPTIONS		
3310-0032	Recessed tubes for (6) pike poles. Not available on HP75 SideStacker.	1
3310-0050	Crosslay triple 5.5" wide single stack to hold up to 200' of 2.0" DJ (each) or 150'-200'	1

	2.5" DJ (each). Includes storage pan to rear of crosslays	
3310-0069	Rear ladder tunnel doors. Vertically hinged smooth plate to match rear body finish.	1
3310-0072	Compartments driver side HP100 Platform SideStacker with 300g tank. Includes rescue style extended height compartments. The door on small compts next to rear outrigger to match wheelwell.	1
3310-0073	Compartments officer side HP100 Platform SideStacker with 300g tank. Includes rescue style extended height compartments ahead of wheel well with extended hosebed.	1
3310-0075	Upper dunnage area extension 34 x 58 diamond plate.	1
3310-0081	Jack leg opening cover diamond plate (4). Includes diamond plate outrigger cover and diamond plate filler panel.	1
3310-0310	Auxiliary jack pad 26X26 (4) with 20 degree formed handle. Includes (2) double mounting brackets.	1
DOORS		
3300-0007-017	Door single vertical hinged painted. Location(s): R3	1
3300-0007-018	Door single vertical hinged painted. Location(s): R4	1
3300-0007-019	Door single vertical hinged painted. Location(s): R5	1
3300-0011-005	Door single horizontal hinged lift-up box pan configuration painted. Location(s): L3	1
3300-0011-006	Door single horizontal hinged lift-up box pan configuration painted. Location(s): L4	1
3300-0017-007	Door roll up short (up to 45") with satin finish ROM. Location(s): L5.	1
3300-0019-003	Door roll up tall (greater than 45") with satin finish ROM. Location(s): L1.	1
3300-0019-004	Door roll up tall (greater than 45") with satin finish ROM. Location(s): L2.	1
3300-0019-015	Door roll up tall (greater than 45") with satin finish ROM. Location(s): R1.	1
3300-0019-016	Door roll up tall (greater than 45") with satin finish ROM. Location(s): R2.	1
3300-0167-008	Door double 3-point vertical hinged w/rotary latches - painted. Location(s): L6	1
SHELVES		
3370-0052-077	Adjustable shelf (J-Style) for non-transverse compartments 16" or greater in depth. Location: L2 lower.	1
3370-0052-081	Adjustable shelf (J-Style) for non-transverse compartments 16" or greater in depth. Location: L5 lower.	1
3370-0052-087	Adjustable shelf (J-Style) for non-transverse compartments 16" or greater in depth. Location: R2 lower.	1
3370-0053-069	Adjustable shelf (C-Style) for non-transverse compartments up to 15.99" in depth. Location: L1 lower.	1
3370-0053-073	Adjustable shelf (C-Style) for non-transverse compartments up to 15.99" in depth. Location: R1 lower.	1
3370-0054-077	Tracks for adjustable shelf and/or adjustable tray in compartments 16" or greater in depth. Location: L2 lower.	1

3370-0054-081	Tracks for adjustable shelf and/or adjustable tray in compartments 16" or greater in depth. Location: L5 lower.	1
3370-0054-087	Tracks for adjustable shelf and/or adjustable tray in compartments 16" or greater in depth. Location: R2 lower.	1
3370-0055-069	Tracks for adjustable shelf in shallow compartments up to 15.99" deep. Location: L1 lower.	1
3370-0055-073	Tracks for adjustable shelf in shallow compartments up to 15.99" deep. Location: R1 lower.	1
COVERS		
3305-0007-000-02	Vinyl Red hose bed cover with attached rear flap(s).	1
3305-0008-000-02	Vinyl Red crosslay cover with attached side flaps.	1
PUMP PANELS		
3134-0016	Stainless steel driver and officer side pump panels.	1
3134-0064	The gauge panel(s) on the driver side of the Side Mount module to be hinged upward. Panel(s) to include (2) mechanical/pneumatic (as applicable to panel size) hold opens and latches.	1
3134-0100	Officer side upper pump access panel to be horizontally hinged with diamond plate door. Includes (2) push button latches and (1) hold open device.	1
MISC PUMP PANEL OPTIONS		
4460-0003	Pump panel tags color coded per NFPA compliance.	1
WATER TANK		
4010-0195	300 gallon "T" water tank. UPF Poly III blue fill tower.	1
TANK PLUMBING		
4450-0010	2" tank fill Akron manual valve.	1
4450-0022	3" tank to pump Akron manual valve.	1
LADDER STORAGE / RACKS		
3365-0076-Q04	Center mounted ladder tunnel. Ladder rack to hold: (2) PEL-35, PEL-28, PEL-24, PRL-20, PRL-16 and FL-10 (with rubber block feet and no handles).	1
HANDRAILS / STEPS		
3330-0002-050	Slide-out platform, rollerless. Includes chrome grab handle centered on the front face of the platform (includes hand rail as applicable). Located below driver side pump panel.	1
3330-0105-060	Dual lighted LED folding step. Location: officer side front compartment face. Each location requires a minimum of (1) handrail per NFPA.	3
3330-0105-062	Dual lighted LED folding step. Location: driver side front compartment face. Each location requires a minimum of (1) handrail per NFPA.	3
MISC BODY OPTIONS		
3090-0001	Hose bed capacity aerial. Provide standard size hose bed.	1

3090-0002	OAH. Unit has no overall height restrictions.	1
3090-0004	OAL. Unit has no overall length restrictions.	1
3340-0058	Recessed fuel fill driver side wheel well.	1
3340-0093	Mud flaps, rear, black with E-ONE logo.	1
3340-0107	Diamond plate tandem axle wheel well. Includes bolt-on composite wheel well liners and fenderettes.	1
3340-0270	The painted aerial body side panels shall be smooth / flush. Applies to SideStacker HB side, panels next to water tank on MM, and upper body sides on RLP.	1

SCBA BOTTLE STORAGE

3320-0009	SCBA Bottle Storage. (8) Cast Product SCBA bottle storage with gasketed doors. (4) each side in rear wheel well area.	1
3320-0100	Strap(s), loop style to retain SCBA bottle(s). Locate one per bottle in each exterior storage compartment.	8

PUMPS

4005-0016	Hale QMAX 1000-2250 GPM single stage pump.	1
4005-0031	Rating 1500 GPM.	1

PUMP CERTIFICATION

4475-0000	Pump certification 750-2250 GPM	1

PUMP OPTIONS

4015-0008	Zinc anodes for Hale pump (PR), (1) discharge side and (1) intake side.	1
4015-0022	Mechanical pump seal - Hale.	1
4015-0052-198	Steamers to be Flush. Location: driver's side.	1
4015-0052-199	Steamers to be Flush. Location: officer's side.	1
4015-0073	Manual operated master pump drain. The master drain shall be clearly marked and placed in accessible location rearward below running board on driver side or L1 compartment.	1
4015-0210	Pump cooler with Innovative Control 1/4 turn valve with "T" handle and label.	1

INTAKES

4440-0005	2.5" Left Intake Akron Manual Valve.	1

INTAKE OPTIONS

4445-0009	Intake relief valve, Akron.	1

DISCHARGES AND PRECONNECTS

4415-0012-654	1.5" crosslay with Akron manual valve. Location: crosslay 1 & 2.	2
4415-0054-583	4" Right Pump Panel Discharge with 3" Akron Manual Valve (Waterous pumps noted location to be forward lower port). Location: right side discharge 1.	1
4415-0058-655	2.5" Crosslay Akron Manual Valve. Location: crosslay 3.	1

4415-0161-581	2.5" Left Panel Discharge Akron Manual Valve w/30 Degree Chrome Droop. Location: left side discharge 1.	1
4415-0161-582	2.5" Left Panel Discharge Akron Manual Valve w/30 Degree Chrome Droop. Location: left side discharge 2.	1
4415-0164-584	2.5" Right Panel Discharge Akron Manual Valve w/30 Degree Chrome Droop. Location: right side discharge 2.	1
4415-0994	4" waterway discharge with 4" Akron electric valve with 9323 controller.	1
DISCHARGE OPTIONS		
4417-0176	Innovative Controls 3/4" bleeder/drain valve include lift lever with ergonomic grip.	8
4417-0185	Innovative Controls discharge and intake bezels with integral color code and verbiage for side mount pump panel.	1
PRESSURE GOVERNORS		
4465-0011	Class 1 TPG pressure governor. Includes, water, oil, volt and tachometer.	1
GAUGES		
4435-0001	Class 1 Intelli-Tank water tank level gauge. On pump panel.	1
4435-0246	2.5" Innovative Controls stainless steel case pressure gauge (0-400) with color code bezel.	8
4435-0247	4" Innovative Controls stainless steel case master pressure gauges with bezel. Intake 30-0-400, and discharge 0-400.	1
ELECTRICAL SYSTEMS		
5010-0013-Y83	Vehicle data recorder - 2009 NFPA compliant. Includes occupant detection with display. Display location: inboard on driver's side overhead console.	1
5010-0039	V-MUX Electrical system for aerials.	1
5010-0059-339	VFD Text display for V-MUX electrical system. Location: center of dash.	1
LIGHT BARS		
5300-0172	Whelen Mini-Freedom LED side facing front cab light bars (PR) model FT8RRRRF 24" with MKEZ7 mounts. All red LEDs with red lenses. For use on rear mount platforms with supplemental upper level Zone A warning lights. Locate one each side front cab corners side facing.	1
WARNING LIGHT PACKAGES		
5550-0059-538	Whelen Super LED lower level warning light package. Includes (8) red 600 LED light heads and (2) red 500 LED light heads w/chrome flanges. Locate side facing lights: at forward most position, in rear wheel well offset to front, and side facing at rear of body in rubrail if equipped.	1
WARNING LIGHTS		
5600-0078-290-06	Whelen Super LED beacon (PR) model L31H with Red domes. Location above L2/R2 compartments offset rearward to supplement upper rear warnings.	1
5600-0078-479-06	Whelen Super LED beacon (PR) model L31H with Red domes. Location rear upper	1

	body on aerial style brackets.	
5600-0105-170	Hazard (door ajar) light 2" LED. Location: center overhead.	1
SIRENS		
5500-0015	Whelen model 295SLSA1 siren with microphone (replaced 295HFSA1).	1
5500-0024-170	The electronic siren control is to be located on the center overhead.	1
SPEAKERS		
5510-0029-209	Speaker, Federal Signal Dynamax ES100 with "E-ONE" grille through bumper. Location: driver side front bumper.	1
DOT LIGHTING		
5150-0007	Whelen 600 series LED vertical mount tail lights. Includes LED stop/tail, arrow turn and halogen back-up lights with vertical Cast 3 housing and weatherproof connectors.	1
5150-0017	License plate light LED with chrome housing located at the rear of the body.	1
5150-0028	Marker light LED body/cab package. E-ONE custom cab with rear mount aerial platform bodies only. Includes (3) marker lights on front of platform.	1
5150-0080-462	Weldon auxiliary turn signal model 9186-8580 LED (PR). Location: (1) each side in center of rear tandem wheel well.	1
LIGHTS - COMPARTMENT, STEP & GROUND		
5380-0032	Ground light package LED - large.	1
5380-0036	Step light package body LED - small.	1
5380-0136	Compartment light package Amdor Luma-Bar LED for large bodies. Includes one light per compartment (two if transverse).	1
LIGHTS - DECK AND SCENE		
5390-0007	Deck/scene light circuit wiring through chassis reverse. Requires rear deck or scene light.	1
5390-0076	Hose bed light Truck-Lite LED model 81380. Locate at front of hose bed. Switched with work light switch in cab.	1
5390-0102	Crosslay light Truck-Lite LED model 81380. Locate to rear of crosslay (SM) and forward of crosslay (TM as applicable). Switched with work light switch in cab.	1
5390-0152-446	Whelen 600 series gradient Super LED surface mounted scene lights (PR) with weatherproof connectors. Switch in cab (driver and officer side lights switched separately). Locate (1) each side at rear below pike pole compts.	1
LIGHTS - NON-WARNING		
5400-0003	Engine compartment light (EA).	1
5400-0010	Incandescent pump compartment light (EA).	1
5400-0054	Spotlight Specialty 2150 hand held located on officer's side of cab dash w/12V receptacle.	1
5400-0092	Weldon pump panel LED light package with (3) lights per side pump panel. Pump panels over 45" may require additional lights. Side mount only.	1

CONTROLS / SWITCHES		
5100-0000-199	Foot switch to control air horns located officer's side.	1
5100-0007-198	Foot switch to control electronic siren located driver's side.	1
CAMERAS / INTERCOM		
6570-0008	Intercom aerial 2-way. Atkinson Dynamics (Federal). Speaker to be located to rear of platform on Bronto units.	1
MISC ELECTRICAL		
1750-0082-762	12V power distribution module. Includes (6) battery hot and (6) switched hot circuits. 100 amps max (IATS). Location: behind officer's seat.	1
5110-0017	Back-up alarm 97 dB.	1
LIGHTS - QUARTZ		
5450-0144-063	Fire Research Evolution 12V LED scene light model FCA530-V15-SW-H with external push-up pole. Includes switch in cab accessible to driver. Location: officer side back of cab.	1
5450-0144-064	Fire Research Evolution 12V LED scene light model FCA530-V15-SW-H with external push-up pole. Includes switch in cab accessible to driver. Location: driver side back of cab.	1
AERIAL MODEL		
6100-0018	Platform HP100 with SideStacker T/T. Includes left side roll top console, turntable mansaver bars and jack leg flood lights.	1
AERIAL HYDRAULIC SYSTEM OPTIONS		
6150-0003-216	Gauge aerial hydraulic oil level. Electronic display to be located on pump operator's panel.	1
AERIAL CONTROLS		
6850-0008	Platform leveling system to allow adjustment of platform pivot angle from cab. Includes light on back of platform visible by driver to indicate platform is in alignment with ladder.	1
MONITORS		
6300-0007	Monitor Akron electric 1250GPM for platform. Includes tip controls, base controls and butterfly valve.	1
6300-0017	Monitor painted silver from OEM.	1
AERIAL WARNING LIGHTS		
6550-0002	Outrigger warning lights (4) LED. Truck-Lite model 91R.	1
6550-0014	Whelen 600 Super LED red warning lights (4). Located down low across front of platform wired to upper level lights.	1
6550-0017-224-06	Whelen 600 Super LED Red LED warning lights on platform (PR). The lights shall be switched with aerial master and located one each side on the side of ground pad brackets.	1

AERIAL LIGHTING		
6560-0002-235	Spot light 12V located left side front of platform.	1
6560-0002-236	Spot light 12V located right side front of platform.	1
6560-0005	Flood lights Unity at base (PR).	1
WATERWAY OPTIONS		
6350-0005	Rear 4" NST waterway inlet for rear mounted aerials. Includes chrome cap.	1
6350-0012-192	Akron 2.5" valve for platform. Valve to be located at the front of platform next to monitor.	1
6350-0014	2.5" chrome elbow with 2.5" x 1.5" reducer and 1.5" cap for platform / ladder discharge valve.	1
6350-0067	2.5" Innovative Controls stainless steel case pressure gauge (0-400) with color code bezel. Locate next to waterway inlet.	1
MISC AERIAL ELECTRICAL		
6570-0012	Aerial Information System (AIS) for platform.	1
BREATHING AIR		
6400-0003	Breathing air platform with (1) 444CF cylinder. Includes low air alarm.	1
SIGN PLATES		
6750-0004-000-39	Aerial sign plates 12 x 144 (PR). Available on HP78, HP100 and HP100 platform only. Does not include lettering. Color: Job Color.	1
AERIAL TESTING		
6900-0000	Aerial flow test - 3rd party.	1
6900-0002	Aerial 2009 NFPA Certification.	1
HAND TOOLS		
7600-0005	Pike Pole Fiberglass 6'.	2
7600-0006	Pike Pole Fiberglass 8'.	2
7600-0008	Pike Pole Fiberglass 12'.	2
GROUND LADDERS		
7800-0002	Alco-Lite FL-10, 10' folding ladder without shoes.	1
7800-0010	Alco-Lite PRL-16' roof ladder.	1
7800-0016	Alco-Lite PEL-24' 2-section extension ladder.	1
7800-0021	Alco-Lite PEL-28' extension ladder.	1
7800-0024	Alco-Lite PEL-35' extension ladder.	2
7800-0038	Alco-Lite PRL-20' roof ladder.	1
MISC LOOSE EQUIPMENT		
7600-0016	Wheel chocks 44" NFPA compliant, pair (PR) of Zico SAC-44. Up to 44" diameter tires. Includes mounting brackets.	4

7900-0014	DOT Required Drive Away Kit - Kit includes three (3) triangular warning reflectors with carrying case. This kit is for the end user and is to remain with the truck.	1
EXTERIOR PAINT		
8100-0071	Undercoating E-ONE.	1
8100-0084	All applicable pump/pre-connect application modules are to have a job color finish. Includes upper and lower pump modules, crosswalk module and/or speedlay/pre-connect module (as applicable). Rear mounted body/pump module to be painted job color.	1
8100-0116	Rear body surface to have a sanded finish (not painted job color). Includes hinged doors that do not have discrete sales codes and removable panels.	1
8100-0176-000-17	Paint E-ONE chassis cab - Sikkens paint. Color: FLNA3225E-1 Red.	1
8100-0183-000-17	Paint Body - Large - For Aerials, T/A Tankers/Wetsides, Rear Mounts and Rescues. Sikkens paint. Color: FLNA3225E-1 Red.	1
8100-0356	Paint lift cylinders, extension cylinders and upper turntable steelwork FLNA4006 white (does not apply to TT deck).	1
INTERIOR PAINT		
8150-0011	The interior of the cab to be painted Zolatone gray.	1
STRIPING		
8200-0016	White reflective tape on (4) outriggers.	1
8300-0002-334-12	NFPA Scotchlite Stripe - 4" wide and straight on front/sides of cab and sides/rear of body. Color: White. Location: bottom of stripe flush with top of bumper and straight back.	1
8300-0042	White rubrail scotchlite insert.	1
8300-0084-000-72	Chevron "A" style 6" printed sheet Scotchlite striping full width on rear of body. Includes rear facing extrusions, panels and doors. Colors to be Yellow/Red.	1
GRAPHICS		
8400-0022	Logo E-ONE (PR) on aerial lift cylinder. Logo to be black and white reflective material approx 14" long located midway along outward surface of cylinder.	1
WARRANTY / STANDARD & EXTENDED		
9100-0000	Standard 1 Year Warranty.	1
9100-0003	Lifetime Frame Warranty.	1
9100-0004	10 Year/100,000 Mile Structural Warranty for Alum Cab / Body - Statement of Warranty.	1
9100-0005	10 Year Stainless Steel Plumbing Warranty - Statement of Warranty.	1
9100-0007	20 Year Aerial Device Structural Warranty - Integrity Limited Warranty.	1
9100-0019	10 Year Limited Paint and Perforation Warranty - For Sikkens Paint.	1
SUPPORT, DELIVERY, INSPECTIONS AND MANUALS		
9300-0000	Vehicle familiarization aerial (Domestic).	1
9300-0009	Manuals, Operator and Service CD-ROM.	1

9300-0016	Approval Drawings-Standard.	1	
9300-0316	Fire Apparatus Safety Guide published by FAMA, latest edition.	1	
PRICE	2016 E-ONE HP100 PLATFORM - CYCLONE CUSTOM CHASSIS		$983,996

STATE OF OHIO TERM SCHEDULE

4200 SURFACE RD
COLUMBUS, OH 43228

Quote No: 57494

3/13/2015

Quote Rev:21 Drawing Rev:4

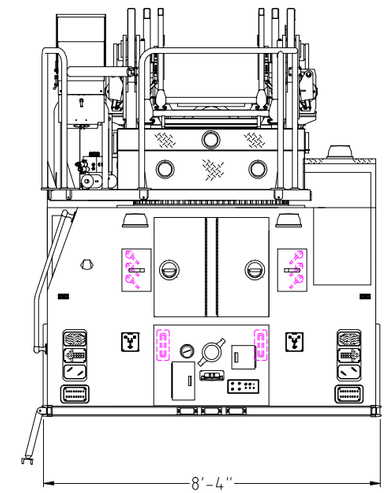

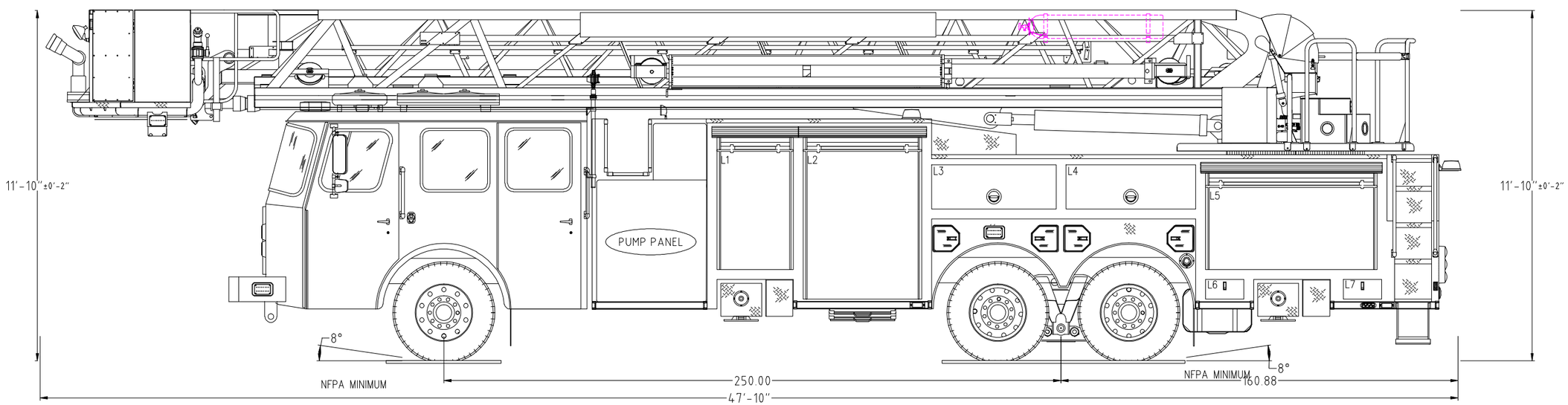

POWERED BY EZDRAW

Notice: This drawing provides a GENERAL REPRESENTATION of the vehicle configuration and should be used for evaluation purposes. The respective dimensions shown,including overall height and length, are estimates and may vary due to manufacturing processes. All other items such as lighting and fixtures, plumbing, compartmentation, and other generally assembled details are shown for REFERENCE ONLY and may not be a direct reflection of the final truck configuration. In ALL situations where this drawing may conflict with the specifications, THE SPECIFICATIONS, AS REFLECTED IN THE APPROVED SHOP ORDER, SHALL PREVAIL. Unless otherwise specified, the proposed apparatus will be manufactured to the latest NFPA recommendations as well as other applicable federally regulated safety regulations. E-One reserves the right to engineer and incorporate design improvements and changes without notice, while adhering to the intent of the specification.

1500 GPM HALE QMAXPUMP
0 TOTAL VOLUME
0 TOTAL FOAM

HOSE LOADS :

	OPENING		INTERIOR DIMENSIONS				
COMPT.	WIDTH	HEIGHT	WIDTH	LOWER HEIGHT	LOWER DEPTH	UPPER HEIGHT	UPPER DEPTH
L1	29	49	31	57	14	49	17
L2	46	61	48	69	25.5	61	17
L3	50.5	18	50.5	N/A	N/A	18	26
L4	52.5	18	52.5	N/A	N/A	18	20
L5	67.5	34.5	69.5	42.5	23	34.5	18
L6	15.5	8	15.5	8	23	N/A	N/A
L7	15	8	15	8	23	N/A	N/A
R1	29	49	31	57	14	49	16
R2	46	61	48	69	26	61	16
R3	15.5	32.5	15.5	30	23	N/A	N/A
R4	31	20.5	31	30	14	N/A	N/A
R5	36	32.5	36	30	23	N/A	N/A

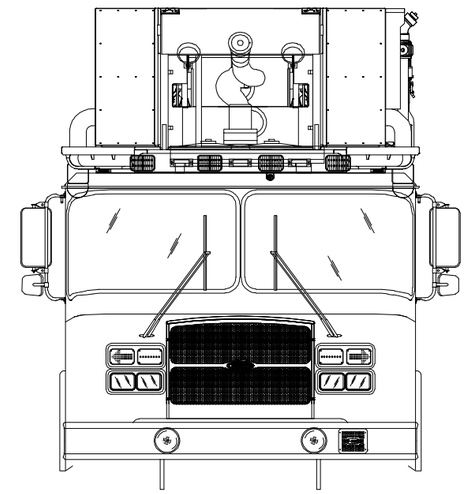

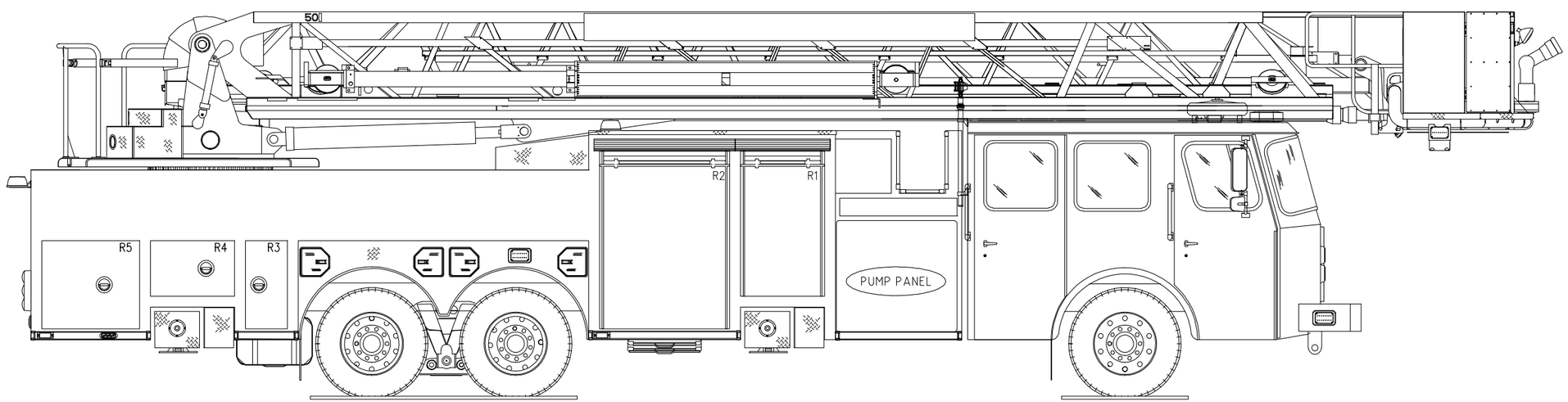

POWERED BY EZDRAW

Fire Apparatus Quotation for:
STATE OF OHIO TERM SCHEDULE

Quotation Number: 57495 Rev: 19

Unit Description: AEMM-CYC2-095P

Quote Description: Aerial Mid Mount, Cyclone II, 95 Platform

Salescode	Extended Description	Qty
TESTING COMPLIANCE STANDARD		
1001-0015	The E-ONE supplied components of the vehicle shall meet the requirements of NFPA 1901, 2009 edition.	1
BUMPERS		
1160-0000	Bumper 10" stainless steel.	1
1160-0010	1/8" Front Bumper Gravel Shield.	1
1160-0013	16" Front Bumper Gravel Shield Extension.	1
FRAME ASSEMBLY		
1250-0073	Frame - Formed torque box for HP95 Mid-Mount aerial. Includes 12" high rails below cab.	1
AXLE OPTIONS		
1025-0024	Meritor RT-58-185 rear tandem axle 60,000 lb. capacity.	1
1025-0152	Reyco Granning independent front suspension - 22,800 lb. Includes shocks and sight glass on hubs.	1
SUSPENSIONS		
1070-0030	Rear suspension FIREMAAX EX model FMX-622 air ride (60-62K) rated equal to the capacity of the axles. Requires alum wheels. Requires TB modification on 4-jack aerials. (Raises OAH .5" over springs)	1
WHEEL OPTIONS		
1050-0007	Front axle wheel trim kit. Includes stainless steel lug nut covers (chrome plated plastic if applicable) and center cap with E-ONE logo. Note: Center cap will have an inspection port IPO a logo if equipped with Stemco oil seals.	1
1050-0009	Rear axle (tandem) wheel trim kit. Includes stainless steel lug nut covers (chrome plated plastic if applicable) and center caps with E-ONE logo. E-ONE custom chassis w/steel wheels will have chrome plated plastic lug covers.	1
1050-0044	Accuride aluminum wheels for front axle (2).	1
1050-0046	Accuride aluminum wheels for rear axles (8).	1

TIRE OPTIONS		
1060-0023	Eight Michelin 315 rear tires with Mud and Snow tread	1
1060-0046	Two Michelin 425 tires model XFE for front axle.	1
1060-0119	RWC AirGuard LED tire pressure monitoring valve stem caps (10) for tandem rear axle applications.	1
BRAKE SYSTEMS		
1100-0006	Parking brake release mounted on the driver's side lower dash.	1
1100-0008	Brake system air 6X4.	1
1100-0014	ArvinMeritor 16-1/2" x 7" S-cam brakes with cast brake drums for a tandem rear axle.	1
1100-0054	Bendix SN7 17" disc brakes for front axle. Reyco Granning IFS only.	1
AIR SYSTEM OPTIONS		
1110-0000-001	Inlet for air system. Location: driver door jamb.	1
1110-0002	Air dryer Bendix AD-9.	1
1110-0006	Air lines nylon.	1
1110-0026	Air horns recessed in bumper (PR).	1
1110-0027	Isolated air tank. Includes pressure protection valve.	1
1110-0043	Auxiliary air tank to be plumbed to the following optional accessories (if equipped): Chassis air horns, brake system air outlet, air reel, light tower and or customer/dealer supplied pneumatic add-on(s).	1
ENGINES & TRANSMISSIONS		
1200-0017	Push-button transmission shift selector.	1
1200-0021	TransSynd synthetic transmission fluid for EVS 4000.	1
1200-0096	Electronic speed limiting set at 60 MPH.	1
1200-0239	Eng/Trans Cummins ISX12 500HP with EVS4000 transmission. 2013 EPA Compliant.	1
SECONDARY BRAKING		
1125-0002	Jacobs engine compression brake.	1
1125-0023	Transmission to seek second gear when Jacobs engine brake or Telma retarder is engaged. N/A with Trans retarder.	1
COOLING PACKAGE		
1800-0013	Cooling system for use with Cyclone II X, Typhoon X, and Quest chassis. For use with 2010/2013 EPA engines. Includes coolant recovery system.	1
FUEL SYSTEMS		
1350-0001	Dual fuel fill package. Additional fuel fill provided on officer side of unit.	1
1350-0005	Fuel system 65 gallons.	1
1350-0012-670	Fuel shut-off valve. Location: one (1) inlet side of OEM fuel filter.	1

1350-0022	Fuel line hose rubber.	1
ALTERNATOR		
1700-0005	Alternator Leece Neville 320 amp. 320 amp SAE/275 amp NFPA.	1
BATTERIES		
1400-0002	Battery four group 31 1000 CCA.	1
CHASSIS OPTIONS		
1680-0005	Thermatic fan clutch.	1
1680-0007	Drivelines 1810. Required on 1550 lb/ft torque or greater engines.	1
1680-0008	Tow eyes front painted below bumper/cab (PR).	1
1680-0012	Tow eyes rear frame painted.	1
1680-0017	Hotshift PTO.	1
1680-0188	Aerial hydraulics installed on bottom port of EVS4000 transmission (to allow for flat rear cab floor). Requires drive through hyd pump option (6150-0015) on aerials with hyd generator (10 kw max).	1
1680-0250-M58	Diesel Exhaust Fluid (DEF) 5 gallon tank for 2013 EPA engines. Location: left side below rear of cab.	1
1680-0284	Radiator mounted power steering cooler.	1
CAB MODEL		
1520-0008	Cyclone II X medium cab with 58" CA	1
CAB ROOF TYPE		
1615-0010	Cab roof to be "flat" (non-vista).	1
CAB BADGE PACKAGE		
1610-0000	Cab and body to have applicable E-ONE logos.	1
CAB DOOR OPTIONS		
1550-0003	Rear crew cab doors in the medium position.	1
1550-0005	Driver and officer cab door windows. Include forward vent windows.	1
1550-0011	Rear crew cab door windows. Includes manual roll-down actuation. Not available on Typhoon or CII with paddle style door latching.	1
1550-0016	Cab door panels ABS.	1
1550-0025	All cab doors shall have "L" style exterior latches.	1
1550-0027	Front cab door windows to have manual actuation.	1
1550-0038-659	(4) LED cab step area lighting. Locate each light on each cab door in the inboard position. Lights to be switched with door ajar.	1
1550-0044	All cab door kick plates to be made from diamond plate aluminum.	1
1550-0059-000-G6	Reflective Red/Lemon Yellow printed striping positioned in the "A" formation located on the cab door panels.	1

1550-0077	Interior cab door locks - manual. Will have manual actuation from each respective door. Includes barrel style key lock on each exterior cab door.	1
1550-0084	All cab exterior access doors to have 1250 keyed locks.	1
CAB STEP OPTIONS		
1640-0000-158	Step below cab door. Located driver's front door. Steps under front cab doors shall not interfere with approach angle.	1
1640-0000-159	Step below cab door. Located officer's front door. Steps under front cab doors shall not interfere with approach angle.	1
1640-0000-160	Step below cab door. Located driver's rear door. Steps under front cab doors shall not interfere with approach angle.	1
1640-0000-161	Step below cab door. Located officer's rear door. Steps under front cab doors shall not interfere with approach angle.	1
MIRRORS		
1670-0003	Velvac 2010 mirrors. Door mounted west coast style with remote control and heat.	1
MISC EXTERIOR CAB OPTIONS		
1550-0020	Windows cab side fixed driver's side.	1
1550-0033	Windows cab side fixed officer's side.	1
1675-0022	Pair of 18" handrails located just behind driver and officer front door one each side.	1
1675-0024	Pair of 36" handrails located just behind driver and officer rear door (ALS doors if equipped) one each side.	1
1675-0030	Mud flaps, front, black with E-ONE logo.	1
1675-0047	Rear cab wall to be 3/16" aluminum diamond plate.	1
1675-0201	Large radius cab wheel well. Includes bolt-on ajustable wheel well trim.	1
1675-0202	Mounting plate for battery charger receptacle, indicator and air inlet (if applicable). Plate to be removable brushed stainless steel.	1
HVAC		
1515-0018	Air conditioning for the Typhoon X, CII X and Quest with roof top mounted condenser.	1
1515-0053	Controls for heating and air conditioning shall be located in the center dash area. (Lower area on Typhoon and CII with severe duty dash)	1
1685-0057	Heaters cab rear with covers (PR), and front heater with heat to the feet for the driver and officer.	1
SEATS		
1510-0003	Seats, Inc. brand 911 cab seats.	1
1510-0007	Seat cover material vinyl.	1
1510-0008	Seat color gray.	1
1510-0035-147	Universal air pack bottle bracket (EA). Location: officer's seat.	1

1510-0035-148	Universal air pack bottle bracket (EA). Location: rear facing driver's side.	1
1510-0035-151	Universal air pack bottle bracket (EA). Location: inboard driver's side rear wall.	1
1510-0035-152	Universal air pack bottle bracket (EA). Location: inboard officer's side rear wall.	1
1510-0035-215	Universal air pack bottle bracket (EA). Location: rear facing officer's side.	1
1510-0038	Driver seat 911 air ride.	1
1510-0042	Officer seat to be 911 fixed SCBA.	1
1510-0050	Rear facing 911 seat with SCBA driver's side.	1
1510-0053	Rear facing 911 seat with SCBA officer's side.	1
1510-0062	Two man bench centered on rear wall with 911 SCBA backs. Includes angled corners.	1
1685-0033	Seating capacity tag of six occupants.	1
MISC INTERIOR CAB OPTIONS		
1685-0000	Cab interior gray. Does not include engine cover or seat color.	1
1685-0005	Lexan sun visors, driver and officer's side overhead.	1
1685-0168	ABS Dash package. Includes center and officer side dash, lower kick panels and "A" post covers.	1
1685-0187	Severe duty engine cover, molded polyurethane.	1
CAB ELECTRICAL OPTIONS		
1750-0013-172	Turn signal Whelen 600 LED amber arrow pair located upper headlight bezel.	1
1750-0024-179-04	Auto-Eject receptacle inlet 20 amp located outside driver's door next to handrail with a Yellow cover.	1
1750-0029	Switch horn button two position DOT/air horn.	1
1750-0046-195	Cab Headlights. Position: lower.	1
1750-0072-593	12 VDC (or 24VDC) electrical outlet in the cab wired battery hot. Location: officer side dash.	2
1750-0075	English dominant main cab gauge cluster.	1
1750-0158	Dome Lts Red/White LED. Package includes two lights mounted in the front and two mounted in the rear of the cab. White light wired through door and light assembly switch. Red light through light assembly switch.	1
1750-0188	DPF regeneration override switch.	1
1750-0198-A31	Battery charger to be located behind driver's seat.	1
1750-0343	Battery charger E-ONE LPC 20. 120 volt inlet, 20 amp output.	1
1750-0435	Halogen cab headlights. TyphoonX, CIIX and QST2 only.	1
BODY MODEL		
3080-0034	HP95 MidMount center body with pump and 300g tank.	1
3080-0041	HP95 MidMount rear body with hosebed.	1
3080-0147	HP95 MidMount front body with pump (for use with DPF / SCR aftertreatment).	1

BODY COMPT REAR		
3110-0058	Rear of body to have flush un-painted smooth plate body panels to facilitate rear body striping.	1
AERIAL BODY OPTIONS		
3310-0032	Recessed tubes for (6) pike poles. Not available on HP75 SideStacker.	1
3310-0037	Rear ladder tunnel doors. Vertically hinged diamond plate.	1
3310-0058	Crosslay triple 5.5" wide single stack to hold up to (2) 200' of 2.0" DJ (each) and up to 200' 2.5" DJ.	1
3310-0161	Jack leg opening covers diamond plate (2) sets. Includes diamond plate outrigger covers and fixed diamond plate filler panels.	1
3310-0311	Auxiliary jack pads 24X24 (4) with 20 degree formed handle. Includes mounting brackets to store (2) each side of the body next to front drop down jacks.	1
DOORS		
3300-0007-003	Door single vertical hinged painted. Location(s): L1	1
3300-0007-004	Door single vertical hinged painted. Location(s): L2	1
3300-0007-015	Door single vertical hinged painted. Location(s): R1	1
3300-0007-016	Door single vertical hinged painted. Location(s): R2	1
3300-0007-018	Door single vertical hinged painted. Location(s): R4	1
3300-0011-005	Door single horizontal hinged lift-up box pan configuration painted. Location(s): L3	1
3300-0164-007	Door double vertical hinged w/rotary latches - painted . Location(s): L5	1
3300-0164-017	Door double vertical hinged w/rotary latches - painted . Location(s): R3	1
3300-0164-019	Door double vertical hinged w/rotary latches - painted . Location(s): R5	1
3300-0167-006	Door double 3-point vertical hinged w/rotary latches - painted. Location(s): L4	1
SHELVES		
3370-0052-079	Adjustable shelf (J-Style) for non-transverse compartments 16" or greater in depth. Location: L4 lower.	1
3370-0052-081	Adjustable shelf (J-Style) for non-transverse compartments 16" or greater in depth. Location: L5 lower.	1
3370-0053-015	Adjustable shelf (C-Style) for non-transverse compartments up to 15.99" in depth. Location: R1.	1
3370-0053-016	Adjustable shelf (C-Style) for non-transverse compartments up to 15.99" in depth. Location: R2.	1
3370-0054-079	Tracks for adjustable shelf and/or adjustable tray in compartments 16" or greater in depth. Location: L4 lower.	1
3370-0054-081	Tracks for adjustable shelf and/or adjustable tray in compartments 16" or greater in depth. Location: L5 lower.	1
3370-0055-015	Tracks for adjustable shelf in shallow compartments up to 15.99" deep. Location: R1.	1

3370-0055-016	Tracks for adjustable shelf in shallow compartments up to 15.99" deep. Location: R2.	1
COVERS		
3305-0007-000-02	Vinyl Red hose bed cover with attached rear flap(s).	1
3305-0008-000-02	Vinyl Red crosslay cover with attached side flaps.	1
PUMP PANELS		
3134-0012	Officer side upper pump access panel to be horizontal hinged with diamond plate door. Includes (2) push button latches and (2) hold open devices.	1
3134-0016	Stainless steel driver and officer side pump panels.	1
3134-0039	The gauge panel on the driver side pump panel is to be hinged upward. Includes two spring type hold opens, two trigger latches, and a recessed handle.	1
MISC PUMP PANEL OPTIONS		
4460-0003	Pump panel tags color coded per NFPA compliance.	1
WATER TANK		
4010-0195	300 gallon "T" water tank. UPF Poly III blue fill tower.	1
TANK PLUMBING		
4450-0010	2" tank fill Akron manual valve.	1
4450-0023	3" Tank to Pump Akron Air Actuated Valve	1
LADDER STORAGE / RACKS		
3365-0036-603	Center mounted ladder tunnel. Ladder rack to hold: PEL3-35, PEL-24, (2)PRL-16, PRL-14 and FL-10	1
HANDRAILS / STEPS		
3330-0002-050	Slide-out platform, rollerless. Includes chrome grab handle centered on the front face of the platform (includes hand rail as applicable). Located below driver side pump panel.	1
MISC BODY OPTIONS		
3090-0001	Hose bed capacity aerial. Provide standard size hose bed.	1
3090-0002	OAH. Unit has no overall height restrictions.	1
3090-0004	OAL. Unit has no overall length restrictions.	1
3340-0059	Recessed fuel fills for dual fuel fill application, (1) each side in rear wheel wells.	1
3340-0093	Mud flaps, rear, black with E-ONE logo.	1
3340-0107	Diamond plate tandem axle wheel well. Includes bolt-on composite wheel well liners and fenderettes.	1
3340-0270	The painted aerial body side panels shall be smooth / flush. Applies to SideStacker HB side, panels next to water tank on MM, and upper body sides on RLP.	1
3340-0478	Insulation shall be installed behind and / or below the body to protect the	1

	compartment(s) from excessive exhaust system heat.	
SCBA BOTTLE STORAGE		
3320-0009	SCBA Bottle Storage. (8) Cast Product SCBA bottle storage with gasketed doors. (4) each side in rear wheel well area.	1
3320-0100	Strap(s), loop style to retain SCBA bottle(s). Locate one per bottle in each exterior storage compartment.	8
PUMPS		
4005-0012	Hale 8FGR 1500-2000 GPM Pump single stage	1
4005-0033	Rating 2000 GPM	1
PUMP CERTIFICATION		
4475-0000	Pump certification 750-2250 GPM	1
PUMP OPTIONS		
4015-0008	Zinc anodes for Hale pump (PR), (1) discharge side and (1) intake side.	1
4015-0052-198	Steamers to be Flush. Location: driver's side.	1
4015-0052-199	Steamers to be Flush. Location: officer's side.	1
4015-0073	Manual operated master pump drain. The master drain shall be clearly marked and placed in accessible location rearward below running board on driver side or L1 compartment.	1
4015-0210	Pump cooler with Innovative Control 1/4 turn valve with "T" handle and label.	1
INTAKES		
4440-0005	2.5" Left Intake Akron Manual Valve.	1
INTAKE OPTIONS		
4445-0009	Intake relief valve, Akron.	1
DISCHARGES AND PRECONNECTS		
4415-0012-654	1.5" crosslay with Akron manual valve. Location: crosslay 1 & 2.	2
4415-0014-581	2.5" Left Pump Panel Discharge Akron Manual Valve. Location: left side discharge 1.	1
4415-0014-582	2.5" Left Pump Panel Discharge Akron Manual Valve. Location: left side discharge 2.	1
4415-0016-584	2.5" Right Pump Panel Discharge Akron Manual Valve. Location: right side discharge 2.	1
4415-0054-583	4" Right Pump Panel Discharge with 3" Akron Manual Valve (Waterous pumps noted location to be forward lower port). Location: right side discharge 1.	1
4415-0058-655	2.5" Crosslay Akron Manual Valve. Location: crosslay 3.	1
4415-0994	4" waterway discharge with 4" Akron electric valve with 9323 controller.	1
DISCHARGE OPTIONS		
4417-0176	Innovative Controls 3/4" bleeder/drain valve include lift lever with ergonomic grip.	8

4417-0185	Innovative Controls discharge and intake bezels with integral color code and verbiage for side mount pump panel.	1
PRESSURE GOVERNORS		
4465-0011	Class 1 TPG pressure governor. Includes, water, oil, volt and tachometer.	1
GAUGES		
4435-0001	Class 1 Intelli-Tank water tank level gauge. On pump panel.	1
4435-0246	2.5" Innovative Controls stainless steel case pressure gauge (0-400) with color code bezel.	8
4435-0247	4" Innovative Controls stainless steel case master pressure gauges with bezel. Intake 30-0-400, and discharge 0-400.	1
ELECTRICAL SYSTEMS		
5010-0013-Y83	Vehicle data recorder - 2009 NFPA compliant. Includes occupant detection with display. Display location: inboard on driver's side overhead console.	1
5010-0039	V-MUX Electrical system for aerials.	1
5010-0059-339	VFD Text display for V-MUX electrical system. Location: center of dash.	1
LIGHT BARS		
5300-0055	Light bar Whelen Freedom model FN72QLED 72" LED with MKEZ7 mounts and clear lenses. Location: Centered on the front cab roof.	1
WARNING LIGHT PACKAGES		
5550-0059-538	Whelen Super LED lower level warning light package. Includes (8) red 600 LED light heads and (2) red 500 LED light heads w/chrome flanges. Locate side facing lights: at forward most position, in rear wheel well offset to front, and side facing at rear of body in rubrail if equipped.	1
WARNING LIGHTS		
5600-0078-479-06	Whelen Super LED beacon (PR) model L31H with Red domes. Location rear upper body on aerial style brackets.	1
5600-0105-170	Hazard (door ajar) light 2" LED. Location: center overhead.	1
SIRENS		
5500-0015	Whelen model 295SLSA1 siren with microphone (replaced 295HFSA1).	1
5500-0024-170	The electronic siren control is to be located on the center overhead.	1
SPEAKERS		
5510-0029-209	Speaker, Federal Signal Dynamax ES100 with "E-ONE" grille through bumper. Location: driver side front bumper.	1
DOT LIGHTING		
5150-0006	Whelen 600 series LED horizontal mount tail lights. Includes LED stop/tail, arrow turn and halogen back-up lights with horizontal Cast 3 housing and weatherproof connectors.	1

5150-0017	License plate light LED with chrome housing located at the rear of the body.	1
5150-0026	Marker light LED body/cab package. E-ONE custom cab with aerial ladder, Mid-Mount platform or Bronto bodies only.	1
5150-0039	Marker lights Britax amber/red rubber housed mounted on the rear body corners angled down.	1
5150-0080-462	Weldon auxiliary turn signal model 9186-8580 LED (PR). Location: (1) each side in center of rear tandem wheel well.	1
LIGHTS - COMPARTMENT, STEP & GROUND		
5380-0032	Ground light package LED - large.	1
5380-0033	Step light package body - small.	1
5380-0136	Compartment light package Amdor Luma-Bar LED for large bodies. Includes one light per compartment (two if transverse).	1
LIGHTS - DECK AND SCENE		
5390-0007	Deck/scene light circuit wiring through chassis reverse. Requires rear deck or scene light.	1
5390-0058-457	Deck Lights - Truck-Lite LED model 81380 (PR). Location: (1) each side of body rear facing up high.	1
5390-0076	Hose bed light Truck-Lite LED model 81380. Locate at front of hose bed. Switched with work light switch in cab.	1
5390-0102	Crosslay light Truck-Lite LED model 81380. Locate to rear of crosslay (SM) and forward of crosslay (TM as applicable). Switched with work light switch in cab.	1
LIGHTS - NON-WARNING		
5400-0003	Engine compartment light (EA).	1
5400-0010	Incandescent pump compartment light (EA).	1
5400-0054	Spotlight Specialty 2150 hand held located on officer's side of cab dash w/12V receptacle.	1
5400-0110	Weldon pump panel light LED package - RLP/MM. Includes (2) lights per side pump panel and (2) lights for angled upper control panel.	1
CONTROLS / SWITCHES		
5100-0000-199	Foot switch to control air horns located officer's side.	1
5100-0007-198	Foot switch to control electronic siren located driver's side.	1
CAMERAS / INTERCOM		
6570-0008	Intercom aerial 2-way. Atkinson Dynamics (Federal). Speaker to be located to rear of platform on Bronto units.	1
MISC ELECTRICAL		
1750-0082-762	12V power distribution module. Includes (6) battery hot and (6) switched hot circuits. 100 amps max (IATS). Location: behind officer's seat.	1
5110-0017	Back-up alarm 97 dB.	1
AERIAL MODEL		

6100-0008	Platform HP95 Mid-Mount. Includes driver side roll top console, level assist and jack leg flood lights.	1
AERIAL HYDRAULIC SYSTEM OPTIONS		
6150-0003-216	Gauge aerial hydraulic oil level. Electronic display to be located on pump operator's panel.	1
MONITORS		
6300-0007	Monitor Akron electric 1250GPM for platform. Includes tip controls, base controls and butterfly valve.	1
6300-0017	Monitor painted silver from OEM.	1
AERIAL WARNING LIGHTS		
6550-0001	Outrigger warning lights (PR) LED. Truck-Lite model 91R.	1
AERIAL LIGHTING		
6560-0002-235	Spot light 12V located left side front of platform.	1
6560-0002-236	Spot light 12V located right side front of platform.	1
6560-0005	Flood lights Unity at base (PR).	1
WATERWAY OPTIONS		
6350-0009	Right side 4" NST waterway inlet for Mid-Mount Boom or Platform. Includes chrome cap.	1
6350-0012-192	Akron 2.5" valve for platform. Valve to be located at the front of platform next to monitor.	1
6350-0014	2.5" chrome elbow with 2.5" x 1.5" reducer and 1.5" cap for platform / ladder discharge valve.	1
6350-0067	2.5" Innovative Controls stainless steel case pressure gauge (0-400) with color code bezel. Locate next to waterway inlet.	1
MISC AERIAL ELECTRICAL		
6570-0012	Aerial Information System (AIS) for platform.	1
BREATHING AIR		
6400-0003	Breathing air platform with (1) 444CF cylinder. Includes low air alarm.	1
AERIAL EQUIPMENT		
6500-0011-138	Pike pole tube for 6' pole on ladder. Location: left side fly section.	1
6500-0019-266	Axe bracket mounted on aerial. For use with a 6 lb. axe only. Location: right side inside of platform.	1
SIGN PLATES		
6750-0001-000-39	Aerial sign plates 16 x 144 (PR). Available on HP100L, HPS105L, HP95 and HP100P only. Does not include lettering. Color: Job Color	1
AERIAL TESTING		
6900-0000	Aerial flow test - 3rd party.	1

6900-0002	Aerial 2009 NFPA Certification.	1
ELBOWS		
7400-0004	Elbow 30 degree chrome swivel w/2.5"FNST x 2.5"MNST.	3
HAND TOOLS		
7600-0005	Pike Pole Fiberglass 6'.	2
7600-0006	Pike Pole Fiberglass 8'.	2
7600-0008	Pike Pole Fiberglass 12'.	2
GROUND LADDERS		
7800-0007	Alco-Lite PRL-14' roof ladder.	1
7800-0010	Alco-Lite PRL-16' roof ladder.	2
7800-0016	Alco-Lite PEL-24' 2-section extension ladder.	1
7800-0023	Alco-Lite PEL3-35' 3-section extension ladder.	1
7800-0032	Alco-Lite FL-10, 10' folding ladder w/safety shoes.	1
MISC LOOSE EQUIPMENT		
7600-0016	Wheel chocks 44" NFPA compliant, pair (PR) of Zico SAC-44. Up to 44" diameter tires. Includes mounting brackets.	4
7900-0014	DOT Required Drive Away Kit - Kit includes three (3) triangular warning reflectors with carrying case. This kit is for the end user and is to remain with the truck.	1
EXTERIOR PAINT		
8100-0071	Undercoating E-ONE.	1
8100-0116	Rear body surface to have a sanded finish (not painted job color). Includes hinged doors that do not have discrete sales codes and removable panels.	1
8100-0176-000-17	Paint E-ONE chassis cab - Sikkens paint. Color: FLNA3225E-1 Red.	1
8100-0183-000-17	Paint Body - Large - For Aerials, T/A Tankers/Wetsides, Rear Mounts and Rescues. Sikkens paint. Color: FLNA3225E-1 Red.	1
8100-0356	Paint lift cylinders, extension cylinders and upper turntable steelwork FLNA4006 white (does not apply to TT deck).	1
INTERIOR PAINT		
8150-0011	The interior of the cab to be painted Zolatone gray.	1
STRIPING		
8200-0015	White reflective tape on (2) outriggers.	1
8300-0002-334-12	NFPA Scotchlite Stripe - 4" wide and straight on front/sides of cab and sides/rear of body. Color: White. Location: bottom of stripe flush with top of bumper and straight back.	1
8300-0042	White rubrail scotchlite insert.	1
8300-0084-000-72	Chevron "A" style 6" printed sheet Scotchlite striping full width on rear of body. Includes rear facing extrusions, panels and doors. Colors to be Yellow/Red.	1

GRAPHICS			
8400-0022	Logo E-ONE (PR) on aerial lift cylinder. Logo to be black and white reflective material approx 14" long located midway along outward surface of cylinder.	1	
WARRANTY / STANDARD & EXTENDED			
9100-0000	Standard 1 Year Warranty.	1	
9100-0003	Lifetime Frame Warranty.	1	
9100-0004	10 Year/100,000 Mile Structural Warranty for Alum Cab / Body - Statement of Warranty.	1	
9100-0005	10 Year Stainless Steel Plumbing Warranty - Statement of Warranty.	1	
9100-0007	20 Year Aerial Device Structural Warranty - Integrity Limited Warranty.	1	
9100-0019	10 Year Limited Paint and Perforation Warranty - For Sikkens Paint.	1	
SUPPORT, DELIVERY, INSPECTIONS AND MANUALS			
9300-0000	Vehicle familiarization aerial (Domestic).	1	
9300-0009	Manuals, Operator and Service CD-ROM.	1	
9300-0016	Approval Drawings-Standard.	1	
9300-0316	Fire Apparatus Safety Guide published by FAMA, latest edition.	1	
PRICE	2016 E-ONE MM95 PLATFORM - CYCLONE CUSTOM CHASSIS		$999,875

STATE OF OHIO TERM SCHEDULE

4200 SURFACE RD
COLUMBUS, OH 43228

Quote No: 57495

3/13/2015

Quote Rev:19 Drawing Rev:4

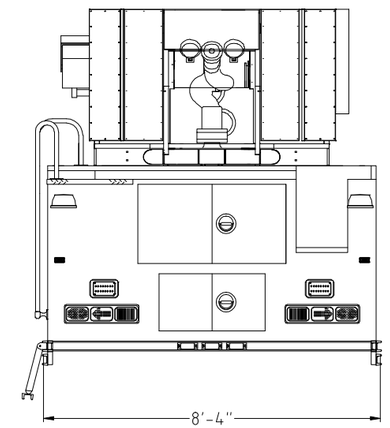

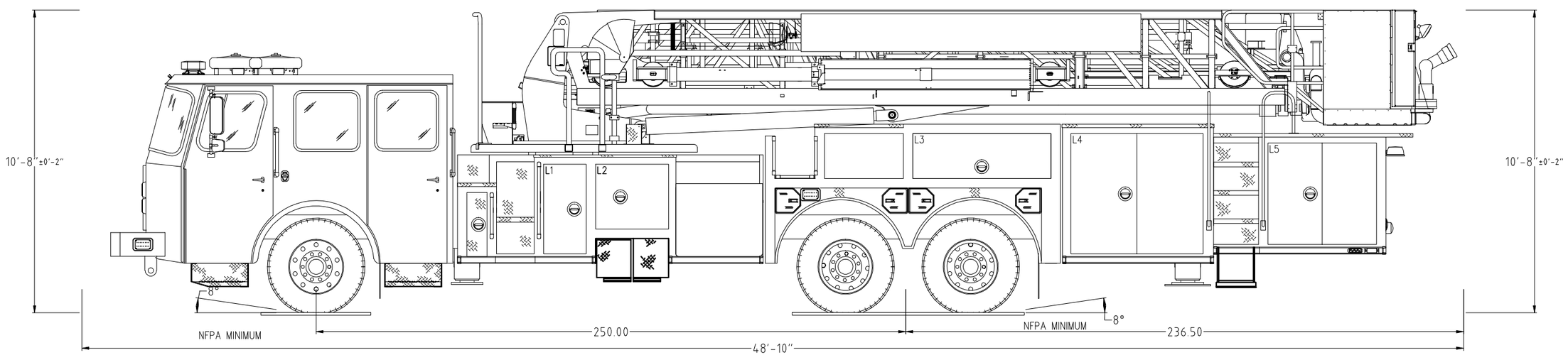

POWERED BY EZDRAW

Notice: This drawing provides a GENERAL REPRESENTATION of the vehicle configuration and should be used for evaluation purposes. The respective dimensions shown,including overall height and length, are estimates and may vary due to manufacturing processes. All other items such as lighting and fixtures, plumbing, compartmentation, and other generally assembled details are shown for REFERENCE ONLY and may not be a direct reflection of the final truck configuration. In ALL situations where this drawing may conflict with the specifications, THE SPECIFICATIONS, AS REFLECTED IN THE APPROVED SHOP ORDER, SHALL PREVAIL. Unless otherwise specified, the proposed apparatus will be manufactured to the latest NFPA recommendations as well as other applicable federally regulated safety regulations. E-One reserves the right to engineer and incorporate design improvements and changes without notice, while adhering to the intent of the specification.

2000 GPM PUMP
0 TOTAL VOLUME
0 TOTAL FOAM

HOSE LOADS :

	OPENING		INTERIOR DIMENSIONS				
COMPT.	WIDTH	HEIGHT	WIDTH	LOWER HEIGHT	LOWER DEPTH	UPPER HEIGHT	UPPER DEPTH
L1	18	38	18	N/A	N/A	N/A	N/A
L2	31	27.5	31	N/A	N/A	27.5	3
L3	58.5	19	58.5	N/A	N/A	19	25
L4	56	51	56	30	26	21	22
L5	46	43	46	30	26	13	22
R1	18	38	18	N/A	N/A	38	20
R2	31	27.5	31	N/A	N/A	27.5	3
R3	56	28.13	56	30	26	-1.87	21
R4	19	24	19	30	26	-6	21
R5	46	24	46	30	26	-6	21

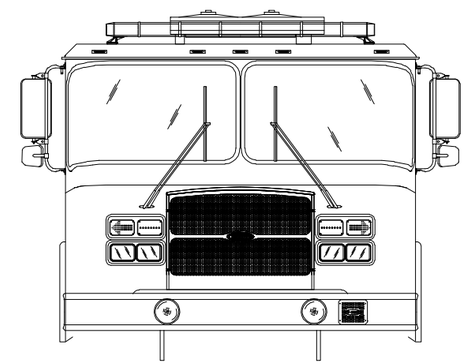

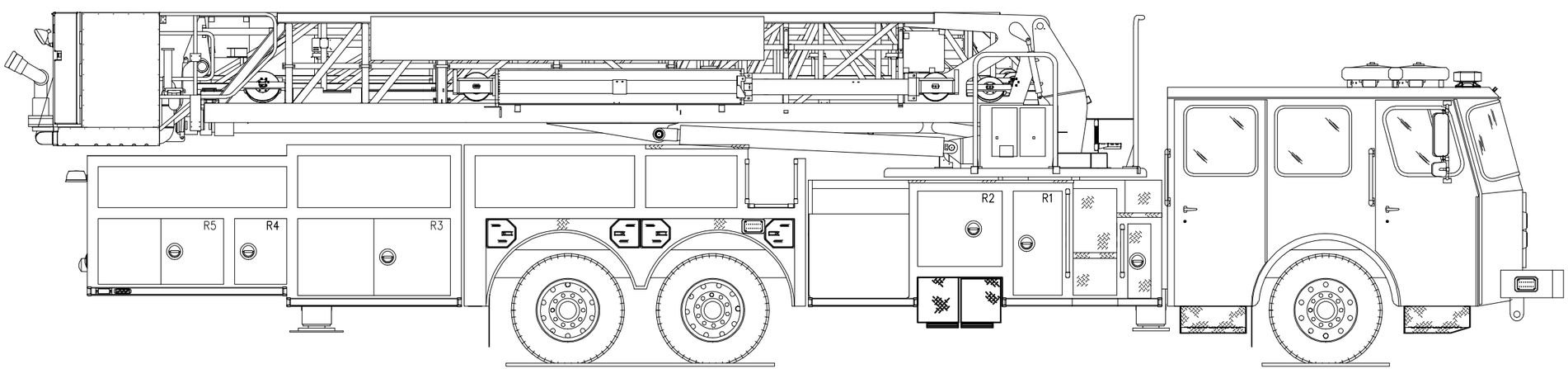

POWERED BY EZDRAW

E-ONE OHIO STATE TERM SCHEDULE 2016 OPTIONS PRICE BOOK
AERIALS - CUSTOM CHASSIS

1000	Custom Chassis	
1020-0036	Gates Green Stripe hose IPOS (silicone hose) shall be used for all heater applications within the cab.	$114
1025-0002	Dana 22I 22,800 lb. front axle.	$18,584
1025-0004	Meritor FL941 front axle 18,000 lb.	$11,233
1025-0005	Meritor FL-941 front axle 18,700 lb.	$16,845
1025-0006	Meritor FL941 front axle 20,000 lbs.	$17,454
1025-0007	Meritor FL941 front axle 21,000lb	$17,454
1025-0009	Meritor FL943 front axle 18,000 lbs.	$13,672
1025-0010	Meritor FL-943 front axle 18,700 lb.	$17,698
1025-0011	Meritor FL-943 front axle 20,000 lb.	$18,432
1025-0012	Meritor FL-943 front axle 21,000 lb.	$18,673
1025-0013	Meritor FL-943 front axle 21,500 lbs.	$19,041
1025-0017	Meritor RS-25-160 single rear axle 27,000 lb. capacity.	$12,573
1025-0018	Meritor RS-30-185 single rear axle 31,000 lb. capacity.	$14,038
1025-0019	Meritor RT-40-145 rear tandem axle 40,000 lb. capacity.	$25,629
1025-0020	Meritor RT-46-160 rear tandem axle 46,000 lb. capacity.	$29,901
1025-0021	Meritor RT-46-160 rear tandem axle 48,000 lb. capacity.	$29,901
1025-0022	Meritor RT-50-160 rear tandem axle 52,000 lb. capacity.	$37,833
1025-0023	Meritor RT-50-160 rear tandem axle 54,000 lb. capacity.	$37,833
1025-0024	Meritor RT-58-185 rear tandem axle 60,000 lb. capacity.	$47,597
1025-0027	Driver controlled rear differential.	$802
1025-0028	Koni shock absorbers for front axle - adjustable.	$348
1025-0029	Front shock absorbers.	$187
1025-0030	Stemco oil seal front axle. Chicago Rawhide seal with Stemco sight glass will be supplied when front disc brakes are selected.	$113
1025-0031	Spiral pins front suspension.	$1,739
1025-0034	Automatic traction control. In addition to standard ABS system.	$601
1025-0035	Koni shock absorbers for rear axle.	$552
1025-0036	Automatic Traction Control System 6x4/6x6	$2,049
1025-0038	Meritor RT-58-185 rear tandem axle 62,000 lb. capacity.	$56,139
1025-0039	Rear steer axle FL941 21,500lb for tiller.	$25,050
1025-0060	Meritor FL-943 front axle 22,100 lb.	$19,755
1025-0073	Meritor RS-30-185 single rear axle 31,500 lb. capacity.	$14,038
1025-0077	Rear steer axle FL941 22,100lb for tiller. Requires 445 tires.	$25,050
1025-0078	S-Cam brakes to have Haldex brand slack adjusters (per axle).	$318
1025-0081	Chicago Rawhide oil seal rear axle (per axle). Not available with disc brakes.	$241
1025-0086	Meritor FL941 front axle 18,500lb.	$16,845
1025-0087	Dana S35-590 single rear axle 32,500lb capacity. Requires Bendix rear brakes.	$17,859
1025-0088	Synthetic 75w90 gear oil for rear axle.	$381
1025-0090	Meritor RT-46-160 rear tandem axle rated at 40,000lb capacity.	$29,901
1025-0097	Meritor RS-30-185 single rear axle 33,000 lb. capacity. Requires 16.5" x 8.625" cast shoe brakes and 33K suspension.	$14,038
1025-0107	Synthetic 75w90 gear oil for front axle.	$118
1025-0110	Meritor RT-50-160 rear tandem axle 50,000lb capacity	$37,833
1025-0114	Meritor FL943 front axle 18,700lb with multi-leaf front springs.	$18,115
1025-0120	Driver controlled rear differential. Includes guarded toggle switch located on driver side diagnostic panel.	$802
1025-0124	Meritor FL943 front axle 20,000 lb. Springs to have Berlin style eyes with rubber bushings.	$18,743
1025-0125	Meritor FL943 front axle 19,840 lb.	$17,698
1025-0127	Meritor FL941 front axle 18,000 lb with multi-leaf front springs.	$11,639
1025-0132	Koni shock absorbers for front axle - non-adjustable. For use with IFS front axle only.	$348
1025-0133	Meritor FL943 front axle 20,000 lb with multi-leaf front springs.	$18,838
1025-0134	Meritor MT-40-14X rear tandem axle 40,000 lb. capacity.	$25,629
1025-0135	AxleTech FS25 front axle 18,700 lb. Includes sight guage.	$18,739
1025-0137	Meritor FL943 front axle 19,220 lb.	$17,698
1025-0138	AxleTech FS25 front axle 20,000 lb. Includes sight guage.	$18,739
1025-0142	Chicago oil seal front axle. Chicago Rawhide seal with Chicago Rawhide sight glass (model 1743) will be supplied when front disc brakes are selected.	$113
1025-0147	Reyco Granning independent front suspension - 18,700 lb. Includes shocks and sight glass on hubs.	$30,032
1025-0148	Reyco Granning independent front suspension - 19,840 lb. Includes shocks and sight glass on hubs.	$30,032
1025-0149	Reyco Granning independent front suspension - 20,000 lb. Includes shocks and sight glass on hubs.	$30,032
1025-0150	Reyco Granning independent front suspension - 21,000 lb. Includes shocks and sight glass on hubs.	$30,032
1025-0151	Reyco Granning independent front suspension - 21,500 lb. Includes shocks and sight glass on hubs.	$30,032
1025-0152	Reyco Granning independent front suspension - 22,800 lb. Includes shocks and sight glass on hubs.	$30,032

1025-0153	Reyco Granning independent front suspension - 24,000 lb. Includes shocks and sight glass on hubs.	$30,032
1025-0156	Bilstein nitrogen shock absorbers for front axle.	$522
1025-0157	Bilstein nitrogen shock absorbers for tandem rear axle.	$1,657
1025-0158	Stemco sight glass guards.	$97
1025-0163	Rear axle high water ventilation tube.	$221
1025-0165	Meritor FL-943 front axle 22,500 lb.	$19,714
1050-0000	Steel wheels for front axle (2).	$329
1050-0001	Alcoa aluminum wheels for front axle (2).	$1,775
1050-0002	Steel wheels for rear axle (4).	$652
1050-0003	Alcoa aluminum wheels for rear axle (4).	$3,545
1050-0004	Steel wheels for rear axles (8).	$1,302
1050-0005	Alcoa aluminum wheels for rear axles (8).	$7,087
1050-0007	Front axle wheel trim kit. Includes stainless steel lug nut covers (chrome plated plastic if applicable) and center cap with E-ONE logo. Note: Center cap will have an inspection port IPO a logo if equipped with Stemco oil seals.	$238
1050-0008	Rear axle (single) wheel trim kit. Includes stainless steel lug nut covers (chrome plated plastic if applicable) and center cap with E-ONE logo. E-ONE custom chassis w/steel wheels will have chrome plated plastic lug covers.	$293
1050-0009	Rear axle (tandem) wheel trim kit. Includes stainless steel lug nut covers (chrome plated plastic if applicable) and center caps with E-ONE logo. E-ONE custom chassis w/steel wheels will have chrome plated plastic lug covers.	$652
1050-0017	Each inside wheel of the single rear axle shall have valve stem extensions.	$120
1050-0018	Each inside wheel of the tandem rear axles shall have valve stem extensions.	$236
1050-0019	Two steel wheels painted job color on both the inside and outside facing for front axle.	$632
1050-0026	Front axle Wheel Trim kit. Includes stainless steel lug nut covers and center cap (no logo). Note: Center cap will have an inspection port if equipped with Stemco oil seals.	$238
1050-0027	Rear axle (single) wheel trim kit. Includes stainless steel lug nut covers (chrome plated plastic if applicable) and center caps (no logo). E-ONE custom chassis w/ steel wheels will have chrome plated plastic lug covers.	$293
1050-0028	Rear axle (tandem) Wheel Trim kit. Includes stainless steel lug nut covers (chrome plated plastic if applicable) and center cap (No logo). E-ONE custom chassis w/ steel wheels will have chrome plated plastic lug covers.	$652
1050-0031	Front axle wheel simulator kit. Includes stainless steel wheel simulator and center cap with E-ONE logo. Note: Center cap will have an inspection port IPO a logo if equipped with Stemco oil seals.	$571
1050-0032	Rear axle (single) wheel simulator kit. Includes full stainless steel wheel simulators with integrated lug nut covers and E-ONE logo.	$833
1050-0033	Dura-Brite finish on aluminum wheel (EA). Not available on 13" wheel (445 tires).	$108
1050-0038	Steel wheels for rear axle (4) 24" split rim.	$6,734
1050-0039	Polish inner and outer aluminum wheel (EA).	$88
1050-0043	Rear axle (tandem) wheel simulator kit. Includes full stainless steel wheel simulators with integrated lug nut covers and E-ONE logo.	$1,664
1050-0044	Accuride aluminum wheels for front axle (2).	$1,724
1050-0045	Accuride aluminum wheels for rear axle (4).	$3,441
1050-0046	Accuride aluminum wheels for rear axles (8).	$6,878
1050-0047	Front axle wheel trim kit. Includes stainless steel "Cover-Up" covers with E-ONE logo. Not available with Stemco oil seals.	$306
1050-0048	Rear axle (single) Wheel Trim kit. Includes stainless steel "Cover-Up" covers with E-ONE logo. Not available with Stemco oil seals.	$392
1050-0049	Rear axle (tandem) Wheel Trim kit. Includes stainless steel "Cover-Up" covers with E-ONE logo.	$783
1050-0068	Each outboard facing wheel of the single axle unit shall have valve stem extensions; front 2", rear appropiately sized. Includes additional set (inside and outside) ship loose.	$234
1050-0070	Accuride aluminum wheels outer and steel inner for rear axles (4).	$2,047
1050-0076	Accu-Shield finish on aluminum wheel (EA). Not available on 13" wheel (445 tires).	$111
1060-0000	Two Michelin 445 tires model XTE-2 for front axle. (Obsolete from manufacturer)	$1,591
1060-0001	Two Michelin 315 tires model XZA-1 for front axle.	$1,750
1060-0002	Two Michelin 385 tires model XTE-2 for front axle. (Obsolete from manufacturer)	$1,482
1060-0003	Two Michelin 425 tires model XTE-2 for front axle. (Obsolete from manufacturer)	$1,608
1060-0004	Four Michelin 11R tires model XZE2 highway tread for rear axle.	$3,008
1060-0005	Four Michelin 12R tires model XZE highway tread for rear axle.	$3,518
1060-0006	Four Michelin 315 tires model XZA-1 for rear axle	$3,500
1060-0007	Eight Michelin 11R tires model XZE2 for rear axles.	$6,012
1060-0008	Eight Michelin 12R tires model XZE for rear axles	$7,035
1060-0009	Eight Michelin 315 tires model XZA-1 for rear axles.	$7,001
1060-0010	Two Goodyear 315 tires for front axle	$1,750
1060-0016	Four Michelin 12R rear tires with XDN2 mud and snow tread.	$3,847
1060-0017	Four Michelin 315 rear tires with XDN2 mud and snow tread.	$4,218
1060-0020	Four Goodyear 315 rear tires with mud and snow tread. Intermittent fire service rating if GAWR is over 29,560.	$3,665
1060-0021	Eight Michelin 11R rear tires with XDN2 mud and snow tread.	$6,755
1060-0022	Eight Michelin 12R rear tires with XDN2 mud and snow tread.	$7,695
1060-0023	Eight Michelin 315 rear tires with Mud and Snow tread	$8,434
1060-0026	Eight Goodyear 315 rear tires with Mud and Snow tread. Intermittent fire service rating if GAWR is over 59,120.	$7,329

1060-0030	Four Goodyear 315 rear tires with G291 highway tread.	$3,500
1060-0033	Eight Goodyear 315 rear tires with G291 highway tread.	$7,001
1060-0037	Spare tire Michelin 24R21 each.	$3,103
1060-0042	Two Michelin 365 tires model XZA for front axle. Speed rating for up to 75 mph. Requires Alcoa alum wheels.	$1,788
1060-0043	Two Michelin 425 tires model XZY3 for front axle.	$2,165
1060-0044	Two Michelin 445 tires model XZY3 for front axle.	$2,094
1060-0045	Two Michelin 445 tires model XFE for front axle.	$2,411
1060-0046	Two Michelin 425 tires model XFE for front axle.	$2,247
1060-0047	Two Michelin 385 tires model XFE for front axle.	$2,074
1060-0049	Tyron tire pressure monitoring system model TPMS. Includes wireless remote display in cab.	$1,129
1060-0050	Tire pressure monitoring valve stem caps.	$165
1060-0051	Two Michelin 385 tires model XZY3 for front axle.	$2,039
1060-0052	Eight Michelin 275/80R tires model XZE2 for rear axles.	$5,810
1060-0053	PressurePro tire pressure monitoring system for single rear axle units. Includes bail mounted display in cab.	$961
1060-0054	PressurePro tire pressure monitoring system for tandem rear axle units. Includes bail mounted display in cab.	$1,149
1060-0060	Two Michelin 315 tires model XZY3 for front axle.	$1,880
1060-0061	Four Michelin 12R rear tires with Mud and Snow XDS tread	$3,178
1060-0072	Two Goodyear 385 tires for front axle.	$2,006
1060-0073	Two Goodyear 425 tires for front axle.	$1,953
1060-0074	Two Goodyear 445 tires for front axle	$2,113
1060-0075	Four Goodyear 11R rear tires with mud and snow tread.	$3,714
1060-0076	Four Goodyear 12R rear tires with mud and snow tread.	$4,232
1060-0077	Eight Goodyear 11R rear tires with Mud and Snow tread.	$7,430
1060-0078	Eight Goodyear 12R rear tires with Mud and Snow tread	$8,465
1060-0079	Four Goodyear 11R rear tires with highway tread	$2,689
1060-0081	PressurePro tire pressure monitoring system for single rear axle units. Includes electrical system integrated display in cab.	$961
1060-0085	Eight Michelin 12R rear tires with Mud and Snow XDS tread	$6,349
1060-0086	Four Goodyear 11R rear tires with G287 MSA highway tread	$2,689
1060-0087	Two Goodyear 315 tires with G287 MSA tread for front axle	$1,687
1060-0092	Eight Michelin 275/80R22.5 rear tires with Mud and Snow tread.	$6,179
1060-0094	Cat's Eye model 6120-AB00 single rear axle tire pressure monitoring system. For use on 120 PSI tires. Includes braided lines.	$804
1060-0095	Eight Goodyear 315 rear tires with G287 MSA highway tread.	$7,098
1060-0096	Tire balancing (EA). Location: front tires.	$64
1060-0098	Two Bridgestone 315 tires model M860 for front axle.	$2,463
1060-0099	Four Bridgestone 12R tires model R250F highway tread for rear axle.	$4,024
1060-0101	Tire pressure monitoring integrated with V-MUX multiplex electrical system. Requires Vista display and D-TEK. For use with single rear axle units.	$635
1060-0102	Tire pressure monitoring integrated with V-MUX multiplex electrical system. Requires Vista display and D-TEK. For use with tandem rear axle units.	$1,096
1060-0103	Cat's Eye model 6130-AB00 single rear axle tire pressure monitoring system. For use on 130 PSI tires. Includes braided lines.	$804
1060-0104	Four Goodyear 12R rear tires with G661 HSA highway tread.	$2,737
1060-0105	Eight Goodyear 12R rear tires with G661 HSA highway tread.	$5,472
1060-0106	Four Goodyear 11R rear tires with G661 HSA highway tread.	$2,543
1060-0109	Eight Michelin 295/80R tires model XZA2 for rear axles.	$6,612
1060-0111	Four Goodyear 315 rear tires with G289 WHA tread.	$3,824
1060-0112	Tire pressure monitoring valve stem caps. Real Wheels LED indicators.	$219
1060-0114	Tire pressure monitoring valve stem caps. VECSAFE LED indicators.	$219
1060-0115	Four Goodyear 12R rear tires with G287 MSA highway tread.	$3,178
1060-0117	RWC AirGuard LED tire pressure monitoring valve stem caps (6) for single rear axle applications.	$169
1060-0118	RWC AirGuard LED tire pressure monitoring valve stem caps (8) for Tiller applications.	$226
1060-0119	RWC AirGuard LED tire pressure monitoring valve stem caps (10) for tandem rear axle applications.	$270
1060-0120	Two Goodyear 315 front tires with G289 WHA tread.	$1,913
1060-0121	Four Goodyear 11R rear tires with RHD-II G137 tread.	$3,324
1060-0123	RWC AirGuard LED tire pressure monitoring valve stem caps (2) front only. For use with rear axle Crossfire equalization systems.	$68
1070-0001	Rear suspension springs rated equal to the capacity of the axle.	$1,346
1070-0002	Rear suspension springs rated equal to the capacity of the axles.	$4,215
1070-0003	Rear suspension air ride rated equal to the capacity of the axle.	$5,468
1070-0004	Rear suspension air ride (40-46K) rated equal to the capacity of the axles.	$9,532
1070-0005	Air ride cab.	$2,812
1070-0007	Shock absorbers rear single axle. Not available on 31,000 lb.	$187
1070-0012	Reyco rear suspension springs rated equal to the capacity of the axle.	$1,346
1070-0013	Rear suspension air ride (48-54K) rated equal to the capacity of the axles.	$11,167
1070-0014	Rear suspension air ride (60-62K) rated equal to the capacity of the axles.	$12,890
1070-0015	Ridewell Dynalastic rear suspension (40-54K) rated equal to the capacity of the axles.	$12,555
1070-0017	Reyco rear spring suspension w/aux 33K rating.	$2,020
1070-0019	Rear suspension springs rated at 27,000 lbs.	$1,570

1070-0021	Rear suspension FIREMAAX EX air ride (50-54K) rated equal to the capacity of the axles. Requires TB modification on 4-jack aerials. (Raises OAH .5" over springs)	$11,118
1070-0022	Rear suspension FIREMAAX EX model FMX-482 air ride rated equal to the capacity of the axles (40-48K). Requires TB modification on 4-jack aerials. (Raises OAH .5" over springs)	$10,219
1070-0024	Lower leaf wrap. Single rear axle only.	$538
1070-0027	Rear suspension FIREMAAX EX model FMX-272 27,000 lb. single axle air ride.	$5,876
1070-0029	Rear suspension FIREMAAX EX model FMX-312 31,000 lb. single axle air ride. Requires aluminum wheels.	$7,696
1070-0030	Rear suspension FIREMAAX EX model FMX-622 air ride (60-62K) rated equal to the capacity of the axles. Requires alum wheels. Requires TB modification on 4-jack aerials. (Raises OAH .5" over springs)	$13,042
1100-0000	16-1/2" x 6" S-cam brakes with ArvinMeritor automatic slack adjusters for front axle.	$308
1100-0001	Meritor EX225H 17" disc brakes for front axle.	$1,202
1100-0002	ArvinMeritor 16-1/2" x 7" S-cam brakes with cast brake drums for a single rear axle.	$308
1100-0003	Meritor EX225H 17" disc brakes for rear axle, maximum capacity 27,000 lbs.	$1,202
1100-0004	Meritor EX225H 17" disc brakes for rear axles, maximum capacity 54,000 lbs.	$1,835
1100-0005	Brake system air 4X2/4X4.	$8,121
1100-0007	Parking brake release mounted center of the engine cover.	$312
1100-0008	Brake system air 6X4.	$8,413
1100-0009	Front axle parking brake.	$514
1100-0010	Brake emergency release for spring.	$935
1100-0011	Roll Stability Control, Includes ATC. Not available on commercial chassis, tiller or tandem axle custom chassis.	$1,944
1100-0014	ArvinMeritor 16-1/2" x 7" S-cam brakes with cast brake drums for a tandem rear axle.	$371
1100-0015	Air brake system tractor/tiller ABS system for both tractor and tiller axle brakes.	$8,302
1100-0016	16-1/2" x 6" Q-Plus S-cam brakes with ArvinMeritor automatic slack adjusters for Tillerman steering axle.	$308
1100-0018	Dust Shields. Front and Rear Axle. CAM Brakes only.	$358
1100-0019	Dust Shields. Rear Axle. CAM Brakes only.	$218
1100-0020	Compression fittings for all air brake system lines. Includes cab interior air lines as applicable.	$1,202
1100-0022	Dust Shields. Front and rear tandem axle. CAM brakes only.	$574
1100-0023	Stainless steel park brake release guard.	$209
1100-0024	G4 Electronic Stability Control (4x2), Includes RSC and ATC. Not available on 4x4, commercial chassis or tiller.	$3,419
1100-0025	ArvinMeritor 16-1/2" x 8.625" Q-Plus S-cam brakes with cast brake drums for a single rear axle. 24K axle only.	$1,266
1100-0026	G4 Electronic Stability Control (6x4), Includes RSC and ATC. Not available on 6x6 or commercial chassis.	$4,076
1100-0027	Knorr-Bremse 17" disc brakes for front axle. Timoney IFS only.	$1,202
1100-0028	ArvinMeritor 18" x 7" P-Type S-cam brakes with cast brake drums for a 33K single rear axle.	$2,219
1100-0031	Dana ESD225 17" disc brakes for front axle.	$1,202
1100-0032	Hinged stainless steel park brake release guard.	$279
1100-0033	Bendix 16-1/2" x 7" S-cam brakes for 32,500 Dana axle.	$308
1100-0034	Brake chambers 30-36 for 48K/54K tandem rear axle. N/A with disc brakes.	$1,064
1100-0035	Glad Hands tow option. Location: Front chassis frame.	$525
1100-0036	16.5" x 8.625" P-Cast S-cam brakes for 27,000 - 33,000 Meritor axle.	$788
1100-0037	Glad Hands tow option. Location: rear chassis frame.	$525
1100-0040	Gauge air brake application additional. Location: officer side overhead console.	$299
1100-0043	Emergency park brake activation valve mounted on the officer's side dash with stainless steel guard.	$650
1100-0045	2nd parking brake release mounted on the officer's side electrical access cover (side facing) with stainless steel guard. Severe duty interior only.	$873
1100-0046	Brake system air tank to be mounted as high as possible.	$209
1100-0048	Emergency park brake activation valve mounted on the center console offset driver side with stainless steel guard.	$650
1100-0049	Parking brake release mounted on center dash (not available with ABS dash).	$304
1100-0052	G4 Electronic Stability Control with Wabco OnGuard CMS system (4x2). Includes RSC and ATC. Not available on 4x4, commercial chassis or tiller.	$7,240
1100-0053	G4 Electronic Stability Control with Wabco OnGuard CMS system (6x4). Includes RSC and ATC. Not available on 4x4, commercial chassis or tiller.	$7,898
1100-0054	Bendix SN7 17" disc brakes for front axle. Reyco Granning IFS only.	$1,202
1100-0055	Spring guards on each end of brake lines from wheel to frame.	$164
1110-0000	Inlet for air system. Location: [#LOC].	$365
1110-0001	Air inlet auto eject. Includes weatherproof gasketed cover. [#LOC].	$469
1110-0002	Air dryer Bendix AD-9.	$474
1110-0003	Air dryer System Saver 1200.	$571
1110-0004	Air tank drains w/pull cords.	$416
1110-0005	Automatic moisture ejectors, heated.	$413
1110-0007	Air lines braided.	$2,213
1110-0008	Gauge air brake application mounted in cab	$299
1110-0011	Air intake restriction gauge.	$254
1110-0013	Air horns shut-off valve. Located in cab accessible by driver.	$107
1110-0026	Air horns recessed in bumper (PR).	$808
1110-0027	Isolated air tank. Includes pressure protection valve.	$550
1110-0041	Air horns Grover recessed in bumper (PR).	$985

1110-0042	Label on isolated air tank "Air Horns Only".	$32
1110-0044	Air inlet Auto-Eject. Includes [#COL] weatherproof gasketed cover. Location: [#LOC].	$469
1110-0045	Gast air compressor 110v model 3HBB-10-M300AX.	$1,054
1110-0046	Kussmaul 12V Auto Drain. For use with Kussmaul air compressor.	$457
1110-0049	Air Lines Wrapped in Thermal Loom	$1,792
1110-0050	Air brake lines to have 4 to 6" slack for future service work.	$110
1110-0052	Air horns recessed behind bumper (PR). Includes E-ONE grilles on bumper.	$1,017
1110-0053	Air horns Grover recessed in front bumper. (1) air horn 21" long, (1) air horn 24.5" long	$1,030
1110-0056	Air dryer Bendix ADIP.	$610
1110-0058	Air horns recessed in bumper (PR) with bells behind bumper.	$866
1110-0066	Air horns Grover recessed in front bumper. (1) air horn 21" long, (1) air horn 24.5" long.	$1,209
1110-0077	Recessed air outlet off isolated tank. Location: [#LOC].	$365
1110-0082	Air horns Grover model 2040 rectangular recessed in bumper (PR) with snow caps.	$1,050
1110-0090	Air horns Grover recessed in bumper (PR) with snow caps.	$1,110
1110-0095	Automatic moisture ejector, heated. Wet tank only.	$178
1110-0097	Automatic moisture ejector, non-heated (EA).	$136
1110-0104	Air horns Grover (1510) recessed in bumper (PR). Locate one each side outboard of frame.	$1,010
1110-0106	Air horns Grover recessed behind bumper (PR). Includes E-ONE grilles on bumper.	$1,194
1110-0111	Gast air compressor 110v model 1HAB-10-M100X.	$967
1110-0116	Air horns Buehl recessed in bumper (PR).	$1,026
1110-0117	Air horns Grover model 2040 rectangular recessed in bumper (PR).	$1,050
1110-0118	Inlet for air system. Includes weather proof box and Hubbel [#COL] cover. Location: [#LOC].	$465
1110-0124	Air horns Grover recessed behind bumper (PR). Includes grilles (No Logo) on bumper.	$1,194
1110-0125	Gast air compressor 110v model 3HBB-10-M300AX with moisture filter.	$1,199
1110-0127	Automatic moisture ejector, heated. Air dryer only.	$178
1110-0129	Diamond plate flip cover for air inlet or outlet with label mounted in driver's door jamb.	$113
1110-0133	Air dryer Haldex model N4253A.	$647
1110-0135	Air horns shut-off valve. Located on driver side overhead console.	$107
1110-0136	Air horns shut-off valve. Located on officer side overhead console.	$107
1110-0137	Compression fittings for pump shift ipos.	$104
1110-0138	Air horns Grover model 2040 rectangular behind bumper (PR). Includes E-ONE grilles.	$1,259
1125-0000	Retarder Telma focal mounted. All four stages applied with brake application. Not available on tandem axle or four jack aerials.	$9,889
1125-0001	Brake Jacob's exhaust	$737
1125-0002	Jacobs engine compression brake.	$1,712
1125-0003	Allison transmission retarder. Pre-select feature will be switched off with this option.	$11,718
1125-0006	Driveline Mounted Telma Retarder. Standard switch location is on console, manual lever on engine cover offset to driver's side. Cut off at 5 mph - 25% applied with throttle release & balance with brake application.	$9,889
1125-0007	Tag located at Jacob Brake Controller. To read: Do Not Operate on Wet or Slippery Surfaces.	$77
1125-0012	Driveline Mounted Telma Retarder. All four stages applied with brake application.	$9,889
1125-0013	Lever control for Telma retarder. 5 position lever with low speed cutout.	$286
1125-0019	Driveline Mounted Telma Retarder. Stage 1 & 2 applied off throttle; stage 3 & 4 applied with brake application.	$9,889
1125-0021	Driveline Mounted Telma Retarder to operate w/ 5 position lever within cab. 5 position lever sold separately.	$9,889
1125-0022	Driveline Mounted Telma Retarder. Stage 1 applied off throttle; stage 2, 3 & 4 applied with brake application.	$9,889
1150-0007	Tray center of bumper with slats 34x13x10 for 149 feet of 1-3/4" double jacket hose or 57 feet of 5" LDH.	$665
1150-0008	Tray center of bumper with slats 34x13x12 for 182 feet of 1 3/4" double jacket hose or 70 feet of 5" LDH	$665
1150-0054	Hinged diamond plate lid for driver side bumper tray. Includes 1/4 turn latch and gas shock hold open.	$265
1150-0055	Hinged diamond plate lid for center bumper tray. Includes 1/4 turn latch and gas shock hold open.	$292
1150-0056	Hinged diamond plate lid for officer side bumper tray. Includes 1/4 turn latch and gas shock hold open.	$265
1150-0059	Red vinyl lid with velcro fasteners for bumper tray driver side.	$174
1150-0060	Red vinyl lid with velcro fasteners for bumper tray officer side.	$174
1150-0061	Red vinyl lid with velcro fasteners for bumper tray center.	$174
1150-0062	Black vinyl lid with velcro fasteners for bumper tray driver side.	$174
1150-0063	Black vinyl lid with velcro fasteners for bumper tray officer side.	$174
1150-0064	Black vinyl lid with velcro fasteners for bumper tray center.	$174
1150-0065	Diamond plate lid for driver, center, and officer hose trays. 5.25" high with dual chrome grab handles, rubber hood latches and gas shocks.	$571
1150-0085	Nylon black strap on officer side front bumper tray (EA).	$75
1150-0086	Nylon black strap on driver side front bumper tray (EA).	$75
1150-0087	Nylon black strap on center front bumper tray (EA).	$75
1150-0094	Hinged diamond plate lid for driver side bumper tray. Includes D-Ring latch and gas shock hold open.	$290
1150-0095	Hinged diamond plate lid for center bumper tray. Includes D-Ring latch and gas shock hold open.	$317
1150-0096	Hinged diamond plate for officer side bumper tray. Includes D-Ring latch and gas shock hold open.	$290
1150-0097	Tray driver side bumper outboard for hydraulic/cord reel.	$665

1150-0098	Tray officer side bumper outboard for hydraulic/cord reel.	$665
1150-0100	Hinged floor of center bumper tray. Hinged to the rear.	$735
1150-0102	Diamond plate lid for driver hosetray. 5.25" high with chrome grab handle, rubber hood latch, gas shock and water stop angle.	$376
1150-0103	Diamond plate lid for center hose tray 5.25" high with chrome grab handle, rubber hood latch, gas shock and water stop angle.	$376
1150-0104	Diamond plate lid for officer hosetray. 5.25" high with chrome grab handle, rubber hood latch, gas shock and water stop angle.	$376
1150-0105	Diamond plate lid for center and driver hosetrays; 2/3 lid. 5.25" high with chrome grab handle, rubber hood latches, gas shocks and water stop angle.	$473
1150-0106	Diamond plate lid for center and officer hosetrays; 2/3 lid. 5.25" high with chrome grab handle, rubber hood latches, gas shocks and water stop angle.	$473
1150-0107	Nylon black strap with clip release on officer side front bumper tray.	$134
1150-0108	Nylon black strap with clip release on driver side front bumper tray.	$134
1150-0109	Nylon black strap with clip release on center front bumper tray. The strap shall be attached to the inboard side of the tray and shall not reduce the overall tray capacity	$134
1150-0111	Additional divider for front bumper hose tray.	$100
1150-0112	Hinged diamond plate lid for center bumper tray. Includes D-Ring latch and moon spring hold open.	$317
1150-0114	Access cover in center bumper tray for center bumper mounted speaker.	$90
1150-0115	Notch bumper tray lid for preconnected hose. Notch location: [#LOC].	$131
1150-0116	Bumper tray driver's side with slats 10 inches deep (approx 9 inches to slats).	$438
1150-0117	Bumper tray driver's side with slats 12 inches deep (approx 11 inches to slats).	$438
1150-0118	Bumper tray driver's side with slats 14 inches deep (approx 13 inches to slats).	$438
1150-0119	Bumper tray center of bumper with slats 10 inches deep (approx 9 inches to slats).	$438
1150-0120	Bumper tray center of bumper with slats 12 inches deep (approx 11 inches to slats).	$438
1150-0121	Bumper tray center of bumper with slats 14 inches deep (approx 13 inches to slats).	$438
1150-0122	Bumper tray officer's side with slats 10 inches deep (approx 9 inches to slats).	$438
1150-0123	Bumper tray officer's side with slats 12 inches deep (approx 11 inches to slats).	$438
1150-0124	Bumper tray officer's side with slats 14 inches deep (approx 13 inches to slats).	$438
1150-0125	Divider center bumper hose tray running front to back with adjustable track (Provides two storage areas, one left and one right of divider).	$230
1150-0126	Divider center bumper hose tray running side to side with adjustable track (Provides two storage areas, one ahead and one behind divider).	$230
1150-0127	Tray center of bumper with slats 34x13x16 with divider running side to side	$665
1150-0128	Notch front bumper tray for speaker/Q2B/radar. Will reduce front hose/equipment load. Center tray only.	$118
1150-0129	Diamond plate lid for center hosetray. Includes chrome grab handle, rubber hood latches and gas shock.	$376
1150-0130	Black nylon cargo net on center front bumper tray.	$286
1150-0131	Extinguisher tube in front bumper extension. Location: [#LOC].	$738
1150-0132	Tray center bumper for hydraulic/cord reel.	$725
1150-0133	Diamond plate raised full lid for extended front bumper. 6" high with dual chrome grab hands, rubber hood latches and gas shocks.	$571
1150-0136	Bumper tray center of bumper with slats 16 inches deep (approx 15 inches to slats). Mount tray 1" above gravel shield.	$524
1150-0137	Diamond plate lid for center hosetray and jumpline next to tray. 5.25" high with chrome grab handle, rubber hood latch, gas shock and water stop angle if applicable.	$433
1150-0138	Bumper pan driver's side without slats 4 inches deep with strap. For use with suction strainer only.	$438
1150-0139	Nylon black strap with aluminum quick release buckle for front bumper hose tray. Strap to attach to front and rear walls of tray down low as applicable. Location: [#LOC].	$110
1150-0140	Bumper tray center of bumper with slats 14 inches deep (approx 13 inches to slats). Mount tray 1" above gravel shield.	$524
1150-0141	Bumper tray officer's side with slats 12 inches deep (approx 11 inches to slats). Mount tray 1" above gravel shield.	$524
1150-0142	Hinged diamond plate lid for center bumper tray. Includes (4) sides, 1/4 turn latch and gas shock hold open. For use with raised compts only.	$375
1150-0143	Hinged diamond plate lid for officer bumper tray. Includes (4) sides, 1/4 turn latch and gas shock hold open. For use with raised compts only.	$375
1150-0144	Diamond plate lid for center hosetray and jumpline next to tray. 8.25" high with chrome grab handle, rubber hood latch, gas shock and water stop angle if applicable.	$491
1150-0145	Single crosslay on top of the front bumper gravel shield. Tray to be "U" shape, 10" wide x 8" high x the width of the gravel shield. Vinyl cover, [#COL], with end flaps to cover crosslay, velcro along front edge, fastened along back. Requires 24" extension.	$805
1150-0146	Water stop angle. Gravel shield mounted. Requires raised lid and/or 28" bumper extension with reel trays.	$187
1150-0147	Diamond plate lid for driver, center, and officer hose trays. 5.25" high with dual chrome grab handles, SS butterfly latches and gas shocks.	$649
1150-0149	Nylon black cargo net on sides for bumper crosslay.	$212
1150-0150	Double crosslay on top of the front bumper gravel shield. Tray to be "U" shape, approx 20" wide x 7.5" high x 90" wide minimum or as per application bumper width. Holds 200' of 1.75" DJ (each). Includes tri-fold diamond plate cover hinged at the front. Requires seperate side cover option and 28" extension.	$1,380
1150-0152	Hinged diamond plate lid for officer side bumper tray. Includes D-Ring latch and gas shock hold open.	$290

1150-0153	Bumper tray officer's side with slats located between front intake and frame extension. Tray to be approx 9" W (min) x 17" L x 14" D (13" to slats) to hold 25' of 5" LDH.	$438
1150-0154	Bumper tray center of bumper with slats located to rear of Q2B. Tray to be approx 34"W x 9"L x 10" deep (9" to slats).	$636
1150-0158	Bumper tray center of bumper without slats 12 inches deep.	$299
1150-0160	Hinged smooth plate lid for center bumper tray. Includes D-Ring latch and gas shock hold open. Smooth plate lid will be painted with black Durabak.	$369
1150-0161	Double crosslay on top of the front bumper gravel shield. Tray to be "U" shape to hold 200' of 1.75" DJ (each). Includes bi-fold diamond plate cover hinged at the rear. Requires separate side cover option and 28" extension.	$1,380
1150-0163	Tray officer side bumper next to front intake/discharge. Half moon style for 25' of 5" rolled hose.	$632
1150-0164	Bumper tray center of bumper with black Turtle Tile 14" deep (approx. 13.25" from tile). Includes: hinged diamond plate lid for center bumper tray with Tri-Mark latch, gas shock hold open and door ajar switch.	$905
1150-0165	Bumper tray driver's side without slats 10 inches deep.	$375
1150-0166	Bumper tray driver's side without slats 12 inches deep.	$375
1150-0167	Bumper tray driver's side without slats 14 inches deep.	$375
1150-0168	Bumper tray center of bumper without slats 10 inches deep.	$375
1150-0169	Bumper tray center of bumper without slats 12 inches deep.	$375
1150-0170	Bumper tray center of bumper without slats 14 inches deep.	$375
1150-0171	Bumper tray officer's side without slats 10 inches deep.	$375
1150-0172	Bumper tray officer's side without slats 12 inches deep.	$375
1150-0173	Bumper tray officer's side without slats 14 inches deep.	$375
1150-0177	Notch front bumper tray for speaker/Q2B. Will reduce front hose/equipment load. Driver's side only.	$118
1150-0178	Hinged diamond plate lid for center bumper tray. Includes push button latch and gas shock hold open.	$292
1150-0179	Bumper tray center of bumper without slats 16 inches deep.	$375
1150-0180	Yellow vinyl lid with velcro fasteners for bumper tray center.	$174
1150-0181	Nylon black strap with aluminum quick release buckle for front bumper hose tray. Strap to attach to side walls of tray down low as applicable. Location: [#LOC].	$110
1150-0184	Vinyl [#COL] side covers for diamond plate bumper crosslay cover.	$179
1150-0185	Hinged diamond plate lid for center bumper tray. Includes push button latch and moon spring hold open.	$292
1150-0187	Nylon yellow strap with aluminium quick release buckle for front bumper hose tray. Strap to attach to front and rear walls of tray down low as applicable. Location: [#LOC].	$110
1150-0195	Bumper tray center of bumper with black Turtle Tile 14" deep (approx. 13.25" from tile).	$438
1150-0196	Tray officer side bumper next to front intake. Half moon style for 20' of 6" rolled hose.	$632
1150-0197	Nylon black strap with aluminium quick release buckle. Location: driver, officer and center top of front bumper gravel shield.	$326
1150-0198	Notch front bumper tray for speaker/Q2B. Will reduce front hose/equipment load. Officer's side only.	$118
1150-0199	Nylon black cargo net with bungee hold downs on sides for bumper crosslay.	$262
1150-0201	Notch front bumper tray for speaker/Q2B. Notch to be sized as close to obstacle as possible to provide more storage space in tray. Will reduce front hose/equipment load. Center only.	$118
1150-0203	Hinged smooth plate lid for center bumper tray. Includes D-Ring latch and gas shock hold open. Smooth plate lid will be painted with black Scorpion coating.	$369
1150-0206	Hinged diamond plate lid for center bumper tray. Includes push button latch chrome grab handle and gas shock hold open.	$339
1150-0207	Hinged diamond plate lid for center bumper tray. Includes 1/4 turn latch and moon spring hold open.	$292
1150-0208	Bumper tray officer's side without slats, approximately 14 inches deep, 17" front to rear X 9" in length side to side.	$438
1150-0209	Bumper tray driver's side without slats, approximately 14 inches deep, 17" front to rear X 17" in length side to side.	$438
1150-0210	Tray driver side bumper next to frame. Half moon style for 25' of 5" rolled hose.	$632
1150-0212	Nylon black strap with clip release on officer side front bumper tray running front to back.	$134
1150-0213	Bumper tray center of bumper (w/o slats) 10 inches deep.	$438
1150-0214	Traffic cone storage on front bumper extension. Cones to be oriented downard through a 7 3/4" hole in the gravelshield. Includes nylon strap with aluminum buckle. Location: [#LOC].	$363
1150-0215	Hinged diamond plate lid for center bumper tray. Includes 1/4 turn latch and two (2) gas shock hold open.	$319
1150-0216	Bumper tray lid(s) to be constucted using 3/16" aluminum ipos.	$140
1150-0217	Hinged diamond plate lid for officer side bumper tray 2/3 of length hinged 1/3 remaining length is fastened in place. Hinged inboard,/fixed portion outboard. Includes D-Ring latch and gas shock to hold open the hinged section.	$290
1150-0218	Bumper tray center of bumper with slats 12 inches deep (approx 11 inches to slats). Mount tray 1" above gravel shield.	$524
1150-0219	Additional gas shock on front bumper tray lid. Location: [#LOC].	$151
1150-0220	Tray driver side bumper outboard for hydraulic/cord reel, 18 inches deep IPOS.	$810
1150-0221	Tray officer side bumper outboard for hydraulic/cord reel, 18 inches deep IPOS.	$810
1150-0223	Bumper tray officer's side with slats 16 inches deep (approx 15 inches to slats).	$438
1150-0224	Bumper tray officer's side without slats located between front intake and frame extension. Tray to be approx 9" W (min) x 17" L x 14" D to hold 25' of 5" LDH.	$375
1150-0225	The rear wall of bumper tray to have louvers for additional ventilation. Location: [#LOC].	$171

1150-0226	Smooth plate raised full lid with black Durabak finish for extended front bumper. 6" high with dual chrome grab hands, rubber hood latches and gas shocks.	$1,402
1150-0228	Bumper tray driver's side of bumper with black Turtle Tile 14" deep (approx. 13.25" from tile).	$438
1150-0230	Bumper trough full length, mounted on top of gravel shield. Trough shall run side to side 4" high, 7" wide made from 3/16" smooth plate aluminum.	$234
1150-0231	Nylon black strap with aluminum quick release buckle for front bumper hose tray. Strap to attach to front and rear walls of tray as high as possible. Location: [#LOC].	$110
1150-0232	Hinged diamond plate lid for center bumper tray. Includes Tri-Mark latch and gas shock hold open.	$391
1150-0235	Diamond plate lid 3/16 " thick for driver, center, and officer hose trays. 5.25" high with dual chrome grab handles, SS butterfly latches and gas shocks.	$706
1150-0236	Recessed bumper double crosslay to hold of 200' of 1.75" DJ hose in each crosslay. The crosslay floor/bottom shall be slotted to allow drainage (no slats). Includes hinged bi-fold raised lid in center with outboard fixed panels for optional equipment and stainless steel scuff guards at each side of crosslay opening across bottom and sides. Requires 28" extension, side covers, 12" heavy duty bumper and engineering approval.	$3,575
1150-0237	Bumper tray driver's side without slats. Tray to be approx 17.5" W x 17"L x 14" D.	$375
1150-0238	Bumper tray officer's side without slats. Tray to be approx 11" W x 17"L x 14" D.	$375
1150-0239	Bumper trays shall have 1/2" drain holes IPOS.	$26
1150-0242	Black nylon cargo net on officer side front bumper tray.	$286
1150-0243	Bumper tray officer's side with slats 10 inches deep (approx 9 inches to slats). Mount tray 2" above gravel shield.	$524
1150-0245	Bumper tray driver's side with slats 10 inches deep (approx 9 inches to slats). Mount tray 2" above gravel shield.	$524
1150-0247	Hinged diamond plate lid raised 3" high for center bumper tray. Includes a single chrome grab handle, SS butterfly latches and gas shocks.	$356
1150-0248	Divider driver side bumper hose tray running side to side with adjustable track (Provides two storage areas, one ahead and one behind divider).	$230
1150-0249	Divider officer side bumper hose tray running side to side with adjustable track (Provides two storage areas, one ahead and one behind divider).	$230
1150-0250	Single crosslay on top of the front bumper gravel shield. Tray to be "U" shape, approx 10" wide x 7.5" high x 90" wide. Holds 200' of 1.75" DJ (each). Includes diamond plate cover hinged at the front. Requires seperate side cover, and 24" extension.	$1,082
1150-0253	Black nylon cargo net on driver side front bumper tray.	$286
1150-0254	Bumper tray driver side of bumper with slats 14 inches deep (approx 13 inches to slats) fabricated from smooth plate aluminum. Mount tray 2" above gravel shield. Outside facing surface of tray below bumper shall be painted black Durabak.	$611
1150-0255	Hinged smooth plate lid for driver side bumper tray. Includes D-Ring latch and gas shock hold open. Smooth plate lid will be painted with black Durabak.	$369
1150-0256	Bumper tray(s) to be constructed using smooth plate aluminum with exterior surface painted black Durabak.	$175
1150-0258	Recessed bumper double crosslay to hold of 200' of 1.75" DJ hose in each crosslay. The crosslay floor/bottom shall be slotted to allow drainage (no slats). Includes hinged bi-fold raised lid in center with outboard fixed panels for optional equipment and stainless steel rollers at each side of crosslay opening across bottom and sides. Requires 28" extension, side covers, 12" heavy duty bumper and engineering approval.	$3,719
1150-0259	Bumper tray full width of bumper (approx. 85") without slats 6" inches deep.	$817
1150-0261	Diamond plate lid for driver, center, and officer hose trays. approx 6.25" high or as applicable to allow for jumpline swivel to be under lid pre-connected. with dual chrome grab handles, SS butterfly latches and gas shocks.	$687
1150-0264	Recessed bumper double crosslay to hold 200' of 1.75" DJ hose in each crosslay with a nozzle as applicable. The crosslay floor/bottom shall be slotted to allow drainage (no slats). Includes hinged bi-fold full width raised lid for open full access to crosslays when open and stainless steel scuff guards at each side of crosslay opening across bottom and sides. Requires 28" extension, side covers, 12" heavy duty bumper and engineering approval. Lid shall be raised approx 5.25" above top of bumper for capacity to ensure ease of use with a nozzle. Lid to be secured in closed position with S/S Butterfly latches. Capacity may be affected and may require a compact nozzle depending on hose selection as loaded.	$3,768
1150-0266	Smooth plate raised full lid with black Durabak finish for extended front bumper. 6" high with one 24" Haralson Metals Stainless knurled handrail in place of grab handles centered on the lid, butterfly latches on side and gas shocks.	$1,450
1150-0269	Bumper tray to be constucted using 3/16" aluminum ipos.	$97
1150-0270	Tray officer side bumper next to frame. Half moon style for (3) 50' sections of 1.5" rolled hose.	$632
1150-0271	Tray driver side bumper next to frame. Half moon style for (6) 50' sections of 1" rolled hose.	$632
1150-0272	Raised lid over bumper tray to be extended over jumpline swivel on top of gravel shield. For use with 2" swivel only.	$57
1150-0273	Nylon black cargo net with black powder coated quick release buckles on sides for bumper crosslay.	$309
1150-0275	Hinged smooth plate lid for center bumper tray. Includes 1/4 turn latch and gas shock hold open. Smooth plate lid will be painted black Durabak.	$365
1150-0276	Nylon black strap with aluminum quick-release buckle. Location: driver, officer and (2) center top of front bumper gravel shield.	$438
1155-0002	Winch, electric front mounted Ramsey 12,000 lb. Includes access door with quarter turn latch and spring hold open device.	$3,926
1155-0003	Winch Warn Series 8 - 8,000lb with 125' 3/8" plated cable.	$3,370

1155-0005	Winch, Warn Series 12, 12,000 lb. with 125' 3/8" plated cable. Includes access door with quarter turn latch and spring hold open device. Locate: Mounted to the chassis frame extension centered at the front bumper area.	$4,936
1155-0013	Winch, Warn Series 12, 12,000 lb. with 125' 3/8" plated cable. Includes access door, hinged rearward that is smooth plate alum (IPO tread) and painted with black Scorpion brand coating inside and outside surfaces (smooth finish). Latch to be D-Ring style (IPO std. 1/4 turn latch). Lid to have 1 gas shock.	$5,059
1155-0014	A 6000 lb Warn multi-mount (portable) electric reversible winch with 125' of 3/8" plated wire rope and a replaceable clevis hook shall be installed and shall be controlled with a 12' remote control switch. Includes rollers.	$2,156
1155-0018	Winch, Warn Series 12-S Spydura Pro, 12,000 lb. with 100' of 7/16" synthetic rope and Hawse fairlead. Includes access door with quarter turn latch and spring hold open device.	$5,517
1160-0000	Bumper 10" stainless steel.	$1,228
1160-0001	Bumper 12" high swept back stainless steel.	$1,389
1160-0002	Bumper reinforcement backing. For use with 10" SS or heavy duty bumpers only.	$435
1160-0008	3/16" Front Bumper Gravel Shield.	$125
1160-0012	12" Front Bumper Gravel Shield Extension.	$139
1160-0013	16" Front Bumper Gravel Shield Extension.	$265
1160-0014	20" Front Bumper Gravel Shield Extension.	$471
1160-0015	24" Front Bumper Gravel Shield Extension.	$623
1160-0016	28" Front Bumper Gravel Shield Extension.	$753
1160-0020	License plate holder mounted center of front bumper.	$38
1160-0021	Number plate, removable size to fit between air horns on front bumper. Spaced out from face of bumper so plate can be removed.	$169
1160-0030	Steel tow bar located below front bumper mounted to chassis extensions for towing purposes only, painted black.	$1,771
1160-0031	Notch front bumper for low "S" type front intake. Includes tray below pipe extending from cab to bumper.	$1,043
1160-0034	8" Front Bumper Extension.	$139
1160-0041	Heavy duty front bumper 10" high with full wrap around. To be painted job color.	$2,154
1160-0042	Heavy duty front bumper 10" high with full wrap around. To be painted 767681 EG black.	$2,154
1160-0049	License plate holder mounted officer side of front bumper.	$38
1160-0050	12" heavy duty front bumper with full wrap around. To be painted L0318EG metallic silver.	$2,154
1160-0051	3/16" Front Bumper Gravel Shield. Smooth plate painted with black Durabak.	$1,292
1160-0052	Recessed winch receiver in front bumper for model QM5000 portable winch. Includes swing down front center section of bumper for winch access, bumper reinforcement, winch enclosure, raised lid, and port winch wiring. For use on E-ONE chassis with 10" high 28" ext bumper only.	$4,670
1160-0053	14" Front Bumper Gravel Shield Extension.	$203
1160-0054	Overlay front heavy duty bumper with diamond plate panels.	$368
1160-0055	Guard straps for bumper mtd recessed Q2B - polished stainless steel.	$294
1160-0060	Dock bumpers (4) on front bumper equally spaced (as applicable).	$292
1160-0061	10" heavy duty front bumper with full wrap around. To be painted L0318EG metallic silver.	$2,154
1160-0062	Rear bumper steel 8" deep with Gator Grip dia plt overlay. Includes rubrail across rear surface and handrail located below hosebed.	$1,841
1160-0064	Heavy duty front bumper 10" high with full wrap around. To be painted [#COL].	$2,154
1160-0065	Heavy duty front bumper 10" high with full wrap around. Center of bumper to have a 5" deep notch for recessed Q2B. Bumper to be painted job color.	$2,673
1160-0066	License plate holder mounted driver side of front bumper.	$38
1160-0068	1/8" Front Bumper Gravel Shield. Smooth plate painted with black Durabak.	$1,292
1160-0084	Heavy duty 12" front bumper with full wrap around. To be painted job color.	$2,154
1160-0094	18" Front Bumper Gravel Shield Extension.	$369
1160-0095	Heavy duty front bumper with full wrap around. To be painted FLNA 91733 silver.	$2,154
1160-0103	Rear bumper steel 8" deep with Gator Grip dia plt overlay. Includes rubrail across rear surface and handrail located horizontally below turntable access door.	$1,841
1160-0104	Swing down front section of bumper. 10" front bumper only. Requires extended front bumper and bumper reinforcement.	$1,117
1160-0108	3/16" Front Bumper Gravel Shield. Smooth plate painted with black Scorpion coating.	$1,292
1160-0116	Heavy duty front bumper 10" high with full wrap around. Driver side of bumper to have a 5" deep notch for recessed Q2B. Bumper to be painted job color.	$2,673
1160-0117	License plate holder mounted driver side of front bumper.	$38
1160-0120	1/8" Front Bumper Gravel Shield. Includes 1" return break on each side of heavy duty bumper.	$153
1160-0121	Diamond plate lower gravelshield. Located under side of the front bumper extension.	$735
1160-0122	20" Front Bumper Gravel Shield Extension. The extension shall extend further forward and each side to align with the edge of the bumper.	$539
1160-0123	10 GA brushed stainless steel overlay on front face of 12" heavy duty bumper.	$567
1160-0124	Heavy duty 12" front bumper with full wrap around. To be painted the same as the upper area two tone job color.	$2,154
1160-0125	Heavy duty front bumper 10" high with full wrap around. Officer side of bumper to have a 5" deep notch for recessed Q2B. Bumper to be painted job color.	$2,673
1160-0129	License plate holder hinge mounted below center of front bumper.	$75
1160-0130	Rear bumper steel 8" deep with Gator Grip dia plt overlay and angled (Boston style) style corners. Includes rubrail across rear surface and handrail located below hosebed.	$1,971
1160-0131	1/8" Front Bumper Gravel Shield for heavy duty bumper. Includes 1" turn down around perimeter of HD bumper.	$206

1160-0133	Heavy duty front bumper 10" high with full wrap around. Center of bumper to have a 5" deep notch for recessed Q2B. Bumper to be painted 2-tone job color.	$2,673
1160-0136	Bumper guide pinned (PR).	$481
1160-0137	Heavy duty 12" front bumper with full wrap around. To be painted [#COL].	$2,154
1160-0138	3/16" Front Bumper Gravel Shield. Extend shield to flush with heavy duty bumper edge.	$512
1160-0140	3/16" Front Bumper Gravel Shield for heavy duty bumper. Includes 1" turn down around perimeter of HD bumper.	$329
1160-0141	3/16" Front Bumper Gravel Shield with 1" turn down lips to protect the top edge of the heavy duty bumper from damage. Smooth plate painted with black Durabak.	$1,340
1160-0144	Heavy duty 12" front bumper with full wrap around. Center of the bumper to be extended (boxed out) for Q2B to be recessed without intruding into the bumper trays, recessed crosslays or any other options as applicable. To be painted [#COL].	$2,787
1160-0145	Notch front bumper for low "S" type front intake. 10" deep tray below pipe extending from cab to bumper to hold at minimum 25' of 5" LDH. Include nylon strap (seat belt type) for tray.	$1,847
1200-0018	T handle transmission selector.	$1,468
1200-0020	TransSynd synthetic transmission fluid for EVS3000.	$184
1200-0021	TransSynd synthetic transmission fluid for EVS 4000.	$289
1200-0062	The engine oil and transmission dip sticks to have tags. Tags to be attached to each by cable. Use colored tag to match dip stick color.	$147
1200-0063	The engine oil dipstick to have yellow handle and the transmission dipstick to have a red handle.	$208
1200-0083	Transmission re-programming. "D" allows transmission to shift from 1st - 4th gear, and "Mode" allows 5th gear.	$650
1200-0115	Polyurethane engine mounts. Cummins engines only.	$105
1200-0234	Eng/Trans Cummins ISL 350HP/EVS3000 2013 EPA compliant engine.	$77,787
1200-0235	Eng/Trans Cummins ISL 400HP/EVS3000 2013 EPA compliant engine.	$90,537
1200-0236	Eng/Trans Cummins ISL 450HP/EVS3000 2013 EPA compliant engine.	$91,319
1200-0237	Eng/Trans Cummins ISX12 400HP with EVS4000 transmission. 2013 EPA Compliant.	$116,031
1200-0238	Eng/Trans Cummins ISX12 450HP with EVS4000 transmission. 2013 EPA Compliant.	$117,449
1200-0239	Eng/Trans Cummins ISX12 500HP with EVS4000 transmission. 2013 EPA Compliant.	$118,866
1200-0241	Eng/Trans Cummins ISX15 550HP with EVS4000 transmission. 2013 EPA Compliant.	$125,384
1200-0242	Eng/Trans Cummins ISX15 600HP with EVS4000 transmission. 2013 EPA Compliant.	$128,497
1200-0245	Eng/Trans Cummins ISX12 500HP with EVS4500 transmission. 2013 EPA Compliant.	$120,694
1200-0270	Eng/Trans Cummins ISL 380HP/EVS3000 2013 EPA compliant engine.	$85,437
1225-0005	Exhaust heat shield. Locate below compartment floor.	$179
1225-0006	Exhaust tip stainless steel for Plymovent. For exhaust extraction system.	$337
1225-0008	Wrap exhaust with heat tape from the turbo down to the flex pipe. Inspect after install for tears in material. Wrap outside with wire mesh to ensure material remains affixed.	$804
1225-0009	Anchor plate for Nederman exhaust system. For use with standard nozzle. Ship Loose.	$250
1225-0012	Ward No Smoke Exhaust System.	$16,734
1225-0013	Tailpipe support. Locate between tailpipe and body approx 10" in from edge of body.	$508
1225-0014	Exhaust driver side custom chassis.	$592
1225-0020	Exhaust tip MagneGrip. For exhaust extraction system. Tip to protrude appox. 2" outside of body (Not rubrail).	$617
1225-0021	Cover exhaust with blanket from the turbo down to the flex pipe (as applicable). Visually inspect after install for tears in material.	$285
1225-0024	Plymovent Grabber magnetic exhaust end. Bolt-on for exhaust extraction system.	$411
1225-0026	Rain cap vertical exhaust chrome.	$86
1225-0027	Vertical exhaust officer side. This will include the vertical exhaust support. Aerial vertical exhaust to be plumbed through (internal) right rear of pump module. Top of pipe to turn out.	$2,321
1225-0031	Wrap exhaust with heat tape from the turbo down to the muffler. Visually inspect after install for tears in material. Wrap outside with wire mesh to keep material from coming off.	$850
1225-0033	Exhaust diverter. Diverts exhaust from officer side to driver side. Includes well labeled switch accessible to driver.	$5,158
1225-0035	Exhaust end for Plymovent. For exhaust extraction system. Exhaust to be angled rearward to allow for possible deflection if impacted.	$458
1225-0039	Modify the tailpipe to discharge straight out of a side panel located below R1 compartment but above the bottom edge of the body. Exhaust tip to be MagneGrip for exhaust extraction system. .	$928
1225-0042	Firwin exhaust blanket from the turbo down to the DPF. Includes shield over DPF.	$679
1225-0043	Exhaust end for Plymovent. For exhaust extraction system. Set back approx. 4" from exhaust end. Includes "Caution Hot" label above exhaust on side of body.	$279
1225-0048	Exhaust outlet cooling tip.	$227
1225-0051	Exhaust diverter. Diverts exhaust from officer side to vertical. Includes well labeled switch accessible to officer.	$5,158
1225-0053	Firwin exhaust blanket from the turbo down to the DPF.	$820
1225-0054	Locate exhaust end 3" below rubrail extending 2" past rubrail.	$230
1250-0003	Frame 10.25 x 3.5 x .375 chassis.	$5,334
1250-0004	Frame - Torque box for HP95 Mid-Mount aerial.	$20,024
1250-0005	Frame - Torque box for tandem axle RM aerial.	$20,649
1250-0006	Frame liner 9.375 x 3.125 x .375.	$2,937
1250-0009	Frame - Torque box for Tiller.	$69,477
1250-0014	Frame - Torque box for HP100 platform.	$26,783
1250-0025	Frame 12 x 3.5 x .375 chassis.	$5,334
1250-0026	Frame liner 11.125 x 3.125 x .375.	$3,268
1250-0027	Frame - Torque box for tandem axle RM aerial with no waterway pipe.	$18,802

1250-0029	Torque box modifications to allow for Hendrickson FIREMAAX tandem air ride suspension (for use with HM100/110 and HP100).	$1,618
1250-0061	Frame liner "L" 8.875 x 3.125 x .375.	$2,726
1250-0062	Frame - Torque box for HP100 platform with 6" w/way pipe. For use with industrial applications only.	$29,022
1250-0063	Frame - Torque box for single axle RM aerial.	$18,949
1250-0064	Frame - Torque box for HP100 platform with 5" w/way pipe. For use with 2000 GPM waterway flow. May affect ground ladder storage in tunnel.	$28,937
1250-0067	Chassis frame rails shall be zinc plated (galvanized) IPOS. Includes rear subframe rails (if applicable).	$1,917
1250-0068	Chassis frame rails, front frame extensions, rear subframe (Urban Interface), crossmembers and battery brackets shall be zinc plated (galvanized) IPOS.	$4,632
1250-0070	Chassis frame liner shall be zinc plated (galvanized) IPOS.	$491
1250-0071	Frame - Formed torque box for HP95 Mid-Mount aerial.	$20,024
1250-0072	Torque box modifications to allow for Hendrickson FIREMAAX tandem air ride suspension (for use with CR100/137, 95-Platform and HP100 Platform).	$2,862
1250-0073	Frame - Formed torque box for HP95 Mid-Mount aerial. Includes 12" high rails below cab.	$20,024
1350-0001	Dual fuel fill package. Additional fuel fill provided on officer side of unit.	$490
1350-0002	Recessed fuel fill	$126
1350-0003	Fuel system 50 gallon.	$1,459
1350-0004	Fuel system 50 gallon saddle tanks.	$2,509
1350-0005	Fuel system 65 gallons.	$1,541
1350-0008	Fuel water separator Fuel-Pro 382. Filter is top serviceable.	$668
1350-0009	Fuel line hose braided.	$285
1350-0010	Fuel pick-up for generator or pump. Includes hoses run to generator compartment.	$132
1350-0011	Fuel pump electric w/re-prime.	$405
1350-0012	Fuel shut-off valve. Location: [#LOC].	$103
1350-0013	Racor fuel/water separator to be a bottom drop out style. Shall include indicator light and audible alarm.	$705
1350-0014	Thermal control in-line fuel heater.	$469
1350-0023	Fuel cooler, to be routed from the discharge side of the pump to the chassis fuel line. Cooler to be functioning when the pump is in operation.	$448
1350-0026	Fuel Lines Wrapped in Thermal Loom	$840
1350-0027	Fitch fuel catalyst drop in style	$771
1350-0037	Fuel system w/65 gallon stainless steel tank.	$2,707
1350-0040	Fuel system 50 gallon stainless steel saddle tanks.	$4,891
1350-0041	Fuel line service loop for tank maintenance. 4' loop coiled above fuel tank(s).	$89
1350-0043	Fuel system w/50 gallon stainless steel tank.	$2,488
1350-0046	Fuel water separator Fuel-Pro 382 with light and alarm. Filter is top servicable.	$771
1350-0048	Fuel system 100 gallons. Tank located above framerails to rear of cab.	$2,209
1350-0049	Fuel system 85 gallons. Tank located above framerails to rear of cab.	$2,209
1350-0050	Fuel system 60 gallon saddle tanks.	$2,966
1350-0053	Racor model 4120R1230 fuel/water separator.	$784
1350-0054	Fuel water separator Fuel-Pro 382 with light and alarm. Filter is top servicable.	$771
1350-0057	Fuel line hose silicone.	$285
1400-0002	Battery four group 31 1000 CCA.	$966
1400-0003	Battery six group 31 1000 CCA.	$1,445
1400-0010	Battery six Delco 1150 Hi-Cycle 700 CCA.	$1,273
1400-0011	Battery splash cover for ULC compliance.	$292
1400-0019	Special battery jumper stud location. Jumper studs to be located [#LOC].	$342
1400-0020	Relocate custom chassis batteries. Location: [#LOC].	$1,023
1400-0021	Six (6) Odyssey Group 31 1000CCA Batteries. Locate (3) each side of the chassis.	$3,681
1400-0023	Battery six Delco 1110 Hi-Cycle 750CCA.	$1,273
1400-0024	Jumper studs to be located below driver's side front corner of body (or pump module if equipped). Studs to face down with positive stud outboard.	$206
1400-0027	Additional set of jumper studs. Location: Opposite standard location.	$352
1400-0028	Battery six Optima model D31T 900CCA.	$3,368
1400-0032	Battery five group 31 1000 CCA (two left / three right). For use with below cab DEF tank only.	$1,207
1400-0033	Heater pads for (4) Group 31 battery system. Wire pads to block heater receptacle.	$987
1400-0034	Stainless steel battery trays.	$488
1400-0036	Battery six group 31 1000CCA. Deka model 1231MF.	$1,673
1400-0038	Battery two 8D 1400 CCA.	$1,181
1400-0039	Battery five Optima model D31T 900CCA.	$2,980
1400-0040	Battery set additional two group 31 1000 CCA. Location: [#LOC].	$536
1400-0042	Jumper studs to be located below driver's side front corner of body (or pump module if equipped). Studs to face outboard.	$206
1400-0043	Jumper studs to be located below driver's side front corner of body. Studs to face outboard.	$206
1400-0046	Heater pads for (5) Group 31 battery system. Wire pads to winterization shoreline receptacle.	$1,136
1400-0047	Battery six group 31 1000 CCA. For use with 67.5"/80" cab with 10G DEF under driver side of cab.	$2,241
1400-0048	Battery five group 31 1000 CCA (two left / three right).	$1,207
1400-0049	Battery six group 31 1000 CCA with post terminals. For use with 67.5"/80" cab with 10G DEF under driver side of cab.	$2,743
1510-0000	Seat cavity cover (EA).	$168
1510-0035	Universal air pack bottle bracket (EA). Location: [#LOC].	$147
1510-0038	Driver seat 911 air ride.	$902

1510-0039	Driver seat to be 911 air ride with SCBA back	$1,072
1510-0040	Officer seat to be 911 air ride	$902
1510-0041	Officer seat 911 air ride SCBA.	$1,072
1510-0042	Officer seat to be 911 fixed SCBA.	$876
1510-0043	Driver seat to be Bostrom air ride.	$998
1510-0044	Driver seat to be Bostrom air ride with SCBA back	$1,158
1510-0045	Officer seat to be Bostrom air ride.	$998
1510-0046	Officer seat to be Bostrom air ride SCBA.	$1,158
1510-0047	Officer seat to be Bostrom fixed SCBA.	$970
1510-0048	Driver seat to be 911 electric.	$1,346
1510-0049	Driver seat to be Bostrom electric.	$1,439
1510-0050	Rear facing 911 seat with SCBA driver's side.	$753
1510-0051	Engine cover 911 one man bench with SCBA	$987
1510-0052	Engine cover 911 two man bench with SCBA.	$1,666
1510-0053	Rear facing 911 seat with SCBA officer's side.	$753
1510-0054	Rear facing Bostrom seat with SCBA driver's side.	$725
1510-0055	Engine cover Bostrom one man bench with SCBA	$1,014
1510-0056	Engine cover Bostrom two man bench with SCBA.	$1,688
1510-0057	Rear facing Bostrom seat with SCBA officer's side.	$725
1510-0058	Fold down 911 seat located [#LOC]	$405
1510-0059	Fold down 911SCBA seat located [#LOC].	$894
1510-0060	Fold down Bostrom seat located [#LOC].	$405
1510-0061	Fold down Bostrom SCBA seat located [#LOC].	$840
1510-0062	Two man bench centered on rear wall with 911 SCBA backs. Includes angled corners.	$1,284
1510-0063	Two man bench centered on rear wall with Bostrom SCBA. Includes angled corners.	$1,583
1510-0064	Four man bench centered on rear wall with 911 SCBA	$3,024
1510-0065	Four man bench centered on rear wall with Bostrom SCBA.	$2,784
1510-0066	One man bench centered on rear wall with 911 SCBA	$1,044
1510-0067	One man bench centered on rear wall with Bostrom SCBA	$1,139
1510-0072	Tiller cab seating 911 air ride and flip down training seat.	$963
1510-0076	Bostrom SCBA seats forward facing center of rear wall (PR). Free standing with individual risers on rear wall.	$1,933
1510-0077	Tiller cab seating Bostrom air ride and flip down training seat.	$998
1510-0080	Officer seat to be 911 attendant.	$634
1510-0081	Cab occupant detection seating system. Wired to visual indicator (hazard light). Includes audible alarm. Requires multiplex electrical system.	$4,432
1510-0082	Zico Quic-Hold mechanical air pack bottle bracket for 5" bottle (ea). Model MWAB with adjustable footplate and pull release strap. Location: [#LOC].	$531
1510-0083	911 Attendant seat with individual riser (PR). Locate centered on rear wall.	$2,160
1510-0084	Officer seat to be Bostrom electric	$1,439
1510-0085	Custom logo embroidery (EA). Bostrom seats only. Requires set-up sales code.	$128
1510-0086	Embroidery set-up for Bostrom cab seats.	$656
1510-0087	Center rear wall seats to be mounted approximately 11" apart.	$229
1510-0088	911 SCBA seats forward facing center of rear wall (PR). Free standing mtd on a common seat riser.	$2,019
1510-0089	Tailbone pad for jump seat(s). (Reference print #634894)	$47
1510-0090	One man bench (PR) on rear cab wall with Bostrom SCBA back. Location: driver and officer side outboard.	$1,586
1510-0091	Zico Quic-Hold mechanical air pack bottle bracket (EA). Model QLM-U with adjustable footplate and pull release. Location: [#LOC].	$643
1510-0092	Two man bench centered on rear wall with bench seat style back cushion and angled riser corners.	$1,239
1510-0093	Custom logo embroidery (EA). Seats Inc. seats only. Requires set-up sales code.	$142
1510-0094	Embroidery set-up for Seats Inc. 911 cab seats.	$870
1510-0095	Driver seat Bostrom electric with integral seat belt.	$1,601
1510-0096	Officer seat Bostrom electric with SCBA back with integral seat belt.	$1,907
1510-0097	Rear facing seat driver side Bostrom with SCBA back and integral seat belt.	$812
1510-0098	Rear facing seat officer side Bostrom with SCBA back and integral seat belt.	$812
1510-0099	Rear wall seat Bostrom flip-up with SCBA back and integral seat belt. Location: [#LOC].	$1,126
1510-0100	Padded headrest for fold down jump seat (EA). Not available with rear wall windows.	$118
1510-0101	Driver and officer outboard rear facing seats mounted at 30 degree angle. Includes upper seat belt brkt. adjusted to rear of cab.	$468
1510-0104	911 SCBA seat forward facing center of rear wall. Free standing mtd on seat riser.	$1,012
1510-0105	One man bench (PR) on rear cab wall with Seats 911 SCBA back. Location: driver and officer side outboard.	$1,287
1510-0106	911 SCBA seats forward facing rear wall (PR). Equally spaced with individual risers on rear wall.	$2,019
1510-0116	Fold-down seat located [#LOC].	$403
1510-0117	Bostrom SecureAll mechanical air pack bottle bracket (EA). Location: [#LOC].	$512
1510-0118	Flip-up 911 SCBA seat located [#LOC].	$919
1510-0119	Flip up Bostrom SCBA seat located [#LOC].	$949
1510-0120	Flip up 911 attendant seat located [#LOC].	$1,003
1510-0121	Flip up Bostrom attendant seat located [#LOC].	$1,117
1510-0122	Fold down seat with 911 SCBA back located [#LOC].	$897
1510-0123	Fold down seat with Bostrom SCBA back located [#LOC].	$910
1510-0124	Officer seat fixed Bostrom with SCBA back and integral seat belt.	$941
1510-0126	CrewGuard occupant seating detection system. Display location: [#LOC].	$3,315

1510-0127	Additional CrewGuard display. Location: [#LOC].	$264
1510-0129	Two man bench centered on rear wall with Bostrom SCBA backs for use with ALS provision with side access only. Includes (1) horizontally hinged door on the front of the rear bench seat for access to storage below bench.	$2,001
1510-0130	Flip up Bostrom ABTS attendant seat located [#LOC].	$1,043
1510-0131	Bostrom SecureAll mechanical air pack bottle bracket (EA) for bench / fold-down seat. Location: [#LOC].	$627
1510-0133	Adjust rear facing outboard seats as far inboard as appicable next to engine cover.	$113
1510-0134	Rear wall seat Bostrom air ride Sierra non SCBA. Includes single riser. N/A with outboard rear wall seats. Storage below seat N/A. Location: [#LOC].	$1,323
1510-0135	Arm rest installed on both sides of the seat. Location: [#LOC].	$483
1510-0136	Center rear wall seats to be mounted approximately 5" apart. C2X/T2X only.	$229
1510-0137	Bostrom SCBA seat forward facing center of rear wall. Free standing mtd on seat riser.	$1,021
1510-0138	Two man bench centered on rear wall with (1) 911 SCBA back driver and (1) bench back cushion officer.	$1,128
1510-0144	FlameFighter model 14000 air pack bottle bracket with model 39015 safety strap (EA). Location: [#LOC]	$220
1510-0146	911 AIR SCBA seats forward facing center of rear wall (PR). Free standing with individual risers on rear wall.	$2,901
1510-0147	911 SCBA seats forward facing rear wall (3). Equally spaced with common riser on rear wall. Extended cab with medium doors only.	$3,028
1510-0148	Rear facing 911 attendant seat driver's side.	$634
1510-0149	Rear facing 911 attendant seat officer's side.	$634
1510-0150	Two man bench centered on rear wall with (1) Bostrom SCBA back officer and (1) bench back cushion driver.	$1,427
1510-0153	Bostrom SCBA seats forward facing center of rear wall (PR). Free standing mounted on a common seat riser.	$1,933
1510-0154	Three man bench offset to driver on rear wall with Bostrom SCBA backs for use with ALS provision with officer side access only. Includes provision for rear heaters mounted below bench.	$2,511
1510-0155	Bostrom SCBA seats forward facing rear wall (3). Equally spaced with common riser on rear wall. Extended cab with medium doors only.	$2,841
1510-0185	Rear facing seat center rear engine cover Bostrom with SCBA back and integral seat belt.	$890
1510-0186	Driver and officer outboard rear facing seats mounted at 10 degree inboard angle.	$468
1510-0190	911 SCBA seats forward facing rear wall (3). Equally spaced with common riser on rear wall. Center seat lowered 4". For use with extended LTH aerial cab with medium doors only.	$3,028
1510-0200	Department patch sewn on Bostrom seat (EA). Requires customer supplied department patch for each seat.	$102
1510-0203	Bracket SCBA Lifeguard SmartDock Gen2 restraint system. Location: [#LOC].	$475
1510-0204	Officer seat to be 911 electric SCBA	$1,893
1510-0206	Zico electric hands-free air pack bottle bracket (EA). Model QM-ELB with adjustable footplate. Bracket release will be activated with park brake. Location: [#LOC].	$690
1510-0209	Driver seat to be 911 attendant. Includes forward and aft adjustment.	$634
1510-0210	Two man bench centered on rear wall with bench style back cushion for use with ALS provision with side access only.	$1,656
1510-0211	Driver seat to be Bostrom air ride with integral seat belt.	$1,778
1510-0212	Officer seat to be Bostrom SCBA air ride with integral seat belt.	$2,469
1510-0214	Rear wall seat riser to be raised 4" in height. Includes 2" bench seat cushion thickness reduction for non-vista roofs.	$141
1510-0217	Arm rest rear wall (PR). Located outboard of bench seat on seat support channel.	$406
1510-0226	Officer seat to be Bostrom fixed attendant.	$614
1510-0228	Three man bench center on rear wall with 911 SCBA backs. Includes provision for rear heaters mounted below bench (if equipped).	$2,778
1510-0229	(2) Flip up Bostrom attendant seats with common riser located center on rear wall.	$2,231
1510-0235	Two man bench centered on rear wall with Seats 911 SCBA backs for use with ALS provision. Includes recess for SCBA brackets in wall.	$2,947
1510-0238	Bostrom SCBA seats with integral seat belt forward facing center of rear wall (PR). Free standing mounted on a common seat riser.	$2,107
1510-0240	Driver, officer and rear bench seat riser constructed of diamond plated IPOS (as equipped). Includes diamond plate overlay for rear facing seats.	$316
1510-0243	Two (2) Bostrom SCBA seat backs and a three (3) person bench (no center position).	$2,047
1510-0244	Driver seat Bostrom electric with SCBA back with integral seat belt.	$1,907
1510-0248	Seats Inc 911 SCBA seat forward facing rear wall center. For use with extended cab with side access ALS compartments. Includes pass-thru and rear heater provision (if equipped).	$1,034
1510-0249	Two man bench centered on rear wall with Bostrom SCBA backs for use with ALS provision with side access only or interior side compartments. Includes provision for rear heaters mounted below bench.	$2,001
1510-0252	Location modification of electric seat controls. The controls shall be relocated to the outboard side of the seat as mounted IPO standard location.	$204
1510-0253	Bostrom SecureAll mechanical air pack bottle bracket (EA). SecureAll factory adjusted to accommodate carbon fiber bottle(s) in mounted location(s) as specified. Location: [#LOC].	$512
1510-0254	Bostrom SecureAll mechanical air pack bottle bracket (EA) for bench / fold-down seat. SecureAll factory adjusted to accommodate carbon fiber bottle(s) in mounted location(s) as specified. Location: [#LOC].	$627

1510-0256	Two man bench centered on rear wall Non-SCBA seat backs. (1) Access door on each side/end of riser to store (1) SCBA bottle on each side of riser.	$1,557
1510-0257	Rear facing and forward facng rear cab risers to be extended 2" in height. Vista cabs only.	$450
1510-0258	Zico EZ-LOC mechanical air pack bottle bracket (EA). Model QM-EZL with adjustable top clamp and footplate with center pull release for Bostrom seat. Location: [#LOC].	$565
1510-0259	Driver and officer outboard rear facing seats mounted at 15 degree inboard angle.	$468
1510-0261	911 Attendant seat (PR) on common riser. Locate centered on rear wall.	$2,160
1510-0263	Two man bench centered on rear wall with 911 SCBA backs. Includes square corners.	$1,284
1510-0264	Two man bench centered on rear wall with Bostrom SCBA. Includes square corners.	$1,583
1510-0265	Department patch sewn on 911 seat (EA). Requires customer supplied department patch for each seat.	$102
1510-0267	Two man bench centered on rear wall with Bostrom SCBA backs includes squared corners and separate seat bottoms spaced 6" from each other.	$1,695
1510-0268	Rear facing seat center rear engine cover Bostrom flip-up with SCBA back and integral seat belt.	$1,126
1510-0270	Seatbelt P-clips. Provide on all connector ends of seatbelts.	$182
1510-0272	Driver seat to be Bostrom fixed SCBA. Includes fore and aft adjustment.	$1,056
1510-0273	Four man bench centered on rear wall with (2) Bostrom SCBA inboard and attendant backs outboard.	$2,585
1510-0274	Two man bench centered on rear wall with 911 SCBA backs for use with exterior side access only or interior side compartments. Includes provision for rear heaters mounted below bench.	$2,268
1510-0275	Arm rest installed on the outboard side of the seat. Location: [#LOC].	$244
1510-0276	Face mask storage pouch for Bostom Tanker series SCBA seats (EA).	$86
1510-0277	Driver outboard rear facing seat mounted at 10 degree inboard angle.	$234
1510-0278	Two man bench centered on rear wall with bench style back cushion with 2" extra depth removable bottom cushion with cut-out under cushion and angle corners for use with ALS provision with side access only.	$2,475
1510-0279	ReadyReach seat belt extender. Location: [#LOC].	$80
1510-0280	Rear facing seat driver side rear engine cover Bostrom with SCBA back and integral seat belt.	$890
1510-0281	Driver seat 911Battalion air ride ABTS.	$2,127
1510-0282	Officer seat 911 Battalion ABTS air ride SCBA.	$1,898
1510-0283	Officer seat to be 911Battalion ABTS fixed SCBA.	$990
1510-0284	Rear facing 911 Battalion ABTS seat with SCBA driver's side.	$990
1510-0285	Rear facing 911 Battalion ABTS seat with SCBA officer's side.	$990
1510-0286	Two man bench centered on rear wall with 911 Battalion ABTS SCBA backs. Includes angled corners.	$1,997
1510-0287	Two man bench centered on rear wall with 911 Battalion ABTS SCBA backs. Includes square corners.	$1,997
1510-0288	Flip-up 911 Battalion ABTS SCBA seat located [#LOC].	$1,130
1510-0289	Fold down seat with 911 Battalion ABTS SCBA back located [#LOC].	$1,040
1510-0290	Rear facing 911 Battalion ABTS seat with SCBA on engine cover.	$990
1510-0316	Two man SCBA bench seat riser only with angled corners. No SCBA backs or bottom cushion. For lower storage only.	$1,105
1510-0317	Zico EZ-LOC mechanical air pack bottle bracket (EA). Model QM-EZL-CPR with adjustable top clamp and adjustable footplate with center pull release for 911 seats. Location: [#LOC].	$639
1510-0318	Rear facing Bostrom seat fixed attendant officer's side.	$614
1510-0319	(2) Flip up Bostrom SCBA seats with common riser located center on rear wall.	$2,339
1510-0320	Rear facing USSC Valor ABTS seat with SCBA driver's side. Includes fore and aft slides.	$1,308
1510-0321	Rear facing USSC Valor ABTS seat with SCBA officer's side. Includes fore and aft slides.	$1,308
1510-0322	Flip-up USSC Valor ABTS SCBA seat (PR) forward facing center of rear wall mounted on a common seat riser.	$2,973
1515-0000	Air conditioning aerial ISM/S60. Two roof top condensers, for use with aerials	$6,869
1515-0001	Air Conditioning premium aerial ISM/S60. Two roof top condensers, for use with aerials	$9,052
1515-0002	Air Conditioning ISC/ISL. Radiator mounted condenser	$5,876
1515-0004	Air Conditioning ISM/S60. Single roof top mounted condenser.	$6,105
1515-0005	Air Conditioning premium ISM/S60. Single roof top mounted condenser	$8,226
1515-0006	Air Conditioning filter kit	$252
1515-0007	Air conditioning for Typhoon only	$6,565
1515-0012	Paint air conditioning condenser job color.	$766
1515-0017	Air conditioning for the Typhoon X, CII X and Quest with Cummins ISC/ISL engine and radiator mounted condenser.	$6,374
1515-0018	Air conditioning for the Typhoon X, CII X and Quest with roof top mounted condenser.	$7,445
1515-0019	Air Conditioning lines and fittings wrapped	$402
1515-0020	Well nut fasteners to attach A/C filter to overhead panel	$233
1515-0028	Danhard cooling system for cab medical cabinet. 115v / 12v 13,500 BTU wired to battery charger recept. Includes auto transfer switch. Evaporator to be cabinet mtd and condensor to be roof mtd. Note: System draws up to 12 amps AC.	$5,704
1515-0029	Air conditioning for the TyphoonX, CII X and Quest with Cummins ISC or ISL, roof top mounted condensor.	$7,445
1515-0036	Danhard cooling system. 115v / 12v 13,500 BTU wired to battery charger recept. Includes evaporator enclosure on ceiling centered rear of cab AC. Compressor located on rear engine cover with expanded metal cover painted to match cab interior. Condensor to be officer side roof mounted above canopy area. Note: System draws up to 12 amps AC.	$5,704
1515-0040	Heating and air conditioning cab controls shall be located in the lower center dash panel between driver and officer.	$469

1520-0000	Cyclone II medium cab 58" CA	$53,576
1520-0001	Cyclone II long cab 67.5" CA	$59,188
1520-0003	Typhoon long cab 67.5" CA	$36,002
1520-0004	Typhoon Medium cab 58" CA	$33,562
1520-0005	Cyclone II medium cab three door with rear door on officer's side.	$53,576
1520-0006	Cyclone II long cab three door with rear door on officer's side.	$59,188
1520-0007	Tillerman cab. Heat & A/C and (3) 6" (12VDC) fans ceiling mounted, (1) each rear corner & (1) front left corner. Seat material and color is the same as in the front cab.	$43,463
1520-0008	Cyclone II X medium cab with 58" CA	$51,656
1520-0009	Cyclone II X short cab with 44.5" CA	$55,327
1520-0010	Cyclone II X long cab with 67.5" CA	$57,269
1520-0011	Cyclone II X extended cab with 80" CA	$57,879
1520-0012	Typhoon X long cab with 67.5" CA	$34,081
1520-0013	Typhoon X medium cab with 58" CA	$31,642
1520-0015	Cyclone II X medium cab with ALS provision and 80" CA. Includes exterior hinged ALS doors approx 73" high.	$59,289
1520-0017	Quest long cab with 68" CA	$57,269
1520-0018	Quest medium cab with 58" CA	$51,656
1520-0019	Cyclone II X medium cab with ALS provision, barrier style doors and 80" CA. Includes exterior hinged ALS doors approx 73" high.	$60,035
1520-0020	Quest medium cab with 58" CA and barrier style doors.	$52,403
1520-0021	Typhoon X long cab with 67.5" CA. Includes barrier style doors.	$34,830
1520-0022	Cyclone II X medium cab with 58" CA. Includes barrier style doors.	$52,403
1520-0023	Cyclone II X long cab with 67.5" CA. Includes barrier style doors.	$58,018
1520-0024	Cyclone II X extended cab with 80" CA. Includes barrier style doors.	$58,625
1520-0025	Typhoon X medium cab with 58" CA. Includes barrier style doors.	$32,400
1520-0026	Quest long cab with 68" CA and barrier style doors.	$58,018
1520-0028	Cyclone II X long cab with 67.5" CA. For use with a lowered aerial. Requires full length 4.5" deep trough option.	$64,797
1520-0029	Typhoon X short cab with 44.5" CA	$35,313
1520-0038	Cyclone II X extended cab with 80" CA. For use with a lowered aerial. Requires full length 4.5" deep trough option.	$62,031
1520-0071	Cyclone II X medium cab with 58" CA. For use with a lowered aerial. Requires full length 4.5" deep trough option.	$55,807
1520-0081	Cyclone II X short cab with 44.5" CA and right hand drive.	$69,356
1520-0087	Cyclone II X short cab 2 door with 44.5" ca. Includes transverse compartment at rear of cab above the front axle accessible from both sides. The compartment is approx 48.5" wide x 44.25" high x the width of the cab.	$55,327
1520-0090	Cyclone II X (3) door extended cab with 80" CA. Officer side rear door.	$57,879
1520-0092	Cyclone II X medium cab with 58" CA. Includes barrier style doors. For use with a lowered aerial. Requires full length 4.5" deep trough option.	$56,553
1520-0095	Cyclone II X long cab with 67.5" CA and barrier style doors. For use with a lowered aerial. Requires full length 4.5" deep trough option.	$65,546
1520-0096	Typhoon X extended cab with 80" CA	$37,866
1520-0097	Typhoon X extended cab with 80" CA. Includes barrier style doors.	$38,615
1520-0104	Cyclone II X (3) door extended cab with 80" CA. Includes barrier style doors. Locate rear door on Officer side of cab.	$59,797
1520-0107	Quest long cab with 68" CA. (QST2)	$68,876
1520-0108	Quest extended cab with 80" CA. (QST2)	$69,486
1520-0109	Quest medium cab with 58" CA and barrier style doors. (QST2)	$64,009
1520-0114	Typhoon X medium cab with ALS provision, barrier style doors and 80" CA. Includes exterior hinged ALS doors approx 73" high.	$40,023
1520-0115	Quest medium cab with ALS provision and 80" CA (QST2). Includes exterior hinged ALS doors approx 73" high.	$70,896
1520-0122	Typhoon X medium cab with ALS provision and 80" CA. Includes exterior hinged ALS doors approx 73" high.	$39,278
1535-0002	Driver side cab wheel well medical cabinet approximately 42 x 22 (25 Quest) x 28. Includes external locking roll-up door and interior hinged door with locking push-button latch. Cabinet includes (2) adjustable shelves.	$1,967
1535-0003	Officer side cab wheel well medical cabinet approximately 42 x 22 (25 Quest) x 28. Includes external locking roll-up door and interior hinged door with locking push-button latch. Cabinet includes (2) adjustable shelves.	$1,967
1535-0004	Medical cabinet mounted on rear wall of cab 48 x 32 x 24 with a locking roll up door. Lower door opening raised to provide hand clearance.	$4,077
1535-0005	Medical cabinet mounted on rear wall of cab 48 x 40 x 20 with locking roll up door. Lower door opening raised to provide hand clearance.	$3,833
1535-0006	Medical cabinet mounted on rear wall of cab 55X32X19 with a locking roll up door. Lower door opening raised to provide hand clearance.	$2,614
1535-0007	Medical cabinet mounted on rear wall of cab 55 x 40 x 20 with a locking roll up door. Lower door opening raised to provide hand clearance.	$3,260
1535-0012	Medical cabinet mounted on the wheel well driver side of cab 45H x 21W x 24D with a locking roll-up door.	$2,447
1535-0013	Medical cabinet mounted on the wheel well officer side of cab 45H x 21W x 24D with a locking roll-up door.	$2,447

1535-0028	Cab medical storage cabinet(s) finish to be swirled with clear coating.	$1,165
1535-0030	All roll-up medical cabinet doors selected on the cab to be ROM brand.	$128
1535-0032	All medical cabinet RUD in the cab to be locking with 1250 key	$133
1535-0034	All exterior access RUD for medical cabinets to be painted job color. Not available on two tone cabs.	$245
1535-0035	Engine compartment light, LED (EA).	$230
1535-0037	Rear cab wall medical cabinet with side access doors (one each side). Cabinet to be 50" high x 38" wide x 24" deep. Includes (2) locking roll-up doors (satin finish) and (3) adjustable shelves. Lower door openings raised to provide hand clearance.	$2,969
1535-0038	Interior medical cabinet. Locate to rear of engine cover. Cabinet to be 30" high x 38" wide x 20" deep with a locking roll up door. Includes (1) adjustable shelf.	$3,043
1535-0043	Medical cabinet mounted on rear wall of cab 48X32X24 with a locking roll up door and windows in door slats. Lower door opening raised to provide hand clearance.	$4,365
1535-0045	ALS interior - Style "A". Includes forward wall with center locking roll-up door for access from int, small compts up high ea side of ctr opening with glove box latch on driver's side compt and Medco keyed lock on officer's side, strikers high and low on ALS doors, access plts on int panel of ALS doors, approx 5"W x 17"H x 70"L backboard sleeve, two adj shelves ahead of backboard sleeve and a roll-out tray with 36" slides each side on floor.	$8,507
1535-0046	Medical cabinet mounted on rear wall of cab 60X40X23 with a locking roll up door. Lower door opening raised 12" to provide area for rear heaters. Includes lower ventilation, front access and removable sub-floor for additional access.	$3,093
1535-0047	Medical cabinet mounted on the officer side rear cab wall 55(54 non-vista)X18X12 with a locking roll up door. Lower door opening raised to provide hand clearance.	$2,465
1535-0048	Medical cabinet mounted on the driver side rear cab wall 55(54 non-vista)X18X12 with a locking roll up door. Lower door opening raised to provide hand clearance.	$2,465
1535-0049	Louvers for interior medical/ ALS cabinet wall(s) to help cabinet contents to maintain cab interior temperatures. The louvers to be in four sets of three, located two high and two low. Location: [#LOC].	$171
1535-0052	Medical cabinet mounted on rear wall of cab 52" x 40" x 23" with a locking roll up door. Lower door opening raised 4" to provide area for radio installation. Includes lower ventilation and removable sub-floor for additional access.	$3,093
1535-0054	Exterior access roll up doors for medical cabinets to be painted upper cab color.	$245
1535-0057	Driver side cab wheel well medical cabinet approximately 42 x 22 (25 Quest) x 28. Includes external locking pan door painted job color and interior hinged full height door with locking push-button latch. Cabinet includes (2) adjustable shelves.	$2,359
1535-0058	Medical cabinet mounted on rear wall of cab 48X42X20 with angled corners and locking roll up door. Lower door opening raised to provide hand clearance.	$3,833
1535-0059	Brace .75 x 2.75 below medical cabinet shelf	$85
1535-0060	Rear cab wall medical cabinet with side access doors (one each side). Cabinet to be 62" high x 38" wide x 24" deep. Includes (2) locking roll-up doors (satin finish) and (3) adjustable shelves. Lower door openings raised to provide hand clearance.	$3,199
1535-0061	Driver side cab wheel well medical cabinet approximately 42x22(25 Quest)x28. Includes external locking pan door painted job color and interior locking roll-up door with satin finish. Cabinet includes (2) adjustable shelves.	$2,589
1535-0062	Interior medical cabinet. Locate to rear of engine cover. Cabinet to be 30" high x 38" wide x 20" deep with a locking roll up door. Includes (1) adjustable shelf and forward facing drop down door.	$3,131
1535-0063	Officer side cab wheel well medical cabinet approximately 42x22(25 Quest)x28. Includes external locking single door painted job color and interior hinged door with locking push-button latch. Cabinet includes (2) adjustable shelves.	$2,359
1535-0064	Rear cab wall medical cabinet with side access doors (one each side). Cabinet to be 48" high x 38" wide x 24" deep. Includes (2) locking roll-up doors (satin finish) and (3) adjustable shelves. Lower door openings raised to provide hand clearance.	$2,969
1535-0066	Interior medical cabinet. Locate to lower rear of engine cover. Cabinet to be 32" high x 30" wide x 24" deep with single pan double bi-fold doors. Includes (1) vertical and (1) horizontal partition centered in the cabinet, louvered lower side walls and removable lower rear facing panel for installation of heaters.	$3,074
1535-0067	ALS - Side access. Includes compts on each side of cab, access up high each side of interior outboard with glove box latches, strikers high and low on ALS doors (CIIX/TyphoonX only), access plts on int panel of ALS doors (CIIX/TyphoonX only), extended cab floor and three adj shelves.	$3,394
1535-0068	Rear wall medical cabinets. Includes forward wall and (2) full height, equal width locking roll-up door compts with (3) shelves in each compt.	$9,301
1535-0069	Rear cab wall medical cabinet with side access doors (one each side). Cabinet to be 50" high x 30" wide x 24" deep. Includes (2) locking roll-up doors (satin finish) and (3) adjustable shelves. Lower door openings raised to provide hand clearance.	$2,969
1535-0070	Riser for medical cabinet. Lifts bottom of cabinet up to top of rear wall seat support. Front of riser to be closed, sides to be open. CII X / Typhoon X only.	$683
1535-0071	ALS interior - Style "A". Includes forward wall with center locking roll-up door for access from int, small compts up high ea side of ctr opening with glove box latch on driver's side compt and Medco keyed lock on officer's side, strikers high and low on ALS doors, access plts on int panel of ALS doors, approx 5"W x 17"H x 70"L backboard sleeve, two adj shelves ahead of backboard sleeve and a roll-out tray with 36" slides each side on floor. HCFD.	$18,441
1535-0072	Rear cab wall medical cabinet with side diamond plate access doors (one each side) mounted above support channel on back wall. Cabinet to be 38" high x 47.25" wide x 14" deep. Includes diamond plate doors hinged to the rear with d-ring latches and (2) adjustable shelves.	$2,969

1535-0073	Officer side cab wheel well medical cabinet approximately 42 x 22 (25 Quest) x 28. Includes external locking pan door painted job color and interior hinged full height door with locking push-button latch. Cabinet includes (2) adjustable shelves.	$2,359
1535-0074	All medical cabinet RUD in the cab to be locking with CH751 key.	$133
1535-0075	Driver side cab wheel well medical cabinet approximately 42x22(25 Quest)x28. Includes external locking roll-up door and interior hinged door with locking push-button latch. Cabinet includes (1) adjustable partition installed and (2) adjustable shelves shipped loose in the cabinet.	$2,077
1535-0076	Driver side cab wheel well medical cabinet approximately 42x22(25 Quest)x28. Includes external pan door with locking Tri-Mark latch painted job color and interior full height hinged door with locking push-button latch. Cabinet includes (2) adjustable shelves.	$2,510
1535-0077	Officer side cab wheel well medical cabinet approximately 42x22(25 Quest)x28. Includes external pan door with locking Tri-Mark latch painted job color and interior full height hinged door with locking push-button latch. Cabinet includes (2) adjustable shelves.	$2,510
1535-0078	Interior medical cabinet. Locate to rear of engine cover. Cabinet to be 25.5" high x 30" wide x 23" deep with (2) drop down doors.	$1,015
1535-0079	All roll-up medical cabinet doors selected on the cab to be Amdor brand.	$128
1535-0080	Officer side cab wheel well medical cabinet approximately 42x22(25 Quest)x28. Includes external locking roll-up door. Cabinet includes (2) adjustable shelves.	$1,760
1535-0081	Driver side cab wheel well medical cabinet approximately 42x22(25 Quest)x28. Includes external locking roll-up door. Cabinet includes (2) adjustable shelves.	$1,760
1535-0082	11"H x 18"W access opening with cargo net cover on driver and officer side wheel well medical cabinets back wall(engine cover side)up high. Includes deflector plate on ceiling to protect roll-up door.	$761
1535-0085	Rear cab wall medical cabinet with side access doors (one each side). Cabinet to be 36" high x 38" wide x 24" deep. Includes (2) roll-up doors (satin finish) and (2) adjustable shelves. Lower door openings raised to provide hand clearance.	$2,969
1535-0086	Driver and officer side cab wheel well medical cabinet approximately 17x23x28. Includes internal locking vertically hinged door. Quest cabs only.	$1,323
1535-0088	Riser for medical cabinet. Approx 40"W x 20"D x 17"H. Front of riser to have a drop down door with two locking latches. Finish to match medical cabinet.	$888
1535-0090	Medical cabinet mounted on rear wall of cab 48X40X23 with a locking roll up door. Lower door opening raised 4" to provide area for radio installation. Includes lower ventilation and removable sub-floor for additional access.	$3,093
1535-0091	Officer side cab wheel well medical/communication cabinet approximately 42x22(25 Quest)x28. Includes external half height locking pan door with Tri-Mark latch painted job color and interior full height opening with cargo netting. Cabinet includes (3) adjustable interior pull-out shelves.	$3,103
1535-0092	Driver side cab wheel well medical/communication cabinet approximately 42x22(25 Quest)x28. Includes external half height locking pan door with Tri-Mark latch painted job color and interior full height opening with cargo netting. Cabinet includes (3) adjustable interior (4) sided trays with 1" lips.	$3,103
1535-0093	Compartment rear side of cab "under riser" type. Approx 22W x 30H opening. Includes double pan hinged door with Tri-Mark locking latches and pass through to bench if equipped. Location: driver and officer side.	$1,281
1535-0094	Driver side cab wheel well medical cabinet approximately 42x22(25 Quest)x28. Includes external pan door with locking Tri-Mark latch painted job color and interior full height opening with cargo net cover. Cabinet includes (2) adjustable shelves.	$2,666
1535-0095	Officer side cab wheel well medical cabinet approximately 42x22(25 Quest)x28. Includes external pan door with locking Tri-Mark latch painted job color and interior full height opening with cargo net cover. Cabinet includes (2) adjustable shelves.	$2,666
1535-0096	Exterior access roll up door for medical cabinet to be painted two-tone to match cab paint break (EA).	$416
1535-0097	Medical cabinet mounted on the wheel well officer side of cab 15.5X24X21 with a vertically hinged door and locking push-button latch.	$976
1535-0100	Medical cabinet mounted on the driver side rear cab wall 55X28X12 with a locking roll up door. Lower door opening raised 12" to provide space for rear heater. Includes lower ventilation, front access and removable sub-floor for additional access.	$2,788
1535-0101	Medical cabinet mounted on the officer side rear cab wall 55X28X12 with a locking roll up door. Lower door opening raised 12" to provide space for rear heater. Includes lower ventilation, front access and removable sub-floor for additional access.	$2,788
1535-0102	Medical cabinet - ALS style side access. Includes compt on officer side of cab, access up high on interior with glove box latch, extended cab floor and three adj shelves. Includes pass-thru under bench seat riser if equipped.	$2,404
1535-0105	Medical cabinet mounted on the officer side rear cab wall 55(54 non-vista)X18X12 with a locking roll up door. Lower door opening raised approx. 12" to provide space for rear wall heaters. Includes slots and false floor.	$2,465
1535-0106	Medical cabinet mounted on the driver side rear cab wall 55(54 non-vista)X18X12 with a locking roll up door. Lower door opening raised approx. 12" to provide space for rear wall heaters. Includes slots and false floor.	$2,465
1535-0110	Medical cabinet mounted on the driver side rear cab wall 55(54 non-vista)X20X22 with a locking satin finish roll-up door and (3) adjustable shelves.	$2,580
1535-0111	Medical cabinet mounted on the officer side rear cab wall 55(54 non-vista)X20X22 with a locking satin finish roll-up door and equipment rack.	$2,580
1535-0112	Officer side cab wheel well medical cabinet approximately 42x22(25 Quest)x28. Includes external locking pan door painted job color and interior locking roll-up door with satin finish. Cabinet includes (2) adjustable shelves.	$2,589

1535-0114	Medical cabinet mounted on the wheel well driver side of cab 44HX21WX16D with a locking roll up door.	$2,374
1535-0118	Medical cabinet mounted on rear wall of cab 50X38X12 with locking roll up door. Lower door opening raised to provide hand clearance.	$3,756
1535-0119	Medical cabinet mounted on rear wall of cab 55X40X23 with a locking roll up door. Cabinet floor to be level with top of PTO box on cab floor.	$3,093
1535-0120	Medical cabinet mounted on the officer side rear cab wall full height (as applicable)X 18W X 12D with a locking roll up door. For use with vista cabs only. Lower door opening raised to provide hand clearance.	$2,570
1535-0121	Medical cabinet mounted on rear wall of cab full height (as applicable)X55X22 with locking roll up door. For use with vista cabs only. Lower door opening raised to provide hand clearance.	$4,145
1535-0122	Medical cabinet mounted on the driver side rear cab wall full height (as applicable)X 18W X 12D with a locking roll up door. For use with vista cabs only. Lower door opening raised to provide hand clearance.	$2,570
1535-0124	Medical cabinet mounted on the driver side rear cab wall 55(54 non-vista)X20X22 with a locking satin finish roll-up door and (3) adjustable shelves. Includes lower area raised to accomodate rear wall heater.	$2,582
1535-0125	Medical cabinet mounted on the officer side rear cab wall 55(54 non-vista)X20X22 with a locking satin finish roll-up door, (1) adjustable shelvf and equipment rack. Includes lower area raised to accomodate rear wall heater.	$2,582
1535-0126	Medical cabinet mounted on the wheel well driver side of cab 32H x 21W x 24D with a interior hinged full height door with locking push-button latch; hinged inboard.	$2,083
1535-0127	Louvers for rear wall bench seat riser to help cabinet contents to maintain cab interior temperatures. The louvers to be in three sets of three, located low on forward wall.	$171
1535-0128	ALS - Side access. Includes compts on each side of cab, 16Wx20H access up high each side of interior outboard with locking glove box latches, strikers high and low on ALS doors, access plts on int panel of ALS doors, extended cab floors, smooth plate rear kick plates, one adj shelf and nylatron floor overlay. Includes pass-thru under bench seat if equipped.	$3,394
1535-0129	Reverse hinge driver and officer side ALS compartment door. Includes vertically mounted drip rail along forward area of compartment opening (in addition to the horizontal drip rail above the door opening; CIIX and TyphoonX cabs only). Doors to open approx. 110 degrees.	$147
1535-0130	Driver side cab wheel well medical cabinet approximately 42 x 22 (25 Quest) x 28. Includes external locking roll-up door and interior hinged door with locking push-button latch; hinged outboard. Cabinet includes (2) adjustable shelves.	$1,967
1535-0131	Driver side cab wheel well medical cabinet approximately 42 x 24 (27 Quest) x 28. Includes external locking roll-up door and interior hinged door with locking push-button latch. Cabinet includes (2) adjustable shelves.	$1,967
1535-0132	Officer side cab wheel well medical cabinet approximately 42 x 24 (27 Quest) x 28. Includes external locking roll-up door and interior hinged door with locking push-button latch. Cabinet includes (2) adjustable shelves.	$1,967
1535-0133	Cab medical/storage cabinet(s) interior finish to be Zolatone gray.	$352
1535-0135	Driver side cab wheel well medical cabinet approximately 42 x 22 (25 Quest) x 28. Includes external locking roll-up door and interior hinged smoked lexan door with locking push-button latch. Cabinet includes (2) adjustable shelves.	$2,019
1535-0136	Rear cab wall medical cabinet with front and side access doors (one each side). Cabinet to be 42" high x 30" wide x 32" deep (do not notch for support bracket; customer to store backboard(s) above support channel behind cabinet; install mounting bracket above cabinet). Includes (1) locking lower horizontally hinged plate door on front located below roll-up door drums, (2) locking side roll-up doors (satin finish) and (2) adjustable shelves. Lower door openings raised to provide hand clearance.	$3,281
1535-0137	Medical cabinet mounted on the wheel well driver side of cab 45H x 21W x 24D with a locking roll-back (bread box) door.	$2,447
1535-0138	Lock box mounted in the driver side wheel well medical cabinet floor. 14X21X20 with a locking horizontally hinged door. Finish will match interior of cab.	$577
1535-0139	ALS interior with backboard and stokes basket storage. Includes forward wall with (2) outboard locking roll-up doors for access from int, (3) compts up high with glove box latches, strikers high and low on ALS doors, access plts on int panel of ALS doors, (2) approx 5"W x 17"H x 70"L backboard sleeves and stokes basket storage below backboard sleeves on floor.	$9,233
1535-0140	Medical cabinet mounted on the officer side rear cab wall 55(54 non-vista)X18X12 with a locking full height door hinged inboard.	$2,258
1535-0141	Medical cabinet mounted on the driver side rear cab wall 55(54 non-vista)X18X12 with a locking full height door hinged inboard.	$2,258
1535-0143	Lock box mounted on top of the rear wall medical cabinet. 14HX18WX12D with a locking horizontally hinged drop down door. Finish will match interior of cab.	$577
1535-0145	ALS - Side access. Includes compts on each side of cab, strikers high and low on exterior doors, access plts on int panel of exterior doors, full height satin finish Amdor roll-up doors on interior, extended cab floor and three adj shelves.	$4,977
1535-0147	Officer side cab wheel well medical/communication cabinet approximately 42x22(25 Quest)x28. Includes external half height locking pan door with Tri-Mark latch painted job color and interior full height opening with cargo netting. Cabinet includes (1) adjustable shelf.	$2,955
1535-0148	All medical cabinet RUD in the cab to be locking with GEM key lock	$133

1535-0149	Officer side cab wheel well medical cabinet approximately 42x24x28. Includes external locking pan door painted job color and raised boxed interior locking roll-up door with satin finish for a 42" opening. Cabinet includes (2) adjustable shelves. Requires vista cab roof and removal of side windows.	$2,793
1535-0150	Medical cabinet mounted on the wheel well officer side of cab 45H x 21W x 24D with a interior hinged full height door with locking push-button latch; hinged inboard.	$2,083
1535-0153	Medical cabinet mounted on rear wall of cab 48 x 36 x 20 with a locking roll-back (bread box) door.	$3,833
1535-0154	Medical cabinet mounted on the wheel well driver side of cab 45H x 21W x 24D with a interior hinged full height door with locking push-button latch; hinged inboard.	$2,083
1535-0155	Medical cabinet mounted on the wheel well driver side of cab 45H x 21W x 24D with a locking roll-up door and (2) adjustable shelves.	$2,447
1535-0156	Medical cabinet rear engine cover, bolted to forward facing map box approximately 34Wx25Hx18D. To include one (1) adjustable shelf. Two (2) vertically hinged swing out doors shall allow access (to the rear), the doors shall be raised 6" up from the cabinet's base. The cabinet shall include push-button latching, (2) each door (1) top and (1) bottom.	$1,368
1535-0157	ALS - Side access. Includes compts on each side of cab, strikers high and low on exterior doors, access plts on int panel of exterior doors, satin finish ROM roll-up doors on interior (bottom raised to riser height), extended cab floor and three adj shelves	$5,181
1535-0158	Locking interior medical cabinet plate door (PR). Key type to be 1250.	$147
1535-0159	Medical cabinet mounted on the wheel well officer side of cab 22X21X28 with a vertically hinged door and locking push-button latch.	$976
1535-0160	ALS - Side interior cabinets. Includes full height access doors (raised for heaters if equipped) each side of interior outboard with glove box latches and three adj shelves.	$3,394
1535-0162	Officer side cab wheel well medical cabinet approximately 42 x 24 (25 Quest) x 28. Includes external locking roll-up door and interior cargo net access. Cabinet includes (2) adjustable shelves.	$2,018
1535-0163	Driver side cab wheel well medical cabinet approximately 42 x 24 (25 Quest) x 28. Includes external locking roll-up door and interior cargo net access. Cabinet includes (2) adjustable shelves.	$2,018
1535-0166	The bottom of the medical cabinet(s) within the cab shall have stainless steel trim at the bottom. This kick plate trim shall be 4" in height from the floor and shall be trimmed as required for door opening(s) below 4".	$394
1535-0167	Compartment rear side of cab below floor. Approx 9W x 19.5H opening. Includes double pan hinged doors. Long cab with medium door location only. Location: driver and officer side.	$904
1535-0169	Medical cabinet mounted on rear wall of cab 55X38X16 with a locking roll up door. Lower door opening raised to provide hand clearance.	$3,093
1535-0172	Rear cab wall medical cabinet to be 50" high x 38" wide x 24" deep. Includes (1) forward facing locking roll-up door (satin finish) and (3) adjustable shelves. Lower door openings raised to provide hand clearance.	$2,969
1535-0173	ALS - Side access. Includes compartments on each side of cab, strikers high and low on exterior doors. Includes access plates on interior panel of exterior doors, satin finish ROM roll-up doors on interior (bottom raised to riser height), extended cab floor and three adjustable shelves. Cabinet Includes transverse riser with backboard storage. The interior riser jets/protrudes forward between side wall ALS cabinets to allow heaters (if so equipped) not interfere or impede upon transverse storage/ pass-thru of backboards and other equipment stored under the riser in the transverse storage area.	$5,567
1535-0174	ALS door locks - electric. Electric lock for hinged ALS doors. Wire to same electric lock system as other cab doors.	$911
1535-0175	Medical cabinet mounted on rear wall of cab 49 x 40 x 25.5. Side access lower section with cargo net and notch upper forward access with discrete compartment. Includes drop down door.	$3,326
1535-0176	Medical cabinet mounted on rear wall of cab approximately 48 x 38 x 20 with locking roll up door. Lower door opening raised to provide hand clearance. Required with rear outboard fold down seat(s).	$3,833
1535-0177	Compartment rear side of cab "under riser" type. Approx 9W x 30H opening. Includes double pan hinged door and pass through to bench if equipped. Long cab with medium door location only. Location: driver and officer side.	$904
1535-0181	Upper rearward center vista area cabinet. Cabinet to be 48W x Vista Height x 12D. Includes horizontally hinged lift-up door.	$884
1535-0182	Officer side cab wheel well medical cabinet approximately 42 x 24 (27 Quest) x 28. Includes external locking roll-up door and interior cargo net access. Cabinet includes (2) adjustable shelves.	$2,018
1535-0183	Driver side cab wheel well medical cabinet approximately 42 x 24 (27 Quest) x 28. Includes external locking roll-up door and interior cargo net access. Cabinet includes (2) adjustable shelves.	$2,018
1535-0184	Medical cabinet mounted on rear wall of cab 55 x 38 x 20 with a locking roll up door. Lower door opening raised to provide hand clearance.	$3,260
1535-0186	Medical cabinet mounted on rear wall of cab 48 x 40 x 17 with locking roll up door. Lower door opening raised to provide hand clearance.	$3,833
1535-0187	Driver side cab wheel well medical cabinet approximately 42 x 24 (25 Quest) x 28. Includes external locking roll-up door and interior hinged door with locking push-button latch. Cabinet includes (2) adjustable shelves.	$1,967
1535-0188	Officer side cab wheel well medical cabinet approximately 42 x 24 (25 Quest) x 28. Includes external locking roll-up door and interior hinged door with locking push-button latch. Cabinet includes (2) adjustable shelves.	$1,967
1535-0190	All shelves within the medical cabinet(s) shall have the a full perimeter lip IPOS.	$60
1535-0191	All exterior access RUD for medical cabinets to be painted [#COL].	$245

1535-0192	The interior medical cabinet shall include stainless steel trim on the vertical corner of the cabinet where the hinge is attached. The trim shall run full height of the cabinet on this corner. The trim shall be 1" x 1" to protect and dress off this single corner's edge.	$199
1535-0193	Medical cabinet mounted on the wheel well officer side of cab 15.5X24X21 with rear facing cargo netting.	$976
1535-0194	Driver side cab wheel well medical cabinet approximately 42 x 22 (25 Quest) x 28. Includes external locking roll-up door and interior hinged door with locking push-button latch.	$1,763
1535-0195	Officer side cab wheel well medical cabinet approximately 42 x 22 (25 Quest) x 28. Includes external locking roll-up door and interior hinged door with locking push-button latch.	$1,763
1535-0196	Interior medical cabinet. Locate to rear of engine cover. Cabinet to be 27" high x 38" wide x 20" deep with a locking roll up door. Includes (1) adjustable shelf and forward facing drop down door.	$3,131
1535-0197	Driver side cab wheel well medical cabinet approximately 42x22(25 Quest)x28. Includes external lift-up pan door with locking Tri-Mark latch painted job color, pull strap for door and interior full height opening with cargo net cover. Cabinet includes (2) adjustable shelves.	$3,007
1535-0198	Officer side cab wheel well medical cabinet approximately 42x22(25 Quest)x28. Includes external lift-up pan door with locking Tri-Mark latch painted job color, pull strap for door and interior full height opening with cargo net cover. Cabinet includes (2) adjustable shelves.	$3,007
1535-0199	Officer side cab wheel well medical cabinet approximately 42x22(25 Quest)x28. Includes external locking pan door painted job color and interior cargo net.	$2,515
1535-0200	Driver side cab wheel well medical cabinet approximately 42x22(25 Quest)x28. Includes external locking pan door painted job color and interior cargo net.	$2,515
1535-0205	Medical cabinet centered on the rear wall of the cab to be 74" wide X 62" tall. The center section on the cabinet will be 22" deep X 25" wide. At the outside edges of the 25" wide section of the cabinet will angle back until it is 10" deep at the outer most point on both sides. The cabinet is to be split into 3 separate sections with each section having (2) adjustable shelves and a locking ROM roll-up doors. Lower door opening raised to provide hand clearance.	$6,951
1535-0206	Additional medical cabinet shelf. Location: (2) driver and (2) officer side medical cabinets.	$142
1535-0208	Driver side cab wheel well medical cabinet approximately 42x22(25 Quest)x28. Includes external locking pan door painted job color.	$2,100
1535-0210	Officer side cab wheel well medical cabinet approximately 42 x 22 (25 Quest) x 28. Includes external locking roll-up door, no interior access. Cabinet includes (2) adjustable shelves.	$1,904
1535-0211	Medical cabinet mounted on the wheel well driver side of cab 42H x 21W x 24D with a locking roll-up door. For use with LTA cabs.	$2,447
1535-0212	Medical cabinet mounted on the officer side rear cab wall full height (as applicable)X 18W X 12D with a locking roll up door. For use with vista cabs only. Lower door opening raised to provide hand clearance.	$2,570
1535-0213	Medical cabinet mounted on the driver side rear cab wall full height (as applicable)X 18W X 12D with a locking roll up door. For use with vista cabs only. Lower door opening raised to provide hand clearance.	$2,570
1535-0214	Driver side cab wheel well medical cabinet approximately 42 x 22 (25 Quest) x 28. Includes external locking roll-up door (no interior door).	$1,749
1535-0215	Rear cab wall medical cabinet with side access doors (one each side). Cabinet to be 50" high x 38" wide x 24" deep. Includes (2) locking roll-up doors (satin finish) and (2) adjustable shelves. Lower door openings raised to provide hand clearance.	$2,940
1535-0216	Filler panel above medical cabinet, (3) sided with finish to match other medical cabinet(s). This panel shall dress off the gap between the top of the cabinet and the ceiling.	$244
1535-0217	Officer side cab wheel well medical cabinet approximately 42 x 24 (27 Quest) x 28. Includes external locking roll-up door, no interior access. Cabinet includes (2) adjustable shelves.	$1,967
1535-0218	Driver side cab wheel well medical cabinet approximately 42 x 24 (27 Quest) x 28. Includes external locking roll-up door, no interior access. Cabinet includes (2) adjustable shelves.	$1,967
1535-0219	Driver side cab wheel well medical cabinet approximately 42x22(25 Quest)x28. Includes external pan door with locking Tri-Mark latch painted job color and interior locking roll-up door with satin finish. Cabinet includes (2) adjustable shelves.	$2,589
1535-0220	Officer side cab wheel well medical cabinet approximately 42x22(25 Quest)x28. Includes external pan door with locking Tri-Mark latch painted job color and interior locking roll-up door with satin finish. Cabinet includes (2) adjustable shelves.	$2,589
1535-0221	Rear cab wall medical cabinet with side access on each side using black cargo netting. Cabinet to be 45" wide X 16"deep X full height (as applicable). Includes cabinet front access door using a smooth plate vertically hinged double door with thumb latches and (3) adjustable shelves. The cabinet will not be notched around rear wall channel.	$2,901
1535-0222	Driver side cab wheel well medical cabinet approximately 42 x 22 (25 Quest) x 28. Includes external locking pan door painted job color. Cabinet includes (2) adjustable shelves.	$2,359
1535-0223	Officer side cab wheel well medical cabinet approximately 42 x 22 (25 Quest) x 28. Includes external locking pan door painted job color. Cabinet includes (2) adjustable shelves.	$2,359
1535-0224	Lock box mounted in the driver side wheel well medical cabinet floor. 8X21X20 with a locking horizontally hinged door. Finish will match interior of cab.	$577
1535-0225	Special medical cabinet on rear wall. Includes lower side access only with (2) adjustable shelves with 1" lips all the way around, upper front area with drop down door (approx. 12H x 35W opening) with (2) non-locking push buttons and louvers for compartment, lower sides open with cargo nets attached with clips in lieu of snaps.	$3,043
1535-0226	Rear cab wall medical cabinet with side access. Cabinet to be 32" high x 32" wide x 24" deep. Includes (2) black cargo nets and (1) adjustable shelf.	$2,121
1535-0227	Additional medical cabinet shelf. Location: rear wall medical cabinet.	$142

1535-0228	ALS side access with full height exterior doors. Includes strikers high and low on ALS doors, access plts on int panel of ALS doors, (2) horizontal backboard sleeves approx 12" above floor accessed from officer side, (2) stair chair sleeves above backboards accessed from officer side and (2) stokes backets sleeves above stair chairs accessed from both sides.	$8,294
1535-0229	Medical cabinet mounted on rear wall of cab 55 x 40 x 15 with a locking roll up door. Lower door opening raised to provide hand clearance.	$3,111
1535-0230	Lock box in rear wall medical cabinet; floor mounted. 12H X FW X 12D with a locking horizontally hinged drop down door. Finish will match interior of cab.	$577
1535-0232	Reverse hinge driver and officer side exterior medical cabinet compartment door. Includes vertically mounted drip rail along forward area of compartment opening (in addition to the horizontal drip rail above the door opening).	$147
1535-0234	Driver side cab wheel well medical cabinet approximately 42x22(25 Quest)x28. Includes external locking pan door painted job color. No shelves provided.	$2,100
1535-0236	Compartment rear side of cab "under riser" type. Approx 9W x 30H opening. Includes single pan hinged door with 1/4 turn d-ring handles and pass through to bench if equipped. Long cab with medium door location only. Location: driver and officer side.	$904
1535-0239	ALS side transverse access. Includes strikers high and low on ALS doors, access plts on int panel of ALS doors, (2) equally spaced vertical paritions up high for backboard sleeves/shovel/misc, (1) floor mounted SlideMaster bi-directional tray and (1) transverse adjustable shelf between tray and upper storage. Includes extended floor(s).	$4,911
1535-0240	Medical cabinet mounted on rear wall of cab full height (as applicable)X40X20 with locking roll up door. For use with vista cabs only. Lower door opening raised to provide hand clearance.	$4,145
1535-0242	Driver side cab wheel well medical cabinet approximately 42 x 22 (25 Quest) x 28. Includes external locking pan door painted job color with Tri-Mark latch. Cabinet includes (1) adjustable shelf.	$2,336
1535-0243	Officer side cab wheel well medical cabinet approximately 42 x 22 (25 Quest) x 28. Includes external locking pan door painted job color with Tri-Mark latch. Cabinet includes (1) adjustable shelf.	$2,336
1535-0247	Interior medical cabinet. Locate to rear of engine cover. Cabinet to be 22" H x 45" W x 20" D. Cabinet to be open rear with 1" lower lip and a cargo net style cover over rear opening. Inlcudes (1) adjustable shelf.	$1,163
1535-0248	Interior medical cabinet. Locate to rear of engine cover. Cabinet to be 20.75" H x 45" W x 22" D. Cabinet to have a 2" lip around top, open rear with 1" lower lip, cargo net style cover over rear opening and (1) adj shelf. Interior to be DA finish.	$1,357
1535-0249	Interior medical cabinet. Locate to rear of engine cover. Cabinet to be 32" high x 45" wide x 18" deep with sliding Lexan doors. Includes (1) adjustable shelf.	$2,946
1535-0250	Officer side cab wheel well medical cabinet approximately 26 x 22 (25 Quest) x 28. Includes external locking pan door painted job color with Trimark exterior latch, dual nader pins and interior hinged full height door with locking push-button latch.	$2,862
1535-0254	Rubber floor matting on interior of all medical cabinet floors.	$193
1535-0255	Compartment rear side of cab "under riser" type. Approx 9W x 30H opening. Includes double pan hinged door and pass through to bench if equipped. Long cab with medium door location only. Location: driver side.	$904
1535-0256	Officer side cab wheel well medical cabinet approximately 42x22(25 Quest)x28. Includes external locking pan door painted job color and interior cargo net. Cabinet includes (2) adjustable shelves.	$2,666
1535-0257	Driver side cab wheel well medical cabinet approximately 42x22(25 Quest)x28. Includes external locking pan door painted job color and interior cargo net. Cabinet includes (2) adjustable shelves.	$2,666
1535-0258	Medical cabinet mounted on rear wall of cab 63X40X20 with a front locking roll up door, sides open with cargo nets attached with clips in lieu of snaps and (2) adjustable shelves with 1" lips all the way around. Lower door opening raised 12" to provide area for rear heaters. Includes lower ventilation, front access and removable sub-floor for additional access.	$3,722
1535-0259	Officer side cab wheel well medical cabinet approximately 42 x 22 (25 Quest) x 28. Includes external locking pan door painted job color. Cabinet includes (1) adjustable roll-out tool board	$3,203
1535-0260	Driver side cab wheel well medical cabinet approximately 42 x 22 (25 Quest) x 28. Includes external locking pan door painted job color. Cabinet includes (1) adjustable roll-out tool board	$3,203
1535-0263	ALS - Side access. Includes compts on each side of cab with exterior locking roll-up doors, extended cab floor and three adj shelves in each cabinet.	$4,977
1535-0264	ALS - Side access. Includes compts on each side of cab, strikers high and low on exterior doors, access plts on int panel of exterior doors, satin finish ROM roll-up doors on interior, extended cab floor and three adj shelves. Includes pass-thru under bench seat (if equipped).	$5,181
1535-0265	Medical cabinet mounted on rear wall of cab 55X44X20 with angled corners and locking roll up door. Lower door opening raised to provide hand clearance.	$3,833
1535-0268	Officer side cab wheel well medical cabinet approximately 26 x 22 (25 Quest) x 28. Includes external locking pan door painted job color with Trimark exterior latch, dual nader pins and interior hinged full height door hinged outboard with locking push-button latch.	$2,862
1535-0269	Medical cabinet mounted on rear wall of cab 48 x 40 x 12 with locking roll up door. Lower door opening raised to provide hand clearance.	$3,833
1535-0270	Officer side cab wheel well medical cabinet approximately 42x22(25 Quest)x28 divided into (2) areas. Includes half height external locking pan door painted job color and upper interior cargo net. Cabinet includes exterior access only for lower and interior access only for upper.	$2,666
1535-0271	Driver side cab wheel well medical cabinet approximately 42x22(25 Quest)x28 divided into (2) areas. Includes half height external locking pan door painted job color and upper interior cargo net. Cabinet includes exterior access only for lower and interior access only for upper.	$2,666
1535-0272	Medical cabinet mounted on rear wall of cab 50X36X14 with non-locking roll up door. Cabinet mounted at minimum 18" above floor with 3x3 forward post mounts. Vista cabs only.	$3,756

1535-0273	Compartment dividers with rubber floor matting on interior of vista cabinet floor.	$242
1535-0275	Medical cabinet mounted on rear wall of cab 55 x 30 x 20 with a locking roll up door. Lower door opening raised approx. 12" to provide space for rear wall heaters and notch for transverse riser. Includes louvers and false floor.	$3,678
1535-0276	Medical cabinet mounted on rear wall of cab 40.5X36X16 with non-locking roll up door. Cabinet mounted at approx. 16" above floor with 3x3 forward post mounts. Includes (2) adjustable shelves.	$3,756
1535-0278	ALS - Side access. Includes compts on each side of cab, strikers high and low on ALS doors, access plts on int panel of ALS doors with Tri-Mark latches, extended cab floors, smooth plate rear kick plates and two adj shelves. Includes pass-thru under bench seat if equipped.	$3,673
1535-0279	Officer side cab wheel well medical cabinet approximately 26 x 22 (25 Quest) x 28. Includes external locking pan door painted job color with Trimark exterior latch and dual nader pins. No interior access.	$2,862
1535-0280	Interior medical cabinet. Locate to rear of engine cover. Cabinet to be 26" H x 34" W x 14" D. Cabinet to be open rear with a sweep out floor and a cargo net style cover over rear opening. Inlcudes (1) adjustable shelf.	$1,163
1535-0282	Rear cab wall medical cabinet with side access. Cabinet to be 50" high x 38" wide x 24" deep. Includes (2) black cargo nets and (3) adjustable shelves.	$2,556
1535-0283	ALS - Side access. Includes compartments on each side of cab, strikers high and low on exterior doors. Includes access plates on interior panel of exterior doors, satin finish ROM roll-up doors with 19" wide opening on interior (bottom raised to riser height), extended cab floor and three adjustable shelves. Cabinet Includes transverse riser with backboard storage. The interior riser jets/protrudes forward between side wall ALS cabinets to allow heaters (if so equipped) not interfere or impede upon transverse storage/ pass-thru of backboards and other equipment stored under the riser in the transverse storage area.	$5,567
1535-0284	Rear cab wall medical cabinet with side access doors (one each side). Cabinet to be 32" high x 38" wide x 24" deep. Includes (2) locking roll-up doors (satin finish) and (1) adjustable shelf, front bolt-on access panel and 1"X1" angle on perimeter of top. Lower door openings raised to provide hand clearance.	$2,969
1535-0287	Driver side cab wheel well medical cabinet approximately 42 x 24 (27 Quest) x 28. Includes external locking pan door painted job color and interior hinged full height door with locking push-button latch. Cabinet includes (2) adjustable shelves.	$2,452
1535-0288	Officer side cab wheel well medical cabinet approximately 42 x 24 (27 Quest) x 28. Includes external locking pan door painted job color and interior hinged full height door with locking push-button latch. Cabinet includes (2) adjustable shelves.	$2,452
1540-0001	Map box dual storage	$536
1540-0005	Map Box Rectangular Tall	$502
1540-0006	Map box suspended with drop-down doors.	$552
1540-0007	Map Box with Angle Storage. Angled side to face officer.	$476
1540-0008	Map box suspended with officer's map storage.	$667
1540-0014	All map boxes in the cab to be swirled with clear coat	$552
1540-0015	Map box suspended with drop-down door. Box offset to rear to allow engine access door to open further.	$552
1540-0016	Map box suspended with officer front drop down door with (4) slots and driver rear drop down door with (4) slots.	$656
1540-0017	Map box with angled top on rear of engine cover. Includes lift up door with gas shock.	$546
1540-0018	Map Suspended with Officer's Map Storage. (6) storage slots for 4" binders, (1) additional storage slot for county custom map book.	$667
1540-0020	Map box with 3 compartments on rear of engine cover. Forward compartment has angle lift-up door with gas shocks. Rear of box has top and rear compartments with hinged doors.	$1,117
1540-0021	Map box suspended 34" wide with (3) drop down doors.	$656
1540-0022	Map / medical box on rear of engine cover. Officer's side front has map box w/drop down door. Rear has two compts w/vert hinged doors. Left side includes one adj shelf.	$2,025
1540-0023	Map box suspended rear facing with drop down door. Box offset to rear to allow engine access door to open further.	$552
1540-0024	Map / medical box on rear of engine cover. Front has 2 map boxes w/3 horz slots ea and drop down doors. Rear has 2 compts w/vert hinged doors.	$2,256
1540-0025	Map box suspended with officer's map storage.	$667
1540-0026	Locking map box door. Map box door to include a locking push-button latch. Key type to be CH751.	$77
1540-0027	Map box suspended with officer front drop down door with (4) slots and driver rear drop down door with (2) slots.	$656
1540-0028	Map box suspended with full width lower storage and officer's map storage.	$667
1540-0031	Map Box Suspended with Drop Down Door 17H x 34W x 14D. Box offset to rear to allow engine access door to open further.	$668
1540-0032	Map box suspended with driver's map storage.	$667
1540-0034	Map box suspended 37" wide with (3) drop down doors.	$656
1540-0035	Rear engine cover rectangular map box 12H X 13.75W X 31L. Includes (3) slots driver, open center, (2) slots officer side and cargo net cover.	$921
1540-0037	Map box suspended with drop-down doors, 15" H x 37.5" W x 14" D with (4) slots each side.	$552
1540-0039	Map box / rear engine cover medical cabinet. Includes forward facing map box with 2 drop down doors and incorporated rear engine cover medical cabinet with roll-up door.	$4,251
1540-0040	Map box suspended with drop down doors. 34"W x 10"H x 12"D	$552
1540-0042	Map box suspended with driver and officer front drop down door and officer rear drop down door. Includes (4) slots on officer side and map storage on driver side.	$765

1540-0045	Map box rectangular with rear hinged door. 11"L (front to rear) x 20"W (side to side) x 6"D.	$476
1540-0047	Map box with 3 compartments on rear of engine cover. 2 compartments on top will be hinged back to back. Forward compartment has lift-up door with gas shocks. Rear of box has top and rear compartments with hinged doors. Lower compartment will be approx 7" high.	$1,117
1540-0048	Rear engine cover storage box with cargo net cover. 44"W x 24"H x 14"D with rear facing opening.	$1,025
1540-0049	Map box suspended with drop down doors. Driver door approx. 15.5"W, officer door approx. 19.5"W. 35"W x 11"H x 13.5"D. Includes (1) vertical partition 4" from officer side and (1) vertical partition 15.25" from driver side. Driver side and center sections to each have a horizontal shelf centered.	$552
1540-0050	Storage box with hinged top and push-button latch. Box to be mounted on rear of engine cover (hinge to forward edge), angled same as upper engine cover. Size: 15"H x 35"W x 7"D. Quest cabs only.	$425
1540-0051	Map box suspended with drop-down doors. 34"W x 9.50"H x 12"D.	$552
1540-0056	Rear engine cover rectangular map box angled to match upper and lower vertical engine cover. 11"H X 12"W (front to rear) X 42.5"L. Includes (6) storage slots approx. 14"L x 6"W with (3) retaining straps front to rear, (1) over each area.	$921
1540-0057	Map box suspended with driver and officer front and rear drop down doors. Includes (4) slots on each side.	$765
1540-0063	Map box suspended with (9) vertical slots.	$667
1540-0064	Map box suspended with (9) vertical slots and (1) full width horizontal slot.	$765
1540-0065	Map box suspended 37" wide with (3) drop down doors.	$759
1540-0066	Map box suspended with officer's map storage. Includes (4) equal slots on officer side and (1) driver slot equal to top officer slot.	$667
1540-0069	Map box suspended 34"W x 6"H x 12"D with driver and officer front and rear drop down doors. Includes (2) slots on each side. Locate just below AC.	$765
1540-0071	Map box suspended with (1) drop down door. 14"W x 9.5"H x 12"D	$512
1540-0073	Map box suspended with drop-down doors and (1) shelf each side. 34"W x 9.50"H x 12"D.	$552
1540-0075	Map box suspended with drop down doors. 34"W x 6"H x 13.5"D	$552
1540-0079	Map box suspended with drop-down doors. Approximately 34"W x 9.50"H x 13"D.	$757
1540-0080	Map box suspended with drop-down door installed on the rear of the box to provide accessibility from the rear. Box offset to rear to allow engine access door to open further.	$552
1540-0081	Rear engine cover rectangular map box approximately 10"H X 14"W X 14"D. The depth shall have (2) dividers equally spaced. Open top with cargo net cover.	$425
1540-0082	Map box suspended with drop-down doors. 34"W x 9.50"H x 12"D. (3) Slot officer's side, open driver's side.	$552
1540-0083	Map box rear facing. Lids only to be swirl plated with clear coat. Reference 581402.	$1,098
1540-0085	Map box suspended with drop-down doors and (1) shelf each side. Box offset to rear to allow engine access door to open further.	$552
1540-0086	Map box suspended with rear facing sliding Lexan doors, 15" H x 34" W x 12" D. Includes center partition and officer side shelf centered.	$668
1540-0087	Map box suspended with officer's map storage with quarter latches.	$667
1540-0089	Map box/radio cabinet suspended with drop-down doors 34x14x12. Includes louvers on officer side lower door, side wall and floor. Box offset to rear to allow engine access door to open further.	$804
1540-0090	Map box suspended with drop-down doors. Includes center vertical divider only.	$552
1540-0091	Map box suspended with drop-down doors and (1) shelf each side. 24"W x 9.50"H x 12"D.	$552
1540-0092	Map box binder storage approx. 13"H x 11"W x 4" front to back. Location: on interior facing wall of officer side medical cabinet. Includes lid with mechanical latch. To match cab interior color.	$261
1540-0093	Map box suspended with drop-down doors. Includes (1) adjustable shelf (no partition). Box offset to rear to allow engine access door to open further.	$552
1540-0094	Map box suspended with rear facing drop-down doors and (1) shelf each side. 34"W x 9.50"H x 12"D.	$552
1540-0095	Map box suspended with (1) drop-down door, (1) full width 2" high upper shelf, center lower vertical divider and (1) shelf each side of divider. 34"W x 9.50"H x 12"D.	$552
1540-0096	Map box suspended with drop-down doors, 15" H x 37.5" W x 14" D with (3) slots officer and (2) slots driver.	$552
1540-0098	Map box suspended with driver and officer front drop down door and driver rear drop down door. Includes (3) slots on officer side and map storage on driver side.	$765
1540-0100	Map box suspended with drop down doors. 34"W x 6"H x 13.5"D. (1) officer shelf only.	$552
1550-0001	Map pockets cab front doors diamond plate	$180
1550-0002	Map pockets cab front doors stainless steel.	$148
1550-0007	All cab exterior access doors to have CH751 keyed locks.	$178
1550-0008	Fixed rear cab wall windows (pr). Not available with side mount pump module applications.	$116
1550-0009	Fixed rear cab wall narrow windows (pr).	$113
1550-0010	Sliding rear cab wall windows (pr). Windows are drop style and not available with side mount pump module applications.	$259
1550-0013	Driver and Officer door windows. Includes electric roll-down actuation. Each door to have individual control at door position and the driver door is to have master control for all power window locations.	$1,468
1550-0014	Rear crew cab door windows. Includes electric roll-down actuation. Each door to have individual control. Not available with paddle style door latching.	$1,468
1550-0015	Stainless steel protective trim on rear edge of cab door openings. E-ONE custom chassis only.	$224
1550-0017	Cab door panels stainless steel.	$1,310
1550-0018	Scuff plates stainless steel (Set). Not available with paddle latches.	$104
1550-0019	Windows cab side sliding driver side.	$264
1550-0022	Cab roof vent with fan (pair). Each vent switched next to vent. Location: (1) each side centered above rear cab doors.	$803

1550-0023	Windows rear sliding vista. Requires raised roof option	$435
1550-0024	All cab doors shall have exterior paddle latches.	$612
1550-0029	Map pockets cab rear doors diamond plate	$154
1550-0030	Map pockets cab rear doors, stainless steel.	$187
1550-0032	Windows cab side sliding officer side.	$264
1550-0037	(4) Incandescent cab step area lighting. Locate each light in [#LOC]. Lights to be switched with door ajar.	$154
1550-0038	(4) LED cab step area lighting. Locate each light [#LOC]. Lights to be switched with door ajar.	$608
1550-0039	Door mounted red incandescent flashing lights (4). Locate lights [#LOC]. Lights to be switched with door ajar.	$154
1550-0040	Door mounted red LED flashing lights (4). Locate lights [#LOC]. Lights to be switched with door ajar.	$365
1550-0041	Door mounted amber incandescent flashing lights (4). Locate lights [#LOC]. Lights to be switched with door ajar.	$154
1550-0042	Door mounted amber LED flashing lights. Locate lights [#LOC]. Lights to be switched with door ajar.	$365
1550-0043	All cab door kick plates to be made from smooth plate aluminum with DA finish.	$299
1550-0045	All cab door kick plates to be made from stainless steel plate.	$627
1550-0046	Canadian flag reflective material in place of striping for interior cab doors.	$90
1550-0047	All (4) cab doors to have double strap. Straps to be sewn together.	$147
1550-0050	All cab exterior cab locks to be keyed for #CH751 locks. Orange County.	$262
1550-0053	Aluminum interior rear cab door handrails (PR) IPOS.	$327
1550-0054	All cab exterior access doors to have 1250 keyed locks.	$567
1550-0055	Door mounted Whelen 500 series red TIR6 LED flashing lights (4) w/clear lenses. Locate lights [#LOC]. Lights to be switched with door ajar.	$1,221
1550-0056	Cab door insert (ea) - Carbon fiber style. Quest cab only.	$228
1550-0057	Cab door insert (ea), stainless steel. Quest cab only.	$334
1550-0061	Rear crew cab door window. Includes electric roll-down actuation. Not available with paddle style door latching. For use with 3 door cab only.	$737
1550-0063	(3) LED cab step area lighting. Locate each light in [#LOC]. Lights to be switched with door ajar.	$457
1550-0066	Cab door kickplates fastened with screws.	$233
1550-0067	[#COL] chevron "V" stripe on lower cab door panel approx 18" high. Stainless steel door panels only. CIIX and TyphoonX only.	$289
1550-0068	Chrome grab handles on front cab doors (additional) (PR). Locate (1) each side below windows towards rear of doors.	$109
1550-0069	Reflective [#COL] 3M Diamond Grade striping positioned in the "A" formation located on the cab door panels.	$294
1550-0070	All (4) cab doors to have double door straps. Straps to be long enough to allow the door to open to a max of 90 degrees.	$290
1550-0071	ABS cab door panels and lower kick panels to be fastened with screws. No drive rivets.	$387
1550-0072	Cab door panels aluminum painted Zolatone gray.	$1,310
1550-0073	[#COL] chevron "A" printed stripe on lower cab door panel approx 18" high. Stainless steel/painted door panels only. CIIX and TyphoonX only.	$289
1550-0074	[#COL] chevron "A" stripe on entire lower cab door kick plate. Stainless steel or smooth plate kick plates only. CIIX and TyphoonX only.	$289
1550-0075	Door mounted red LED flashing lights (3). Locate lights [#LOC]. Lights to be switched with door ajar.	$275
1550-0078	Map pockets 14 gauge stainless steel. Includes vinyl trim around top of opening and nylon strap with snap to retain contents. Location: front cab doors.	$397
1550-0080	[#COL] chevron "A" printed stripe on lower cab door panel approx 12" high. Stainless steel door panels only. CIIX and TyphoonX only.	$289
1550-0081	Cab door locks - electric. Includes driver side exterior touchpad, (2) remote key fobs, barrel style key lock on exterior of each door and manual interior lock on each door.	$1,166
1550-0085	All cab exterior access doors to have J236 keyed locks.	$567
1550-0086	Door mounted red LED flashing lights (2). Locate lights [#LOC]. Lights to be switched with door ajar.	$184
1550-0087	[#COL] Diamond Grade chevron "A" stripe on lower cab door panel approx 12" high. Stainless steel/painted door panels only. TyphoonX, CIIX and QST2 only.	$480
1550-0088	[#COL] chevron 2" "A" stripe on lower cab door panel approx 12" high. Stainless steel door panels only. CIIX and TyphoonX only.	$289
1550-0096	Door mounted Whelen amber M6AC LED flashing lights (4) w/clear lenses. Lights to alternate flash top and bottom on each light. Locate lights [#LOC]. Lights to be switched with door ajar.	$1,309
1550-0098	Stainless steel protective trim on rear edge of cab door openings. E-One Quest chassis only.	$224
1550-0099	Scuff plates stainless steel (Set). Approx. 7"x7" to encompass door handle and lock. Not available with paddle latches.	$225
1550-0100	Polished stainless steel protective trim on rear edge of cab door openings. E-ONE custom chassis only.	$248
1550-0101	Polished stainless steel scuff plates for exterior cab door handles (set). Not available with paddle latches.	$108
1550-0102	Rear crew cab door windows with rear fixed panel. Includes electric roll-down actuation. Each door to have individual controls. For use with paddle style door latching.	$1,647
1550-0103	Rear crew cab door windows with rear fixed panel. Includes manual roll-down actuation. For use with paddle style door latching.	$178
1550-0106	[#COL] chevron "A" stripe on lower cab door panel approx 24" high. Stainless steel door panels only. CIIX and TyphoonX only.	$289
1550-0107	[#COL] chevron "A" stripe on lower cab door panel approx 6" high. Stainless steel door panels only. CIIX and TyphoonX only.	$206

1550-0108	Stainless steel protective trim on rear edge of rear cab door openings. E-ONE custom chassis only.	$113
1550-0109	[#COL] Diamond Grade chevron "A" stripe on lower cab door panel approx 18" high. Stainless steel/painted door panels only. TyphoonX, CIIX and QST2 only.	$480
1550-0114	Map pockets cab front doors aluminum plate painted Zolatone gray.	$168
1550-0115	Map pockets cab rear doors aluminum plate painted Zolatone gray.	$168
1550-0116	Cab door locks - electric; 2DR cab only. Includes driver side exterior touchpad, (2) remote key fobs, barrel style key lock on exterior of each door and manual interior lock on each door.	$901
1550-0117	Scuff plates stainless steel (PR) door lock. For use with paddle latches.	$54
1550-0120	Door panels cab alum painted Zolatone black.	$1,310
1550-0121	Cab door strap one (1) additional to standard straps shall be provided. Location: One (1) each cab door.	$141
1550-0125	Chrome grab handles on front of cab (additional) (PR). Locate (1) each side below winshields outboard of wiper pivot points.	$109
1550-0127	Door mounted Whelen M4RC LED flashing lights (4) w/clear lenses. Locate lights [#LOC]. Lights to be switched with door ajar.	$1,202
1550-0128	(4) Whelen LED cab step area lighting. Locate each light [#LOC]. Lights to be switched with door ajar.	$789
1550-0129	Enclosures for electric door window actuation switch(s) shall be stream lined, (1) switch behind another (not side by side) mounted in an enclosure to match the door's interior IPOS. Each door to be individually controlled. The driver shall have control for all electrically actuated windows.	$231
1550-0130	Stainless steel protective trim on rear edge of rear ALS cab door openings. E-ONE custom chassis only.	$113
1550-0131	Removable access panel on each cab door to the regulator and latch.	$495
1550-0132	Driver and Officer door windows. Includes electric roll-down actuation. Each window to be individually controlled at each door. Each window switch will be flush mounted as far forward on the door as possible with minimal or no switch mounting protrusion. The driver side will NOT have controls for all electrically actuated windows but rather a single switch for the driver door window only.	$1,674
1550-0134	Polished stainless steel trim on bottom edge of the over wheel cab compartment opening (ea).	$34
1550-0135	Stainless steel trim on the vertical edge of the over wheel cab compartment opening (ea).	$47
1550-0136	Polished stainless steel trim on the vertical edge of the over wheel cab compartment opening (ea).	$62
1550-0137	A removable access panel shall be incorporated into the interior cover panel(s) of each cab door to permit easy access to the latch mechanism.	$495
1550-0138	Door mounted Whelen M2 red super LED flashing lights (4). Locate lights on each cab door in the outboard position. Each individual light shall be activated by the corresponding cab door ajar circuit.	$1,074
1550-0139	Each cab door shall have stainless steel trim on the trailing edge of the door to include forward door wheel well (radius) area. E-ONE custom chassis only.	$386
1550-0140	Reflective [#COL] 3M Diamond Grade striping positioned in the "A" formation located in the lower cab door panels, extending approximately 14" from the door's bottom.	$342
1550-0141	Polished stainless steel protective trim to wrap cab door jambs on all (4) entry doors. Trim to extend 3" past closed door edge (as applicable). E-One custom chassis only.	$1,105
1550-0142	The cab door inserts shall have the fastening hardware upgraded to nutserts and stainless steel hardware IPOS.	$57
1550-0143	Reflective [#COL] 3M Diamond Grade striping positioned on the upper SS insert IPO lower door area.	$440
1550-0144	Reflective [#COL] individual striping positioned in the "A" formation located on the cab door panels.	$213
1550-0145	[#COL] chevron "A" individual stripes on lower cab door panel approx 18" high. Stainless steel/painted door panels only. CIIX and TyphoonX only.	$359
1550-0146	[#COL] chevron "A" individual stripe on lower cab door panel approx 12" high. Stainless steel/painted door panels only. CIIX and TyphoonX only.	$322
1550-0147	Location - Front door map pockets shall be located approximately 17" below window.	$100
1550-0148	Reflective [#COL] 3M Diamond Grade striping positioned in the "A" formation located in the lower cab door panels, extending approximately 12" from the door's bottom.	$324
1550-0149	Cab door kick plates made from diamond plate aluminum shall be overlaid on top of the existing door panel (Zolatone, stainless steel etc). The kick plates shall be 16" in height.	$198
1550-0150	Rear crew cab door windows with rear fixed panel. Includes electric roll-down actuation. Each door to be individually controlled. Each window switch will be flush mounted below rearward fixed window area with minimal or no switch mounting protrusion. For use with paddle style door latching.	$1,674
1550-0151	The map boxes attached to cab doors shall include press on black trim. The trim shall be applied along the edge of map box opening.	$76
1550-0154	Chrome edge guard on rear vertical edges of cab doors.	$75
1550-0155	Rear crew cab door window with rear fixed panel. Includes electric roll-down actuation. Door to be individually controlled. For use with paddle style door latching.	$825
1550-0160	Cab door locks - electric. Includes (2) remote key fobs, barrel style key lock on exterior of each door and manual interior lock on each door.	$711
1550-0161	Warning light Whelen 500 Super LED (4) red model 50R03ZCR lights with clear lenses. Flashing lights wired through each individual door. Location: One on each of the interior cab doors (outboard position).	$1,148
1550-0162	Door mounted Whelen 500 series amber TIR6 LED flashing lights (2) w/clear lenses. Locate lights on each cab door in the outboard position. Lights to be switched with door ajar.	$611
1550-0163	Map pockets cab rear doors aluminum plate painted Zolatone black.	$168
1550-0166	Stainless steel protective trim on rear edge of cab door openings. Includes front cab door lower angle areas. E-ONE custom chassis only.	$272

1550-0167	Reflective Blue 3M Scotchlite and Fluorescent Yellow Green 3M Diamond Grade striping positioned in the "A" formation located in the lower cab door panels.	$294
1550-0171	(4) TecNiq LED cab step area lighting. Locate each light [#LOC]. Lights to be switched with door ajar.	$208
1550-0173	Stainless steel trim on bottom edge of the over wheel cab compartment opening (ea). Vertical trim edge to be 3" tall.	$120
1550-0174	Reflective [#COL] 3M Diamond Grade striping positioned in the "A" formation located in the entire SS cab door panels below the windows.	$901
1550-0175	Door mounted Whelen model 0SA00MCR LED flashing lights. Locate lights [#LOC]. Lights to be switched with door ajar.	$279
1550-0176	Door mounted Whelen 3SR00FRR red super LED flashing lights (4). Locate lights [#LOC]. Each individual light shall be activated by the corresponding cab door ajar circuit.	$695
1550-0177	[#COL] Reflexite V98 striping positioned in the "A" formation located on the cab door panels.	$237
1550-0178	[#COL] Reflexite V98 chevron "A" stripe on lower cab door panel approx 12" high. Stainless steel/painted door panels only. TyphoonX, CIIX and QST2 only.	$327
1550-0179	[#COL] Reflexite V98 chevron "A" stripe on lower cab door panel approx 18" high. Stainless steel/painted door panels only. TyphoonX, CIIX and QST2 only.	$363
1550-0180	Cab door panels stainless steel. Includes upper and lower panels with seam below handrail.	$1,504
1550-0181	[#COL] chevron "A" printed stripe on lower cab door panel below map pockets to bottom of door. Stainless steel/Zolatone door panels only.	$289
1550-0182	Door mounted Federal Signal amber MPS600-AA LED flashing lights (4) w/clear lenses. Locate lights [#LOC] . Lights to be switched with door ajar.	$868
1550-0183	Recess in upper rear cab doors in lieu of windows (PR). (1) each side approx. 10L x 5W x 3D for latex glove box. Includes (2) velcro straps for each recess to be mounted at final inspection.	$558
1550-0184	Map pockets cab front doors aluminum plate painted Zolatone black.	$168
1615-0001	Vista full height rear doors, 12".	$3,498
1615-0002	Vista full height rear doors 16".	$3,661
1615-0003	Vista full height rear doors 20".	$3,826
1615-0015	Diamond plate overlay front of vista slope.	$461
1615-0016	Cab roof to have a 4.5" deep x 44" wide trough for lowered aerial.	$550
1615-0019	Vista full height rear doors 20". Includes 4" cap for a 24" total raised roof.	$5,194
1615-0020	Side vista roof windows behind rear doors. 80" cab with medium doors only.	$116
1615-0021	Split raised rear cab roof. 12" high for use with rear mount aerial.	$5,427
1615-0022	Cab roof to have 12" high split raised rear section with full length center waterway trough. For use with rear mount aerial.	$5,427
1615-0023	Cab roof to have 12" high split raised rear section with full length center waterway trough. Inboard vertical surfaces tapered outward for use with HP100 Platform.	$5,427
1615-0025	Cab roof to have a 4.5" deep x 44" wide trough with 1.5" deep side notches for lowered HP100 Platform.	$683
1615-0027	Cab roof to have 12" high split raised rear section and a 4.5" deep x 44" wide trough for rear mount lowered aerial. Includes embossed diamond plate overlay in trough.	$5,976
1620-0000	Overlay the painted grille with stainless steel	$329
1620-0002	Stainless steel grille for Typhoon X.	$868
1620-0003	Stainless steel grille for Typhoon	$868
1620-0006	CIIX stainless steel grille for Typhoon X.	$868
1640-0000	Step below cab door. Located [#LOC]. Steps under front cab doors shall not interfere with approach angle.	$223
1640-0016	Step below cab door; stirrup style without back wall. Located [#LOC]. Steps under Front Cab doors shall not interfere with Approach Angle.	$223
1640-0018	Step below cab door; smooth plate with gator grip painted black durabak. Located [#LOC]. Steps under front cab doors shall not interfere with approach angle.	$294
1640-0026	Removable bottom panel on cab steps.	$211
1640-0028	Step below cab door Zico VS-20-5 elect swing out/down. Step to extend when door is opened and retract when closed. Steps shall be flush with outter edge of cab when stowed. Location: Each cab door	$1,489
1640-0029	Each cab step well's kick plates and steps shall be aluminum smooth plate IPO diamond plate and all surfaces painted black durabak up to and below cab floor level. All step surfaces provided with a multi-directional, aggressive gripping surface (Gator Grip) incorporated into the aluminum smooth plate.	$587
1640-0030	Each cab step well's kick plates and steps shall be aluminum smooth plate IPO diamond plate and all surfaces painted Gray Zolatone up to and below cab floor level. All step surfaces provided with a multi-directional, aggressive gripping surface (Gator Grip) incorporated into the aluminum smooth plate.	$587
1640-0031	Each cab step well's kick plates and steps shall be aluminum smooth plate IPO diamond plate and all surfaces painted Black Scorpion (rough finish) up to and below cab floor level. All step surfaces provided with a multi-directional, aggressive gripping surface (Gator Grip) incorporated into the aluminum smooth plate.	$587
1640-0032	Step below cab door Zico VS-20-5 elect swing out/down. Step to extend when door is opened and retract when closed. Steps shall be flush with outter edge of cab when stowed. Location: Front cab doors.	$1,489
1640-0035	Each cab step well's kick plates and steps shall be aluminum diamond plate without a multi-directional, aggressive gripping surface (Gator Grip). Includes embossed diamond plate bolt-on panels at each lower step area.	$587
1670-0001	Ramco 6001FFR mirrors. Remote controlled with top CAS750 convex. Location: [#LOC].	$1,489

1670-0002	Ramco 6001MCR mirrors. Remote controlled with bottom convex. Location: [#LOC].	$1,182
1670-0003	Velvac 2010 mirrors. Door mounted west coast style with remote control and heat.	$635
1670-0006	1.5" Extension for Ramco Mirrors (OBSOLETE FROM MANUFACTURER)	$154
1670-0007	3" Extension for Ramco Mirrors	$154
1670-0008	4.5" Extension for Ramco Mirrors.	$154
1670-0010	Retrac West Coast mirrors mounted on cab doors.	$292
1670-0011	Cab mirrors for tiller cab. Includes one inside at front center overhead and one each side exterior mounted.	$283
1670-0013	Both cab mirrors to be heated.	$289
1670-0015	Velvac 2010 mirrors with marker lights. Door mounted west coast style with remote control and heat.	$669
1670-0017	Mirror Stainless Steel 8" Convex above officer side cab brow, Bell Type Mounting, 2 Piece Adjustable Telescoping Arm. Head #983, Arm #3983	$87
1670-0018	Velvac mirrors model 2025 with LED directional arrows. Door mounted (bottom mount) with remote control and heat.	$1,091
1670-0019	Ramco 6001CCR-750 mirrors. Remote controlled with bottom convex and top CAS750 convex. Location: [#LOC].	$1,585
1670-0020	Rosco mirrors w/marker lights and LED turn signals, remote, heated and convex. Located on front cab corners.	$1,096
1670-0021	Ramco 6001FFR mirrors. Remote controlled with CAS750R top remote convex. Location: [#LOC]	$1,721
1670-0023	Mirror Stainless Steel 8" Convex above driver side cab brow, Bell Type Mounting, 2 Piece Adjustable Telescoping Arm. Head #983, Arm #3983	$87
1670-0028	Rosco AccuStyle 818 door mounted mirrors (bottom mount). Chrome w/LED turn signals, remote, heated and convex.	$1,096
1670-0030	Kenworth model MX148S wide angle mirror. Location: [#LOC].	$175
1670-0031	2" extension for Ramco mirrors.	$154
1670-0032	Ramco 6001FFR mirrors. Remote controlled with top CAS750 convex and LED turn signals. Location: [#LOC].	$1,988
1670-0035	Ramco 6001FFR mirrors with INVUE camera. Remote controlled with top CAS750 convex. Location: [#LOC].	$2,626
1670-0036	Ramco 6001MCR mirrors with INVUE camera. Remote controlled with bottom convex. Location: [#LOC]	$2,626
1670-0038	Lang Mekra mirrors w/LED marker lights and turn signals. Door mounted west coast style with convex, remote control and heat.	$1,286
1670-0039	Moto mirrors model 340530. Door mounted with driver heat; officer remote control and heat.	$1,068
1670-0044	Ramco 6001FFR mirrors with INVUE camera and LED turn signals. Heated/remote controlled flat glass with heated/remoted controlled top CAS750 convex. Location: [#LOC].	$2,554
1670-0046	Ramco 6001MCR mirrors. Remote controlled with bottom convex and LED turn signals. Location: [#LOC].	$1,468
1670-0048	Retrac Aerodynamic remote heated mirrors (PR) mounted on cab doors.	$1,158
1670-0052	Ramco 6000-PCHR mirrors. The mirrors shall incorporate heated and remote for both flat and convex using (2) Ramco model ELE-310 switches. Location: [#LOC].	$1,723
1670-0053	Moto mirrors model 7-2386. Door mounted with remote control and heat.	$900
1670-0054	Velvac mirrors model 2030 chrome with LED directional arrows. Front corner mounted with remote control and heat.	$1,298
1670-0055	Velvac convex mirrors (PR). Model Top Hat bolt-on convex mirror. For use with model 2025 or 2030 mirrors only.	$197
1670-0056	Retrac west coast remote heated mirrors (PR) mounted on cab doors.	$1,232
1670-0059	Retrac Mirror stainless steel 10" 3-arm convex above officer side cab brow, 3 piece adjustable telescoping arm. Head #604953, Arm assy#604671	$272
1670-0061	Retrac west coast remote heated mirrors (PR) with convex lower mounted on cab doors. Includes green marker on officer and red marker on driver.	$867
1670-0063	Velvac mirrors model 2025 with LED directional arrows. Door mounted (bottom mount) with remote control and heat full bottom glass and heated top hat convex. No lower convex.	$1,153
1670-0064	Retrac west coast remote heated mirrors with lights (PR) mounted on cab doors.	$1,232
1670-0065	Retrac Mirror stainless steel 10" 3-arm convex above driver side cab brow, 3 piece adjustable telescoping arm. Head #604953, Arm assy#604671	$272
1670-0066	Ramco 6001FFR black mirrors. Remote controlled with black top CAS750 convex. Location: [#LOC].	$1,731
1670-0067	Ramco model CRM-1752-3HRT-853 mirrors. The mirrors shall incorporate heated and remote for both flat and convex using (3) Ramco model ELE-310 switches. Location: [#LOC].	$2,071
1670-0068	Lang Mekra mirrors w/LED marker lights and turn signals. Black door mounted west coast style with convex, remote control and heat.	$1,286
1675-0001	Stainless steel trim belt on front of cab. Location: [#LOC].	$458
1675-0005	Cab roof vent with-out fan (pair). Location: (1) each side centered above rear cab doors.	$358
1675-0006	Vent w/fan roof mounted, pair.	$803
1675-0014	SCBA bottle storage, two driver side of cab behind rear door with cast doors.	$708
1675-0015	Cab roof mounted diamond plate 3 sided light tower shield with 45 degree front slope.	$910
1675-0016	Cab roof mounted painted job color 3 sided light tower shield with 45 degree front slope.	$1,133
1675-0020	Auto eject stainless steel scuff plate.	$90
1675-0022	Pair of 18" handrails located just behind driver and officer front door one each side.	$356
1675-0023	Pair of 18" handrails located just behind driver and officer rear door (ALS doors if equipped) one each side.	$356
1675-0024	Pair of 36" handrails located just behind driver and officer rear door (ALS doors if equipped) one each side.	$387

1675-0025	SCBA bottle storage, two officer side of cab behind rear door with cast doors.	$708
1675-0030	Mud flaps, front, black with E-ONE logo.	$150
1675-0033	Chrome fire bell with eagle. Location: Officer's side of front bumper extension.	$1,330
1675-0034	Cab driprail drain holes. The driprail just before the vista roof begins to have a drain hole provided (one each side of cab).	$84
1675-0035	Belt size tag. Install next to fluid capacity tag. Tag to provide belt sizes for all belts provided.	$100
1675-0036	Cab wheel well liners. The cab wheel well liners to be aluminum IPO ABS plastic. Paint job color.	$575
1675-0038	Sign plate smooth 30" x 30" mounted on cab roof (vista if equipped). Color: [#COL].	$229
1675-0039	Pair of 48" handrails located just behind driver and officer rear door (ALS doors if equipped) one each side.	$445
1675-0041	Stainless steel trim belt low on sides of cab.	$1,361
1675-0042	Rear cab wall to be smooth 3/16" aluminum plate. Cab wall to be finish painted to match the cab paint scheme.	$335
1675-0045	Hansen white LED cab handrails upgrade (EA).	$187
1675-0048	Rear cab wall to be smooth 3/16" aluminum plate with a diamond plate overlay.	$419
1675-0053	Stainless steel scuff plates full height on rear cab corners (PR)	$231
1675-0054	Sign plate smooth 18"x28" mounted one each side cab roof (vista if equipped). Color: [#COL]	$454
1675-0055	Radio box 18W x 12H x 10D. Location: Centered up high of vista area recessed on the rear exterior cab wall with door hinged to the bottom.	$482
1675-0056	Stainless steel scuff plates on rear cab roof corners (PR)	$175
1675-0057	Mounting plate for battery charger receptacle and indicator - removable brushed stainless steel.	$273
1675-0058	Chrome fire bell with gold eagle. Location: Officer's side of front bumper extension.	$1,401
1675-0059	Rear cab wall to be smooth 3/16" aluminum plate with swirl plate overlay.	$688
1675-0060	Sign plate smooth 40" x 80" mounted on cab roof (vista if equipped). Color: [#COL]	$658
1675-0061	Cab roof mounted 4 sided light tower shield painted job color.	$1,473
1675-0062	Electric chrome fire bell with eagle. Location: Driver's side of front bumper extension. Includes switch on officer side overhead console.	$1,860
1675-0063	Mud flaps, front, black without logo.	$153
1675-0066	Skid plate under each lower step. Quest cab only.	$413
1675-0067	Cab roof mounted 3 sided light tower shield painted two-tone job color.	$1,133
1675-0071	Remove side grille from wheel well areas of the cab. TyphoonX cab only.	$226
1675-0072	(4) roof mounted (welded) sign plate mounting points. Mounts to space roof sign plate off cab roof and allow for easy removal.	$265
1675-0073	Hose deflector pin to protect Q2B on front bumper extension.	$199
1675-0074	Cab roof mounted 3 sided light tower shield with welded sides and painted job color with 45 degree front slope.	$1,339
1675-0075	Cab roof mounted painted job color 3 sided light tower shield with 90 degree front slope.	$1,133
1675-0076	Cab roof mounted diamond plate 3 sided light tower shield with 90 degree front slope.	$910
1675-0077	Storage box on rear cab roof 48W x 48L x 12H with 4-sided lid painted two-tone job color (if applicable)	$1,850
1675-0078	Hansen red LED cab handrails upgrade (EA).	$187
1675-0079	Diamond plate storage box for Little Giant model 17 on rear cab vista roof. Includes drop down door with push button latches and nylatron on floor.	$1,353
1675-0085	Under riser half depth roll-out trays. Includes cab floor extensions. Requires riser height exterior compartments.	$1,202
1675-0086	Raised cab wheel wells for low OAH applications.	$417
1675-0087	Pair of handrails (8" driver and 18" officer) located just behind driver and officer front door.	$459
1675-0088	Fluid capacity tag to include filter model numbers for engine oil, transmission, fuel, air, hydraulic and coolant. Tire size front and rear to be included on tag.	$100
1675-0089	Radio box 18W x 12H x 10D. Location: Up high center rear wall panel offset to driver side of vista area recessed on the rear exterior cab wall with door hinged to the bottom. Includes rubber bumpers on upper corners of door.	$482
1675-0090	Light tower riser ahead of vista. For use with large towers. Installed tower to not exceed over all height of vista roof.	$1,651
1675-0093	Grille on side of cab over wheel (PR). Grilles are non-venting and for cosmetic purposes only. Includes black-out surface behind grilles.	$234
1675-0094	Microphone/Speaker box. 11"H x 9"W x 6.5"D Location: Centered up high recessed on the rear vista exterior cab wall with vertically hinged door.	$482
1675-0095	Diamond plate storage box on rear cab roof 80W x 36D x 14H with lid.	$1,637
1675-0098	Rear cab door handrail package. Includes exterior mounted 18" extruded aluminum handrail driver side located just behind rear door and interior mouned rubber covered grab handle officer side at rear of opening.	$281
1675-0099	SCBA bottle storage (4) officer side of cab behind rear door with cast door. Upper storage compt will be spaced up above lower three due to rear wall support. N/A with exterior cab handrail (requires inside grab rail).	$1,414
1675-0110	Cab exterior hand rails to use Austin Hardware model GR-002-AL-BRT-144 knurled bright anodized aluminum tubes IPOS.	$119
1675-0116	Brushed stainless steel scuff plates for cab handrails (PR).	$196
1675-0118	Fluid capacity tag to include lug nut torque specs for front and rear wheels in addition to required information.	$100
1675-0123	Chrome fire bell laser etching. Requires design provided in digital format. One side only.	$594
1675-0124	Additional fluid capacity tag in French.	$100
1675-0125	Mounting plate for battery charge receptacle, indicator and air auto eject receptacle - removable brushed stainless steel.	$273

1675-0126	Diamond plate storage box on rear cab roof 70W x 40D x 8.5H with lid.	$1,637
1675-0130	Mounting plate for battery charge receptacle, indicator, air auto eject receptacle and block heater receptacle - removable brushed stainless steel.	$273
1675-0132	Customer supplied fire bell for dealer installation. Includes: bracing under extended front bumper extension, bulk head fiting and pull cable. Location: Officer's side of front bumper extension.	$410
1675-0133	Rear cab and vista glass (if so equipped) to be dark tint (smoked glass) IPOS. Includes all glass rearward of front cab doors.	$540
1675-0134	Cab wheel well liners. The cab wheel well liners to be aluminum with sanded finish IPO ABS plastic.	$469
1675-0135	Sign plate smooth with sanded finish 20" x 20" mounted on cab roof forward of vista.	$229
1675-0136	Radio box 18W x 14H x 12D. Location: Up high center rear wall panel of vista area recessed on the rear exterior cab wall with door hinged to the bottom. Includes rubber bumpers on upper corners of door.	$482
1675-0138	Cab roof mounted 3 sided roof mounted AC shield with 45 degree front slope painted two-tone job color.	$929
1675-0140	Cab roof mounted diamond plate 3 sided AC shield with 45 degree front slope.	$707
1675-0144	Pair of 24" handrails located just behind driver and officer front door one each side.	$373
1675-0145	Diamond plate cover to protect the air conditioner lines on the cab roof.	$213
1675-0146	Polished stainless steel scuff plates full height on rear cab corners (PR).	$419
1675-0147	Electric chrome fire bell with eagle. Location: Driver's side of front bumper extension. Includes switch on officer side dash.	$1,860
1675-0149	The battery charger receptacle mounting plate shall be fabricated using 3/16" aluminum smooth plate. It shall be painted to match cab two tone job colors and align with the paint break as mounted.	$134
1675-0151	Pair of 24" handrails located in the interior of driver and officer rear doors. The handrails shall be mounted on the rear wall. If equipped with an ALS cabinet the handrails shall be mounted on the ALS interior surface, outboard of the ALS access door within easy reach of rear door entry personnel.	$371
1675-0152	Sign plate smooth 40" x 40" mounted on cab roof (vista if equipped). Color: [#COL].	$304
1675-0153	SCBA bottle storage two driver and officer side of cab behind rear door with 3/16" plate doors painted job color.	$1,414
1675-0158	Backboard storage compartment for (1) board. Includes retaining strap for board. Loc: [#LOC].	$664
1675-0159	Mounting plate for battery charge receptacle, indicator and block heater receptacle - removable brushed stainless steel.	$273
1675-0160	Backboard storage compartment for (1) board. Includes (2) hinged doors (1) each side with (2) push button latches for each door. Loc: [#LOC].	$809
1675-0161	Escape hatch located on rear cab roof.	$1,195
1675-0162	Cab roof vent with-out fan (pair). Location: (1) each side offset above driver and officer.	$358
1675-0163	Storage box (additional) to house light tower controls/tether, mounted on the rear of the cab roof offset to the driver side (exterior). The storage box shall be constructed of tread plate, include a drop down door tied into the door ajar circuit and thumb latch(s).	$346
1675-0164	Cab roof mounted painted job color 3 sided light tower shield with 45 degree front slope to match the height of the light tower in the bedded position (+1" -0").	$1,235
1675-0166	Cab roof mounted painted job color 3 sided light tower shield with 45 degree front slope. Located rearward on flat roof (non vista). Placement to allow 45 degree shield to be placed in normal vista rise location to allow cab to appear to have vista roof.	$1,231
1675-0167	Sign plate mounted to the full width front bumper center hose tray lid. Smooth plate painted FLNA4145 Black sized according to space available.	$169
1675-0168	Sign plate smooth 30" x 45" mounted on cab roof (vista if equipped). Color: [#COL].	$304
1675-0169	Door single vertically hinged painted with Tri-Mark latch. Location(s): driver side canopy area of cab.	$885
1675-0170	Embossed diamond plate in place of ALL standard and optioned diamond plate on cab.	$1,389
1675-0171	Cab roof mounted 3 sided dual air condensor shield with 45 degree front slope. The shield shall be constructed using smooth aluminum plate. Finish: Painted to match upper cab.	$910
1675-0174	Hansen green LED cab handrails upgrade (EA).	$187
1675-0181	(1) 48" handrail located just behind rear door (ALS doors if equipped). 3 door custom cabs only.	$224
1675-0182	Mounting plate for battery charger receptacle and indicator - removable polished stainless steel.	$273
1675-0183	Side fixed windows behind rear doors. Windows to be same height as canopy windows. 80" cab with medium doors only.	$305
1675-0184	Chrome fire bell with eagle. Location: Officer's side front cab corner.	$1,429
1675-0185	Two (2) pair of 30" handrails. One (1) pair located just behind driver and officer rear door (ALS doors if equipped) one each side for access of cab rear door each side. The other pair located behind rear doors and rearward of handrails one each side for access to top mount walkway each side.	$734
1675-0186	Sign plate smooth with sanded finish 30" x 30" mounted on cab roof forward of vista. Color: [#COL].	$229
1675-0187	Pair of 24" handrails located just behind driver and officer rear door one each side.	$373
1675-0189	Door single vertically hinged painted with Tri-Mark latch. Location(s): officer side canopy area of cab.	$885
1675-0191	Sign plate smooth with painted finish 24" x 24" mounted on cab roof forward of vista. Color: [#COL].	$229
1675-0192	Rear cab wall to be smooth 3/16" aluminum plate painted black Durabak. Includes rear facing extrusions.	$688
1675-0193	Polished stainless steel trim belt low on sides of cab. No black trim on upper and lower areas.	$1,608
1675-0195	Body compartment interior painted black Durabak. Only for half height compartments. IIncludes Back, Top, Bottom (unless it is diamond plate) and Side Walls Compartment: [#LOC].	$339
1675-0197	Window cab side fixed officer's above medical cabinet.	$153
1675-0198	Polished stainless steel trim belt low on sides of cab.	$1,608
1675-0200	Hansen blue LED cab handrails upgrade (EA).	$187
1675-0204	The cab roof shall be diamond plate painted black durabak.	$870
1675-0205	Drip pan for a ROM roll-up door (EA). Location(s): driver and officer side ALS door.	$160

1675-0206	Pair of 18" handrails located on ALS doors just behind driver and officer rear door.	$356
1675-0208	Cab exterior hand rails to be Stainless steel knurled grip surface hand rails in place of standard anodized handrails.	$293
1675-0209	Stainless steel full height wrap on rear cab corners (PR). Includes under handrails behind rear cab doors (if equipped). Not available on long or extended cab with medium doors.	$426
1675-0210	Cab roof mounted 3 sided roof mounted AC shield with 45 degree front slope painted job color.	$929
1675-0213	Mounting plate for battery charger receptacle, indicator and air inlet (if applicable). Plate to be removable stainless steel painted job color.	$145
1675-0215	Brushed stainless steel 4" wide scuff plates for cab handrails (PR).	$196
1680-0000	Air intake emergency shut-down. Dash mounted guarded switch.	$1,554
1680-0001	Block heater 1000 watt.	$490
1680-0002	Block heater 1500 watt. Available on ISM, ISX and S60 only.	$500
1680-0005	Thermatic fan clutch.	$1,360
1680-0006	Drivelines 1710.	$1,012
1680-0007	Drivelines 1810. Required on 1550 lb/ft torque or greater engines.	$1,585
1680-0008	Tow eyes front painted below bumper/cab (PR).	$255
1680-0009	Tow eyes front stainless steel below bumper / cab (PR).	$641
1680-0010	Tow eyes front stainless steel mounted in up position. Requires 16" minimum bumper extension on custom chassis and 18" minimum bumper extension on commercial chassis.	$641
1680-0011	Tow eyes rear below body, painted.	$588
1680-0012	Tow eyes rear frame painted.	$523
1680-0013	Tow hooks front stainless steel in down position. Requires extended bumper on commercial chassis. If Non-Extended bumper on Comm. Chassis, tow hooks are to be ordered with chassis.	$766
1680-0014	Tow hooks front stainless steel mounted up. Requires 12" minimum bumper extension on custom and commercial chassis.	$766
1680-0015	Trailer hitch Class III mounted rear.	$935
1680-0016	Exhaust end chrome plated. Due to high heat from current emission exhaust systems, dis-coloring of exhaust end may occur after prolonged use.	$250
1680-0017	Hotshift PTO.	$1,886
1680-0021	Exhaust end for Plymovent. For exhaust extraction system.	$259
1680-0022	Auto lube system Vogel. Chassis points only.	$4,030
1680-0042	Tow hooks front painted in the down position.	$264
1680-0051	Aerial hydraulic activation system.	$1,218
1680-0053	Storage below rear bench seat. (1) hinged door on each side of the bench seat.	$585
1680-0056	Cold weather pkg for cab. Includes (2) 8" fans, fan clutch, additional insulation on the front wall and insulation on rear cab heater hose lines (if equipped).	$3,226
1680-0066	Vogel auto lube system for chassis points (up to 26) and jack system points (12).	$5,440
1680-0076	Under front bumper 9K winch receiver. Includes electrical connection for portable winch application. Custom chassis only.	$1,774
1680-0080	Tow eyes front painted in up and down position. Tow eyes to use same holes for both sets.	$508
1680-0081	Special cover kit for Memphis to include auto lube Vogel driver's side front frame and cannon plug cover	$405
1680-0082	The air intake emergency cable reset. Officer side of cab below the front bumper. Locate so cable is not visible or can be pulled without reaching under the bumper.	$206
1680-0087	Radiator brush guard below cab.	$571
1680-0091	Tow eyes front stainless in up position and painted in down position.	$892
1680-0092	Tow blocks under front bumper extension.	$308
1680-0093	Tow eyes front stainless steel with 3" holes mounted in up position. Requires 16 inminimum bumper extension on custom chassis and 18 in minimum bumper extension on commercial chassis.	$864
1680-0095	Side underbody 9K winch receivers. Includes (2) side facing- (1) each below rearward body compartments for portable winch with electrical connection for winch.	$1,499
1680-0096	Side underbody 9K winch receivers. Includes (2) side facing- (1) each below body compartment ahead of the rear wheels for portable winch with electrical connection for winch.	$1,499
1680-0099	Block heater 1500 watt wired through inlet receptacle. Available on ISM, ISX and S60 only.	$500
1680-0116	Oil pan heater. Fleetguard 22MM 150W/120V wired to shoreline.	$465
1680-0118	Cold Weather Pkg for Cab. Includes fan clutch and additional insulation on the front wall and insulation on rear cab heater hose lines (if equipped).	$2,874
1680-0124	Boom support modification - Tiller. Support to accommodate a 50" wide ladder tunnel.	$441
1680-0126	Block heater 1000 watt wired through inlet receptacle (or block heater auto eject inlet receptacle if so equipped).	$490
1680-0127	Block heater thermostat.	$254
1680-0131	Tow eyes rear frame stainless steel.	$1,232
1680-0134	Fuel tank steel skid plate. For use with 50/65 gal tanks. Includes front corner, bottom and rear corner of tank.	$1,130
1680-0137	Diesel Exhaust Fluid (DEF) 10 gallon tank. Location: [#LOC].	$1,499
1680-0145	Diesel Exhaust Fluid (DEF) 5 gallon tank. Location: [#LOC].	$1,423
1680-0154	Oil pan heater - Fleetguard 150W/120V wired to block heater receptacle. ISC/ISL only.	$405
1680-0181	Oil pan heater - Fleetguard 300W/120V wired to block heater receptacle. ISM only.	$514
1680-0186	Under the body to be equipped with a pair of receiver assemblies, each with a removable swivel hoist ring. One each side of apparatus. The receivers shall be square steel tubing, same size as a receiver for a Class III trailer hitch. Located to rear of front outriggers.	$3,282
1680-0187	On-Spot tire chain installation. Requires pre-wire option located in Cab Electrical. Requires engineering review and approval if less than 176" WB.	$2,686

1680-0188	Aerial hydraulics installed on bottom port of EVS4000 transmission (to allow for flat rear cab floor). Requires drive through hyd pump option (6150-0015) on aerials with hyd generator (10 kw max).	$1,564
1680-0189	Tow eyes front painted mounted in up position. Requires 16" minimum bumper extension on custom chassis and 18" minimum bumper extension on commercial chassis.	$255
1680-0193	Tow eyes rear below body stainless steel.	$1,943
1680-0194	Tow eyes front stainless steel through bumper / cab (PR).	$887
1680-0196	Tow eyes front painted through bumper / cab (PR).	$498
1680-0217	Driveline guard (EA).	$292
1680-0226	Shared aerial and hyd gen PTO system (for use with NPNT CR100/137/95-Platform with SmartPower or Harrison gen)(Requires eng approval with water pump).	$3,958
1680-0227	Tow eyes front painted with 3" holes below bumper/cab (PR).	$641
1680-0228	Under front bumper Class III hitch receiver. Custom chassis only.	$1,436
1680-0231	Insta-chain tire chain installation. Requires pre-wire option located in Cab Electrical.	$2,686
1680-0239	Tow eyes rear frame painted mounted low just above tailboard.	$523
1680-0242	Cold weather pkg for cab. Includes additional insulation on the front wall and insulation on rear cab heater hose lines (if equipped).	$3,196
1680-0245	Upgrade receiver and tow eye extension. The front bumper 9K winch receiver shall be extended forward, approximately 1" beyond front bumper IPOS (rather than at the under bumper location). Custom chassis only.	$711
1680-0247	Trailer hitch Class III mounted rear, optmized mounting to be in a raised mounting position.	$935
1680-0249	Driveline guards (as applicable).	$870
1680-0250	Diesel Exhaust Fluid (DEF) 5 gallon tank for 2013 EPA engines. Location: [#LOC].	$1,655
1680-0251	Diesel Exhaust Fluid (DEF) 10 gallon tank for 2013 EPA engines. Location: [#LOC].	$1,731
1680-0255	Seperate PTO for aerial hydraulic pump IPO shared system.	$1,874
1680-0258	Insta-chain tire chain installation. Includes 12 chain sytem. Requires pre-wire option located in Cab Electrical.	$2,804
1680-0271	Tow eyes front painted through bumper / cab (PR). Eyes to be 1" thick material.	$498
1680-0272	Plumb Vogel lube system to On-Spot tire chains.	$191
1680-0273	Additional engine insulation under cab. Includes forward and rearward cab areas. See Engineering for installation instructions.	$1,349
1680-0274	On-Spot tire chain installation. Includes 12 chains per wheel. Requires pre-wire option located in Cab Electrical. Requires engineering review and approval if less than 180" WB.	$2,880
1680-0277	Under the body there shall be equipped with a pair of receiver assemblies, each with a removable swivel hoist ring and chrome tow hooks (1) each side to act as tie down points. One each side of apparatus. The receivers shall be square steel tubing, same size as a receiver for a Class III trailer hitch. Located to rear of front outriggers.	$3,364
1680-0279	Steel tow bar located below rear compartment mounted to chassis frame for towing purposes only, painted black.	$1,771
1680-0282	Tow eyes rear below body, painted. 1" thick material with 3" diameter hole staight down from chassis frame.	$701
1680-0286	Tow eyes front painted in down position with additional officer only in the up position.	$381
1680-0287	Tow eyes front painted bright silver through bumper / cab (PR).	$498
1680-0288	Oil pan heater for ISL engine. Fleetguard 22MM 150W/120V wired to winterization shoreline receptacle.	$465
1680-0290	Bevel interior holes of front and rear tow eyes.	$51
1680-0291	Tow forks under front bumper extension.	$631
1680-0292	Auto lube system CPL. Chassis points only.	$4,192
1680-0293	Tow hooks front painted in the outboard position.	$264
1680-0295	Trailer hitch Class I receiver mounted rear.	$571
1680-0300	Steel lift bar located below rear compartment mounted to chassis frame for lifting purposes only (no towing), painted black.	$1,771
1680-0301	Cord connector. Daniel Woodhead 3 wire NEMA 5-20 straight blade male located for block heater routed to driver side battery box.	$149
1680-0302	Steel tow/lift bar located below rear compartment mounted to chassis frame, painted black.	$2,827
1680-0306	Air intake emergency shut-down. Pump panel mounted guarded switch with reset switch located below front bumper.	$1,745
1680-0307	4-ply upper and lower radiator hose ipos.	$68
1680-0309	Muncie digital tachometer. Locate display in cab visible to driver.	$656
1680-0311	Fan drive w/thermatic clutch permanently engaged.	$1,360
1685-0001	Cab interior black. Does not include seat color.	$2,786
1685-0002	Cab interior burgundy. Does not include engine cover or seat color.	$2,786
1685-0003	Fold down computer tray bolted to engine cover on officer's side.	$721
1685-0004	Storage below rear bench seat for four SCBA bottles.	$656
1685-0008	Control lanyard Y type for air horns.	$167
1685-0011	Stainless steel pair of window bars for rear cab doors.	$367
1685-0026	Door Seat Riser Ovrlap drv/off for the Typhoon only.	$190
1685-0027	Heater rear cab w/o cover (PR). 23,000 BTU ea.	$1,463
1685-0028	Heaters rear cab w/covers (PR).	$1,562
1685-0039	Window bars stainless steel pair for canopy windows.	$367
1685-0050	Modify rear bench seat riser to have storage access from each side for (4) SCBA bottles, (2) ea side. Hinge doors as to work best with rear heater locations.	$1,530
1685-0056	Heater rear cab w/o cover (PR) and front cab heater with heat to the feet for the driver and officer.	$1,463
1685-0057	Heaters cab rear with covers (PR), and front heater with heat to the feet for the driver and officer.	$1,562

1685-0058	Interior cab access panel. Driver side of cab for access to rear of shore line receptacle. Panel to be 8" x 8".	$297
1685-0059	Locking seat riser door. Driver and officer seat riser doors are to include a locking push-button latch. Key type to be 1250.	$147
1685-0061	Interior cab access panel. Officer side of cab for access to rear of shore line receptacle. Panel to be 8" x 8".	$297
1685-0062	Label package for Memphis units only, to include labeling of items behind all removable panels and check loose items in cab warning labor for off side dash and cab tilt access door.	$508
1685-0063	Medical glove box. Mount to rear area of engine cover. Includes slotted top for dispensing gloves without opening hinged lid. Box to be same color as interior of cab. Secure lid in closed position with small butterfly latch.	$246
1685-0064	Embossed diamond plate foot plates located at driver, officer and rear facing seat positions where feet would rest while seated.	$275
1685-0066	Officer seat riser storage compartment door to be on front of riser hinged towards engine cover.	$173
1685-0068	Rear engine cover diamond plate trim.	$212
1685-0069	Hinged interior cab gauge panel in front of driver. Includes (9) gauges- English dominant. Panel to be hinged for access to driver gauge cluster.	$2,074
1685-0078	Kick Plate in front of the officer to be diamond plate.	$140
1685-0084	3/16" Aluminum plate on top engine access door. To have swirl finish and be spaced up approx 1/2".	$246
1685-0085	Center cab dash electrical panel to be held in place with coin slot style fasteners.	$90
1685-0086	Stainless steel scuff plate under interior canopy window.	$326
1685-0089	Louvers for officers seat riser. Locate louvers in the front, side and door of riser.	$333
1685-0090	Rear cab headliner to be six pieces IPOS.	$253
1685-0093	Black rubber handrail mounted parallel to seats on rear of engine cover for driver and officer rear facing seats.	$177
1685-0094	Storage below rear bench seat. (1) horizontal hinged door on the front of the rear bench seat.	$422
1685-0095	Locking rear seat riser door (PR). Seat riser doors are to include a locking push-button latch. Key type to be 1250.	$147
1685-0104	Map pockets 14 gauge stainless steel (PR). Includes vinyl trim around top of opening and nylon strap with snap to retain contents. Locate pockets one each side on rear cab wall centered between center cabinet and side wall of cab with bottom approx 20" above floor.	$397
1685-0105	Sun visor strap (PR) with snap fasteners.	$137
1685-0106	Rear engine cover radio cabinet. Cabinet to have access from the top and from rear.	$656
1685-0107	Interior grab handle rubber covered (2). Locate one each side at interior of rear cab door opening (at rear of opening).	$204
1685-0108	Locking seat riser door. Driver and officer seat riser doors are to include a locking push-button latch. Key type to be CH-751.	$77
1685-0109	Locking rear seat riser door (PR). Seat riser doors are to include a locking push-button latch. Key type to be CH-751.	$77
1685-0110	Storage below rear bench seat for two SCBA bottles (one each side).	$656
1685-0111	Rear cab interior wall overlay with swirl and clear coat finish.	$662
1685-0112	Integrated Roll Sensor (IRS) for RollTek air bag system.	$2,126
1685-0113	Integrated roll sensor slave module for RollTek air bag system.	$990
1685-0114	Integrated Head Curtain (IHC) for RollTek air bag system.	$598
1685-0115	Integrated Belt Pretensioner (IBP) for RollTek air bag system.	$347
1685-0116	Interior grab handle rubber covered (2). Locate one each side at interior of front cab door opening (at rear of opening).	$204
1685-0117	Rear cab interior wall overlay with Zolatone finish.	$432
1685-0119	3/16" Aluminum plate on top engine cover forward of access door. To have swirl finish and be spaced up approx 1/2".	$246
1685-0120	Rear cab interior wall overlay with diamond plate finish.	$542
1685-0121	Flat bar (.5" x 2") installed on rear cab wall up high with full length shelf track.	$304
1685-0126	SCBA Storage tubes (4) horizontally mtd (2) each side in lower rear cab compartments above floor level.	$765
1685-0127	Locate rear cab heaters below front of rear wall seat riser(s). Includes louvers for ventilation.	$358
1685-0134	Embossed diamond plate foot plates located at each seating position where feet would rest while seated.	$275
1685-0135	Hot climate insulation package. Includes insulation for ceiling, front wall, rear wall, side walls, below seat risers, and in doors.	$2,246
1685-0136	Storage in rear wall free standing seat riser. (1) horizontal hinged door on the front of the free standing seat riser.	$327
1685-0138	3/16" Aluminum plate on top engine cover forward of access door. Finish to match cab interior and be spaced up approx 1/2".	$246
1685-0139	3/16" Aluminum plate on top engine access door. Finish to match cab interior and be spaced up approx 1/2".	$246
1685-0140	Storage at rear engine cover w/ cargo net top. (3) sided storage approx. 44.5"W x flush with upper engine cover high x sloped area of engine cover deep. Storage area to match cab interior.	$718
1685-0146	Extended electrical access panel in cab. Panel to extend up to allow for radio/equipment installation.	$565
1685-0147	Narrow rear cab wall support channel. Not available with rear wall seating.	$209
1685-0153	Storage below rear bench seat. (2) horizontally hinged doors on the front of the rear bench seat.	$843
1685-0154	Communications cabinets (1/8"). 20.5"W x 16"H x 20"D INT (PR). Includes (2) roll out trays and cargo netting over openings. Location: One each side over cab wheel wells. Includes a smooth plate cover with matching cab finish for customer installed wiring between towers.	$2,538

1685-0155	Cold climate insulation package. Includes insulation for ceiling, front wall, rear wall, side walls, below seat risers, and in doors.	$2,246
1685-0161	Severe duty dash package. Includes smooth plate alum center and officer side dash painted to match cab interior and lower dia plt kick panels.	$905
1685-0162	Severe duty engine cover. Includes floor type matting on sides, top forward and top rearward engine covers with sanded finish smooth aluminum trim.	$980
1685-0164	Severe duty engine cover. Includes floor type matting on sides, top forward and top rearward engine covers with smooth aluminum trim painted to match cab interior.	$1,151
1685-0165	Storage below rear bench seat. (1) horizontally hinged door on the front of the rear bench seat. Hinge hardware mounted with acorn nuts outside.	$422
1685-0172	Storage below rear bench seat. (1) hinged door on each front corner of the bench seat base.	$805
1685-0174	Louvers for rear bench seat riser. Locate louvers on each side of riser.	$333
1685-0180	On Scene Solutions Talon helmet holder (EA). Location: [#LOC].	$384
1685-0182	Severe duty dash package. Includes smooth plate alum center, officer side dash and lower kick panels; all painted to match cab interior.	$905
1685-0183	Heater cab with heat to the feet for the driver and officer	$764
1685-0184	Heater rear cab w/o cover. Includes 110V blower.	$1,215
1685-0185	Locking rear seat riser door. Seat riser door to include a locking push-button latch. Key type to be 1250.	$147
1685-0188	Stainless steel trim low on officer side of engine cover (to match driver side). CII / Typhoon only.	$126
1685-0189	Identification plate GSA units. Located on inside of driver's door. Exact information and wording to be determined at time of final inspection. See specification.	$268
1685-0191	Diamond plate cover for battery charger/air compressor. Includes louvers for ventilation.	$215
1685-0192	PAC TRAC panels vertical stacked on back wall of cab each side outboard of bench seat.	$1,401
1685-0193	Slide-out MDT mount officer cab dash. Requires severe duty dash w/MDT notch.	$1,026
1685-0194	Officer cab dash modification for Havis slideout MDT bracket. Not available with heat to feet or side roll protection.	$444
1685-0196	Severe duty Quest officer dash package. Includes smooth plate alum officer side dash with trim panel painted to match cab interior and lower dia plt kick panel.	$378
1685-0197	Rear upper cab interior wall 3/16" overlay with Zolatone finish. Approximately 20" high.	$345
1685-0199	Rear engine cover brushed stainless steel trim.	$446
1685-0201	Severe duty dash package. Includes smooth plate alum center and officer side dash painted to match cab interior and lower dia. plt. kick panels. Officer cab dash notched for MDT slide-out bracket(s).	$1,103
1685-0204	Side mount telescopic computer tray bolted to engine cover on officer's side.	$893
1685-0205	Storage at rear engine cover w/ drop down rear door. (3) sided storage approx. 44.5"W x flush with upper engine cover high x sloped area of engine cover deep with (2) equally spaced vertical dividers. Storage area to match cab interior.	$718
1685-0219	Interior grab handle rubber covered (2). Locate one each side at interior of rear cab door opening (at front of opening).	$204
1685-0221	Severe duty dash package. Includes smooth plate alum center and officer side dash painted to match cab interior and lower dia plt kick panels. Officer cab dash notched with recessed glove box. Includes angled notepad holder on top. Not available with Rolltek.	$1,332
1685-0222	Storage at lower rear engine cover w/ cargo net top. Approx. 30"W x 12"H x sloped area of engine cover deep. Storage area to match cab interior.	$718
1685-0223	Storage at rear engine cover w/ lift-up door. Storage approx. 44.5"W x flush with upper engine cover high x sloped area of engine cover deep. Storage area to match cab interior.	$718
1685-0225	Storage at rear engine cover w/ lift-up door. Storage approx. 37.5"W x flush with upper engine access cover high x 34" deep (front to rear). Includes forward 12" stationary cover. Storage area to match cab interior.	$995
1685-0235	Foot switch Linemaster model 632S to control air horns located [#LOC]. Includes 25 degree diamond plate bracket.	$113
1685-0238	Insulation - front cab wall. Includes insulation on rear cab heater hose lines (if equipped).	$101
1685-0239	Cab floor to be overlayed with 1/8" embossed aluminum diamond plate; front and rear. Single piece with no gaps around perimeter.	$897
1685-0240	Slide-out MDT mount officer cab dash with dock. Requires severe duty dash w/MDT notch. Not available with heat to the feet.	$1,407
1685-0243	Pac Trac panels vertically stacked on back wall of cab each side outboard of medical cabinet.	$1,401
1685-0247	Cab floor to be overlayed with 1/8" embossed diamond plate; front and rear. Single piece with no gaps around perimeter. Front plates to be sand blasted to remove shine.	$1,071
1685-0251	Diamond plate cover to protect the steering wheel shaft/knuckle.	$208
1685-0252	Storage cabinet center rear crew area. Box to be installed from behind engine cover to rear wall with open sides and (1) adjustable shelf. Sides will be provided with cargo net covers. Handrails provided on each side top of cabinet. Cabinet to match cab interior.	$2,767
1685-0254	Storage box locking, mounted on the rear lower engine cover. Engine cover lock box measures 18x24x9 with a lift top lid and a locking latch. Finish will match cab interior.	$818
1685-0258	SCBA rear wall peg tool board mount for three (3) Lifeguard Smart Dock 2 SCBA brackets. The "peg board" SCBA tool board shall be mounted between the two (2) rear outboard seats with adequate room between each pack to mount complete SCBA packs. Peg board sizing shall be approximately 40" wide X 35" high and shall be spaced off the rear wall approximately 1". The peg board shall be finished with Zolotone.	$2,429
1685-0261	Storage below rear bench seat. (1) cargo net (black) on each side of the bench seat to gain access to storage area.	$585

1685-0262	Storage below rear bench seat for two SCBA bottles (driver side). Officer side to be open storage w/ door.	$656
1685-0263	Severe duty dash package. Includes smooth plate alum center and officer side dash and lower kick panels; all painted to match cab interior. Officer cab dash notched for MDT slideout bracket(s).	$1,103
1685-0265	Smooth plate cover(s) for battery charger and air compressor. These cover's shall be painted to match cab interior and shall include louvers as required for ventilation.	$215
1685-0266	Bolt-in partition wall. Locate under bench seat centered between driver and officer side.	$213
1685-0267	Modify rear bench seat riser to have storage access from each side for up to (2) 20lb ABC extinguishers, (1) ea side.	$1,326
1685-0269	Storage box approximately 11" wide x 10" high x 26" deep made from 1/8" diamond plate aluminum, centered on to rear cab floor. The box shall cradle (1) 2.5 gallon water fire extinguisher. The door shall be hinged with push button latches to provide easy access to the extinguisher in its stowed position stored at a slight incline within the box.	$631
1685-0271	Embossed diamond plate foot plates painted with black Durabak located at each seating position where feet would rest while seated.	$387
1685-0272	Cup holder (PR) with shallow tray located at front center of engine cover. Polyurethane construction for use with severe duty engine cover only.	$114
1685-0273	KNOX-BOX MedVault 2 model 5520H3S2-4. Includes E-ONE installed wiring to battery hot. Location: rear wall of medical cabinet. Top of compartment right hand side forward facing. Requires dept to purchase software package from KNOX-BOX (if they do not already have it).	$2,545
1685-0274	Plate aluminum 1/8" outboard of medical cabinet rear wall between extrusions behind padding. Plate to run from ceiling down to rear cab support bracket.	$208
1685-0275	Cup holder (PR). Polyurethane construction for use in Typhoon and CII with severe duty engine cover only. Location: [#LOC].	$140
1685-0279	Chrome grab handle. Locate (1) on the engine cover centered between latches.	$109
1685-0281	Control lanyard type officer side only for air horns.	$167
1685-0282	Slideout MDT mount officer cab dash with dock (Havis DS-PAN-111, C-MD-105-Z, C-HDM-135). Requires severe duty dash w/ MDT notch. Not available with heat to the feet. To include 12 VDC electrical outlet wired to battery hot.	$1,784
1685-0283	Pac Trac panels vertically stacked on back wall of cab.	$1,401
1685-0284	Raceway across lower engine cover; full width of cover. Painted to match cab interior.	$206
1685-0285	Cup holder / tray for engine cover painted to match cab interior. Approx 14" wide x 10" long with tapered front corners and cup holders at each rear corner. For use in Typhoon and CII with severe duty engine cover.	$392
1685-0286	Control lanyard Y type for air horns. Aircraft style cable (1/8" wire cable covered with clear plastic/nylon tubing) shall be used IPOS.	$217
1685-0287	Rear engine cover trim 1/8" smooth aluminum painted to match cab interior and spaced up 1/2". Includes both horizontal surfaces and angle vertical surface between horizontal surfaces.	$446
1685-0289	Foot switch Linemaster model 632S to control Q2B siren located [#LOC]. Includes 25 degree diamond plate bracket.	$113
1685-0290	Pac Trac panels vertically stacked on back wall of cab between forward facing outboard seats.	$1,401
1685-0291	4Front air bag system with steering wheel bag, driver knee bag and officer knee bag. Requires RollTek option.	$4,236
1685-0295	The rear wall support channel shall not include pre-punched holes for optional seating not contained within this order.	$51
1685-0296	Severe duty dash package. The officer side dash shall be lowered 2.5" below its standard height. Includes smooth plate alum center and officer side dash painted to match cab interior and lower dia. plt. kick panels. Officer cab dash notched for MDT slide-out bracket(s). The notch position shall not be modified (only the officer side dash top). Not available with heat to the feet.	$1,252
1685-0297	Storage at rear engine cover w/ lift-up door. Storage approx. 36"W x flush with upper engine cover high x sloped area of engine cover deep. Storage area to match cab interior.	$683
1685-0298	The cab floor shall have the pre-punched holes for the accelerator and brake pedals modified. All brake and accelerator pedal hole cutout(s) necessary shall not be visible after the pedals have been mounted in place.	$100
1685-0300	Hook(s), stainless steel shall be provided in the cab. Location: within easy reach of the driver's seated position.	$69
1685-0307	Cup holder / tray enlarged for engine cover painted to match cab interior. Approx 19" wide x 12" long with tapered front corners and cup holders at each rear corner. For use in Typhoon and CII with severe duty engine cover.	$422
1685-0308	Riser rear bench seat with provisions for rear wall heaters (if equipped). For use with flip-up seats.	$1,377
1685-0311	Adjustable throttle and brake pedals. Includes sw accessible by driver.	$1,029
1685-0312	Locking thumb latch on DEF tank door ipos.	$65
1685-0313	Smooth plate cover for battery charger. Includes louvers for ventilation. Cover to match cab interior.	$215
1685-0314	Officer wheel well cabinet (1/8"). 20.5"W x 14"H x 20"D INT. Includes (1) roll out tray with 8" sides. Rear opening will have cargo netting. Includes 1" lip around perimeter of top.	$1,261
1685-0315	Storage below rear bench seat. (1) hinged door on each side of the bench seat. The hinge shall be mounted on the forward edge of the opening each side.	$585
1685-0320	Storage at rear engine cover w/ cargo net top. (4) sided storage approx. 44.5"W x 3" upper (13" lower) deep x 21" front to rear. ISX engines only. Storage area to match cab interior.	$718
1685-0321	Divider below rear bench seat (PR). Requires side access doors. Location: (1) each side of front access door.	$337
1685-0322	Storage at lower rear engine cover w/ cargo net top. Approx. 30"W x 8"H x 12" deep with a center divider (front to rear). Storage area to match cab interior.	$718

1685-0324	Storage at lower rear engine cover w/ lift up door and dividers for 3" binders. Approx. 24"W x 14"H x 12"D. Storage area to match cab interior.	$718
1685-0329	Map pockets aluminum plate painted to match cab interior (PR). Includes vinyl trim around top of opening and nylon strap with snap to retain contents. Locate pockets one each side on front wall of rear access map box between driver and officer.	$397
1685-0330	Pac Trac panels vertical stacked on back wall of cab officer side outboard of seat(s).	$701
1685-0333	3/16" aluminum plate on top engine cover forward of access door approx. 32"W x 12.5"L. Finish to black Durabak and be spaced up approx 1-1/4". Not available with cup holders.	$265
1685-0334	VIN, Tire size, Paint Color and Vehicle Emissions tags to be metal engraved fastened in place with stainless steel hardware.	$642
1685-0335	Rear engine cover swirl smooth plate (not clear coat) trim spaced 2" off cover. Includes lower horizontal surface and angle vertical surface between horizontal surfaces.	$531
1685-0336	Storage below rear bench seat for two SCBA bottles (officer side). Driver side to be open storage w/ door.	$656
1685-0337	Riser rear seat(s) with transverse. For use with side access ALS and flip-up ABTS seats. Transverse to be used for backboard storage.	$1,377
1685-0338	Severe duty dash package with low profile center and officer side dash. Includes smooth plate alum center and officer side dash painted to match cab interior and lower dia plt kick panels.	$1,050
1685-0339	Lower exterior cab steps to be equipped with Bustin Industries Type M stainless steel overlay in lieu of Gator Grip. Includes (6) 3/4" drain holes on the lower steps.	$963
1685-0341	Diamond plate power strip cover (ea).	$145
1685-0343	Storage at lower rear engine cover w/ cargo net top. Approx. 44"W x 8"H x 12" deep with (2) dividers (front to rear). Storage area to match cab interior.	$718
1685-0346	Storage cabinet mounted on the officer wheel well offset forward toward officer seat 15.5X24X21. Includes rear facing cargo netting.	$976
1685-0347	Bolt-in partition wall. Locate rear of driver seat approx. 21"W x 24"H.	$213
1685-0349	PAC TRAC panels vertically stacked each side backwall of outboard medical cabinets.	$985
1685-0350	Diamond plate storage at rear engine cover w/ drop down rear door. Approx. 41"W x flush with upper engine cover high x sloped area of engine cover deep.	$718
1685-0353	Divider below rear bench seat; adjustable. Requires side access doors.	$337
1685-0355	Storage below rear bench seat. (1) cargo net (black) on each side of the bench seat to gain access to storage area. Includes snaps on top and bungee cord on bottom	$585
1685-0356	Writing surface cab dash finished same as cab interior. Location: Mount at final inspection.	$199
1685-0357	Rear cab interior wall overlay plates with Zolatone finish each side outboard of rear seating. Approx. 15"W x 32"H.	$276
1685-0358	Storage at lower rear engine cover w/ lift-up door (ISL only). Storage approx. 44.5"W x 15"H x 12"D. Storage area to match cab interior.	$718
1685-0362	Cab floor overlays. Front and rear cab floors to be overlayed with diamond plate painted with black Durabak. Single piece with no gaps around perimeter.	$1,194
1685-0363	Locking seat riser door. Officer seat riser door is to include a Simplex model 9672C-20-260-41 combination lock with satin chrome finish and black trim ring. Not available with air or electric seats.	$349
1685-0364	Recessed access panel in MDT notch on officer side cab dash. Approx. 8" x 8".	$199
1685-0365	Air ride seat pull down (S4) for RollTek air bag system.	$925
1685-0366	Side Rollover Airbag (SRA) for RollTek air bag system.	$598
1685-0367	Diamond plate tray rear engine cover. Approximately 43"W x 7.5"D x 2.5"H. Included strap over center of tray.	$385
1685-0368	Pair of 36" handrails located inside driver and officer rear door on rear interior wall. Not available with outboard rear wall seats.	$387
1685-0369	Severe duty dash package with low profile officer side dash. Includes smooth plate alum center and officer side dash and lower kick panels; all painted to match cab interior.	$1,103
1685-0370	Bolt-in partition wall. Locate under bench seat side to side at pass-thru area of riser height compartments.	$213
1685-0371	Overhead console flange re-inforcement. Includes driver and officer side consoles.	$100
1685-0373	Transverse riser height area for use with exterior riser height compartments and fold down/flip up seats (if equipped).	$373
1685-0374	Stack-On model PS-514-12 gun safe. Location: centered on top of rear wall medical cabinet.	$300
1685-0376	Rear engine cover shelves with cargo netting. Storage area to match cab interior. See sketch in file.	$747
1685-0377	Fixed back wall mounted swirled overlay. Overlay to be spaced off wall approx. half inch. Location(s): center rear wall of cab full height above seat support channel x engine cover width.	$254
1685-0379	Officer overhead panel painted FLNA4006 white.	$181
1685-0380	Storage above rear wall medical cabinet w/ cargo net sides. Approx. 32"W x 22"H x 24" deep. Storage area to match cab interior.	$718
1685-0381	1/8" aluminum plate on top engine cover forward of access door approx. 32"W x 12.5"L. with 1" lips around perimeter. Finish to match cab interior and be spaced up approx 1". Not available with cup holders.	$419
1685-0382	PAC TRAC panels vertically stacked each side backwall of outboard of fold down seats.	$985
1685-0383	Upper vista wedge on driver side wheel well medical cabinet. Includes rear facing cutout 9.5H x 12.5W centered approx 1.25" up from bottom. Wedge to match cab interior.	$491
1700-0001	Alternators Leece Neville dual 270 amp. 480 amp NFPA/540 amp SAE rating. Available only on ISX12 and Detroit EGR Series 60 engines.	$3,660
1700-0003	Alternator Leece Neville 270 amp SAE, 240 amp NFPA rating.	$1,923
1700-0005	Alternator Leece Neville 320 amp. 320 amp SAE/275 amp NFPA.	$3,111
1700-0008	Alternator Leece Neville dual 320 amp. 560 amp NFPA/540 amp SAE rating. Available only on ISX12 and Detroit EGR Series 60 engines.	$5,033

1700-0010	Noise filter for Leece Neville alternator.	$204
1700-0012	Alternator Niehoff 430 amp (430 Amp SAE/380 NFPA rating). Available on Cummins ISX12 only.	$4,295
1700-0017	Noise filter for Neihoff alternator.	$206
1700-0018	Alternator Delco Remy 300 amp. 300 amp SAE/264 amp NFPA.	$3,049
1700-0019	Alternator Niehoff 360 amp (360 amp SAE/320 NFPA rating). Available only on ISX12 and ISX15.	$3,114
1700-0021	Alternator Niehoff 360 amp (360 amp SAE/320 NFPA rating). Available only on ISL.	$3,114
1750-0000	Ammeter gauge in cab 0-300 amps.	$305
1750-0001	Dome lights clear large one for each cab door.	$136
1750-0002	Dome lights red large one driver side one officer side	$136
1750-0004	Dome lights red large one driver side one officer side rear of cab	$136
1750-0006	Map light flexible arm. Located [#LOC].	$190
1750-0008	Radio AM/FM cassette with weather band located [#LOC]	$500
1750-0009	Radio AM/FM CD with weather band located [#LOC].	$766
1750-0010	Radio speakers additional pair. Locate each side rear cab ceiling.	$259
1750-0011	Speedometer officer's side overhead.	$295
1750-0012	Swivel reading lamps (PR) overhead between driver and officer. Lights to be individually switched.	$103
1750-0013	Turn signal Whelen 600 LED amber arrow pair located [#LOC].	$609
1750-0015	Windshield fans 8" pair. Location: [#LOC].	$355
1750-0016	Pump hourmeter in cab.	$128
1750-0019	Battery charger Super Smart 110 volt, 20 amp.	$397
1750-0021	Battery charger Kussmaul model 1200, 40 amp.	$667
1750-0022	Battery charger Kussmaul 40 amp model 1200 with air compressor.	$2,249
1750-0024	Auto-Eject receptacle inlet 20 amp located [#LOC] with a [#COL] cover.	$542
1750-0025	Super Auto-Eject receptacle inlet 30 amp 120 volt located [#LOC] and with a [#COL] cover.	$792
1750-0026	Clamshell controller mounted on officer's side of engine cover for the air horns.	$118
1750-0027	Control push-button switch officer dash for Q2B siren.	$90
1750-0029	Switch horn button two position DOT/air horn.	$94
1750-0030	Switch horn button two position DOT/electronic siren.	$94
1750-0031	Switch horn button two position DOT/Q2B.	$94
1750-0032	Switch horn button three position DOT/air horn/electronic siren.	$191
1750-0033	Switch horn button three position DOT/air horn/Q2B.	$191
1750-0034	Switch, additional 12 volt/15 amp. Location and function: [#LOC].	$191
1750-0035	Cornering light relay circuits for lights on sides of cab and / or bumper. Includes (2) relays. Requires scene light option. Interlocked with park brake.	$390
1750-0039	Mrkr Pkg Chas LEDTrklt-Pmp/Res	$523
1750-0040	Battery charger Super Smart 220 volt 50 Hz, 20 amp.	$397
1750-0042	Horn button selector switch, 3-position DOT/ES/Q2B.	$191
1750-0043	12V power distribution module. Includes (6) battery hot and (6) switched hot circuits. 100 amps max (IATS).	$295
1750-0047	The chassis shall be pre-wired for installation of tire chains.	$403
1750-0048	Round clear incandescent light mounted in the [#LOC] door.	$33
1750-0049	Round red incandescent light mounted in the [#LOC] door.	$33
1750-0050	Round amber incandescent light mounted in the [#LOC] door.	$33
1750-0052	Round clear LED light mounted in the [#LOC] door.	$154
1750-0053	Round red LED light mounted in the [#LOC] door.	$59
1750-0054	Round amber LED light mounted in the [#LOC] door.	$59
1750-0059	Receptacle inlet 20 amp with a [#COL] cover. Location: [#LOC].	$274
1750-0060	Auto transfer switch 120 volt. Includes 8 place breaker box. Allows interior receptacles to be powered by either shore power or generator.	$720
1750-0061	Control push-button switch officer dash for air horns.	$90
1750-0062	Control push-button switch officer dash for siren.	$90
1750-0063	Clamshell controller mounted on officer's side of engine cover for Q2B.	$118
1750-0064	Clamshell controller mounted on on officer's side of engine cover for electronic siren.	$118
1750-0065	Turn signal Whelen 600 halogen amber pair located [#LOC].	$269
1750-0066	Halogen front turn signal amber (PR). Locate: [#LOC].	$259
1750-0067	Additional 4" red LED dome lights (PR) for driver and officer.	$269
1750-0068	Additional 4" red incandescent dome lights (PR) for rear of cab.	$251
1750-0069	Additional 4" red incandescent dome lights (PR) for driver and officer.	$205
1750-0070	Additional 4" red LED dome lights (PR) for rear of cab.	$269
1750-0071	Mount customer supplied antenna on cab roof. Location: [#LOC].	$166
1750-0072	12 VDC (or 24VDC) electrical outlet in the cab wired battery hot. Location: [#LOC].	$58
1750-0073	Antenna base Tessco P/N 90942 (NMO Motorola Style - also called MATM style) on cab roof. Location: [#LOC].	$89
1750-0074	Interlock to position front intake for cab tilting.	$262
1750-0075	English dominant main cab gauge cluster.	$1,925
1750-0076	Metric dominant main cab gauge cluster.	$2,039
1750-0077	Turn signal Code 3 model 65 LED amber with arrow insert (PR). Location: [#LOC].	$682
1750-0078	Light Whelen model PSR00FRR LED (4) red. Horizontal mounted flashing strip light on each of the inside lower cab door panels. Wire through door switch.	$748
1750-0079	Fuel gauge for officer.	$237
1750-0080	Conduit flexible 1.5" for radio installation center of dash to compartment under officer's seat.	$286
1750-0081	Conduit flexible 1.5" for radio installation compartment under officer's seat to pump panel.	$251
1750-0082	12V power distribution module. Includes (6) battery hot and (6) switched hot circuits. 100 amps max (IATS). Location: [#LOC].	$295

1750-0083	Turn signal Federal Signal QuadraFlare QL64Z-ARROW LED amber pair located [#LOC].	$259
1750-0084	Receptacle inlet 220 volt European "Schuko" style. Includes matching cord connector. Location: [#LOC]	$391
1750-0088	Whelen 500 LED red door ajar light. Model 50R00FRR light with 5FLANGEC flange.	$178
1750-0091	Battery Saver Kussmaul model 091-195-12 wired to battery charger receptacle.	$658
1750-0095	Second DOT traffic horn	$126
1750-0096	Bracket for Motorola Spectra Radio in the center overhead console offset to officer side. Dim: 7"W x 2"H, must be size of the opening after break.	$77
1750-0115	Master warning light switch to have a red cover (or bezel).	$36
1750-0117	Auto eject receptacle inlet 15 amp 240 volt with a [#COL] cover. Location: [#LOC].	$496
1750-0118	Flexible 2" conduit with connectors. Location: Officer cab dash to bottom of medical cabinet.	$348
1750-0121	Ammeter gauge in cab 0-400amp Cruz Pro digital.	$456
1750-0123	Auto eject receptacle inlet 15amp location or function [#LOC] and the color shall be [#COL].	$493
1750-0124	Whelen 4" round LED red door ajar light. Model 20R00FCR light with 2FLANGEC bezel.	$178
1750-0125	Block heater receptacle 15 amp with a [#COL] cover. Location [#LOC].	$274
1750-0126	Conduit flexible 1.5" for radio installation center of dash to area behind officer's seat.	$286
1750-0131	Pyrometer gauge in cab.	$541
1750-0132	Auto transfer switch for additional battery charge receptacle.	$435
1750-0133	Conduit flexible 1.5" for radio installation center of dash to rear bench seat.	$286
1750-0134	Conduit flexible 1.5" for radio installation rear bench seat to pump panel.	$437
1750-0136	Battery charger Super Smart 220 volt 60 Hz, 20 amp.	$397
1750-0137	Kwik Eject auto eject receptacle inlet 20amp located [#LOC] with a yellow cover. (Obsolete from vendor)	$588
1750-0144	Q2B brake switch to have a red cover (or bezel).	$36
1750-0145	Relocate the battery charger and (if applicable) air compressor to below the rear wall bench seat or rear center wall medical cabinet (if equipped).	$525
1750-0147	Hand held flashlight, orange Streamlight Survivor Division 2 right angle flashlight with 12 VDC fast charger. [#LOC].	$254
1750-0148	Turn signal Whelen 700 LED Chevron amber (PR). Locate [#LOC].	$638
1750-0149	Control push-button switch on officer's dash for Q2B siren brake.	$90
1750-0150	Block heater receptacle 20 amp Auto-Eject with a [#COL] cover. Location [#LOC].	$542
1750-0151	Receptacle inlet 15amp with a [#COL] cover. Location: [#LOC]	$274
1750-0156	Special EQ2B power amplifier location. Amp to be located [#LOC].	$263
1750-0157	Special battery charger location. Charger to be located [#LOC].	$263
1750-0158	Dome Lts Red/White LED. Package includes two lights mounted in the front and two mounted in the rear of the cab. White light wired through door and light assembly switch. Red light through light assembly switch.	$766
1750-0159	3 Position Q2B momentary switch (activate/off/brake). Loc: [#LOC].	$191
1750-0160	Dome Lts Red/White Incandescent. Package includes two lights mounted in the front and two mounted in the rear of the cab. Front cab lights: White light wired through door and light assembly mounted switch. Red light through light assembly mounted switch. Rear cab lights: White light wired through door and switch on side cab interior wall. Red light through switch on side cab interior wall. Rear dome switches to be located between side window and door opening and control light on respective side of cab.	$908
1750-0161	Air compressor, Kussmaul model 091-9B-1, 120V.	$928
1750-0162	Battery charger Kussmaul model 091-35/10, 35 amp battery charger / 10 amp battery saver.	$778
1750-0163	Speedometer officer's side switch panel.	$295
1750-0164	Fuel gauge for officer. Location: officer switch panel.	$237
1750-0165	Conduit flexible 1.5" for radio installation center of dash to compartment under driver's seat.	$286
1750-0166	ATC override switch.	$191
1750-0167	Block heater to be wired to battery charger receptacle with a lighted on/off switch behind driver seat.	$190
1750-0168	Dome Lts Red/White 4" incandescent (5). Lights to be located two front and three rear. White light wired through door and light assembly mounted rocker switch. Red light through light assembly mounted rocker switch.	$691
1750-0169	Radio speakers (3). Locate officer ceiling and each side rear cab ceiling. Wiring to terminate in officer side overhead console for customer supplied radio(s).	$445
1750-0171	Clamshell controller mounted on on driver's side of engine cover for Q2B.	$118
1750-0172	Special battery charger and air compressor location. Charger and air compressor to be located [#LOC].	$263
1750-0173	Rocker switch cover (or bezel) to be red. Location: [#LOC].	$36
1750-0174	Battery Charger Professional Mariner. Located outside driver side door area. The charger to be mounted under rear bench seat riser (centered) .	$1,322
1750-0176	Light Whelen model 70RA6FCR Super LED (4) split red/amber with chrome flanges. Horizontally mounted flashing lights on each of the interior cab door panels outboard mounted. Wire through door switch.	$1,527
1750-0177	Receptacle inlet 30amp twist lock with a [#COL] cover. Location: [#LOC].	$525
1750-0178	Windshield fan 8". Location: rear facing mounted on driver side 3x3 post.	$179
1750-0179	Dome light red/white Incandescent for tiller cab. White light wire through door and light assembly switch. Red light through light assembly switch.	$135
1750-0180	Dome light red/white LED for tiller cab. White light wire through door and light assembly switch. Red light through light assembly switch.	$193
1750-0181	Dome light red/white 4" incandescent for tiller cab. White light wired thru door and light assembly mounted rocker switch. Red light thru light assembly mounted rocker switch.	$140

1750-0182	Dome light red/white 4" LED for tiller cab. White light wired through door and light assembly mounted rocker switch. Red light through light assembly mounted rocker switch.	$360
1750-0186	Dome Lts Red/White Incandescent additional. White light wire through door and light assembly mounted switch. Red light through light assembly mounted switch. Location: Centered rear of cab.	$136
1750-0187	Auto drain, Kussmaul model 091-9-089 120V. For use with air compressor 091-9B-1 only.	$196
1750-0188	DPF regeneration override switch.	$191
1750-0189	Gauge ambient temperature with digital display. Locate display on officer side switch panel.	$785
1750-0192	Aerial engagement switch in cab to have a red cover (or bezel).	$36
1750-0193	Oil level sensor light in cab to indicate drop in hydraulic reservoir oil level. Interlock w/parking brake, tag to read "Power Steering System Failure, Stop Vehicle".	$133
1750-0194	Dome Lts Red/White LED additional (PR). White light wire through door and light assembly switch. Red light through light assembly switch. Location: Rear crew area.	$384
1750-0195	Cab dome lts red/white (2 red/white, 2 white) 4" incandescent. White light wired thru door and light assembly mounted rocker switch. Red light thru light assembly mounted rocker switch. Red/white located in front of cab, white located at rear cab doors.	$552
1750-0196	Battery charger Newmar model PT-80, 80amp.	$3,333
1750-0197	Clamshell controller mounted on driver's side of engine cover for the air horns.	$118
1750-0203	Special location for battery charger indicator. Location: [#LOC].	$105
1750-0205	Handheld flashlight, orange Streamlight Vulcan flashlight with vehicle mount system. Location: [#LOC].	$244
1750-0206	Clamshell controller mounted on officer's side cab dash for Q2B and air horns.	$118
1750-0208	Light Whelen model PSA00FAR LED (4) amber. Horizontal mounted flashing strip light on each of the interior lower cab door panels outboard. Wire through door switch.	$748
1750-0209	Clamshell controller mounted on on officer's side of engine cover (knee height) for Q2B.	$118
1750-0214	Mount customer supplied GPS antenna on cab roof. Location: [#LOC].	$166
1750-0215	Turn signal Whelen M6 LED arrow amber pair located [#LOC].	$616
1750-0221	Xenon HID cab headlights. CIIX and TyphoonX only.	$1,688
1750-0222	12 volt electrical outlet in the cab wired through ignition. Location: [#LOC].	$58
1750-0223	Control push button switch center electrical cover offset to officer side for air horns	$90
1750-0226	Whelen 4" round LED amber jacks down light IPOS. Model 20A00FCR light with 2FLANGEC bezel.	$178
1750-0227	Mount customer supplied antenna on cab roof. Location: (1) shark fin centered on cab roof between a/c condensor and storage box terminating below officer seat.	$166
1750-0231	Light Whelen model PSA00FAR LED (3) amber. Horizontally mounted flashing strip light on each of the interior lower cab door panels outboard. Wire through door switch.	$560
1750-0234	Digital speedometer officer's side overhead.	$546
1750-0250	Dome Lt Red/White LED additional (EA). White light wire through door and light assembly switch. Red light through light assembly switch. Location: Rear facing engine cover seat(s).	$193
1750-0252	Kussmaul mounting plate model 091-9H for 12v air compressor.	$77
1750-0256	Auto eject block heater receptacle inlet 15amp with a [#COL] cover. Location: [#LOC].	$493
1750-0257	Aerial PTO hourmeter in cab IPOS.	$128
1750-0260	Battery charger, Super Smart, 20 amp with 120V Kussmaul HP air compressor.	$1,576
1750-0261	Clamshell controller mounted on on officer's side cab dash at "A" post for Whelen Howler.	$118
1750-0262	Auto transfer switch 120 volt. Includes 8 place breaker box. Allows interior receptacles to be powered by either shore power or generator. Ship to VanMor for installation.	$720
1750-0263	Radio speakers pair. Locate each side rear cab ceiling. Wiring to terminate in center dash for customer supplied radio(s).	$259
1750-0264	Block/oil pan heater on/off 110V switch. Location: inside driver door; rear of seat.	$163
1750-0267	Battery charger Kussmaul 4000, 45 amp with air compressor.	$2,305
1750-0268	Battery charger Kussmaul 40 amp model 1200 with 120V HP air compressor.	$2,295
1750-0269	12ga dedicated ground wire to center overhead console.	$74
1750-0270	Control push-button switch officer side (side facing) of center electrical cover for Q2B siren.	$90
1750-0271	Control push-button switch officer side (side facing) of center electrical cover for air horns.	$90
1750-0275	Receptacle inlet 30amp household with a [#COL] cover. Location: [#LOC].	$525
1750-0276	Battery charger Newmar model EV-40-12-1, 40amp.	$1,382
1750-0278	Light Whelen LED strip model PSC0CDCR to illuminate cab floor. Horizontally mounted on seat riser. Wire through door switch. Location: [#LOC]	$145
1750-0283	LED cab headlights. TyphoonX, CIIX and QST2 only.	$1,812
1750-0284	Switch additional guarded toggle. Location and Function: [#LOC].	$191
1750-0285	The chassis shall be pre-wired for installation of tire chains. Includes guarded toggle switch located on the driver side diagnostic panel.	$403
1750-0286	Receptacle block heater inlet 20amp with a [#COL] cover. Location: [#LOC].	$274
1750-0289	Battery charger Kussmaul 4000, 45 amp	$1,481
1750-0300	Radio AM/FM/CD/weather band w/auxiliary input port located [#LOC].	$670
1750-0302	Control push-button switch officer side ovherhead for Rumbler.	$90
1750-0303	Aerial engagement switch to be guarded style located on the panel outboard of the steering wheel below dash.	$209
1750-0304	Radio Pioneer DEH-X 7500HD AM/FM CD/USB located [#LOC].	$923
1750-0305	Dome lts Whelen red/white 4" LED (6). Lights to be located two front and four rear. White light wired through door and light assembly mounted rocker switch. Red light through light assembly mounted rocker switch.	$2,823
1750-0306	Radio speakers additional pair Pioneer TS-G1341R. Locate each side rear cab ceiling.	$329
1750-0310	Clamshell controller mounted on officer's side of engine cover for Federal Signal Rumbler.	$118

1750-0314	Battery charger Kussmaul model 12 HO PIM, 20 amp. Includes model 091-189-12 indicator located adjacent to inlet receptacle.	$1,330
1750-0316	Switch horn button two position DOT/Rumbler.	$94
1750-0319	Control push-button switch officer side (side facing) of center electrical cover for EQ2B siren.	$90
1750-0322	Light Whelen model PSC00FCR LED (4) clear. Vertically mounted flashing strip light with 14 flash patterns including steady burn shall be mounted on the lower cab step well areas (interior). The front doors shall have (1) strip light shall be located on forward step well wall (both sides). The rear doors shall have (1) strip light shall be located on rear step well wall (both sides). Wire through door switch.	$748
1750-0323	Engine tunnel to be fitted with a position activation switch to activate engine compartment lighting when not in the fully closed position.	$472
1750-0324	Air compressor, Kussmaul model 091-9 12V.	$893
1750-0325	Pigtail, minimum of 18" of wire for service of the battery charger and air compressor.	$46
1750-0326	Auto transfer switch 120 volt. Includes 2 place breaker box. Allows interior receptacles to be powered by either shore power or generator.	$700
1750-0327	Switch momentary to activate heat option contained in mirrors for 10 minutes. The heat will automatically turn itself off after the heat activation time period (10 minutes) has expired.	$184
1750-0328	Auto transfer switch 120 volt. Includes 8 place breaker box. Allows interior receptacles to be powered by either shore power or inverter.	$720
1750-0329	Cornering light relay circuits for lights in center of rear tandem wheel well. Includes (2) relays. Requires scene light option. Interlocked with park brake.	$390
1750-0330	Dome Lt Red/White LED additional (EA). White light wire through door and light assembly switch. Red light through light assembly switch. Location: centered between rear cab dome lights.	$193
1750-0331	Control push-button switch driver side (side facing) of center electrical cover for EQ2B siren.	$90
1750-0332	Dome lights Red/White incandescent. Package includes two lights mounted in the front and two mounted in the rear of the cab Trucklite 80 series with push style on/off button (may be used with Ford chassis). White light wire through door and light assembly mounted switch. Red light through light assembly mounted switch.	$530
1750-0333	Dome lights White incandescent. Package includes two lights mounted in the front and two mounted in the rear of the cab Trucklite 80 series with push style on/off button (may be used with Ford chassis). Lights wire through door and light assembly mounted switch.	$530
1750-0334	Dome lights White incandescent. Package includes two lights mounted in the front of the cab Trucklite 80 series with push style on/off button (may be used with Ford chassis). Lights wire through door and light assembly mounted switch.	$265
1750-0335	Metric speedometer, in English dominant main cab gauge cluster.	$2,039
1750-0337	Garmin GSP 18X USB. May be mounted at E-ONE discretion on the cab roof within reach of cab 12VDC hot outlet(s).	$233
1750-0338	Radio Pioneer DEH-3300UB AM/FM CD/USB (with a pair of TS-D1302R speakers) located [#LOC].	$923
1750-0339	Radio speakers additional pair Pioneer TS-D1302R. Locate each side rear cab ceiling.	$329
1750-0340	Control push-button switch officer side (side facing) of center electrical cover for EQ2B siren brake.	$90
1750-0341	Transverse cab compartment dome light package (4) LED. Trucklite 44 series.	$547
1750-0342	Battery charger Kussmaul model 12 HO PIM, 20 amp. Includes model 091-189-12 indicator located behind driver's door adjacent to exterior handrail.	$1,330
1750-0343	Battery charger E-ONE LPC 20. 120 volt inlet, 20 amp output.	$571
1750-0344	Battery charger E-ONE LPC 40. 120 volt inlet, 40 amp output.	$869
1750-0350	Install customer supplied radio/intercom (ea). Loc: [#LOC].	$474
1750-0351	Kussmaul solar power charging system; model 092-1220-1. Location: Center rear cab roof.	$2,242
1750-0353	Dome Lts Red/White LED. Package includes two lights mounted in the front and three mounted in the rear of the cab. White light wired through door and light assembly switch. Red light through light assembly switch.	$977
1750-0355	Each 110 volt cab receptacle shall have a dedicated breaker within the breaker box. This is to provide each cab mounted receptacle (single outlet, duplex, etc. as applicable) with its own isolated circuit.	$252
1750-0356	Radio speaker (1). Locate center rear ceiling. Wiring to terminate in center overhead console for customer supplied radio.	$131
1750-0360	Auto-Eject receptacle inlet 30 amp 240 volt located [#LOC] and with a [#COL] cover.	$792
1750-0368	Dome Lts Red/White 4" LED (6). Lights to be located two front and four rear. White light wired through door and light assembly mounted rocker switch. Red light through light assembly mounted rocker switch.	$2,144
1750-0369	On-Spot activation switch shall have a red flip up safety guard. The switch shall de located on the driver side overhead panel offset to the officer side as far as possible.	$48
1750-0370	Engine hourmeter in cab.	$150
1750-0372	12 VDC (or 24VDC) electrical outlet in the cab wired battery hot with 14AWG at each seated position. Outlets are shared within the same circuit.	$229
1750-0374	Light Whelen model PSB00FBR LED (4) blue. Horizontally mounted flashing strip light on each of the inside lower cab door panels. Wire through door switch.	$748
1750-0375	Switch console mounted to the driver side engine cover.	$151
1750-0377	Additional 4" white LED dome lights (PR) for rear of cab wired battery hot to a 15 min. timer switch. Locate switch on interior officer side rear side wall just above floor level.	$454
1750-0378	Switch momentary to illuminate cab dome lighting for 15 minutes. The lights will automatically turn themselves off after the activation time period (15 minutes) has expired. Locate switch on interior officer side rear side wall just above floor level.	$237
1750-0381	Cornering light relay circuits for cab/body lights on side of unit. Includes (2) relays. Interlocked with park brake.	$390

1750-0383	Radio Jensen JHD1630B AM/FM/WB (with a pair of Polk Audio DXi525 5.25" speakers) located [#LOC].	$1,027
1750-0385	Cab step lighting package. Includes (2) EON LED lights per side IPOS. (1) Light per door mounted in the cab step well area	$237
1750-0389	Radio speakers pair. Locate (1) above officer and (1) centered in rear crew cab area. Wiring to terminate (1) center dash, (1) center overhead for customer supplied radio(s).	$259
1750-0392	Battery charger Kussmaul 75 amp model 091-149-12 with 091-9 air compressor.	$3,330
1750-0393	Switch secondary braking three position Jacobs/Off/Telma. Jacobs Brake top position, off center, Telma bottom position.	$196
1750-0395	Light EON LED to illuminate cab floor(EA). Horizontally mounted on seat riser. Wire through door switch. Location: [#LOC].	$145
1750-0396	Control push-button switch on officer's overhead for Q2B siren brake.	$90
1750-0398	Mount customer supplied GPS antenna on interior of cab. Location will be per antenna manufacturers' recommendation.	$166
1750-0399	Control push-button switch driver side of center dash upper tier for Q2B siren.	$90
1750-0401	Cornering light relay circuits for only the side facing gravel shield lights. Includes (2) relays. Requires scene light option. Interlocked with park brake.	$390
1750-0404	Dome lights Whelen red/white 6" Super-LED surface mounted interior lights. Four (4) model 60CREGCS lights to be located two front and two rear. White light wired through door and light assembly. Red light through switch mounted on light assembly.	$1,267
1750-0405	Battery charger Kussmual model 091-200-12-194-WT-RD. 120 Volt 40 Amp output includes water tight display mounted adjacent to inlet.	$1,667
1750-0406	The air horn(s) shall not be included within the Multiplex system (separate switching from Multiplex display required).	$366
1750-0407	Control push-button switch for Rumbler. Location [#LOC].	$90
1750-0410	Switch, additional through multiplex display. Function: [#LOC].	$86
1750-0411	Dome Lts Red/White Whelen model 60CREGCS LED. Package includes two lights mounted in the front and four mounted in the rear of the cab. White light wired through door and light assembly switch. Red light through light assembly switch.	$1,578
1750-0412	Kussmaul digital battery display model 091-194-IND-WT-RD in place of standard.	$326
1750-0414	Warning light Whelen M6R series Linear Super LED (PR) red. Location: interior of canopy doors wired through each door ajar switch only.	$675
1750-0415	Dome Lt Red/White LED additional (EA). White light wire through door and light assembly switch. Red light through light assembly switch. Location: Below forward vista medical cabinet.	$193
1750-0417	Flexible 1" conduit with connectors. Location: radio cabinet to center of dash.	$286
1750-0426	Turn signal Weldon LED amber pair located [#LOC].	$514
1750-0429	Dual USB charging ports in the cab wired battery hot. Location: [#LOC].	$65
1750-0431	Conduit flexible 1" for radio installation center of dash to area behind officer's seat.	$286
1750-0433	Battery charger Kussmaul LPC 80. 120 volt inlet, 80 amp output.	$1,595
1750-0434	Radio cabinet ventilation fan (PR). Location: ceiling of radio cabinet wired through ignition.	$206
1750-0436	Dome Lt Red/White LED additional (EA). White light wire through door and light assembly switch. Red light through light assembly switch. Location: center between front cab seats.	$193
1750-0437	The chassis shall be pre-wired for installation of tire chains. Includes guarded toggle switch located on the center dash panel.	$403
1750-0438	Radio AM/FM CD with weather band located [#LOC]. Includes speakers in ceiling to rear of driver/officer.	$766
1750-0439	Dome Lt Red/White Whelen model 60CREGCS LED additional (EA). White light wired through door and light assembly switch. Red light through light assembly switch. Location: center rear crew cab ceiling.	$317
1750-0440	Switch horn button three position DOT/air horn/electronic siren. Wired through multiplex display screen.	$191
1750-0441	Battery charger Kussmaul model EV40, 40 amp.	$1,448
1750-0442	Light EON LED (EA). Horizontally mounted in seat riser. Wire through door switch. Location: officer seat riser.	$145
1750-0445	Clamshell controller mounted on center console offset to officer side for air horns.	$118
1750-0447	Dome Lts Red/White Whelen model 60CREGCS LED. Package includes two lights mounted in the front and two mounted in the rear of the cab. White light wired through door and light assembly switch. Red light through light assembly switch.	$1,053
1750-0448	Light Whelen model PSRASXCR LED (4) red/amber. Horizontally mounted flashing strip light on each of the inside lower cab door panels. Wire through door switch.	$777
1750-0449	Momentary DPF regeneration override switch.	$191
1750-0451	Steering wheel with switch pods IPOS. Includes wiper functions, master warning sw, air horn sw, aux brake on/off and (3) aux switches. For use only with Typhoon and CII NOT equipped with 4Front. (Requires seperate programming options to activate aux switches)	$860
1750-0452	Radio speakers (3). Locate officer ceiling and each side rear cab ceiling. Wiring to terminate in center overhead console for customer supplied radio(s).	$445
1750-0453	Auto transfer switch 120 volt. Includes 12 place breaker box. Allows interior receptacles to be powered by either shore power or generator.	$758
1750-0454	Courtesy light for driver and officer located on front of risers wired through marker lights. Whelen model 0SR00SCR light.	$241
1750-0455	Block heater connector; 15 amp male. Location: driver side under front bumper adjacent to frame rail.	$95
1750-0457	Turn signal Whelen 600 LED amber arrow pair with black bezel located [#LOC].	$658
1750-0458	Quad bezels (4) black ipos.	$242

1750-0460	Light Whelen model PSR00FRR LED (4) red. Horizontally mounted flashing strip light on each of the inside cab door panels below the windows. Wire through door switch.	$748
1750-0462	Turn signal Whelen M6 LED arrow amber pair with clear lenses located [#LOC].	$616
1750-0464	Dome Lt Red/White Whelen model 60CREGCS LED. One (1) light centered between driver/officer in the ceiling. White light wired through door and light assembly switch. Red light through light assembly switch.	$317
1750-0466	DEF level gauge adjacent to tank fill area.	$330
1750-0468	Relocate driver master power window controls and officer front window control to center upper tier.	$391
1750-0470	Relocate driver master power window controls to cab dash upper tier offset to driver.	$391
1800-0000	Cooling system for 2004 compliant engines, Typhoon only.	$5,824
1800-0001	Cooling for EGR engines. Includes charge air cooler.	$6,036
1800-0003	Coolant System Overflow Recovery System, CRS-150	$525
1800-0005	Cooling system for use with Cyclone II X, Typhoon X, and Quest chassis. Includes coolant recovery system.	$6,036
1800-0006	Remote coolant filter for engine cooling system (Cummins ISC and ISL engines only).	$517
1800-0013	Cooling system for use with Cyclone II X, Typhoon X, and Quest chassis. For use with 2010/2013 EPA engines. Includes coolant recovery system.	$6,801
1800-0023	Cooling for Pre-2004 export engines. Includes charge air cooler.	$6,036
1800-0024	Ball valve drain for radiator ipo petcock valve.	$105
1800-0025	Cooling system for use with Navistar MAXXFORCE MF13 2010 EPA engine in Cyclone II X and Quest chassis. Includes coolant recovery system.	$9,592
1800-0026	Plug shall be installed in drain of radiator IPO petcock valve.	$62
1800-0027	Cummins Compleat (blue) 50/50 pre-mixed antifreeze ipos.	$266
3000	**Body**	
3080-0000	Body aerial 95/CR100 CII/Quest medium cab without pump. 100" wide with L and R extended rescue style high sides and rear side staircases. 61" high body for 11'-10" OAH.	$54,529
3080-0001	Body aerial 95/CR100 with center hose bed. Configured for midship pump and 300 tank. 100" wide with L and R extended rescue style high sides and double beavertails. 63" high body for 12'-1" OAH	$64,325
3080-0004	Body aerial HM100/110 with center hose bed. Configured for midship pump and 500 tank. 100" wide with L and R extended rescue style high sides and double beavertails. 67" high body for 11'-6" OAH.	$61,287
3080-0005	Body aerial HM100/110 CII without pump. 100" wide with L and R extended rescue style high sides and double beavertails. 67.25" high body for 11'-5" OAH.	$54,656
3080-0006	Body aerial HP100 CII without pump. 100" wide tandem axle. (220" WB medium cab / 230" WB long cab). Includes L and R extended rescue style high sides and double beavertails.	$56,627
3080-0007	Body aerial HP100 with center hose bed. Configured for midship pump and 500 tank. 100" wide body with (230" wheelbase medium cab/240" wheelbase long cab) tandem axle. Includes L and R extended rescue style high sides and double beavertails.	$64,979
3080-0008	Body aerial HP75 / HP78 with center hose bed. Configured for midship pump and 400-500 tank. Single axle 100" wide body. Includes L and R rescue style high sides. The rear turntable access door to match the rear body finish.	$41,510
3080-0010	Body aerial HP75 / HP78 SideStacker Quest / CII / Typhoon with pump. Single axle. Includes pocket style drop down step at left rear staircase. The rear access doors to match the rear body finish.	$46,024
3080-0030	Tiller body without pump. Includes tool compartment at rear of body below ladder tunnel and staircases with pocket style flop down steps each side of tractor body.	$59,670
3080-0031	HP95 MidMount front body with pump.	$19,716
3080-0032	HP95 MidMount front body without pump.	$19,754
3080-0033	HP95 MidMount front body without pump low travel height (for use with DPF / SCR aftertreatment).	$18,822
3080-0034	HP95 MidMount center body with pump and 300g tank.	$16,820
3080-0035	HP95 MidMount center body with pump and 500g tank.	$16,820
3080-0036	HP95 MidMount center body with pump and 300g tank. Includes optional officer's side compartment above rear wheels.	$17,077
3080-0037	HP95 MidMount center body with pump and 500g tank. Includes optional officer's side compartment above rear wheels.	$17,077
3080-0038	HP95 MidMount center body without tank.	$15,923
3080-0039	HP95 MidMount center body without pump with wide ladder tunnel.	$17,108
3080-0040	HP95 MidMount center body without pump low travel.	$16,762
3080-0041	HP95 MidMount rear body with hosebed.	$23,547
3080-0042	HP95 MidMount rear body without hosebed.	$24,576
3080-0043	HP95 MidMount rear body with narrow hosebed and shallow rescue style officer's side compartments.	$25,449
3080-0044	HP95 MidMount rear body with wide ladder tunnel and no hosebed.	$24,576
3080-0045	HP95 MidMount rear body without hosebed low travel.	$23,212
3080-0046	HP95 MidMount center body with pump and 300g tank. Includes optional officer's side shallow compartment above rear wheels.	$17,686
3080-0047	HP95 MidMount center body with pump and 500g tank. Includes optional officer's side shallow compartment above rear wheels.	$17,686
3080-0054	Body aerial 95/CR100 CII with pump and 500g tank. 100" wide with L and R extended rescue style high sides and double beavertails.	$64,325
3080-0057	Body aerial HP100 Platform without pump. 100" wide with L and R extended rescue style high sides, seperate rear side compartments and rear side staircases. The door on small compt next to rear outrigger to match wheelwell.	$54,529

3080-0059	Body aerial HM100 CII without pump - Memphis. Includes left side traditional style extended high sides, combined pltwrk in L6/L7 and L8/L9, half right side with DP panels above and double beavertails. Trans floor 3/16 Dia Plt, others 3/16 SM Plt. Manual cab tilt in R1. 69.25" high body for 11'-7" OAH.	$55,275
3080-0064	Body aerial HP75 / HP78 SideStacker Quest / CII / Typhoon with pump. Single axle. Includes extended R1 compt and pocket style drop down step at left rear staircase. The rear access doors to match the rear body finish.	$46,024
3080-0065	Body aerial HP100 with center hose bed. Configured for midship pump and 300 tall tank. 100" wide body with 230" wheelbase tandem axle. Includes L and R extended rescue style high sides, single right side hose chute and double beavertails.	$67,278
3080-0066	Body aerial HP75 / HP78 with center hose bed. Configured for midship pump and 400-500 tank. Single axle 100" wide body. Includes L and R rescue style extended high sides. The rear turntable access door to match the rear body finish.	$43,705
3080-0067	Body aerial HP75 / HP78 with combined extended height front side compts, beavertail compts combined w/rear side compts and center hose bed. Configured for midship pump and 400-500 tank. Single axle 100" wide body. The rear turntable access door to match the rear body finish.	$47,244
3080-0069	Body aerial HP75 / HP78 SideStacker Quest / CII / Typhoon with pump. Single axle. Right side ahead of rear axle to have two seperate compts, 24"w R1 and 32"w R2. Includes pocket style drop down step at left rear staircase. The rear access doors to match the rear body finish.	$46,919
3080-0070	Body aerial 95/CR100 CII/Quest medium cab without pump. 100" wide with Left extended rescue style high side, right half side with recessed area above for horizontal ladder storage and rear side staircases. 61" high body for 11'-10" OAH.	$58,101
3080-0071	Body aerial 95/CR100 CII/Quest long cab without pump. 100" wide with L and R extended rescue style high sides and rear side staircases. 61" high body for 11'-10" OAH.	$54,529
3080-0072	Tiller body - without pump. Includes tractor body w/12" wide compts (140" WB w/58" cab), trailer body with raised compts (L2/R2-L6/R6), 50" wide ladder tunnel, tool compartment at rear of body below ladder tunnel and staircases with pocket style flop down steps each side of tractor body.	$62,407
3080-0073	Body aerial HP100 CII without pump. 100" wide tandem axle. (230" WB medium cab). Includes L and R extended rescue style high sides and double beavertails.	$59,419
3080-0074	Body aerial HP100 Platform 250" WB 67.5/68 cab without pump. 100" wide with L and R extended rescue style high sides, seperate rear side compartments (tall compartment to be ahead of outrigger) and rear side staircases. The door on small compt to rear of rear outrigger to match wheelwell.	$53,981
3080-0075	Tiller body - without pump. Includes tractor body w/22"w compts (150" WB w/58" cab), raised trailer body (L2/L3/L4/L5/L6, R2/R3/R4/R5/R6, 50" wide ladder tunnel, tool compartment at rear of body below ladder tunnel and staircases with pocket style flop down steps each side of tractor body.	$63,502
3080-0080	Body aerial HM100/110 CII without pump. 96" wide with L and R ladder recesses, 16 wide forward upper compt (IPO trans), (3) upper storage compartments (two trans),and double beavertails. Manual cab tilt pump located low in R1 against forward wall. 61.25" high body for low OAH. Requires troughed cab.	$65,874
3080-0087	Body aerial HM100/110 CII without pump. 96" wide with L and R ladder recesses, 20 wide forward upper compt (IPO trans), (3) upper storage compartments (two trans), and double beavertails. Manual cab tilt pump located low in R1 against forward wall. 61.25" high body for low OAH. Requires troughed cab.	$65,874
3080-0096	Body aerial HP100 Platform 250" WB 67.5/68 cab without pump. 100" wide with L and R extended rescue style high sides, seperate rear side compartments (tall compartment to be rearward of outrigger) and rear side staircases. The door on small compt next to rear outrigger to match wheelwell.	$53,981
3080-0097	HP95 MidMount front body without pump. Includes a compt on each side ahead of waterway inlet with a vert hinged double pan painted door.	$21,623
3080-0098	HP95 MidMount rear body with wide ladder tunnel and no hosebed or staircase.	$24,576
3080-0100	Body aerial 95/CR100 CII extended aerial cab without pump (245" WB). 100" wide with L and R extended rescue style high sides and rear side staircases. 58" high body for 11'-7" +or-1" OAH. Requires troughed cab.	$58,678
3080-0143	Body aerial HM100/110 ladder without pump (172 C/A for use with DPF/SCR aftertreatment). 100" wide with L and R extended rescue style high sides and double beavertails. 67" high body for 11'-5" OAH.	$55,694
3080-0144	Body aerial HP100 ladder without pump (172 C/A for use with DPF/SCR aftertreatment). 100" wide tandem axle. (230" WB medium cab / 240" WB long cab). Includes L and R extended rescue style high sides and double beavertails.	$57,147
3080-0145	Body aerial 95/CR100 medium cab without pump (187 C/A for use with DPF/SCR aftertreatment). 100" wide with L and R extended rescue style high sides and rear side staircases. 61" high body for 11'-10" OAH.	$54,529
3080-0146	Body aerial HP100 Platform without pump (192 C/A for use with DPF/SCR aftertreatment). 100" wide with L and R extended rescue style high sides, seperate rear side compartments and rear side staircases. The door on small compt next to rear outrigger to match wheelwell.	$54,529
3080-0148	HP95 MidMount front body without pump (for use with DPF / SCR aftertreatment).	$19,754
3080-0149	HP95 MidMount front body without pump low travel height (for use with DPF / SCR aftertreatment).	$18,822
3080-0150	Body aerial HP75/78 with combined standard height front side compts and center hose bed. Configured for midship pump and 400-500 tank. Single axle 100" wide body.	$43,714
3080-0151	Body aerial 95/CR100 CII/Quest long cab without pump (177 C/A for use with DPF/SCR aftertreatment). 100" wide with L and R extended rescue style high sides and rear side staircases. 61" high body for 11'-10" OAH.	$54,529

3080-0152	Body aerial HP100 Platform without pump. 100" wide with L and R extended rescue style high sides, separate rear side compartments and rear side staircase (left side only). The door on small compt next to rear outrigger to match wheel well.	$54,529
3080-0154	Body aerial 95/CR100 with center hose bed. Configured for 250" wheel base, long cab, midship pump and 300 tank. 100" wide with L and R extended rescue style high sides and double beavertails.	$64,325
3080-0155	Body aerial HP100 with center hose bed. Configured for midship pump and 500 tank. 100" wide body with 230" wheelbase tandem axle. Includes L and R extended rescue style high sides and single access staircase at center rear of body. The rear turntable access door to match the rear body finish.	$67,055
3080-0156	SS body with lowered aerial HP100 Platform, fire pump without tank/hose bed (body lowered 2"). 100" wide with L and R extended rescue style high sides, combined rear side compartments and rear side staircases. The doors on small compts next to rear outriggers to be drop-down stainless steel.	$72,089
3080-0157	Body aerial HP100 Platform without pump. 100" wide with L and R extended rescue style high sides, combined rear side compartments and rear side staircases. The doors on small compts next to rear outrigger to match wheelwell.	$54,529
3080-0158	Body aerial HM100/110 without pump, 230" wheelbase with medium cab. 100" wide with L and R extended rescue style high sides, L1 hydraulic oil reservior location and double beavertails. 61" high body for low OAH. Requires troughed cab.	$61,402
3080-0159	Body aerial HM100/110 without pump, 220" wheelbase with medium cab. 100" wide with L and R extended rescue style high sides, L1 hydraulic oil reservior location and double beavertails. 61" high body for 10'-11" (+or-1") OAH. Requires troughed cab.	$61,402
3080-0162	Body aerial HM100/110 without pump, 220" wheelbase with medium cab. 100" wide with L and R extended rescue style high sides, L1 hydraulic oil reservoir location and double beavertails. 64" high body for 11'-3" OAH. Requires troughed cab (if applicable).	$61,402
3080-0163	Body aerial HM100/110 without pump, 220" wheelbase with medium cab. 100" wide with L and R extended rescue style high sides, L1 hydraulic oil reservoir location and double beavertails. 67" high body for 11'-5" OAH.	$54,656
3080-0164	Body aerial HP75 / HP78 SideStacker Quest / CII / Typhoon with pump. Single axle. 65" body height for low OAH applications. Includes extended R1 compt and pocket style drop down step at left rear staircase. The rear access doors to match the rear body finish.	$46,024
3080-0165	Stainless steel body aerial HP75 / HP78 with center hose bed. Configured for midship pump and 400 tank. Single axle 100" wide body. Includes L and R rescue style high sides. The rear turntable access door to match the rear body finish.	$48,712
3080-0166	Stainless steel body aerial HP75 / HP78 SideStacker Quest / CII / Typhoon with pump. Single axle. Includes pocket style drop down step at left rear staircase. Includes full length of body right side hose bed. The rear access doors to match the rear body finish.	$54,162
3080-0167	Stainless steel body aerial HP75 / HP78 SideStacker Quest / CII / Typhoon with pump. Single axle. Includes full height R1 compartment and pocket-style drop-down step at the left rear staircase, and a shortened hose bed length. The rear access doors to match the rear panel body finish.	$54,162
3080-0168	Stainless Steel Body aerial HP75 / HP78 with center hose bed. Configured for midship pump and 400 gal tank. Single axle 100" wide body. Includes L and R rescue style extended high sides. The rear turntable access door to match the rear body finish.	$50,697
3080-0169	Stainless steel Body aerial HP75 / HP78 with combined extended height front side compts, beavertail compts combined w/rear side compts and center hose bed. Configured for midship pump and 400 gal tank. Single axle 100" wide body. The rear turntable access door to match the rear body finish.	$54,804
3080-0170	Stainless Steel Body aerial HP75 / HP78 SideStacker Quest / CII / Typhoon with pump. Single axle. Right side ahead of rear axle to have two separate compts, 24"w R1 and 32"w R2. Includes pocket style drop down step at left rear staircase. The rear access doors to match the rear body finish.	$54,425
3080-0171	Stainless Steel Body aerial HP75 with combined standard height front side compts and center hose bed. Configured for midship pump and 400 gal tank. Single axle 100" wide body.	$50,709
3080-0172	Stainless Steel Body aerial HP75 / HP78 SideStacker Quest / CII / Typhoon with pump. Single axle. 65" body height for low OAH applications. Includes extended R1 compt and pocket style drop down step at left rear staircase. The rear access doors to match the rear body finish.	$52,185
3080-0173	Body aerial 95/CR100/137 CII/Quest long cab without pump (177.5 C/A for use with DPF/SCR after treatment). 96" wide body. Left side to include extended rescue style high side L1/L2, recessed area for horizontal ladder storage and additional compartment to rear of ladders. Right side to be extended rescue style high side. Body includes upper transverse storage in L2/R2 upper, 3/16" upper body plate work, rear of body raised 4" aft of rear jack legs and rear side staircases. 61" high body for 11'-10" +or-1" OAH.	$58,929
3080-0174	Body aerial HP100 Platform without pump. 100" wide with L and R extended rescue style high sides, seperate rear side compartments and rear side staircases. Rear of body raised 4" for improved angle of departure. The door on small compt next to rear outrigger to match wheelwell.	$54,529
3080-0175	Body aerial 95/CR100 medium cab without pump (187 C/A for use with DPF/SCR aftertreatment). 100" wide with L and R extended rescue style high sides and rear side staircases. 58" high body for 11'-7" +or-1" OAH. Requires troughed cab.	$58,678
3080-0176	Body aerial HP100 ladder without pump (172 C/A for use with DPF/SCR aftertreatment). 100" wide tandem axle. (230" WB medium cab / 240" WB long cab). Includes L and R extended rescue style high sides, provisions for L1 hydraulic reservoir and double beavertails.	$57,147
3080-0188	HP95 MidMount center body without crosslays includes tank, 3/16" smooth plate compartment floors and wide ladder tunnel.	$18,125

3080-0195	HP95 MidMount front body with pump and 3/16" smooth plate compartment floors (for use with DPF / SCR aftertreatment).	$20,021
3080-0196	HP95 MidMount rear body with 3/16" smooth plate compartment floors, wide ladder tunnel and no hosebed or staircase.	$29,662
3080-0197	HP95 MidMount front body with pump and 3/16" smooth plate compartment floors.	$20,021
3080-0198	Body aerial HP75 / HP78 SideStacker Quest / CII / Typhoon with pump. Single axle. Includes 3/16" diamond plate floors for all compartments, pocket style drop down step at left rear staircase. The rear access doors to match the rear body finish.	$46,227
3080-0199	Body aerial 95/CR100 CII/Quest medium cab without pump (187 C/A for use with DPF/SCR aftertreatment). 100" wide with L and R extended rescue style high sides and double beavertails. 63" high body for 12'-1" OAH.	$54,529
3080-0200	Body aerial HP100 Platform 260" WB 80" cab without pump (180 C/A for use with DPF/SCR aftertreatment). 100" wide with L and R extended rescue style high sides, separate rear side compartments and rear side staircases. The door on small compt next to rear outrigger to match wheelwell.	$53,981
3080-0201	Body aerial 95/CR100 medium cab without pump (187 C/A for use with DPF/SCR aftertreatment). 100" wide with L and R extended rescue style high sides and rear side staircases. Includes rear perimeter of body aft of rear jack legs raised 4" to improve angle of departure. 61" high body for 11'-10" OAH.	$54,529
3080-0202	Body aerial HM100/110 ladder without pump (172 C/A for use with DPF/SCR aftertreatment). 100" wide with L and R extended rescue style high sides and double beavertails. 64" high body for 11'-2" +/-1" OAH. Requires troughed cab (if applicable).	$61,402
3080-0204	Body aerial single axle LTH100 without pump (162 C/A for use with vertical SCR aftertreatment). 96" wide with L and R rescue style high sides and rear side staircases. Rear of body aft of rear jack legs raised 3". 61" high body. (10'-7" OAH with no wway, 10'10" OAH with wway).	$55,694
3080-0207	Low profile cab stainless steel body aerial HP75 / HP78 SideStacker Quest / CII / Typhoon with pump, body lowered by 4" to 65" high. Single axle. Includes pocket style drop down step at left rear staircase. Includes full length of body right side hose bed. The rear access doors to match the rear body finish.	$54,162
3080-0215	Body aerial HP75 / HP78 SideStacker Quest / CII / Typhoon with pump for industrial applications. Single axle. Includes extended R1 compt and pocket style drop down step at left rear staircase. The rear access door to match the rear body finish.	$46,024
3080-0216	Body aerial HM100/110 CII/Quest long cab ladder without pump (162.5" C/A for use with DPF/SCR aftertreatment). 100" wide with L and R extended rescue style high sides, L1 hydraulic oil reservoir and double beavertails. 64" high body for 11'-2" +/-1" OAH. Requires troughed cab (if applicable).	$61,402
3080-0217	Body aerial HP100 ladder without pump (172 C/A for use with DPF/SCR aftertreatment). 100" wide tandem axle. (230" WB medium cab / 240" WB long cab). Includes L and R extended rescue style high sides, provisions for L1 hydraulic reservoir and double beavertails. 61" high body for low OAH. Requires troughed cab.	$61,114
3080-0218	Body aerial HP100 ladder without pump (172 C/A for use with DPF/SCR aftertreatment). 100" wide tandem axle. (230" WB medium cab / 240" WB long cab). Includes L and R extended rescue style high sides and dual rear side staircases. 64" high body for 11'-9" OAH.	$57,641
3080-0219	Body aerial single axle LTH100 without pump (162 C/A for use with vertical SCR aftertreatment). 100" wide with L and R rescue style extended high sides and rear side staircases. Rear of body aft of rear jack legs raised 3". 61" high body. (10'-7" OAH with no wway, 10'10" OAH with wway).	$57,678
3080-0220	Body eMAX aerial HP75/78 with combined standard height front side compts and center hose bed. Configured for midship pump and 400-500 tank. Single axle 100" wide body.	$43,714
3080-0224	Body aerial HM100/110 ladder without pump (172 C/A for use with DPF/SCR aftertreatment). 100" wide with L and R extended rescue style high sides and dual rear side staircases. 67" high body for 11'-5" OAH.	$57,678
3080-0227	Body aerial HP100 Platform 250" WB 67.5/68 cab without pump (182" C/A for use with DPF/SCR aftertreatment). 100" wide with L and R extended rescue style high sides, seperate rear side compartments, upper 70" wide open storage beneath aerial and rear side staircases. Rear of body raised 4" for improved angle of departure. The doors on small compts next to rear outrigger to match wheelwell.	$55,965
3080-0228	Body aerial HP75/78 SideStacker CII with pump. Single axle. 62" body height for low OAH applications. Includes pocket style drop down step at left rear staircase. The rear access doors to match the rear body finish.	$46,024
3080-0229	Body aerial HP100 with 3" lower center hose bed body. Configured for midship pump and 450 tank. 100" wide body with 230" wheelbase tandem axle. Includes L and R extended rescue style high sides and double beavertails.	$67,955
3080-0231	Body aerial 95/CR100 medium cab without pump (187 C/A for use with DPF/SCR aftertreatment). 100" wide with L and R extended rescue style high sides and rear side staircases. 58" high body for 11'-7" +or-1" OAH. Requires troughed cab.	$58,678
3080-0232	Body aerial HP100 ladder without pump (172 C/A for use with DPF/SCR aftertreatment). 100" wide tandem axle. (230" WB medium cab / 240" WB long cab). Includes L and R extended rescue style high sides, center front of body mounted aerial hydraulic reservoir and double beavertails. 61" high body for low OAH. Requires troughed cab.	$61,114
3080-0234	Body aerial HP75 / HP78 with combined standard height front side compts, beavertail compts combined w/rear side compts and center hose bed. Configured for midship pump and 400-500 tank. Single axle 100" wide body. The rear turntable access door to match the rear body finish.	$43,922

3080-0235	Body aerial HP75 / HP78 SideStacker Quest / CII / Typhoon with pump for industrial applications. Single axle. Includes pocket style drop down step at left rear staircase. The rear access door(s) to match the rear body finish.	$46,024
3080-0238	Body aerial HP100 Platform without pump (192 C/A for use with DPF/SCR after treatment). 100" wide with L and R extended rescue style high sides, left side combined rear compartment with rear side staircase, right side rear compartment IPO rear side staircase . The doors on small compartments next to rear outriggers to match wheel well.	$54,529
3080-0241	Body aerial HP100 ladder 240" WB 80" cab without pump (160 C/A for use with DPF/SCR aftertreatment). 100" wide with L and R extended rescue style high sides, extra deep open storage beneath aerial and double beavertails.	$56,663
3080-0247	Body aerial 95/CR100 with center hose bed for 250" W/B. Configured for midship pump and 300 tank (192 C/A for use with DPF/SCR aftertreatment). 100" wide with L and R extended rescue style high sides, and double beavertails. 63" high body for 12'-1" OAH.	$67,066
3090-0019	Body Specs - SideStacker aerial with tandem axle. Includes left rear staircase with pocket style drop down step and 3/16" smooth plate compartment floors.	$1,289
3100-0317	Horizontal partition located in driver side roof top compartment over DOT bottles. Floor to be provided above the DOT bottles to use remaining area above.	$863
3110-0027	Rear of body to have un-painted extrusions with un-painted smooth plate body panels or just unpainted smooth plate to facilitate rear body striping.	$241
3110-0028	Rear body panels to be painted smooth plate.	$844
3110-0058	Rear of body to have flush un-painted smooth plate body panels to facilitate rear body striping.	$1,244
3110-0072	Rear of body to have flush painted smooth plate body panels.	$1,521
3110-0079	Rear of body to have painted extrusions with un-painted smooth plate body panels to facilitate rear body panel striping.	$241
3110-0171	Rear of stainless steel aerial body to have un-painted smooth plate panels to facilitate rear body striping.	$279
3110-0224	Rear body panels to be upgraded from smooth aluminum plate to un-painted smooth FRP.	$260
3110-0244	Single Low Rear Compartment with Officer Side Storage Tunnel. For use with low hosebed. Includes smooth plate panels and storage access door with push button latch.	$1,086
3110-0291	Single Low Rear Compartment with Officer Side Storage Tunnel. For use with low hosebed. Includes smooth plate panels and storage access door with d-ring latch.	$1,086
3120-0486	Vertical and horizontal partitions located in officer side roof top compartment. Vertical partition located rearward of electric cord reel and horizontal partition located over DOT bottles. Floor to be provided above the DOT bottles to use remaining area above.	$1,179
3130-0024	Upper SM pump module with diamond plate storage pan (only).	$1,517
3130-0059	Pump module HP75 / HP78. Includes running boards.	$7,082
3130-0282	Stainless steel 46" wide lower pump module. Includes side running boards with Bustin Tread inserts.	$4,739
3130-0291	Upper SM stainless steel pump module with single stacked triple crosslays and top open storage with treadplate flooring.	$1,752
3130-0421	eMAX Pump module HP75/78. Includes enclosed pump panel, compt on officer side (opposite pump panel), lower and upper storage areas, center front pump access doors, removable center floor in upper area, storage pan and boom support diamond plate filler panels. Lower storage area to hold (1) tray for 200' of 1.75" DJ preconnected hose and (1) tray for 200' of 2.5" DJ preconnected hose. Upper storage area to hold (1) tray for 200' of 1.75" DJ preconnected hose offset to rear and storage area for (2) backboards vertically stored offset forward w/sleeve each side of center pump access.	$7,979
3130-0423	Stainless steel pump module HP75 / HP78. Includes running boards with Bustin Tread inserts.	$8,215
3130-0471	eMAX Forward body extension for aerial application. Includes a lower double preconnect storage area, upper transverse storage area, center front pump access doors, removable center floor in upper area, upper storage pan, and boom support diamond plate filler panels.	$2,355
3130-0482	eMAX Pump module HP75/78. Includes enclosed pump panel, compt on officer side (opposite pump panel), lower and upper storage areas, center front pump access doors, removable center floor in upper area, storage pan and boom support diamond plate filler panels. Lower storage area to hold (1) tray for 200' of 3" DJ preconnected hose offset to rear and storage area for (2) backboards vertically stored offset forward w/sleeve each side of center pump access. Upper storage area for dry storage.	$7,979
3130-0490	Speedlay/crosslay HP75/78 module(stacked) for triple speedlays and double crosslay above. Includes 44" wide pump panel opening, running boards, upper area dunnage pan, lower storage compartments with push button latches and boom support diamond plate filler panels. Lower for (2) 1.75" speedlays to hold 150' of 1.75" DJ hose in each. Upper for (1) 2.5" speedlay to hold 200' of 2.5" DJ hose. Speedlays to utilize removable tray(s). Upper crosslay storage to hold up to 100' of 1.75" DJ (forward) and 400' of 2.5" DJ (rearward).	$7,462
3130-0521	eMAX Pump module HP75/78. Includes enclosed pump panel, compt on officer side (opposite pump panel), lower and upper storage areas, center front pump access doors, removable center floor in upper area, storage pan and boom support diamond plate filler panels. Lower storage area to hold (1) tray for 200' of 1.75" DJ preconnected hose and (1) tray for 200' of 2.5" DJ preconnected hose. Upper storage area to hold (1) tray for 200' of 1.75" DJ preconnected hose offset to rear of transverse storage area w/sleeve each side of center pump access. Label TRANSVERSE STORAGE (IPO BACK BOARD STORAGE).	$7,979
3130-0541	eMAX Forward body extension for aerial application. Includes lower and upper storage areas, center front pump access doors, removable center floor in upper area, storage pan and boom support diamond plate filler panels. Lower storage area to hold (2) trays for 200' of 1.75" DJ preconnected hose each. Upper storage area to hold (1) tray for 200' of 2.5" DJ preconnected hose.	$3,049

3130-0564	eMAX Pump module HP75/78. Includes enclosed pump panel, compt on officer side (opposite pump panel), lower and upper storage areas, center front pump access doors, removable center floor in upper area, storage pan and boom support diamond plate filler panels. Lower storage area to hold (2) preconnected hose storage trays. Upper storage area to to have provision for (2) backboards vertically stored offset forward w/sleeve each side of center pump access.	$7,979
3130-0602	Dunnage pan notch. Located in the pump module. Pan to have a notch on the rear wall for the ladders to extend into.	$254
3130-0611	eMAX Pump module HP75/78. Includes enclosed pump panel, compt on officer side (opposite pump panel), lower and upper storage areas, center front pump access doors, removable center floor in upper area, storage pan and boom support diamond plate filler panels. Lower storage area to hold (1) tray for 200' of 1.75" DJ preconnected hose and (1) tray for 200' of 2.5" DJ preconnected hose. Upper storage area to hold (1) tray for 200' of 1.75" DJ preconnected hose and for dry storage (1) tray for 200' of 2.5" DJ hose.	$7,979
3130-0632	Upper SM pump module with diamond plate storage pan and storage compartment. Storage compartment located forward of storage pan. Includes (1) full height adjustable divider and vertically hinged stainless steel door each side and push button latches.	$4,525
3130-0633	Upper stainless steel pump module with single stacked triple crosslays and top open storage with treadplate flooring. Crosslay floors lowered to approximately 66" above ground. Crosslay plumbing terminates at side panels below beds.	$2,736
3134-0006	The single gauge panel on the driver's side of the side mount module is to be hinged downward. Includes two (2) cable hold opens, and latches.	$129
3134-0009	The gauge panel(s) on the driver side of the Side Mount module to be hinged upward. Includes two (2) gas shock hold opens and latches.	$129
3134-0011	Officer side pump panel to be vertical hinged on forward extrusion. Panel(s) to be secured in the closed position with push button latches. Upper panel to be held open with gas shock.	$476
3134-0019	The driver and officer side pump panels are to be painted Zolatone black.	$605
3134-0020	The driver and officer side pump panels are to be painted Zolatone gray.	$605
3134-0028	Pump panel layout and approval drawing to match existing and/or previous unit. To match as close as possible (Engineering and/or vendor requirements may alter final panel layout).	$402
3134-0039	The gauge panel on the driver side pump panel is to be hinged upward. Includes two spring type hold opens, two trigger latches, and a recessed handle.	$129
3134-0053	Officer side pump panel Escutchion Plate shall be attach with Thumb Latch.	$171
3134-0055	Officer side upper pump access panel to be horizontal hinged with stainless steel door. Includes (2) push button latches and (2) hold open devices.	$202
3134-0064	The gauge panel(s) on the driver side of the Side Mount module to be hinged upward. Panel(s) to include (2) mechanical/pneumatic (as applicable to panel size) hold opens and latches.	$129
3134-0072	Driver and officer side mounted pump panels are to be brushed stainless steel.	$521
3134-0082	Driver side pump panel Escutchion Plate shall be hinge forward. Include thumb Latches.	$257
3134-0088	The side pump intake / discharge panels to be painted Zolatone black. eMAX only.	$299
3134-0089	Pump operator control panel in driver side forward body compartment to be painted Zolatone black. eMAX only.	$379
3134-0104	Officer side upper pump access panel behind crosslays to be horizontally hinged with stainless steel door. Includes (2) push button latches and (2) hold open devices.	$202
3134-0106	Officer side pump panel escutchion plate shall be around each discharge, and pump intakes.	$169
3134-0113	Officer side upper pump access panel to be horizontally hinged with aluminum smooth plate door painted Zolatone black both sides. Includes (2) push button latches and (2) hold open devices.	$241
3134-0134	Officer side upper pump access panel to be horizontally hinged with smooth plate door painted Zolatone to match lower panels. Includes (2) push button latches and (2) hold open devices.	$202
3134-0136	The side upper module panels/ access smooth plate doors to be painted Zolatone black. eMAX only.	$299
3134-0140	Officer side upper pump access panel to be horizontally hinged with smooth plate door painted Zolatone to match lower panels. Includes (2) push button latches and (1) hold open device.	$202
3134-0146	Officer side upper pump access panel to be horizontally hinged with stainless steel door. Includes (2) push button latches and (1) hold open device.	$202
3136-0000	Air horn switch at pump panel. Switch to be labeled "Evacuation Alert". Location: [#LOC].	$134
3136-0001	Backboard storage compartment in pump module. Locate rearward of crosslays on SM and forward of crosslays on TM. Includes vertical hinged diamond plate access door each side.	$987
3136-0002	Microphone box. Locate at the [#LOC].	$472
3136-0003	Microphone box, Cast Products. Locate at/in the [#LOC].	$440
3136-0004	The lower area of the pump compartment to have a four (4) sided heat pan with two (2) removable (side to side) bottoms. Bottoms to be secured in the closed position with mechanical fasteners.	$959
3136-0005	The crosslay divider(s) to be notched both ends for Task Force Nozzle.	$116
3136-0006	Two (2) pump compartment heaters are to be mounted in the pump area. Locate as low as possible.	$1,559
3136-0011	P-Rubber in flex joint(s) between pump module and/or body modules.	$571
3136-0021	Divider in storage pan with adjustable tracks (front to rear).	$177
3136-0023	Microphone Box Cast Products. Locate at/in the [#LOC].	$467
3136-0025	Microphone box. Dimensions for microphone box are 14" wide x 6.5" high x 5.5" deep. Locate at the [#LOC].	$517
3136-0029	Air horn switch at pump panel. Switch to be labeled "Air Horn". Location: [#LOC].	$134
3136-0031	Removable Speedlay Tray(s). The floor of the tray(s) to be slotted to prevent the accumulation of water and allow for ventilation of wet hose.	$574
3136-0033	Crosslay divider(s) to be lowered approx 5" to provide room for bail handled nozzle(s) below cover.	$116
3136-0034	Microphone box 10W X 6H X 11D located on pump operator panel.	$537

3136-0045	Microphone Box Cast Products. Locate at/in the [#LOC].	$467
3136-0047	Backboard storage compartment in pump module. Locate rearward of crosslays on SM and forward of crosslays on TM. Includes vertically hinged smooth plate painted job color access door each side.	$1,212
3136-0051	Air horn switch at pump panel. Switch to be labeled "Code Red". Location: [#LOC].	$134
3136-0056	The crosslay divider(s) to be held 12" short both ends.	$384
3136-0060	Transverse compt over pump panel. Includes lift-up dia plt door on each end with gas shock and D-Ring latch.	$2,191
3136-0061	Heat pan removable bottoms to have screws and nuts in place of butterfly latches.	$260
3136-0062	Crosslay divider(s) to be adjustable front to rear.	$905
3136-0064	Heat pan. The lower area of the pump compartment to have a four (4) sided heat pan with two (2) removable (side to side) bottoms. Bottoms to be secured in the closed position with butterfly latches.	$959
3136-0066	Microphone box. Dimensions for microphone box are 12.5" wide x 8" high x 6" deep. Locate at the [#LOC].	$517
3136-0067	DEF Tank mounting provision in right side of pump compt. Includes tank supports, heat shield and tank fill access either through pump access door or separate door as applicable.	$342
3136-0071	Microphone Box Cast Products. Locate at/in the [#LOC].	$440
3136-0079	Q2B switch at pump panel. Switch to be labeled "Evacuation Alert". Location: [#LOC].	$134
3136-0081	A pump compartment heater with 110V blower to be mounted in the pump area.	$1,215
3136-0085	Cast Products EB0010-1-A microphone box. Locate on driver side pump panel. Hinge door to the right.	$508
3136-0090	Speedlay tray - removable. Tray includes a 1.25" extruded alum handle low on each end of tray and slots down each side to facilitate lifting. The floor of the tray shall have poly slides and be slotted to prevent the accumulation of water and allow for ventilation of wet hose.	$574
3136-0098	Microphone box. Dimensions for microphone box are 12" wide x 12" high x 6" deep. Locate at the [#LOC].	$536
3136-0100	Notched Speedlay divider(s) on the both for connecting preconnect hoses. Notch to be 12"L X 4"H enough room to use a spanner wincher for connecting hoses.	$90
3136-0111	Microphone box. Dimensions for microphone box are 8" wide x 12" high x 6" deep. Locate at the [#LOC].	$517
3136-0114	The running board(s) to be notched for Pistion Intake Valve. Location(s): [#LOC].	$445
3136-0115	The lower area of the pump compartment to have a four (4) sided heat pan with two (2) removable (side to side) bottoms. Lower section of pan designed to provide the maximum amount of ground clearance. Bottoms to be secured in the closed position with butterfly latches.	$959
3136-0116	DEF Tank mounting provision in left side pump compt to the rear of the pump. Includes tank supports and tank fill access door.	$302
3136-0117	P-Rubber in flex joint(s) between pump module and/or body modules. Horizontal across tops and along sides at flex joint(s).	$571
3136-0118	A two (2) piece aluminum pan shall be bolted in place below the pump controls within the pump module. This pan shall utilize .090 aluminum plate to provide a shield to reduce heat loss as the pump controls exit the pump module for the top mount control panel.	$248
3136-0121	Speedlay tray - Polypropylene - removable. Tray includes pull out grab handle (poly dowel) down low on each end to facilitate lifting. The trays shall be made from Polypropylene, the floor of the tray shall be slotted to prevent the accumulation of water and allow for ventilation of wet hose.	$815
3136-0124	Backboard storage compartment located to rear of crosslays. Includes vertically hinged smooth plate painted job color access door each side. Top cover to be smooth plate IPO diamond plate painted black durabak.	$1,262
3136-0125	The officer side pump module upper plate-work shall be smooth plate IPO diamond plate (where E-One logo is mounted).	$113
3136-0126	Microphone box. Dimensions for microphone box are 7.5" wide x 15" high x 11" deep. Locate at the [#LOC].	$517
3136-0130	Speedlay tray - Polypropylene - removable. Tray includes pull out grab handle (poly dowel) down low on each end to facilitate lifting. The tray(s) shall be sized approximately 18" H X 10" W. The tray(s) shall be made from Polypropylene, the floor of the tray shall be slotted to prevent the accumulation of water and allow for ventilation of wet hose.	$815
3136-0134	Replace pump module handrails (left and right) with 18" handrails IPOS.	$356
3136-0136	Removable speedlay tray(s). The floor of the tray(s) shall be sloped from a raised position in the middle slanted downward towards each end. Additionally the floors shall be slotted to prevent the accumulation of water and allow for ventilation of wet hose. There shall be slotted hand holds on each side of the tray (IPO grab handles on each end).	$701
3136-0151	Microphone box. Dimensions for microphone box are 12" wide x 12" high x 6" deep. Locate at the driver side pump panel. With hold open device.	$632
3136-0152	Air horn switch at pump panel. Switch to be labeled "Evacuation Alert" with a 4" x 2.5" orange backing plate.	$182
3136-0158	Upper and/or lower speedlay tray 8.5" interior width. - removable. Tray includes a 1.25" extruded alum handle low on each end of tray and slots down each side to facilitate lifting. The floor of the tray shall have poly slides and be slotted to prevent the accumulation of water and allow for ventilation of wet hose.	$574
3136-0162	Hi Rise tray - removable. Tray includes a 1.25" extruded alum handle low on each end of tray and slots down each side to facilitate lifting. The floor of the tray shall have poly slides and be slotted to prevent the accumulation of water and allow for ventilation of wet hose.	$574
3136-0165	Microphone box. Dimensions for microphone box are 14" wide x 6" high x 6" deep. Locate at the pump operator panel.	$517

3136-0166	Removable Speedlay Tray(s). The floor of the tray(s) to be slotted to prevent the accumulation of water and allow for ventilation of wet hose. The side walls of tray(s) to be approx same height with slots down each side to facilitate lifting. This tray should be used with Taller Speedlay opening.	$574
3136-0181	Speedlay tray - removable - extra length for full width module. Tray to be 14W x 9H x Full width of module. Tray includes a 1.25" extruded alum handle on each end of tray and slots down each side to facilitate lifting. The floor of the tray shall have poly slides and be slotted to prevent the accumulation of water and allow for ventilation of wet hose.	$661
3136-0183	Backboard/pike pole storage compartment located to rear of crosslays. Includes partition between backboard and pike poles and vertically hinged diamond plate access door each side. Note pike poles will only be accessible from driver side and longest pike pole that compartment will accommodate is 6'.	$1,135
3200-0054	Heater rear walk-in area. Locate under bench seat in the body interior.	$1,562
3300-0007	Door single vertical hinged painted. Location(s): [#LOC]	$709
3300-0008	Door double vertical hinged painted. Location(s): [#LOC].	$788
3300-0009	Door single vertical hinged diamond plate. Location(s): [#LOC]	$496
3300-0010	Door double vertical hinged diamond plate. Location(s): [#LOC].	$709
3300-0011	Door single horizontal hinged lift-up box pan configuration painted. Location(s): [#LOC]	$688
3300-0012	Door single horizontal hinged lift-up box pan configuration diamond plate. Location(s): [#LOC]	$534
3300-0013	Door roll up short (up to 45") with satin finish POK. Location(s): [#LOC]	$713
3300-0014	Door roll up tall (greater than 45") with satin finish POK. Location(s): [#LOC]	$1,021
3300-0015	Door roll up short (up to 45") with painted finish POK. Location(s): [#LOC]	$1,142
3300-0016	Door roll up tall (greater than 45") with painted finish POK. Location(s): [#LOC]	$1,446
3300-0017	Door roll up short (up to 45") with satin finish ROM. Location(s): [#LOC].	$794
3300-0019	Door roll up tall (greater than 45") with satin finish ROM. Location(s): [#LOC].	$1,133
3300-0021	Door roll up short (up to 45") with painted finish ROM. Location(s): [#LOC].	$1,346
3300-0022	Door roll up tall (greater than 45") with painted finish ROM. Location(s): [#LOC].	$1,684
3300-0025	Door single horizontal hinged drop down painted. Location(s): [#LOC]. Door(s) will have chain hold open devices.	$568
3300-0030	Door double 3-point vertical hinged painted. Location(s): [#LOC]	$1,571
3300-0062	Keyed compartment door latch with #1250 key. Location(s): [#LOC].	$75
3300-0063	Keyed roll-up compartment door with #1250 key. Location(s): [#LOC].	$133
3300-0064	All apparatus doors, body and chassis, are to be keyed alike. Not avail on Commercial Chassis. Requires keyed latch option to be included in shop order.	$293
3300-0065	Electric lock for an ROM roll-up door (EA). The door to lock on both sides of compartment as applicable. Includes manual J236 key lock. Location(s): [#LOC]	$583
3300-0066	Drip pan for a ROM roll-up door (EA). Location(s): [#LOC].	$160
3300-0078	Cleveland door springs provided for all vertical hinged body doors.	$145
3300-0096	Keyed roll-up compartment door with #J236 key. Location(s): [#LOC]	$133
3300-0097	Keyed compartment door latch with #J236 key. Location(s): [#LOC]	$75
3300-0099	Intergrated sill plate. Water Dam type door sill for ROM rollup door. Location(s):[#LOC]	$137
3300-0103	Door double vertical hinged smooth plate sanded. Location(s): [#LOC].	$788
3300-0105	Door roll up tall (greater than 45") with satin finish Amdor. Location(s): [#LOC].	$1,480
3300-0106	Door roll up short (up to 45") with satin finish Amdor. Location(s): [#LOC].	$1,059
3300-0107	Pull down straps for lift-up door. Loc: [#LOC].	$99
3300-0120	Electric lock for a ROM roll-up door (EA). The door to lock on both sides of compartment as applicable. Includes manual 1250 key lock. Location(s): [#LOC]	$583
3300-0121	Door bi-fold horizontal hinged painted. Location(s): [#LOC]	$872
3300-0131	Door bi-fold horizontal hinged painted. Location(s): [#LOC]. Includes upper door mounted guide roller assembly and the lower door will have chains for side or upper rear body mount or bumper style for lower rear body mounted.	$977
3300-0133	Door single horizontal hinged drop-down sanded smooth plate. Location(s): [#LOC].	$451
3300-0135	Door double 3-point vertical hinged smooth plate sanded. Location(s): [#LOC].	$1,571
3300-0138	Keyed compartment door latch with #CH751 key. Location(s): [#LOC]	$75
3300-0139	Door double 3-point horizontal hinged painted. Location(s): [#LOC]. Lower door should act as an exterior writing surface, w/ adjustable angles. The paddle latch on the second door shall not protrude past the edge of the door.	$1,571
3300-0140	Door single horizontal hinged drop down diamond plate. Location(s): [#LOC].	$428
3300-0144	Stainless steel door horizontal hinged lift-up painted. Location(s): [#LOC].	$688
3300-0151	Drip pan with drain for a ROM roll-up door (EA). Location(s): [#LOC].	$206
3300-0164	Door double vertical hinged w/rotary latches - painted . Location(s): [#LOC]	$788
3300-0165	Door double vertical hinged w/rotary latches - smooth plate sanded. Location(s): [#LOC].	$788
3300-0166	Door double vertical hinged w/rotary latches - diamond plate. Location(s): [#LOC]	$709
3300-0167	Door double 3-point vertical hinged w/rotary latches - painted. Location(s): [#LOC]	$1,571
3300-0169	Door double 3-point vertical hinged w/rotary latches - smooth plate sanded. Location(s): [#LOC]	$1,571
3300-0174	Keyed roll-up compartment door with #CH751 key. Location(s): [#LOC].	$133
3300-0177	Door single horizontal hinged drop down painted. Door will have 2 D-ring handles. Location(s): [#LOC].	$734
3300-0186	Doors B1/B2 at rear of body to be diamond plate IPO standard. Without pump aerial body only.	$118
3300-0189	Tri-Mark latches IPO quater turn latches. Includes compartments: B1, B2 & ladder tunnel doors.	$302
3300-0192	Polished stainless steel overlay on all double pan door's inner pan on body. 95 mid-mount aerial only. Overlay will be full height and should go around latch, gas shock castings and lock cover.	$1,898
3300-0195	Door roll up tall (greater than 45") with painted finish Amdor. Location(s):[#LOC].	$2,007
3300-0196	Door double vertical hinged painted, includes (2) gas shock-style hold-open device IPOS. Location(s): [#LOC].	$849

3300-0197	Door roll up short (up to 45") with painted finish Amdor. Location(s): [#LOC].	$1,782
3300-0202	Door single horizontal hinged drop-down sanded smooth plate. Location(s): [#LOC].	$451
3300-0206	Additional roll up door stop latches shall be mounted for B1 at a raised location aligned with the bottom of the ladder tunnel. The raised latches/hooks shall not be included as part the door ajar circuit.	$69
3300-0211	Door to be notched for 3" DJ hose. Notch to be 5" W x 1" H. Location: top of B2 officer side door. This door is to be the "first opened" door as shown on drawing.	$283
3300-0215	Additional roll up door stop latches (PR) shall be mounted at a raised location aligned with the reduced depth transition area. The raised latches/hooks shall not be included as part the door ajar circuit. Location(s): [#LOC].	$69
3300-0219	Install dealer supplied roll up doors. The roll up doors for location(s): [#LOC]. shall be dealer supplied. These door kit(s) as supplied will be complete and correct for compartment(s) specified. E-ONE manufacturing shall install these dealer supplied ROM roll up door(s).	$221
3300-0220	Reverse hinge single compartment door. Includes vertical mounted drip rail along forward area of compartment opening (in addition to the horizontal drip rail above the door opening). Location(s): [#LOC].	$147
3300-0222	Double door to have latch handle extension installed on secondary door's interior latch with "PULL" tags. Location(s): [#LOC]	$57
3300-0223	Tri-Mark latches IPO quater turn latches. Location(s): ladder tunnel door(s).	$152
3300-0228	Door double 3-point vertical hinged w/rotary latches - painted. Location: [#LOC]. D-ring primary door located rearward ipo standard. Door double 3-point vertical hinged w/rotary latches - painted.	$1,571
3300-0234	Door single vertical hinged painted EOD USAF. Location(s): [#LOC]	$709
3300-0235	Door single horizontal hinged drop down painted. EOD USAF. Location(s): [#LOC]. Door(s) will have chain hold open devices.	$568
3300-0236	Door double vertical hinged - painted. EOD USAF. Location(s): [#LOC]	$788
3300-0238	Door single horizontal hinged lift-up box pan configuration painted. EOD USAF. Location(s): [#LOC]	$688
3300-0239	Door single vertical hinged painted with the hinge reversed so the door open opposite of standard. Location(s): [#LOC]	$709
3300-0242	Compartment door L2/R2 & L6/R6 D-ring latch lowered to align with following door's D-ring latch.	$380
3300-0248	There shall be single piece compartment door drip rail provided over L1/L2, L5/L6, R1/R2 & R4/R5. Only available with (2) consecutive compartments with like doors.	$190
3305-0000	Diamond plate generator cover.	$955
3305-0001	Cover aluminum (2) piece with recessed handles, SideStacker. Note: This option effects hose bed capacity.	$1,797
3305-0002	Bi-Fold diamond plate cover for the crosslay area. Includes applicable grab handles and (2) hold downs. Non-aerial applications to be tagged as a non-stepping surface.	$837
3305-0003	Single diamond plate cover for the crosslay area. Includes applicable grab handle(s) and (2) hold downs. Non-aerial applications to be tagged as a non-stepping surface.	$566
3305-0006	All hand rails (as applicable) are to have a rubber insert. Includes cab (N/A on commercial chassis), pump module and body.	$1,691
3305-0007	Vinyl [#COL] hose bed cover with attached rear flap(s).	$816
3305-0008	Vinyl [#COL] crosslay cover with attached side flaps.	$286
3305-0009	Compartment underbody with slide-out tray.(**Obsolete** See Sales code 3380-0078) Includes drop down front door with push button latch(es). [#LOC]	$1,816
3305-0010	Compartment underbody. Includes drop down front door with push-button latches. Locate [#LOC].	$1,180
3305-0016	Vinyl [#COL] speedlay side covers.	$191
3305-0017	Nylon black strap on running board suction tray (EA). Location: [#LOC].	$75
3305-0021	Vinyl [#COL] hose bed cover with side bungee cords and attached rear flap(s).	$1,135
3305-0022	Vinyl rear cover for diamond plate hose bed cover. Color: [#COL].	$253
3305-0023	Nylon black cargo net at rear of diamond plate or vinyl hose bed cover or similar.	$531
3305-0024	Vinyl [#COL] side covers for diamond plate crosslay cover.	$179
3305-0025	Nylon black cargo net on sides for crosslay cover.	$212
3305-0027	Nylon black cargo net on sides of speedlay.	$246
3305-0028	Vinyl [#COL] cover for running board suction tray. Location: [#LOC].	$179
3305-0029	Nylon black strap on running board suction tray (EA). For use with rolled hose. Location: [#LOC]	$86
3305-0033	Vinyl access cover for fill tower(s).	$188
3305-0034	Vinyl [#COL] hose bed cover without attached rear flap(s). Requires rear cover option.	$691
3305-0038	Vinyl [#COL] crosslay cover top only.	$244
3305-0040	Nylon black strap with clip release on running board suction tray (EA). Location: [#LOC]	$134
3305-0052	Vinyl [#COL] hose bed cover with side snaps and bungee cord attached rear flap(s).	$1,135
3305-0060	Diamond plate cover for running board suction tray(s). Includes push-button latches and gator grip. Location(s): [#LOC].	$355
3305-0062	Cover aluminum (1) piece with recessed handles, SideStacker. Note: This option effects hose bed capacity.	$1,254
3305-0063	Diamond plate cover(s) to protect cascade system valves and fittings located in the upper open storage area.	$545
3305-0064	Nylon black strap with aluminum quick-release buckle for hose tray. Strap to attach to side walls of tray down low as applicable. Location: [#LOC].	$110
3305-0066	Vinyl cover for front headboard opening. Cover to be black with twist locks in the corners and snaps on the sides.	$244
3305-0067	Vinyl cover for open storage area. Color: [#COL]	$691

3305-0068	Vinyl [#COL] hosebed cover with attached rear flap(s). Cover to have snaps and velcro along front (no awning attachment) and sides. No twist locks. The rear bungees to be tie-in versus sown (use ilets sized to secure a looped and tied bungee). Bungee to be easily removed and replaced (by fire department) in field.	$1,381
3305-0070	Diamond plate portable pump cover.	$1,163
3305-0080	Diamond plate cover for running board suction tray(s). Includes push-button latches and gator grip. Includes cords to prevent covers from dropping to the ground when removed. Location(s): [#LOC].	$392
3305-0094	Fire Retardent Vinyl [#COL] crosslay cover with attached side flaps.	$570
3305-0124	Vinyl [#COL] crosslay cover with attached side flaps. Cover to have velcro on the top IPO snaps.	$286
3305-0128	Vinyl rear cover for diamond plate hosebed cover. Cover to be attached with snaps. Color: [#COL].	$356
3305-0129	Nylon black strap with aluminum quick release buckle (EA) for hose bed hose retention at rear. If hose bed divider is supplied there shall be a set on either side of divider to maintain tension on hose without interference of divider (if applicable).	$317
3305-0130	Vinyl [#COL] crosslay cover with attached side flaps. Cover to have snaps and velcro on the top. No twist locks. The side bungees to be tie-in versus sown (use ilets sized to secure a looped and tied bungee). Bungee to be easily removed and replaced (by fire department) in field.	$485
3305-0142	Vinyl red side covers for diamond plate crosslay cover. Covers to attach to the DP cover with snaps. The lower corners to have bungee cords. Cords are to be tie-in versus sown. Flaps to have eyelets sized to secure individual looped and tied bungees. Cords to be easily removed and replaced (by fire department) in field.	$293
3305-0143	Vinyl rear cover for diamond plate hosebed cover. Cover to attach to the DP cover with snaps. The lower edge to have bungee cords. Cords are to be tie-in versus sown. Flap to have eyelets sized to secure individual looped and tied bungees. Cords to be easily removed and replaced (by fire department) in field. Color: Red	$371
3305-0147	Nylon yellow strap with aluminum quick-release buckle for hose tray. Strap to attach to side walls of tray down low as applicable. Location: [#LOC].	$110
3305-0149	Nylon yellow cargo net on sides for crosslay cover. Cover to have snaps in place of bungees.	$298
3305-0150	Nylon yellow cargo net at rear of diamond plate or vinyl hosebed cover. Cover to have snaps in place of bungees.	$568
3305-0166	Nylon black strap with aluminum quick-release buckle for hose tray. Strap to attach to side walls of tray down low as applicable. For use with rolled hose. Location: [#LOC].	$120
3305-0168	Vinyl [#COL] hose bed cover with side bungee cords without attached rear flap(s). Requires rear cover option.	$1,011
3305-0174	Single diamond plate cover for the crosslay area. Includes applicable grab handle(s) and (2) hold downs. Cover to be embossed diamond plate.	$623
3305-0175	Vinyl fire retardent [#COL] hose bed cover with attached rear flap(s).	$1,019
3305-0176	Vinyl fire retardent [#COL] side covers for diamond plate crosslay cover.	$224
3305-0177	Vinyl fire retardent [#COL] cover for running board suction tray. Location: [#LOC].	$224
3305-0180	Vinyl [#COL] hose bed cover with side bungee cords and attached rear flap(s). Includes large pull tabs to ease securing cover while wearing gloves.	$1,239
3305-0183	Vinyl [#COL] crosslay cover with attached side flaps with bungee cord.	$357
3305-0184	Vinyl [#COL] side covers for diamond plate crosslay cover. Includes large pull tabs to ease securing end flaps while wearing gloves.	$179
3305-0186	Nylon red cargo net on sides for crosslay cover.	$236
3305-0187	Nylon red cargo net at rear of diamond plate or vinyl hose bed cover.	$562
3305-0188	Nylon black strap with footman loops and Velcro closure to secure hose. Location: [#LOC].	$86
3305-0189	The rear flap(s) of the hosebed cover shall be upgraded to add weight to the bottom of the rear vertical flap(s).	$507
3305-0191	Vinyl rear cover for diamond plate hose bed cover using California Type 3 straps IPOS. Color: [#COL].	$386
3305-0192	Vinyl rear cover for hose chute(s). Color: [#COL]. Includes large pull tabs to ease securing cover while wearing gloves.	$253
3305-0193	Hold open device(s) shall be provided. Rubber plunger type hold downs(s) shall hold the aluminum crosslay cover(s) (single or bi-fold) in the open position.	$197
3305-0194	Bi-Fold diamond plate cover for the crosslay area. Includes applicable grab handles, (2) hold downs and magnetic door ajar switch(s). Non-aerial applications to be tagged as a non-stepping surface.	$951
3305-0200	Vinyl [#COL] end covers for upper outboard hose storage of the hosebed.	$179
3305-0201	Bi-Fold 1/8" smooth plate cover for the crosslay area. Includes applicable grab handles and (2) hold downs. The cover to be painted black durabak. Non-aerial applications to be tagged as a non-stepping surface.	$1,003
3305-0203	Nylon black strap with aluminum quick-release buckle for tailboard hose tray(s). Strap to attach to side walls of tray down low as applicable.	$110
3305-0205	Vinyl [#COL] side covers for diamond plate crosslay cover. Covers to attach to the DP cover with snaps. The lower corners shall be secured in place using California type straps (2) each side IPOS. These straps shall function to allow each strap to be looped around the horizontal crosslay roller on each side as part of the attach system.	$363
3305-0206	Vinyl [#COL] hose bed cover using Nitrogen/Oxygen type straps (2) attach positions each side (4) total to secure the rear flap(s) IPOS. The upper straps shall be sewn in place leaving the ratchet clamp approximately half way or mid height of the rear flap(s). The bottom straps shall be fastened to a strap tie down mounted slightly above the horizontal handrail in line with the sewn in straps above (4) total top and (4) total bottom. The bottom straps shall feed directly above to the ratchet clamps (sewn in) as part of the attach/securing system.	$1,548

3305-0207	Vinyl [#COL] hose bed cover with side bungee cords for main hose bed storage area. Seperate cover w/snaps and attached rear flap for hose chute(s). Aerial application only.	$1,135
3305-0208	Cargo net for inside compartment for containing cribbing in compartment when door is opened. Net to permanently fasten on rearward wall just inside door opening and fasten with buckle straps on forward wall just inside door opening. Cargo netting will be 3" x 3" squares. Location: [#LOC].	$780
3305-0212	Vinyl fire retardent [#COL] hosebed cover with twist locks fasteners and bungee cord attached rear flap(s). Cover to be partial hosebed cover leaving hosebed walkway area uncovered. To extend full length of the hosebed from roof top compartment on the side to divider against walkway in the middle and to hosebed storage pan rearward mounting flange at the front.	$1,316
3305-0214	Nylon black cargo net at rear of diamond plate or vinyl hose bed cover. Notched for hosebed storage compartment(s) and door(s) as required.	$531
3305-0215	Vinyl [#COL] hose bed cover with attached rear flap(s). Cover to have snaps and velcro along front (NO awning attachment) and velcro along sides. No twist locks.	$816
3305-0217	Vinyl [#COL] hosebed cover with attached rear flap(s). Cover to have bungees on sides ipo velcro. Bungee to be easily removed and replaced (by fire department) in field.	$1,381
3305-0222	Vinyl rear cover for diamond plate hosebed cover. Cover to be attached with bungee cords at all attachment positions. Color: [#COL].	$360
3305-0223	Nylon black cargo net on sides of speedlay. Cover to be attached with bungee cords at all attachment positions.	$309
3305-0227	Vinyl fire retardant rear cover for diamond plate hose bed cover. Color: [#COL].	$278
3305-0228	Fire Retardent Vinyl [#COL] side covers for diamond plate crosslay cover.	$358
3305-0235	Booster Reel Cover. Cover to be .125" diamond plate and shall include hinged lid for top access with 1.5" lip all around, gas shock hold open and (2) butterfly latches, one on each end. A slot shall also be provided with 1.5" diameter stainless steel rollers for hose to fed through. Location: [#LOC]..	$829
3305-0237	E-One fabricated enclosure shall be provided for the Haskel Booster Pump. Cover to be .125" diamond plate and shall include hinged lid for top access with 1.5" lip all around and (2) butterfly latches, one on each end. Location: L4 compartment top offset forward.	$829
3305-0238	Vinyl [#COL] hose bed covers with attached rear flaps. Two Seperate covers for bi-level hose bed sides stepped to clear overhead rack assembly.	$979
3305-0241	Bi-fold style diamond plate cover for running board suction tray(s) hinged outboard from pump panels. Includes butterfly latches and gator grip. Location(s): [#LOC].	$392
3305-0243	Vinyl [#COL] crosslay cover with attached side flaps. Includes side snaps.	$356
3305-0246	Smooth plate aluminum rear covers for the application of applicable chevrons mounted on the ends of the top outboard hose bed storage areas. Includes vertical hinge each side and a non-locking D-ring latch. Doors to be wired to door ajar circuit. Storage areas to be open to the top and shall be used for misc. equipment to be added/secured as applicable to NFPA by customer/dealer. Not identified to be used as loose hose storage.	$760
3305-0247	Diamond plate vertically hinged door each side of the 2.5" crosslay hinge rearward. Includes thumb latch and wiring for door ajar switch.	$352
3305-0259	Nylon black cargo net at rear of diamond plate or vinyl hose bed cover w/(2) aluminum quick release buckles.	$745
3305-0260	Nylon black cargo net end flaps w/(2) aluminum quick release buckles on each side for crosslay cover.	$530
3305-0262	Cover aluminum (3) piece with recessed handles, Applies only to 95 Mld-Mount SideStacker. Note: This option effects hose bed capacity.	$2,690
3305-0263	Removable diamond plate cover for the crosslay area. Includes applicable grab handles and aluminum fabricated brackets with safety pins for hold downs. Aerial applications to be tagged as a non-stepping surface.	$837
3305-0264	Diamond plate cover for running board suction tray(s). Includes butterfly latches and gator grip. Includes cords to prevent covers from dropping to the ground when removed. Location(s): [#LOC].	$392
3305-0265	Vinyl rear cover for diamond plate hose bed cover. The top of the cover shall be mechanically attached to the rear hose bed cover extrusion with over lapping flaps in the center secured with velcro. The lower portion of the cover shall be secured in place with heavy duty nylon straps. The lower portion fasteners shall be mounted at pick up. Color: Red.	$371
3305-0269	Vinyl rear cover for hose chute(s). Color: [#COL].	$191
3305-0274	Vinyl black hose bed cover with attached rear flap, on one side only, to the top of the hose bed storage compartment.	$816
3305-0276	Vinyl red crosslay cover top with attached nylon red cargo net on each side of cover.	$547
3305-0277	Vinyl rear cover for diamond plate hose bed cover. Cover shall attach to hard cover optioned and have weighted bottom edge with additional shock cord attaching cords to comply with NFPA current version. Cover shall be split in the center along hard cover center or divider at center of hose bed. D&S custom covers brand NFPA compliant with reflective yellow and red "A" chevrons.	$817
3305-0280	Nylon black strap with aluminum quick-release buckle for hose tray. Location: to be mounted at final inspection. [#LOC].	$110
3305-0282	Vinyl black hose bed cover with nylon black strap with footman loops and Velcro closure to secure hosebed cover without attached rear flap(s). Requires rear cover option.	$1,011
3305-0283	Nylon black cargo net at rear of diamond plate or vinyl hosebed cover. Cover to have nylon black strap with footman loops and Velcro closure to secure hosebed end flap.	$568
3305-0288	Booster Reel Cover. Cover to be .125" aluminum and shall include hinged lid for top access with 1.5" lip all around, gas shock hold open and (2) butterfly latches, one on each end. A slot shall also be provided with 1.5" diameter stainless steel rollers for hose to fed through. Finish to be painted job color. Location: [#LOC].	$829
3305-0294	Vinyl red cover for fire extinguisher box. Cover to attach to the shelf lip with snaps. The lower corners to have bungee cords.	$293

3310-0000	Compartments driver side tandem axle HP SideStacker. Includes rescue style compartments.	$37,742
3310-0001	Compartments driver side tandem axle HP SideStacker. Includes rescue style extended height compartments.	$40,165
3310-0002	Compartments driver side CR100/95 platform SideStacker with 300g tank. Includes rescue style compartments.	$36,881
3310-0003	Compartments driver side CR100/CR137/95 platform SideStacker with 300g tank. Includes rescue style extended height compartments.	$39,568
3310-0004	Compartments officer side tandem axle HP SideStacker. Includes low side compartments with full length extended hosebed. Decreases height of compartments R1 and R2.	$23,124
3310-0005	Compartments officer side tandem axle HP SideStacker. Includes low side compartments with full length hosebed. Decreases height of compartments R1 and R2.	$21,778
3310-0006	Compartments officer side tandem axle HP SideStacker. Includes rescue style compartments ahead of wheel well, with extended hosebed.	$27,119
3310-0007	Compartments officer side tandem axle HP SideStacker. Includes rescue style compartments ahead of wheel well with standard hosebed.	$25,772
3310-0008	Compartments officer side tandem axle HP SideStacker. Includes rescue style extended height compartments ahead of wheel well with extended hosebed.	$29,171
3310-0009	Compartments officer side tandem axle HP SideStacker. Includes rescue style extended height compartments ahead of wheel well with standard hosebed.	$30,539
3310-0010	Compartments officer side CR100/95 platform SideStacker with 300g tank. Includes low side compartments with full length extended hosebed. Decreases height of compartments R1 and R2.	$22,812
3310-0011	Compartments officer side CR100/95 platform SideStacker with 300g tank. Includes low side compartments with full length hosebed. Decreases height of compartments R1 and R2.	$21,632
3310-0012	Compartments officer side CR100/95 platform SideStacker with 300g tank. Includes rescue style compartments ahead of wheel well, with extended hosebed.	$26,096
3310-0013	Compartments officer side CR100/95 platform SideStacker with 300g tank. Includes rescue style compartments ahead of wheel wells with standard hosebed.	$24,911
3310-0014	Compartments officer side CR100/CR137/95 platform SideStacker with 300g tank. Includes rescue style extended height compartments ahead of wheel well with extended hosebed.	$28,272
3310-0015	Compartments officer side CR100/95 platform SideStacker with 300g tank. Includes rescue style extended height compartments ahead of wheel well with standard hosebed.	$27,090
3310-0017	Auxiliary jack pad 24X24 (PR) with side mounted handle. Includes mounting brackets.	$1,106
3310-0018	Auxiliary jack pads 24X24 (4). Includes pads with side mounted handle and mounting brackets to store (2) each side of the body next to front drop down jacks.	$1,579
3310-0020	Step fold-down rear (EA).	$881
3310-0021	Step flop down rear 24" wide rung type (EA).	$542
3310-0022	Step flop down rear 12" wide rung type (PR).	$915
3310-0023	Step pocket flop down rear (PR).	$1,101
3310-0024	Tailboard 12" bolt on-G067. Includes handrail below hosebed and (1) underbody ground light on the officer's side.	$683
3310-0026	Contoured beavertail compartments. Door opening raised for warning light.	$3,539
3310-0029	Auxiliary jack pad 26X26 (4) with side mounted handle. Includes (2) double mounting brackets.	$1,893
3310-0032	Recessed tubes for (6) pike poles. Not available on HP75 SideStacker.	$609
3310-0033	Pike pole/ladder storage. Available on HP75 SideStacker only. The access door to match the rear body finish.	$609
3310-0036	Rollup rear ladder compartment door with satin finish for SideStacker aerial. Includes hinged ladder retention plate.	$1,717
3310-0037	Rear ladder tunnel doors. Vertically hinged diamond plate.	$658
3310-0038	Rear ladder tunnel door. Diamond plate lift up door to open 20 degrees past horizontal.	$698
3310-0040	Notch compartment R2 in deep area above jack leg to allow for routing of hydraulic generator hoses.	$308
3310-0041	Compartments driver side CR100/95 platform SideStacker with 500g tank. Includes rescue style compartments.	$36,881
3310-0042	Compartments driver side CR100/95 platform SideStacker with 500g tank. Includes rescue style extended height compartments.	$39,568
3310-0043	Compartments officer side CR100/95 platform SideStacker with 500g tank. Includes low side compartments with full length extended hosebed. Decreases height of compartments R1 and R2.	$22,812
3310-0044	Compartments officer side CR100/95 platform SideStacker with 500g tank. Includes low side compartments with full length hosebed. Decreases height of compartments R1 and R2.	$21,632
3310-0045	Compartments officer side CR100/95 platform SideStacker with 500g tank. Includes rescue style compartments ahead of wheel well, with extended hosebed.	$26,096
3310-0046	Compartments officer side CR100/95 platform SideStacker with 500g tank. Includes rescue style compartments ahead of wheel wells with standard hosebed.	$24,911
3310-0047	Compartments officer side CR100/95 platform SideStacker with 500g tank. Includes rescue style extended height compartments ahead of wheel well with extended hosebed.	$28,272
3310-0048	Compartments officer side CR100/95 platform SideStacker with 500g tank. Includes rescue style extended height compartments ahead of wheel well with standard hosebed.	$27,090
3310-0049	Auxiliary jack pad 24X24 (4) with side mounted handles. Includes welded mounting brackets.	$2,210
3310-0050	Crosslay triple 5.5" wide single stack to hold up to 200' of 2.0" DJ (each) or 150'-200' 2.5" DJ (each). Includes storage pan to rear of crosslays	$3,451
3310-0051	Crosslay double to hold up to 200' of 2.0" DJ (each). Includes storage pan to rear of crosslays.	$2,544
3310-0052	Crosslay double 5.5" wide single stack to hold up to 200' of 2.0" DJ (each) or 150'-200' 2.5" DJ (each). Includes storage pan to rear of crosslays.	$2,544
3310-0053	Crosslay double to hold up to 400' of 2.0" DJ (each). Includes storage pan to rear of crosslays.	$2,982

3310-0054	Crosslay triple to hold up to 200' of 2.0" DJ (each). Includes storage pan to rear of crosslays.	$3,451
3310-0055	Crosslay double w/dry lay. Includes (2) 5.5" wide single stack crosslays to hold up to 200' of 2.0" DJ or 150'-200' 2.5" DJ (each) and (1) 11" wide dry lay for up to 300' of 3.0" DJ. Includes storage pan to rear of crosslays.	$3,451
3310-0056	Crosslay Double (1) Single (1) Double Stacked Midmount. Forward lay 5.5"W x 18"D to hold up to 200' of 2" DJ. Rearward lay 11.25"W x 18"D to hold up to 600' of 1.75" or 350' of 2.5" DJ. Midmount only.	$2,559
3310-0057	Crosslay double to hold up to 400' of 2.0" DJ (each).	$2,559
3310-0058	Crosslay triple 5.5" wide single stack to hold up to (2) 200' of 2.0" DJ (each) and up to 200' 2.5" DJ.	$2,731
3310-0059	Storage box at rear of body for handheld jack control 12W x 13H x 8D. Locate below extended top step. Material to be the same as rear body surface.	$324
3310-0060	Boxed out rear ladder tunnel doors. Vertically hinged diamond plate.	$1,035
3310-0061	Crosslay triple (2) 4.25" wide single stack to hold up to 200' of 2.0" DJ (each) and (1) 5.5" wide to hold up to 150'-200' 2.5" DJ. Includes storage pan to rear of crosslays	$3,451
3310-0062	Rectangular beavertail compartments with double pan door opening to outside. Door opening raised for warning light.	$3,542
3310-0066	Cover plate over hydraulic generator lines located towards front of compartment below generator.	$238
3310-0068	Rollup rear ladder compartment door for SideStacker aerial painted job color. Includes hinged ladder retention plate.	$2,268
3310-0069	Rear ladder tunnel doors. Vertically hinged smooth plate to match rear body finish.	$830
3310-0070	Rear ladder tunnel door. Smooth plate lift-up door to open 20 degrees past horizontal. Door will match rear body finish.	$870
3310-0071	Boxed out rear ladder tunnel doors. Vertically hinged smooth plate. Doors to match rear body finish.	$1,266
3310-0072	Compartments driver side HP100 Platform SideStacker with 300g tank. Includes rescue style extended height compartments. The door on small compts next to rear outrigger to match wheelwell.	$39,568
3310-0073	Compartments officer side HP100 Platform SideStacker with 300g tank. Includes rescue style extended height compartments ahead of wheel well with extended hosebed.	$28,272
3310-0074	Compartments officer side HP100 Platform SideStacker with 300g tank. Includes rescue style extended height compartments ahead of wheel well, compartment over forward tandem and extended hosebed.	$29,421
3310-0075	Upper dunnage area extension 34 x 58 diamond plate.	$523
3310-0076	Body wheelwell compartments (4) approx 24" W x 6" H x maximum depth permissible without interference with hydraulic line(s) reservoir(s) etc. A gasketed drop down door shall be installed on each compartment. Door material to match wheelwell finish.	$1,335
3310-0079	Stainless steel trim on bottom edge of rear ladder tunnels, turntable access and pike pole compartment openings.	$469
3310-0080	Crosslay triple (2) 5.5" wide single stack to hold up to 200' of 2.0" DJ (each) and (1) 10.5" wide to hold up to 300'-400' of 2.5" DJ. Includes storage pan to rear of crosslays	$3,451
3310-0081	Jack leg opening cover diamond plate (4). Includes diamond plate outrigger cover and diamond plate filler panel.	$790
3310-0082	Wall at rear of upper open storage area bolt-in 3/16 Dia Plt. with diamonds facing rear.	$357
3310-0083	Rear double beavertail handrails (outer handrail only) to be extended up and wrap up over top of body approx 10".	$198
3310-0084	All tags on body to be mechanically attached with S/S screws and nuts.	$764
3310-0085	Compartment at right rear of body for storage of tethered horn control. Locate above pike pole compartment.	$352
3310-0087	Boxed out rear ladder tunnel doors. Vertically hinged diamond plate with lowered D-rings and gas shocks. Includes recess above doors for directional light.	$1,574
3310-0089	Compartments officer side CR100/95 platform SideStacker with 300g tank. Includes rescue style extended height compartments ahead of wheel well with extended hosebed and optional R3 compartment above forward tandem.	$29,421
3310-0095	Rear ladder tunnel doors. Vertically hinged diamond plate with slam latch style d-ring assemblies.	$727
3310-0096	Doors for rear master and jack control controls. Doors will match rear body finish.	$379
3310-0099	Jack leg covers painted job color. Includes (2) painted extension covers and (2) painted fixed covers.	$1,580
3310-0100	Enclosed pump panels. Upper door opening stepped up to allow crosslays to be accessed from inside compartment. Includes hinged diamond plate crosslay cover.	$7,987
3310-0101	Smooth plate fixed panels rear of tandem axle painted job color.	$178
3310-0102	Recessed storage for (6) pike poles. Includes box at upper left rear of body for (2) D-handled 6' poles, (1) recessed tube on the left side below 6' poles for a 12' pole, and (3) recessed tubes below right side hose chute for (2) 10' poles and (1) 12' pole. For use with center HB 4-jack aerial body with sgl chute.	$1,464
3310-0103	Crosslay single w/dry lay. Includes (1) dbl stack for 200' of 2.0" DJ in forward lay and (1) 20" wide dry lay for up to 400' of 2.5" DJ. Includes storage pan to rear of crosslays.	$3,451
3310-0104	Crosslay double, forward lay 7.5" w x 18" d to hold up to 400' of 2" DJ. Rearward lay 9.25" w x 18" d to hold 350' of 2.5" DJ. Midmount only.	$2,559
3310-0105	Crosslay double w/dry lay. Includes (2) 4.25" wide single stack crosslays to hold up to 200' of 2.0" DJ (each) and (1) 5.5" wide dry lay for up to 200' of 2.5" DJ. Includes storage pan to rear of crosslays.	$3,451
3310-0106	Rear ladder tunnel doors. Horizontally hinged drop down diamond plate.	$658
3310-0107	Transverse compartment floor to be extended out to door opening in L1/R1.	$792
3310-0108	Pan shallow for generator. Locate at front of open storage area.	$601
3310-0109	Auxiliary jack pad 24X24 (4) with side mounted handles. Includes mounting brackets that are bolted to body.	$2,596
3310-0110	Boxed out rear ladder tunnel doors. Horizontally hinged diamond plate (drop down).	$1,035

3310-0111	Recessed tubes for (4) pike poles. Not available on HP75 SideStacker.	$488
3310-0113	Upper body side panels to be smooth plate painted job color IPO D.P.	$714
3310-0114	Crosslay triple (2) 5.5" wide single stack to hold up to 200' of 2.0" DJ or 150'-200' 2.5" DJ (each) and (1) 11" wide double stack for up to 300' of 3.0" DJ. Includes storage pan to rear of crosslays.	$3,451
3310-0115	Jack leg covers polished stainless steel. Includes (2) polished stainless steel extension covers and (2) painted fixed covers.	$1,732
3310-0116	Transverse compartment floor to be extended out to approx 4" from inside of door opening in L1.	$526
3310-0117	Pikepole/backboard storage. Available on HP75/78 SideStacker only. The access door to match the rear body finish.	$609
3310-0118	Crosslay triple w/dry lay. Includes (2) 5.5" wide single stack crosslays to hold up to 200' of 2.0" DJ (each), (1) 6" wide single stack crosslay to hold up to 150'-200' 2.5" DJ and (1) 6" wide dry lay for up to 150-200' of 3.0" DJ. Includes storage pan to rear of crosslays if applicable.	$4,360
3310-0119	Auxiliary jack pad 24X24x1.5 poly (4) with textured finish and rope handles. Includes mounting brackets (welded on).	$2,955
3310-0120	Transverse compartment floor to be extended out to door opening in R1.	$397
3310-0123	Crosslay double w/dry lay. Includes (2) 5.5" wide single stack crosslays to hold up to 200' of 2.0" DJ or 150'-200' 2.5" DJ (each) and (1) 5.5" wide dry lay for up to 150-200' of 2.5" DJ. Includes storage pan to rear of crosslays.	$3,451
3310-0125	Recessed tubes for (4) pike poles. Tubes to be for (2) 8' and (2) 10' poles.	$488
3310-0126	Storage compartment on top of body. Box to be dia plt approx 90L x 10H x 16W with lift-up door on outboard side of box. Locate over L4/L5/L6 and R4/R5/R6.	$1,667
3310-0127	Crosslay quad w/dry lay. Includes (3) 5.5" wide single stack crosslays to hold up to 200' of 2.0" DJ or 150'-200' 2.5" DJ (each) and (1) 6" wide dry lay for up to 150-200' of 3.0" DJ. Includes storage pan to rear of crosslays if applicable.	$4,360
3310-0128	Pike pole/Ladder storage. Available on HP75/78 SideStacker with tall R1 & HM100/110 SideStacker only. The access door to match the rear body finish.	$609
3310-0129	Crosslay triple to hold 400' of 1.75" DJ (each) in two forward lays and up to 300' of 2.5" DJ in rear lay. Includes storage pan to rear of crosslays.	$3,451
3310-0130	Crosslay quad with (2) 4.25" wide single stack to hold up to 200' of 2.0" DJ (each) and (2) 5.5" wide to hold up to 150'-200' 2.5" DJ (each). Includes storage pan to rear of crosslays	$4,360
3310-0131	Upper storage box w/hinged cover (PR). Boxes to be dia plt approx 20" wide x 72" long x 11" deep. Lid to be hinged on outboard side with a gas spring hold-open and chrome grab handle offset to the rear. Left side compt to have a full length divider centered side to side. Locate on top of the body between the upper transverse compartments and the turntable.	$3,052
3310-0132	Hose storage box w/hinged cover. Box to be dia plt approx 18" wide x 64" long x 8" deep. Lid to be hinged on outboard side with a gas spring hold-open and chrome grab handle. Floor to have extruded alum slats. Locate on top of body left side offset forward.	$1,075
3310-0133	Storage boxes above officer side recessed side mount ladder offset rearward. Provide (3) diamond plate storage boxes with drop down doors and D-ring latches. Two rearward boxes to be approx 80" wide each with remaining space for third box.	$2,435
3310-0134	Rear ladder tunnel doors. Vertically hinged diamond plate. Doors to hinge on outboard sides and latch in the middle. D-ring to be on right hand "prmary" door.	$658
3310-0135	Recessed tubes for (6) 16' pike poles. Tubes to have locking slots to hold poles in compt IPO doors.	$855
3310-0136	Compartments officer side tandem axle HM SideStacker with 300 gallon tank. Includes rescue style extended height compartments ahead of wheel well, compartment over forward tandem and extended hosebed.	$30,321
3310-0137	Compartments driver side tandem axle HM100/110 SideStacker with 300 gallon tank. Includes rescue style extended height compartments.	$40,165
3310-0138	Crosslay double (2) 4.25" wide single stack to hold up to 200' of 2.0" DJ (each). Includes storage pan to rear of crosslays	$2,544
3310-0139	Pikepole/Ladder storage. Holds (4) pike poles and (1) 10' attic with shoes. Available on rear mount platform only. The access doors to match the rear body finish.	$1,086
3310-0140	Crosslay double (1) 7.5" wide double stack to hold up to 400' of 2.0" DJ and (1) 10.5" wide to hold 300'-400' of 2.5" DJ. Includes storage pan to rear of crosslays.	$2,982
3310-0141	Body wheelwell compartments (4). Driver side forward, driver side rearward and officer side rearward approx 24" W x 6" H x 26" D. Officer side forward approx 48" W x 6" H x 26" D. All with drop down doors. Door material to match wheelwell finish. N/A with 8 SCBA tubes (6 max).	$2,156
3310-0142	Compartments officer side CR100/95 platform SideStacker with 500g tank. Includes rescue style extended height compartments ahead of wheel well with extended hosebed and optional R3 compartment above forward tandem.	$29,421
3310-0144	Rear ladder tunnel doors. Vertically hinged smooth plate aluminum. Doors to hinge on outboard sides and latch in the middle. D-ring to be on right hand "primary" door.	$658
3310-0145	Storage boxes above officer side recessed side mount ladder offset rearward. Provide (2) diamond plate storage boxes with drop down doors and D-ring latches. Boxes to be approx 93" wide each.	$2,392
3310-0147	Compartments officer side HP100 SideStacker 3" lowered body with 450g tank. Includes rescue style extended height compartments ahead of wheel well with extended hosebed and optional R3 compartment above forward tandem.	$32,285
3310-0148	Compartments driver side tandem axle HP SideStacker 3" lowered body with 450g tank. Includes rescue style extended height compartments.	$42,239
3310-0149	Fixed diamond plate cover at front of hosebed approx 24" long.	$542
3310-0151	Crosslay triple 7.5w x 23d (to 3x3) to hold up to 400' of 2.0" DJ (each). Includes storage pan to rear of crosslays (if applicable).	$3,888
3310-0152	Crosslay dry storage. Includes 20"W storage area and storage pan to rear of crosslay.	$3,451

3310-0153	Hose storage box w/hinged cover. Box to be dia plt approx 18" wide x 64" long x 8" deep. Lid to be hinged on outboard side with a gas spring hold-open and chrome grab handle. Floor to have extruded alum slats. Locate on top of body right side offset forward.	$1,075
3310-0154	Recessed tubes for (8) pike poles. Tubes to be sized for (2) 6', (2) 8', (2) 10', and (2) 12' poles.	$811
3310-0155	Body wheelwell compartments (2) above forward tandem approx 24" W x 6" H x 26" D with drop down doors. Door material to match wheelwell finish.	$745
3310-0157	(8) pike pole style tubes to provide storage for brooms, shovels etc. Assembly located in L1/R1 bolted to bottom of transverse shelf. Tubes to be spaced down 2" and recessed in from inside of door opening by 10" on each side. Includes warning label (569518) on each side of compartment.	$811
3310-0158	Recessed tubes for (6) 12' pike poles. Tubes to have locking slots to hold poles in compt.	$749
3310-0159	Side intake panels Zolatone black. HP95MM no tank/pump only.	$306
3310-0160	Crosslay triple w/dry lay. All to be 31" deep (to 3x3) with approx 28" high dividers. Includes (2) 4.25" wide single stack crosslays to hold 200' of 1.75" DJ (each), (1) 5.5" wide single stack crosslays to hold 200' of 2.5" DJ and (1) 5.5" wide dry lay for 200' of 2.5" DJ. Includes storage pan to rear of crosslays if applicable.	$4,797
3310-0163	Rear ladder tunnel door. Smooth plate lift up door to open 20 degrees past horizontal. Door will be painted.	$870
3310-0164	Compartments driver side tandem axle HM100/110 SideStacker with 500 gallon tank. Includes rescue style extended height compartments (L1-L3).	$40,683
3310-0165	Compartments officer side tandem axle HM SideStacker with 500 gallon tank. Includes rescue style extended height compartments ahead of wheel well, compartment over forward tandem (extended height) and extended hosebed.	$30,841
3310-0166	Crosslay quad with (3) 4.25" wide single stack to hold up to 200' of 2.0" DJ (each) and (1) 5.5" wide to hold up to 150'-200' 2.5" DJ. Includes storage pan to rear of crosslays.	$4,360
3310-0167	Fixed diamond plate cover at front of hosebed approx 12" long.	$542
3310-0168	Crosslay triple 28" deep (to 3x3). Includes (2) 4.25" wide single stack to hold up to 250' of 1.75" DJ(each) and (1) 8.75" wide dbl stack to hold 500' of 1.75" DJ. Includes storage pan to rear of crosslays.	$4,641
3310-0169	Pikepole/Ladder storage. Holds (2)6' APH6, (2)8' APH8, (2)12' APH12 Fire Hooks Unlimited Inc. pike poles and (1) FL-10 attic ladder. Available on HP75 SideStacker only. The access door to match the rear body finish.	$609
3310-0170	Crosslay Quad (3) 4.25" wide single stack to hold up to 200' of 2.0" DJ each and (1) 10.5 wide double stack to hold up to 300' of 2.5" DJ. Includes storage pan to rear of crosslays.	$4,601
3310-0171	Crosslay quad with (2) 4.25" wide single stack to hold up to 200' of 2.0" DJ (each), (1) 5.5" wide to hold up to 150'-200' 2.5" DJ and (1) 10.25" wide dry lay for up to 300' of 2.5" DJ.. Includes storage pan to rear of crosslays if applicable.	$4,360
3310-0172	Diamond plate trim plate at top of SideStacker hosebed to simiulate compartment top.	$251
3310-0173	Fuel fill door at rear of body. Finish to match rear of body.	$268
3310-0174	Provide gas shock for rear ladder tunnel doors at rear of body. To keep doors open when ladders are being deployed.	$165
3310-0175	Body wheelwell compartments (4) approx 26" W x 5" H x maximum depth permissible without interference with hydraulic line(s) reservoir(s) etc. A gasketed drop down door shall be installed on each compartment. Door material to match wheelwell finish.	$1,695
3310-0176	Transverse compartment floor to be extended out to approx 12" from inside of door opening in L1/R1.	$526
3310-0177	Pikepole/tool storage. Holds (3) pike poles and (3) Akron Brass Rubbish Hooks. Available on rear mount platform only. The access doors to match the rear body finish.	$1,086
3310-0178	Crosslay triple (2) 4.25" wide single stack to hold up to 200' of 2.0" DJ (each) and (1) 11" wide dbl stack to hold 300' of 3" DJ. Includes storage pan to rear of crosslays	$3,451
3310-0179	Cover plate over hydraulic generator lines located towards rear of compartment below generator.	$238
3310-0181	Crosslay triple (2) 7.50" wide double stack to hold up to 400' of 1.75" DJ (each) and (1) 5.5" wide single stack to hold up to 150'-200' 2.5" DJ. Includes storage pan to rear of crosslays	$3,888
3310-0182	Crosslay triple w/dry lay. Includes (2) 10w x 18d (to 3x3) double stack to hold up to 400' of 1.5" DJ or 250-300' of 2.5" DJ each and (1)16"w x 18d (to 3x3) wide dry lay. Does NOT include space for a dunnage pan to rear of crosslays.	$2,452
3310-0183	Recessed tubes for (6) pike poles (2)6', (2)8', (1)12' & (1)14'. Note 14' pike pole located officer side storage at bottom position. Not available on HP75 SideStacker.	$817
3310-0187	Compartments officer side CR100/95 platform with 300g tank. Includes rescue style extended height compartments.	$40,606
3310-0188	Rear SideStacker body access doors (4) to have single pan doors with slam style compartment latches.	$590
3310-0189	Storage box w/hinged cover. Box to be dia plt approx 13" wide x 96" long x 10" deep. Lid to be hinged on outboard side with slat flooring, gas spring hold-opens and chrome grab handle. Locate on top of right side extended high compartments offset rearward.	$923
3310-0190	Auxiliary jack pad 24X24 (PR) with side mounted handle and 2x2 aluminum angles welded to form u-shaped channel for jack foot. Includes mounting brackets. Note: Truck is not to be driven with pads on jack feet.	$1,211
3310-0192	Hose storage box w/hinged covers hinged on outboard side. Box to be dia plt approx 9" wide x 132" long x 14" deep. Cover to be two piece split in the middle with tab permanently attached to underside surface of one of the covers to support the other cover. Includes gas spring hold-opens, chrome grab handles and (2) butterfly latches for each cover. Floor to have extruded alum slats. Locate on top of body right side offset as far forward as possible.	$1,528

3310-0195	Compartments officer side tandem axle HP SideStacker. Includes rescue style extended height compartments ahead of wheel well with extended hosebed and optional R3 compartment above forward tandem.	$32,873
3310-0196	Notch compartment L2 in deep area above jack leg to allow for routing of hydraulic generator hoses.	$308
3310-0198	Crosslay double to hold up to 200' of 2" DJ (each). Includes storage pan to rear of crosslays. Stainless steel product.	$2,950
3310-0199	Crosslay triple 5.5" wide single stack to hold up to 200' of 2" DJ (each) or 150'-200' 2-1/2" DJ (each). Includes storage pan to rear of crosslays. Stainless steel product.	$4,004
3310-0200	Crosslay double 5.5" wide single stack to hold up to 200' of 2" DJ (each) or 150'-200' 2.5" DJ (each). Includes storage pan to rear of crosslays. Stainless Steel product.	$2,950
3310-0201	Crosslay double w/dry lay. Includes (2) 5.5" wide single stack crosslays to hold up to 200' of 2" DJ or 150'-200' 2.5" DJ (each) and (1) 11" wide dry lay for up to 300' of 3.0" DJ. Includes storage pan to rear of crosslays. Stainless Steel product.	$4,004
3310-0203	Crosslay triple (2) 4.25" wide single stack to hold up to 200' of 2" DJ (each) and (1) 5.5" wide to hold up to 150'-200' 2.5" DJ. Includes storage pan to rear of crosslays. Stainless steel product.	$4,004
3310-0204	Notch compartment R3 in deep area below compartment depth change offset to forward wall to allow for routing of hydraulic generator hoses.	$308
3310-0205	Additional "Safe Operating Grade Indicator" gauge shall be provided, gauge is in addition to gauge at rear of body. To be located side facing at rear of body midway up on body panel above corner tailboard. Aerial body only.	$111
3310-0206	Crosslay double. Both lays 10.875"W x 23"D (to 3x3) to hold up to 300-350' of 2.5" (each) or 300' of 3" DJ (each). Includes storage pan to rear of crosslays if applicable.	$2,982
3310-0207	Crosslay triple extra deep. All to be 31" deep (to 3x3) with approx 28" high dividers. Includes (2) 4.25" wide single stack crosslays to hold 200' of 1.75" DJ (each), (1) 5.5" wide single stack crosslays to hold 200' of 2.5" DJ. Includes storage pan to rear of crosslays if applicable.	$3,880
3310-0208	Jack leg opening covers smooth plate painted job color (2) sets. Includes outrigger covers and fixed filler panels.	$1,056
3310-0209	Forward jack pad access doors painted outside surface job color and inside surface zolatone gray IPO diamond plate. 95 Mid-mount only.	$411
3310-0210	Storage at rear of body in rear tow eye compartment for Junkin MIL-8131-W stokes basket and (2) two pike pole tubes for (1)10' and (1)12' poles. 95' Mid-Mount only.	$462
3310-0211	Diamond plate storage box with hinged lid to outside for (2) K12 power cut saws. Box to be approx 48L x 18W x 18H includes butterfly latch, gas shock hold-upen and chrome grab handle. Locate on top of body right side offset forward.	$884
3310-0212	Crosslay triple extra deep. All to be 31" deep (to 3x3) with approx 28" high dividers (notched). Includes (2) 4.25" wide single stack crosslays to hold 250' of 1.75" DJ (each), (1) 5.5" wide single stack crosslays to hold 200-250' of 2.5" DJ. Includes storage pan to rear of crosslays if applicable.	$3,880
3310-0213	Pike pole/Ladder storage. Available on HP75/78 SideStacker with tall R1 & HM100/110 SideStacker only. The pike pole tubes to accomodate APH pike poles. The access door to match the rear body finish.	$609
3310-0214	Jack leg opening covers polished stainless steel (2) sets. Includes outrigger covers and fixed filler panels.	$1,732
3310-0215	Transverse compartment floor to be extended out to door opening in L1.	$398
3310-0216	Compartments officer side tandem axle HP eMAX SideStacker. Includes rescue style extended height compartments ahead of wheel well with extended hosebed.	$30,697
3310-0217	Storage box w/hinged cover. Box to be dia plt approx 15" wide x 96" long x 15" deep. Lid with 1.5" lip to be hinged on outboard side with (2) thumb latches, (3) EON LED lights mounted to lid to illuminate interior when open , gas spring hold-opens and chrome grab handle. Locate on top of body right side above R1/R2.	$1,368
3310-0218	Storage box w/hinged cover. Box to be dia plt approx 15" wide x 96" long x 15" deep. Lid with 1.5" lip to be hinged on outboard side with (2) thumb latches, (3) EON LED lights mounted to lid to illuminate interior when open , gas spring hold-opens and chrome grab handle. Locate on top of body left side above L1/L2.	$1,368
3310-0219	Storage box w/hinged cover. Box to be dia plt approx 16" wide x 43" long x 12" deep. Lid to be hinged on outboard side with gas shock hold-opens and chrome grab handle. Locate on top of body over R1 offset forward.	$907
3310-0220	Crosslay single (1) 10.5" wide double stack to hold up to 300-400' of 2.5" DJ. Includes storage pan to rear of crosslays.	$1,393
3310-0221	Compartments driver side tandem axle HP eMAX SideStacker, med cab, 240 WB. Includes rescue style extended height compartments.	$40,683
3310-0222	Rear turntable access door. Smooth plate lift up door to open 20 degrees past horizontal. Door will match rear body finish.	$870
3310-0223	Compartments driver side HP100 industrial platform SideStacker with short cab, 1000 gallon tank and 260" WB. Includes rescue style extended height compartments and raised rear perimeter aft of rear jack legs. The door on small compts next to rear outrigger to match wheelwell. Requires aerial envelope controls.	$41,644
3310-0224	Compartments officer side HP100 industrial platform SideStacker with 1000 gallon tank and 260" WB. Includes rescue style extended height compartments ahead of wheel well with extended hosebed, optional R3 compartment above forward tandem and raised rear perimeter aft of rear jack legs. Requires aerial envelope controls.	$30,856
3310-0225	Compartments officer side CR100/95 platform with 300g tank. Includes rescue style extended height compartments.	$40,584
3310-0226	Jack leg opening covers smooth plate painted job color (4) sets. Includes painted plate outrigger covers and fixed painted plate filler panels. HM100/110 requires surface mount warning lights.	$1,667

3310-0227	Exterior body stepping surfaces (running boards, floor of left rear staircase, staircase turntable access steps and rear area at top of access steps) to be 3/16" smooth plate with gator grip painted black durabak IPOS diamond plate.	$1,296
3310-0229	Compartments driver side HP100 Platform SideStacker 260" W/B with medium cab and 300g tank. Includes rescue style extended height compartments. The door on small compts next to rear outrigger to match wheelwell.	$39,568
3310-0231	Compartments officer side HP100 SideStacker 3" lowered body with 450g tank. Includes rescue style extended height compartments ahead of wheel well with extended hosebed.	$31,268
3310-0234	Compartments officer side HP100 industrial platform SideStacker with 750 gallon tank, 252" WB and 58-62K rear. Includes rescue style extended height compartments ahead of wheel well with extended hosebed and raised rear perimeter. Requires aerial envelope controls.	$29,290
3310-0235	Compartments driver side HP100 industrial platform SideStacker with short cab, 750 gallon tank, 252" WB and 58-62K rear. Includes rescue style extended height compartments and raised rear perimeter. The door on small compts next to rear outrigger to match wheelwell. Requires aerial envelope controls.	$40,584
3310-0236	Recessed tubes for (4) pike poles. Tubes to be for (2) 6' and (2) 12' poles.	$488
3310-0237	Body wheelwell compartments (2), one each side above rearward tandem wheel approx 24" W x 6" H x 26" D with drop down doors. Door material to match wheelwell finish.	$745
3310-0238	Wall at rearward most point between cord reel enclosure storage boxes to enclose open storage area beneath aerial. Shall be bolt-in 3/16 Dia Plt. with diamonds facing rear. May require notching for lift cylinder clearance if applicable.	$357
3310-0239	Compartments officer side HP100 Platform SideStacker with 300 gallon tank, 252" WB and 58-62K rear. Includes rescue style extended height compartments ahead of wheel well, compartment over forward tandem and extended hosebed. Requires aerial envelope controls.	$30,413
3310-0240	Compartments driver side HP100 Platform SideStacker for long cab, 300 gallon tank, 252" WB and 58-62K rear. Includes rescue style extended height compartments ahead of wheel well. The door on small compt next to rear outrigger to match wheelwell. Requires aerial envelope controls.	$40,560
3310-0241	Compartments officer side HP100 Platform SideStacker with 300g tank. Includes rescue style extended height compartments ahead of wheel well and rescue style compartments IPO hosebed. The door on small compts next to rear outrigger to match wheelwell.	$30,946
3310-0242	Compartments driver side HP100 Platform SideStacker with 300g tank (lowered 2"). Includes rescue style extended height compartments. The door on small compts next to rear outrigger to match wheelwell.	$41,644
3310-0243	Compartments officer side HP100 Platform SideStacker with 300g tank (lowered 2"). Includes rescue style extended height compartments ahead of wheel well and rescue style compartments IPO hosebed. The door on small compts next to rear outrigger to match wheelwell.	$41,644
3310-0244	Contoured beavertail compartments. Full height door for compartment openning. Includes special mount painted job color for upper rear warning light and rear facing scene (if applicable).	$3,539
3310-0246	Auxiliary jack pad 24X24 (4) with side mounted handle. Includes (2) double mounting brackets welded in place.	$2,210
3310-0247	Compartments driver side HP100 industrial platform SideStacker for short cab, 1000 gallon tank, 252" WB and 58-62K rear. Includes rescue style extended height compartments. The door on small compt next to rear outrigger to match wheelwell. Requires aerial envelope controls.	$41,644
3310-0248	Compartments officer side HP100 industrial platform SideStacker with 1000 gallon tank, 252" WB and 58-62K rear. Includes rescue style extended height compartments ahead of wheel well with extended hosebed, optional R3 compartment above forward tandem. Requires aerial envelope controls.	$30,856
3310-0249	Storage box for handheld jack control. Approx size: 14"wide x 8" high x 14"deep. Includes hinged diamond plate door with push button latch. Locate in driver side rear staircase down low recessed in back wall.	$324
3310-0250	Diamond plate trm between turntable disc and top of body. Required on Metro 100 with waterway.	$447
3310-0251	Recessed storage for (4) pike poles IPO recessed tubes at rear of body. Includes boxes at driver's side for (2) D-handled 6' poles and officer's side for (2) D-handled 8' poles. The access doors to match the rear body finish. For use with rear mount aerials.	$1,086
3310-0253	Recessed tubes for (4) pike poles. Tubes to be for (2) APH-6', (1) APH-8' and (1) APH-12' Fire Hooks Unlimited poles.	$488
3310-0254	Diamond plate storage box with hinged lid to outside for chain saws. Box to be approx 35L x 16W x 18H includes butterfly latch, gas shock hold-upen and chrome grab handle. Locate on top of body right side offset forward.	$846
3310-0255	Crosslay triple extra deep. All to be 27" deep (to 3x3). Includes (2) 4.25" wide single stack crosslays to hold 225' of 1.75" DJ (each), (1) 5.5" wide single stack crosslays to hold 200' of 2.5" DJ. Includes storage pan to rear of crosslays if applicable.	$3,880
3310-0256	Compartments driver side tandem axle HP eMAX SideStacker, med cab, 240 WB. Includes rescue style compartments.	$38,261
3310-0257	Compartments officer side tandem axle HP eMAX SideStacker, med cab, 240 WB. Includes low side compartments with full length hosebed. Decreases height of compartments R1 and R2.	$23,304
3310-0259	Recessed tubes for (10) pike poles. Tubes to be sized for (4) 8', (2) 10' and (4) 12' poles. Locate (5) each side of rear ladder tunnel.	$1,014
3310-0260	Aluminum plate provided at bottom behind fuel fill door at rear of body to protect wiring from spills when refueling.	$126
3310-0262	Upper dunnage area extension 34 x 73 diamond plate.	$622
3310-0263	Crosslay triple to hold 200' of 1.75" DJ (each) in two forward lays and 200' of 2.5" DJ in rear lay. Includes storage pan to rear of crosslays.	$3,451

3310-0264	Compartments driver side HP100 Platform SideStacker for long cab, 300 gallon tank, 252" WB and 58-62K rear. Includes rescue style extended height compartments ahead of wheel well and raised rear perimeter. The door on small compt next to rear outrigger to match wheelwell. Requires aerial envelope controls.	$40,560
3310-0265	Compartments officer side HP100 Platform SideStacker with 300 gallon tank, 252" WB and 58-62K rear. Includes rescue style extended height compartments ahead of wheel well, compartment over forward tandem and extended hosebed and raised rear perimeter.	$30,413
3310-0266	Rear ladder tunnel door. Smooth plate lift up door to open 20 degrees past horizontal. Door will be painted to match the "two tone" sale code color.	$870
3310-0267	Compartments officer side HP100 Platform SideStacker with 300 gallon tank, 252" WB and 58-62K rear. Includes rescue style extended height compartments ahead of wheel well, extended hosebed and raised rear perimeter.	$29,264
3310-0268	Compartments driver side HP100 Platform SideStacker for medium cab, 300 gallon tank, 252" WB and 58-62K rear. Includes rescue style extended height compartments ahead of wheel well and raised rear perimeter. The door on small compt next to rear outrigger to match wheelwell. Requires aerial envelope controls.	$40,560
3310-0269	Recessed tubes for (6) pike poles. Not available on HP75 SideStacker.	$609
3310-0270	Pike pole/Attic ladder storage at rear of body each side of ladder tunnel. Shall hold (3) pike poles and (1) 8' Duo-Safety attic ladder on driver side and (3) pike poles and (1) 10' Duo-Safety attic ladder on officer side. Available on rear mount platform only. The access doors to match the rear body finish.	$1,697
3310-0271	Recessed tubes for (6) pike poles: (2)8', (1)10', (1)12', (1) 14' & (1)16'. Note 14' & 16' pike poles located one each side in lower storage at rear of body. Not available on HP75 SideStacker.	$1,030
3310-0272	Compartments officer side tandem axle HM100/110 SideStacker 3" lowered body with 450 gallon tank. Includes rescue style extended height compartments ahead of wheel well and extended hosebed.	$32,875
3310-0273	Compartments driver side tandem axle HM100/110 SideStacker 3" lowered body with 450g tank. Includes rescue style extended height compartments ahead of wheel well.	$42,718
3310-0274	Rear tandem wheel well splash shields provided on driver and officer sides to prevent road salt from getting between ladder tunnel platework and top of torque box. Shields must be removable (bolt-on) for periodic cleaning. Aerial application only.	$1,588
3310-0275	Crosslay quad with (2) 4.25" wide single stack to hold up to 200' of 2.0" DJ (each), (1) 5.5" wide to hold up to 150'-200' 2.5" DJ and (1) 22" wide dry lay for up to 600' of 3" DJ. Includes storage pan to rear of crosslays if applicable.	$4,360
3310-0276	Crosslay double extra deep. All to be 31" deep (to 3x3) with approx 28" high dividers. Includes (2) 5.5" wide single stack crosslays to hold up to 250' of 2.0" DJ (each) or 200' 2.5" DJ (each). Includes storage pan to rear of crosslays if applicable.	$3,379
3310-0277	Boxed out rear ladder tunnel doors. Horizontally hinged smooth plate (drop down). Doors to match rear body finish.	$1,266
3310-0278	Notch compartment R4 lower ceiling below offset, to allow for routing of 5" rear intake pipe to exit out at rear of body beneath officer side ladder tunnel.	$308
3310-0279	Crosslay triple 5.5" wide single stack to hold up to 200' of 2.0" DJ (each) or 150'-200' 2.5" DJ (each). Includes smooth plate IPO diamond plate storage pan painted black durabak to rear of crosslays.	$3,595
3310-0281	Rear ladder tunnel doors. Horizontally hinged drop down smooth plate. Doors to match rear body finish.	$658
3310-0282	Combine L4 lower with L5 for mounting long handled tools on back wall. Note this applies to the height of L5 only.	$353
3310-0283	Crosslay triple 10.5w x 15d (to 3x3) to hold up to 200' of 2.5" DJ (each). Includes storage pan to rear of crosslays if applicable.	$3,888
3310-0284	Crosslay double (1) 5.5" wide single stack to hold up to 200' of 2.0" DJ and (1) 16.5 wide triple stack for dry storage to hold up to 400' of 3.0" DJ. Includes storage pan to rear of crosslays (if applicable).	$2,592
3310-0285	Compartments driver side tandem axle HP SideStacker. Includes rescue style compartments, ext height on L1-L3.	$40,683
3310-0286	Compartments officer side tandem axle HP SideStacker. Includes rescue style compartments ahead of wheel well, with extended hosebed and optional R3 compartment above forward tandem.	$30,820
3310-0287	Bolt-in floor. Location: turntable access area. HP75/78 only.	$352
3310-0288	Compartments officer side HP100 Platform SideStacker, 400-500 gallon tank, 252" WB and 58-62K rear. Includes rescue style extended height compartments ahead of wheel well and extended hosebed. Requires aerial envelope controls.	$29,264
3310-0289	Compartments driver side HP100 Platform SideStacker for long cab, 400-500 gallon tank, 252" WB and 58-62K rear. Includes rescue style extended height compartments ahead of wheel well. The door on small compt. next to rear outrigger to match wheelwell. Requires aerial envelope controls.	$40,560
3310-0290	Jack leg opening covers brushed finish S/S (2) sets. Includes outrigger covers and fixed filler panels. HP95 MM only.	$268
3310-0291	Jack leg opening covers brushed finish S/S (4) sets. Includes outrigger covers and fixed filler panels.	$535
3310-0292	Jack leg opening covers brushed finish S/S (2) sets. Includes outrigger covers and fixed filler panels. For HP75/78 and Tiller.	$365
3310-0293	Crosslay Triple (2) single stacked and (1) double stacked Midmount. Forward two lays 5.5"W x 18"D to hold up to 200' of 2" DJ each. Rearward lay 10.5"W x 18"D to hold up to 300' of 2.5" DJ. Midmount only.	$3,228

3310-0294	Storage box w/hinged cover for miscellaneous items. Box to be dia plt approx 16" wide x 60" long x 10" deep. Lid to be hinged on outboard side with a gas spring hold-open, chrome grab handle and butterfly latch. Locate on top of body on compartment top over L4.	$1,075
3310-0295	Additional "Safe Operating Grade Indicator" gauge (PR) shall be provided, gauge is in addition to gauge at rear of body. To be located one each side in driver and officer side rear side staircases attached to back wall. Aerial body only.	$221
3310-0296	Auxiliary jack pad 24X24 (4) with handle welded to top surface of pad. Includes mounting brackets.	$2,210
3310-0297	Recessed tubes for (6) pike poles. Not available on HP75 SideStacker.	$609
3310-0298	Auxiliary jack pad 26X26x1.5 poly (4) with textured finish and rope handles. Includes (2) double mounting brackets (welded on).	$3,157
3310-0299	Miscellaneous long handle tool storage sleeve. Suspended from ceiling mounted just below roll-up door approximate size: 8"H x 16"W x 89"L. Includes 1.5" lip on each side of opening to prevent tools from interfering with roll-up door. Location: L1/R1 transverse offset rearward.	$1,167
3310-0300	Compartments driver side HPS105 ladder SideStacker and 300 gallon tank (set up for 42" PPNL for 240" WB medium cab). Includes rescue style extended height compartments and raised rear body for improved angle of departure.	$39,568
3310-0301	Compartments officer side HPS105 ladder SideStacker with 300 gallon tank. Includes rescue style extended height compartments ahead of wheel well with extended hosebed and raised rear body for improved angle of departure.	$28,272
3310-0302	Boxed out rear ladder tunnel doors. Horizontally hinged (drop down) on driver side, vertically hinged on officer side (hinged outboard). Doors to match rear body finish.	$1,266
3310-0303	Auxiliary jack pad 24X24 (4) with 20 degree formed handle. Includes (4) mounting brackets.	$2,210
3310-0304	Jack leg opening covers smooth plate painted Durabak black (4) sets. Includes painted plate outrigger covers and fixed painted plate filler panels. HM100/110 requires surface mount warning lights. Only available with jack leg tie off eye on outriggers.	$1,667
3310-0310	Auxiliary jack pad 26X26 (4) with 20 degree formed handle. Includes (2) double mounting brackets.	$1,893
3310-0311	Auxiliary jack pads 24X24 (4) with 20 degree formed handle. Includes mounting brackets to store (2) each side of the body next to front drop down jacks.	$1,819
3310-0314	Auxiliary jack pad 24X24 (2) with 20 degree formed handle. Includes mounting brackets.	$1,106
3310-0317	Hose storage box w/hinged covers hinged on outboard side. Box to be dia plt approx 11" wide x 115" long x 16" deep. Cover to be two piece split in the middle with tab permanently attached to underside surface of one of the covers to support the other cover. Includes gas spring hold-opens, chrome grab handles and (2) butterfly latches for each cover. Floor to have extruded alum slats. Locate on top of body right side offset as far forward as possible.	$1,528
3310-0318	Compartments officer side HP100 Platform SideStacker with 300g tank (lowered 2"). Includes rescue style extended height compartments ahead of wheel well, compartment over forward tandem and extended hosebed.	$30,831
3310-0319	Hose/Electric ladder pipe storage box w/hinged cover to outside for 100' of 3" DJ and Akron Electric Ladder Pipe monitor model#1494 with 5177 nozzle. Box to be dia plt approx 12" wide x 88" long x 16" deep with divider offset 50" from forward wall to separate hose storage side from electric ladder pipe storage side. Includes gas spring hold-opens, chrome grab handle and (2) butterfly latches. Hose storage side (38" long) floor to have extruded alum slats. Locate on top of body right side offset forward.	$1,779
3310-0320	Body exterior aluminum plate work to be smooth plate IPO diamond plate and painted job color as follows: upper side facing and rear facing panels driver and officer side above compartments and fuel fill hinged door and fixed panel below door each side to rear of tandem axle.	$518
3310-0322	Compartments officer side HP100 Platform SideStacker with 300g tank. Includes rescue style extended height compartments and rescue style compartments IPO hosebed (Note officer side compartments to match driver side). The door on small compt next to rear outrigger to match wheelwell.	$40,312
3310-0323	Compartments driver side HP100 Platform SideStacker with 300g tank. Includes rescue style extended height compartments and separate rear side compartment ahead of 18"W rear side staircase. The door on small compt next to rear outrigger to match wheelwell.	$40,312
3310-0324	Crosslay double w/dry lay 26" deep. Includes (1) 4.25" wide single stack to hold up to 200' of 2.0" DJ, (1) 5.5" wide single stack to hold up to 200' of 2.5" DJ and (1) 11" wide dry lay to hold up to 300' of 3" DJ. Includes storage pan to rear of crosslays (if applicable).	$3,451
3310-0325	Storage box w/hinged cover for miscellaneous items. Box to be dia plt approx 16" wide x 60" long x 10" deep. Lid to be bi-fold style and hinged on outboard side with a gas spring hold-open, chrome grab handle and butterfly latch. Floor to have extruded aluminum slats. Locate on top of body on compartment top over L4.	$1,261
3315-0036	Storage rack for two DOT or ASME air bottles. Mounted either vertical or horizontal in a compartment or top of body. Locate top of body in upper storage beneath aerial offset forward transversely mounted ahead of aerial hydraulic reservoir.	$483
3315-0044	Storage rack for four (4) DOT or ASME air bottles. Mounted horizontal in roof top compartments. Locate two (2) each side in roof top compartments for dealer supplied and installed DOT/ASME bottles and Cascade system.	$783
3315-0047	Storage rack for two DOT or ASME air bottles. Mounted either vertical or horizontal in a compartment or top of body. Locate: [#LOC].	$483
3320-0001	SCBA large tube bottle rack. Location: [#LOC].	$96
3320-0002	SCBA Small Tube Bottle Rack. Location: [#LOC]	$81
3320-0005	SCBA Bottle Storage. (4) Cast Product SCBA bottle storage with gasketed doors. (2) each side in rear wheel well area.	$707

3320-0009	SCBA Bottle Storage. (8) Cast Product SCBA bottle storage with gasketed doors. (4) each side in rear wheel well area.	$1,410
3320-0010	SCBA Bottle Storage. (4) Cast Product SCBA bottle storage doors. (2) each side in rear wheel well area. Each tube to include a ribbed rubber insert mounted to rear of tube.	$635
3320-0018	SCBA Bottle Storage. (8) Fire Shopp SCBA bottle storage with hinged doors with push button latches. (4) officer side and (4) driver side in wheel well area.	$1,646
3320-0020	SCBA Bottle Storage. (4) Fire Shopp SCBA bottle storage with hinged doors with push button latches. (2) officer side and (2) driver side in wheel well area.	$1,198
3320-0023	SCBA Storage. (6) Cast Product SCBA bottle storage with gasketed doors. (3) each side rear wheel well area located in center and rearward positions.	$1,058
3320-0025	SCBA Storage. (6) Cast Product SCBA bottle storage with gasketed doors. (4) Driver side rear wheel well area and (2) officer side (located either side of the rearward tandem wheel).	$1,058
3320-0031	Zico, metal QUIC-STORAGE bottle rack for large bottles for 6.1" to 7.4" cylinder. Locate in [#LOC]. Each unit will have straps to hold the bottle in and all top units will have a flat top. Each unit will be bolted together and be [#COL] PVC coated.	$131
3320-0032	Zico, metal QUIC-STORAGE for small bottles 5.3" to 5.8" cylinder. Locate in [#LOC]. Each unit will have straps to hold the bottle in, an angle floor to hold bottle in place, and all top units will have a flat top. Each unit will be bolted together and be [#COL] PVC coated.	$131
3320-0033	SCBA/Wheel Chock Storage. (4) Cast Product SCBA bottle storage with gasketed doors, two (2) each side centered between tandems. Four (4) wheel chock storage compartments with hinged doors (doors to match wheel well material) and push button latches located two (2) each side (1) forward and (1) rearward in each rear wheel well area for (1) SAC-44-E wheel chock to be stored per compartment. Does not include wheel chocks.	$2,795
3320-0040	SCBA bottle storage. (4) Fire Shopp style SCBA bottle storage with hinged brushed stainless steel doors with push-button latches. (2) officer side and (2) driver side in the rear wheel well area.	$1,198
3320-0042	SCBA Bottle Storage. (8) Cast Product SCBA bottle storage with gasketed doors with locking latches. (4) each side in rear wheel well area.	$1,636
3320-0046	SCBA Bottle Storage. (12) E-ONE SCBA bottle storage with hinged doors (doors to match wheel well material) with push button latches and one aluminum tray for each bottle. Each side of body to have (3) Double SCBA bottle storage compartments, (1) forward, (1) rearward and (1) between tandem offset to rear in wheel well area.	$1,592
3320-0053	SCBA Bottle Storage. (4) E-ONE SCBA bottle storage with hinged doors (doors to match wheel well material) with push button latches. (2) officer side and (2) driver side in wheel well area.	$675
3320-0054	SCBA Bottle Storage. (4) Fire Shopp SCBA double bottle storage with hinged doors and push button latches. (2) SCBA bottles forward and (2) SCBA bottles rearward each side in wheel well area.	$1,646
3320-0055	SCBA Storage. (6) Fire Shopp SCBA bottle storage with hinged doors with push button latches. (4) Driver side rear wheel well area and (2) officer side (located either side of the rearward tandem wheel).	$1,796
3320-0061	SCBA Bottle Storage. (4) Cast Product SCBA bottle storage doors. (2) each side in rear wheel well area.	$635
3320-0064	SCBA/Fire Extinguisher Storage. Eight (8) storage compartments with hinged doors (doors to match wheel well material) and push button latches. Four each side in rear wheel well area.	$2,795
3320-0069	PAC Cylinder Mate. Locate in [#LOC]. Each unit will be black in color and have a strap to secure bottle.	$226
3320-0072	SCBA Bottle Storage. (8) Cast Product gasketed doors with (7) SCBA bottle storage tubes. (4) Cast Product SCBA bottle storage with gasketed doors on officer's side and (3) Cast Product SCBA bottle storage tubes with (4) gasketed doors on driver's side. Recessed fuel fill to be protected behind the rear driver side SCBA door.	$1,410
3320-0073	SCBA bottle storage/Recessed fuel fill. (7) Fire Shopp style SCBA bottle storage with hinged polished stainless steel doors with push-button latches. (4) officer side, (3) driver side and (1) recessed fuel fill with cast stainless housing and hinged SCBA style polished stainless steel door offset rearward in wheel well area. Note all doors to match.	$4,005
3320-0074	SCBA Bottle Storage. (16) E-ONE SCBA bottle storage with hinged doors (doors to match wheel well material) with push button latches and one aluminum tray for each bottle. (8) officer side and (8) driver side in wheel well area.	$2,120
3320-0077	SCBA/Wheel Chock Storage. (6) Cast Product SCBA bottle storage with gasketed doors, (2) two driver side centered between tandem and (4) four officer side. Two (2) wheel chock storage compartments with hinged doors (doors to match wheel well material) and push button latches located (2) two driver side (1) forward and (1) rearward in rear wheel well area for (1) one SAC-44-E wheel chock to be stored in each compartment. Does not include wheel chocks.	$2,795
3320-0081	Vision Mark tags (2) for driver side wheel well area SCBA bottle storage. Tags to have red letters on white background. (1) Tag forward inboard tube to read "WATER EXTINGUISHER". (1) Tag rearward inboard tube to read "DRY CHEM".	$100
3320-0083	SCBA Bottle Storage. (4) Fire Shopp SCBA double bottle storage for (8) bottles and (4) Fire Shopp SCBA single bottle storage for (4) bottles with hinged doors and push button latches (wired to door ajar). Double storage tubes located over forward tandem wheel and single storage tubes over rearward tandem wheel each side in rear wheel well area for a total of (12) SCBA bottles.	$2,842
3320-0087	SCBA Bottle Storage. (4) E-ONE SCBA bottle storage with hinged doors. Doors are smooth aluminum plate painted job color (doors only) with push button latches. (2) officer side and (2) driver side in wheel well area.	$949
3320-0089	SCBA Bottle Storage. (4) Fire Shopp SCBA bottle storage with hinged doors with push button latches with locking latches. (2) officer side and (2) driver side in wheel well area.	$1,395

3320-0090	SCBA bottle storage. (7) E-ONE SCBA bottle storage hinged doors. Doors are smooth aluminum plate painted job color (doors only) with push button latches. (4) Officer side and (3) driver side in wheel well area.	$1,659
3320-0092	PAC Cylinder Mate. Each unit will be black in color and have a strap to hold the bottle in. Locate: Inside rear body, drivers side, on top of counter top in rear most corner.	$226
3320-0094	SCBA Storage. (6) Cast Product SCBA bottle storage with gasketed doors. (3) each side rear wheel well area located in center and forward positions.	$1,058
3320-0098	SCBA/Wheel Chock Storage with hinged doors (doors to match wheel well material) with push button latches. (6) E-ONE SCBA bottle storage, (2) two driver side centered between tandem and (4) four officer side. Two (2) wheel chock storage compartments located (2) two driver side (1) forward and (1) rearward in rear wheel well area for (1) one SAC-44-E wheel chock to be stored in each compartment. Does not include wheel chocks.	$2,795
3320-0107	SCBA Bottle Storage. (4) Fire Shopp SCBA bottle storage with hinged doors with push button latches. (4) driver side only in wheel well area. Officer side SCBA not to be installed due to rear body plumbing options. Available only on commercial units with forward fuel tanks or custom applications with officer side only fuel fill.	$832
3320-0108	SCBA Storage. (6) Cast Product SCBA bottle storage with gasketed doors. (3) each side rear wheel well area located in center and rearward positions. Note rear bottle tube support brackets to be welded to body IPO bolted.	$1,058
3320-0109	Extinguisher Bottle Storage (PR). Includes hinged drop down stainless steel door with push button latch and fabricated aluminum bottle tray. Each storage compartment 26" deep to fit Amerex 420 2.5 gallon H2O extinguisher at 8" diameter or Ansul 1-20-G extinguisher at 9" diameter. Locate driver and officer side in rear tandem wheel well offset forward.	$2,660
3320-0113	SCBA Bottle Storage. (8) E-ONE SCBA bottle storage with hinged doors (doors to match wheel well material) with push button latches. Note one aluminum tray for each bottle in double storage compartments. Each side of body to have (2) Double SCBA bottle storage compartments (1) offset forward and (1) offset rearward over each tandem wheel in wheel well area.	$1,191
3320-0116	SCBA Bottle Storage. (10) E-ONE SCBA bottle storage with hinged doors (doors to match wheel well material) with push button latches. Note one aluminum tray for each bottle in double storage compartments. Each side of body to have (1) Double SCBA bottle storage compartment offset forward and (3) single storage compartments (2) between tandem and (1) offset to rear in wheel well area.	$1,592
3320-0121	SCBA Bottle Storage. (4) Fire Shopp SCBA double bottle storage and (4) Fire Shopp SCBA single bottle storage with hinged doors and push button latches to store twelve (12) SCBA bottles. Locate (2) Double SCBA bottle storage compartments (1) offset forward over each tandem wheel and (2) single storage compartments (1) offset rearward over each tandem wheel in wheel well area.	$2,358
3325-0001	E-ONE designed PTO driven HRT system, 10,500 PSI system, with 4 tool capability.	$46,135
3325-0003	E-ONE designed PTO driven HRT system, 10,500 PSI system, with 2 tool capability.	$30,869
3325-0004	XRT Hydraulic tool system with 2 tool capability. 10,500 PSI system. Includes selector vlv for each reel, hyd res / filter and remote cooler. Requires gen with XRT hyd pump.	$21,225
3325-0008	TNT PTO-TWIN Hydraulic tool system with 2 tool capability. 10,500 PSI system. Requires Harrison gen with IHT configuration. Pump location: [#LOC]	$11,863
3325-0009	XRT Hydraulic tool system with 3 tool capability. 5,000 PSI system. Includes selector vlv for each reel, hyd res / filter and remote cooler. Requires gen with XRT hyd pump.	$23,856
3325-0010	XRT Hydraulic tool system with 2 tool capability. 5,000 PSI system. Includes selector vlv for each reel, hyd res / filter and remote cooler. Requires gen with XRT hyd pump.	$24,856
3325-0011	Additional hydraulic reel valves. (2) Dump and (2) splitter valves shall be provided. The (2) dump valves are required when providing functionality for (2) additional reels. The (2) splitter valves are required to allow (2) tools to operate at each of (2) reels.	$13,440
3325-0014	XRT Hydraulic tool system with 3 tool capability. 10,500 PSI system. Includes selector vlv for each reel, hyd res / filter and remote cooler. Requires gen with XRT hyd pump.	$23,856
3325-0018	There will be a thru shaft for the generator to work off the same PTO as HRT system.	$2,119
3325-0019	E-ONE HRT hydraulic outlet control panel for Amkus tools. Location: driver and officer side front bumper.	$2,157
3330-0001	Slide-out platform, integral driver side running board (includes hand rail as applicable).	$1,332
3330-0002	Slide-out platform, rollerless. Includes chrome grab handle centered on the front face of the platform (includes hand rail as applicable). Located [#LOC].	$1,289
3330-0003	Rear slideout platform - rollerless HP75 / HP78 SideStacker 36" wide located below hosebed. Includes a chrome grab handle centered on the frt face of the platform and a handrail below hosebed.	$964
3330-0004	Slideout platform-recessed rear. Located below hosebed. Includes a handrail below hosebed. Requires extended hosebed on HP100, CR100, and 92 Pltfrm SideStacker bodies.	$870
3330-0007	Folding Step. Location [#LOC]. Each location requires a minimum of (1) handrail per NFPA.	$125
3330-0008	Handrail 12". Location [#LOC].	$110
3330-0023	Slideout platform-integral officer side running board. Not available with a front suction (includes handrail as applicable).	$1,332
3330-0029	Intermediate pump panel step officer side with forward tapered corner. Includes (1) lower and (1) upper folding step with (1) handrail and (1) recessed step light located above the intermediate step. Step light to be switched thru work light in cab.	$901
3330-0030	Intermediate pump panel step officer side with forward tapered corner. Includes (2) lower and (1) upper folding step with (1) handrail and (1) recessed step light located above the intermediate step. Step light to be switched thru work light in cab.	$1,019
3330-0042	Hansen white LED body hand rails upgrade package (includes pump module if applicable).	$1,292

3330-0059	Zico swing-out access ladder with 4 rungs on main ladder and 2 rungs on swing down ladder. Locate on right side of pump module offset to rear.	$1,852
3330-0072	Hansen red LED body handrails upgrade package.	$1,292
3330-0075	Slideout platform - SlideMaster. Location: [#LOC].	$1,700
3330-0079	Slide-out platform, rollerless. Includes chrome grab handle centered on the front face of the platform (includes hand rail as applicable for body mounted locations) and required step lighting. Located [#LOC].	$868
3330-0094	A pair of 12" handrails shall be supplied. Locate 1 each side outboard of ladder on roof.	$218
3330-0100	Step below body. Located below [#LOC]. Each location requires a minimum of (1) handrail / handhold per NFPA.	$331
3330-0105	Dual lighted LED folding step. Location: [#LOC]. Each location requires a minimum of (1) handrail per NFPA.	$118
3330-0114	Intermediate pump panel step officer side with forward tapered corner. Includes (1) lower and (1) upper dual LED lighted CPI folding step and a minimum of (1) handrail as req to meet NFPA. Step lights to be switched thru work light in cab.	$897
3330-0115	Intermediate pump panel step officer side with forward tapered corner. Includes (2) lower and (1) upper dual LED lighted CPI folding step and a minimum of (1) handrail as req to meet NFPA. Step lights to be switched thru work light in cab.	$1,012
3330-0125	Slideout platform-integral driver side running board (includes handrail as applicable). The platform step to be smooth plate with gator grip painted black durabak.	$1,601
3330-0128	Diamond plate step (approx. 12"w) with Gator Grip at center rear of body even with top of body to provide additional top deck area. Step to have tappered ends left and right and 1" lip extending up. Available on SideStacker style bodies only.	$724
3330-0130	Diamond plate gator grip overlay to be located on driver and officer compartment tops forward body and compartment tops ahead of turntable.	$701
3330-0139	Step below side intake / discharge panel (PR). Embossed dia plt with steel supports. Each location requires a minimum of (1) handrail / handhold per NFPA. eMAX only.	$1,294
3330-0150	Intermediate pump panel step officer side without taper. Includes (1) lower and (1) upper dual LED lighted CPI folding step and a minimum of (1) handrail as req to meet NFPA. Step lights to be switched thru work light in cab.	$897
3330-0153	Tailboard 12" bolt-on w/Bustin insert. Stainless steel body. Includes hand rail below hose bed and (1) underbody ground light on the officer's side.	$791
3330-0154	Full width brushed stainless steel rubrail for the back of aerial body.	$235
3330-0158	Step below side intake / discharge panel (PR). Gator grip diamond plate. Each location requires a minimum of (1) handrail / handhold per NFPA. eMAX only.	$990
3330-0163	Slide-out platform, integral below driver side running board (includes hand rail as applicable) with Bustin Tread insert. SS product only.	$1,332
3330-0164	Slide-out platform, recessed rear. Located below hose bed. Includes a hand rail near hose bed. Requires extended hose bed on HP100, CR100, and 92 Pltfrm SideStacker bodies. SS product.	$870
3330-0165	Handrail 24". Location [#LOC].	$198
3330-0166	Handrail 12". Location: Mount on rear of truck at E-One discretion.	$110
3330-0170	Slideout platform-roller-less. Includes chrome grab handle and retaining pin, centered on the front face of the platform (includes handrail as applicable for body mounted locations) and required step lighting. Located: [#LOC].	$868
3330-0174	Slideout platform-rollerless. Includes chrome grab handle centered on the front face of the platform (includes hand rail as applicable). The platform step to be smooth plate with gator grip painted black durabak. Located [#LOC].	$1,545
3330-0185	Step below side intake / discharge panel (PR). Gator grip plate constructed of 1/8" (.125") aluminum smooth plate with black Scorpion coating (rough finish) IPOS diamond plate. Each location requires a minimum of (1) handrail / handhold per NFPA. eMAX only.	$1,256
3330-0188	Hansen green LED body hand rails upgrade package (includes pump module if applicable).	$1,292
3330-0190	Step below side intake / discharge panel (PR). Smooth plate aluminum with gator grip painted black durabak. Each location requires a minimum of (1) handrail / handhold per NFPA. eMAX only.	$1,188
3330-0200	Step flop down rear 16" wide rung type (PR) IPO pocket step at rear side staircases.	$915
3330-0204	Diamond plate step (approx. 12"w) with Gator Grip at center rear of body even with top of body to provide additional top deck area. Step to have square ends left and right and 1" lip extending up. Available on SideStacker style bodies only.	$724
3330-0207	Hansen blue LED body hand rails upgrade package (includes pump module if applicable).	$1,292
3330-0209	Slide-out platform, rollerless. Includes chrome grab handle centered on the front face of the platform (includes hand rail as applicable). Located below tailboard centered and the step area the same width as the access ladder.	$1,289
3330-0210	Handrail 12". Install 12" handrails on the upper flat section above the speedlays for easier access to the top mount pump panel walkway.	$110
3330-0212	(2) Dual lighted LED folding steps. Location: Side by side centered on front pump module access door above walkway to aid pump operator in reaching and operating deck gun from crosswalk area. Includes reinforced 3/16" diamond plate pump access door. Each location requires a minimum of (1) handrail per NFPA.	$334
3330-0215	Step flop down rear 12" wide rung type (PR). Painted Durabak black.	$1,157
3330-0220	Slide-out platform, rollerless. Includes chrome grab handle centered on the front face of the platform (includes hand rail as applicable). Located [#LOC].	$1,289

3330-0229	Diamond plate step (approx. 8"w) with Gator Grip at center rear of body full width even with top of body to provide additional top deck area. Step to have tapered ends left and right with 1" lip extending up. Includes (2) two gussets, one each side inboard of upper rear warning lights. Available on SideStacker style bodies only.	$1,003
3330-0230	Non-folding 8x8 bolt on surface mount CPI step with LED lighting. CPI model# SP2013-1-D Each location requires a minimum of (1) handrail per NFPA.	$148
3330-0231	Slide-out platform, rollerless to be painted Durabak black. Includes chrome grab handle centered on the front face of the platform (includes hand rail as applicable). Located [#LOC]..	$3,222
3330-0232	Step below side intake / discharge panel (PR) to be painted Durabak black.. Smmoth plate. Each location requires a minimum of (1) handrail / handhold per NFPA. eMAX only.	$1,238
3340-0003	Cast Products recessed fuel fill with door.	$126
3340-0015	Diamond plate single axle wheel well. Includes bolt-on composite wheel well liners and aluminum trim fenderettes.	$1,092
3340-0027	Diamond plate corner guards for the driver and officer front compartment face. Guards to wrap around the corner and be full height of side assembly or to a max of 96".	$204
3340-0034	The hinged door(s) of [#LOC] to have door louvers for additional ventalation.	$157
3340-0035	Divider Long. To run full length of hose bed (front to rear).	$482
3340-0036	Body compartment interiors to have a swirled finish. Includes pan or hinged door as applicable.	$2,053
3340-0041	Removable number plate with mounting brackets. Locate [#LOC]. Plate to be painted job color. Lettering and/or graphics not included.	$265
3340-0051	Reinforce flooring of compartment [#LOC] for storage of heavy equipment.	$316
3340-0052	Stainless steel trim on bottom edge of compartment opening of [#LOC].	$120
3340-0055	Cast Products recessed fuel fills with doors for dual fuel fill application.	$432
3340-0059	Recessed fuel fills for dual fuel fill application, (1) each side in rear wheel wells.	$246
3340-0061	The walls of compartment [#LOC] to have additional louvers for additional ventilation.	$81
3340-0062	Divider medium. To run full length of hose bed (front to rear) behind single fill tower.	$432
3340-0067	Turtle Tile Brand [#COL] Floor Matting covering all applicable Compartment Floors, Shelves, and Rollout Trays.	$1,043
3340-0077	Body compartment Interiors to have Zolatone gray finish. To include pan of hinged doors and tool compartments (as applicable). Does not include floors if they are dia plt.	$5,138
3340-0078	Body compartment Interiors and compartment mounted components (shelves, trays, toolboards,etc.) to have Zolatone gray finish. To include pan of hinged doors, and tool compartments (as applicable). Does not include floors if they are dia plt.	$10,900
3340-0088	Smooth plate single axle wheel well painted job color. Includes bolt-on composite wheel well liners.	$1,582
3340-0089	Turtle Tile Brand [#COL] Floor Matting covering all applicable Compartment Floors, Shelves, and Rollout Trays.	$1,682
3340-0090	Turtle Tile Brand [#COL] Floor Matting covering all applicable Compartment Floors, Shelves, and Rollout Trays.	$2,291
3340-0093	Mud flaps, rear, black with E-ONE logo.	$159
3340-0102	Angled (Boston style) style tailboard corners.	$434
3340-0107	Diamond plate tandem axle wheel well. Includes bolt-on composite wheel well liners and fenderettes.	$2,179
3340-0108	Smooth plate tandem axle wheel well painted job color. Includes bolt-on composite wheel well liners and fenderettes.	$3,159
3340-0109	Power vent system located in [#LOC]. Includes timer and is run from shorepower inlet.	$189
3340-0111	Horizontal ladder bracket. Location and type of ladder: [#LOC].	$252
3340-0125	Recess mounting for directional light bar. Located on rear area of body.	$390
3340-0132	Diamond plate single axle wheel well. Includes fenderettes and bolt-on aluminum wheel well liners painted job color.	$2,179
3340-0141	Label package for Memphis units only, to include labeling of removable panels to indicate what is behind.	$96
3340-0147	Louver Guards. All lower body compartment louvers to have protective guard provided on exterior of compartments. Guards to prevent road spray from entering compartments.	$523
3340-0150	Dri-Dek brand [#COL] floor matting covering all applicable compartment floors, shelves, and rollout trays.	$974
3340-0151	Dri-Dek Brand [#COL] floor matting covering all applicable body compartment floors, shelves, and rollout trays.	$1,612
3340-0152	Dri-Dek brand [#COL] floor matting covering all applicable compartment floors, shelves, and rollout trays.	$2,221
3340-0154	Mud flaps, rear, black with no logo.	$159
3340-0158	Underbody splash guard behind rear axle mounted to body.	$515
3340-0166	Bolt-in partition wall. Locate in [#LOC].	$213
3340-0174	Stokes basket storage compartment. Locate in [#LOC] with a strap(s) to hold basket in rack.	$713
3340-0176	Swirl plate single axle wheel well with clear coat finish. Includes bolt-on composite wheel well liners.	$1,678
3340-0187	Sign "Stay Back 150 Metres" with black reflective lettering. Locate below rear of body.	$130
3340-0200	Removable slat flooring. Location: [#LOC]	$262
3340-0203	Bracket Hooligan tool mount [#LOC]	$157
3340-0207	Piping cover to be located in compartment [#LOC]. Includes compartment wall cut-outs for piping.	$443
3340-0215	Divider Long. To run full length of hosebed (front to rear). Divider height to half of hosbed depth (top to bottom). For use with low hosebed configurations only.	$482
3340-0218	Sign "Stay Back 500FT". White plate with red reflective lettering. Locate low on rear of body / body doors.	$130

3340-0220	Body compartment Interiors to have Zolatone black finish. To include pan of hinged doors (as applicable). Does not include floors if they are dia plt.	$5,138
3340-0239	Recessed fuel fills for dual fuel fill applications. Fills located (1) each side top rear of tractor body.	$246
3340-0249	Stokes basket storage on forward top of body officer side.	$491
3340-0258	A deflector shield will be placed in front of the light tower or A/C system. Deflector will be in front of the forward most component.	$910
3340-0264	License plate sized number plate. Locate in license plate bracket(s). Plate to be painted job color. Lettering and/or graphics not included.	$206
3340-0267	Stokes/backboard storage rack. Stokes rack for 8"W x 24"H x 84"L basket with backboard sleeves for (2) backboards 2.5"W x 18"H x 84"L forward of rack. Includes restraining strap for stokes and backboards on each side. Location: L1/R1 transverse rear wall.	$925
3340-0269	Diamond plate tandem axle wheel well. Includes bolt-on alum wheel well liners (un-painted) and fenderettes.	$2,693
3340-0272	Sign "Stay Back 500FT" with black reflective lettering. Locate B1 door above D-ring.	$130
3340-0277	Pass through in compartment ceiling for cord reel cable / hyd hose. For use with compts that have a ceiling spaced away from compt top. Loc: [#LOC]	$833
3340-0278	Diamond plate tandem axle wheel well. Includes bolt-on painted job color alum wheel well liners and fenderettes.	$3,141
3340-0281	Backboard storage compartment for (2) boards. [#LOC]. Includes retaining strap for boards.	$664
3340-0283	Horizontal ladder bracket. Location and type of ladder: [#LOC].	$252
3340-0287	Lip 2" high along lower compartment door opening just inside door. Loc: [#LOC].	$142
3340-0289	Stokes basket storage on forward top of body driver side for storage of a CMC Rescue-CMC Pro Series Model #726112-T1 stokes basket.	$491
3340-0309	Sign "Keep Back 300FT". White plate with red reflective lettering. Locate on rear ladder access door.	$130
3340-0337	Hosebed divider with 45 degree offset to store customer required hose load. Rear section of divider approx. 94.5" to rear of offset and forward section of divider approx. 102.5" ahead of offset. HP75/78 only.	$711
3340-0358	Backboard storage sleeve for (1) board. 4"H x 20"W x 76"L. Includes (2) retaining straps, (1) each side for boards. Location: Horizontally mounted through L3/B1/R3.	$664
3340-0374	Sign "Stay Back 300FT" with black reflective lettering. Locate below rear of body.	$130
3340-0376	Diamond plate single axle wheel well. Includes fenderettes and bolt-on aluminum wheel well liners sanded finish.	$1,971
3340-0388	Brushed stainless steel rubrails for the sides of the body below the lower side compartments.	$734
3340-0392	Underbody full width mudflap behind rear axle (as applicable) mounted to body.	$607
3340-0396	A deflector shield will be placed in front of the light tower or A/C system. Deflector will be in front of the forward most component. Deflector will be painted [#COL].	$1,133
3340-0400	Backboard storage compartment for (2) boards in transverse. Location: [#LOC]. Includes retaining straps on both sides for boards.	$664
3340-0405	Sign, "STAY BACK 500 FEET" with black reflective lettering. Locate below rear of body.	$130
3340-0406	Sign "Stay Back 150 Metres" with black reflective lettering. Locate below rear of body.	$130
3340-0413	Wheel Chocks 44" NFPA Complaint - Pair of Zico SAC-44. Up to 44" diameter Tires. Includes mounting bracket. Locate [#LOC].	$631
3340-0464	Rubrail spaced .50" away from body IPOS.	$219
3340-0471	Hosebed partition. Locate at rear of hosebed, approx 9.25" from left side wall, extend 86" forward and taper at 45 degrees to left hosebed side wall. Partition to be .25" al plt with sanded finish.	$634
3340-0474	Body, Cab and Aerial Tags in French to replace standard English E-One supplied Tags. Includes pump panel and multiplex display if applicable.	$1,482
3340-0476	Stainless steel tandem axle rear fender panels painted job color. Includes bolt-on stainless steel wheel well liners (not painted) and polished stainless steel outer fenderettes.	$2,077
3340-0478	Insulation shall be installed behind and / or below the body to protect the compartment(s) from excessive exhaust system heat.	$894
3340-0486	Diamond plate single axle wheel well. Includes bolt-on composite wheel well liners and bolt-on polished alum fenderettes.	$990
3340-0487	Backboard storage sleeve. Locate in ladder tunnel between PEL-24 and PRL-14. Sleeve to be approx 4"W x 19.625"H x 74"L.	$404
3340-0488	Divider long for use with hosebed preconnect. Divider to be set back and/or notched at forward area of hosebed for access to preconnect line connection.	$482
3340-0490	Sign "Stay Back 15 Meters" with black reflective lettering. Locate below rear of body.	$130
3340-0493	Sign "Keep Back 150M". White plate with red reflective lettering. Locate on rear ladder access doors.	$130
3340-0495	Fabricate and install a storz hose holder including Zico coupling mount (CM 3.0/4.0) for 4" hose at rear of body on officers side below pike pole storage. Fabricated from .125" alumimum diamond plate.	$537
3340-0496	Louver Guards. All body compartment louvers to have protective guard provided on exterior of compartments. Guards to prevent road spray from entering compartments.	$523
3340-0497	Storage bin with (4) cells each approx. 9"w x 9"h, for square configuration. Located in L3 floor mounted offset rearward.	$417
3340-0498	Storage bin approx. 24"w x 8"h. Located in R3 suspended from ceiling offset rearward.	$312
3340-0521	All body and pump module compartments (if applicable) and/or storage areas to have no louvers or vents.	$260
3340-0522	Vehicle number sign plate (painted job color) bolted on top of compartment top over R1.	$134
3340-0530	Removable number plate with mounting brackets. Locate [#LOC]. Plate to be painted job color. Plate to be 12"W x 8"H. Lettering and/or graphics not included.	$252

3340-0601	Backboard storage compartment for (2) boards in transverse. Location: [#LOC]. Includes retaining straps on both sides for boards.	$664
3340-0606	Diamond plate partition on inboard side of hydraulic generator in open storage area.	$341
3340-0614	[#COL] edge trim for floor mounted Turtle Tile matting. Locate on door opening side only. Requires seperate floor matting option.	$367
3340-0628	Entire top of body's diamond plate panels to be sand blasted to remove shine.	$669
3340-0636	Fill Tower support bracket to be held 1/4" back from fill tower and attached to front hosebed wall.	$114
3340-0637	Cover plates around rear frame mounted tow eyes in B1 compartment.	$114
3340-0640	Bolt-in partition walls located as follows in hose bed, (1) one partition side to side to rear of fill towers and (2) partitions located one each side to inside of each tower for additional storage space between fill towers.	$675
3340-0643	Stainless steel trim for lower edge of rear mudflap (PR). The trim shall be 2" in height and go full width of the mudflap. The material shall be "polished" stainless steel and it will be mounted to the lower edge of the rear (back side) of the mudflaps.	$306
3340-0652	Stainless steel trim for lower edge of front mudflap (PR). The trim shall be 2" in height and go full width of the mudflap. The material shall be "polished" stainless steel and it will be mounted to the lower edge of the rear (back side) of the mudflaps.	$306
3340-0653	Diamond plate tandem axle wheel well. Includes bolt-on composite wheel well liners and bolt-on polished alum fenderettes.	$1,977
3340-0657	Trim between the body front and the cab. One (1) each side to close out the majority of the gap between the body and cab, The trim pieces shall be smooth aluminum plate painted job color and will be bolted in place to the body.	$409
3340-0660	Insulation to protect compartment from exhaust system heat. Locate in R2 lower back wall.	$894
3340-0661	Vehicle number sign plate (un-painted smooth plate) bolted on top of storage box over R1. Approx. size 16" x 24".	$126
3340-0662	Recessed fuel fill with flat latching stainless steel door. Door style to match SCBA doors.	$266
3340-0676	Hosebed divider with 45 degree offset to store customer required hose load. Locate on driver side of hosebed, to store 400' of 2.5" DJ hose.	$810
3340-0677	Stokes basket storage on forward top of body [#LOC].	$491
3340-0688	The driver & officer side upper body to be flush painted smooth plate body panels. Includes rear facing to rear of extended high side body panels and side facing over L3 & R3 body panels. These areas are to be painted job color.	$858
3340-0689	Insulation to protect compartment from exhaust system heat. Locate behind R1 forward wall.	$523
3340-0691	Drop down fuel fill door and panel below on side of body to rear of driver and officer side tandem wheel well to be smooth plate painted job color.	$327
3340-0697	Power vent system located in [#LOC]. Wired through receptacle in compartment.	$189
3340-0698	Body compartment floors to be 3/16" aluminum smooth plate.	$656
3340-0713	Diamond plate deflector shield for Light Tower. Deflector to be mounted on driver side compartment top at front of body. See photos on file.	$391
3340-0714	Bolt-in floor [#LOC]. Floor is in addition to the existing DP floor. Floor to have 2" raised forward area (tapered towards rear for securing cribbing) and run full length front to rear.	$216
3340-0730	Smooth plate corner guards for the driver and officer front and rear compartment faces. Guards to wrap around the corner and be full height of side assembly or to a max of 96". Corner guards to be painted black durabak.	$877
3340-0731	Access panels thru B1 interior officer side and into rear of R4. Service access rear of fill station controls. Access panel to be sized as large as possible to accommodate sevice operations.	$449
3340-0735	The [#LOC] compartment to have .187" smooth plate floor IPO diamond plate.	$173
3340-0740	Divider shroud for cab tilt pump, bolt in R1.	$179
3340-0747	Compartment heater as high as possible on forward wall. Includes switch on driver overhead. Location: [#LOC].	$1,170
3340-0774	Body wheelwell compartments (2) centered above tandem approx 24" W x 6" H x 26" D with drop down doors. Door material to match wheelwell finish.	$745
3340-0778	Wheel well liner extensions for inboard side of rear wheel well liners (PR).	$323
3340-0785	There shall be no visible diamond plate on the body exterior.	$299
3340-0790	Swing arm bracket with smooth plate box for TAL65 lightbar mounted on square extrusion. Swing arm to be mounted at rear of hosebed, with pivot tower and (2) locking towers to be provided.	$693
3340-0800	Notched hosebed divider(s). Notch to be in center approximately 32" up from floor and angle up 45 degrees at each end. See photo on file.	$405
3340-0841	Sign plate smooth 30" x 30" mounted centered on body roof. Color: [#COL].	$229
3340-0861	Reinforce flooring of compartment LTC and RTC for storage of heavy equipment.	$485
3340-0862	Stainless steel trim on bottom edge of compartment opening of [#LOC]. Includes full height of exterior extrusion.	$150
3340-0864	Diamond plate single axle wheel well. Includes bolt-on composite wheel well liners and sanded aluminum trim fenderettes.	$885
3340-0868	Fire Shopp recessed fuel fills for dual fuel fill applications. Includes brushed finish S/S doors with positive latch.	$566
3340-0869	Divider long. To run full length of hosebed from front of hosebed to rear of hose chute on driver side of hosebed/chute. Divider shall also be set back and/or notched at forward area of hosebed for access to preconnect line connection. Can be mulitiple pieces due to overall length if needed.	$578
3340-0870	Stainless steel trim on bottom edge and covering entire surface of extrusion below compartment opening of [#LOC].	$180
3340-0874	Reinforced hinged .188" embossed diamond plate lid for dunnage pan. Includes two (2) D-Ring latches, stainless steel hinge along forward edge and gas shock hold open. Lid to be reinforced with welded on structure on underside to allow for lid to be a walking surface.	$658

3340-0880	Brushed stainless steel scuff plates for all body handrails.	$458
3340-0893	Hosebed divider with 45 degree offset to store customer required hose load. Locate on driver side of hosebed, to store 250' of 3" DJ hose.	$810
3340-0894	Smooth plate single axle wheel well painted job color. Includes bolt-on composite wheel well liners and bolt-on polished alum fenderettes. Wheel well plates to be flush mounted.	$2,976
3340-0895	Smooth plate tandem axle wheel well painted job color. Includes bolt-on composite wheel well liners and bolt-on polished alum fenderettes. Wheel well plates to be flush mounted.	$4,845
3340-0901	(3) Removable number plates with mounting brackets. Locate (1) each side of cab rearward of driver and officer doors, (1) driver side rear compartment face above taillights. Plates to be 5.25" tall X 5" wide and painted job color. Lettering and/or graphics not included.	$795
3340-0909	Divider Long Fixed. To run full length of hose bed (front to rear) positioned fixed as close to center of hosebed ROM roll up door drum center as hose loading permits..	$568
3340-0918	Wheel Chocks Alum HGS Heavy Includes Brackets. Locate below compartment ahead of Drivers side rear wheels.	$513
3340-0924	Aluminum angle 2"x2" bolt on light guard to protect ROM light fixture and roll-up door track from damage for L4 rearward light only. (1) 18" piece at top and (1) 18" piece at the bottom bolted to the rear wall.	$110
3340-0929	Smooth plate tandem axle wheel well painted job color. Includes bolt-on composite wheel well liners and fenderettes painted Durabak black.	$3,740
3340-0938	Provide access with covers on forward wall of compartment R3 to access to upper KLAMP-IT hardware for DOT storage bottles located in R2.	$178
3340-0950	Rubrail for the body (serrated surface facing down).	$546
3340-0958	Backboard storage sleeve for (2) boards individually stored one on top of the other. Each area to be 3"W x 17"H x 72"L. Includes (1) retaining strap on the driver side. Location: Vertically mounted in L1 and into R1 (no access this side) inboard of the vertical exhaust.	$664
3340-0975	Smooth plate painted tandem axle wheel well. Includes bolt-on composite wheel well liners and bolt-on polished alum fenderettes.	$2,997
3340-0983	All body and pump module compartments (if applicable) and/or storage areas (EXCEPT R1 compartment) to have no louvers or vents. Louvers or vents for compartment R1 are to located up high only.	$260
3350-0000	Hydraulic hose reel for use with Hurst brand tools. Includes 100' 1/4" hose (up to 5,000 PSI) and rollers (captive type). Location: [#LOC]. Hose Color: [#COL].	$2,372
3350-0001	Air Reel w/electric rewind. 12V with 100' .25" hose plumbed to the truck air system (unless otherwise specified). Location: [#LOC].	$2,608
3350-0004	Low Pressure Utility Air Hose Reel assembly with 250' low pressure air hose and mini panel. Locate in [#LOC].	$2,503
3350-0009	Hydraulic hose reel for use with TNT brand tools. Includes 100' 1/4" hose (up to 10,500 PSI) and rollers (captive type). Location: [#LOC]. Hose Color [#COL].	$4,766
3350-0010	Hydraulic hose reel for use with Phoenix brand tools. Includes 100' 1/4" hose (up to 5,000 PSI) and rollers (captive type). Location: [#LOC]. Hose Color [#COL].	$2,372
3350-0011	Hydraulic hose reel for use with Code 3 brand tools. Includes 100' 1/4" hose (up to 5,000 PSI) and rollers (captive type). Location: [#LOC]. Hose Color [#COL].	$2,372
3350-0012	Hydraulic hose reel for use with Amkus brand tools. Includes 100' 1/4" hose (up to 10,500 PSI) and rollers (captive type). Location: [#LOC]. Hose Color: [#COL].	$4,766
3350-0013	Hydraulic hose reel for use with Hurst Centaur brand tools. Includes 100' 1/4" hose (up to 10,000 PSI) and rollers (captive type). Location: [#LOC]. Hose Color [#COL].	$4,766
3350-0014	Hydraulic hose reel for use with Genesis brand tools. Includes 100' 1/4" hose (up to 10,000 PSI) and rollers (captive type). Location: [#LOC]. Hose Color [#COL].	$4,766
3350-0015	Hydraulic hose reel for use with Holmatro brand tools. Includes 100' 1/4" hose (up to 10,000 PSI) and rollers (captive type). Location: [#LOC]. Hose Color [#COL].	$4,766
3350-0016	12' Lead/Supply Line for high pressure hydraulic reel. To be used with 10,000 PSI hyd reels. Locate on reel in [#LOC].	$811
3350-0017	30' Lead/Supply Line for high pressure hydraulic reel. To be used with 10,500 PSI hyd reels. Locate [#LOC].	$1,206
3350-0018	12' Lead/Supply Line for low pressure hydraulic reel. To be used with 5,000 PSI hyd reels. Locate [#LOC].	$650
3350-0019	30' Lead/Supply Line for low pressure hydraulic reel. To be used with 5,000 PSI hyd reels. Locate [#LOC].	$1,021
3350-0025	Hydraulic hose reel for use with TNT brand tools. Includes 100' 1/4" synthetic rubber hose (up to 10,500 PSI) and rollers (captive type). Location: [#LOC]. Hose Color [#COL].	$4,766
3350-0026	Hydraulic hose reel for use with Amkus brand tools. Includes 100' 1/4" rubber hose (up to 10,500 PSI) and rollers (captive type). Location: [#LOC]. Hose Color: [#COL].	$4,766
3350-0029	Route hydraulic lead line(s) to [#LOC].	$96
3350-0030	Low pressure utility air hose reel w/spring rewind. Includes 50' 3/8" low pressure air hose, rollers, ball stop and and shut-off valve accessible from ground. Loc: [#LOC].	$1,313
3350-0032	Akron utility air hose reel. Includes 200' 3/8" hose and reel mounted rollers (captive type). Loc: [#LOC].	$1,395
3350-0033	Akron hydraulic hose reel for use with Hurst brand tools. Includes 100' 1/4" hose (up to 5,000 PSI) and rollers (captive type). Location: [#LOC]. Hose Color: [#COL].	$2,205
3350-0034	Hydraulic hose reel for use with Holmatro Core Technology tools. Reel model EF2220-17-18 w/ 100' of CORE hydraulic hose and a 30' CORE Holmatro pigtail. Location: [#LOC]. Hose Color [#COL].	$7,550
3350-0036	Hydraulic hose reel for use with Hurst Centaur brand tools. Includes 150' 1/4" hose (up to 10,000 PSI) and rollers (captive type). Location [#LOC]. Hose Color [#COL].	$5,802

3350-0040	12' Lead/Supply Line for high pressure hydraulic reel. To be used with 10,500 PSI hyd reels. Locate on reel in [#LOC].	$852
3350-0041	30' Lead/Supply Line for high pressure hydraulic reel. To be used with 10,500 PSI hyd reels. Locate [#LOC].	$1,266
3350-0043	Akron hydraulic hose reel for use with Amkus brand tools. Includes 100' 1/4" hose (up to 10,500 PSI) and rollers (captive type). Location: [#LOC]. Hose Color: [#COL].	$3,402
3350-0045	Akron reel to be powder painted custom color. Requires approval from vendor on color. Location: [#LOC]. Reel Color: [#COL].	$120
3350-0046	8' Lead/Supply Line for high pressure hydraulic reel. To be used with hyrdraulic reels between 10,000 to 10,500 PSI. Locate: [#LOC].	$395
3350-0048	Low Pressure Utility Air Hose Reel assembly with 250' low pressure air hose. Locate in [#LOC].	$1,880
3350-0052	6' Lead/Supply Line for high pressure hydraulic reel. To be used with 10,000 PSI hyd reels. Locate on reel in [#LOC].	$780
3350-0059	6' Lead/Supply Line for Holmatro Core hydraulic reel. To be used with Holmatro Core hyd reels. Locate on reel in [#LOC].	$998
3350-0060	Hydraulic hose reel for use with Holmatro Core Technology tools. Reel model EF2220-17-18 w/ 100' of CORE hydraulic hose. Location: [#LOC]. Hose Color [#COL].	$5,708
3350-0062	Hydraulic hose reel for use with Hurst brand tools. Includes rollers (captive type). Does not include hydraulic hose. Location: [#LOC].	$1,821
3350-0064	Air reel w/electric rewind 100' of .375" hose plumbed to the cascade system for low pressure utility air. Includes 100' 3/8" low pressure air hose, rollers and ball stop (controls for reel included with breathing air system). Location: L3 suspended below fixed shelf offset rearward next to breathing air fill station.	$1,880
3350-0066	16' Lead/Supply Line for low pressure hydraulic reel. To be used with 5,000 PSI hyd reels. Locate [#LOC].	$689
3350-0068	A lead line #8, 5,000 psi hydraulic hose line routed from IHT manifold to B2 lower rear wall.	$464
3350-0069	Hydraulic tool ports with TNT RV-120 remote actuation vlv. Quick connect fittings on vlv to be for Phoenix brand tools. vlv with tool fittings to be located on officer side of front bumper. Includes hyd supply lines run to B1.	$1,827
3350-0072	A lead line 5,000 psi hydraulic line routed from B2 lower forward wall to dunnage pan located MAS heat exchanger	$663
3350-0073	A return lead line 5,000 psi hydraulic line routed from B2 lower forward wall to dunnage pan located generator	$663
3350-0075	Remote actuation vlv for hyd tool reels. Includes TNT RV-ATT vlv and hyd supply lines run to front bumper. Vlv to be located low on back wall of center frt bumper tray with inlet lines running through back wall. Lines between RV-ATT vlv and reel to have quick connect fittings.	$3,450
3350-0077	Hydraulic hose reel for use with Amkus brand tools. Includes 150' 1/4" hose (up to 10,500 PSI) and rollers (captive type). Location: [#LOC]. Hose Color: [#COL].	$5,004
3350-0078	Hydraulic reels to be mounted in aluminum tray with a cutout for roller assembly. A 1" lip around roller tray assembly to contain any fluids that may leak from hyd reel. Location [#LOC].	$385
3350-0083	Hydraulic hose reel for use with Amkus brand tools. Includes rollers (captive type). Does not include hydraulic hose. Location: [#LOC].	$2,107
3350-0084	16' Lead/Supply Line for high pressure hydraulic reel. To be used with 10,500 PSI hyd reels, lines are red and black in color. Compatible with Amkus tool brand. Locate on reel in [#LOC].	$998
3350-0085	16' Lead/Supply Line for high pressure hydraulic reel. To be used with 10,500 PSI hyd reels, lines are yellow and black in color. Compatible with Amkus tool brand. Locate on reel in [#LOC].	$998
3350-0088	40' Lead/Supply Line for high pressure hydraulic reel. To be used with 10,500 PSI hyd reels. Locate: [#LOC].	$1,608
3350-0089	CMW model 6011-W3-H1 dual reel, low pressure working air and hydraulic hose reel combo. Includes 100' of 300 PSI blue air hose and 100' of 10,500 PSI red/black hydraulic hose, compatible with Amkus tools. Located on ceiling of compartment B1 offset to officer side.	$6,321
3350-0090	CMW model 6011 dual hydraulic hose reel for use with 10,500 PSI Amkus tools. Reel SHALL NOT be supplied with hose or ball stops. Located on ceiling of compartment B1 offset to driver side.	$4,432
3350-0091	15' Lead/Supply Line for high pressure hydraulic reel. To be used with 10,500 PSI hyd reels. Locate on reel in [#LOC].	$932
3350-0092	Hydraulic hose reel for use with Holmatro brand tools. Includes 60' of Core Technology hose installed (up to 10,000 PSI) and rollers (captive type). Location: [#LOC]. Hose Color: [#COL].	$4,533
3350-0095	Remote actuation vlv for hyd tool reels. Includes TNT RV-ATT vlv and hyd supply lines run to front bumper. Vlv to be located low on back wall of center frt bumper tray with inlet lines running through back wall. Lines between RV-ATT vlv and reel to have quick connect fittings.	$3,450
3350-0098	45' Lead/Supply Line for low pressure hydraulic reel. To be used with 5,000 PSI hyd reels. Locate [#LOC].	$1,417
3350-0099	Hydraulic hose reel for use with Holmatro Core Technology tools. Reel model EF2220-17-18 w/ 80' of CORE hydraulic hose. Location: [#LOC]. Hose Color [#COL].	$5,066
3350-0100	31' to 40' Core Technology Lead/Supply Line for high pressure hydraulic reel. To be used with 10,000 PSI hyd reels. Locate on reel in [#LOC].	$1,670
3350-0101	Up to 10' Core Technology Lead/Supply Line for high pressure hydraulic reel. To be used with 10,000 PSI hyd reels. Locate on reel in [#LOC].	$1,134
3350-0102	Hydraulic reel rewind switch. Switch located [#LOC].	$113
3350-0104	8' Lead/Supply Line for high pressure hydraulic reel. To be used with 10,500 PSI hyd reels. Locate on reel in [#LOC].	$768
3350-0108	CMW model 6011 dual hydraulic hose reels for use with 5,000 PSI tools shall be provided and installed. Includes two (2) sets of 100' 1/4" twinline hose (up to 5,000 PSI), hose guides and ball stops. Includes (2) 30' lead/supply lines. Location: [#LOC]. Hose Color: [#COL].	$11,553

3350-0111	Bulk Head Fittings, including (2) 3' Pig Tails. Locate R3 back wall offset forward and 10" off compartment floor.	$791
3350-0119	Akron utility air hose reel. Capacity for 200' 3/8" hose (hose not included) and reel mounted rollers (captive type). Loc: L3 forward.	$1,155
3365-0011	Floor mounted roll-out tray. Includes 250lbs. tray capacity. Mount on [#LOC] floor.	$642
3365-0013	Center mounted ladder tunnel. Ladder rack to hold: [#LOC].	$5,033
3365-0014	Dual ladder tunnel for HP75 / HP78 SideStacker. Ladder rack to hold: [#LOC].	$5,033
3365-0015	Dual ladder tunnel for HP75 / HP78. Ladder rack to hold: [#LOC]	$5,033
3365-0016	Box type enclosure for forward end of ladder tunnel. Required on center HB HP75 / HP78 with ladder tunnel doors.	$428
3365-0028	Hard Suction Storage Rack. Driver side compartment top. Includes spring hold downs and scuff plates behind spring mounts (as applicable).	$365
3365-0035	Hard Suction Storage Rack. Officer side compartment top. Includes spring hold downs and scuff plates behind spring mounts (as applicable).	$365
3365-0036	Center mounted ladder tunnel. Ladder rack to hold: [#LOC]	$5,033
3365-0037	Center mounted ladder tunnel. Ladder rack to hold: [#LOC].	$5,033
3365-0039	Center mounted ladder tunnel. Ladder rack to hold: [#LOC]	$5,033
3365-0074	SCBA/Fire Extinguisher storage rack. Locate in [#LOC]. To hold (6) bottles- (3) wide/(2)high. Bottles to be stored angled upward in the compartment. The bottom and sides are to include ribbed rubber inserts.	$494
3365-0076	Center mounted ladder tunnel. Ladder rack to hold: [#LOC].	$5,033
3365-0084	Vertical ladder brackets (3) with adjustable tracks. Locate on officer's side of body to hold PEL-28, PRL-14, and CJL-14 ladders.	$981
3365-0117	Storage rack (4) 8" x 64" aluminum tubes. Locate ceiling mtd in L1/R1 transverse compartment centered side to side offset to front.	$1,086
3365-0119	Horizontal ladder brackets right side of body in recessed storage area above half side compartments. Brackets to hold from top to bottom: [#LOC].	$2,063
3365-0127	Storage box in ladder tunnel for tripod 10 wide x 10 high x 106 long.	$977
3365-0132	Fire extinguisher storage rack to hold (3) extinguishers in a single horz row. Bottom and sides to include ribbed rubber inserts. Each opening to have a vertically mounted strap. Locate floor mtd in [#LOC].	$647
3365-0144	Horizontal ladder brackets left side of body in recessed storage area above half side compartments. Brackets to hold from top to bottom: [#LOC].	$2,063
3365-0145	Nylon scuff pads for vert uprights of rear ladder rack. Approx 1/16 thick self-stick material located on each side of extension ladders.	$108
3365-0146	Pike pole storage tube aluminum 16' with capped end. Locate in ladder tunnel.	$215
3365-0147	Backboard and Little Giant storage rack. Backboard sleeve approx 4"H x 20"W x 70"L with open ends located in trans compt over pump ceiling mtd offset to frt. Little Giant sleeve for a Model 17 approx 7"H x 25.5" W x 56" L open on left side only and located below backboard sleeve.	$1,088
3365-0167	Dual ladder tunnel for HP75 / HP78 SideStacker with tall R1 compartment. Ladder rack to hold: [#LOC].	$5,033
3365-0215	Double Hard Suction Storage Rack to store 6"x 6' hard suction hoses. (1) set Driver side compartment top offset forward and (1) set matching on Officer side atop diamond plate hosebed cover. Includes spring hold downs with scuff plates (as applicable).	$644
3365-0248	(2) Pike pole storage tubes to store (2) Fire Hooks Unlimited 16' Boston Rake Hooks. Locate in ladder tunnel recessed forward to allow ladder tunnel door to close.	$428
3365-0282	Hard suction storage box. Located in the officer side hose bed. Includes drop down door with finish to match rear of body, latch(s) shall be provided to secure the door in the closed position ((wired to door ajar), hose bed style top, nylatron flooring and hosebed divider extending to top of hose bed for inboard side. Box to hold (1)6" x 10' hard suction hose w/rocker lugs. Approximate size of opening 9.5"w x 8"h.	$1,243
3365-0296	Rubber flaps to enclose ladder tunnel between body sections at boom support (sides, top and bottom). HP95 Mid-mount only.	$441
3365-0319	Hard Suction Storage Rack. Driver side compartment top. Includes spring hold downs and scuff plates behind spring mounts (as applicable).	$365
3365-0321	Horizontal ladder bracket, Includes .187" smooth aluminum boot painted black durabak with ladder hold down. Location and type of ladder: [#LOC].	$301
3365-0334	Ladder Storage Box. Located in the officer side hosebed. The top shall be enclosed using the hosebed cover, the rear access shall be included in the vinyl rear flap as part of the hose bed cover (hinged door not included), The hosebed cover and rear flap shall be sold separately. Box to hold (1) Alcolite PEL 24' 3-section, (1) Alcolite PRL 12' roof, (1) Alcolite FL 10' attic ladder, (2) backboards and (2) pike poles.	$2,665
3365-0335	Miscellaneous storage in hosebed above the ladder tunnel. Upper area open and main hosebed cover to be used to cover top area of the storage area. There is to be a bolted end plate at the rear of the storage area, horizontal adjustable tracks 60" from the rear mounted forward with a divider.	$352
3365-0351	Box type enclosure shall be provided for Little Giant "Classic" Model 17 ladder. Box shall be mounted rearward on bi-directional tray. The box shall be approximately 58" long X 28" high X 8.63" wide. The box ends (left and right) shall be left open, Straps shall be provided on each end to secure the ladder in place. WOP aerial body only.	$709
3365-0355	Hard suction Storage Box located in the drivers side roof top compartment. The storage to be boxed off inside roof top compartment. Includes vertical hinged smooth plate door (wired to door ajar) w/push-button latch. Storage to hold [#LOC] 6" x 10' hard suction hoses.	$1,986

3365-0356	Ladder storage thru tank for (1) 2-section 24' extension, (1) 14' roof, (1) 10' attic with feet and (2) pike poles. Provide retaining straps to hold contents stationary. Reduces selected water tank capacity by approximately 250 gallons for pumpers and 300 gallons for tankers.	$2,818
3365-0377	Fire extinguisher storage rack to hold (3) extinguishers in a single horz row. The rack shall be raised 3" on the open end to allow the extinguishers to slide back into the box at an angle. Bottom and sides to include ribbed rubber inserts. Each opening to have a vertically mounted strap. The rearward opening shall be 15" wide, the middle and forward opening to be 10" wide. The opening shall be 18" high. The top shall be flat and have a 2" lip up for storing items as a permanent shelf. Locate floor mtd in [#LOC].	$647
3365-0378	Ladder Storage Box. Located in the officer side hosebed. The top shall be enclosed using hosebed style top. Includes drop down door (wired to door ajar) W/ D-ring latch. Box to hold (1) Alcolite FEL 24' 2-section, (1) Alcolite FRL 14' roof, (1) Alcolite FL 10' attic ladder and (5) 10' pike poles (NY hooks).	$2,665
3365-0379	Fire extinguisher storage rack to hold (3) extinguishers in a single horz row. Bottom and sides to include ribbed rubber inserts. Each opening to have a vertically mounted strap. The top shall have a 1" lip up for storing items.Locate floor mtd in [#LOC].	$647
3365-0410	Ladder Storage Box. Located in the officer side hosebed. The top shall be enclosed using the hosebed cover, the rear access shall be equipped with an outboard vertical hinged door with thumb latch and moon spring hold open, The hosebed cover and rear flap shall be sold separately. Box to hold (1) Alcolite PEL 24' 3-section, (1) Alcolite PRL 12' roof with separete divider and (1) Model 13 Little Giant	$2,665
3365-0415	Little Giant sleeve for a Classic Model 17 approx 9.25" W x 25.5" H x 56" L for vertical storage in transverse compartment. Includes door to secure the ladder in place with composite flooring. Located just above upper transverse floor centered on forward wall, to be accessible from L1/R1.	$481
3365-0422	Ladder storage through tank for (1) 2-section 24' extension, (1) 14' roof, (1) 10' attic with feet,(2) pike poles, and (2) backboards. Reduces selected water tank capacity by approximately 350 gallons.	$3,190
3365-0429	Hard suction Storage Box located in the driver side roof top compartment. The storage to be boxed off inside roof top compartment. Includes vertical hinged smooth plate door (wired to door ajar) w/push-button latch. Storage to hold (2) 6" X 12' hard suction tubes.	$1,986
3365-0443	Hard suction storage rack for (1) 6" X 8' suction hose. Locate [#LOC]. Includes NFPA retaining strap(s).	$276
3365-0480	Hard suction storage in hosebed for the following: (2) 6" x 10' hard suction hoses. Includes (1) hosebed divider with squared off upper rear, vertically hinged (to swing outboard hosebed area) door with latch (wired to door ajar indicator) and composite material overlay on hosebed flooring. Upper area open and main hosebed cover to be used to cover top area of storage area. Storage located to officer side of hosebed.	$1,082
3365-0509	Double hard suction storage rack (side by side) for 6" x 6' hard suction hoses. Driver side compartment top. Includes spring hold downs with scuff plates (as applicable).	$594
3365-0514	Fire extinguisher storage rack to hold (3) extinguishers in a single horz row. Each storage area to be 11" wide x 11" high x 25" deep with a trough in the bottom (same as used in E-ONE wheelwell bottle storage. Bottom and sides of the trough to include ribbed rubber inserts. Each opening to have a vertically mounted strap. Bolt to the bottom of the adjustable shelf in R1 forward end.	$647
3370-0023	Tracks for adjustable shelf and/or adjustable tray in single depth or rescue style single depth compartment. Location: [#LOC].	$182
3370-0025	Permanent shelf. Locate in [#LOC].	$95
3370-0026	Adjustable shelf. For compartments that are full height/full depth or lower compartments with full depth. Location: [#LOC].	$235
3370-0027	Tracks for adjustable shelf and/or adjustable tray in the lower area of the compartment. Location: [#LOC].	$93
3370-0028	Tracks for adjustable shelf and/or adjustable tray in the upper area of the compartment. Location: [#LOC].	$50
3370-0029	Adjustable shelf. For compartments with upper shallow depth. Location: [#LOC].	$120
3370-0031	Storage system for compartment L1. Includes vertical partition 24" from right side wall, (2) adj. HD tool boards to rear of partition, roll-out tray w/24" 500 lb. slides on floor ahead of partition & fixed shelf at the top of the rear wall offset ahead of partition. HP75 / HP78 SideStacker.	$2,628
3370-0034	Shelf adj full transverse. Locate in [#LOC].	$482
3370-0035	Shelf adjustable 1/2 depth in transverse compartment. Locate in [#LOC].	$384
3370-0036	Shelf adjustable 250 lbs capacity. 2/3 deep in transverse compartment. Locate in [#LOC].	$432
3370-0038	Adjustable shelf. For lower area of compartments with multiple depths. Location: [#LOC].	$235
3370-0039	Adjustable shelf. For upper area of compartments with multiple depths. Location: [#LOC].	$235
3370-0040	Adjustable shelf for single depth or rescue style single depth compartment. Location: [#LOC].	$235
3370-0041	Adjustable shelf full width for transverse compartment (Memphis aerial). Includes 2" lips on each end, (8) 5" holes lengthwise down center of shelf, 8" high bolt-on alum stop close to left side (for stokes entering from right), straps below shelf for 19W x 2H x 73L backboard w/stop on left side for backboard. Location: L1/R1	$1,295
3370-0042	Tracks for adjustable shelf and/or adjustable tray in transverse compartment. Location: L1/R1.	$360
3370-0049	Tracks for adjustable shelf and/or adjustable tray in transverse compartment. Location: L4/R4.	$360
3370-0051	Tracks for adjustable shelf and/or adjustable tray in 1/2 or 2/3rds depth of transverse compartment. Location: [#LOC].	$273
3370-0052	Adjustable shelf (J-Style) for non-transverse compartments 16" or greater in depth. Location: [#LOC].	$235
3370-0053	Adjustable shelf (C-Style) for non-transverse compartments up to 15.99" in depth. Location: [#LOC].	$120
3370-0054	Tracks for adjustable shelf and/or adjustable tray in compartments 16" or greater in depth. Location: [#LOC].	$182
3370-0055	Tracks for adjustable shelf in shallow compartments up to 15.99" deep. Location: [#LOC].	$93

3370-0112	Adjustable shelf tracks to be mounted at Customer's final inspection.	$182
3370-0115	Shelf approx. 46"long L1/R1 transverse compartment. Locate in center of transverse up high.	$384
3370-0116	Tracks for adjustable shelf and/or adjustable tray in transverse compartment. Note two (2) center tracks on forward and rear wall to extend up to within 2" of ceiling and two outer tracks to remain at standard height. Location: L1/R1.	$594
3370-0129	Shelf 1/2 depth in transverse compartment. Rear lip to be 4" high. Locate in [#LOC].	$415
3370-0133	Tracks shall be provided for use with adjustable shelves and/or trays. The tracks shall align for use of a shallow depth adjustable shelf(s) and/or adjustable tray(s). The tracks shall be ran from floor to ceiling to allow the shallow depth adjustable shelf/tray to have full compartment height adjustability. Position tracks within compartment for optimal adjustability. The tracks as installed from floor to ceiling may be impacted by other items located within the compartment; tracks may be cut and continued again as required to provide full height adjustability. The tracks shall be vertically mounted and attached to the side and/or rear walls of the compartments. Location: [#LOC].	$182
3370-0134	Fixed shelf modification for shelf to have 1" lips. Location: [#LOC].	$107
3370-0142	Permanent shelf for Hurst power unit. Locate on forward bulkhead high as possible [#LOC].	$653
3370-0144	Permanent shelf, bolt in, suspended from ceiling and forward in compartment. Locate in [#LOC].	$287
3370-0149	Adjustable shelf. For non-transverse compartments that are 16" or greater in depth. The shelf shall have a minimum 2" front, rear and side lips. Location: [#LOC].	$259
3370-0154	Adjustable shelf with 2" lips around entire shelf. For compartments that are shallow up to 15.99" depth. Location: [#LOC].	$222
3370-0158	Tracks on rear wall of compartment for equipment mounting. Three (3) aluminum adjustable shelf tracks shall be vertical mounted on the rear wall of the L2 compartment over rear wheel. Tracks shall be located forward and rearward offset from compartment walls 4 inches in the compartment and one centered in the compartment. Tracks shall be for mounting customer equipement and shall not have any shelves included.	$152
3370-0161	Stainless steel adjustable shelf. For non-transverse compartments that are 16" or greater in depth. Location: [#LOC].	$282
3370-0162	Stainless steel adjustable shelf. For non-transverse compartments that are up to 15.99" deep. Location: [#LOC].	$144
3370-0167	Mount two (2) pieces of shelf track horizontal from front to back on the back wall for attaching air bottle brackts to. Use old style adjustable track part # 273490. Locate [#LOC].	$213
3370-0169	Permanent shelf. Locate in R8, 36" from the floor to the bottom of the shelf.	$95
3370-0172	Adjustable shelf (J-Style) for non-transverse compartments 16 in. or greater in depth. Shelf to be partial depth and extend from back wall 18in. or as applicable per compartment depth, options. Design to offset attach to standard location adjustable tracks and relief notch as needed to adjust at breaker box or similar compartment mounted options.. Location: [#LOC].	$235
3370-0178	Permanent shelf. Locate in L3, approximately 1/2 depth of compartment, even with bottom of lower 3x3 extrusion at turntable access panel on back wall.	$86
3370-0179	All adjustable and fixed shelves to be extended outboard towards door opening and inboard towards back wall as far as possible. Note outboard corners may require notching for compartment track lighting (if applicable).	$370
3370-0182	Permanent shelf, bolt in and full transverse mounted, located above the upper transverse Speedlay assembly as low as the speedlay plumbing and tray will allow.	$287
3380-0014	Roll-out generator tray. Includes tray interlock. Locate [#LOC].	$764
3380-0015	Fixed back wall mounted toolboard. Toolboard to be spaced off wall a half inch. Location(s): [#LOC].	$212
3380-0017	Floor mounted slide master roll-out/tilt down tray. Single depth. Mount on [#LOC] floor.	$1,075
3380-0018	Adjustable roll-out toolboard. Includes upper and lower adjustable track with 250 lbs. slides and gas shock actuated. Toolboard sized to compartment height and depth as applicable. Location(s): [#LOC].	$790
3380-0019	Running board suction tray. Includes removable slats in bottom of tray. Location(s): [#LOC]	$502
3380-0022	Floor mounted roll-out tray. Includes 500lbs. tray capacity. Location: [#LOC].	$837
3380-0023	Adjustable mounted roll-out/tilt-down tray. Location(s): [#LOC]. For use in single depth or rescue style compartments.	$1,359
3380-0024	Adjustable mounted roll-out tray. Includes 250 lbs tray capacity. Location(s): [#LOC]	$922
3380-0025	Adjustable mounted roll-out tray. Includes 500 lbs tray capacity. Location(s): [#LOC]	$1,119
3380-0027	Floor mounted SlideMaster with tray. Model SM3-SP. Single depth. Mount on [#LOC] floor.	$861
3380-0028	Adjustable mounted Slide Master with tray. Model SM3-SP. Single depth. Location(s): [#LOC]	$1,141
3380-0029	Floor mounted Bi-Directional Slide Master with tray. Model SM2-D-SP. Mounted on [#LOC].	$1,483
3380-0030	Adjustable mounted bi-directional Slide Master with tray. Model SM2-D-SP. Mounted in transverse area of [#LOC].	$1,762
3380-0036	Fixed back wall mounted peg toolboard. Toolboard to be spaced off wall a half inch. Location(s): [#LOC].	$254
3380-0038	Floor mounted roll-out tray with Jonathan Slides. Includes 400lbs. tray capacity. Mount on [#LOC] floor.	$1,463
3380-0039	Adjustable mounted roll-out tray with Jonathan Slides. Includes 400 lbs tray capacity. Location(s): [#LOC]	$1,744
3380-0040	Vertical hinged swing-out tool board. Location: [#LOC]. Hinge along forward compartment wall and position centered between door and back wall. Includes butterfly latch to secure in the closed position that is accessible from the ground.	$1,484
3380-0041	PAC TRAC panels vertical stacked on back wall of compartment. Locate: [#LOC].	$766
3380-0045	Floor mounted Slide Master with tray. Model SM3-SP. 1/2 depth transverse or full depth on non transverse. Mount on [#LOC] floor.	$1,122

3380-0049	Running board suction tray (floating style). Includes tapered 3" front corner and removable slats in bottom of tray. Location(s): [#LOC].	$652
3380-0052	Rollout tool boards (PR). To hold Memphis F.D aerial compliment of Holmatro tools (Bracketry to be dealer installed). Locate against front and rear wall of R1.	$3,574
3380-0055	Floor mounted roll-out/tilt down tray with aluminum frame. Mount on [#LOC] floor.	$1,047
3380-0056	Adjustable mounted roll-out/tilt down tray with aluminum frame. Location(s): [#LOC]. For use in single depth or rescue style compartments.	$1,326
3380-0060	Adjustable tool board with 500 lbs slides. Includes upper and lower adjustable track and gas shock actuated. Tool board sized to compartment height and depth as applicable. Location(s): [#LOC].	$1,085
3380-0061	Compartment underbody. Includes drop down front door with D-ring latches. Locate [#LOC].	$1,468
3380-0062	Adjustable peg tool board. Includes upper and lower adjustable track and gas shock actuated. Tool board sized to compartment height and depth as applicable. Location(s): [#LOC].	$949
3380-0063	Ready Respond Storage cabinet. Includes (5) drawers with gray fronts. No side trim required. Locate floor mounted in [#LOC].	$3,887
3380-0065	Vertical hinged swing-out toolboard. Location: [#LOC]. Hinge along forward compartment wall and position centered between door and back wall. Includes D-Ring latch to secure in the closed position that is accessable from the ground.	$1,484
3380-0068	Floor mounted equally sized roll-out trays (PR). Includes 250lbs. tray capacity. Mount on [#LOC] floor.	$1,279
3380-0069	Adjustable tool board - notched. Includes upper and lower adjustable track and is gas shock actuated. Tool board sized to compartment height and depth as applicable. Upper end to be notched around compartment offset to provide maximum height. Location(s): [#LOC]	$904
3380-0070	(2) Rollout Trays with 500lb slides approx. 27"W x 44"D to be floor mounted, one each side on upper transverse floor offset forward in L1/R1.	$1,155
3380-0071	Tool board on dual direction 1000 lb. SlideMaster. Includes lock-in/lock-out. Tool board sized to compartment height and depth as applicable. Location(s): [#LOC].	$2,126
3380-0074	Tool board HD adjustable. Includes upper and lower adjustable track and is gas shock actuated, return style re-enforcing bends on vertical front and rear edges of tool board, upper and lower adjustable track and gas shock actuated. Tool board sized to compartment height and depth as applicable. Location(s): [#LOC]	$844
3380-0076	Tray, floor mounted roll-out with gas spring. 500 lbs. capacity. Location: [#LOC].	$642
3380-0077	Tray, adjustable roll-out with 500 lbs. capacity and a gas shock. Location(s): [#LOC].	$922
3380-0079	Adjustable heavy duty tool board with 500 lbs. capacity. Includes return style reinforcing bends on vertical front and rear edges of tool board, upper and lower adjustable track and gas shock actuated. Tool board sized to compartment height and depth as applicable. Location(s): [#LOC].	$844
3380-0080	Adjustable heavy duty peg tool board. Includes return style re-enforcing bends on vertical front and rear edges of tool board, upper and lower adjustable track and gas shock actuated. Tool board sized to compartment height and depth as applicable. Location(s): [#LOC]	$1,003
3380-0081	Roll-out generator tray. Includes tray interlock. Locate [#LOC].	$764
3380-0082	Slidemaster frame powder coated black (EA). Location: [#LOC].	$147
3380-0086	Vertical hinged swing-out pegboard toolboard. Location: [#LOC]. Hinge along forward compartment wall and position centered front to rear. Includes D-ring latch to secure in the closed position that is accessible from the ground.	$1,574
3380-0087	Adjustable toolboard with 500 lb. slides for use with deep compartments. Includes upper and lower adjustable track with lock in/lock out latch. Toolboard sized to compartment height and depth as applicable. Location(s): [#LOC].	$1,085
3380-0093	Floor mounted roll-out/tilt down tray. Mount on [#LOC] floor. For use on half transverse trays.	$1,075
3380-0094	Floor mounted roll-out/tilt down tray. Mount on [#LOC] floor. For use on two thirds transverse trays or in the B1above the frame rails.	$1,075
3380-0095	Adjustable mounted roll-out/tilt down tray. Location(s): [#LOC]. For use on 1/2 depth transverse trays or upper deep B1 compartment.	$1,359
3380-0096	Adjustable mounted roll-out/tilt down tray. Location(s): [#LOC]. For use on 2/3 deep transverse trays or B1above the frame rails.	$1,359
3380-0099	Vertical hinged swing-out toolboard. Location: [#LOC]. Hinge along rearward compartment wall and position centered between door and back wall. Includes D-Ring latch to secure in the closed position that is accessable from the ground and a positive hold open device in the open position.	$1,484
3380-0100	SlideMaster slideout tray w/hose tray approx 8.625 wide x 124 long x 16 deep to hold 200' of 5" LDH. Includes handrail at rear top corner of tray and slotted holes in floor for hose ventaltion. Floor mounted at rear of body in ladder tunnel on officer side.	$1,491
3380-0133	On Scene Solutions floor mounted roll-out/tilt down tray mount on [#LOC] floor. This tray shall not exceed 30" in depth.	$1,458
3380-0134	On Scene Solutions adjustable mounted roll-out/tilt down tray mount in the [#LOC] compartment. This tray shall not exceed 30" in depth.	$1,733
3380-0150	Fixed back wall mounted toolboard with swirled finish. Toolboard to be spaced off wall a half inch. Location(s): [#LOC].	$348
3380-0155	Running board suction tray. Includes Turtle Tile brand black floor matting in bottom of tray. Location(s): [#LOC].	$502
3380-0158	Floor mounted roll-out tray. Includes OnScene Solutions slide 81900 series. 500 lbs. tray capacity. Location: [#LOC].	$1,893
3380-0159	Adjustable tool board with 500 lbs slides. Includes upper and lower adjustable track, .75" x .75" aluminum angle welded to front edge and gas shock actuated. Tool board sized to compartment height and depth as applicable. Location(s): [#LOC].	$844

3380-0162	Vertical hinged swing-out pegboard toolboard. Location: [#LOC]. Hinge along rearward compartment wall and position centered front to rear. Includes latch to secure in the closed position and gas shock to secure in the open position that is accessible from the ground.	$1,609
3380-0167	Vertical hinged heavy duty swing-out toolboard. Location: [#LOC]. Hinge along forward compartment wall and position centered between door and back wall. Includes D-Ring latch to secure in the closed position that is accessible from the ground. Hinge made from 1/2" stainless steel rod and stainless steel plate with flanged bearing top and bottom.	$1,558
3380-0168	Floor mounted roll-out tray with 500 lbs. capacity. Locate in R1 offset forward. Tray to be half the width of compartment.	$642
3380-0169	Adjustable roll-out tray with 500 lbs. capacity. Tray to have 6" lips. Location(s): [#LOC].	$1,187
3380-0171	Floor mounted bi-directional Slide Master with tray. Model SM2-D-SP. Rear wall of tray to extend up as high as possible to make a toolboard. Includes return style reinforcing bends on vertical sides and horizontal top edges of toolboard. Mounted on floor of L1/R1 transverse.	$1,898
3380-0173	Vertical hinged heavy duty swing-out pegboard toolboard. Location: [#LOC]. Hinge along forward compartment wall and position centered between door and back wall. Includes D-Ring latch to secure in the closed position that is accessable from the ground. Hinge made from 1/2" stainless steel rod and stainless steel plate with flanged bearing top and bottom.	$1,647
3380-0177	Prepare upper back walls of compartment L3 and L4 with studs for dealer to provide plywood (or whatever material) toolboard panels. Studs are to be threaded stainless steel.	$282
3380-0179	Vertical hinged heavy duty swing-out aluminum tool board(s) shall be provided for compartment(s) [#LOC]. The tool board shall be constructed of 1/4" (.25") smooth aluminum plate, peg board style, and be sized in height and length as applicable. The tool board shall be position centered between door and back wall and hinged along rearward wall mounted. The hinge shall be made from 1/2" stainless steel rod and stainless steel plate with flanged bearing top and bottom that will permit the board to swing out of the compartment for easier access to tools and/or equipment. The tool board shall latch to a 3" x 3" extrusion, with a Tri-Mark latch to secure the toolboard in the closed position.	$2,012
3380-0180	(2) Hand hold slotted cut-outs shall be provided on rollout tray's front wall (one each side), for easier roll-out/roll-in. Rubber trim shall line the hand cut outs. Approximate size of cut-out to be 1-1/2" x 5". Locate on each tray in [#LOC].	$37
3380-0181	Vertical hinged swing-out toolboard. Located in [#LOC] 12" from door. Hinge along rearward compartment wall and position centered between door and back wall. Includes D-Ring latch to secure in the closed position that is accessable from the ground and a positive hold open device in the open position.	$1,484
3380-0182	Floor mounted slidemaster roll-out tray to hold (3) SCBA donning stations. Donning stations will be Zico spring clip brackets. Location [#LOC].	$1,694
3380-0189	Running board suction tray with a diamond plate door hinged on the inboard side with quick release flush latch(s) and a lanyard type holding device. Includes removable slats in bottom of tray. Location(s): [#LOC].	$1,066
3380-0191	Vertical hinged heavy duty swing-out toolboard. Location: [#LOC]. Hinge along rearward compartment wall and position centered between door and back wall. Includes D-Ring latch to secure in the closed position that is accessible from the ground. Hinge made from 1/2" stainless steel rod and stainless steel plate with flanged bearing top and bottom.	$1,558
3380-0194	PAC TRAC panels vertical stacked on each side of Swing-out Toolboard. Locate:[#LOC].	$1,532
3380-0196	Vertical hinged heavy duty swing-out pegboard toolboard. Location: [#LOC]. Hinge along rearward compartment wall and includes D-Ring latch to secure in the closed position that is accessible from the ground. Hinge made from 1/2" stainless steel rod and stainless steel plate with flanged bearing top and bottom.	$1,632
3380-0197	Floor mounted roll-out/tilt down tray with aluminum frame. Mount on [#LOC] floor. Tray(s) to have 2" high sides all around IPO standard.	$1,047
3380-0198	Adjustable mounted roll-out/tilt down tray with aluminum frame. Location(s): [#LOC]. Tray(s) to have 2" high sides all around IPO standard. For use in single depth or rescue style compartments.	$1,326
3380-0199	Floor mounted bi-directional Slide Master with tray. Model SM2-D-SP. Includes fixed toolboard centered in tray lengthwise extending up as high as possible. Toolboard to be fabricated from 1.5" square aluminum tubing for frame and centered inside of frame shall be .250" smooth plate with bracing on each end for rigidity when tools are mounted. Tray/toolboard mounted on L1/R1 transverse floor.	$2,296
3380-0200	Running board suction tray (floating style). Includes tapered 3" front corner and removable slats in bottom of tray. Location(s): [#LOC]. Trays to be smooth plate painted black durabak.	$827
3380-0203	Adjustable peg tool board. Includes upper and lower adjustable track and gas shock actuated. Tool board sized to compartment height and depth as applicable. Location(s): [#LOC].	$916
3380-0204	Floor mounted Slide Master with tray. Model SM3-LP (low profile). Single depth. Mount on [#LOC] floor.	$919
3380-0206	Adjustable peg tool board. Includes upper and lower adjustable track with lock in/lock out latch. Slides for use with deep compartments. Toolboard sized to compartment height and depth as applicable. Location(s): [#LOC].	$1,154
3380-0210	Pac Trac panels vertically stacked on forward wall of transverse storage box located in L1/R1.	$1,401
3380-0211	Officer side running board suction tray shall have 1/2" drain holes IPOS.	$26
3380-0212	Floor mounted rollout tray/toolboard, with gas spring and 500 lbs. capacity. The vertical peg board tool board will be mounted on adjustable mount(s) on the floor of the roll out tray. Includes return style reinforcing bends on vertical front and rear edges of tool board. Tool board sized to compartment height and depth as applicable. Location: [#LOC].	$1,373

3380-0220	Floor mounted roll-out/tilt down and adjustable mounted roll-out/tilt down trays with aluminum frame. Trays to have 2" high sides all around IPO standard. Mount in [#LOC] compartment.	$2,372
3380-0222	Floor mounted roll-out inverted tray with 500 lbs. capacity. Location: [#LOC].	$642
3380-0224	Floor mounted roll-out tray, with gas spring. 500 lbs. capacity. Tray shall be made of 1/4" smooth aluminum. Location: [#LOC].	$850
3380-0229	Adjustable toolboard partition. With unistrut track mounted to inside of rollout tray on floor for toolboard to adjust side to side. Toolboard to be fabricated from 1.5" square aluminum tubing for frame and centered inside of frame shall be .250" smooth plate with bracing on each end for rigidity when tools are mounted. Locate in [#LOC] floor mounted roll-out tray.	$498
3380-0230	Compartment underbody. Includes drop down front door with push-button latches. Locate: Span below R1 and R2.	$1,374
3380-0233	Adjustable roll-out tray with 500 lbs. capacity. Tray to have raised forward lip with hole(s) to accommodate mounting of captive rollers for optioned reels in compartment. Tray at full extension shall position rollers outward to provide additional protection from hoses chafing or damaging painted surfaces: [#LOC].	$1,253
3380-0236	Vertical hinged heavy duty swing-out toolboard with storage trough(s). Location: [#LOC]. Hinge along forward compartment wall and position centered between door and back wall. Includes D-Ring latch to secure in the closed position that is accessible from the ground. The Toolboard shall include a 5" x 5" Trough, enclosed on each end and running full length along the botom edge of the board, both inside and outside (for as long as available space allows when fully opened), used for small containers storage. Hinge made from 1/2" stainless steel rod and stainless steel plate with flanged bearing top and bottom.	$1,703
3380-0237	Compartment underbody 30" wide. Includes drop down front door with push-button latches. The storage compartment shall hold approximately 50` of 3" DJ hose. Locate [#LOC}.	$1,180
3380-0238	Pac Trac Vertical hinged swing-out toolboard, adjustable in and out. Location: [#LOC]. Hinge along forward compartment wall. Includes latch to secure in the closed position that is accessible from the ground.	$1,533
3380-0240	Floor mounted stainless steel roll-out tray. Includes OnScene Solutions slide 81900 series. 500 lbs. tray capacity. Location: [#LOC].	$1,920
3380-0243	Adjustable roll-out tray. Includes 500lbs. tray capacity. Location: L3 compartment. The tray to be maximum of 20" deep x standard compartment width size. Use 20" long slides due to the enhanced extended compartmentation.	$922
3380-0246	Running board suction tray. Includes removable slats in bottom of tray. Tray inside dimensions to be 35" long from front to back x 10" from rub rail inward to pump panel x 9.5" total depth inside. Tray shall be equipped with a removable slat which will reduce the listed depth dimension. The outboard edge of the tray shall have no folded lip and shall bolt through rub rail to allow for max width. Location(s): [#LOC]	$549
3380-0247	Floor mounted roll-out tray, 48" wide sized for portable pump. Includes 500lbs tray capacity. Location: R1 offset forward.	$837
3380-0249	Compartment underbody. Includes drop down front door with push-button latches. To hold approximately 25' of 5" LDH hose in each underbody compartment. Locate below L1/R1.	$1,180
3380-0261	Roll-out generator tray. Includes tray interlock. Locate R3. 23 x 18 x 3 spaced from forward wall 8 inches.	$764
3380-0262	Vertical hinged heavy duty swing-out toolboard. Location: L2. Hinge along forward compartment wall and position so that face of toolboard will be 6" into compartment from back of closed door. Includes D-Ring latch to secure in the closed position that is accessible from the ground. Hinge made from 1/2	$1,558
3380-0264	PAC TRAC panels vertical stacked on forward and rearward side walls of compartment L2.	$515
3380-0265	Tray, floor mounted roll-out with gas spring. 500 lbs. capacity. The front and rear lips shall be 1.5" high. Location: [#LOC].	$642
3380-0268	Tray / toolboard combination, floor mounted roll-out with gas spring. 500 lbs. capacity. The tray portion to be rearward. L1 rearward of CAFS unit.	$1,455
3380-0273	Fixed back wall mounted toolboard. Toolboard to be spaced off wall a half inch. Location(s): L1 lower on forward, rearward and back walls. Note toolboard fixed to back wall will be removable due to jack access.	$212
3380-0274	Vertical hinged heavy duty swing-out toolboard. Location: [#LOC]. Hinge along forward compartment wall and position centered between door and back wall. Includes D-Ring latch to secure in the closed position that is accessible from the ground and a ball type nylon catch with a ball socket rod to hold device in the open position. Hinge made from 1/2" stainless steel rod and stainless steel plate with flanged bearing top and bottom.	$1,593
3380-0275	Vertical hinged heavy duty swing-out toolboard. Location: [#LOC]. Hinge along forward compartment wall and position 8 in. in from door opening between door and back wall. Includes D-Ring latch to secure in the closed position that is accessible from the ground and a ball type nylon catch with a ball socket rod to hold device in the open position. Hinge made from 1/2" stainless steel rod and stainless steel plate with flanged bearing top and bottom.	$1,593
3390-0056	Storage system for compartment L1. Includes vertical partition centered from side to side, (2) adj. tool boards to rear of partition, (1) adj. shelf ahead of partition in lower section. HP75 / HP78 SideStacker.	$2,108
3390-0057	Storage system for compartment R1. Includes vertical partition centered from side to side, (1) floor mounted roll-out tray w/24" 500# slides ahead of partition, (1) adj. shelf rearward of partition. HP75 / HP78 SideStacker.	$1,370
3390-0058	Storage system for compartment L1. Includes vertical partition 24" from right side wall, (2) adj. tool peg boards to rear of partition, adj shelf lower ahead of partition & fixed shelf at the top of the rear wall offset ahead of partition. HP75 / HP78 SideStacker	$2,482

3390-0061	Storage system for compartment L1; Vertical partition 12" from right side wall, (1) adj. tool board to rear of partition & (2) adj shelves ahead of partition in lower section. HP75 / HP78 SideStacker	$1,551
3390-0064	Compartment R4 to have the following storage package. (1) full height vertical partition at rear wall offset and the following located forward of the partition: (1) adjustable shelf in upper area, (1) permanent shelf at offset and (1) floor mntd roll-out tray w/500lb slides.	$1,301
3390-0065	Compartment L4 to have the following storage package. (1) full height vertical partition at rear wall offset and the following located forward of the partition: (1) adjustable shelf in upper area, (1) permanent shelf at offset, (1) adjustable roll-out tray w/250lb slides below perm shelf and (1) floor mntd roll-out tray w/250lb slides.	$2,111
3390-0066	Compt L-1 to have the following storage package. (1) Vertical partition just rearward of breaker box full height. (1) permanent shelf at offset rearward of vertical partition. (1) Adjustable shelf in upper area rearward of vertical partition. (1) Adjustable rollout tray w/250lb slides rearward of vertical partition and (1) floor mounted rollout tray w/250lb slides rearward of vertical partition.	$2,204
3390-0069	Compartment L3 to have the following: (1) vertical partition located 30" from forward wall and (2) adjustable shelves with adjustable tracking forward and rearward area of partition.	$1,323
3390-0072	Compartment storage package to include (1) vertical partition to rear of reel and (1) adjustable shelf to rear of partition. Location: Driver and officer side compartments over forward tandem.	$1,242
3390-0075	Storage system for compt L-1. Includes (2) vertical partitions (1) 26" from right side wall and (1) 12" ahead of full height partition from fixed shelf to floor, (2) Adj pull-out toolboards rearward of full height partition, (1) Fixed shelf at offset forward of full height partition, (1) Adj shelf forward of small partition, (1) 250# roll-out tray forward of full height partition floor mounted, and (1) Vert extinguisher rack located in rollout tray - rack to be alum approx 8"W X 24"L X 8"H with (2) partitions evenly spaced.	$3,468
3390-0076	Compartment L4 to have the following storage package. (1) full height vertical partition at rear wall offset and the following located forward of the partition: (1) permanent shelf at offset and (1) floor mntd roll-out tray w/250lb slides.	$943
3390-0077	Compartment L1 to have the following storage package. (1) permanent shelf at offset, (1) vertical partition 20" off rear wall below permanent shelf and the following located forward of the partition: (1) adjustable shelf and (1) floor mntd roll-out tray w/250lb slides.	$1,266
3390-0078	Compartment R4 to have the following storage package. (1) full height vertical partition at rear wall offset and the following located forward of the partition: (1) adjustable shelf in upper area, (1) permanent shelf at offset and (1) floor mntd roll-out tray w/250lb slides.	$1,107
3390-0080	Compartment L3 to have the following: (1) vertical partition located 14" from forward wall and (2) adjustable shelves with adjustable tracking forward of partition.	$857
3390-0085	Storage system for compartment R3. Includes (1) adj. tool board in frt half of compt.and roll-out tray w/24" 250# slides on floor in rear half of compartment.	$1,426
3390-0087	Storage system for Tiller transverse compt L2/R2. Includes 9W x 26H x 88D stokes rack against rear wall, air bag rack with (6) 2w x 24H x 24D slots on left side upper transverse floor offset forward and (2) adj shelves on right side ahead of stokes rack from door opening in to back of air bag rack.	$2,720
3390-0094	Storage system for Tiller transverse compt L3/R3. Includes: (2) adjustable SlideMaster roll-out trays in the upper center of the transverse only. Each tray to be approx. 28" deep x max width.	$2,839
3390-0104	Compartment L1/R1 transverse to have the following storage package: (3) vertical stacked horizontal boxes on R1 forward wall; (1) approx. 8"W x 13"H x 60"D lower, (1) approx. 8"W x 8"H x 60"D middle and upper. Each box supplied with nylatron on floor. (1) floor mntd SlideMaster bi-directional rollout tray located rear of boxes and (1) full width/depth permanent shelf at top of boxes.	$3,116
3390-0105	Compartment L3 to have the following storage package: (1) vertical partition 24" off forward wall and the following located forward of the partition: (2) adjustable shelves. Rearward of partition: (2) adjustable tool boards.	$2,433
3390-0107	Compartment [#LOC] to have the following: (1) permanent shelf located at compartment break with (1) vertical partition located 12" off rearward wall mounted to bottom of permanent shelf. The following located forward of the partition: (1) floor mntd roll-out tray w/250lb slds, (1) adj roll-out tray w/250lb slds and (1) adjustable shelf. Rearward of partition: (2) adjustable tool boards.	$3,627
3390-0108	Compartment L5 to have the following storage package. (1) permanent shelf located at upper offset, (2) vertical partitions; (1) front and (1) rear at offsets and (1) adjustable shelf between vertical partitions.	$684
3390-0109	Compartment [#LOC] to have the following storage package: (1) vertical partition 17" off rearward wall and the following located forward of the partition: (1) floor mntd roll-out tray w/250lb slds and (2) adjustable shelves. Rearward of partition: (1) adjustable tool board.	$2,288
3390-0119	Storage system for compartment L1. Includes (1) floor mounted tray 500#, (1) permanent shelf at offset, (1) vertical partition approx 15" off forward wall upper area, (1) Adjustable shelf rearward of vertical partition. HP75 / HP78 SideStacker	$1,421
3390-0125	Compartment L5 to have the following storage package. (1) permanent shelf located at upper offset, (1) vertical partition at front offset and (1) adjustable shelf rear of vertical partition.	$590
3390-0126	Compartment R2 to have the following storage package: (1) permanent shelf at offset, (1) vertical partition centered off forward wall and the following located forward of the partition: (1) adjustable tool board. Rearward of partition: (2) adjustable shelf.	$1,502
3390-0127	Compartment [#LOC] to have the following storage package: (1) vertical partition 24" off forward wall and the following located rearward of the partition: (1) adjustable shelf.	$536
3390-0133	Compartment L2 to have the following storage package: (1) vertical partition 24" off forward wall and the following located forward of the partition: (2) adjustable shelves. Rearward of partition: (2) adjustable peg tool boards.	$2,507

3390-0134	Storage system for compartment L1. Includes vertical partition 28" from left side wall, (2) adj. HD tool boards to rear of partition, and (2) adj. shelves in lower area ahead of partition. HP75 / HP78 SideStacker.	$2,544
3390-0135	Storage system for compartment R1. Includes (1) fixed shelf with a 1" lip 30" from floor, (1) fixed shelf 40" from floor, (1) vertical partition between floor and lower shelf (centered left to right), (1) vertical partition above top fixed shelf 24" from left side, (1) floor mounted roll-out tray w/500# slides ahead of partition, and (1) floor mounted roll-out tray w/500# slides rearward of partition. HP75 / HP78 SideStacker with tall R1.	$1,889
3390-0143	Compartment [#LOC] to have the following storage package: (1) vertical partition 12" off forward wall and the following located rearward of partition: (1) floor mntd roll-out tray, (1) adjustable shelf and (1) adjustable roll-out/tilt down tray.	$2,386
3390-0147	Storage system for compartment L1. Includes fixed shelf at offset (above extrusion if applicable), vertical partition above permanent shelf 20" from left side wall and (2) adj. shelves rearward of partition. HP75 / HP78 SideStacker.	$953
3390-0148	Storage system for compartment R1. Includes fixed shelf at offset (above extrusion if applicable), vertical partition above permanent shelf adjacent to DEF tank and (1) adj. shelf rearward of partition. HP75 / HP78 SideStacker.	$720
3390-0150	Storage system for compartment L1. Includes vertical partition 24" from right side wall, (2) adj. HD tool boards to rear of partition and a roll-out tray w/24" 500# slides on floor ahead of partition. HP75 / HP78 SideStacker.	$2,534
3390-0158	Storage system for compartment R1. Includes vertical partition 24" from left side wall, (2) adj. HD tool boards to rear of partition, (2) adj roll-out tilt down trays ahead of partition (above offset) and a roll-out tray w/24" 500# slides on floor ahead of partition. HP75 / HP78 SideStacker.	$5,427
3390-0159	Storage system for compartment L1. Includes vertical partition 24" from right side wall, (2) adj. HD tool boards to rear of partition, (2) adj roll-out tilt down trays ahead of partition (above offset) and a roll-out tray w/24" 500# slides on floor ahead of partition. HP75 / HP78 SideStacker.	$5,427
3390-0164	Storage system for compartment R5. Includes vertical partition centered from side to side, (1) adj. shelf ahead of partition and (1) floor mounted roll-out tray w/ 500# slides rearward of partition. Aerial application.	$1,460
3390-0165	Storage system for compartment L2. Includes (1) fixed shelf just below cord reel and (1) adj. HD tool board below fixed shelf. Aerial application.	$937
3390-0166	Storage system for compartment R2. Includes (1) fixed shelf just below cord reel and (1) adj. HD tool board below fixed shelf. Aerial application.	$937
3390-0170	Storage system for compartment L6. Includes vertical partition 24" from right side wall, (2)HD tool boards to rear of partition and (2) adjustable shelves ahead of partition. Aerial application.	$2,543
3390-0174	Storage system for compartment L1. Includes vertical partition 24" from right side wall, (2) adj. tool boards to rear of partition, (1) adj roll-out tilt down trays ahead of partition (above offset) and roll-out tray w/24" 500# slides on floor ahead of partition. HP75 / HP78 SideStacker.	$3,862
3390-0175	Storage system for compartment R1. Includes vertical partition 24" from left side wall, (2) adj. tool boards to rear of partition, (1) adj roll-out tilt down tray ahead of partition (above offset) and roll-out tray w/24" 500# slides on floor ahead of partition. HP75 / HP78 SideStacker.	$3,862
3390-0180	Storage system for compartment L3. Includes vertical partition 30" from forward wall, (2) adj. HD tool boards to rear of partition and (2) adjustable shelves ahead of partition.Note:Adjustable tracks for toolboards to run from side to side on compartment floor and ceiling. Aerial application.	$2,722
3390-0181	Storage system for compartment R2. Includes (1)fixed shelf at offset and the following below:(1) vertical partition 10" from forward wall and(1) adjustable shelf to rear of partition.Aerial application.	$719
3390-0185	Bolt-in 3/16" diamond plate partition wall. Locate in upper dunnage area beneath aerial between and to rear of L3/R3 from side to side.	$213
3390-0187	Compartment [#LOC] to have the following storage package: (1) vertical partition 8" off rearward wall and the following located forward of the partition: (2) adjustable shelves with tracks and (1) floor mounted roll-out tray w/500lb slides.	$1,498
3390-0202	Storage system for compartment R2. Includes vertical partition 22" from forward wall, (1) adj. HD tool board to rear of partition and (2) adjustable shelves ahead of partition. Aerial application.	$1,700
3390-0204	Storage system for compartment R2. Includes vertical partition 30" from forward wall, (2) adj. HD peg tool boards to rear of partition,(3) adjustable shelves and (1) adjustable rollout tilt/down tray ahead of partition. Aerial application.	$4,418
3390-0205	Storage system for compartment L1. Includes vertical partition 24" from right side wall, (2) adj. HD tool boards to rear of partition, (1) adj. shelf lower ahead of partition & fixed shelf at the top of the rear wall offset ahead of partition. HP75 / HP78 SideStacker	$2,403
3390-0208	Storage system for compartment L1. Includes vertical partition 42" from left side wall, roll-out tray w/24" 500# slides on floor, adj. rollout tray lower & adj. shelf upper ahead of partition. (2) adj. shelves (1 upper/ 1 lower) to rear of partition. HP75 / HP78 SideStacker	$2,832
3390-0209	Storage system for compartment R1. Includes vertical partition 24" from left side wall, (2) adj. HD tool boards to rear of partition, roll-out tray w/24" 500# slides on floor ahead of partition & (2) adj. shelves ahead of partition (1 upper/ 1 lower). HP75 / HP78 SideStacker	$3,182
3390-0223	Storage system for compartment L1. Includes vertical partition 24" from right side wall, (2) adj. HD tool boards to rear of partition, roll-out tray w/24" 500# slides on floor ahead of partition & adj. shelf ahead of partition (upper). HP75 / HP78 SideStacker	$2,949
3390-0228	Storage system for compartment [#LOC]. Includes (1) fixed shelf at offset and the following below: (1) vertical partition at compartment depth offset and (1) adjustable shelf ahead of partition. Aerial application.	$719

3390-0249	Storage system for compartment R1. Includes (1) roll-out tray w/24" 500# slides on floor, (1) adjustable shelf upper section and (1) adjustable rollout tray sized to be adjustable from floor to ceiling. HP75 / HP78 SideStacker	$2,111
3390-0254	Storage system for compartment L1. Includes vertical partition 24" from right side wall, (2) adj. HD tool boards W/PAC TRAC to rear of partition (mounted as high as possible), (1)roll-out tray w/24" 500# slides on floor and (1)adjustable rollout tray w/24" 500# slides (lower) ahead of partition and fixed shelf at the top of the rear wall offset ahead of partition. HP75 / HP78 SideStacker.	$4,443
3390-0263	Storage system for compartment L1. Includes vertical partition 24" from right side wall, (2) adj. HD tool boards to rear of partition & fixed shelf at the top of the rear wall offset ahead of partition. HP75 / HP78 SideStacker.	$1,989
3390-0264	Storage system for compartment L2. Includes vertical partition offset 16" from rearward wall, (1) adj. HD tool board to rear of partition and (2) adjustable rollout trays ahead of partition. Aerial application.	$3,049
3390-0265	Storage system for compartment L2. Includes vertical partition offset 20" from rearward wall, (2) adj. HD tool boards to rear of partition. (1) adjustable rollout tray, (1) floor mounted rollout tray and (1) adjustable shelf all ahead of partition. Aerial application.	$3,809
3390-0269	Storage system for compartment L1. Includes vertical partition centered from side to side, (1) adj. HD tool board to rear of partition, adj. shelf ahead of partition in lower with fixed shelf above at offset. HP75 / HP78 SideStacker.	$1,705
3390-0278	Compartment [#LOC] to have the following storage package: (1) vertical partition approximately 12" off rearward wall and the following located forward of the partition: (2) adjustable roll out heavy duty tool boards w/500lb slides . Rearward of partition: (3) adjustable shelves.	$2,675
3390-0279	Compartment [#LOC] to have the following storage package: (1) vertical partition rearward of cord reel and the following located rearward of partition: (1) adjustable shelf.	$629
3390-0280	Storage system for compartment [#LOC]. Includes vertical partition offset 20" from rearward wall, (2) adj. HD tool boards to rear of partition. (1) Adjustable rollout tray, (1) floor mounted rollout tray and (1) adjustable shelf (notched for clearance as required in the upper storage location) all ahead of partition.	$3,809
3390-0286	Compartment [#LOC] to have the following storage package: (1) vertical partition approximately 20" off rearward wall and the following located forward of the partition: (1) floor mounted roll out tray w/ 500lb slides and (2) adjustable roll-out tray w/500lb slides (1) upper and (1) lower. Rearward of partition: (2) adjustable roll out heavy duty tool boards w/500lb slides.	$4,008
3390-0290	Compartment [#LOC] to have the following storage package: (1) vertical partition 15" off rearward wall and the following located forward of the partition: (1) 2"x2" angle floor mounted to outside edge and (1) permanent shelf just below breaker box. Rearward of partition: (1) adjustable heavy duty tool boards.	$1,269
3390-0291	Compartment [#LOC] to have the following storage package in the lower full depth area: (1) vertical partition 15" off forward wall and the following located forward of the partition: (1) adjustable heavy duty toolboard. Rearward of partition: (1) adjustable shelf.	$1,417
3390-0293	Compartment [#LOC] to have the following storage package: (1) vertical partition 12" off forward wall, and the following located forward of the partition: (1) adjustable tool board, rearward of the partition: (3) adjustable shelves.	$2,180
3390-0294	Compartment [#LOC] to have the following storage package: (1) vertical partition 8" off rearward wall, and the following located forward of the partition: (1) floor mntd roll-out tray w/500lb slds, (3) adjustable shelves. Rearward of partition: open for storage.	$1,761
3390-0310	Storage system for compartment L1. Includes vertical pegboard partition 24" from right side wall, (2) adj. HD pegboard tool boards to rear of partition, roll-out tray w/24" 500 lb. slides on floor ahead of partition & fixed shelf above offset (below breaker box) and an adjustable shelf offset ahead of partition in lower section. HP75 / HP78 SideStacker.	$3,243
3390-0320	Storage system for compartment [#LOC]. Includes vertical partition 24" from left side wall, (2) adj. HD tool peg boards rearward of partition and (2) adjustable shelves ahead of partition. Aerial application.	$2,691
3390-0325	Storage system for compartment L1. Includes vertical partition 30" from left side wall, (2) adj. HD tool boards to rear of partition, roll-out tray w/24" 500# slides on floor ahead of partition & adj. shelf ahead of partition (upper). HP75 / HP78 SideStacker.	$2,949
3390-0329	Compartment LT and RT transverse to have the following storage package: (1) vertical partition 12" off forward wall in upper available transverse area above the frame rails to extend full width of the floor transverse area above rails and the following located forward of the partition: (2) adjustable shelves with tracks each side to extend to the half way depth of the transverse. These shelves to have lips all around to prevent items falling from shelf in transverse interior. Rearward of partition: (1) adjustable heavy duty tool board with hidden shock each side to be half depth of transverse and to extend from transverse floor up to available space or to other compartment options.	$3,717
3390-0341	Compartment L4 to have the following: (1) vertical partition located 24" off rearward wall and (1) adjustable shelf with adjustable tracking forward area of partition.	$614
3390-0350	Compartment [#LOC] to have the following storage package: (1) vertical partition 17" off rearward wall and the following located forward of the partition: (1) 2"x2" angle floor mounted to outside edge and (1) permanent shelf just below breaker box. Rearward of partition: (1) adjustable heavy duty tool boards.	$1,269
3390-0360	Compartment storage package to include (1) vertical partition to rear of reel and (1) adjustable shelf to rear of partition. Location: Driver and officer side compartments over rearward tandem.	$1,242
3390-0373	Storage system for compartment L1. Includes vertical partition 12" from left side wall, (1) adj. shelf ahead of partition (lower) & (2) adj. shelves rearward of partition (1 upper/1 lower). HP75 / HP78 SideStacker.	$1,282

3390-0381	Compartment L5 to have the following storage package. Includes vertically hinged heavy duty swing-out toolboard. Hinge along rearward compartment wall and positioned 8" in from door opening. Includes D-Ring latch to secure in the closed position that is accessible from the ground. Hinge made from 1/2" stainless steel rod and stainless steel plate with flanged bearing top and bottom. (2)Fixed shelves with partition at vertical compartment depth change (26" deep area) to make cubby storage bins for storing (6) smooth plate aluminum plate storage boxes with hand hold cut outs approximate size: 10"W x 16"D x 6"H, located in 26" deep area behind swing-out toolboard. HP100 ladder.	$2,434
3390-0382	Compartment R5 to have the following storage package. Includes vertically hinged heavy duty swing-out toolboard. Hinge along rearward compartment wall and positioned 6" in from door opening. Includes D-Ring latch to secure in the closed position that is accessible from the ground. Hinge made from 1/2" stainless steel rod and stainless steel plate with flanged bearing top and bottom and (1) Adjustable shelf behind swing out toolboard in remaining area. HP100 ladder.	$1,974
3390-0383	Storage system for compartment L1. Includes vertical partition 21" from right side wall, (1) adj. HD tool board to rear of partition, roll-out tray w/24" 500# slides on floor ahead of partition & (2) adj. shelves ahead of partition in compartment's upper section. HP75 / HP78 SideStacker.	$2,350
3390-0384	Storage system for compartment R1. Includes vertical partition 21" from left side wall, (1) adj. HD tool board to rear of partition, roll-out tray w/24" 500# slides on floor ahead of partition & (2) adj. shelves ahead of partition in compartment's upper section. HP75 / HP78 SideStacker.	$2,350
3390-0395	Compartment L1/R1 transverse to have the following storage package. Includes transverse vertical partition offset 10" from rearward wall, (1) transverse fixed shelf offset 22" above transverse floor between forward wall and partition and (1) transverse adjustable shelf mounted above fixed shelf. L1 compartment to include (1) 1/2 depth adjustable HD tool board to rear of partition and aluminum smooth plate sleeve for Little Giant ladder model 17 mounted to the bottom of fixed shelf. R1 compartment to include (1) 1/2 depth adjustable shelf mounted between rearward wall and partition.	$3,766
3390-0396	Storage system for compartment L2. Includes vertical partition centered in compartment, (2) adj. HD tool boards to rear of partition and (2) adjustable shelves and (1) floor mounted rollout tray forward of partition. Aerial application.	$3,194
3390-0403	Storage system for compartment L2. Includes vertical partition offset approx. 18" from forward wall, (2) adj. HD peg tool boards ahead of partition, mounted below compartment notch for water tank and (2) adjustable shelves to rear of partition. Aerial application	$2,869
3390-0404	Storage system for compartment R2. Includes vertical partition offset approx. 18" from forward wall, (2) adj. HD peg tool boards ahead of partition, mounted below compartment notch for water tank and (2) adjustable shelves to rear of partition. Aerial application	$2,869
3390-0407	Storage system for compartment L2. Includes vertical partition 20" from forward wall and fixed shelf above at offset, (2) adj. HD tool boards ahead of partition and floor mounted rollout tray with (3) square storage receivers for fire extinguishers located to rear of partition, each receiver approximately 11"W x 11"L x 11"D. Receivers arranged in tray two side by side outboard and one centered to inside. Aerial application.	$2,849
3390-0408	Storage system for compartment R2. Includes vertical partition 24" from forward wall and fixed shelf above at offset, (2) adj. HD tool boards to rear of partition and (3) adjustable shelves ahead of partition. Aerial application.	$2,883
3390-0409	Compartment L5 to have the following storage package. (1) adjustable shelf located in upper area with the ability to be adjustable from ceiling down 18" and the following below: (1) vertical partition at front compartment depth offset, (1) vertical partition at rear compartment depth offset with (1) adjustable shelf between the partitions. HP100 Platform.	$1,261
3390-0420	Compartment L5 to have the following storage package. (1) permanent shelf located at upper offset and the following below permanent shelf: (1) vertical partition at front offset and (2) adjustable shelves ahead of vertical partition. HP100 Platform.	$914
3390-0421	Compartment L3 to have the following storage package. (1) vertical partition located just to rear of (3) three forward storage bins approx size: 10" wide x 12" high openings (as deep as compartment will allow). Storage bins arranged from forward wall one after the next mounted to floor with partition mounted to rear leaving open storage rearward. HP100 Platform.	$544
3390-0422	Compartment R2 to have the following storage package. Floor mounted storage compartment (approx size: 26" wide x 16" tall opening (as deep as compartment will allow) bolted against lower forward corner of compartment. Bolted to top surface of storage compartment shall be an adjustable HD tool board, notched to allow toolboard to be full height.. HP100 Platform.	$1,167
3390-0423	Compartment R5 to have the following storage package. Permanent shelf at upper offset with (3) dividers, dividing the area above into (4) four equal spaces. HP100 Platform.	$405
3390-0424	Storage system for compartment L1. Includes vertical partition 25" from left side wall with (2) fixed smooth plate toolboards mounted to back wall ahead of partition, (1) upper approximately 24"W x 35"H and (1) lower approximately 24"W x 26"H and (3) adjustable HD tool boards located rearward of partition. HP75 / HP78 SideStacker.	$3,168
4000	**Pump and Tank**	
4000-0036	Stainless Steel Victaulic couplings for all discharge and intake plumbing.	$3,978
4005-0010	Hale RSD (1250 GPM) single stage, PTO driven pump. For use with rear mount pump body and mid-ship engine applications.	$26,562
4005-0011	Hale 8FG Pump 3000/3500 GPM single stage	$43,028
4005-0012	Hale 8FGR 1500-2000 GPM Pump single stage	$41,135
4005-0013	Hale QFLO 750-1250 GPM pump, single stage.	$22,327
4005-0014	Hale QMID 1250 GPM single stage Pump	$30,091
4005-0015	Hale QMAX 1000-1250 GPM single stage Pump	$26,853
4005-0016	Hale QMAX 1000-2250 GPM single stage pump.	$26,853

4005-0017	Hale QTWO 1000-1250 GPM two stage Pump	$33,917
4005-0018	Hale QTWO 1500-2000 GPM two stage pump.	$34,823
4005-0019	Waterous CS 750-1250 single stage pump.	$23,441
4005-0020	Waterous CM 750-1250 two stage Pump	$26,924
4005-0021	Waterous CSU 1500-2250 GPM single stage pump.	$26,590
4005-0022	Waterous CMU 1500-2250 GPM two stage pump.	$40,355
4005-0036	Extended Hale Pump 1 Year Warranty in addition to the standard 2 year warranty.	$700
4005-0037	Extended Hale Pump 2 Year Warranty in addition to the standard 2 year warranty.	$1,346
4005-0038	Extended Hale Pump 3 Year Warranty in addition to the standard 2 year warranty.	$1,991
4005-0039	Extended Waterous Pump 3 Year Warranty in addition to the standard 2 year warranty.	$1,693
4005-0044	Rating 3000 GPM Industrial	$2,635
4005-0046	Hale QSMG 1000-2000 GPM Pump single stage Bronze (Dealer only)	$42,120
4005-0052	Hale QMAX 1500-2250 GPM single stage Pump with K Gear Box	$27,890
4005-0057	Hale DSD Pump 750/1500 GPM single stage	$30,341
4005-0060	Hale HPX300 BD26 Hale Portable Pump mounted in pan. W/Remote controls in Cab. Hook up to Chassis Fuel System.	$19,602
4005-0063	Hale QFLO Plus 750-1250 GPM Pump single stage	$41,299
4005-0079	Hale DSD Pump 750/1500 GPM single stage	$26,567
4005-0085	Hale QMAX-21L 1750 pump. Tradition.	$23,897
4005-0096	Waterous CMU 1500-2250 GPM two stage Pump	$30,136
4005-0098	Waterous Pump TPP-5 Extended Warranty.	$1,693
4005-0099	Hale Pump Pro-Tech Extended 3 Year Warranty in addition to the standard 2 year warranty.	$1,915
4005-0122	Waterous CSU 1500-2250 GPM single stage Pump. Shall include the Endurance CSC20 Waterous, C20 transmission.	$37,215
4005-0129	Hale 8FG single stage pump. For use with Industrial products.	$37,296
4005-0130	Hale QFLO-PLUS 750-1250 GPM Pump single stage	$22,096
4005-0131	E-ONE 1250-1500 GPM pump, single stage.	$34,017
4005-0143	Hale DSD Pump 750/1500 GPM single stage	$21,881
4005-0150	Hale MG Pump 500/1000 GPM single stage	$21,155
4005-0152	Hale MG Pump 500/1000 GPM single stage	$17,900
4005-0154	Hale QMAX-XS 1250-2250 GPM single stage pump.	$27,783
4005-0155	Hale RME/RGA 3000gpm Pump for Rear Mount with (3) 6" Inlets.	$38,106
4005-0169	Hale QMAX-XS R 1250-2250 GPM single stage pump. (R GEAR BOX)	$28,386
4005-0171	Waterous CXVK 750-1250 single stage PTO Pump. On 4X4 commercials, requires PTO on top port of the transmission.	$23,348
4005-0172	Waterous CS 750-1250 single stage pump. (With gear box to front IPOS)	$26,764
4005-0182	Waterous CXVK 1250 GPM single stage pump with 150CFM CAFS	$62,641
4005-0185	Hale CBP 250 GPM PTO pump.	$9,883
4010-0195	300 gallon "T" water tank. UPF Poly III blue fill tower.	$4,869
4010-0196	400 gallon "T" water tank. UPF Poly III blue fill tower.	$6,266
4010-0197	450 gallon "T" water tank. UPF Poly III blue fill tower. Note: Any foam cell(s) will reduce the overall water capacity.	$6,556
4010-0198	500 gallon "T" water tank. UPF Poly III blue fill tower.	$6,842
4010-0199	280 gallon "T" water tank. UPF Poly III blue fill tower. Includes sleeve for ladder tunnel.	$6,052
4010-0200	250 gallon "T" water tank. UPF Poly III blue fill tower. Includes sleeve for ladder tunnel.	$6,052
4010-0201	490 gallon "T" water tank. UPF Poly III blue fill tower. Includes sleeve for ladder tunnel.	$8,024
4010-0202	480 gallon "T" water tank. UPF Poly III blue fill tower. Includes sleeve for ladder tunnel.	$8,024
4010-0203	475 gallon "T" water tank. UPF Poly III blue fill tower. Includes sleeve for ladder tunnel.	$8,024
4010-0204	450 gallon "T" water tank. UPF Poly III blue fill tower. Includes sleeve for ladder tunnel.	$8,024
4010-0205	430 gallon "T" water tank. UPF Poly III blue fill tower. Includes sleeve for ladder tunnel.	$8,024
4010-0206	320 Gallon "T" Water Tank Note: Any foam cell(s) will reduce the overall water capacity. Tank capacity is 320 US gallon / 266 Imperial gallons / 1211 Liters.	$4,869
4010-0228	560 gallon "T" water tank. UPF Poly III blue fill tower. Note: Any foam cell(s) will reduce the overall water capacity.	$7,417
4010-0270	500 gallon "T" water tank. UPF Poly III blue fill tower. Includes sleeve for ladder tunnel.	$8,024
4010-0272	330 gallon "T" water tank. UPF Poly III blue fill tower.	$5,351
4015-0002	Mechanical speed counter for Hale pumps.	$305
4015-0007	Pump cooler, 1/4" valve with 3/8" tubing.	$160
4015-0008	Zinc anodes for Hale pump (PR), (1) discharge side and (1) intake side.	$308
4015-0012	Pump shift override, side panel mounted.	$709
4015-0013	Fire Research ThrottleXcel engine throttle. Includes engine gauges.	$1,514
4015-0014	Thermal Relief Valve - Hale TRV120.	$791
4015-0015	Valve relief system, Hale TPM.	$3,541
4015-0016	Thermal relief valve, Hale TRVL-120.	$1,434
4015-0018	Valve Inlet MIV-E - Hale. Location: [#LOC].	$3,277
4015-0019	Valve inlet MIV-M, Hale. Location: [#LOC].	$2,811
4015-0020	Valve Monarch Manual - Waterous. Location: [#LOC].	$4,212
4015-0021	Valve Monarch Air Actuated - Waterous. Location: [#LOC]	$5,219
4015-0022	Mechanical pump seal - Hale.	$724
4015-0026	Electronic speed counter for Waterous pumps.	$301
4015-0029	Hale pressure relief valve.	$1,242
4015-0030	Waterous pressure relief valve.	$1,388
4015-0031	Valve Relief System - Dual TPM Required for pump rating 2250 GPM and above.	$4,190
4015-0033	Hale 2-Stage Power Operated Transfer Valve.	$1,643

4015-0035	Waterous 2-Stage electronic transfer valve.	$1,388
4015-0036	6" Additional Intake for 2250 GPM Pump.	$1,895
4015-0037	Engine throttle, vernier.	$345
4015-0039	Pump seal mechanical for Waterous pump.	$682
4015-0041	Valve Monarch Electric - Waterous. Location: [#LOC].	$5,342
4015-0042	Waterous Overheat Protection Manager.	$1,021
4015-0043	Anodes for Hale CAFSPRO Pump (Pair), (1) Discharge side and (2) Intake Side.	$462
4015-0044	Anodes for Waterous pump - (Pair) (1) discharge side and (1) intake side.	$373
4015-0045	Throttle Selection Switch on Pump Operator's Panel for Back-Up of Relief and Throttle System.	$525
4015-0046	Hale pump shift override.	$1,129
4015-0047	Additional Hale Primer Valve. Located: [#LOC].	$580
4015-0048	Pump Shift Override - driver's side under running board forward of running board tray if applicable.	$709
4015-0049	Extend Fire Pump Grease Zerks to Operator's Panel	$407
4015-0050	Relocate Primer to the Outside of the Frame Rail on Driver's Side	$90
4015-0051	Two 4.5" Steamers for Hale Qflo Pump	$723
4015-0054	Additional Waterous Primer. Located: [#LOC].	$1,301
4015-0055	6" Additional Intake for Industrial	$2,045
4015-0056	Air operated master pump drain (upgrade).	$211
4015-0062	Primer indicator light shall be provided on the pump operator's panel, color to be red.	$111
4015-0063	TPM Relief Valve outlet to be extended to the side of truck under runningboard or compartment.	$273
4015-0064	Hale Auto Fill/Thief Inlet 2.5" Tank Fill "AutoFill" Automatic Tank Fill Valve Location: [#LOC].	$4,173
4015-0065	Schedule 40 stainless steel piping.	$1,153
4015-0066	Trident Pump Primer W/3 Barrel Push Button Control. (In addition to standard.)	$1,031
4015-0068	6" intake valve Akron electric with relief. Location: [#LOC].	$3,479
4015-0070	WATEROUS OIL PRIMER	$69
4015-0071	Valve Relief Thermal - Hale TRVL-120 W/Audible Alarm	$1,447
4015-0072	6" Intake Valve Elkhart Electric UBEC1 Control with Releif. Location: [#LOC]	$3,479
4015-0074	Manual remote operated master pump drain. The master drain control shall be clearly marked and placed in accessible location on driver side pump panel.	$310
4015-0080	6" Cap Vented "IPOS"	$17
4015-0081	Hale Semi-Automatic Priming push-button control.	$483
4015-0082	Electric Over Air Actuation Pump Cooler Valve	$419
4015-0083	Electric Over Air Actuation Engine Cooler Valve	$270
4015-0084	Pump Air Blow Out with 1/4" Snubber Valve.	$241
4015-0085	Auto Tank to Pump Operation. When Switched to Automatic Mode, The Tank Valve will Close When Suction Pressure Reaches 15 PSI & Opens When Suction PressureI Drops Below 15 PSI.	$1,773
4015-0086	Pump Cooler 1/4 Turn Valve	$252
4015-0087	Engine Cooler 1/4 Turn Valve	$252
4015-0088	Portable/Qmax Pump Shall be with Manifold and check valves for Front Bumper Turret and Ground Sweep. To be use dearing Pump&Roll operation.	$866
4015-0090	Akron Test Port for Master Gauges	$92
4015-0091	Pump cooler with .75" 1/4 turn valve.	$286
4015-0092	Hale Fill Thieft Steamers to be Flush + 2 Location [#LOC]	$1,532
4015-0109	Galvanized Victaulic Coupling. All Victaulic couplings shall galvanized.	$209
4015-0110	Valve Monarch Manual with Akron Intake Relief- Waterous. Location: [#LOC]	$2,925
4015-0111	Ferrell Compression Fittings for all Plastic Tubing in the Pump module plumbing.	$641
4015-0125	Red Switch Cover on Master Drain Switch.	$13
4015-0126	Hale PTO/MIDSHIP 250GPM to 1000gpm Pump Pressure Relief Valve	$2,195
4015-0127	Fire Research Infinity vernier type engine throttle.	$663
4015-0129	Waterous Overheat Protection Manager with audible alarm.	$960
4015-0130	Additional Trident Primer Valve, Located: [#LOC].	$348
4015-0131	Hale AnodePro Kit (3) Anodes with Flange. One on each suction tube and one anode on the discharge located as close to the center of the pump as possible.	$1,083
4015-0133	Anode for Darley pump - (1) intake side.	$403
4015-0134	Class 1 Engine Twister throttle, vernier	$838
4015-0135	Mechanical speed counter for pumps.	$371
4015-0136	Mechanical Darley pump seal.	$1,014
4015-0137	Valve Monarch Manual with Indicator lights - Waterous. Location: [#LOC].	$5,024
4015-0139	Darley Pump Overheat Thermal relief valve shall be provided with a light located on pump operator's panel.	$721
4015-0144	Manual remote operated master pump drain. The master drain control shall be clearly marked and placed in accessible location rearward below running board on driver side or L1 compartment.	$310
4015-0146	Four (4) 6.0" diameter suction inlet ports with 6" NST male threads and removable screens shall be provided, on left side.	$2,045
4015-0149	Four (4) 6.0" diameter suction inlet ports with 6" NST male threads and removable screens shall be provided, two (2) left side, and two (2) right side..	$2,045
4015-0152	Hale pump shift override. Pump shift to be recess behind pump operator pump panel with door.	$1,373
4015-0159	Valve Inlet MIV-E - Hale. Location: [#LOC].	$3,277
4015-0166	Pump cooler, automatic with 3/8" tubing. Include a check valve that is install between the pump discharge and tank that will automatically close when drafting.	$138
4015-0172	Primer indicator light shall be provided on the pump operator's panel, color to be red. The indicator light shall be upgraded to a LED indicator light IPOS.	$167
4015-0175	Additional control and air bleeder for the MIV-E to provide controls at: [#LOC].	$527
4015-0177	Additional Anode for Darley pump. Location: Discharge side of pump.	$403

4015-0178	Anodes for Waterous pump - (Three) (1) discharge side, (1) intake side and (1) inside of tank.	$563
4015-0179	Manual override control handle on officer's side for Waterous Monarch intake valve.	$373
4015-0180	6" Intake Akron Electric Valve and 9323 Controller with relief. Location: [#LOC].	$3,479
4015-0181	Pump cooler with .75" 1/4 lift lever turn valve.	$286
4015-0182	Engine cooler with .75" 1/4 lift lever turn valve.	$286
4015-0183	Test Port 1/4" Drain Valve.	$76
4015-0186	Trident Pump Primer W/3 Barrel Push Button Control. (In place of standard primer.)	$199
4015-0187	Anodes Pro System for Hale pump (QTY3), (1) discharge side and (2) intake side with one on each side of intake.	$599
4015-0188	Red Switch Cover on rear dump valve switches.	$13
4015-0191	Valve Monarch Electric - Waterous. Location:Front Intake with Elkhart Relief valve.	$4,678
4015-0193	Hale 3" Auto Fill w/Thief Inlet. Locate: [#LOC].	$6,078
4015-0204	Trident Manually operated master pump drain. The master drain shall be clearly marked and placed in accessible location on pump panel.	$155
4015-0209	Hale Fluid Primer IPOS.	$132
4015-0210	Pump cooler with Innovative Control 1/4 turn valve with "T" handle and label.	$154
4015-0212	Trident Automatic Pump Primer.(In place of standard primer.)	$834
4015-0214	Additional Darley Primer Valve. Located: [#LOC].	$943
4020-0001	Additional tank sump.	$305
4020-0006	Direct 1.0" Water Tank Fill with Akron Valve Terminate with .75 Hose Bib. Location: driver side pump panel	$767
4020-0014	Water tank fill tower to be 6" wide x 17" long. Required on HP100/CR100/92RM with 2.5" tank fill.	$105
4020-0042	Water tank notched at forward top face (overall tank capacity will be reduced). Notch along forward top face of tank for storage pan clearance.	$555
4020-0063	Tank sump dump box (1) each side for newton dump mounting.	$304
4020-0064	Tank sump dump box (1) at rear for newton dump mounting.	$304
4100-0033	30 gallon integral foam tank for [#LOC]. UPF Poly III [#COL] fill tower. Foam tank capacity will reduce the water tank capacity.	$1,076
4100-0034	10 gallon integral foam tank for [#LOC]. UPF Poly III [#COL] fill tower. Foam tank capacity will reduce the water tank capacity.	$923
4100-0035	20 gallon integral foam tank for [#LOC]. UPF Poly III [#COL] fill tower. Foam tank capacity will reduce the water tank capacity.	$993
4100-0036	40 gallon integral foam tank for [#LOC]. UPF Poly III [#COL] fill tower. Foam tank capacity will reduce the water tank capacity.	$1,173
4100-0037	50 gallon integral foam tank for [#LOC]. UPF Poly III [#COL] fill tower. Foam tank capacity will reduce the water tank capacity.	$1,257
4100-0038	100 gallon integral foam tank for [#LOC]. UPF Poly III [#COL] fill tower. Foam tank capacity will reduce the water tank capacity.	$2,336
4100-0052	expansion dome. Foam tank capacity will reduce the water tank capacity. Tank capacity is 500 US gallons / 416 Imperial gallons / 1892 Liters.	$7,228
4100-0053	30 Gallon external foam tank for [#LOC]. UPF Poly III [#COL]. Locate in storage pan.	$3,214
4100-0054	500 gallon "T" foam tank for class B foam. UPF Poly III Yellow fill tower. Foam tank capacity will reduce the water tank capacity. Tank capacity is 500 US gallons / 416 Imperial gallons / 1892 Liters.	$7,228
4100-0055	expansion dome. Foam tank capacity will reduce the water tank capacity. Tank capacity is 250 US gallons / 208 Imperial gallons / 946 Liters.	$3,667
4100-0058	25 gallon integral foam tank for [#LOC]. UPF Poly III [#COL] fill tower. Foam tank capacity will reduce the water tank capacity.	$1,068
4100-0059	230 Gallon integral foam tank for [#LOC]. UPF Poly III [#COL] fill tower. The fill tower shall include an expansion dome. Foam tank capacity will reduce the water tank capacity. Tank capacity is 230 US gallons / 191 Imperial gallons / 870 Liters.	$4,047
4100-0062	Label on Foam Tank to read "Class A Foam" or "Class B Foam" as necessary.	$28
4100-0064	30 Gallon external foam tank for [#LOC]. UPF Poly III [#COL] tower to be accessible from driver side. Includes bolt-on .187" diamond plate cover with end panel (if applicable) and cutout in top panel for fill tower. Locate in storage pan over pump offset to driver side.	$1,612
4110-0002	Foam tank (B) outlet. Includes 1" male adapter and connector (ship loose). Outlet location: [#LOC].	$913
4110-0004	Foam tank shutoff. 1/4 turn shut off on each connection to the foam tank - foam discharge, refill and sending unit. The Valves shall be located at the tank.	$714
4110-0005	Direct 1.5" Foam Tank Fill with Akron 1.5" Valve. A 1.5" FNST tank fill connection with rocker lug plug, and a replaceable .25" mesh strainer on the left pump panel.	$721
4110-0006	Foam tank outlet. Includes 1" male adaptor and connector (ship loose). Outlet location: [#LOC]	$912
4110-0009	TTP 4" WILLIAMS FOAM SINGLE	$9,537
4110-0011	1.5" Foam tank drain Akron manual valve.	$668
4110-0013	Foam tank outlet. Includes 1.5" MNST with cap. A 1.5" FNST fitting shall be included in the loose equipment . Outlet location: [#LOC].	$1,001
4110-0014	Foam tank (B) outlet. Includes 2" male adapter. Outlet location: [#LOC].	$1,322
4110-0015	Foam tank outlet. Includes 1" Female adaptor and connector (ship loose). Outlet location: [#LOC].	$912
4110-0017	Direct 1.5" Foam Tank Fill with Akron 1.5" Valve. A 1.5" FNST tank fill connection with rocker lug plug, and a replaceable .25" mesh strainer on left side pump panel.	$721
4405-0021	Booster reel - front bumper. Center between frame rails. Will hold 100' of 1" or 150' of 3/4" booster hose.	$6,015
4405-0026	Booster Reel Aluminum shall hold 100' of 1" or 150' of .75" Hose Reel installed in [#LOC]. A rewind switch shall be provided at the reel.	$2,578

4405-0053	One (1) booster reel to hold 200` of .75" hose (not included)shall be provided. Includes rollers mounted on compartment door and foot mounted rewind switch below forward area of compartment. Locate R2.	$3,238
4405-0056	Booster reel to hold up to 200' of .75" or 100' of 1" hose. Locate over L1 on compartment top offset forward.	$3,183
4405-0060	Booster reel Akron Elect valve with a 9315 controller to read pressure only- Behind Front of Cab. Center between frame rails. To hold 100' of 1"	$6,223
4405-0061	Akron Booster reel - front bumper. Center between frame rails. Will hold 150' of 1" or 250' of 3/4" booster hose.	$6,431
4405-0076	Booster Reel to hold up to 200' of .75" or 100' of 1" hose. Locate over R1 on compartment top offset forward.	$3,183
4405-0077	Booster Hose Reel 12 Volt. Shall hold 200' of .75" Booster Hose (Hose not included) Includes stirrup style rewind switch installed in [#LOC]	$2,596
4405-0090	Booster Reel with air actuated control at pump operator panel. Shall hold 200' of 1" Booster Hose (Hose not included) installed in [#LOC]	$2,480
4405-0095	Booster Hose Reel 12 Volt located on the floor of B1. Shall hold 200' of .75" Booster Hose (Hose not included). Includes rewind switch officers side of B1 wall close to opening for easy accessability.	$2,596
4405-0096	The booster reel manual crank shall have the crank handle extended an additional 12" beyond standard length.	$93
4405-0098	Booster Reel 100' X 1" or 150' x 0.75" hose (Hose not included), blow out valve included, model EF4026-19-20-8. Located: [#LOC].	$2,591
4405-0100	Booster reel rewind switch. Switch located [#LOC].	$113
4405-0113	Booster Hose Reel 12 Volt located dunnage pan offset to officer side. Shall hold 200' of .75" Booster Hose (Hose not included). Includes rewind switch officers side pump panel.	$2,596
4405-0115	Booster Reel. Reel to have capacity of 150' of 3/4" or 100' of 1" booster hose. Hose is sold seperately. Location: [#LOC].	$2,596
4405-0121	Akron Booster reel - front bumper. Center between frame rails. Will hold 150' of 1" or 250' of 3/4" booster hose. Include painted black Durabak cover and skid plate	$6,431
4405-0124	Booster Reel to hold up to 200' of .75" or 100' of 1" hose. Locate over R1/R2 on compartment top.	$3,183
4405-0130	Booster Reel 100' X 1" or 150' x 0.75" hose (Hose not included), blow out valve included, model EF4126-19-20-8. Located: [#LOC].	$2,591
4415-0008	1.5" front bumper discharge Akron manual valve.	$1,503
4415-0009	1.5" Front Bumper Discharge Hale Manual Valve	$1,603
4415-0010	1.5" Front Bumper Discharge Akron Electric Valve	$3,101
4415-0011	2.5" Front Bumper Discharge Akron Electric Valve	$3,252
4415-0012	1.5" crosslay with Akron manual valve. Location: [#LOC].	$936
4415-0014	2.5" Left Pump Panel Discharge Akron Manual Valve. Location: [#LOC].	$975
4415-0015	2.5" Left Panel Discharge Hale Manual Valve. Location: [#LOC]	$1,268
4415-0016	2.5" Right Pump Panel Discharge Akron Manual Valve. Location: [#LOC].	$1,083
4415-0017	2.5" Right Pump Panel Discharge Hale Manual Valve. Location: [#LOC]	$1,375
4415-0018	2.5" left front hose bed discharge Akron manual valve.	$1,409
4415-0019	2.5" Left Front Hosebed Discharge Hale Manual Valve	$1,646
4415-0028	2.5" Right Rear Discharge Akron Manual Valve. Location: [#LOC].	$1,139
4415-0029	2.5" Right Rear Discharge Hale Manual Valve Location: [#LOC]	$1,375
4415-0034	3" Right Pump Panel Discharge Akron Manual Valve (Waterous pumps noted location to be forward lower port). Location: [#LOC].	$1,565
4415-0035	3" Right Pump Panel Discharge Hale Manual Valve Location: [#LOC]	$1,920
4415-0036	3" Left Front Hose Bed Discharge Akron Manual Valve.	$2,045
4415-0037	3" Right Front Hose Bed Discharge Akron Manual Valve.	$2,045
4415-0041	3" Deck Gun Discharge, Akron manual valve.	$1,598
4415-0049	4" Pump Panel Discharge Hale Electric Valve Location: [#LOC]	$5,519
4415-0050	4" Pump Panel Discharge Akron Electric Valve (Waterous pumps noted location to be forward lower port). [#LOC]	$4,471
4415-0051	4" Waterway Discharge with 3" Akron Manual Valve.	$2,170
4415-0052	4" Waterway Discharge with 4" Akron Electric Valve	$4,472
4415-0053	4" Waterway Discharge with 3" Akron Electric Valve	$3,740
4415-0054	4" Right Pump Panel Discharge with 3" Akron Manual Valve (Waterous pumps noted location to be forward lower port). Location: [#LOC].	$1,841
4415-0057	5" Right Pump Panel Discharge with 3" Akron Manual Valve. Location: [#LOC].	$2,553
4415-0058	2.5" Crosslay Akron Manual Valve. Location: [#LOC].	$1,128
4415-0065	1.5" Double Speedlay with Akron Manual Valves.	$1,833
4415-0067	1.5" left front hose bed preconnect Akron manual valve.	$975
4415-0072	1.5" Right Rear Discharge Akron Manual Valve. Location: [#LOC].	$1,028
4415-0073	Triple Speedlay (2) 1.5" and (1) 2.5" with Akron Manual Valve.	$4,106
4415-0085	1.5" Crosslay w/2" Akron Electric Valve Location: [#LOC]	$2,727
4415-0086	2.5" Crosslay w/Akron Electric Valve. To be located rearward of 1.5" crosslay(s) if applicable. Location: [#LOC].	$3,134
4415-0088	1.5" Crosslay w/2" Akron Electric Valve & Navigator 9305 Location: [#LOC]	$5,102
4415-0089	2.5" Crosslay w/Akron Electric Valve & Navigator 9305. To be located rearward of 1.5" crosslay(s) if applicable. Location: [#LOC]	$5,928
4415-0099	3" Deck Gun Discharge Akron Electric Valve	$3,674
4415-0100	3" Deck Gun Discharge Akron Electric Valve & Navigator 9305	$6,542
4415-0102	1.5" Front Bumper Discharge Akron Electric Valve & Navigator 9305	$5,693
4415-0104	2.5" Front Bumper Discharge Akron Electric Valve & Navigator 9315	$6,610

4415-0106	1.5" Left Front Hosebed w/2" Akron Electric Valve	$2,789
4415-0107	2.5" Left Front Hosebed Akron Electric Valve	$3,420
4415-0109	1.5" Left Front Hosebed w/2" Akron Electric Valve & Navigator 9305	$5,164
4415-0110	2.5" Left Front Hosebed Akron Electric Valve & Navigator 9305	$6,290
4415-0124	2.5" Left Pump Panel Discharge Akron Electric Valve. Location: [#LOC]	$2,985
4415-0125	2.5" Left Pump Panel Discharge Akron Electric Valve & Navigator 9305. Location: [#LOC]	$5,856
4415-0127	2.5" Right Pump Panel Discharge Akron Electric Valve Location: [#LOC]	$2,985
4415-0128	3" Right Pump Panel Discharge Akron Electric Valve (Waterous pumps noted location to be forward lower port) Location: [#LOC]	$3,647
4415-0129	4" Right Pump Panel Discharge w/3" Akron Electric Valve (Waterous pumps noted location to be forward lower port) Location: [#LOC]	$3,923
4415-0130	5" Right Pump Panel Discharge w/3" Akron Electric Valve Location: [#LOC]	$4,632
4415-0131	2.5" Right Pump Panel Discharge Akron Electric Valve & Navigator 9305 Location: [#LOC]	$5,856
4415-0132	3" Right Pump Panel Discharge Akron Electric Valve & Navigator 9305 (Waterous pumps noted location to be forward lower port) Location: [#LOC]	$6,508
4415-0133	4" Pump Panel Discharge Akron Electric Valve & Navigator 9305 Location: [#LOC]	$7,897
4415-0134	4" Right Pump Panel Discharge w/3" Akron Electric Valve & Navigator 9305 Location: [#LOC]	$6,784
4415-0135	5" Right Pump Panel Discharge w/3" Akron Electric Valve & Navigator 9305 Location: [#LOC]	$7,496
4415-0149	1.5" Right Rear Discharge Akron Electric Valve Location: [#LOC]	$2,843
4415-0150	2.5" Right Rear Discharge Akron Electric Valve Location: [#LOC]	$3,151
4415-0152	1.5" Right Rear Discharge Akron Electric Valve & Navigator 9305 Location: [#LOC]	$5,219
4415-0153	2.5" Right Rear Discharge Akron Electric Valve & Navigator 9305 Location: [#LOC]	$6,019
4415-0161	2.5" Left Panel Discharge Akron Manual Valve w/30 Degree Chrome Droop. Location: [#LOC].	$1,224
4415-0162	2.5" Left Panel Discharge Akron Electric Valve w/30 Degree Chrome Droop. Location: [#LOC].	$3,236
4415-0163	2.5" Left Panel Dishcarge Akron Electric Valve & Navigator 9305 w/30 Degree Droop Location: [#LOC]	$6,106
4415-0164	2.5" Right Panel Discharge Akron Manual Valve w/30 Degree Chrome Droop. Location: [#LOC].	$1,224
4415-0165	3" Right Panel Discharge Akron Manual Valve w/30 Degree Chrome Droop. (Waterous pumps noted if location is forward of steamer use lower discharge port.) Location: [#LOC].	$1,870
4415-0166	2.5" Right Panel Discharge Akron Electric Valve w/30 Degree Chrome Droop Location: [#LOC]	$3,236
4415-0167	3" Right Panel Discharge Akron Electric Valve w/30 Degree Chrome Droop (Waterous pumps noted location to be forward lower port) Location: [#LOC]	$3,951
4415-0168	2.5" Right Panel Discharge Akron Electric Valve & Navigator 9305 w/30 Degree Droop Location: [#LOC]	$6,106
4415-0169	3" Right Panel Discharge Akron Electric Valve & Navigator 9305 w/30 Degree Droop (Waterous pumps noted location to be forward lower port) Location: [#LOC]	$6,814
4415-0171	3" Auxillary Waterway Discharge Akron Manual Valve. Plumbed from foam manifold and "Y" into w/way pipe downstream from main w/way discharge valve.	$1,165
4415-0172	2.5" Auxillary Waterway Discharge Akron Manual Valve. Plumbed from foam manifold and "Y" into w/way pipe downstream from main w/way discharge valve.	$1,096
4415-0179	2.5" Auxiliary Deck Gun Discharge Akron Valve for use with CAFS System.Plumbed from foam manifold and "Y" into Deck Gun pipe downstream from main Deck Gun discharge valve.	$1,896
4415-0180	2.5" Auxillary Waterway Discharge Hale Manual Valve. Plumbed from foam manifold and "Y" into w/way pipe downstream from main w/way discharge valve.	$1,339
4415-0181	3" Auxillary waterway discharge Hale Manual Valve. Plumbed from foam manifold and "Y" into w/way pipe downstream from main w/way discharge valve.	$1,365
4415-0184	3" Deck Gun Discharge Hale Manual Valve	$1,793
4415-0187	1.5" Crosslay with Hale Manual Valve Location: [#LOC]	$1,801
4415-0189	2.5" Crosslay with Hale Manual Valve Location: [#LOC]	$2,429
4415-0192	4" Waterway Discharge with 3" Hale Manual Valve	$2,529
4415-0194	2.5" front bumper discharge Akron manual valve.	$1,727
4415-0195	4" Right Pump Panel Discharge with 3" Hale Manual Valve Location: [#LOC]	$2,198
4415-0196	5" Right Pump Panel Discharge with 3" Hale Manual Valve Location: [#LOC]	$2,912
4415-0197	2.5" Left Panel Discharge Hale Manual Valve with Droop. Location: [#LOC]	$1,517
4415-0198	2.5" Right Pump Panel Discharge Hale Manual Valve with droop. Location: [#LOC]	$1,622
4415-0199	3" Right Pump Panel Discharge Hale Manual Valve with Droop Location: [#LOC]	$2,218
4415-0204	1.5" Crosslay with Hale Electric Valve Location: [#LOC]	$3,248
4415-0205	2.5" Crosslay with Hale Electric Valve Location: [#LOC]	$4,005
4415-0209	3" Deck Gun Discharge Hale Electric Valve	$3,956
4415-0210	2.5" Auxiliary Deck Gun Discharge Hale Valve for use with CAFS System	$4,059
4415-0211	2.5" Front Bumper Discharge Hale Manual Valve	$1,779
4415-0212	1.5" Front Bumper Discharge Hale Electric Valve	$3,049
4415-0213	2.5" Front Bumper Discharge Hale Electric Valve	$3,355
4415-0214	1.5" Left Front Hosebed Discharge Hale Manual Valve	$1,114
4415-0215	3" Left Front Hosebed Discharge Hale Manual Valve	$2,241
4415-0216	1.5" Left Front Hosebed Discharge Hale Electric Valve	$2,559
4415-0217	2.5" Left Front Hosebed Discharge Hale Electric Valve	$3,222
4415-0218	3" Left Front Hosebed Discharge Hale Electricl Valve	$4,404
4415-0227	2.5" Left Panel Discharge Hale Electric Valve. Location: [#LOC]	$2,842
4415-0228	2.5" Left Panel Discharge Hale Electric Valve with Droop. Location: [#LOC]	$3,089
4415-0232	2.5" Right Pump Panel Discharge Hale Electric Valve. Location: [#LOC]	$2,950
4415-0233	2.5" Right Pump Panel Discharge Hale Electric Valve with droop. Location: [#LOC]	$3,197
4415-0234	3" Right Pump Panel Discharge Hale Electric Valve Location: [#LOC]	$4,084
4415-0235	3" Right Pump Panel Discharge Hale Electric Valve with Droop Location: [#LOC]	$4,382

4415-0236	4" Right Pump Panel Discharge with 3" Hale Electric Valve Location: [#LOC]	$4,360
4415-0237	5" Right Pump Panel Discharge with 3" Hale Electric Valve Location: [#LOC]	$5,073
4415-0243	1.5" Right Rear Discharge Hale Manual Valve Location: [#LOC]	$1,130
4415-0244	3" Right Rear Discharge Hale Manual Valve Location: [#LOC]	$1,955
4415-0245	1.5" Right Rear Discharge Hale Electric Valve Location: [#LOC]	$2,576
4415-0246	2.5" Right Rear Discharge Hale Electric Valve Location: [#LOC]	$2,950
4415-0247	3" Right Rear Discharge Hale Electric Valve Location: [#LOC]	$4,119
4415-0248	1.5" Crosslay Elkhart Manual Valve Location: [#LOC].	$989
4415-0249	2.5" Crosslay Elkhart Manual Valve. To be located rearward of 1.5" crosslay(s) if applicable. Location: [#LOC]	$1,270
4415-0250	1.5" Crosslay w/2" Elkhart Electric Valve Location: [#LOC]	$2,186
4415-0251	2.5" Crosslay w/Elkhart Electric Valve. To be located rearward of 1.5" crosslay(s) if applicable. Location: [#LOC]	$2,669
4415-0258	4" Waterway Discharge with 3" Hale Electric Valve	$4,334
4415-0259	4" Waterway Discharge with 4" Hale Electric Valve	$5,480
4415-0260	4" Waterway Discharge with 3" Elkhart Manual Valve	$2,382
4415-0261	4" Waterway Discharge with 3" Elkhart Electric Valve	$3,757
4415-0262	4" Waterway Discharge with 4" Elkhart Electric Valve	$5,673
4415-0263	3" Auxillary Waterway Discharge Elkhart Manual Valve. Plumbed from foam manifold and "Y" into w/way pipe downstream from main w/way discharge valve.	$1,374
4415-0264	2.5" Auxillary Waterway Discharge Elkhart Manual Valve. Plumbed from foam manifold and "Y" into w/way pipe downstream from main w/way discharge valve.	$1,242
4415-0265	3" Deck Gun Discharge Elkhart Manual Valve w/RC-10 Controller.	$1,807
4415-0266	3" Deck Gun Discharge Elkhart Electric Valve	$3,182
4415-0267	2.5" Auxiliary Deck Gun Discharge Elkhart Valve for use with CAFS System	$2,041
4415-0268	1.5" Front Bumper Discharge Elkhart Manual Valve	$1,580
4415-0269	2.5" Front Bumper Discharge Elkhart Manual Valve	$1,872
4415-0270	1.5" Front Bumper Discharge Elkhart Electric Valve	$2,775
4415-0271	2.5" Front Bumper Discharge Elkhart Unibody Electric Valve	$3,271
4415-0272	1.5" Left Front Hosebed Preconnect Elkhart Manual Valve	$1,051
4415-0273	2.5" Left Front Hosebed Discharge Elkhart Manual Valve	$1,552
4415-0274	3" Left Front Hosebed Discharge Elkhart Manual Valve	$2,257
4415-0275	1.5" Left Front Hosebed w/2" Elkhart Electric Valve	$2,247
4415-0276	2.5" Left Front Hosebed Elkhart Electric Valve	$2,950
4415-0280	3" Right Front Hosebed Discharge Elkhart Manual Valve	$2,257
4415-0285	4" Pump Panel Discharge Elkhart Electric Valve (Waterous pumps noted location to be forward lower port) Location: [#LOC].	$4,665
4415-0286	5" Pump Panel Discharge with 4" Akron Electric Valve Location: [#LOC]	$5,097
4415-0287	5" Pump Panel Discharge with 4" Hale Electric Valve Location: [#LOC]	$6,106
4415-0288	5" Pump Panel Discharge with 4" Elkhart Electric Valve Location: [#LOC]	$5,291
4415-0289	2.5" Left Pump Panel Discharge Elkhart Manual Valve. Location: [#LOC]	$1,119
4415-0290	2.5" Left Panel Discharge Elkhart Manual Valve w/45 Degree Droop. Location: [#LOC].	$1,369
4415-0292	2.5" Left Pump Panel Discharge Elkhart Electric Valve. Location: [#LOC]	$2,518
4415-0293	2.5" Left Panel Discharge Elkhart Electric Valve w/45 Degree Droop Location: [#LOC]	$2,768
4415-0299	2.5" Right Pump Panel Discharge Elkhart Manual Valve. Location: [#LOC].	$1,224
4415-0300	2.5" Right Panel Discharge Elkhart Manual Valve w/45 Degree Droop. Location: [#LOC].	$1,369
4415-0301	3" Right Pump Panel Discharge Elkhart Manual Valve Location: [#LOC]	$1,776
4415-0302	4" Right Pump Panel Discharge with 3" Elkhart Manual Valve w/RC-10 Control w/lights. Location: [#LOC].	$2,051
4415-0303	5" Right Pump Panel Discharge with 3" Elkhart Manual Valve Location: [#LOC]	$2,763
4415-0304	2.5" Right Pump Panel Discharge Elkhart Electric Valve Location: [#LOC]	$2,624
4415-0305	2.5" Right Panel Discharge Elkhart Electric Valve w/45 Degree Droop Location: [#LOC]	$2,768
4415-0306	3" Right Pump Panel Discharge Elkhart Electric Valve Location: [#LOC]	$3,152
4415-0307	4" Right Pump Panel Discharge w/3" Elkhart Electric Valve (Waterous pumps noted location to be forward lower port) Location: [#LOC]	$3,428
4415-0308	5" Right Pump Panel Discharge w/3" Elkhart Electric Valve Location: [#LOC]	$4,138
4415-0315	1.5" Right Rear Discharge Elkhart Manual Valve Location: [#LOC]	$1,104
4415-0316	2.5" Right Rear Discharge Elkhart Manual Valve. Location: [#LOC].	$1,283
4415-0318	1.5" Right Rear Discharge Elkhart Electric Valve Location: [#LOC]	$2,301
4415-0319	2.5" Right Rear Discharge Elkhart Electric Valve Location: [#LOC]	$2,680
4415-0370	Second 1.5" Front Bumper Discharge Akron Manual Valve.	$1,503
4415-0371	Second 1.5" Front Bumper Discharge Hale Manual Valve	$1,603
4415-0372	Second 1.5" Front Bumper Discharge Akron Electric Valve	$3,101
4415-0373	Second 2.5" Front Bumper Discharge Akron Electric Valve	$3,252
4415-0374	Second 1.5" Front Bumper Discharge Akron Electric Valve & Navigator 9305	$5,693
4415-0376	Second 2.5" Front Bumper Discharge Akron Electric Valve & Navigator 9305	$6,610
4415-0378	Second 2.5" Front Bumper Discharge Akron Manual Valve	$1,727
4415-0379	Second 2.5" Front Bumper Discharge Hale Manual Valve	$1,779
4415-0380	Second 1.5" Front Bumper Discharge Hale Electric Valve	$3,049
4415-0381	Second 2.5" Front Bumper Discharge Hale Electric Valve	$3,355
4415-0382	Second 1.5" Front Bumper Discharge Elkhart Manual Valve	$1,580
4415-0383	Second 2.5" Front Bumper Discharge Elkhart Manual Valve	$1,872
4415-0384	Second 1.5" Front Bumper Discharge Elkhart Electric Valve	$2,775
4415-0385	Second 2.5" Front Bumper Discharge Elkhart Electric Valve	$3,271

4415-0391	4" Deck Gun Discharge Akron Electric Valve.	$5,308
4415-0392	4" Deck Gun Discharge Hale Electric Valve	$6,286
4415-0393	4" Deck Gun Discharge Elkhart Electric Valve	$5,496
4415-0397	4" Officer side discharge. Foward of steamer and includes 30 degree droop, 4" Akron full flow valve with 4" driver side hand wheel control.	$3,679
4415-0399	1.5" Crosslay w/2" Akron Valve Handwheel Control Location: [#LOC]	$1,929
4415-0400	1.5" Crosslay w/2" Elkhart Unibody Valve Handwheel Control Location: [#LOC]	$1,978
4415-0401	2.5" Crosslay w/Akron Valve Handwheel Control. To be located rearward of 1.5" crosslay(s) if applicable. Location: [#LOC]	$2,119
4415-0402	2.5" Crosslay w/Elkhart Unibody Valve Handwheel Control. To be located rearward of 1.5" crosslay(s) if applicable. Location: [#LOC]	$2,167
4415-0403	3" Deck Gun Discharge Akron Valve Handwheel Control.	$2,589
4415-0404	3" Deck Gun Discharge Elkhart Valve Handwheel Control	$2,638
4415-0405	1.5" Front Bumper Discharge Akron Valve Handwheel Control	$2,497
4415-0406	1.5" Front Bumper Discharge Elkhart Unibody Valve Handwheel Control	$2,544
4415-0407	2.5" Front Bumper Discharge Akron Valve Handwheel Control	$2,720
4415-0408	2.5" Front Bumper Discharge Elkhart Valve Handwheel Control	$2,769
4415-0409	1.5" Left Front Hosebed Preconnect AkronValve Handwheel Control	$1,967
4415-0410	1.5" Left Front Hosebed Preconnect Elkhart Valve Handwheel Control	$2,016
4415-0411	2.5" Left Front Hosebed Discharge Akron Valve Handwheel Control	$2,401
4415-0412	2.5" Left Front Hosebed Discharge Elkhart Valve Handwheel Control	$2,449
4415-0413	3" Left Front Hosebed Discharge Akron Valve Handwheel Control	$3,038
4415-0414	3" Left Front Hosebed Discharge Elkhart Valve Handwheel Control	$3,086
4415-0419	3" Right Front Hosebed Discharge Akron Valve Handwheel Control	$3,038
4415-0420	3" Right Front Hosebed Discharge Elkhart Valve Handwheel Control	$3,086
4415-0421	4" Pump Panel Discharge Akron Valve Handwheel Control. (Waterous pumps noted location to be forward lower port.) Location: [#LOC].	$3,740
4415-0423	5" Right Pump Panel Discharge with 4" Akron Valve Handwheel Control	$4,368
4415-0424	5" Right Pump Panel Discharge with 4" Elkhart Valve Handwheel Control	$4,440
4415-0425	2.5" Right Pump Panel Discharge Akron Valve Handwheel Control. Location: [#LOC]	$2,076
4415-0426	2.5" Right Pump Panel Discharge Elkhart Valve Handwheel Control. Location: [#LOC]	$2,122
4415-0427	2.5" Right Panel Discharge Akron Valve Handwheel Control w/30 Degree Droop Location: [#LOC]	$2,217
4415-0428	2.5" Right Panel Discharge Elkhart Valve Handwheel Control w/30 Degree Droop Location: [#LOC]	$2,266
4415-0429	3" Right Pump Panel Discharge Akron Valve Handwheel Control (Waterous pumps noted location to be forward lower port). Location: [#LOC].	$2,558
4415-0430	3" Right Pump Panel Discharge Elkhart Valve Handwheel Control Location: [#LOC]	$2,606
4415-0431	3" Right Panel Discharge Akron Valve Handwheel Control w/Droop. Location:(Waterous pumps noted location to be forward lower port) [#LOC].	$2,863
4415-0432	4" Right Panel Discharge w/3" Akron Valve Handwheel Control. Location: [#LOC].	$2,835
4415-0433	4" Right Panel Dischargew/3" Elkhart Unibody Valve Handwheel Control Location: [#LOC]	$2,883
4415-0434	5" Right Pump Panel Discharge with 3" Akron Valve Handwheel Control Location: [#LOC]	$3,545
4415-0435	5" Right Pump Panel Discharge with 3" Elkhart Valve Handwheel Control Location: [#LOC]	$3,594
4415-0443	1.5" Right Rear Discharge Akron Valve Handwheel Control Location: [#LOC]	$2,021
4415-0444	1.5" Right Rear Discharge Elkhart Valve Handwheel Control Location: [#LOC]	$2,068
4415-0445	2.5" Right Rear Discharge Akron Valve Handwheel Control Location: [#LOC]	$2,132
4415-0446	2.5" Right Rear Discharge Elkhart Unibody Valve Handwheel Control Location: [#LOC]	$2,179
4415-0451	4" Waterway Discharge with 3" Akron Valve Handwheel Control.	$3,162
4415-0452	4" Waterway Discharge with 3" Elkhart Valve Handwheel Control	$3,210
4415-0453	4" Waterway Discharge Akron Valve Handwheel Control	$3,741
4415-0454	4" Waterway Discharge Elkhart Valve Handwheel Control	$3,816
4415-0455	Second 1.5" Front Bumper Discharge Akron Valve Handwheel Control	$2,497
4415-0456	Second 1.5" Front Bumper Discharge Elkhart Valve Handwheel Control	$2,544
4415-0457	Second 2.5" Front Bumper Discharge Akron Valve Handwheel Control	$2,720
4415-0458	Second 2.5" Front Bumper Discharge Elkhart Valve Handwheel Control	$2,769
4415-0474	1.5" Right Discharge Akron Valve in Runningboard Hose Tray, [#LOC].	$975
4415-0489	2.5" Auxillary Waterway Discharge Akron Elect Valve. Plumbed from foam manifold and "Y" into w/way pipe downstream from main w/way discharge valve.	$3,301
4415-0491	2.5" Left Panel Discharge Elkhart Manual UnibodyValve w/30 Degree Chrome Droop. Location: [#LOC].	$1,339
4415-0492	2.5" Right Panel Discharge Elkhart Manual UnibodyValve w/30 Degree Chrome Droop. Location: [#LOC].	$1,364
4415-0493	1.5" Crosslay w/2" Elkhart Unibody Manual Valve. Location: [#LOC].	$989
4415-0494	1.5" Crosslay w/2" Elkhart Unibody Electric Valve UBEC3 to read flow, and pressure. Location: [#LOC]	$4,803
4415-0495	2.5" Right Panel Discharge Elkhart Hand Wheel Control UnibodyValve w/30 Degree Chrome Droop Location: [#LOC]	$2,195
4415-0496	3" Deck Gun Discharge Elkhart Unibody Valve Handwheel Control	$2,546
4415-0497	4" Pump Discharge Elkhart Electric UBEC3 Valve to read flow, and pressure. Location: [#LOC]	$6,266
4415-0498	1.5" Right Rear Discharge Elkhart Electric UBEC3 Valve to read flow, and pressure. Location: [#LOC]	$4,658
4415-0499	2.5" Right Rear Discharge Elkhart Electric UBEC3 Valve to read flow, and pressure. Location: [#LOC]	$5,413
4415-0500	1.5" Front Bumper Discharge Elkhart Electric UBEC3 Valve to read flow, and pressure.	$4,939
4415-0502	1.5" Front Bumper Discharge Akron Manual Valve without Blowout	$1,503
4415-0504	2.5" Right Panel Discharge Elkhart Manual UnibodyValve Location: [#LOC]	$1,250

4415-0505	2.5" Left Panel Discharge Elkhart Manual UnibodyValve Location: [#LOC]	$1,223
4415-0506	2.5" Right Panel Discharge Elkhart Hand Wheel Control UnibodyValve Location: [#LOC]	$2,081
4415-0509	2.5" Auxillary Waterway Discharge Akron Hand Wheel Valve. Plumbed from foam manifold and "Y" into w/way pipe downstream from main w/way discharge valve.	$2,288
4415-0514	4" Officer side discharge. Foward of steamer and includes 30 degree droop, 4" Elkhart Elect Control full flow valve.	$4,832
4415-0515	Front jumpline swivel to be recess so WYE valve will clear rise lid and tray.	$159
4415-0516	4" Right Panel Discharge w/ 3" Akron Valve Handwheel Control w/Droop Location: [#LOC]	$3,147
4415-0517	4" Right Pump Panel Discharge with 3" Akron Manual Valve w/Droop. Location: [#LOC].	$2,146
4415-0518	4" Right Panel Discharge w/ 3" Akron Valve Electric w/Droop (Waterous pumps noted location to be forward lower port) Location: [#LOC]	$4,228
4415-0519	4" Right Pump Panel Discharge w/3" Akron Electric Valve & Navigator 9305 with 30 Degree Droop Location: [#LOC]	$7,090
4415-0520	4" Right Pump Panel Discharge with 3" Hale Manual Valve with 30 Degree Droop Location: [#LOC]	$2,503
4415-0521	4" Right Pump Panel Discharge with 3" Hale Electric Valve with 30 Degree Droop Location: [#LOC]	$4,665
4415-0523	5" Right Panel Discharge w/4" Elkhart Electric UBEC3 Valve to read flow, and pressure. Location: [#LOC]	$6,543
4415-0524	3" Deck Gun Discharge Elkhart Unibody Manual Valve.	$1,800
4415-0525	1.5" Front Bumper Discharge Elkhart Unibody Manual Valve.	$1,580
4415-0527	1.5" Crosslay w/2" Elkhart Electric Unibody UBEC1 Valve Location: [#LOC]	$2,727
4415-0528	2.5" Left Pump Panel Discharge Elkhart Unibody Electric Valve. Location: [#LOC]	$2,985
4415-0529	3" Right Pump Panel Discharge Elkhart Unibody Electric Valve Location: [#LOC]	$3,647
4415-0530	4" Pump Panel Discharge Elkhart UBEC1 Electric Valve (Waterous pumps noted location to be forward lower port). Location: [#LOC].	$4,471
4415-0531	4" Pump Panel Discharge Akron Electric Valve with 30 Degree Droop (Waterous pumps noted location to be forward lower port) Location: [#LOC]	$4,762
4415-0532	4" Waterway Discharge with 4" Elkhart Unibody Electric Valve	$4,472
4415-0536	5" Right Pump Panel Discharge with 4" Akron Valve Handwheel Control. Location: [#LOC].	$3,758
4415-0537	2.5" Crosslay Elkhart Unibody Manual Valve. To be located rearward of 1.5" crosslay(s) if applicable. Location: [#LOC]	$1,327
4415-0541	3" Deck Gun Discharge Elkhart Unibody Manual Valve.	$1,698
4415-0542	Second 1.5" Front Bumper Discharge Elkhart Unibody Manual Valve	$1,580
4415-0545	5" Pump Panel Discharge with 4" Elkhart UBEC1 Electric Valve Location: [#LOC]	$5,291
4415-0546	4" Waterway Discharge with 3" Elkhart Unibody Valve Handwheel Control	$3,210
4415-0547	2.5" Front Bumper Discharge Elkhart Unibody Manual Valve	$1,872
4415-0548	3" Auxillary Waterway Discharge Elkhart Unibody Manual Valve. Plumbed from foam manifold and "Y" into w/way pipe downstream from main w/way discharge valve.	$1,154
4415-0549	1.5" Front Bumper Discharge Elkhart Electric UBEC1 Valve	$3,191
4415-0552	1.5" Front Bumper Crosslay Discharge Akron Manual Valve.	$2,110
4415-0553	2.5" Left Front Hosebed Discharge Akron Manual Valve located outlet shall be located 13.625" from inside hosebed wall.	$1,409
4415-0555	3" Deck Gun Discharge Akron Manual Valve with no Plumbing from the valve to deck gun channel Dealer to install Extend-A-Gun and Plumbing from the valve to the channel..	$1,483
4415-0556	4" Waterway Discharge with 4" Akron Electric Valve & Navigator 9305 Control	$7,485
4415-0559	5" Right Pump Panel Discharge with 4" Elkhart Unibody Valve Handwheel Control Location: [#LOC]	$4,004
4415-0561	2.5" Left Panel Discharge Akron Electric Valve w/30 Degree Droop Location: [#LOC]	$3,236
4415-0562	3" Right Pump Panel Discharge Akron Electric Valve w/30degree Droop (Waterous pumps noted location to be forward lower port) Location: [#LOC]	$3,814
4415-0563	2.5" Right Panel Discharge Akron Electric Valve w/30 Degree Droop Location: [#LOC]	$3,236
4415-0564	3" Right Pump Panel Discharge Elkhart Electric Valve w/30degree Droop Location: [#LOC]	$3,814
4415-0565	4" Waterway Discharge with 5" Elkhart Electric Valve	$5,783
4415-0566	1.5" crosslay w/2" Akron electric valve. Location: [#LOC].	$2,727
4415-0567	2.5" Crosslay w/Akron Electric Valve. To be located rearward of 1.5" crosslay(s) if applicable. Location: [#LOC].	$3,134
4415-0568	3" deck gun discharge Akron electric valve.	$3,674
4415-0569	4" deck gun discharge Akron electric valve.	$5,308
4415-0570	1.5" Front Bumper Discharge Akron Electric Valve.	$3,101
4415-0571	Second 1.5" Front Bumper Discharge Akron Electric Valve	$3,101
4415-0572	2.5" Front Bumper Discharge Akron Electric Valve	$3,252
4415-0573	Second 2.5" Front Bumper Discharge Akron Electric Valve	$3,252
4415-0574	2.5" Left Pump Panel Discharge Akron Electric Valve. Location: [#LOC].	$2,985
4415-0575	2.5" Left Panel Discharge Akron Electric Valve w/30 Degree Droop. Location: [#LOC].	$2,985
4415-0576	4" Pump Panel Discharge Akron Electric Valve. (Waterous pumps noted location to be forward lower port.) Location: [#LOC].	$4,471
4415-0577	5" Pump Panel Discharge with 4" Akron Electric Valve. Location: [#LOC].	$5,097
4415-0582	1.5" Right Rear Discharge Akron Electric Valve Location: [#LOC]	$2,843
4415-0583	2.5" Right Rear Discharge Akron Electric Valve. Location: [#LOC].	$3,151
4415-0586	2.5" Right Pump Panel Discharge Akron Electric Valve. Location: [#LOC].	$2,985
4415-0587	3" Right Pump Panel Discharge Akron Electric Valve. Location: [#LOC].	$3,647
4415-0588	4" Right Pump Panel Discharge w/3" Akron Electric Valve (Waterous pumps noted location to be forward lower port) Location: [#LOC]	$3,923

4415-0589	5" Right Pump Panel Discharge w/3" Akron Electric Valve. Location: [#LOC].	$4,632
4415-0590	2.5" Right Panel Discharge Akron Electric Valve w/30 Degree Droop. Location: [#LOC].	$3,236
4415-0591	3" Right Panel Discharge Akron Electric Valve w/30 Degree Droop (Waterous pumps noted location to be forward lower port). Location: [#LOC].	$3,951
4415-0592	4" Right Panel Discharge w/3" Akron valve electric w/droop (Waterous pumps noted location to be forward lower port). Location: [#LOC].	$4,228
4415-0593	3" Right Pump Panel Discharge Akron Electric Valve w/30degree Droop (Waterous pumps noted location to be forward lower port) Location: [#LOC]	$3,814
4415-0594	2.5" Right Panel Discharge Akron Electric Valve w/30 Degree Droop Location: [#LOC]	$3,236
4415-0595	1.5" Left Front Hosebed w/2" Akron Electric Valve	$2,789
4415-0596	2.5" Left Front Hose Bed Akron Electric Valve.	$3,420
4415-0601	1.5" Crosslay w/2" Akron Electric Valve Location: [#LOC]	$2,727
4415-0612	4" waterway discharge with 3" Akron electric valve.	$3,740
4415-0613	4" waterway discharge with 4" Akron electric valve.	$4,472
4415-0617	2.5" Left Panel Discharge Akron Manual 3" Valve w/30 Degree Droop. Location: [#LOC].	$1,565
4415-0618	2.5" Auxillary Deck Gun Discharge Manual Valve. Plumbed from foam manifold and "Y" into Deck Gun pipe downstream from main Deck Gun discharge valve.	$1,096
4415-0619	4" Right Pump Panel Discharge with 3" Akron Manual Valve. The 4" NST threads shall be a integral part of the valve. (Waterous pumps noted location to be forward lower port.) Location: [#LOC].	$1,841
4415-0621	3" Left Front Hosebed Discharge Elkhart Unibody Manual Valve	$2,257
4415-0622	3" Right Front Hosebed Discharge Elkhart Unibody Manual Valve	$2,257
4415-0627	3" Deck Gun Discharge Elkhart Electric Unibody UBEC3Valve to read flow, and pressure.	$5,627
4415-0628	5" Pump Panel Discharge Elkhart Electric UBEC3 Valve to read flow, and pressure. Location; [#LOC]	$5,896
4415-0629	2.5" Right Rear Discharge Elkhart Unibody Manual Valve Location: [#LOC]	$1,283
4415-0632	1.5" Left Front Hose Bed Preconnect Elkhart Unibody Manual Valve.	$1,051
4415-0636	4" Right Pump Panel Discharge with 3" Elkhart Unibody Manual Valve. (Waterous pumps noted location to be forward lower port.) Location: [#LOC].	$2,051
4415-0651	4" Waterway Discharge with 4" Akron Electric Valve with Digital Flow Meter.	$5,365
4415-0659	2.5" Left Pump Panel Discharge Elkhart Unibody Electric Valve with Droop. Location: [#LOC]	$3,108
4415-0660	2.5" Right Panel Discharge Elkhart Unibody Electric Valve w/Droop Location: [#LOC]	$3,107
4415-0661	4" Right Pump Panel Discharge w/3" Elkhart Electric Unibody Valve (Waterous pumps noted location to be forward lower port) Location: [#LOC]	$3,521
4415-0662	3" Deck Gun Discharge Elkhart Electric Unibody Valve	$3,674
4415-0665	1.5" Front Bumper Discharge Akron Electric Valve & Navigator 9315	$5,693
4415-0667	2.5" Left Panel Dishcarge Akron Electric Valve & Navigator 9315 w/30 Degree Droop Location: [#LOC]	$5,493
4415-0668	2.5" Right Panel Discharge Akron Electric Valve & Navigator 9315 w/30 Degree Droop Location: [#LOC]	$5,493
4415-0670	3" Right Panel Discharge Akron Electric Valve & Navigator 9315 w/30 Degree Droop (Waterous pumps noted location to be forward lower port) Location: [#LOC]	$6,399
4415-0719	3" Deck Gun Discharge Akron Electric Valve & Navigator 9315	$6,542
4415-0720	4" Right Pump Panel Discharge w/3" Akron Electric Valve & Navigator 9315 (Waterous pumps noted location to be forward lower port) Location: [#LOC]	$6,784
4415-0722	3" Deck Gun Discharge Akron Electric Valve with a 9315 valve controller with pressure reading only. [#LOC]	$4,091
4415-0723	4" Discharge Akron Electric Valve & Navigator 9315 (Waterous pumps noted location to be forward lower port). Location: [#LOC].	$7,897
4415-0724	4" Rear Mount Discharge w/3" Akron 9315 Electric Valve to read Flow and Pressure with 30 degree droop (Waterous pumps noted location to be forward lower port) Location: [#LOC]	$6,784
4415-0725	4" Rear Mount Discharge w/3" Akron 9315 Electric Valve to read Pressure (Waterous pumps noted location to be forward lower port) Location: [#LOC]	$3,872
4415-0726	1.5" Front Bumper Discharge Akron Electric Valve & Navigator 9315 with Pressue Reading only.	$3,473
4415-0727	1.5" Crosslay w/2" Akron Electric Valve & Navigator 9315 to Read Pressure only Location: [#LOC]	$3,232
4415-0728	2.5" Rear Mount Discharge Akron Electric Valve & Navigator 9315 to Read Pressure only. Location: [#LOC]	$3,390
4415-0730	2.5" Left Rear Discharge UBEC3 Electric Valve to read flow, and pressure. Location: [#LOC]	$5,413
4415-0731	2.5" Left Pump Panel Discharge UBEC3 Electric Valve with 30 degree droop to read flow, and pressure. Location: [#LOC]	$5,382
4415-0732	2.5" Right Pump Panel Discharge UBEC3 Electric Valve with 30 degree droop to read flow, and pressure. Location: [#LOC]	$5,382
4415-0733	4.5" Right Pump Panel Discharge with 3" Akron Manual Valve w/Droop Location: right side discharge 1 [#LOC]	$2,334
4415-0739	3" Right Pump Panel Discharge Elkhart Electric Valve w/30degree Droop to Terminate with 2.5" MNST w/cap Location: [#LOC]	$3,814
4415-0744	2.5" Crosslay w/2.5" Akron Electric Valve & Navigator 9315 to Read Pressure only Location: [#LOC]	$3,745
4415-0745	2.5" Left Panel Discharge Akron Electric 9315 Navigator Valve w/30 Degree Droop to Read Pressure only Location: [#LOC]	$3,720
4415-0746	2.5" Right Panel Discharge Akron Electric 9315 Navigator Valve w/30 Degree Droop to Read Pressure only Location: [#LOC]	$3,720
4415-0747	4" Pump Panel Discharge Akron Electric Navigator 9315 Valve (Read Pressure only) Location: [#LOC]	$4,897

4415-0748	4" Waterway Discharge with 4" Akron Electric Navigator 9315 Valve (Read Pressure only)	$4,866
4415-0751	2.5" Crosslay Elkhart UBEC3 Electric Valve to read flow, and pressure.. To be located rearward of 1.5" crosslay(s) if applicable. Location: [#LOC]	$5,259
4415-0752	4" Waterway Discharge with 4" Elkhart UBEC3 Valve to read flow, and pressure.	$7,008
4415-0757	1.5" Front Bumper Discharge Elkhart Electric UBEC3 Valve to read flow, and pressure.	$5,172
4415-0758	Left Front Hosebed Discharge 2.5" Elkhart Unibody UBEC3 Valve to read flow, and pressure.	$5,344
4415-0759	Right Front Hosebed Discharge 2.5" Elkhart Unibody UBEC3 Valve to read flow, and pressure.	$5,344
4415-0760	2.5" Front Bumper Discharge Akron Manual Valve without Blowout.	$1,727
4415-0762	4" Pump Panel Discharge Akron Electric Valve with 30 Degree Droop. Location: [#LOC].	$4,762
4415-0767	2.5" Right Panel Discharge Akron Manual 3" Valve w/30 Degree Droop Location: [#LOC]	$1,565
4415-0768	2.5" Crosslay w/Akron Electric Valve & Navigator 9315. To be located rearward of 1.5" crosslay(s) if applicable. Location: [#LOC]	$5,928
4415-0771	4" Deck Gun Discharge Akron Electric Valve & Navigator 9315	$6,632
4415-0772	4" Deck Gun Discharge Elkhart Electric Unibody Valve	$5,496
4415-0773	2.5" Right Pump Panel Discharge w/3" Elkhart Electric Unibody Valve and 30degree Droop [#LOC]	$3,814
4415-0776	2.5" Left Pump Panel Discharge w/3" Elkhart Electric Unibody Valve and 30degree Droop [#LOC]	$3,814
4415-0777	2.5" Left Panel Discharge 3" Akron Electric 9315 Navigator Valve w/30 Degree Droop to Read Pressure and Flow Location: [#LOC]	$5,523
4415-0778	2.5" Crosslay w/Akron 3" Electric Valve & Navigator 9315 include 3" plumbing. To be located rearward of 1.5" crosslay(s) if applicable. Location: [#LOC]	$6,134
4415-0781	3" Right Pump Panel Discharge UBEC3 Electric Valve with 30 degree droop to read flow, and pressure. Location: [#LOC]	$6,399
4415-0805	5" Left Pump Panel Discharge W/4" Akron Electric Navigator 9315 valve and controller. Include valve position display pressure and flow meter. [#LOC]	$7,972
4415-0806	5" Right Pump Panel Discharge W/4" Akron Electric Navigator 9315 valve and controller. Include valve position display pressure and flow meter. [#LOC]	$7,972
4415-0812	Elkhart Unibody 2.5" foam system discharge with swing handle. For use with Williams Advent or Hot Shot foam systems. Locate to [#LOC].	$1,078
4415-0834	4" Deck Gun Discharge Outlet with 6" Electric Elkhart Valve and plumbing. Require 4" Monitor	$5,837
4415-0835	4" Deck Gun Discharge Outlet with 6" Electric Akron Valve and plumbing. Requires 4" Monitor.	$5,837
4415-0842	5" Right Side Discharge 5" Elkhart Electric Valve. Locate: [#LOC]	$5,141
4415-0847	Akron 635 Swivel with turning vane Located on Top of Bumper officer's side of center tray for Front Bumper Discharge	$163
4415-0849	5" Pump Panel Discharge 4" Akron Electric Valve & Navigator 9315 (Waterous pumps noted location to be forward lower port) Location: [#LOC]	$7,517
4415-0854	3" Left Rear Discharge Elkhart Electric Unibody Valve Location: [#LOC]	$3,308
4415-0855	3" Right Rear Discharge Elkhart Electric Unibody Valve Location: [#LOC]	$3,308
4415-0877	2.5" Crosslay Elkhart UBEC1 Electric Valve. To be located rearward of 1.5" crosslay(s) if applicable. Location: [#LOC]	$2,669
4415-0878	2.5" Right Panel Discharge Elkhart Unibody Electric Valve. Location: [#LOC]	$3,003
4415-0880	2.5" Left Panel Discharge with Elkhart Unibody Manual 3" Valve and 30 Degree Droop Location: [#LOC]	$1,565
4415-0881	2.5" Right Panel Discharge Elkhart Unibody Manual 3" Valve w/30 Degree Droop Location: [#LOC]	$1,565
4415-0888	2.5" Left Pump Panel Discharge UBEC3 Electric Valve to read flow, and pressure. Location: [#LOC]	$4,891
4415-0889	2.5" Front Bumper Discharge Elkhart Electric UBEC3 Valve to read flow, and pressure.	$5,375
4415-0892	3" Front Bumper Discharge Akron Manual Valve. Location; 3" front bumper discharge piped through the center of the center front bumper tray and to come out thru the front bumper. Piping to have a cover plate in tray.	$3,557
4415-0897	2.5" Right Rear Discharge Elkhart Electric Unibody Valve Location: [#LOC]	$2,679
4415-0898	2.5" Left Rear Discharge Elkhart Unibody Electric Valve Location: [#LOC]	$2,985
4415-0899	4" Waterway Discharge with 3" Elkhart Unibody Manual Valve	$2,382
4415-0903	1.5" Front Bumper Crosslay Discharge Akron Manual Valve	$2,211
4415-0904	2" front bumper discharge Elkhart Electric valve. Include Elkhart electric valve, plumbing, and harness from the valve to joystick control located in cab console. Discharge to terminate and capped off just below the center of the bumper for dealer supplied and installed joystick, and bumper turret.	$2,317
4415-0908	2.5" Rear Mount Discharge Akron Electric Valve & Navigator 9315 to Read Pressure only w/30 Degree Droop. Location: [#LOC]	$3,505
4415-0909	4" Waterway Discharge with 4" Akron Electric Valve & Navigator 9315 Control. (Waterway valve override must be accessible through right side pump panel from standing on the ground).	$7,485
4415-0910	2.5" hose bed discharge Akron manual valve [#LOC].	$1,409
4415-0912	Second Left Front Hosebed 3" Elkhart Unibody manual Valve	$2,256
4415-0915	6" Waterway Discharge with 6" Akron Electric Valve.	$5,820
4415-0916	4" Deck Gun Discharge Akron Valve Handwheel Control.	$4,391
4415-0918	1.5" Front Bumper Crosslay Discharge Elkhart Unibody Manual Valve	$2,110
4415-0919	Deck gun monitor 3" Gemini manual hand wheel model 34700011 and nozzle 2.5" NH Excel model 51471000.	$3,332
4415-0920	Left Front Hosebed Discharge 2.5" Elkhart Unibody UBEC1 Valve.	$2,949
4415-0921	Right Front Hosebed Discharge 2.5" Elkhart Unibody UBEC1 Valve.	$2,949
4415-0923	4" Right Pump Panel Discharge with 3" Akron Manual Valve. Include a 4"FNST swivel x 4"MNST 30 degree droop adapter, and cap. Location: [#LOC].	$2,146

4415-0925	All Discharge/Intake caps, and plug to be Kochek brand and Powder coated. Color; White.	$571
4415-0931	2.5" Front Bumper Discharge Akron Electric Valve & Navigator Pro Controller 9325 with pressure read out.	$3,940
4415-0933	2.5" Right Panel Discharge Akron Electric Valve & Navigator Pro 9325 controller w/30 Degree Droop to Read Pressure. Location: [#LOC]	$3,926
4415-0934	2.5" Left Panel Discharge Akron Electric Valve & Navigator Pro 9325 controller w/30 Degree Droop to Read Pressure. Location: [#LOC]	$3,681
4415-0935	4" Right Pump Panel Discharge w/3" Akron Electric Valve & Navigator Pro 9325 with Pressure read out. (Waterous pumps noted location to be forward lower port) Location: [#LOC]	$4,893
4415-0936	4" Pump Panel Discharge Akron Electric Valve & Navigator 9325 to read flow, and pressure w/30 degree droop. (Waterous pumps noted location to be forward lower port). Location: [#LOC].	$5,652
4415-0937	3" Deck Gun Discharge Akron Electric Valve & Navigator read flow, and pressure with 9325 controller.	$5,041
4415-0938	2.5" Left Pump Panel Discharge Akron Manual Valve. The discharge shall extend out beyond the pump panel w/Chrome plated finish. Location: [#LOC].	$1,099
4415-0939	2.5" Right Pump Panel Discharge Akron Manual Valve. The discharge shall extend out beyond the pump panel w/Chrome plated finish. Location: [#LOC].	$1,099
4415-0940	3" Right Pump Panel Discharge Akron Manual Valve. The discharge shall extend out beyond the pump panel w/Chrome plated finish. (Waterous pumps noted location to be forward lower port). Location: [#LOC].	$1,690
4415-0941	4" Right Pump Panel Storz Discharge with 3" Akron Manual Valve. Include 3" FNST X 4" Storz 30 degree elbow adapter with cap. (Waterous pumps noted location to be forward lower port). Location: [#LOC].	$2,345
4415-0942	Left Rear Discharge 2.5" Elkhart Unibody electric valve with UICS-2 CAFS Controller.	$4,182
4415-0943	3" Deck Gun Discharge Akron Electric Valve & Navigator with 9323 controller.	$3,694
4415-0944	3" Right Panel Discharge Akron Electric Valve & Navigator 9325 w/30 Degree Droop (Waterous pumps noted location to be forward lower port) Location: [#LOC]	$5,007
4415-0945	1.5" Front Bumper Discharge Elkhart Electric Valve with UICS-2 CAFS Controller.	$4,423
4415-0946	1.5" Crosslay w/2" Elkhart Electric Unibody Valve with UICS-2 CAFS Controller. Location: [#LOC].	$3,959
4415-0947	2.5" Right Panel Discharge Elkhart Unibody Electric Valve w/Droop, and include UICS-2 CAFS Controller. Location: [#LOC].	$4,339
4415-0948	Preconnect extension (Each). The front hosebed preconnect to be extended to the rear of the hosebed area. Includes smooth plate cover. Location: [#LOC].	$452
4415-0952	4" Deck Gun Discharge Outlet with 6" Electric Akron Valve and plumbing. Require 4" Monitor. Locate right rear.	$6,829
4415-0954	1.5" Front Bumper Discharge Akron Electric Valve & Navigator 9325 controller to read flow, and pressure..	$5,467
4415-0955	3" Deck Gun Discharge Akron Electric Valve with 9325 Navigator Controller to read flow, and pressure.	$5,603
4415-0956	4" Right Rear Discharge Akron Electric Valve with 9325 Navigatorcontroller to read flow, and pressure. [#LOC].	$7,410
4415-0963	One (1) pre-connect 1.5" adaptation to Storz. The pre-connect extension hose shall include an adapter to Storz and the pre-connect nozzle (sold separately in loose equipment) shall be supplied with a Storz adapter.	$185
4415-0965	Left Front Hosebed Discharge 3" Akron Manual Valve and shall terminate with a 3"FNPT X 2.5"MNST adapter.	$2,059
4415-0966	Right Front Hosebed Discharge 3" Akron Manual Valve and shall terminate with a 3"FNPT X 2.5"MNST adapter.	$2,059
4415-0967	1.5" Crosslay w/2.5" Akron Manual Valve and plumbing. Include 2.5" FNST X 1.5" MNST adapter. Location: [#LOC].	$1,141
4415-0969	2.5" left front hose bed discharge Akron manual valve. Locate discharge(s) approximately 26" up from hosebed floor.	$1,690
4415-0970	5" Right Pump Panel Discharge with 3" Akron Manual Valve w/Droop. Include a 3"FNST swivel x 5"Storz adapter, and a 5"Storz x 4" Storz with cap. Location: [#LOC].	$2,453
4415-0972	4" Right Pump Panel Storz Discharge with 4" Akron Electric Valve. Include 4" FNST X 4" Storz 30 degree elbow adapter with cap. (Waterous pumps noted location to be forward lower port). Location: [#LOC].	$4,638
4415-0973	5" Right Pump Panel Storz Discharge with 3" Akron Manual Valve. Include 3" FNST X 5" Storz 30 degree elbow adapter with cap. (Waterous pumps noted location to be forward lower port). Location: [#LOC].	$2,453
4415-0975	2.5" Front Bumper Crosslay Discharge Akron Electric Valve.	$3,252
4415-0977	2.5" Front Bumper Crosslay Discharge Akron Manual Valve.	$2,414
4415-0978	4" Waterway Discharge with 4" Akron Electric Valve & Navigator 9325 Control to read flow, and pressure.	$5,128
4415-0986	4" Right Pump Panel Discharge w/4" Akron Electric Valve with 9323 controller. (Waterous pumps noted location to be forward lower port) Location: [#LOC]	$4,566
4415-0989	Left Front Hosebed Discharge 3" w/ 3" Elkhart Unibody Manual Valve and shall terminate with a 3"FNPT X 2.5"MNST adapter.	$2,257
4415-0991	4" Pump Panel Discharge Akron Electric Valve & Navigator 9325 to read flow, and pressure. (Waterous pumps noted location to be forward lower port). Location: [#LOC].	$5,458
4415-0992	4" Pump Panel Discharge Akron Electric Valve & Navigator 9325 (Waterous pumps noted location to be forward lower port). Location:Left Side Discharge 1.	$7,912
4415-0994	4" waterway discharge with 4" Akron electric valve with 9323 controller.	$4,472
4415-0996	1.5" Front Bumper Discharge Akron Electric Valve with 9323 controller.	$3,101

4415-0999	4" Right Pump Panel Discharge w/3" Akron Electric Valve, and 9323 controller. (Waterous pumps noted location to be forward lower port) Location: [#LOC]	$3,923
4415-1001	4" Right Panel Discharge w/30 Degree Droop. Include 4" Akron Electric Valve w/9323 Controller. (Waterous pumps noted location to be forward lower port) Location: [#LOC]	$4,769
4415-1003	1.5" Front Bumper Crosslay Discharge Elkhart Unibody Valve with hand wheel control.	$2,851
4415-1004	1.5" Double Speedlay with Elkhart Unibody Valves with hand wheel controls.	$4,197
4415-1005	2.5" Left Panel Discharge Elkhart Hand Wheel Control UnibodyValve w/30 Degree Droop Location: [#LOC]	$2,194
4415-1010	3" Right Panel Discharge Akron Electric Valve and 9323 Controller w/30 Degree Droop. (Waterous pumps noted location to be forward lower port). Location: [#LOC].	$3,851
4415-1011	3" Right Pump Panel Discharge Akron Electric Valve. Location: [#LOC].	$3,647
4415-1014	4" Waterway Discharge with 3" Elkhart Unibody Electric Valve	$3,756
4415-1015	3" Right Pump Panel Discharge Akron Electric Valve with 9323 controller. Location: [#LOC].	$3,647
4415-1016	4" waterway discharge with 3" Akron electric valve, and 9323 controller.	$3,739
4415-1017	2.5" Front Bumper Discharge Akron Electric Valve with 9323 controller.	$3,252
4415-1018	2.5" Left Front Hose Bed Akron Electric Valve with 9323 controller.	$3,420
4415-1023	4" Deck Gun Discharge Outlet with 6" Electric Akron Valve and plumbing. Requires 4" Monitor.	$5,837
4415-1024	4" Right Pump Panel Discharge w/3" Akron Electric Valve, and 9323 controller include 30 degree droop. (Waterous pumps noted location to be forward lower port) Location: [#LOC]	$4,227
4415-1025	5" Right Pump Panel Discharge w/3" Akron Electric Valve. Location: [#LOC].	$4,632
4415-1026	5" Pump Panel Discharge with 4" Akron Electric Valve with 9323 controller. Location: [#LOC].	$5,097
4415-1031	4" Deck Gun Discharge 6" Electric Akron Valve with 9323 controller and plumbing. Requires 4" Monitor.	$5,837
4415-1036	2.5" Right Pump Panel Discharge Akron Manual Valve to be used with Wetside - under tank design only. Location: [#LOC].	$2,165
4415-1038	2.5" Right Pump Panel Discharge Akron Electric Valve to be used on Wetside with under tank design only. Location: [#LOC].	$4,101
4415-1040	1.5" Crosslay w/2.5" Elkart Unibody Manual Valve and plumbing Location: [#LOC]	$1,141
4415-1041	4" Pump Panel Discharge w/3" Akron Electric Valve & Navigator 9325 to read flow, and pressure. (Waterous pumps noted location to be forward lower port). Location: [#LOC].	$5,104
4415-1043	3" Deck Gun Discharge Elkhart Electric Unibody valve UBEC2 to pressure.	$4,347
4415-1044	3" Right Pump Panel Discharge UBEC2 Electric Valve with 30 degree droop to read pressure. Location: [#LOC]	$4,259
4415-1045	Preconnect extension (Each). The front hosebed preconnect to be extended to the rear of the hosebed area. Includes smooth plate cover. Location: second officer side hose bed preconnect is to treminate approx 10" from back edge of hosebed.	$390
4417-0019	Fire Shop Bezel Chrome - Side Discharge/Intake	$92
4417-0021	Deck Gun Remote Ext-a-Gun 4"	$4,388
4417-0026	Automatic drain valve. For: [#LOC].	$77
4417-0030	Monitor Akron 3578 Electric 2000.	$9,510
4417-0031	Monitor Akron 3570 Manual 2000	$3,488
4417-0032	Monitor Scorpion wireless RF radio 2000 GPM	$10,673
4417-0038	Elkhart Model 8294-06 Monitor with SM-200E Nozzle. Wireless Remote control	$13,565
4417-0039	Akron DeckMaster 3440 electric 1250 GPM monitor w/stow.	$11,080
4417-0040	Akron 5177 Akromatic 2.5" master stream nozzle for an Akron 3440 DeckMaster monitor.	$1,692
4417-0041	Akron 1577 SaberMaster 2.5" Nozzle for an Akron 3440 DeckMaster monitor.	$3,235
4417-0042	An Akron tether remote control kit with a 30`cable shall be provided for an Akron 3440 monitor. Plug for the remote control to be located: [#LOC].	$1,074
4417-0043	Task Force Hurricane RC electric 1250 GPM monitor.	$12,474
4417-0044	Task Force M-ERP-NJ 2.5" master stream electric nozzle for a Hurricane RC monitor.	$1,872
4417-0045	Elkhart Stinger 8297-25 Manual 800gpm Monitor w/portable base and adapter to mount to deck gun discharge or extend-a-gun	$3,092
4417-0046	Elkhart 8500 Vulcan RF monitor with panel mounted and hand held remote controls w/adapter to mount to deck gun discharge or extender.	$6,166
4417-0047	Elkhart SM-1250E Select-O-Matic 2.5" electric nozzle.	$2,341
4417-0048	Elkhart 8598 Electrically Actuated Extender.	$2,800
4417-0051	Thread Type: All 1.5" discharges to be NPSH threads. All 2.5" inlets and discharges to be CSA (Ontario) threads as an integral part of the valve.	$613
4417-0052	Extend Specified Hosebed Preconnect up to top of hosebed. Top of preconnect to be below top of hosebed. Location: [#LOC]	$392
4417-0054	Preconnect extension (Each). The front hosebed preconnect to be extended to the rear of the hosebed area. Includes smooth plate cover. Location: [#LOC]	$390
4417-0057	Ferrell Compression Fittings for all Discharge and Intake Bleeder Lines	$591
4417-0059	Extend Specified Hosebed Preconnect up to mid-point of hosebed. Center of preconnect to be approximately center of hosebed height. Location: [#LOC]	$295
4417-0067	Monitor 4" TFT Monsoon Manual with TFT Master Stream 2000 gpm manual Nozzle.	$6,220
4417-0068	TFT Tether Kit with 30' Cable for an TFT Monitor Location: [#LOC]	$747
4417-0075	Monitor 4" TFT Monsoon Electric with TFT Master Stream 2000 gpm electric Nozzle. Include panel mount and hand held Remote.	$14,046
4417-0077	Adapter 3"FNST x 3.5" MNST with Cap.	$229
4417-0079	9304 Akron Navitgator electric valve control. Location: All electric discharge valves IPOS.	$578
4417-0080	All 1.5" Threads to be IPT threads	$67
4417-0081	Vented caps and plugs for all discharges/intakes.	$562

4417-0083	Elkhart 8297F Stinger RF Monitor with Panel Mounted and Hand-Held Remote Controls w/adapter to mount to deck gun discharge or extender	$8,775
4417-0084	Task Force M-ERP-NJ 2.5" Masterstream Electric Nozzle for a Hurricane RC Monitor	$1,872
4417-0085	Thread Type: All 1.5" discharges to be NPSH threads.	$307
4417-0086	Task Force Typhoon RC Electric Monitor with 1500gpm nozzle. Include Radio Remote Control	$13,147
4417-0088	Bleeder drain valve plumbed to: [#LOC].	$112
4417-0090	Additional control for deck gun electric valve locate adjacent to the outlet.	$1,667
4417-0092	Task Force Typhoon RC Electric Monitor without nozzle. Include Radio Remote Control (Require Nozzle)	$10,553
4417-0099	Akron Wireless Deck Gun Remote Monitor Controller.	$1,537
4417-0100	Akron 3600 Wireless Remote Control.	$1,650
4417-0102	Akron DeckMaster 3440 Electric 1250gpm Monitor w/Stow. With 30' Tether controller located in pump panel operator compartment.	$11,657
4417-0118	Discharge Elbow 3" 45Deg 3"FNPT X 2.5"MNST with cap. Location on rear discharge IPOS.	$185
4417-0119	Task Force Hurricane RC Electric Monitor with a Master Stream 1250 GPM nozzle. Includes wireless Radio Remote Control.	$11,676
4417-0120	Adapter Chrome Reducer 2.5"FNST x 1.5"MNST w/Cap. [#LOC].	$92
4417-0127	Chrome discharge elbow 3"FNST x 2.5"MNST 30 Deg [#LOC].	$246
4417-0129	Left side 2.5" pump panel discharges on Waterous pump to be side by side. For use with Side Mount Pump Module.	$780
4417-0130	Task Force Tip Hurricane XFI-PLNJ Manual Monitor with MST-4NJ-2.5"NH Quad Stack Tips and M-R1000-NJ Automatic Nozzle.	$3,537
4417-0135	Addition Automatic drain valve. For: front bumper discharge. Loction under front bumper at lowest point.	$77
4417-0138	Officer side pump panel shall have polished stainless steel split escutcheon plates mounted in place for each discharge/intake. The escutcheon plates will be fastened in place to allow quick disassembly to permit the hinge to operate.	$233
4417-0147	Special piping run for 2.5" bumper discharge. Run piping thru back wall of center tray down low offset to officer side (approximately 1" clearance between pipe and officer side tray wall), run piping into tray approx halfway then 90 degrees up to top of gravel shield.	$179
4417-0149	Akron DeckMaster 3440 electric 1250 GPM monitor w/stow package. Include 1577 SaberMaster 2.5" Nozzle, and 3600 Wireless Remote Control. (DND OF CANADA)	$13,819
4417-0150	Manual override access hole to be supplied in officer's side pump panel to access the override on the 4" discharge .Wrench required for manual override shall be located in vicinity of access panel.	$81
4417-0153	Elkhart Cobra EXM monitor with panel mounted and hand-held remote controls w/adapter to mount to deck gun discharge or extender. Include SM-1250E nozzle	$10,736
4417-0154	Additional electric controller for discharge electric valve locate adjacent to the outlet. Locate.[#LOC].	$1,667
4417-0158	Deck Gun Discharge piping shall be extended flush with top of booster reels.	$249
4417-0159	Monitor Scorpion 8294-02 Monitor w/2000 GPM Nozzle, and ST-195 stacked tips (tips shipped loose).	$8,789
4417-0160	Thread Type: All 1.5" discharges to be NEW CHICAGO FD 1.933 x 11 1/2 threads per inch. All 2.5" inlets and intake releif valve dump pipe to be 2.99 x 7 1/2 NEW CHICAGO FD threads per inch.	$516
4417-0162	Akron DeckMaster 3440 UII CAN electric 1250 GPM monitor w/stow.	$11,080
4417-0163	Additional control for deck gun valve handwheel control locate adjacent to the outlet.	$1,384
4417-0166	Monitor 3" TFT Monsoon Electric with TFT Master Stream 1500 gpm electric Nozzle. Include panel mount and hand held Remote.	$11,007
4417-0171	Deck Gun Pipe. The piping for the deck gun shall terminate with a 4 bolt flange.	$157
4417-0174	CAFS Compressor "auto on".	$130
4417-0178	Task Force Tip Hurricane Manual Monitor XFIH-D61A, female NPT thread for use with Manual Extend-a-gun.	$1,511
4417-0179	Task Force 2.5 Master Stream 1250 Series M-R1250-NJ Manual Nozzle	$1,330
4417-0180	Task Force Tip Hurricane XFIH- Manual Monitor with MST-4NJ-2.5"NH Quad Stack Tips and M-R1250-NJ Automatic Nozzle.	$3,537
4417-0183	Monitor Scorpion 8294-02 Monitor w/2000gpm Nozzle.	$8,591
4417-0185	Innovative Controls discharge and intake bezels with integral color code and verbiage for side mount pump panel.	$467
4417-0186	Innovative Controls discharge and intake bezels with color code and verbiage for top mount pump panel.	$300
4417-0192	Innovative Controls discharge and intake bezels with integral color code and verbiage for rear mount pump panel.	$320
4417-0193	Extend Driver Hosebed up 16" from hosebed floor.	$392
4430-0008	Advent 30 Foam System for a Single Foam Tank	$19,323
4430-0011	1600 Rockwood Around The Pump Foam System	$4,058
4430-0013	Williams 1500 Around-The-Pump foam system.	$6,885
4430-0014	Hale 2.1A FoamLogix foam system.	$6,839
4430-0015	Hale 3.3 FoamLogix foam system.	$14,529
4430-0016	5.0 Hale FoamLogix Foam System.	$16,380
4430-0017	400 Rockwood around the pump foam system.	$3,056
4430-0018	1600 Hypro/FoamPro foam system.	$7,934
4430-0019	2001 Hypro/FoamPro foam system.	$12,885
4430-0020	2002 Hypro/FoamPro foam system.	$16,424

4430-0022	Hot Shot II 150 Foam System.	$49,515
4430-0031	Eclipse Compressed Air Foam System 1000 GPM Manifold w/2002 FoamPro.	$76,658
4430-0032	CAFSPRO with 2.1 Foam Logix Compressed Air Foam System with 750gpm Manifold	$45,715
4430-0039	Eclipse Compressed Air Foam System 500 GPM Manifold w/2001 FoamPro	$71,483
4430-0041	WATP 500 A/B Foam System Include 1.5" Foam pick up.	$9,416
4430-0042	Advent 12 Foam System for a Single Foam Tank	$19,123
4430-0043	Advent 12 Dual Foam System for Dual Foam Tanks	$20,994
4430-0045	95 GPM Akron Foam Eductor. Location: [#LOC].	$2,100
4430-0046	125 GPM Elkhart Foam Eductor Location: [#LOC]	$2,618
4430-0047	125 GPM Akron foam eductor. Location: [#LOC].	$2,398
4430-0048	95 GPM Elkhart Foam Eductor Location: [#LOC]	$2,388
4430-0052	CAFSPRO with 3.3 Foam Logix Compressed Air Foam System with 750gpm Manifold	$57,693
4430-0053	CAFSPRO with 5.0 Foam Logix Compressed Air Foam System with 750gpm Manifold	$58,675
4430-0056	125 GPM Elkhart Foam Eductor w/air actuated foam valve Location: [#LOC]	$3,160
4430-0057	125 GPM Akron Foam Eductor w/air actuated foam valve. Location: [#LOC].	$2,812
4430-0058	Hot Shift Clutch - Required with CAFS system	$2,863
4430-0059	Eclipse Compressed Air Foam System 500 GPM Manifold w/2002 FoamPro.	$75,021
4430-0060	CAFSPRO 5.0 FoamLogix Compressed Air Foam System with 1000 GPM manifold.	$60,266
4430-0061	FoamPro 3012 foam system, hydraulics PTO driven.	$21,852
4430-0066	Foam Tank To Pump 1" Air/Act for Dealer install foam system.	$801
4430-0070	125 GPM Akron Simple Apparatus Foam System	$1,525
4430-0071	1500V Williams A/B Around The Pump foam system. Include A/B tanks control.	$8,470
4430-0073	1.5 Feecon Around The Pump Foam System	$4,124
4430-0075	2.0 Feecon Around The Pump Foam System	$4,245
4430-0076	Eclipse Waterous Compressed Air Foam System 1000 GPM Manifold.	$60,237
4430-0077	Waterous Advantus 6.0 Foam System	$18,434
4430-0078	Classic 140 Compressed Air Foam System. Shall include (5) Discharge outlets (1) 2.5" Left Hosebed Preconnect Discharge, (2) 1.5" Crosslay outlets, and (2) booster reels.	$40,018
4430-0079	The foam system performance shall be tested and certified in compliance with 2009 NFPA 1901.	$276
4430-0080	The balanced pressure foam system performance shall be tested and certified in compliance with 2009 NFPA 1901.	$550
4430-0081	1500 Williams Around The Pump Foam System Up Graded to 2000gpm at 3%	$2,686
4430-0085	Classic 140 Compressed Air Foam System.	$22,726
4430-0093	Venom 5.0 Hypro/Foam Pro Foam System.	$16,840
4430-0094	Advent 12 Elecrict (230) Dual Foam System for Dual Foam Tanks	$23,881
4430-0107	WATP 500 B Foam System. Includes 1.5" Foam pick-up.	$7,921
4430-0109	Waterous Advantus 3.0 foam system.	$13,404
4430-0112	125 GPM Akron Foam Eductor w/manual panel mount 1/4 turn foam valves (1) for A tank, and (1) for B tank. Location: [#LOC]	$3,109
4430-0113	The foam system shall be factory tested at, minimum, maximum, and midrange.	$276
4430-0114	Eclipse Compressed Air Foam System 3" Manifold w/Advantus 6.0 Foam system.	$70,854
4430-0115	125 GPM Akron foam eductor system with air actuation for both foam eductor and foam supply valve. Location: [#LOC].	$3,530
4430-0117	1500V Williams A/B Around The Pump Foam System with Single Tank and Aux Pickup to be use for Class A or Class B foam inlet.	$8,998
4430-0120	1500V Williams Manual A/B Around The Pump foam system with pickup. Include manual A/B tanks control with manual .75 flush valve.	$8,522
4430-0122	1601 Hypro/FoamPro foam system.	$7,263
4430-0124	Pneumax 140-SP Silver Compressed Air Foam System to be used on Ford F550 chassis and driven off the Hale DSD Pump. Requires special DSD pump with PTO Bore and SAE "B" hydraulic drive splined.	$23,531
4430-0128	Hale SmartCAFS 5.0 FoamLogix Compressed Air Foam System with 1000 GPM manifold.	$59,800
4430-0130	Waterous 200-P PTO Platinum Compressed Air Foam System	$26,716
4430-0131	Waterous 140-P PTO Platinum Compressed Air Foam System	$26,053
4430-0132	Waterous 80-P PTO Platinum Compressed Air Foam System	$19,897
4430-0133	Darley 150 ODIN Compressed Air Foam System.	$19,405
4430-0135	125 GPM Akron Foam Eductor w/manual panel mount 1/4 turn foam valves. Include push/pull for foam eductor Location: [#LOC]	$2,916
4430-0136	Darley 150-PTO Compressed Air Foam System	$24,667
4432-0001	Akron 5178 Electric 2000 GPM Nozzle.	$2,208
4432-0002	Akron 5070 Manual 2000 GPM Nozzle	$1,698
4432-0003	Elkhart SM2000 Electric Nozzle	$2,195
4432-0009	Hot Shot Ratio Controller 2" Discharge. Plumbed to: [#LOC].	$2,023
4432-0010	Hot Shot Ratio Controller 2.5" Discharge. Plumbed to: [#LOC].	$2,081
4432-0012	Advent Ratio Controller 2" Discharge. Plumbed to: [#LOC]	$1,655
4432-0013	Advent Ratio Controller 2.5" Discharge. Plumbed to: [#LOC]	$1,658
4432-0014	Advent Ratio Controller 3" Discharge. Plumbed to: [#LOC]	$1,683
4432-0015	Advent Ratio Controller 4" Discharge. Plumbed to: [#LOC]	$1,865
4432-0016	Advent Ratio Controller 5" Discharge. Plumbed to: [#LOC]	$3,400
4432-0019	Foam Pro Remote Start Switch	$671
4432-0020	Eclipse 1.5"/3.0" Compressed Air Foam System Discharge Kit. Location: [#LOC].	$21
4432-0022	1.5" Compressed Air Foam System Discharge Kit Location: [#LOC]	$323
4432-0023	2.0" Compressed Air Foam System Discharge Kit. Location: [#LOC].	$326
4432-0024	2.5" Compressed Air Foam System Discharge Kit. Location: [#LOC].	$328

4432-0025	3.0" Compressed Air Foam System Discharge Kit Location: [#LOC]	$367
4432-0026	3" Deck Gun Discharge Eclipse Compressed Air Foam System	$3,592
4432-0027	3" Deck Gun Compressed Air Foam System	$3,901
4432-0036	A/B Hypro/FoamPro manual foam selector.	$2,167
4432-0037	A/B Class 1 manual foam selector.	$3,129
4432-0045	Hot Shift Clutch	$2,947
4432-0052	Remote foam tank fill, FoamPro's "Power Fill".	$566
4432-0054	Akron Quick Disconnect Foam Pickup Tube on Driver's Side Pump Panel for Eductor. Located on: [#LOC].	$455
4432-0055	Elkhart Quick Disconnect Foam Pickup Tube on Driver's Side Pump Panel for Eductor Located on: [#LOC]	$646
4432-0056	Hale EZ-Fill foam system for a single foam tank. Includes clear hose wand (shipped loose). Controller and connection port located [#LOC].	$2,663
4432-0057	Hale EZ-Fill foam system for dual foam tank. Includes clear hose wand (ship loose). Controller and connection port located [#LOC].	$3,004
4432-0058	Akron quick-disconnect foam pickup tube on officer's side pump panel for eductor. Located on: [#LOC].	$455
4432-0059	Elkhart Quick Disconnect Foam Pickup Tube on Officer's Side Pump Panel for Eductor Located on: [#LOC]	$646
4432-0060	Label for ATP foam systems.	$33
4432-0061	FoamPro foam system refill. Includes clear hose wand (ship loose). Controller and connection port located [#LOC].	$3,009
4432-0063	Hale FoamLogix air actuated A/B selector.	$3,540
4432-0064	Hypro FoamPro electric actuated A/B selector.	$3,322
4432-0065	3" Deck Gun CAFSPRO Compressed Air Foam System.	$6,222
4432-0066	Additional 3/4" Foam Tank Valve for 95 Eductor and Dual Foam Cells	$438
4432-0070	Hot Shot Ratio Controller 4" Discharge. Plumbed to: [#LOC].	$2,866
4432-0073	Foam Fill Connection Provide a 1.5" FNST tank fill connection for each tank with rocker lug plug, and a replaceable .25" mesh strainer on the left pump panel within easy reach of the ground, Install a check valve to prevent foam loss during hose connection, also install a 1/4" turn drain valve plumbed from inboard side of check valve so line can be drained.	$639
4432-0074	.375 Foam Maniflod Drain	$127
4432-0075	FoamPro Advanced Digital Controller "auto start".	$130
4432-0077	Foam Pickup 10 feet with 1.0 PVC Clear Spiraflex Hose IPOS	$229
4432-0078	Foam tank drain plumbed to side panel with valve and 3/4" male garden hose connection. To allow filling of remote foam unit and pails from tank.	$822
4432-0079	A/B Class 1 Manual Foam Selector	$3,129
4432-0080	Special CAFS/FOAM Manifold for (4) preconnects, Deck Gun, and 3" Right Rear discharge.	$5,752
4432-0082	Foam Pickup 2" on Side Pump Panel. With Manual valve and Pickup Tube.	$765
4432-0083	Deck Gun Foam Tank To Pump Connection Provide a Manual 1.5" Valve Locate Next to Deck gun outlet.	$767
4432-0089	CAFS Manual Air Valve to be .3/4" Valve in place of standard.	$132
4432-0090	CAFS/Foam System Operation Label "Operate only (2) 1 3/4" Discharges or (1) 2 1/2" at a time"	$175
4432-0091	Special design 5" foam/water manifold with check valves.	$3,661
4432-0093	Hot Shot Ratio Controller 5". Plumbed to: [#LOC].	$2,921
4432-0094	Waterous Electric Actuated A/B Selector.	$3,179
4432-0096	Hale Foam Logix Remote Start Switch	$708
4432-0097	.75" Foam Manifold Drain with 1/4 turn valve.	$438
4432-0099	Foam System Plumbed to [#LOC].	$287
4432-0100	2.0" Compressed Air Foam System Discharge Kit with Electric actuated 1/2" valve. Location: [#LOC].	$357
4432-0101	2.5" Compressed Air Foam System Discharge Kit with Electric actuated 3/4" valve. Location: [#LOC].	$361
4432-0104	Hale Manual Single Foam Flush System.	$1,108
4432-0105	A/B Foam Selector locate Driver side walk way recess in box on diamond plate panel at front of module.	$166
4432-0112	5" Discharge Right Side Electric Valve W/Ratio Controler for Hot Shot II System. Include metering valve Location: [#LOC]	$6,063
4432-0113	Foam Intake Test Port Locate on the intake side of pump between the strainer and the pump, bulkhead fitting is to be on operator pump panel.	$92
4432-0114	Foam testing. The foam system shall be calibrated for 1 X 3 Thunderstrom foam AR-AFFF concentrate. The foam propotioning system shall provide .25%, .5%, 1%, and 3% foam solutions within the allowable concentration ranges required in NFPA #1901. Each percentage shall be tested at a high and low flow and a revit shall be install at mid point..	$1,973
4432-0117	1.5" FNST Hydro- Foam Aux Foam pickup. The 1.5" FNST foam inlet fitting shall be located on officer side pump panel with a electic over air control valve. And be control at the operator panel.	$1,328
4432-0118	Foam Strainer Pump Panel Mount with 1" connection ports and 2.5" NST cap. (IPOS strainer for foam system.)	$1,017
4432-0119	Foam Strainer Pump Panel Mount with 1" connection ports and 2.5" NST cap. (For Foam Refill)	$1,017
4432-0121	Foam Tank Supply/Flush 1" valves will be electric control operated through the V-MUX system. The flush valve to be located as close to foam tank supply valve as possible. A manual flush drain .75" valve will be located under the officer's side running board.	$995
4432-0122	A 1.50" x 10' reinforced concentrate hose and stinger shall be provided with NST threads to connect to the foam inlet as (shipped loose) for auxiliary foam operations.	$270

4432-0123	Eclipse 1.5"/3.0" Compressed Air Foam System Discharge Kit Location: [#LOC]	$515
4432-0125	6" Ratio Controller for Hot Shot II System. Include metering valve. Location: [#LOC].	$3,753
4432-0129	Hot Shot Ratio Controller 5" Discharge. Plumbed to: [#LOC].	$3,872
4432-0134	Eclipse 1.5"/3.0" Compressed Air Foam System Discharge Kit. Location: [#LOC].	$287
4432-0135	CAFS Audible w/light Low Air Alarm shall be tied into the CAFS air system. If it drop below 90PSI the alarm aviate.	$342
4432-0151	FoamPro aux foam fill kit. Include check valve, level sensor, placard and camlok connection.	$703
4432-0152	1.5" Foam Tank to pump Electric/Air Actuated. With a guard switch cover adjacent to the foam control display.	$977
4432-0153	CAFS system water drain shall be extended out to pump panel.	$222
4432-0159	CAFs system drains shall be extended to the officer's side pump panel area.	$335
4432-0160	3" Compressed Air Foam System Discharge Kit with Electric actuated 3/4" valve. Location: [#LOC]	$417
4432-0161	1.5" Compressed Air Foam System Discharge Kit with Electric actuated 1/2" valve. Location: [#LOC]	$356
4432-0162	6" High Flow Ratio Controller for Hot Shot II System. Includes metering valve. Location: [#LOC].	$3,753
4432-0163	1.5" Foam Tank to pump Air Actuated. With a guard switch cover adjacent to the foam control display.	$977
4432-0164	Waterous Electric Actuated A/B Selector. A to be plumb to the foam tank, and B to be plumb to the left pump panel for an aux foam pick-up.	$3,179
4432-0165	Special design foam/water manifold to allow dealer supplied foam system to be plumbed to crosslay 1, crosslay 2 and rear discharge so they are foam ready.	$3,661
4432-0168	Auto on power-up mode, which automatically come on with pump in gear.	$130
4432-0169	Advent Ratio Controller 2" Discharge. Special Orifice size .10, .250, .500, 1.0, and 3.0% Plumbed to: [#LOC]	$1,655
4432-0170	Advent Ratio Controller 2.5" Discharge. Special Orifice size .10, .250, .500, 1.0, and 3.0% Plumbed to: [#LOC]	$1,658
4432-0171	Advent Ratio Controller 3" Discharge. Special Orifice size .10, .250, .500, 1.0, and 3.0% Plumbed to: [#LOC]	$1,683
4432-0172	Advent Ratio Controller 4" Discharge. Special Orifice size .10, .250, .500, 1.0, and 3.0% Plumbed to: [#LOC]	$1,865
4432-0173	An Elkhart quick-connect foam outlet with pick-up tube assembly permits foam from on-board tank supply or to a 5 gal. pails/buckets. For portable eductor. Install one on each side pump panel.	$1,741
4432-0176	An Elkhart quick-connect foam outlet with pick-up tube assembly permits foam from on-board tank supply or to a 5 gal. pails/buckets. For portable eductor. Location: [#LOC].	$872
4432-0179	A Elkhart quick-connect, foam outlet with pick-up tube assembly permits foam from on-board tank supply or to a 5 gal. pails/buckets. For portable eductor. Location: [#LOC].	$750
4432-0180	Foam Flush with 1/4" valve. Locate inside driver side upper pump access door, rearward.	$438
4432-0182	Extended warranty for Waterous CAFS compressor - 4 Years in addition to the standard 1 year warranty (parts only).	$2,562
4432-0185	Foam Flush System.	$105
4432-0187	Addition Foam Flush System. A 3/4" valve with garden hose bib connection mounted in pump compartment (1) for 2002 and (1) for 3060 system. They will be plumb to the foam supply line for flushing of the system. A check valve prevents water from entering the foam tank when the system is not being flushed.	$404
4432-0189	CAFS Compressor "Auto On".	$130
4432-0190	.75" Foam Manifold Drain with lift lever 1/4 turn valve.	$299
4432-0191	FoamPro off-board pickup. Includes clear hose wand (ship loose). Controller and connection port located [#LOC].	$3,178
4432-0193	Foam ready Manifold for a Hale Foam Logix or a Foam Pro system- plumbed to front jumpline , bottom 1.75" speedlay and officer side 2.5" discharge. W/3" plumbing.	$1,878
4432-0196	A CAFS Compressor RPM interlock indicator light, and label shall be on the pump operator panel. Indicator light will come on when engine RPM is to high to engage CAFS PTO.	$73
4435-0001	Class 1 Intelli-Tank water tank level gauge. On pump panel.	$468
4435-0002	Class 1 Intelli-Tank foam tank level gauge. On pump panel.	$484
4435-0003	Class 1 Intelli-Tank/Whelen 500 LED water tank level gauge package. Location of Whelen 500 tank level lights: [#LOC].	$3,786
4435-0004	Sight Tube Water Tank Level Gauge. Located driver's side front of body.	$482
4435-0005	Innovative Controls 5 Water Tank Level Gauge	$440
4435-0006	Innovated Contols 5 Foam Tank Level Gauge	$686
4435-0007	Class 1 Water Bar graph style Tank Level Gauge.	$736
4435-0008	Class 1 foam Bar graph style Tank Level Gauge.	$975
4435-0009	Fire Research TankVision model WL2600 Class A foam tank level gauge.	$905
4435-0010	Fire Research TankVision model WL2000 water tank level gauge.	$788
4435-0011	Fire Research TankVision model WL2700 B foam tank level gauge.	$904
4435-0012	Pump overheat indicator.	$348
4435-0013	4.5" Class 1 compound pressure gauge (30-0-600 PSI).	$185
4435-0014	Dual Read 4.5" Pressure Gauge (30-0-600 psi/100-0-4000 KPA).	$277
4435-0015	2.5" Class 1 compound pressure gauge (30-0-600). Discharge(s): [#LOC].	$133
4435-0016	Dual Read 2.5" Pressure Gauge (30-0-600 psi/100-0-4000 KPA). Discharge: [#LOC].	$187
4435-0018	Dual Read 3.5" Pressure Gauge (30-0-600 psi/100-0-4000 KPA). Discharge: [#LOC]	$254
4435-0019	3.5" Class 1 compound pressure gauge (30-0-600). Discharge: [#LOC].	$159
4435-0020	MC Products gauge heater line controls and strips for 4 gauges.	$712

4435-0021	Gauge heater strips, additional (EA).	$136
4435-0022	6" NoShok pressure gauge (30-0-600).	$646
4435-0023	4" NoShok master pressure gauges (30-0-600).	$197
4435-0024	6" Class 1 compound pressure gauge (30-0-600).	$636
4435-0025	Flowminder Super System. Discharge: [#LOC].	$2,629
4435-0026	Flowminder System with Totalizer. Discharge: [#LOC].	$1,700
4435-0027	Flow Meter Value System. Discharge: [#LOC].	$1,561
4435-0030	Transmission temperature gauge.	$241
4435-0031	Pump hourmeter on pump operator's panel.	$150
4435-0033	Ammeter gauge on pump operator's panel.	$273
4435-0034	Fuel level gauge on pump operator's panel.	$330
4435-0035	Enfo III System on Pump Operator's Panel	$996
4435-0036	Engine gauge package at the pump operator's panel.	$690
4435-0038	Class 1 Engine Status Center on Pump Operator's Panel	$1,636
4435-0040	FRC Tachplus engine monitoring display.	$1,341
4435-0047	Class 1 Intelli-Tank water tank level gauge, additional. Location: [#LOC].	$538
4435-0049	Class 1 tank level water LED graph gauge, additional. Location: [#LOC].	$736
4435-0050	FRC Tank Level Water TankVision Gauge, Additional. Location: [#LOC].	$500
4435-0051	Innovated Controls 5 Light Tank Level Water Gauge Additional Location: [#LOC]	$657
4435-0052	Class 1 Tank Level Water Mini Gauge Additional. Location: [#LOC].	$492
4435-0053	FRC Tank Level Water TankVision model WLA205-A00 Mini Gauge. Location: [#LOC].	$374
4435-0054	Innovative Controls 5 Light Tank Level Water Mini Gauge. Location: [#LOC].	$513
4435-0055	Class 1 Tank Level Intelli Foam Gauge Additional. Location: [#LOC].	$538
4435-0056	Class 1 Tank Level Foam Mini Gauge Additional Location: [#LOC]	$492
4435-0057	FRC Tank Level A Foam Tank Vision model WLA265-A00 Mini Gauge, Additional. Location: [#LOC].	$448
4435-0058	FRC Tank Level B Foam Tank Vision model WLA205-A00 Mini Gauge Location: [#LOC]	$448
4435-0059	Innovated Controls Tank Level Foam Mini Gauge Additional Location: [#LOC]	$513
4435-0063	Duplex Master Gauge for CAFS or Industrial Foam Systems.	$497
4435-0064	FRC Insight Ultimate model FPA400 combination pressure/flow gauge. Location: [#LOC].	$1,982
4435-0065	2.5" NoShok pressure gauge (30-0-600). For: [#LOC].	$143
4435-0066	IC5/Whelen 500 Water Tank Level Gauge Package Location of Whelen 500 Tank Level Lights: [#LOC]	$3,759
4435-0067	Class 1/Whelen PSTank Water Tank Level Gauge Package. Location of Whelen PSTank Strip-Lights: [#LOC].	$1,784
4435-0068	IC5/Whelen PSTank Water Tank Level Gauge Package Location of Whelen PSTank Strip-Lights: [#LOC]	$1,756
4435-0069	Class 1 ENFO IV system on pump operator's panel.	$893
4435-0070	Fire Research TankVision model WL2600 Class A and WL2700 Class B foam tank level gauges.	$1,803
4435-0071	FRC Tank Vision model WLA205-A00 Tank Level A and B Foam Gauges Location: [#LOC]	$893
4435-0072	Fire Research Tank Vision Water Tank Level Gauge with Automatic Tank Filling System model ATA400 Location: [#LOC]	$2,758
4435-0074	FRC Water Tank Level Gauge with Driver for Spartan Chassis only.	$1,048
4435-0083	Innovative Controls 10 LED SL series water tank level gauge. On pump panel.	$479
4435-0084	Innovative Controls 10 LED series foam tank level gauge. On pump panel.	$686
4435-0085	Innovative Controls 10 LED SL series tank level water gauge, additional. Location: [#LOC].	$657
4435-0086	Innovative Controls 10 LED series Tank Level Water Mini Gauge. Location: [#LOC].	$513
4435-0087	Innovative Controls IC 10 LED SL series Tank Level Foam Mini Gauge Additional. Location: [#LOC].	$513
4435-0088	IC 10 LED SL series/Whelen 500 water tank level gauge package. Location of Whelen 500 tank level lights: [#LOC].	$3,759
4435-0089	IC 10 LED SL series/Whelen PSTank water tank level gauge package. Location of Whelen PSTank Strip Lights: [#LOC].	$1,756
4435-0090	Additional PSTank Level Strip-Light. Located: [#LOC].	$428
4435-0092	2.5" Class 1 compound pressure gauge (30-0-400). Discharge: [#LOC].	$133
4435-0093	3.5" Class 1 pressure gauge (30-0-400). Discharge: [#LOC].	$159
4435-0094	Class 1 4-1/2" compound pressure gauge (30-0-400 PSI).	$185
4435-0101	2.5" Span Pressure Gauge (30-0-600). Discharge: [#LOC].	$126
4435-0102	3.5" Span Pressure Gauge (30-0-600). Discharge: [#LOC].	$154
4435-0103	4.5" Span Pressure Gauge (30-0-600 PSI).	$179
4435-0104	MC Series 2000 4 Light Water Tank Level Gauge	$619
4435-0105	MC Series 2000 4 Light Series Foam Tank Level Gauge	$778
4435-0106	Dual Scale 3.5" Pressure Gauge 0-400 PSI / 100-2800 KPA. Replaces Standard	$308
4435-0108	Digital Pressure Gauge IPO Duplex Gauge	$791
4435-0109	2.5" Class 1 Pressure Gauge (30-0-600). IPO Duplex	$133
4435-0110	Pump Overheat Gauge Indicator with Audible Alarm	$445
4435-0111	MC Series 500 4 LED Series Water Tank Level Gauge	$735
4435-0112	Class 1 Pressure 4.5" Gauge (30-0-300 PSI)	$185
4435-0113	FRC TankVision/Whelen PSTank water tank level gauge package. Location of Whelen PSTank Strip-Lights: [#LOC].	$2,367
4435-0114	Digital CAFS CFM Flow Meter	$2,010
4435-0115	2.5" NoShok Pressure Gauge (-30-0-600 PSI/100-0-4000KPA). For: [#LOC].	$160
4435-0116	4" NoShock Dual Read Pressure Gauge 30-0-600PSI/100-0-4000KPA	$208
4435-0117	FRC Tank Level Foam Tank Vision Gauge Additional Location: [#LOC]	$568
4435-0118	4" NoShock Dual Read Pressure Gauge 30-0-400PSI/100-0-2800KPA	$208
4435-0119	2.5" NoShok Pressure Gauge (0-400 PSI/-0-2800KPA) For: [#LOC]	$160

4435-0120	Duplex Master Gauge (0-400 PSI) for CAFS or Industrial Foam Systems.	$497
4435-0122	Fire Research Tank Vision model WL2000 Water Tank Level Gauge w/an audible alarm low level buzzer shall be installed. The buzzer shall sound when the tank volume indicator drops to 1/4 tank.	$939
4435-0123	FRC Insight model FPA410 Ultimate Pressure Gauge LPM/KPA Location: [#LOC]	$1,982
4435-0124	6" Class 1 Compound Pressure Gauge (30-0-400 PSI).	$623
4435-0125	Class Digital Pressure Gauge Discharge: [#LOC]	$791
4435-0126	Digital Master Pressure Gauge	$755
4435-0127	3.5" Span Pressure Gauge (0-400). Discharge: [#LOC]	$162
4435-0128	Dual Read 2.5" Span Pressure Gauge (0-300 psi/0-2050KPA). Discharge: [#LOC]	$178
4435-0129	Dual Read 6.0" Span Pressure Gauge (30-0-400 psi/100-0-2800KPA)	$363
4435-0130	FRC Insight model FPA400 Ultimate Master Flow Gauge	$1,529
4435-0131	2.5" Class 1 Pressure Gauge (0-300). Discharge: [#LOC]	$140
4435-0133	FRC/Whelen 500 Water Tank Level Gauge Package Location of Whelen 500 Tank Level Lights: [#LOC]	$3,724
4435-0134	FRC Foam Tank Level Gauge "Class B Foam" with Driver for Spartan Chassis only.	$1,181
4435-0135	Class 1 Intelli/Whelen PSTank Water Tank Level Gauge Package Location of Whelen PSTank Strip-Lights: [#LOC]	$2,243
4435-0139	Span Pressure 4" Gauge (0-400 PSI)	$185
4435-0140	Span Master Intake/Pressure 4" 50/50 Gauge (30-0-300)	$310
4435-0147	Innovative Controls 14 LED SL series Water Tank Level Gauge	$485
4435-0149	IC 14 LED SL series/Whelen 500 Water Tank Level Gauge Package Location of Whelen 500 Tank Level Lights: [#LOC]	$3,789
4435-0151	4.5" Class 1 Pressure Gauge (30-0-600) Black Face w/White letters.	$197
4435-0152	2.5" Class 1 Pressure Gauge (30-0-600). Discharge with Black Face and White Letters: [#LOC]	$140
4435-0155	Dual Read 4.5" Span Pressure Gauge (30-0-600 psi/100-0-4000 KPA)	$277
4435-0156	Class 1 Intelli-40 Tank Water Tank Level Gauge with Blue LED's.	$699
4435-0157	Class 1 Intelli-40 Tank Foam Tank Level Gauge with Red LED's.	$669
4435-0158	6" Span Pressure Gauge (30-0-600)	$641
4435-0159	Dual Read 2.5" Pressure Gauge (30-0-400 psi/100-0-2800KPA). Discharge: [#LOC]	$187
4435-0160	Transmission Temperature Gauge with light and a buzzer alarm for audible warning.	$344
4435-0161	Dual Read 4.5" Pressure Gauge (30-0-400 psi/100-0-2800 KPA)	$277
4435-0162	IC10/Whelen M6 LED Water Tank Level Gauge Package Location of Whelen M6 LED Tank Level Lights: [#LOC]	$3,892
4435-0174	Sight Tube Water Tank Level Gauge. Located on driver's pump panel.	$482
4435-0175	Duplex Master Gauge (0-600 PSI) for CAFS or Industrial Foam Systems.	$569
4435-0177	Innovated Controls 14 LED SL series Tank Level Water Gauge Additional Location: [#LOC]	$681
4435-0178	Engine gauge package at the pump operator's panel.	$794
4435-0179	Deluxe engine gauge package with fuel, and transmission temp. gauge built into the tach gauge display at the pump operator's panel.	$908
4435-0180	2.5" Pressure Gauge Dual Read (0-400 PSI/-0-2700KPA) . Discharge: [#LOC]. Color: [#COL].	$234
4435-0181	4.5" Pressure Gauge (30-0-400 psi/100-0-2758 KPA). Color: [#COL].	$297
4435-0182	FRC Insight model FPA412 Ultimate Pressure Gauge LPM/KPA with back lighting Location: [#LOC]	$2,137
4435-0183	Sight Tube Water Tank Level Gauge with Indicator. Located inside pump compartment on driver's side as high/low as possible.	$482
4435-0184	2.5" NoShok pressure gauge (0-400). For: [#LOC].	$143
4435-0185	4" NoShok master pressure gauges 30-0-400PSI.	$242
4435-0186	Class 1 Tank Level Intelli 40 Water Gauge Additional Location: [#LOC]	$771
4435-0187	Class 1 Intelli-40 Tank Water Tank Level Gauge with Red LED's.	$717
4435-0188	Class 1 Intelli with (1) Whelen PSTank Water Tank Level Gauge. Location of Whelen PSTank Strip-Lights: Officer side rear of front cab door.	$1,330
4435-0190	IC10 Water with (1) Whelen PSTank Water Tank Level Gauge. Location of Whelen PSTank Strip-Lights: Officer side rear of front cab door.	$1,330
4435-0191	Dual Scale 3.5" Pressure Gauge 0-400 PSI / 100-2800KPA.. Discharge: [#LOC].	$259
4435-0193	2.5" Class 1 compound pressure gauge (0-400). Discharge: [#LOC].	$133
4435-0196	2.5" Waterway Pressure Gauge Dual Read (30-0-600 psi/100-0-4140 KPA). Discharge: [#LOC]. Color: [#COL].	$188
4435-0198	3.5" Class 1 pressure gauge (0-400). Discharge: [#LOC].	$162
4435-0199	Class 1 Intelli-40M Tank Water Tank Level Gauge.	$717
4435-0200	2.5" Class 1 pressure gauge (0-600). Discharge: [#LOC].	$129
4435-0205	3.5" LED Class 1 compound pressure gauge (30-0-400). Discharge: [#LOC]. Color: [#COL].	$236
4435-0206	4.5" LED Class 1 compound pressure gauge (30-0-400). Color: [#COL].	$237
4435-0209	2.5" LED Class 1 compound pressure gauge (30-0-400). Discharge: [#LOC]. Color: [#COL].	$233
4435-0210	PSTank Level Strip-Light Pair Located: [#LOC] (Chassis only option require sale codes for gauge and driver)	$856
4435-0211	2.5" NoShok pressure gauge (30-0-600). Non-liquid filled. For: [#LOC].	$143
4435-0212	Generator hourmeter on officer side rear compartment.	$150
4435-0213	Class 1 3-1/2" compound pressure gauge (30-0-400 PSI). Master intake and discharge gauges.	$323
4435-0214	IC10 Water with (1) Whelen PSTank Water Tank Level Gauge. Location of IC10 LED tank level gauge on operator panel. Location of Whelen PSTank Strip-Lights: Officer side rear of body facing rearward.	$1,330
4435-0215	Class 1 4-1/2" compound pressure gauge (30-0-400 PSI). Locate Auto Fill Inlet.	$185
4435-0217	Duplex 4.5" Dual Read Master Gauge (0-600 psi/0-4000KPA) for CAFS or Industrial Foam Systems.	$497
4435-0218	6" LED Backlit compound pressure gauge (30-0-400). Color: [#COL].	$522
4435-0219	Water pump digital water temperature gauge.	$340

4435-0221	Class 1 Intelli-40M Tank Foam Tank Level Gauge with red back ground.	$717
4435-0222	Class 1 Intelli-40M Tank Foam Tank Level Gauge with green back ground.	$717
4435-0224	3.5" Class 1 pressure gauge (0-400). w/Class 1 Logo. Discharge: [#LOC].	$158
4435-0226	DEF level gauge on pump operator's panel.	$330
4435-0229	2.5" LED Class 1pressure gauge (0-300). Discharge: [#LOC]. Color: [#COL].	$188
4435-0231	Class 1 Tank Level Intelli 40M Water Gauge Additional Location: [#LOC]	$715
4435-0232	4.5" LED Class 1 compound pressure gauge (30-0-300). Color: [#COL].	$305
4435-0240	Innovative Controls 10 LED SL series tank level foam gauge, additional. Location: [#LOC].	$686
4435-0241	Innovative Controls 10 LED series foam tank level gauge with a bright yellow easy to read graphics overlay. On pump panel.	$685
4435-0242	Sight Tube Water Tank Level Gauge. Located on driver's side adjacent to pump operator panel.	$481
4435-0243	4" Innovative Controls Brass Case Nite-Glo Master Pressure Gauges with Bezel. Intake 30-0-400, and Discharge 0-400.	$844
4435-0244	2.5" Innovative Controls brass case pressure gauge (0-400) with color code bezel.	$153
4435-0246	2.5" Innovative Controls stainless steel case pressure gauge (0-400) with color code bezel.	$134
4435-0247	4" Innovative Controls stainless steel case master pressure gauges with bezel. Intake 30-0-400, and discharge 0-400.	$381
4435-0248	2.5" Innovative Controls stainless steel case dual read pressure gauge (0-2750KPA/0-400PSI) with color code bezel.	$134
4435-0249	4" Innovative Controls stainless steel case master pressure gauges with bezel. Intake 30-0-400, and discharge 0-400, dual read KPA/PSI.	$381
4435-0250	2.5" Innovative Controls brass case pressure gauge (0-400) with color code bezel.	$153
4435-0251	Innovative Controls SL Plus series water tank level gauge with E-One logo at the bottom.	$565
4435-0252	Innovative Controls SL Plus series foam tank level gauge (foam tank A).	$565
4435-0253	Innovative Controls SL Plus series foam tank level gauge (foam tank B).	$565
4435-0254	4" Innovative Controls brass case master pressure gauges with bezel. Intake 30-0-400, and discharge 0-400.	$568
4435-0255	4" Innovative Controls brass case master pressure gauges with bezel. Intake 30-0-400, and discharge 0-400, dual read KPA/PSI.	$560
4435-0257	Innovative Controls SL Plus series tank level water gauge, additional. Location: [#LOC].	$580
4435-0258	Addition 4" Innovative Controls stainless steel case master pressure gauges 0-400. Locate driver side pump panel.	$220
4435-0261	4" Innovative Controls stainless steel case master pressure gauges with bezel. Intake 30-0-400, and duplex discharge 0-400 for CAFS and Industrial applications.	$1,291
4435-0262	2.5" Innovative Controls Nite-Glo brass case pressure gauge (0-400) and color code bezel with blue light gauge illumination.	$305
4435-0263	2.5" Innovative Controls Nite-Glo brass case pressure gauge (0-400) and color code bezel with red light gauge illumination.	$305
4435-0264	FRC TankVision/FRC Maxvision water tank level gauge package. Location of FRC Maxvision Strip-Lights: each side of cab towards rear	$2,464
4435-0266	2.5" Innovative Controls Nite-Glo brass case pressure gauge (0-400) and color code bezel with white light gauge illumination.	$305
4440-0005	2.5" Left Intake Akron Manual Valve.	$1,060
4440-0006	2.5" Right intake Akron manual valve.	$1,060
4440-0010	3" Left Intake Akron Manual Valve.	$1,739
4440-0011	3" Right Intake Akron Manual Valve.	$1,779
4440-0014	5" front intake without valve.	$3,373
4440-0015	5" Front Intake w/5" Air Actuated Valve and Relief.	$5,320
4440-0025	5" front intake with no valve plumbed through front bumper.	$3,770
4440-0026	5" Front Intake w/5" Air Actuated Valve and Relief Plumbed Through Front Bumper.	$5,719
4440-0027	2.5" Left Intake Hale Manual Valve	$1,081
4440-0028	2.5" Right Intake Hale Manual Valve	$1,270
4440-0029	3" Right Intake Hale Manual Valve	$2,251
4440-0031	3" Left Intake Hale Manual Valve	$1,765
4440-0036	2.5" left intake Elkhart manual valve.	$1,205
4440-0037	3" Left Intake Elkhart Manual Valve	$1,950
4440-0040	2.5" Right Intake Elkhart Manual Valve	$1,205
4440-0041	3" Right Intake Elkhart Manual Valve	$1,991
4440-0061	5" front intake w/5" Akron electric actuated valve and relief.	$6,661
4440-0062	5" Front Intake w/5" Elkhart Electric Actuated Valve and Relief.	$6,663
4440-0064	2.5" Left Intake w/3" Akron Manual Valve	$1,620
4440-0065	2.5" Left Intake w/3" Hale Manual Valve	$1,810
4440-0066	2.5" Left Intake w/3" Elkhart Manual Valve	$1,826
4440-0067	2.5" Right Intake w/3" Akron Manual Valve	$1,620
4440-0068	2.5" Right Intake w/3" Hale Manual Valve	$1,810
4440-0069	2.5" Right Intake w/3" Elkhart Manual Valve	$1,826
4440-0074	5" Front Intake without Valve Low "S" in Tray	$3,286
4440-0075	5" Front Intake w/5" Air Actuated Valve and Relief Low "S" in Bumper Tray.	$5,232
4440-0077	2.5" Side Intake Operator Control Akron Elec Valve Drivers side.	$2,818
4440-0078	2.5" Left Intake Elkhart Unibody TM Control Manual Valve	$1,313
4440-0082	2.5" Left Intake Akron Manual Valve With Integral 30 Degree Droop	$1,129
4440-0083	2.5" Right Intake Akron Manual Valve With Integral 30 Degree Droop	$1,129
4440-0084	5" Front Intake w/5" Manual Gear Actuated Valve and Relief	$6,240
4440-0089	5" Front Intake w/5" Electric Actuated Valve and Relief Low "S" in Bumper Tray	$6,573

4440-0092	3" Left Intake Elkhart Unibody Manual Valve	$1,739
4440-0093	3" Right Intake Elkhart Unibody Manual Valve	$1,779
4440-0094	2.5" Left Intake Elkhart Unibody Manual Valve w/chrom valve face.	$1,060
4440-0095	2.5" Right Intake Elkhart Unibody Manual Valve w/chrome valve face.	$1,060
4440-0096	5" Front Intake w/4" Hale Electric Actuated Valve and Relief Low "S" in Bumper Tray	$6,551
4440-0097	2.5" Right Intake Elkhart Unibody Manual Valve	$1,060
4440-0098	5" Front Intake w/5" Akron Electric Actuated Valve and Relief	$6,661
4440-0103	5" Front Intake w/5" Elect. Actuated Valve and Relief Plumbed Through Front Bumper.	$6,661
4440-0116	2.5" Left Intake w/3" Elkhart Unibody Manual Valve	$1,576
4440-0117	2.5" Right Intake w/3" Elkhart Unibody Manual Valve	$1,576
4440-0127	Elkhart 2.5" foam system intake with swing handle. For use with Williams Advent or Hot Shot foam systems. Locate to [#LOC].	$1,060
4440-0130	2.5" Right Intake w/3" Akron Manual Valve. Location: (REAR OF STREAM)	$1,620
4440-0131	2.5" Right Side intake Akron manual valve. Locate valve down low and the handle to be horizontally.	$1,221
4440-0138	2.5" right intake Akron manual valve with chrome plated end.	$1,107
4440-0140	2.5" right intake Akron manual valve, located rear of steamer IPO standard location.	$1,060
4440-0141	5" Front Intake w/5" Air Actuated Valve and Relief. A three position air control switch will be located adjacent to the front suction on top of gravel shield inboard of front suction swivel.	$5,320
4440-0146	Aux 2.5" foam system intake with swing handle. Locate to be [#LOC].	$1,060
4440-0147	2.5" Left Intake Akron Manual Valve With Integral 30 Degree Chrome Droop.	$1,310
4440-0148	2.5" Right Intake Akron Manual Valve With Integral 30 Degree Chrome Droop.	$1,310
4440-0150	2.5" Side Intake Top Mount Contro Handlel Akron manual valve. With Integral 30 Degree Droop.. Location: [#LOC].	$1,475
4440-0159	5" front intake w/5" Akron electric actuated valve and relief with 9323 valve controller.	$6,661
4440-0160	5" Front Intake w/5" Electric Akron Valve with 9323 controller and Relief Low "S" in Bumper Tray	$6,573
4445-0004	Front intake swivel 5" polished chrome.	$2,004
4445-0005	Front intake swivel 6" polished chrome.	$2,084
4445-0006	Intake Adapter 5" FNPT x 4.5" MNST for Front Intake	$407
4445-0007	Intake adapter 5" FNPT x 6" MNST for front intake.	$502
4445-0008	Intake Relief Valve - Elkhart.	$601
4445-0009	Intake relief valve, Akron.	$441
4445-0011	Valve Relief Intake - Ross 2.5"	$1,817
4445-0013	2.5" Check Valve for [#LOC] intake.	$379
4445-0014	3" Check Valve for [#LOC] Intake	$649
4445-0015	6" Check Valve for [#LOC] Steamer	$632
4445-0016	Intake relief valve, Hale 2.5".	$606
4445-0018	Intake relief valve outlet to be extended to the side of the truck under the running board. Includes tag that reads "Intake Pressure Relief Outlet - Do Not Cap".	$273
4445-0019	Intake Adapter 5" FNST x 4.5" MNST for Front Intake	$407
4445-0020	Intake Adapter 5" FNST x 6" MNST for Front Intake	$502
4445-0023	Recessed front suction intake swivel in bumper, 3" in tray.	$923
4445-0024	Intake adapter 5" FNPT x 5" MNST for front intake.	$374
4445-0025	Intake Adapter 5" FNPT x 5" MNST for Rear Intake.	$374
4445-0028	Intake bleeder/drain valve to be extended to the side of the truck.	$56
4445-0030	Intake Adapter 5" FNST x 4" MNST with LH 4" cap for Front, Rear, or Side Intake.	$407
4445-0032	Front Intake Swivel 5" Painted Job Color	$113
4445-0038	Waterous Intake Pressure Relief Valve.	$1,388
4445-0039	Intake Adapter 2-1/2"MNST X 3" FNST Swivels with plug.	$231
4445-0048	Intake pressure relief valve, Task Force Tips.	$425
4445-0049	Intake relief valve outlet to be extended to the side of the truck under the front body compartment. Includes tag that reads "Intake Pressure Relief Outlet - Do Not Cap".	$273
4445-0052	Recessed front suction intake swivel in bumper, 3" in tray using aluminum smooth plate with black Scorpion coating (IPOS diamond plate).	$1,000
4445-0054	Intake Adapter 5" FNPT x 4" MNST for Front, Rear, or Side Intake with 4" Cap.	$407
4445-0055	Intake adapter 5" FNPT x 5" MNST for front intake.The 5" front intake adapter shall be mounted so the threads approximately 2" from the bumper (Flush+2).	$374
4445-0056	Storz Connector 5" FNPT x 4" Storz 30 Degree Elbow with Tethered Cap For Rear Intake.	$426
4445-0058	5" Check Valve shall be install in front intake to prevent back flow.	$1,048
4445-0060	Front intake bleeder valve to be located adjacent to inlet at front bumper.	$86
4445-0062	2.5" Left Aux Intake shall be as located approximately 6" below main pump inlet offset to rear.	$339
4445-0068	Storz Connector 5"FNPT x 5" Storz with Tethered Cap For front intake.	$349
4445-0069	Intake Adapter 5" FNPT x 4.547 PHOENIX 6 TPI with cap for Front, or rear intake.	$605
4450-0007	1" Tank Fill Akron Manual Valve	$385
4450-0008	1.5" tank fill Akron manual valve.	$877
4450-0009	1.5" Tank Fill Hale Manual Valve	$1,016
4450-0010	2" tank fill Akron manual valve.	$1,054
4450-0011	2.5" tank fill Akron manual valve. At pump panel.	$1,128
4450-0012	1.5" tank drain Akron manual valve.	$768
4450-0014	Direct 2.5" water tank fill with Akron valve. Location: [#LOC].	$1,277
4450-0021	3" Dual Tank to Pump Akron Manual Valves - Side Panel Controlled	$1,501
4450-0022	3" tank to pump Akron manual valve.	$1,109
4450-0023	3" Tank to Pump Akron Air Actuated Valve	$1,554
4450-0032	2" Tank Fill Akron Electric Valve	$2,596
4450-0034	2.5" Tank Fill "AutoFill" Automatic Tank Fill Valve. Location: [#LOC].	$7,472

4450-0035	2.5" Direct Tank Fill Location: [#LOC]	$1,172
4450-0038	Hale 4" Air Tank to Pump for CAFSPRO Foam System.	$4,201
4450-0054	2.5" Tank Fill Hale Manual Valve	$1,483
4450-0055	Hale 4" Manual Tank-to-pump	$3,170
4450-0056	3" Air Tank to Pump for Cafspro Foam System with4" plumbing.	$2,173
4450-0057	3" Tank to Pump Hale Manual Valve	$1,265
4450-0058	2.0" Tank Fill Hale Manual Valve	$1,206
4450-0059	1.5" Tank Fill Elkhart Manual Valve	$953
4450-0060	2" Tank Fill Elkhart Manual Valve	$1,130
4450-0061	2.5" Tank Fill Elkhart Manual Valve	$1,270
4450-0062	3" Tank to Pump Elkhart Manual Valve	$1,322
4450-0064	Direct 2.5" Water Tank Fill with Elkhart Valve. Location: [#LOC]	$1,419
4450-0066	Tank-to-pump 4" Akron Air Valve.	$3,381
4450-0067	Tank-to-pump 4" Akron electric valve.	$3,457
4450-0068	3" Tank to Pump w/3.5" Waterous Valve	$1,695
4450-0070	2.5" Tank Fill Hale Electric Valve	$2,656
4450-0071	Tank-to-pump 4" Hale Electric Valve	$4,357
4450-0072	2.5" Direct Fill Line into the tank, Akron electric valve. Location: [#LOC].	$3,080
4450-0073	3" Tank to Pump w/3.5" Waterous Electric Valve	$3,276
4450-0074	2" Tank Fill Akron Valve Handwheel Control	$2,046
4450-0075	2" Tank Fill Elkhart Valve Handwheel	$2,095
4450-0076	2.5" Tank Fill Akron Valve Handwheel Control	$2,119
4450-0077	2.5" Tank Fill Elkhart Valve Handwheel Control	$2,167
4450-0078	3" Dual Tank to Pump Akron Air Valves.	$2,470
4450-0082	1.5" Tank Drain Hale Manual Valve	$866
4450-0083	1.5" Tank Drain Elkhart Manual Valve	$844
4450-0085	3" Tank to Pump Elkhart Unibody Manual Valve	$1,406
4450-0086	2" Tank Fill Elkhart Unibody Manual Valve	$1,133
4450-0087	2.5" Tank Fill "AutoFill" Automatic Tank Fill Valve. Location: [#LOC].	$7,525
4450-0088	2" Tank Fill Elkhart Unibody Electric Valve	$2,398
4450-0089	Tank-to-pump 3" Elkhart Electric Valve	$2,882
4450-0090	1.5" Direct Tank Fill Elkhart Unibody Manual Valve Left Side Panel	$1,053
4450-0091	2.5" Direct Tank Fill "AutoFill" Automatic Tank Fill Valve. Location: [#LOC].	$4,228
4450-0092	3" Tank to Pump Akron Valve Hand Wheel Control.	$2,290
4450-0093	Tank-to-pump 3" Akron Electric Valve	$3,227
4450-0099	3" Tank to Pump Elkhart Unibody Air Actuated Valve	$1,564
4450-0105	3" Tank Fill Akron Manual Valve	$1,483
4450-0107	Direct 2.5" water tank fill with 3" Elkhart manual valve. Location: [#LOC].	$1,636
4450-0108	2" tank fill Akron 9313 electric valve.	$2,596
4450-0109	2.5" Tank Fill Direct Akron Electric Valve with 9323 controller. Location: [#LOC]	$3,080
4450-0110	Tank-to-pump 4" Akron electric valve.	$3,457
4450-0114	3" Tank to Pump Electric Over Air Actuated Valve. (For Pump&Roll Operation)	$1,647
4450-0117	Tank-to-pump 4" Elkhart Unibody Electric Valve	$3,457
4450-0119	3" tank to pump Akron manual valve w/4" tank connection.	$1,131
4450-0121	3" Tank to pump Akron air actuated valve w/4" tank connection.	$1,554
4450-0122	3" Tank To Pump Akron Electric Actuated Valve w/4" Plumbing.	$3,190
4450-0123	Direct 3" Tank Fill Akron Electric Valve with control at pump operator panel valve Location: [#LOC]	$3,113
4450-0124	3" Tank To Pump Elkhart Unibody Manual Valve w/4" Plumbing.	$1,187
4450-0125	3" Tank To Pump Elkhart Unibody Air Actuated Valve w/4" Plumbing	$1,642
4450-0127	2.5" Tank Fill "AutoFill" Automatic Tank Fill Valve with IntelliTank level gauge located behind officer side pump panel. Location: [#LOC].	$7,472
4450-0132	3" Tank To Pump Elkhart Unibody Electric Actuated Valve w/4" Plumbing	$3,205
4450-0133	3" Tank To Pump Akron Air Actuated Valve w/4" Plumbing	$1,554
4450-0134	3" Tank To Pump Akron Manual Valve w/ Trident Hand Wheel Control and 4" tank connection.	$2,788
4450-0146	Tank-to-pump 3" Elkhart Unibody Electric Valve	$2,882
4450-0156	3.0" Tank Drain Akron Air Actuated Valve.	$1,554
4450-0160	Bush Pack 1" Fill with 1" Cam-Lock fitting located on pump operator pump panel. Include a 3' length of 1" clear hose.	$392
4450-0164	Direct 2.5" Tank Fill Akron Electric Valve with Dual Control (1) control at the valve and (1) at the pump operator panel. Valve location officer side rear.	$3,712
4450-0166	Additional 3" Tank To Pump Akron Manual Valve w/4" plumbing. Shall include internal plumbing to the rear of the tank into the rear sump on officer side.	$2,042
4450-0175	4" rear direct tank fill. Includes electric dual control (1)operator panel (1) at valve, with 4" Swivel Storz elbow and cap. Located to (1) left and (1) right side off the rear body	$3,664
4450-0176	3" Tank to Pump Electric Over Air Actuated Valve w/4" Plumbing.. Include (1) control in cab, and (1) control pump operator panel).	$1,646
4450-0185	3" Tank to Pump Electric Over Air Actuated Valve. (For Pump&Roll Operation)	$1,646
4450-0186	2.5" Tank Fill "AutoFill" Automatic Tank Fill Valve. Location: [#LOC].	$7,663
4450-0199	Reverse push/pull handle on 3" tank to pump Akron manual valve. The "in" position will be open and the "out" position will be closed.	$53
4450-0207	2" Tank to Pump Electric Over Air Actuated Valve. (For Pump&Roll Operation)	$1,169
4450-0210	2" tank fill Akron electric valve & Navigator Pro 9323 Controller.	$2,530
4450-0211	2.5" Direct Tank Fill "AutoFill" Automatic Tank Fill Valve. Waterous (Auto Fill) shall be "T" into both side 6" intake, front, and rear 5" intake with a special manifold and check valves.	$5,219

4450-0215	2" tank fill Akron Electric Valve & Navigator 9325 controller. Controller only, no flow or pressure reading require.	$2,554
4450-0216	Tank-to-pump 4" Akron electric valve with Navigator 9325 Controller. Controller only, no flow or pressure reading require.	$3,457
4450-0229	3" Tank Fill Akron Valve Handwheel Control	$2,232
4450-0230	3.5" Tank To Pump Akron Manual Valve w/4" Plumbing.	$1,384
4450-0236	2" Tank Fill Elkhart Unibody Valve Handwheel	$2,094
4450-0237	3" Tank To Pump Elkhart Unibody Manual Valve w/4" Plumbing. Include manual hand wheel control.	$1,751
4450-0238	Tank-to-pump 4" Akron electric valve with Navigator 9323 Controller.	$3,457
4450-0243	Direct 2.5" Water Tank Fill with Firemen Friend high flow Valve. Location: B1.	$1,467
4450-0250	2.5" Direct Tank Fill "Elkhart AutoFill" UBEC1AT Automatic Tank Fill Valve. Location: off driver side MIV intake valve.	$4,518
4455-0010	Winterization Package. System shall protect the pump, piping, firefighting systems and watertank to 0 degree. While in storage the winterization system shall be powered through shoreline connection.	$3,945
4455-0012	Winterization Package. System shall protect the pump, piping, firefighting systems and water tank to 0 degree. While in storage the winterization system shall be powered through winterization shoreline connection.	$3,945
4460-0000	Air outlet w/snubber valve. Location: [#LOC].	$256
4460-0001	Air blow-out for: [#LOC].	$241
4460-0002	Hose reel blow-out, primary.	$246
4460-0004	All tags installed on the exterior of the apparatus shall be mechanically fastened with stainless steel screws. These include but not limited to tags installed on the pump module, body, cab and bumper.	$1,205
4460-0005	Fire Shop Bezel Chrome - Standard 2.5" Gauge	$37
4460-0006	Radiator Fill Valve on Pump Panel.	$283
4460-0007	Air outlet with snubber valve and 25' hose. Location: [#LOC].	$287
4460-0008	Air Outlet Valve to operate off of CAFS System Compressor. Location: [#LOC].	$353
4460-0009	Pump panel tags, special color. (Must specify.)	$303
4460-0010	Pump panel tags - Special label. (Must specify.)	$259
4460-0017	Class 1 Color Coded Bezel Chrome - 2.5" Gauge.	$24
4460-0018	Class 1 color coded bezel, chrome - 3.5" gauge.	$28
4460-0023	Span Color Coded Bezel - 2.5" Gauge	$9
4460-0024	Span Color Coded Bezel - 3.5" Gauge	$9
4460-0026	CAFS Air Outlet Valve Recess Driver side Pump Panel with door.	$357
4460-0032	Push/Pull Rod Extrusion at pump panel to be thru bolted with nuts IPOS nut cert.	$90
4460-0033	CAFS Air outlet .75 valve with Handle and Quick Disconnect. Location: [#LOC]	$398
4460-0037	Fire Shopp NPFA Color Coded "T" handles with color coded tags.	$47
4460-0039	Innovative Controls Color Coded Bezel Chrome - 2.5" Gauge.	$102
4460-0043	Pump panel tags mechanically fastened with screws.	$398
4460-0059	Class 1 color coded bezel gauge trim ring - 2.5" Gauge	$35
4460-0061	Air outlet with 3/8" valve 1/4 turn, and 25' hose. Location:driver side	$339
4460-0062	Air outlet w/3/8" valve. Location: Officer side pump panel.	$282
4460-0067	Officer side pump panel shall include an access door to provide access to the cab tilt switch and manual jack as mounted.	$187
4460-0069	Class 1 color coded bezel gauge trim ring - 3.5" gauge.	$40
4460-0070	Fire Shop Trim Ring/Collar Chrome w/color code insert - Side Discharge/Intake	$92
4460-0074	Air blow-out for:Frt Jumpline .75" lift lever turn valve IPOS.	$286
4460-0078	Pump panel tags, special color. #1 -Red Crosslay #2 -Yellow 2" tank fill- Black 3" tank to pump- Black 2.5" Left Intake - Black 2.5 Left rear dis -Blue 3" Deck Gun - Grey 2.5 Left Dis - Pink 2.5 Right Dis- Green 4" Right Dis- Purple.	$303
4460-0085	CAFS Air Outlet Valve Recess Driver side Pump Panel with door.	$357
4460-0086	Air blow-out with Innovative Control 1/4" valve w/1/4 turn "T" handle and label for: [#LOC].	$230
4460-0087	Hose reel blow-out, with Innovative Controls 1/4" valve w/1/4 turn handle.	$230
4460-0088	Air outlet with Innovative Control 1/4" valve w/1/4 turn "T" handle and label for: [#LOC].	$230
4465-0003	FRC In-Control pressure governor. Includes engine and master pump gauges.	$5,265
4465-0005	Class 1 Captain pressure governor.	$2,786
4465-0007	Class1 Command Master pressure governor. Includes pump intake pressure and discharge pressure, throttle, relief, tank level(s), water, oil, volt and tachometer.	$5,100
4465-0008	FRC PumpBoss Pressure Governor. Includes engine gauges.	$2,589
4465-0009	FRC Pro-S Pressure Governor	$2,732
4465-0010	FRC In-Control pressure governor TGA200. Includes engine transmission and master pump gauges.	$5,322
4465-0011	Class 1 TPG pressure governor. Includes, water, oil, volt and tachometer.	$2,147
4465-0012	Fire Commander II pressure governor. Includes engine gauges, Pump Ditigal Master Gauges. Detroit engines only.	$5,093
4465-0013	FRC In-Control pressure governor. Includes engine and master pump gauges.The discharge pressure display shall show pressures from 0 to 4000 kPa. The intake pressure display shall show pressures from -100 to 4000 kPa.	$5,265
4465-0015	FRC In-Control pressure governor TGA300. Includes engine, transmission, and master pump gauges.	$3,876
4465-0017	FRC PumpBoss pressure governor PBA400. Includes engine monitor gauges.	$2,589
4465-0018	FRC InControl pressure governor TGA400. Includes engine, transmission, and master pump gauges.	$3,876
4465-0020	Class 1 TPG Plus pressure governor. Includes master intake and discharge gauges, water, oil, volt and tachometer.	$2,868

4465-0021	FRC In-Control pressure governor TGA400-A10. Includes engine, transmission, and master pump gauges.	$3,876
4465-0024	The Pressure Governor as mounted on the pump panel shall include a stainless steel shield/visor to shade the display from direct sunlight (the shield/visor shall share the same painted on finish as the pump panel if applicable).	$145
4465-0028	Class 1 Sentry pressure governor/ Twister throttle. Includes master intake and discharge gauges, water, oil, tran, volt and tachometer.	$2,756
4475-0000	Pump certification 750-2250 GPM	$2,470
4475-0002	UL Testing - the unit will be third party tested and certified by Underwriters Laboratories Inc. (UL). UL will issue a Certificate of Automotive Fire Apparatus Examination and Test stating the unit's compliance with the required pump sections of NFPA.	$2,801
4475-0009	UL Testing - the unit will be third party tested and certified by Underwriters Laboratories Inc. (UL). UL will issue a Certificate of Automotive Fire Apparatus Examination and Test stating the unit's compliance with the required pump sections of NFPA.	$2,800
5000	**Electrical**	
5010-0003	Multiplex modem kit. Includes cable, modem, and adapter harness.	$874
5010-0004	Multiplex data logger.	$619
5010-0005	Multiplex electrical system for aerials.	$5,545
5010-0008	Electrical system w/Load Manager for Tiller	$3,928
5010-0013	Vehicle data recorder - 2009 NFPA compliant. Includes occupant detection with display. Display location: [#LOC].	$2,456
5010-0015	Additional CrewGuard display for use with VDR. Location: [#LOC].	$473
5010-0017	Multiplex electrical system for Tiller aerial.	$6,686
5010-0024	Modem for use with the E-ONE multiplex electrical system.	$610
5010-0037	Multi-color touch screen display for multiplexed based electrical system. Location: [#LOC].	$1,806
5010-0039	V-MUX Electrical system for aerials.	$5,545
5010-0049	Vehicle data recorder - 2009 NFPA compliant. Includes occupant detection shown in multiplex display. E-ONE chassis only.	$2,119
5010-0050	V-MUX Electrical system for Tiller aerial.	$6,686
5010-0051	HVAC Controlled through multiplex display(s).	$1,115
5010-0052	Vista IV touch screen display for V-MUX electrical system. Location: [#LOC].	$2,040
5010-0055	Vista IV display for V-MUX electrical system. Location: [#LOC].	$1,739
5010-0057	GPS Module for V-MUX electrical system (Garmin). Includes antenna. Requires Vista display.	$1,568
5010-0059	VFD Text display for V-MUX electrical system. Location: [#LOC].	$758
5010-0065	Pump and roll screen for multiplex display. Reference specification for details.	$1,454
5010-0067	GPS Module for V-MUX electrical system (Weldon). Includes antenna. Requires Vista display with touch screen.	$1,187
5010-0070	Es-Key Multiplex electrical system for aerials.	$5,545
5010-0074	Special programming for multiplex color display (per hour). Requires engineering review and approval to determine feasibility and time.	$51
5010-0075	Vista display to have a customized sticker for legend buttons (Reference info in file for new configuration). May require special programming fee.	$507
5010-0076	Vista display to have a non-standard sticker for legend buttons (Reference info in file for existing but non-standard configuration). May require special programming fee.	$97
5010-0078	Link2 Vehicle information system for V-MUX electrical system. Does not include required subscription.	$1,437
5010-0079	Vista display translated to French.	$671
5010-0081	Pump and roll screen for multiplex display. Reference specification for details.	$1,454
5050-0000	Vanner Bravo 1800 watt inverter. For use with (2) quartz lights. Includes on/off switch in cab. Inverter to be mounted in a body compartment as close to the chassis batteries as practical (20' max cable length).	$2,717
5050-0017	Body 110 volt outlets shall have a dedicated breaker within the breaker box for no more than every (2) body mounted receptacles (single outlet, duplex, etc. as applicable). This is to provide multiple isolated circuits as required that carry no more than (2) receptacles located throughout the body.	$501
5050-0018	Vanner Tru-sine 1000 watt inverter. For use with (4) cab interior receptacles when generator is not running or shoreline is not connected. Includes on/off switch in cab. Inverter to be mounted in a body compartment as close to the chassis batteries as practical (20' max cable length).	$1,828
5050-0019	Inverter prewire for dealer/customer supplied and installed 3KW inverter. Includes 12 volt wiring and A/C cabling to breaker box. Prewire to [#LOC].	$777
5100-0000	Foot switch to control air horns located [#LOC].	$113
5100-0001	Switch circuit three way. Includes (1) additional switch. An additional switch required for more than two locations. Location: [#LOC].	$159
5100-0002	Momentary switch with 6' pendant for cab tilt. Yellow weatherproof push button at end of coiled cord. Location of switch plug-in: [#LOC]	$355
5100-0006	Foot switch to control Q2B located [#LOC].	$113
5100-0007	Foot switch to control electronic siren located [#LOC].	$113
5100-0009	Audible door ajar alarm wired through door ajar light.	$59
5100-0010	Additional push button hose reel switch. Location: [#LOC].	$177
5100-0011	Switch 12V for 120-240V (EA). Location: [#LOC].	$407
5100-0014	Air horns to be interlocked through the master warning switch.	$95
5100-0015	Back-up alarm override momentary switch located at the cab dash. The switch will allow for overriding the back-up alarm and reset after transmission is shifted again.	$56

5100-0019	Additional amber warning light override momentary switch located at the cab warning light switch panel. The switch will allow for overriding the rear additional amber warning lights and reset after ignition is turned off.	$306
5100-0020	Switch additional 12 volt/15 amp toggle. Location and function: Under driver side cab dash for master battery override.	$191
5100-0021	Opticom switch wired through upper level warning switch.	$72
5100-0022	Push-button hose reel switch. Location: [#LOC].	$177
5100-0029	Stirrup style hose reel switch. Location: [#LOC].	$177
5100-0036	Additional programming instructions: [#LOC].	$118
5100-0038	Hose Reel rewind switch located in rubrail.	$90
5100-0039	Foot switch(es) mounted on a 45 degree bracket.	$77
5100-0042	Ramsey control with 3' cord for cab tilt in addition to standard toggle. Red/Black weatherproof push buttons at end of cord. Location of switch plug-in: [#LOC].	$355
5100-0044	Rear cab heater switch. Function and location: [#LOC].	$191
5100-0045	Thermostatic controls for pump compt heaters. Thermostat set at freezing temp.	$241
5100-0046	Cut-off switch for Q2B main power. Switch to be accessible from driver's seat.	$259
5100-0047	Switch household 110V w/ weaterproof cover. Location and function: cab mounted next to air compressor for 120V air compressor	$191
5100-0048	Magnetic door ajar switches IPO std for all body compt doors.	$691
5100-0049	Ramsey control with 8' cord for cab tilt in addition to standard toggle. Red/Black weatherproof push buttons at end of cord. Location of switch plug-in: [#LOC].	$355
5100-0050	Push button test switch for tank or foam level gauge, push button wired "hot" to batteries to allow checking tank level in fire station without having to power up truck electrical system. Located on operator pump panel.	$332
5100-0055	Switch for hydraulic gen to be located on officer side overhead console IPOS.	$118
5100-0056	Hose deployment switch in front bumper tray. Includes hinged plate on bottom of bumper tray with switch on floor and indicator light on pump panel. Requires tray without slats. Location: [#LOC].	$562
5100-0059	Back-up alarm / rear back up lights override momentary switch located at the cab dash. The switch will allow for overriding the back-up alarm & back-up lights and reset after transmission is shifted again.	$56
5100-0060	Switch for 12V quartz lights to be located on officer side overhead console IPOS.	$118
5100-0061	Door ajar alarm override momentary switch located at the cab dash. The switch will allow for overriding the door ajar alarm and reset after transmission is shifted again.	$191
5100-0063	Ramsey control with 10' cord for cab tilt. Red/Black weatherproof push buttons at end of cord. Location of switch plug-in: next to manual cab tilt pump	$355
5100-0072	Locate Q2B brake in officer side overhead console IPO standard location of driver side overhead console.	$54
5100-0087	Ramsey control plug-in for cab tilt in addition to standard toggle. Does not include tether controller. Location: [#LOC].	$200
5100-0088	Linemaster Twin 491-S foot switch to control air horns and Q2B located [#LOC].	$362
5100-0089	Foot switch to control electric fire bell located [#LOC].	$113
5100-0090	Foot switch to control Scream Eagle siren located [#LOC].	$113
5100-0091	Switch 12V for 110-240V (EA). Location: cab switch panel for rear body quartz light(s).	$407
5100-0094	Ramsey control with 15' cord for cab tilt in addition to standard toggle. Red/Black weatherproof push buttons at end of cord. Location of switch plug-in: [#LOC].	$355
5100-0095	Switching controlled through the Multiplex display for 120-240V devices (EA). The 120-240V Multiplex switching utility shall be used for: [#LOC].	$407
5100-0098	Switch additional rocker lock-out safety style. Location and function: [#LOC].	$191
5100-0099	Momentary rocker switch for the Federal Rumbler (secondary siren) located on the driver and officer side overhead panels. The switches will allow for overriding the Federal Signal Rumbler siren and reset after ignition is turned off.	$306
5100-0100	Switch additional (2) position shall be installed and properly labeled to enable operator to activate the OEM traffic horn or air horn. The switch shall be located: rear of body driver side approximately 65" above ground level.	$191
5100-0102	A cab interior audible alarm and hazard light. The light shall be blue in color and 2" diameter, The alarm and hazard light shall be wired to the light tower to provide a clear indicator of when the light tower is raised or not in the bedded position. The light shall be mounted in the vicinity of the door ajar hazard light.	$141
5100-0103	Locate Q2B brake on lower dash between touch screens IPOS.	$54
5100-0104	Air horn switch at rear body. Switch to be labeled "Air Horn". Location: driver side rear of body approx. eye level (if applicable).	$134
5100-0105	Switch momentary. Head lights, running lights, and tail lights (on with ignition) override momentary switch located at the cab dash. The switch will allow for overriding the head lights, running lights, and tail lights (turning them off momentarily) after the ignition has been turned on.	$191
5100-0106	Thermostatic control for compartment heater. Thermostat set at 60 degrees Fahrenheit to prevent freezing. Location: [#LOC].	$123
5100-0107	Cut-off switch for Q2B main power. Switch to be accessible from officer's seat.	$259
5100-0108	Switch circuit three way 12V for 120-240V (EA). Includes (1) additional 12V for 120-240V switch. An additional switch required for more than two locations. Location: [#LOC].	$407
5100-0109	Audible alarm to sound when water level is below 1/4 tank remaining.	$272
5100-0112	Ramsey control on officer side cab dash with 3' cord to operate Q2B and air horns. Red switch Q2B, Black air horns.	$335
5100-0115	Monarch control for cab tilt in place of standard toggle.	$390
5100-0116	Weldon 4-button V-MUX switch module. Location [#LOC].	$390

5100-0117	Switch, additional momentary 12 volt/15 amp. Location and function: [#LOC].	$191
5100-0118	Door ajar indicator switches for all SCBA air bottle storage compartment doors on body wired to "Door Open" indicator inside cab.	$53
5100-0119	Rear cab heater Eaton guarded switch. Function and location: [#LOC].	$191
5100-0120	Switch additional guarded toggle. Location and Function: driver side rear of body for rear flood lights.	$191
5100-0125	Door ajar indicator switches for all SCBA air bottle storage compartment doors on cab wired to "Door Open" indicator inside cab.	$53
5100-0127	Switch panel three way. Includes (7) additional switches. An additional switch required for more than two locations. Location: L1 adjacent to breaker box for front brow lights, driver 120V cab/body scene lights, officer 120V cab/body scene lights, driver 12V cab/body scene lights, officer cab/body 12V scene lights and rear 12V scene lights.	$1,110
5100-0128	Red flip cover for toggle switch. Location: [#LOC].	$18
5100-0130	Weatherproof Eaton rocker switches on pump panel ipo toggle switches.	$219
5100-0131	Foot switch(es) mounted on a 30 degree bracket.	$77
5110-0003	High impact orange ABS plastic handheld spotlight SL-45 Location: [#LOC].	$203
5110-0004	Alternating flasher for headlights.	$326
5110-0005	Pre-wire for trailer hitch. Includes stop, left turn, right turn, marker and ground wires. Does not include connector.	$230
5110-0007	Audible indicator in cab with rear button. The rear button will be located on the driver's side at the rear behind the hand rail (if equipped).	$333
5110-0008	Audible indicator in cab with rear buttons. The rear buttons will be located one each side at the rear, behind the hand rail (if equipped).	$367
5110-0009	Clock Digital 12/24 Waterproof mounted in cab officer's overhead dash.	$605
5110-0011	Vehicle Information Control Center for E-One Multiplexed trucks located on Driver's Side.	$5,740
5110-0012	Vehicle Information Control Center for E-One Multiplexed trucks located on Officer's Side.	$5,740
5110-0013	Vehicle Information Control Center for E-One Multiplexed trucks located on Driver's Side. Display Only, No computer.	$2,438
5110-0014	Vehicle Information Control Center for E-One Multiplexed trucks located on Officer's Side. Display Only, No computer.	$2,438
5110-0015	Vehicle Information Control Center for E-One Multiplexed trucks located at center of engine cover mounted on swivel bracket.	$6,100
5110-0016	Emi Testing and Certification	$3,898
5110-0017	Back-up alarm 97 dB.	$99
5110-0018	12 volt 12 gauge constant hot lead (24" long) with ground wire. Location: [#LOC].	$77
5110-0019	Audible indicator in cab with rear button. Locate (1) buzzer in tractor cab wired to foot switch on right side of tiller cab. (1) buzzer in tiller cab wired to push button switch in tractor cab center of dash. Includes indicator lights wired to each buzzer. Provide labels that read: 1-STOP, 2-GO, 3-BACKUP in both cabs.	$955
5110-0020	Starter safety circuit for tillerman cab. Locate on the driver side floor of tillerman cab. Includes service override switch under cab dash within easy reach of driver position.	$567
5110-0024	Back up alarm Grote 107 dB(A).	$254
5110-0025	Back up horn system. Includes 12v independent horn (NAPA 730-1047) below officer's side dash, 12v independent horn (NAPA 730-1047) at rear of body and Ramsey control switch with 25' tether at rear of body.	$796
5110-0026	12 volt 12 gauge wired through ignition lead (24" long) with ground wire. Location: [#LOC].	$77
5110-0032	Clock digital 12/24 waterproof mounted in [#LOC].	$605
5110-0037	Additional wiring instructions: [#LOC].	$352
5110-0039	Clock Digital 12/24 Waterproof mounted in cab officer's switch panel.	$605
5110-0040	Indicator light. Color: [#COL]. Location and function: [#LOC].	$111
5110-0042	Trailer wiring and connector for 2009 NFPA 1901 Type I, Type II or Type III trailer. Includes model 12-907 connector on body. Stop/turn/tail circuits shall be connected, remaining wires to be coiled up for future use. Trailer end 12-906 shipped loose.	$444
5110-0043	Back-up alarm Federal Reactor model 210350 self-adjusting.	$173
5110-0044	ABS cover for multiplex PDMs' located in the pump module.	$91
5110-0045	Radio interface cable-run a 7-conductor 20 gauge wiring (578865) from the pump panel microphone box to the center overehead area, leave a 30" coil of wire at each end.	$537
5110-0052	12V power distribution module. Includes (6) battery hot and (6) switched hot circuits. 100 amps max (IATS). Location: [#LOC].	$295
5110-0060	12 volt 4 gauge constant hot lead (24" long) with ground wire. Location: [#LOC].	$232
5110-0065	Lighted bumper guide (PR). Bores model 848211 located (1) each side of front bumper extension.	$392
5110-0067	Back up alarm Preco 97 dB(A) warble tone.	$258
5110-0068	Handheld flashlight, orange Streamlight Litebox flashlight with vehicle mount system. Location: [#LOC].	$182
5110-0069	Back up alarm ECCO model 410 97 dB(A) grommet mount.	$199
5110-0070	Vehicle Information Control Center for E-One Multiplexed trucks swivel pedestal mount located at center between driver and officer. Mid engine cabs only.	$6,100
5110-0079	Back up alarm Ecco model SA917 87-112dB.	$226
5110-0087	Tekonsha model Prodigy 2 trailer brake controls wired to connector. Control located in cab accessible to driver. Requires 9-pin connector.	$846
5110-0088	Lighted bumper guide (PR) with angled support brackets. Bores model 848211 located (1) each side of front bumper extension.	$508
5110-0089	Back-up alarm Ecco model 575 107dB.	$166
5110-0090	Breaker box grounding cable. 10' 2Ga cable attached to ground side of breaker box. Includes clamp on end of cable for use with aerial ground pad.	$222

5110-0109	Indicator light, Weldon 9186-2300. Color: [#COL]. Location and function: [#LOC].	$111
5110-0112	Back up alarm Preco model 1040.	$172
5110-0117	ATIMS vehicle "Brick" system.	$5,057
5110-0124	Audible indicator in cab with rear buttons. The rear buttons will be located [#LOC].	$367
5110-0132	Indicator light. Color: Green. Location and function: driver side overhead for jake brake "on".	$111
5110-0133	12 volt 10 gauge constant hot lead (24" long) with ground wire. Location: [#LOC].	$90
5110-0136	Collision Avoidance Systems model CAS-4RF rear obstacle detection and proximity system. Includes 4 sensors at rear of vehicle and speaker in cab.	$1,794
5110-0138	Regen indicator light with warning tag . Whelen 500 series TIR6 amber light located in rubrail above exhaust end. Includes warning tag to read "High Exhaust Heat When Flashing". Light to be wired through indicator in cab and park brake.	$298
5110-0139	12 volt 14 gauge wired through ignition lead (36" long) with ground wire. Location: [#LOC].	$92
5110-0140	12 volt 10 gauge wired through ignition lead terminated in a junction box with ground wire. Location: [#LOC].	$92
5110-0145	Pre-Wiring for trailer hitch should include a hot 12vdc and back-up light wire at the connector and a wire from the connector to the cab for future electric brake unit in cab. In the cab there should be a wire labeled for brake lights to connect to future electric brake unit. Connector sold separately.	$230
5110-0146	Cole-Hersee trailer tail light converter model 48000. Trailer connector sold separately.	$301
5110-0149	Generator power shall be supplied to the command desk area. One (1) 12/3 cable shall supply 20 amps with 10' of wire coiled at the command desk area. The wires shall be clearly marked to identify them as 110V/20A generator power.	$334
5110-0150	Shoreline power shall be supplied to the command desk area. One (1) 12/3 cable shall supply 20 amps with 10' of wire coiled at the command desk area. The wires shall be clearly marked to identify them as 110V/20A shoreline power.	$334
5110-0153	12V power distribution module. Includes (6) battery hot and (6) switched hot circuits. 100 amps max (IATS). Includes circuit breakers ipo fuses. Location: [#LOC].	$295
5110-0154	Dow Corning 738 white electrical sealant. Apply to all exposed electrical connections.	$317
5110-0155	Customer supplied handheld spotlight SL-45 shall be mounted in place. Location: [#LOC].	$166
5110-0158	12 volt 12 gauge lead (24" long) with ground wire wired to battery saver. Location: [#LOC].	$77
5110-0162	Wiring instructions: Dedicated ground wire for 12V distribution module located at driver and officer 3x3 post.	$125
5110-0169	Aluminum smooth plate cover for foam controller shall be located on back of controller.	$193
5130-0000	Cord reel 150 feet of 12/3 black cord installed on the [#LOC] with an electric rewind.	$1,747
5130-0001	Cord reel electric with 200' of 10/3 black cable. Locate [#LOC].	$2,064
5130-0002	Cord reel electric with 200' of 10/3 yellow cable. Location(s): [#LOC].	$2,330
5130-0003	Cord reel electric with 200' of 10/4 black cable. Location: [#LOC].	$2,324
5130-0004	Cord reel electric with 200' of 10/4 yellow cable. Location [#LOC].	$3,013
5130-0005	Ground reel with 20' of cable and 3' rod to be used for grounding unit while using the generator.	$396
5130-0006	Cord reel rollers mounted on reel in [#LOC].	$337
5130-0007	Cord connector. Daniel Woodhead 3 wire NEMA 5-15 straight blade female located on cord for reel in [#LOC].	$78
5130-0008	Cord connector. Daniel Woodhead 3 wire NEMA L5-15 twist lock female located on cord for reel in [#LOC]	$81
5130-0009	Cord connector. Daniel Woodhead 3 wire NEMA L5-20 twist lock female located on cord for reel in [#LOC].	$110
5130-0010	Cord connector. Daniel Woodhead 4 wire NEMA L14-20 twist lock female located on cord for reel in [#LOC].	$110
5130-0011	Cord connector. Daniel Woodhead 3 wire NEMA L6-20 twist lock female located on cord for reel in [#LOC]	$110
5130-0012	Junction box Circle-D with four (4) 3-wire NEMA L5-15 110 volt 15 amp twist lock receptacles. Located on cord for reel in [#LOC].	$711
5130-0013	Junction box Circle-D with four (4) 3-wire NEMA L5-20 110 volt 20 amp twist lock receptacles. Located on cord for reel in [#LOC].	$711
5130-0014	Circle D wall/floor mounting box. Locate box for use with reel in or on [#LOC].	$140
5130-0015	Junction box Circle-D with two (2) 15 amp straight blade and two (2) 20 amp twist lock receptacles. Located on cord for reel in [#LOC].	$898
5130-0016	Junction box Circle-D with all twist lock, 2-120V and 2-240V outlets. Located on cord for reel in [#LOC].	$880
5130-0017	Junction box Woodhead with four (4) NEMA L5-15 110 Volt 15 Amp twist lock receptacles. Located on cord for reel in [#LOC].	$1,414
5130-0018	Junction box, Daniel Woodhead, with four (4) NEMA L5-20 110 volt 20 amp twist lock receptacles. Located on cord for reel in [#LOC].	$1,130
5130-0022	Cord reel rollers mounted through panel. Location(s): [#LOC].	$337
5130-0024	Electric cord reel rewind switch. Switch located [#LOC].	$113
5130-0026	Cord connector. Fire Power 3 wire 20A/110V female located on cord for reel in [#LOC].	$569
5130-0027	Cord connector. Duraline 4 wire 20A/220V female located on cord for reel in [#LOC].	$150
5130-0028	Cord reel rollers mounted on reel.	$337
5130-0030	Junction box Circle-D with one (1) straight blade and three (3) twist lock receptacles. Located on cord for reel in [#LOC].	$898
5130-0031	Cord reel electric/manual back-up with 200' of 10/3 black cable. Crank handle mounted next to reel. Locate [#LOC]	$2,479
5130-0032	Cord reel electric with 150' of 10/4 yellow cable. Location [#LOC]	$3,013
5130-0033	Junction box Circle D with four (4) 3-wire NEMA 5-15 110 volt 15 amp straight blade receptacles. Located on cord for reel in [#LOC].	$711

5130-0034	Cord reel Akron electric with 200' of 10/3 yellow cable. Location(s): [#LOC].	$2,225
5130-0035	Junction box Circle-D with (3) L5-15 and (1) L5-20 110Volt twist lock receptacles. Located on cord for reel in [#LOC].	$711
5130-0036	Diamond plate cord reel cover over reel. Use rollers provided with reel on cover IPO E-One supplied if applicable. Location: [#LOC]	$589
5130-0037	Cord reel Akron electric with 200' of 10/4 yellow cable. Location(s): [#LOC]	$2,911
5130-0038	Junction box Circle-D with (2) L5-20 twist lock and (2) 5-20 110Volt straight blade duplex receptacles. Located on cord for reel in [#LOC].	$711
5130-0039	Roller support bracket up high at compt opening for reel in [#LOC].	$255
5130-0040	Hannay PWM (Pulse Width Modulator) control for reel. Mounted next to switch for cord reel in [#LOC].	$633
5130-0041	Cord reel rollers bracket mounted on top of [#LOC].	$337
5130-0042	Junction box Circle-D with four (4) 3-wire Nema 5-20 110Volt 20 Amp duplex receptacles. Located on cord for reel in [#LOC].	$788
5130-0043	Cord reel Akron electric with rear mounted motor. Includes 200' of 10/3 yellow cable. Location(s): [#LOC].	$2,534
5130-0044	Junction box Akron with (2) 5-20 125v 20 Amp duplex recepts and (2) L5-20 125v 20 Amp twist lock recepts. Located on cord for reel in [#LOC].	$560
5130-0045	Akron model EJB-VMT-TP mounting box. Locate box for use with reel in or on [#LOC].	$273
5130-0046	Junction box Circle-D with one (1) 5-20 straight blade and three (3) L5-20 twist lock receptacles. Box wired as 240v with individual circuit breakers on box. Located on cord for reel in [#LOC].	$898
5130-0048	Junction box Circle-D with (2) NEMA 5-20 120V GFCI duplex and (2) NEMA L6-20 220V twist lock receptacles. Located on cord for reel in [#LOC].	$898
5130-0049	Cord reel electric for 200' of 10/3 cable. Cable not included. Location(s): [#LOC]	$2,084
5130-0054	Cord reel electric with 200' of 8/3 black cable. Locate [#LOC]	$3,535
5130-0055	Cord reel rollers mounted on support bracket. Location(s): [#LOC]	$337
5130-0056	Junction box Woodhead with (3) NEMA L5-15 110 Volt 15 Amp twist lock receptacles and (1) NEMA 5-20 110 Volt 20 Amp household receptacle. Located on cord for reel in [#LOC].	$1,414
5130-0057	Mounting box for Woodhead junction box. Locate box for use with reel in or on [#LOC].	$255
5130-0058	Junction box Akron with four (4) 3-wire NEMA L5-20 110 volt 20 amp twist lock receptacles. Located [#LOC].	$560
5130-0059	Junction box Circle-D with four (4) FirePower FP11 110Volt 20 Amp receptacles. Located on cord for reel in [#LOC].	$1,159
5130-0061	Cord reel electric with 250' of 10/3 black cable. Locate [#LOC].	$2,435
5130-0062	Junction box Circle-D with (2) 5-20 straight blade and (2) twist lock receptacles; (1) L5-20 and (1) L5-15. Located on cord for reel in [#LOC].	$898
5130-0063	Cord reel electric with 200' of 12/3 black cable. Locate [#LOC].	$2,435
5130-0067	Junction box Akron with (4) 5-20-GFCI 125v 20 Amp duplex recepts. Includes 12" pigtail with L14-20 connector and rubber feet. Located on cord for reel in [#LOC].	$560
5130-0069	Cord reel electric with 250' of 10/3 yellow cable. Locate [#LOC].	$2,768
5130-0070	Cord connector. Hubbell 4 wire NEMA L14-20 twist lock female located on cord for reel in [#LOC]	$110
5130-0073	Cord reel electric low profile with 200' of 10/3 yellow cable. Location(s): [#LOC].	$2,953
5130-0079	Cord reel electric with 150' of 10/3 yellow cable. Location(s): [#LOC].	$2,139
5130-0080	Junction box Circle-D with four (4) 3-wire NEMA L5-20 110 volt 20 amp GFCI twist lock receptacles. Located on cord for reel in [#LOC].	$898
5130-0081	Cord reel electric model ECR 1620-17-18 with 200' of 10/4 yellow cable. Location [#LOC].	$3,013
5130-0082	Cord connector. Daniel Woodhead 3 wire NEMA L5-30 twist lock female located on cord for reel in [#LOC].	$154
5130-0083	Slideout cord reel roller assembly. For cord reel located in [#LOC].	$936
5130-0084	Junction box Circle-D with one (1) 15 amp straight blade and three (3) 15 amp twist lock receptacles. Located on cord for reel in [#LOC].	$898
5130-0087	Cord connector. Daniel Woodhead 4 wire NEMA L14-30 twist lock female located on cord for reel in [#LOC].	$154
5130-0088	Junction box Woodhead with two (2) NEMA L5-20 110V 20A twist lock and two (2) NEMA 5-20 110V 20A duplex receptacles. Located on cord for reel in [#LOC].	$1,283
5130-0089	Swing out roller assembly for cable reel. Roller is Hannay Reels w/ 2.5" opening. Location: [#LOC]	$337
5130-0090	Junction box Akron with (4) 5-15 120v 15 Amp duplex recepts. Located on cord for reel in [#LOC].	$560
5130-0091	Roller support bracket for reel. Rollers and bracket shall be mounted: [#LOC].	$255
5130-0094	Cord reel electric with 200' of 10/3 black cable model ELFCR1622-14-16. Locate [#LOC].	$2,064
5130-0095	Cord reel Akron electric low profile with 200' of 10/3 black cable with rollers and cord stop. Location(s): [#LOC].	$2,664
5130-0098	Cord reel Akron electric low profile with 200' of 10/3 yellow cable with rollers and cord stop. Location(s): [#LOC].	$2,940
5130-0101	Cord reel electric with 150' of 10/4 yellow cable. Reel to include strap (Comet) brake to provide drag pressure to reel axle. Location [#LOC]	$3,089
5130-0102	Junction box Circle-D with four (4) 3-wire 120Volt 20 Amp Hubbel model HBL7310B twist lock receptacles. Located on cord for reel in [#LOC].	$898
5130-0103	Junction box Circle-D with four (4) 3-wire NEMA L5-20 110 volt 20 amp GFCI twist lock receptacles with 220V feed. Located on cord for reel in [#LOC].	$898
5130-0104	Cord reel electric with 150' of 10/4 black cable. Location: [#LOC].	$1,900
5130-0105	Cord reel electric CMW 6020 with 200' of 10/3 yellow cord. Location: [#LOC].	$5,640
5130-0106	Cord reel Akron electric low profile with 200' of 10/3 black cable with rollers and cord stop. Location(s): [#LOC].	$2,664

5130-0107	Cord reel electric with 200' of 12/3 yellow cable. Locate [#LOC].	$2,501
5130-0108	Cord reel electric with 150' of 10/4 yellow cable. Reel has 3 conductor cover IPO 4 (for narrower reel). Location: [#LOC].	$3,013
5130-0109	Junction box Circle D with four (4) 3-wire 20 amp receptacles, two (2) twist lock NEMA L 5-20 and two (2) straight blade NEMA 5-20 receptacles. Located on cord for reel in [#LOC].	$766
5130-0111	Stirrup style cord reel rewind switch. Location: [#LOC].	$177
5130-0112	Junction box Akron with (3) NEMA L5-20 GFCI twistlock and (1) NEMA L6-20 220V twist lock receptacle. Located on cord for reel in [#LOC].	$656
5130-0114	Hydraulic/Air reel rollers mounted through panel. Location(s): [#LOC].	$337
5130-0115	Junction box Akron with (2) NEMA L5-15 GFCI twistlock and (2) NEMA L14-20 120V/240V twist lock receptacle. Located on cord for reel in [#LOC].	$656
5130-0116	Optional Comet (friction) brake for Hannay cord reel (EA).	$70
5130-0120	Cord reel electric painted black from manufacturer with 200' of 10/3 black cable. Locate [#LOC].	$2,064
5130-0121	Junction box Akron with four (4) 3-wire NEMA L5-15 110 volt 15 amp twist lock receptacles. Located [#LOC].	$560
5130-0122	Cord connector. Hubbell 3 wire NEMA L5-15 twist lock female with yellow seal-tite cover located on cord for reel in [#LOC].	$127
5130-0123	Smooth plate cord reel cover with black Durabak finish over reel. Use rollers provided with reel on cover IPO E-One supplied if applicable. Location: [#LOC]	$707
5130-0124	Junction box Circle-D with (3) L5-20 twist lock and (1) 5-20 110V straight blade duplex receptacles. Located on cord for reel in [#LOC].	$711
5130-0125	Cord reel Hannay electric low profile with 200' of 10/3 black cable. Locate [#LOC].	$2,664
5130-0126	Junction box Circle-D with (1) L5-20 twist lock and (3) 5-15 110Volt straight blade duplex receptacles. Located on cord for reel in [#LOC].	$711
5130-0127	Cord reel electric with 175' of 10/3 yellow cable. Location [#LOC].	$3,013
5150-0003	Weldon auxiliary turn signal model 9186-8560 (PR). Location: [#LOC]	$199
5150-0006	Whelen 600 series LED horizontal mount tail lights. Includes LED stop/tail, arrow turn and halogen back-up lights with horizontal Cast 3 housing and weatherproof connectors.	$1,293
5150-0007	Whelen 600 series LED vertical mount tail lights. Includes LED stop/tail, arrow turn and halogen back-up lights with vertical Cast 3 housing and weatherproof connectors.	$1,263
5150-0008	Whelen 600 series LED vertical mount tail lights. Includes LED stop/tail, arrow turn and halogen back-up lights with vertical Cast 4 housing and weatherproof connectors.	$1,545
5150-0010	Whelen 600 series LED horizontal mount tail lights. Includes LED stop/tail, turn and halogen back-up lights. Available on G067, L193 and Q100/114 only. With weatherproof connectors.	$1,388
5150-0011	Whelen 600 series LED vertical mount tail lights. Includes LED stop, tail, turn and halogen back-up lights with vertical Cast 3 housing and weatherproof connectors.	$1,361
5150-0012	Whelen 600 series LED vertical mount tail lights. Includes LED stop/tail, turn and halogen back-up lights with vertical Cast 4 housing and weatherproof connectors.	$1,450
5150-0013	Whelen 600 series horizontal mount taillights. Includes incandescent stop/tail, arrow turn and halogen backup light. Available on G067 and L193 only. With weatherproof connectors.	$609
5150-0015	Whelen 600 series vertical mount taillights. Includes incandescent stop/tail, arrow turn and halogen backup lights with vertical Cast 4 housing and weatherproof connectors.	$703
5150-0017	License plate light LED with chrome housing located at the rear of the body.	$131
5150-0019	Marker lights addtional red LED Trucklite Model 21 (PR). Location: [#LOC]	$168
5150-0020	Weldon model 1010 LED / incandescent tail lights. Includes red LED stop/tail/turn and clear incandescent back-up.	$365
5150-0023	Weldon Model 1010 LED / incandescent tail lights. Includes red LED stop/tail, amber LED turn and clear incandescent back-up.	$529
5150-0026	Marker light LED body/cab package. E-ONE custom cab with aerial ladder, Mid-Mount platform or Bronto bodies only.	$1,377
5150-0028	Marker light LED body/cab package. E-ONE custom cab with rear mount aerial platform bodies only. Includes (3) marker lights on front of platform.	$1,625
5150-0032	Bracket license plate at rear of body.	$38
5150-0035	Trucklite LED taillights. Includes 4" red LED stop/tail, amber LED turn and clear incandescent backup.	$642
5150-0036	Truck-Lite LED tail lights. Includes 4" red LED stop/tail, amber LED turn and clear LED back-up.	$815
5150-0037	Zico backing light (PR) with white pained housing model #ZQL-RV-H7614. Location: [#LOC].	$382
5150-0039	Marker lights Britax amber/red rubber housed mounted on the rear body corners angled down.	$286
5150-0042	Federal Signal LED tail lights. Includes 4" diameter red LED stop/tail, amber turn and LED clear back-up.	$554
5150-0050	Zico backing lights (PR) with polished stainless steel housing model ZQL-SS-H7614. Location: [#LOC].	$590
5150-0052	Code 3 65STK4 vertical mount tail lights. Includes red LED stop/tail, amber LED turn and white LED back-up lights.	$1,968
5150-0053	Code 3 65PKG vertical mount tail lights. Includes red LED stop/tail, amber arrow LED turn and white LED back-up lights.	$1,602
5150-0055	Whelen 600 series LED horizontal mount tail lights. Includes LED stop/tail, arrow turn and back-up lights with horizontal Cast 3 housing and weatherproof connectors.	$2,044
5150-0056	Whelen 600 series LED vertical mount tail lights. Includes LED stop/tail, arrow turn and back-up lights with vertical Cast 3 housing and weatherproof connectors.	$2,015
5150-0057	Whelen 600 series LED vertical mount tail lights. Includes LED stop/tail, arrow turn and back-up lights with vertical Cast 4 housing and weatherproof connectors.	$2,297
5150-0058	Federal Signal QuadraFlare LED vertical mount tail lights. Includes LED stop/tail, arrow turn and back-up lights with vertical Cast 4 housing and weatherproof connectors.	$1,260

5150-0059	Federal Signal QuadraFlare LED vertical mount tail lights. Includes LED stop/tail, arrow turn and back-up lights with vertical Cast 3 housing and weatherproof connectors.	$1,100
5150-0060	Federal Signal QuadraFlare LED vertical mount tail lights. Includes LED stop/tail, turn and back-up lights with vertical Cast 3 housing and weatherproof connectors.	$1,203
5150-0061	Federal Signal QuadraFlare LED horizontal mount taillights. Includes LED stop/tail, turn and backup lights with horizontal Cast 3 housing and weatherproof connectors.	$1,100
5150-0062	Federal Signal QuadraFlare LED horizontal mount taillights. Includes LED stop/tail, arrow turn and backup lights with horizontal Cast 3 housing and weatherproof connectors.	$1,281
5150-0063	Double chrome trim ring for Weldon 1010 tail lights (PR).	$266
5150-0065	Marker light LED body/cab package. E-ONE custom cab with tiller aerial ladder body only.	$1,465
5150-0068	Marker lights Britax LED amber/red rubber housed mounted on the rear body corners angled down.	$392
5150-0071	Light Whelen model PSR00XRR LED (EA) red 3rd brake light. Location: [#LOC].	$189
5150-0073	Marker lights additional red LED Whelen Model 50R00MRR (PR). Location: [#LOC]	$244
5150-0074	Marker lights additional amber LED Whelen Model 50A00MAR (PR). Location: [#LOC]	$244
5150-0075	Whelen 600 series LED vertical mount taillights. Includes LED stop/tail, arrow turn and backup lights with individual chrome flanges and weatherproof connectors.	$2,724
5150-0076	Whelen 700 LED auxiliary chevron turn signal (PR) with 15 degree castings. Location: [#LOC]	$712
5150-0077	Whelen 900 series LED tail lights. Includes LED stop/tail, arrow turn and back-up lights with weatherproof connectors.	$4,912
5150-0078	Truck-Lite model #35720 guards for front LED clearance lights on cab.	$90
5150-0080	Weldon auxiliary turn signal model 9186-8580 LED (PR). Location: [#LOC].	$272
5150-0081	Light Whelen 500 model 5SR00XRR red LED 3rd brake light (ea). Location: [#LOC].	$213
5150-0082	Whelen 600 series LED vertical mount taillights. Includes LED stop/tail, arrow turn in vertical Cast 3 housing with 900 series halogen backup lights down low and weatherproof connectors.	$1,678
5150-0086	Marker light LED body/cab package. E-ONE custom cab with aerial ladder, Mid-Mount platform or Bronto bodies only. Outer cab roof lights to be Weldon model 5060.	$1,377
5150-0091	Whelen M6 series LED vertical mount tail lights. Includes LED stop/tail, arrow turn and back-up lights with vertical 4 light housing and weatherproof connectors.	$1,599
5150-0098	Truck-Lite auxiliary turn signal model 60117Y LED (PR) with model 60719 stainless steel cover. Location: [#LOC].	$259
5150-0099	LED marker light cab and body package. E-ONE custom cab and SS body vehicles.	$1,292
5150-0101	Whelen M9 series LED taillights. Includes LED stop/tail, arrow turn and backup lights with weatherproof connectors.	$3,355
5150-0102	Whelen M6 series LED vertical mount tail lights. Includes LED stop/tail, arrow turn and back-up lights with vertical 3 light housing and weatherproof connectors.	$1,468
5150-0120	Whelen 600 LED auxiliary arrow turn signal (PR) with 15 degree castings. Location: [#LOC].	$649
5150-0122	Marker lights addtional red LED Trucklite Model 15 (PR). Location: [#LOC].	$100
5150-0123	Marker lights addtional amber LED Trucklite Model 15 (PR). Location: [#LOC].	$100
5150-0124	The amber LED marker light on each side front of body just in front of rear wheels shall be upgraded to an amber Trucklite LED clearance/auxiliary turn light IPOS (clearance only no turn).	$176
5150-0127	Whelen M6 series LED vertical mount tail lights. Includes LED stop/tail, arrow turn lights with vertical 3 light housing (PR) with M9LZC Super LED scene lights (PR), with chrome flanges and weatherproof connectors.	$2,507
5150-0129	Whelen M6 series LED horizontal mount tail lights. Includes LED stop/tail, arrow turn and back-up lights individually mounted with weatherproof connectors.	$1,468
5150-0130	License plate light LED with chrome housing located at the rear of the body driver side down low.	$131
5150-0133	License plate light LED with chrome housing located at the rear of the body below B1 entry door.	$131
5150-0134	License plate light incandescent with chrome housing located at the rear of the body.	$131
5150-0147	Whelen 600 series LED vertical mount tail lights. Includes LED stop/tail, arrow turn and halogen back-up lights with individual chrome flanges and weatherproof connectors.	$1,972
5150-0148	Bracket license plate at rear of body. Fabricated from .125" smooth plate aluminum painted job color.	$47
5150-0149	License plate light incandescent with chrome housing located at the rear of the body below tailboard.	$54
5150-0150	Weldon LED vertical mount tail lights. Includes LED stop, tail,l turn and halogen back-up lights with vertical 4 housing and weatherproof connectors.	$1,851
5150-0152	Federal Signal QuadraFlare LED vertical mount tail lights. Includes LED stop/tail, arrow turn and back-up lights with individual chrome bezels and weatherproof connectors.	$1,045
5150-0154	License plate light EON LED located at the rear of the body.	$110
5150-0155	Whelen 600 series LED vertical mount taillights. Includes LED stop/tail, arrow turn and backup lights with individual black flanges and weatherproof connectors.	$2,203
5150-0156	Marker lights Britax model L428 LED amber/red rubber housed (PR). Location: [#LOC].	$392
5150-0158	Whelen M6 series LED vertical mount tail lights with clear lenses. Includes LED stop/tail, arrow turn and back-up lights with vertical 4 light housing and weatherproof connectors.	$1,599
5200-0000	Breaker box 8 place single phase. Includes main breaker. Note: Main breaker occupies 2 places leaving 6 available. Locate [#LOC].	$827
5200-0001	Breaker box 12 place single phase. Includes main breaker. Note: If gen is 6KW or less, main will occupy 2 places leaving 10 available. Locate [#LOC].	$864
5200-0002	Breaker Box 20 Place Single Phase. Includes main breaker. Locate [#LOC].	$880
5200-0003	Breaker box 2 place single phase (70A 110/220V). Location [#LOC].	$368
5200-0008	Breaker box 16 place single phase. Includes main breaker. Locate [#LOC].	$868
5200-0009	Breaker box 8 place single phase; no main breaker. For use with multiple options wired through shoreline power with 30A or larger inlet recept. Locate adjacent to main breaker box.	$644

5250-0003	Generator Onan 6KW diesel. Requires fuel pick up option in chassis and 3rd party testing. Generator location: [#LOC].	$14,807
5250-0005	Generator Onan 6KW hydraulic. Includes generator control / PTO engage switch and a gauge panel located adjacent to breaker box. Generator location: [#LOC].	$12,665
5250-0006	Generator Onan 8KW hydraulic. Includes generator control/PTO engage switch and a gauge panel located adjacent to circuit breaker box. Generator location: [#LOC].	$14,254
5250-0007	Generator Onan 10KW hydraulic. Includes generator control / PTO engage switch and a gauge panel located adjacent to breaker box. Generator location: [#LOC].	$14,801
5250-0008	Generator Harrison 15KW MPC hydraulic. Includes generator control / PTO engage switch and a gauge panel located adjacent to breaker box. Generator location: [#LOC].	$24,537
5250-0009	Generator Harrison 20KW MPC hydraulic. Includes generator control / PTO engage switch and a gauge panel located adjacent to breaker box. Generator location: [#LOC].	$26,510
5250-0012	Generator Onan 15KW hydraulic. Includes generator control/PTO engage switch and a gauge panel located adjacent to circuit breaker box. Generator location: [#LOC].	$21,377
5250-0013	Generator Onan 20KW hydraulic. Includes generator control / PTO engage switch and a gauge panel located adjacent to breaker box. N/A on units with a water pump due to frequency fluctuations. Generator location: [#LOC].	$35,049
5250-0017	Generator Honda EM5000SXK with 4.5KW continuous output. Generator location: [#LOC].	$5,995
5250-0026	Generator Smart Power 10KW hydraulic model ER110. Includes generator control / PTO engage switch and a gauge panel located adjacent to breaker box. Generator location: [#LOC].	$16,884
5250-0036	Generator Smart Power 6KW hydraulic model HR-6 (with top mount cooler). Includes generator control / PTO engage switch and a gauge panel located adjacent to breaker box. Generator location: [#LOC].	$13,447
5250-0037	Generator Smart Power 8KW hydraulic model HR-8 (with top mount cooler). Includes generator control/PTO engagement switch and a gauge panel located adjacent to the circuit breaker box. Generator location: [#LOC].	$15,366
5250-0038	Generator Smart Power 10KW hydraulic model HR-110 (with top mount cooler). Includes generator control / PTO engage switch and a gauge panel located adjacent to breaker box. Generator location: [#LOC].	$16,884
5250-0039	Generator Harrison 10KW MCR hydraulic. Includes generator control / PTO engage switch and a gauge panel located adjacent to breaker box. Generator location: [#LOC].	$15,976
5250-0040	Generator Harrison 6KW MCR hydraulic. Includes generator control / PTO engage switch and a gauge panel located adjacent to breaker box. Generator location: [#LOC].	$12,443
5250-0042	Generator Westerbeke 5KW diesel (model#5.0 BCDB). Requires fuel pick up option in chassis and 3rd party testing. Generator location: [#LOC].	$15,312
5250-0043	Dealer installed generator. Option includes space only. Dealer responsible for NFPA required 3rd party generator testing.	$292
5250-0047	Generator Smart Power 15KW hydraulic model HR-15 (with top mount cooler). Includes generator control / PTO engage switch and a gauge panel located adjacent to breaker box. Generator location: [#LOC].	$22,460
5250-0050	Generator Smart Power 20KW hydraulic model HR-20 (with top mount cooler). Includes generator control / PTO engage switch and a gauge panel located adjacent to breaker box. Generator location: [#LOC].	$24,693
5250-0051	Locate generator gauge panel on pump operators panel ipo next to breaker box.	$118
5250-0055	Generator Smart Power 8KW hydraulic model ER8. Includes generator control / PTO engage switch and a gauge panel located adjacent to breaker box. Generator location: [#LOC]	$18,195
5250-0060	Dealer installed Onan 6KW diesel generator located [#LOC]. Option includes space only. Dealer responsible for NFPA required 3rd party generator testing.	$292
5250-0061	Dealer installed Onan 6KW hydraulic generator located [#LOC]. Option includes space only. Dealer responsible for NFPA required 3rd party generator testing.	$292
5250-0062	Dealer installed Onan 8KW hydraulic generator located [#LOC]. Option includes space only. Dealer responsible for NFPA required 3rd party generator testing.	$292
5250-0063	Dealer installed Onan 10KW hydraulic generator located [#LOC]. Option includes space only. Dealer responsible for NFPA required 3rd party generator testing.	$292
5250-0064	Dealer installed Onan 15KW hydraulic generator located [#LOC]. Option includes space only. Dealer responsible for NFPA required 3rd party generator testing.	$292
5250-0065	Dealer installed Onan 20KW hydraulic generator located [#LOC]. Option includes space only. Dealer responsible for NFPA required 3rd party generator testing.	$292
5250-0066	Dealer installed Smart Power 10KW hydraulic model ER110 generator located [#LOC]. Option includes space only. Dealer responsible for NFPA required 3rd party generator testing.	$292
5250-0067	Dealer installed Smart Power 10KW hydraulic model HR110 generator located [#LOC]. Option includes space only. Dealer responsible for NFPA required 3rd party generator testing.	$292
5250-0068	Dealer installed Smart Power 6KW hydraulic model HR-6 (with top mount cooler) generator located [#LOC]. Option includes space only. Dealer responsible for NFPA required 3rd party generator testing.	$292
5250-0069	Dealer installed Smart Power 8KW hydraulic model HR-8 (with top mount cooler) generator located [#LOC]. Option includes space only. Dealer responsible for NFPA required 3rd party generator testing.	$292
5250-0070	Dealer installed Smart Power 15KW hydraulic model HR-15 (with top mount cooler) generator located [#LOC]. Option includes space only. Dealer responsible for NFPA required 3rd party generator testing.	$292
5250-0071	Dealer installed Smart Power 20KW hydraulic model HR-20 (with top mount cooler) generator located [#LOC]. Option includes space only. Dealer responsible for NFPA required 3rd party generator testing.	$292

5250-0072	Dealer installed Harrison 6KW MCR hydraulic generator located [#LOC]. Option includes space only. Dealer responsible for NFPA required 3rd party generator testing.	$292
5250-0073	Dealer installed Harrison 10KW MCR hydraulic generator located [#LOC]. Option includes space only. Dealer responsible for NFPA required 3rd party generator testing.	$292
5250-0074	Dealer installed Harrison 30KW MPC hydraulic generator located [#LOC]. Option includes space only. Dealer responsible for NFPA required 3rd party generator testing.	$292
5250-0075	Guarded generator PTO engage toggle switch. Located driver side cab switch panel. For use on Typhoon X and CIIX cabs only.	$191
5250-0076	Guarded PTO engage rocker switch. Located driver side cab switch panel. For use on Quest, CIIX LTH aerial and commercial cabs.	$191
5250-0077	Generator Harrison 8KW MCR hydraulic. Includes generator control / PTO engage switch and a gauge panel located adjacent to breaker box. Generator location: [#LOC].	$15,802
5250-0078	Generator Smart Power 10KW hydraulic Liberator model Li15 (with top mount cooler and XRT hyd tool pump). Includes generator control / PTO engage switch and a gauge panel located adjacent to breaker box. Generator location: [#LOC].	$26,096
5250-0080	Dealer installed 5KW gas generator located [#LOC]. Option includes space only. Dealer responsible for NFPA required 3rd party generator testing.	$292
5250-0092	Generator Honda EM5000SXK with 4.5KW continuous output. NFPA rated at 3.3KW. Generator location: [#LOC].	$5,431
5250-0094	Harrison gas powered 5.5KW generator. Includes alternator duct and attached fuel tank. Locate in compartment [#LOC].	$4,122
5250-0106	Westerbeke 10KW BTDAR diesel single phase generator and XRT Hydraulic tool system with 3 tool capability. 10,500 PSI system. Includes selector valve for each reel, hyd res / filter and remote cooler. Requires fuel pick up option in chassis and 3rd party testing. Locate in dunnage pan offset to officer side. Route (4) lead lines to B1 compt.	$45,368
5250-0111	Westerbeke 10KW BTDAR diesel single phase generator and XRT Hydraulic tool system with 2 tool capability. 10,500 PSI system. Includes selector valve for each reel, hyd res / filter. Requires fuel pick up option in chassis and 3rd party testing. Locate in [#LOC]. Route (4) lead lines to B1 compt.	$45,368
5250-0115	Generator Harrison 15KW MPC hydraulic w/IHT. Includes tool circuit manifold, aux heat exchanger, generator control / PTO engage switch and a gauge panel located adjacent to breaker box. [#LOC]	$32,933
5250-0116	Dealer installed Powertech 8KW diesel generator located [#LOC]. Option includes space only. Dealer responsible for NFPA required 3rd party generator testing.	$292
5250-0118	Generator Harrison 8KW LPG hydraulic. Includes generator control switch to engage the PTO and start the generator and a gauge panel located adjacent to breaker box. Generator location: [#LOC].	$15,506
5250-0119	Generator Harrison 8KW MCR hydraulic w/IHT. Includes tool system manifold, aux heat exchanger, generator control / PTO switch, tool sytem / PTO switch, (both switches accessible by driver) and a generator gauge panel located adjacent to breaker box. Generator location: [#LOC].	$26,267
5250-0123	Generator Honda EM4000 with 3.5KW continuous output. NFPA rated at 3.3KW. Generator location: [#LOC].	$5,431
5250-0124	Generator Smart Power 6KW hydraulic model LR-6 Light Rescue Series (FORD 250, 350, 450, 550 Chassis). Includes generator control / PTO engage switch and a gauge panel located adjacent to breaker box. Generator location:[#LOC].	$14,226
5250-0125	Generator Harrison 10KW LPG hydraulic. Includes generator control/PTO engage switch and a gauge panel located adjacent to breaker box. Generator location: [#LOC].	$15,976
5250-0128	Generator Smart Power 15KW hydraulic Liberator model Li20 (with top mount cooler and XRT hyd tool pump). Includes generator control switch and a gauge panel located adjacent to breaker box. Generator location: [#LOC].	$30,457
5250-0130	Generator Harrison 6KW MDS hydraulic w/IHT for continuous accessory. Includes aux hyd system manifold, integral aux heat exchanger, generator control / PTO switch, aux system / PTO switch, (both switches accessible by driver) and a generator gauge panel located adjacent to breaker box. Generator location: [#LOC].	$24,809
5250-0132	Generator Harrison 8KW MDS hydraulic w/IHT for continuous accessory. Includes aux hyd system manifold, integral aux heat exchanger, generator control / PTO switch, aux system / PTO switch (both switches accessible by driver), and a generator gauge panel located adjacent to breaker box. Generator location: [#LOC].	$26,689
5250-0133	Generator Harrison 10KW MDS hydraulic w/IHT for continuous accessory. Includes aux hyd system manifold, integral aux heat exchanger, generator control / PTO switch, aux system / PTO switch (both switches accessible by driver), and a generator gauge panel located adjacent to breaker box. Generator location: [#LOC].	$27,742
5250-0134	Generator Harrison 6KW LPG hydraulic with remote mounted reservoir. Includes generator control / PTO engage switch and a gauge panel located adjacent to breaker box. Generator location: [#LOC].	$16,323
5250-0135	Generator Harrison 10KW MCR hydraulic w/IHT for continuous accessory. Includes aux hyd system manifold, aux heat exchanger, generator control / PTO switch, aux system / PTO switch, (both switches accessible by driver) and a generator gauge panel located adjacent to breaker box. Generator location: [#LOC].	$25,099
5250-0137	Generator Harrison 10KW LPG hydraulic with remote reservoir. Includes generator control/PTO engage switch and a gauge panel located adjacent to breaker box. Generator location: [#LOC].	$15,976
5250-0138	Generator Smart Power 20KW hydraulic Liberator model Li25 (with top mount cooler and XRT hyd tool pump). Includes generator control switch, guarded PTO switch and a gauge panel located adjacent to breaker box. Generator location: [#LOC].	$37,164

5250-0141	Generator Smart Power 6KW hydraulic model ER6. Includes generator control / PTO engage switch and a gauge panel located adjacent to breaker box. Generator location: [#LOC].	$13,447
5250-0142	Generator Harrison 6KW LPG hydraulic. Includes generator control / PTO engage switch and a gauge panel located adjacent to breaker box. Generator location: [#LOC].	$16,323
5250-0143	Generator Onan 8KW hydraulic 50 Hz. Includes generator control/PTO engage switch and a gauge panel located adjacent to circuit breaker box. Generator location: [#LOC].	$14,801
5255-0000	3rd party generator testing without pump.	$663
5255-0001	3rd party generator test with pump.	$88
5260-0000	Generator air deflector for Onan hydraulic. When generator is compartment mounted or mounted in a pan on an aerial body, engineering is to specify updraft or downdraft.	$432
5260-0001	Remote start for diesel generator. Location: [#LOC].	$407
5260-0002	Remote control starting kit for Honda EM3800SX, EM4000, EM5000SX and EM6500SX generators. Locate [#LOC].	$704
5260-0004	Generator prewire for dealer supplied and installed 5 KW portable generator. Includes 12 volt wiring and cable between breaker box. Prewire to [#LOC].	$264
5260-0006	Compartment door(s) of compartment mounted generator to have interlock.	$198
5260-0008	Generator prewire for dealer supplied and installed 6.5KW portable generator. Includes 12volt wiring and cable between breaker box. Prewire to [#LOC].	$324
5260-0014	Oil drain valve with tube extending below officer side pump panel.	$206
5260-0017	Compartment door(s) of compartment mounted compressor to have interlock.	$198
5260-0018	Diamond plate generator shield (3) sided. Forward, rearward and outboard sides w/2" space between generator and shield. Outboard side to have slots for hot air exhaust.	$635
5260-0020	Compartment door(s) of compartment mounted electric dump valve to have interlock.	$198
5260-0021	Oil drain valve with tube extending below driver side pump panel.	$206
5260-0024	Locate generator gauge panel on the pump operators panel in lieu of standard location adjacent to breaker box.	$118
5260-0025	Generator prewire for dealer supplied and installed 3.5 KW portable generator (Honda or other with equivalent dimensions). Includes 12 volt wiring and A/C cabling to breaker box. Prewire to [#LOC].	$264
5260-0033	Diamond plate guard to protect the generator's wiring and harnesses in the dunnage pan. The guard will go full height of the dunnage pan, forward to rear, separating the generator and breaker box from the other side (driver's side) of the dunnage pan.	$328
5260-0034	Vertical exhaust for Harrison MCR and MPC generators 6KW - 20KW.	$500
5260-0037	Generated auxiliary 12V power system wired through diesel generator. System includes (3) Power Max 100A 12V converters to power VMUX electrical system. Generator not included (engine off but ignition must be in "on" posiion). Requires Engineering review for generator and 12V power requirements.	$6,272
5260-0046	Generator prewire for dealer supplied and installed 2KW portable generator. Includes 12 volt wiring and cable between breaker box. Prewire to [#LOC].	$292
5260-0047	Aesthetic shield for hydraulic generator on outboard end of dunnage pan. To be 3-sided, open top, and constructed from diamond plate.	$432
5300-0000	Light bar Code 3 model XL5100 (PR) 22" Long. All red lens. Location: [#LOC]	$1,203
5300-0003	Light bar Code 3 model 556A3 56" long with all red lenses. Location: Centered on the front cab roof	$1,655
5300-0004	Light bar Code 3 model 718A1 (PR) 18" Long. Red Upper / Clear Lower lens. Location: [#LOC].	$1,357
5300-0015	Light bars Federal Signal ADX2201 LED (PR) with red lenses. Location: [#LOC].	$2,998
5300-0017	Light bar Federal Signal Jet Stream 48" LED with R/W/R lenses, red diodes and single traffic clearing light. Location: Centered on the front cab roof	$2,459
5300-0020	Light bar Federal Signal JetStream JLX54HH-00011 54" LED. Red Solaris reflectors with red domes each side and (2) center clear TCL lights. Location: Centered on the front cab roof.	$2,735
5300-0021	Light bar Federal Signal JetSolaris 60" LED. Red Solaris reflectors with clear domes. NFPA compliant. Does not require 2 addl side facing bars. Location: Centered on the front cab roof.	$2,600
5300-0023	Light bars Federal Signal 22I (PR). Location: [#LOC].	$1,086
5300-0024	Light bar Federal Signal Aerodynic 25RQL-Fast 52" with red/clear lens. Location: Centered on the front cab roof.	$1,508
5300-0026	Light bar Federal Signal Aerodynic ADL5202 52" with red/clear/red lens. Location: Centered on the front cab roof.	$1,425
5300-0028	Light bar Federal Signal Aerodynic ADX5271 52" with 10 red Solaris LED reflectors. Location: Centered on the front cab roof	$2,888
5300-0029	Light bar Federal Signal AeroDynic ADX7201 72" with 8 red Solaris LED reflectors. Location: Centered on the front cab roof.	$3,025
5300-0030	Light bar Federal Signal Aerodynic AH1LC 72" with red/clear lens. Location: Centered on the front cab roof.	$1,817
5300-0031	Light bar Federal Signal Aerodynic AH2LC 72" with red/clear lens. Location: Centered on the front cab roof	$1,890
5300-0044	Light bar Federal Signal Vector VC6001. Location: Centered on the front cab roof	$2,132
5300-0047	Light bar Whelen model 9M380NQ66 w/MKEZ7 mounts. Location: Centered on the front cab roof.	$2,747
5300-0048	Light bar Whelen Centurion model C300700N 72". Location: Centered on the front cab roof	$1,678
5300-0049	Light bar Whelen Edge model 9M380NV 66" with MKEZ7 mounts. Location: Centered on the front cab roof	$3,143
5300-0050	Light bar Whelen Edge model 9M387NQ 72" with MKEZ7 mounts without rear facing strobes. N/A on INTL Chassis. Location: Centered on the front cab roof	$2,890
5300-0051	Light bar Whelen model 9M387NV 72" all strobe with MKEZ7 mounts. N/A with Vista roof with front facing windows. N/A on INTL Chassis. Location: Centered on the front cab roof	$2,890
5300-0052	Light bar Whelen Edge model 9MINNFPA 28 1/4" with MK9 mounts. All strobe light bar. Location: [#LOC]	$2,928

5300-0053	Light bar Whelen Freedom model FN66QLED 66" with MKEZ7 mounts. All LED light bar without rear facing LEDs. Location: Centered on the front cab roof.	$3,723
5300-0055	Light bar Whelen Freedom model FN72QLED 72" LED with MKEZ7 mounts and clear lenses. Location: Centered on the front cab roof.	$3,818
5300-0056	Light bar Whelen Freedom model FN72VLED 72" LED with MKEZ7 mounts. N/A INTL Chassis or Vista roofs with front facing windows. Location: Centered on the front cab roof.	$3,818
5300-0059	Light bar Whelen model 9MINNFPA 28 1/4" strobe with MKEZ7 mounts (PR). Location: [#LOC]	$2,928
5300-0060	Light bar Code 3 model 574NFPA1 74" with all red lenses. Location: Centered on the front cab roof.	$1,915
5300-0065	Light bar Federal Signal ADX2202 LED (PR) with red lenses. Located side facing only. Not NFPA compliant forward facing. Location: [#LOC].	$1,859
5300-0070	Light bar Federal Signal JetStream JLX5401 LED 54". Red Solaris reflectors with red domes. Location: Centered on the front cab roof	$2,226
5300-0074	Whelen Mini-Freedom LED light bars (PR) model FNMINI 24" with red/clear lenses and low profile MK9 mounts. Location: [#LOC].	$4,318
5300-0076	Whelen Mini-Freedom LED side facing light bars (PR) model FT8RRRRF 24" with low profile MK9 mounts. Location: [#LOC]. Lense colors: Clear.	$4,137
5300-0082	Whelen Mini-Freedom LED side facing light bars (PR) model FT8RRRRF 24" with MKEZ7 mounts. Location: [#LOC]. Lens color: Clear.	$4,137
5300-0084	Whelen Mini-Freedom LED light bars (PR) model FNMINI 24" with red/clear lenses and MKEZ7 mounts. Location: [#LOC].	$4,318
5300-0086	Light bar Code 3 MX model 758A1. Upper deck contains (4) rotators (2 ea side) with red lenses and (2) clear oscilasers. Lower deck contains (2) frt red halogen flashers outboard, intersection sweeps and clear lenses. Loc: Centered on the frt cab roof.	$1,847
5300-0087	Light bar Code 3 model XL5100 22" Long. All red lens. Location: Centered on the front cab roof.	$604
5300-0088	Light bar Whelen Freedom model FN55VLED 55" LED with MKEZ7 mounts. N/A with Vista roofs with front facing windows. Location: Centered on the front cab roof.	$3,373
5300-0089	Light bar Code 3 MX model 769A1. Upper deck contains 9 rotators w/ red lenses. Lower deck contains intersection sweeps w/clear lenses. Location: Centered on the front cab roof.	$1,913
5300-0091	Light bar Code 3 Excalibur model X58A. Upper deck contains (4) rotators (two ea side) with red lenses and (2) white oscilasers with clear lenses. Lower deck contains (4) takedown lights and two alley lights. Location: Centered on the front cab roof.	$2,098
5300-0092	Light bar Whelen Freedom model FN55QLED 55" LED with takedown lights and MKEZ7 mounts. Location: Centered on the front cab roof.	$3,655
5300-0093	Light bar Whelen Freedom model FN72VLED 72" LED with Opticom and MKEZ7 mounts. N/A INTL Chassis or Vista roofs with front facing windows. Location: Centered on the front cab roof.	$6,390
5300-0094	Light bar Federal Signal 22I (ADL2201Y) with 175 FPM rotators (PR). Location: [#LOC]	$1,086
5300-0095	Light bar Code 3 MX model 769 with R/C/C/C/B lenses. Upper deck contains 9 rotators. Lower deck contains intersection sweeps w/clear lenses. Location: Centered on the front cab roof.	$1,913
5300-0096	Light bar Code 3 Javelin LED model JX67A. Location: Centered on the front cab roof.	$6,421
5300-0099	Light bar Federal Signal JLX21 LED (PR). Located side facing only. Location: [#LOC].	$1,823
5300-0100	Light bar Whelen Freedom model FN72QLED 72" LED with clear lenses and MKEZ7 mounts. Includes (8) red LED and (2) white LED. N/A INTL Chassis. Location: Centered on the front cab roof.	$4,244
5300-0101	Light bar Federal Signal Aerodynic ADL5202 52" with blue lenses. Location: Centered on the front cab roof.	$1,425
5300-0102	Whelen Mini-Freedom LED side facing light bars (PR) model FT8RCRCF 24" with MKEZ7 mounts. Location: [#LOC]. Lense colors: Clear.	$4,105
5300-0103	Light bar Whelen Freedom model FN66QLED 66" LED with 795H Opticom, takedown lights and MKEZ7 mounts. Location: Centered on the front cab roof.	$5,269
5300-0105	Light bar Code 3 model 718A1 (PR) 18" Long. Red upper/clear lower lens driver side and blue upper/clear lower officer side. Location: [#LOC]	$1,174
5300-0106	Light bar Code 3 MX model 769 with B/B/C/R/R upper lenses clear lower lenses. Upper deck contains (8) rotators; (4) each side and alley lights. Lower deck contains intersection sweeps, (4) LED warning; (2) blue driver and (2) red officer. Includes pre-wire for opticom in the center of the upper deck. Location: Centered on the front cab roof. Requires 5300-0105.	$3,433
5300-0110	Light bar Whelen Freedom model FN72QLED 72" LED with MK8H high mounts. Includes (12) red LED and (2) white LED. N/A INTL Chassis. Location: Centered on the front cab roof.	$5,361
5300-0111	Whelen Mini-Freedom LED side facing light bars (PR) model FT8RRRRF 24" with MK8H high mounts. Location: [#LOC]. Lens colors: Clear.	$4,330
5300-0113	Light bar Whelen Freedom model FL2RRRRF 72" LED with MKEZ7 mounts. Includes (10) red LEDs and (4) blue LEDs. N/A INTL Chassis. Location: Centered on the front cab roof.	$5,094
5300-0117	Light bar Code 3 model 729A (PR) 29" long. Red upper / clear lower lens. Location: [#LOC]	$3,439
5300-0118	Light bar Code 3 MX model 769A with R/W/W/W/R upper lenses and clear lower lenses. Upper deck contains (6) rotators and 3-M Opticom. Lower deck contains intersection sweeps, (6) red LED warning and (4) white LED warning. Location: Centered on the front cab roof.	$7,121
5300-0126	Light bar Whelen Freedom model FN72VLED 72" LED with 795H Opticom, (12) red LEDs, (2) clear LEDs and MKEZ7 mounts. N/A INTL Chassis or Vista roofs with front facing windows. Location: Centered on the front cab roof.	$7,819
5300-0128	Federal ADX7250 LED Light bar 72". Includes (12) Solaris 6-LED red reflectors, (4) Solaris 9-LED red reflectors, and (12) Solaris 6-LED white reflectors. Includes (2) flashers, (1) for red LEDs and (1) for white LEDs.	$4,733
5300-0129	Light bar Federal Signal ADX2205 LED (PR). Location: [#LOC]	$5,162

5300-0130	Light bar Whelen Freedom model FN82VLED 82" LED with 3M Opticom and MKEZ7 mounts. N/A INTL Chassis or Vista roofs with front facing windows. Location: Centered on the front cab roof	$6,103
5300-0131	Light bar Whelen model FFX2068 19" LED. Location: Centered front of cab below windshield	$1,638
5300-0136	Light bar Federal Signal 22I (PR) red/blue lenses. Location: [#LOC]	$1,086
5300-0137	Light bar Whelen Freedom model FN72VLED 72" LED with Opticom and MKEZ7 mounts. Includes (10) red LED and (2) white LED. N/A INTL Chassis. Location: Centered on the front cab roof.	$7,243
5300-0138	Light bar package, Federal Signal Escape LED (5) bar package. Includes: (1) 40" LED front bar w/ Opticom, (2) diagonal 26" LED bars and (2) 28" side LED bars.	$11,354
5300-0140	Light bar Whelen Freedom model FN72QLED 72" LED with MK8 high mounts and clear lenses. Includes (10) red LED and (4) white LED. N/A INTL Chassis. Location: Centered on the front cab roof.	$5,366
5300-0141	Light bar Code 3 model 574A1 74" with all red lenses. Location: Centered on the front cab roof.	$2,161
5300-0142	Light bar Federal Signal JetStream 60" LED. Red/White Solaris reflectors with clear domes. NFPA Compliant, does not require 2 addl side facing bars. Location: Centered on the front cab roof.	$2,754
5300-0144	Light bar Whelen Edge model 9M387NQ 72" with MKEZ7 mounts, pre-wire for Opticom and without rear facing strobes. N/A on INTL Chassis. Location: Centered on the front cab roof	$3,159
5300-0145	Federal ADX7204 LED Lightbar 72". Includes (12) Solaris 9-LED red reflectors and Opticom. Location: Centered on the front cab roof.	$5,734
5300-0146	Light bar Whelen Freedom model FN72QLED 72" LED with MKEZ7 mounts. Includes (6) red LED, (2) blue LED and (2) white LED. N/A INTL Chassis. Location: Centered on the front cab roof. Lens color: Clear.	$4,244
5300-0148	Light bar Whelen model 9MMEDFFD 28 1/4" strobe with MK9 mounts (PR). Lense colors to be RRCR (front to rear). Location: [#LOC]	$2,682
5300-0151	Light bar Whelen Freedom model FN66VLED 66" with MKEZ7 mounts. All LED light bar. Location: Centered on the front cab roof	$3,723
5300-0152	Light bar Whelen Freedom model FN72QLED 72" LED with Opticom and MKEZ7 mounts. Includes (6) red LED, (4) Blue LED and (2) white LED. N/A INTL Chassis. Location: Centered on the front cab roof.	$7,214
5300-0154	Light bar Federal Signal JetStream 60" LED. Red Solaris reflectors and red domes with clear center and 3M 792 Opticom. NFPA Compliant, does not require 2 addl side facing bars. Location: Centered on the front cab roof	$6,658
5300-0155	Federal ADX5283 LED Lightbar 52" with clear domes. Includes (16) Solaris 6-LED red reflectors, (4) Solaris 6-LED white reflectors, TCL and Opticom. Includes (2) flashers, (1) for red LEDs and (1) for white LEDs.	$6,163
5300-0157	Whelen Mini-Freedom LED light bars (PR) model FNMINI 24" with clear lenses and MKEZ7 mounts. Location: [#LOC].	$4,318
5300-0158	Light bar Whelen Freedom model FN72QLED 72" LED with 3M Opticom, clear lenses and MKEZ7 mounts. N/A INTL Chassis. Location: Centered on the front cab roof.	$6,174
5300-0159	Light bar Federal Signal ADX7202 72" with (6) red, (2) white Solaris LED reflectors and 3M Opticom. Location: Centered on the front cab roof	$5,216
5300-0160	Light bar Federal Signal JetSolaris 60" LED. Red Solaris reflectors with center traffic clearing light. NFPA compliant, does not require 2 addl side facing bars. Location: Centered on the front cab roof.	$2,679
5300-0161	Light bar Whelen Freedom model FN72VLED 72" LED with Opticom and MKEZ7 mounts. Includes (10) red LED, (2) white LED and (2) green LED. N/A INTL Chassis. Location: Centered on the front cab roof.	$8,031
5300-0162	Whelen Mini-Freedom LED side facing light bars (PR) model FT8RARRF driver and FT8RRARF officer 24" with MKEZ7 mounts. Location: [#LOC]. Lense colors: Clear.	$4,137
5300-0163	Light bar Whelen Freedom model FN72VLED 72" LED with offset Opticom and MKEZ7 mounts. N/A INTL Chassis or Vista roofs with front facing windows. Location: Centered on the front cab roof.	$6,390
5300-0164	Light bar package, Federal Signal Escape LED (5) bar package. Includes: (1) 40" LED front bar (RRWRR), (2) diagonal 26" LED bars (RWR) and (2) 28" side LED bars (RRR).	$8,746
5300-0165	Whelen Mini-Freedom LED side facing front cab light bars (PR) model FT8RRRRF 24" with MKEZ7 mounts. All red LEDs with clear lenses. For use on rear mount platforms with supplemental upper level Zone A warning lights. Locate one each side front cab corners side facing.	$4,137
5300-0166	Light bar Whelen Freedom model FN60VLED 60" LED with MKEZ7 mounts. N/A on Vista roofs with front facing windows. Location: Centered on the front cab roof	$4,792
5300-0167	Whelen Mini-Freedom LED side facing light bars (PR) model FT8RRRRF 28.25" with MKEZ7 mounts. Location: [#LOC]. Lense colors: Clear.	$5,223
5300-0168	Whelen Mini-Freedom LED side facing light bars (PR) model FT8RRRRF 24" with MKEZ7 mounts. Location: [#LOC]. Lens colors: Red.	$4,137
5300-0169	Light bar Whelen Freedom model FN72QLED 72" LED with red lenses and MKEZ7 mounts. Includes (8) red LED and (2) white LED. N/A INTL Chassis. Location: Centered on the front cab roof.	$4,244
5300-0171	Light bar Federal Signal Aerodynic ADL5202 52" with driver red and officer blue lenses. Location: Centered on the front cab roof.	$1,425
5300-0172	Whelen Mini-Freedom LED side facing front cab light bars (PR) model FT8RRRRF 24" with MKEZ7 mounts. All red LEDs with red lenses. For use on rear mount platforms with supplemental upper level Zone A warning lights. Locate one each side front cab corners side facing.	$4,137
5300-0173	Light bar Whelen Freedom model FN72VLED 72" LED with MK8 high mounts. Includes (12) red LED, (2) amber LED and (4) white LED. N/A INTL Chassis or Vista roofs with front facing windows. Location: Centered on the front cab roof.	$6,190

5300-0174	Light bar Whelen Freedom model FN82VLED 82" LED with MKEZ7 mounts and red lenses. Includes (1) driver forward facing steady burn to meet California law. N/A INTL Chassis or Vista roofs with front facing windows. Location: Centered on the front cab roof	$4,509
5300-0175	Light bar Whelen Freedom model FN72QLED 72" LED with PE215 pre-emptor and MKEZ7 mounts. Includes (12) red LED and (2) white LED. N/A INTL Chassis. Location: Centered on the front cab roof.	$5,907
5300-0176	Light bar Whelen Freedom model FN72QLED 72" LED with MK8 high mounts. N/A INTL Chassis. Location: Centered on the front cab roof.	$3,818
5300-0179	Light bar Federal Signal JLX21 LED red/blue(PR). Locate blue forward if side facing. Location: [#LOC]	$2,356
5300-0180	Light bar Federal Signal Escape LED model ESC 2202-NFPA (PR). Red / white with clear lenses. Location: [#LOC].	$3,359
5300-0181	Light bar Federal Signal Escape LED model ESC 2202-NFPA (EA). Red / white with clear lenses. Location: Center front of cab. Requires additional forward facing lightbars.	$1,681
5300-0182	Light bar (PR) Federal Signal Escape LED model ESC 2201P-NFPA (driver side) and ESC 2201D-NFPA (officer side). Red / white with clear lenses. Side facing only - not for use at front cab corners. Location: [#LOC].	$3,186
5300-0184	Whelen Mini-Freedom LED side facing light bars (PR) model FT8RCCRF 28.25" with R/C/C/R lenses and MKEZ7 mounts. Location: [#LOC]	$4,105
5300-0185	Light bar Whelen Freedom model FN72QLED 72" LED with clear lenses, MKEZ7 mounts and pre-wire for 3M opticom. Includes (8) red LED and (2) white LED. N/A INTL Chassis. Location: Centered on the front cab roof	$4,320
5300-0186	Light bar Whelen Freedom model FN72QLED 72" LED with pre-wire for 3M Opticom and MKEZ7 mounts. N/A INTL Chassis. Location: Centered on the front cab roof	$4,070
5300-0187	Light bar Whelen Freedom model FN72QLED 72" LED with clear lenses and MKH8 high mounts. Includes (8) red LED and (2) white LED. N/A INTL Chassis. Location: Centered on the front cab roof	$4,285
5300-0188	Light bar Whelen Freedom model FN72VLED 72" LED with Opticom and MK8 high mounts. N/A INTL Chassis or Vista roofs with front facing windows. Location: Centered on the front cab roof.	$6,435
5300-0189	Light bar Federal Signal ADX2201 LED with red lenses. Location: Centered on the front cab roof. Requires additional corner lightbars for NFPA compliance.	$1,501
5300-0190	Light bar Whelen Freedom model FN72QLED 72" LED with Opticom and MK8 high mounts. Includes (6) red LED, (4) Blue LED and (2) white LED. N/A INTL Chassis. Location: Centered on the front cab roof.	$7,256
5300-0192	Light bar Code 3 Model XP9588NFPA1 88" LED. All red with clear lenses. Not available on commercial cabs. Location: Centered on the front cab roof.	$4,728
5300-0193	Code3 model XP9501NFPA1 (PR) red LED with clear domes. Location: [#LOC].	$2,009
5300-0195	Light bar Federal Signal JetStream 60" LED. Red driver/Blue officer Solaris reflectors. Location: Centered on the front cab roof	$2,280
5300-0196	Whelen Mini-Freedom LED light bars (PR) model FNMINI 24" with red lenses and MK8 high mounts. Location: [#LOC].	$4,427
5300-0197	Light bar Whelen Freedom model FN72QLED 72" LED with GTT Opticom, red lenses and MKH8 high mounts. N/A INTL Chassis. Location: Centered on the front cab roof.	$6,224
5300-0198	Light bar Federal Signal ADX2215-SMV LED side facing (PR) with driver blue forward/red rearward and officer red forward/blue rearward facing lenses. Location: [#LOC].	$4,231
5300-0199	Light bar Whelen Freedom model FL2RRRR 72" LED with Opticom and MKEZ7 mounts. Includes (12) red LED. N/A INTL Chassis. Location: Centered on the front cab roof.	$7,217
5300-0202	Light bar Weldon Aero Maxx II 59" LED. NFPA Compliant, does not require 2 addl side facing bars. Location: Centered on the front cab roof	$2,963
5300-0203	Light bar Whelen Freedom model FN72QLED 72" LED with 3M 795H Opticom, (10) red LEDs, (2) clear LEDs and MK8 high mounts. For use with front vista windows. Location: Centered on the front cab roof.	$7,218
5300-0204	Federal ADX7262 LED Lightbar 72" with clear lenses. Includes (12) Solaris 6-LED red reflectors, (8) Solaris 6-LED blue reflectors, (4) Solaris 9-LED red reflectors, and a 3M Opticom. Includes (2) flashers, (1) for red LEDs and (1) for blue LEDs.	$5,767
5300-0205	Whelen Mini-Freedom LED side facing light bars (PR) model FT8CRRCF 28.25" with CRRC lenses and MKEZ7 mounts. Location: [#LOC].	$4,105
5300-0207	Federal ADX7250 LED Lightbar 72". Includes (12) Solaris 6-LED red reflectors, (4) Solaris 9-LED red reflectors, and (10) Solaris 6-LED white reflectors and Opticom. Includes (2) flashers, (1) for red LEDs and (1) for white LEDs.	$7,166
5300-0209	Federal ADX7265 LED Lightbar 72". Includes (10) Solaris 6-LED red reflectors, (10) Solaris 6-LED blue reflectors, (4) Solaris 9-LED red reflectors, and a 3M Opticom. Includes (2) flashers, (1) for red LEDs and (1) for blue LEDs.	$5,767
5300-0210	Whelen Mini-Freedom LED light bars (PR) model FNMINI 24" with red/clear lenses and MK8 high mounts. Location: [#LOC].	$4,427
5300-0211	Light bar Whelen Freedom model FN60QLED 60" LED with MKEZ7 mounts. Includes (8) red, (2) white and (2) amber modules. Location: Centered on the front cab roof	$4,883
5300-0212	Light bar Whelen Freedom model FN72VLED 72" LED with MKEZ7 mounts. Includes (10) red LED and (4) white LED. N/A INTL Chassis. Location: Centered on the front cab roof.	$4,965
5300-0213	Light bar Code 3 MX model 769NFPA1 with Opticom. Upper deck contains 5 rotators w/ red lenses. Lower deck contains 795H Opticom and intersection sweeps w/clear lenses. Location: Centered on the front cab roof.	$3,209
5300-0214	Light bar Whelen Freedom model FN72QLED 72" LED with GTT Opticom, clear lenses and MKH8 high mounts. N/A INTL Chassis. Location: Centered on the front cab roof	$6,224

5300-0215	Light bar Whelen Freedom model FL2RRRRF 72" LED with MK8H high mounts. Includes (10) red LEDs and (4) blue LEDs. N/A INTL Chassis. Location: Centered on the front cab roof.	$5,143
5300-0216	Light bar Whelen Freedom 72" LED with (8) red LEDs, (2) white LEDs, side facing LR11 alley lights, 3M Opticom, clear lenses and MKEZ7 mounts. N/A INTL Chassis. Location: Centered on the front cab roof	$6,494
5300-0217	Light bar Federal Signal AeroDynic ADX7205 72" with 12 red Solaris LED reflectors and 2 traffic clearing lts. Location: Centered on the front cab roof.	$3,497
5300-0219	Light bar Whelen Freedom model FL2RRRR 72" LED with MKEZ7 mounts and clear lenses. Includes (12) red LEDs, (2) clear LEDs and GTT Opticom. N/A INTL Chassis and vista cabs. Location: Centered on the front cab roof.	$6,354
5300-0220	Light bar Whelen Freedom 82" LED with MKEZ7 mounts and clear lenses. Includes (14) red LEDs and (2) LR11Takedown lights . N/A commercial Chassis. Location: Centered on the front cab roof	$5,385
5300-0232	Light bar Code 3 Excalibur model X69A. Upper deck contains (8) OPX-6 red LED modules and (1) LEDX modules in the center. Lower deck contains (10) OPX-6 red LED modules with a center mounted N-3 emitter. Lens color: Clear. Location: Centered on the front cab roof.	$5,641
5300-0233	Light bar Code 3 Excalibur 36". Upper contains (6) OPX-6 red LED modules. Lower contains (6) OPX-6 red LED modules. Lens color clear. Location: [#LOC].	$7,723
5300-0236	Light bar Federal Signal JLX2108-CNFPA LED (PR). Red Solaris reflectors with clear lenses. Location: [#LOC].	$2,167
5300-0244	Whelen Mini-Freedom LED side facing light bars (PR) model FT8RRRRF driver and FT8BBBBF officer 28.25" with MKEZ7 mounts. Location: [#LOC]. Lense colors: Clear.	$4,137
5300-0245	Whelen Mini-Freedom LED light bars (PR) model FT8RCRCF 28.25" with clear lenses and MKEZ7 mounts. Location: [#LOC].	$4,318
5300-0246	Whelen Mini-Freedom LED light bars (PR) model FT8RCRCF 28.25" with clear lenses and MKEZ7 mounts. Location: [#LOC].	$4,318
5300-0247	Light bar Federal Signal ADX2201 LED (PR) red with clear lenses. Location: [#LOC].	$2,998
5300-0251	Light bar Whelen Freedom model FN72QLED 72" LED with clear lenses, Opticom and MKEZ7 mounts. Includes (7) red LED, (3) blue LED and (2) white LED. N/A INTL Chassis. Location: Centered on the front cab roof.	$6,596
5300-0252	Light bar Whelen Freedom model FN72QLED 72" LED red/blue with MKEZ7 mounts and clear lenses. N/A INTL Chassis. Location: Centered on the front cab roof	$3,818
5300-0253	Whelen Mini-Freedom LED side facing light bars (PR) model FT8RRBBF driver and FT8BBRRF officer 28.25" with MKEZ7 mounts. Location: [#LOC]. Lense colors: Clear.	$4,137
5300-0255	Light bar Federal Signal JLX2133-CNFPA LED (PR) with clear lenses. Location: [#LOC].	$2,167
5300-0256	Light bar Whelen Freedom model FN72QLED 72" LED with MKEZ7 mounts. Includes (4) red LED, (4) blue LED and (2) white LED. N/A INTL Chassis. Location: Centered on the front cab roof	$4,244
5300-0257	Light bar Whelen Freedom model FN72QLED 72" LED with MKEZ7 mounts. Includes (1) driver forward facing steady burn to meet California law. N/A INTL Chassis. Location: Centered on the front cab roof.	$3,818
5300-0260	Light bar Whelen Freedom 66" LED with 3M Opticom, red lenses and MKEZ7 mounts. Includes (10) red LED and (2) LR11 dual alley lights. Location: Centered on the front cab roof.	$6,026
5300-0261	Light bar Federal Signal Legend. (2) 24" light bars LED side facing only. Lenses color: clear. Location: [#LOC].	$3,480
5300-0267	Light bar Whelen Justice model JE2NFPA 56" LED with clear lenses and MKEZ7 mounts. N/A on Vista roofs with front facing windows. Includes (4) red corner facing LIN6 LED lights, (6) forward facing CON3 Linear LED lights; (4) red, (2) white. Location: Centered on the front cab roof.	$2,279
5300-0269	Light bar Whelen Freedom model FN60VLED 60" LED with clear lenses and MKEZ7 mounts. Includes (6) red, (2) white, (4) blue modules and GTT Opticom. Location: Centered on the front cab roof.	$5,836
5300-0270	Light bar Whelen model 45B38 38" LED with Opticom. Location: Centered front of cab below windshield	$2,790
5300-0271	Light bar Whelen Freedom model FN72QLED 72" LED red/blue with MK8 high mounts. N/A INTL Chassis. Location: Centered on the front cab roof	$3,868
5300-0277	Light bar Whelen Freedom model FN72VLED 72" LED with MK8 mounts. N/A INTL Chassis or Vista roofs with front facing windows. Location: Centered on the front cab roof.	$3,867
5300-0278	Light bar Whelen 4500 LED red/clear (PR) side facing. Includes: (2) 28" side LED bars. Location: [#LOC].	$4,798
5300-0279	Light bar Whelen 4500 LED red/clear (PR). Includes: (2) 24" LED bars. Location: [#LOC].	$4,583
5300-0280	Whelen Mini-Freedom LED side facing light bars (PR) model FT8RCRRF driver and FT8RRCRF officer 24" with clear lenses, no rear facing lights and MKEZ7 mounts. Location: [#LOC]	$4,318
5300-0283	Light bar Whelen Freedom model FN72QLED 72" LED with MKEZ7 mounts. Includes (4) red LED, (4) blue LED and (2) white LED. N/A INTL Chassis. Location: Centered on the front cab roof	$4,244
5300-0284	Light bar Whelen Freedom model FN82VLED 82" LED with MKEZ7 mounts and clear lenses. Includes (12) red, (4) white LEDs. N/A commercial Chassis. Location: Centered on the front cab roof	$5,706
5300-0285	Whelen Mini-Freedom LED side facing light bars (PR) model FT8RRRRF 24" with MK8H high mounts. Location: [#LOC]. Lense colors: Red.	$4,330
5300-0286	Light bar Whelen Freedom model FN72QLED 72" LED with MK8 high mounts. Includes (14) red LED with red lenses. N/A INTL Chassis. Location: Centered on the front cab roof.	$5,366
5300-0287	Light bar Whelen Freedom model FN82VLED 82" LED with MKEZ7 mounts and clear lenses. Includes (14) red, (4) white LEDs. N/A commercial Chassis. Location: Centered on the front cab roof	$6,036

5300-0288	Light bar Federal Signal JetStream 60" LED. Red/Blue Solaris reflectors with clear domes. NFPA Compliant, does not require 2 addl side facing bars. Location: Centered on the front cab roof	$2,754
5300-0289	Light bar Whelen Freedom model FN72QLED 72" LED with MKEZ7 mounts. Includes (5) red LED, (5) blue LED and (4) white LED. N/A INTL Chassis. Location: Centered on the front cab roof	$5,086
5300-0290	Whelen Mini-Freedom LED light bars (PR) model FT8 28.25" with clear lenses and MKEZ7 mounts. Includes: (4) corner mounted red LED, (2) split red/white forward facing LED flashing in X pattern and (1) end mounted red LED Location: [#LOC].	$5,270
5300-0291	Whelen Mini-Freedom LED light bars (PR) model FT8 28.25" with clear lenses and MK8H high mounts. Includes: (4)corner mounted red LED, (2) split red/white forward facing LED flashing in X pattern and (1) end mounted red LED Location: [#LOC].	$5,318
5300-0292	Light bar Whelen Freedom model FN72QLED 72" LED with MK8 high mounts. Includes (8) red LED, (2) split red/white and (4) white LED. N/A INTL Chassis. Location: Centered on the front cab roof.	$5,620
5300-0294	Light bar Whelen Freedom model FN72QLED 72" LED with MK8H mounts. Centered on the front cab roof.	$3,767
5300-0295	Light bar Whelen Freedom model FN72QLED 72" LED with 3M Opticom, clear lenses and MKH8 mounts. N/A INTL Chassis. Location: Centered on the front cab roof.	$6,174
5300-0296	Light bar Whelen Freedom model FN72QLED 72" LED with MKEZ7 mounts. Includes (12) red LED and (2) white LED. N/A INTL Chassis. Location: Centered on the front cab roof	$5,086
5300-0297	Light bar Whelen Freedom model FN66QLED 66" with MKEZ7 mounts. All LED light bar without rear facing LEDs. Driver side red LED, officer blue LED. Location: Centered on the front cab roof.	$3,723
5300-0298	Light bar Whelen Freedom model FN72QLED 72" LED with MKEZ7 mounts. Location: Centered on the front cab roof.	$3,818
5300-0299	Light bar Whelen 4500 Series 20" LED (model 45B20). Location: Centered front of cab below windshield.	$1,699
5300-0300	Light bar Whelen Freedom model FN72QLED 72" LED with 3M Opticom, clear lenses and MKEZ7 mounts. N/A INTL Chassis. Location: Centered on the front cab roof.	$6,174
5300-0301	Light bar Whelen Freedom model FN72QLED 72" LED with Opticom and MK8 high mounts. Includes (8) red LED and (4) white LED with red/clear lenses. N/A INTL Chassis. Location: Centered on the front cab roof.	$5,992
5300-0302	Light bar Federal Signal Split Vision VSLR8-NFPA1. Two (2) 26.5" 4-pod light bars w/ (3) red and (1) multi-color pods on each bar with red/clear lenses. Location: [#LOC].	$3,950
5300-0303	Light bar Whelen Freedom model FN66QLED 66" with MKEZ7 mounts. Includes (10) red LED with red lenses and (2) white LED with clear lenses. Location: Centered on the front cab roof.	$4,443
5300-0304	Light bar Whelen Freedom model FN72QLED 72" LED with MK8 high mounts. Includes (5) red LED, (5) blue and (4) white LED . N/A INTL Chassis. Location: Centered on the front cab roof.	$5,366
5300-0305	Light bar Whelen Freedom model FN55QLED 55" LED with driver red/officer blue LEDS, takedown lights and MKEZ7 mounts. Location: Centered on the front cab roof.	$3,655
5300-0306	Light bar Federal Signal JetSolaris 60" LED. Red and blue Solaris reflectors with center traffic clearing light. NFPA Compliant, does not require 2 addl side facing bars. Location: Centered on the front body, mounted to the roof with no upper body or mounted on a bracket in front of the body with 13" upper body.	$2,679
5300-0307	Light bar Whelen Freedom model FN72QLED 72" LED with clear lenses, Opticom and MKEZ7 mounts. Includes (10) red LED and (2) white LED. N/A INTL Chassis. Location: Centered on the front cab roof.	$6,596
5300-0309	Whelen Mini-Freedom LED side facing light bars (PR) model FNMINI 24" with red/blue LED and MKEZ7 mounts. Location: [#LOC]. Lens colors: Clear.	$4,137
5300-0310	Light bar Whelen Freedom model FN72VLED 72" LED with Opticom and MK8H high mounts. Includes (10) red LED, (2) white LED and (2) blue LED. N/A INTL Chassis. Location: Centered on the front cab roof.	$6,535
5300-0313	Light bar Federal Signal ADX2205 LED (PR) red/clear. State of Maryland only. Location: [#LOC].	$5,162
5300-0314	Light bar Federal Signal Legend. (2) 24" light bars LED. Lenses color: clear. (1) Model number LGD24Z-00019 and (1) model number LGD24Z-00020. Location: [#LOC].	$2,033
5300-0315	Whelen Mini-Freedom LED side facing light bars (PR) model FT8BRBRF driver and FT8RBRBF officer 28.25" with MKEZ7 mounts. Location: [#LOC]. Lense colors: Clear.	$4,137
5300-0317	Light bar Whelen Freedom model FN55QLED 55" with GTT 795H Opticom and MKEZ7 mounts. All LED light bar without rear facing LEDs. Location:[#LOC].	$4,822
5300-0318	Light bar risers (PR) for the light bars installed on the top of the cab to insure 360 degree visibility. The riser shall raise the as mounted light bar(s) approximately 4" to prevent interference with the brow lighting (if so equipped) and ensure 360 degree visibility is maintained.	$188
5300-0319	Light bar Whelen Freedom model FN60VLED 60" LED with MK8H mounts. N/A on Vista roofs with front facing windows. Location: Centered on the front cab roof	$4,855
5300-0320	Light bar Whelen Freedom model FN72QLED 72Light bar Whelen Freedom model FN72QLED 72" LED with MKEZ7 mounts. Includes (10) red LED, (4) blue. Location: Centered on the front cab roof.	$4,304
5300-0322	Light bar made from (2) PowerArc model M90FK-RC light heads. Each light head houses (12) red LEDs (24 total) with clear lenses and a polished stainless steel flange. Includes oscillating technology. Both light heads when mounted together to make light bar are approximately 20" in length. Location: centered front of cab below windshield.	$1,626
5300-0325	Light bar Whelen Freedom model FN72VLED 72" LED with 795H Opticom, (12) red LEDs, (2) clear LEDs and MK8H mounts. N/A INTL Chassis or Vista roofs with front facing windows. Location: Centered on the front cab roof.	$7,861

5300-0326	Light bar Whelen Freedom model FN72QLED 72" LED with GTT Opticom, clear lenses and MK8H mounts. Includes (3) red LED, (3) blue LED and (2) white LED. N/A INTL Chassis. Location: Centered on the front cab roof.	$6,222
5300-0328	Light bar Whelen Freedom model FN72QLED 72" LED with MK8 high mounts. Includes (8) red LED, (2) blue LED and (4) white LED. N/A INTL Chassis. Location: Centered on the front cab roof.	$5,366
5300-0329	Light bar Whelen Freedom model FN55QLED 55" LED with driver red/officer blue LEDS, takedown lights and MKEZ7 mounts. Location: Centered on the front cab roof.	$3,655
5300-0330	Light bar Whelen Freedom model FN72QLED 72" LED with clear lenses and MKE7 mounts. Includes (10) red LED and (4) white LED. N/A INTL Chassis. Location: Centered on the front cab roof.	$5,366
5300-0331	Light bar Federal Signal JetSolaris 60" LED. Clear/white Solaris reflectors with red domes. NFPA compliant. Does not require 2 addl side facing bars. Location: Centered on the front cab roof.	$2,600
5300-0332	Light bar Whelen Freedom model FN72QLED 72" LED with MKEZ7 mounts. Includes (6) red, (4) blue and (4) white Super LED modules. Lens color to be R/R/B/W/B/R/W/W/R/B/W/B/R/R Location: Centered on the front cab roof.	$5,001
5300-0333	Whelen Mini-Freedom LED side facing light bars (PR) model FT8RBRP 24" with MKEZ7 mounts. Location: [#LOC]. Lens color: Red/Blue.	$4,137
5300-0334	Light bar Whelen Freedom model FN72QLED 72" LED GTT Opticom and clear lenses, MKEZ7 mounts. Includes (8) red LED and (2) white LED. N/A INTL Chassis. Location: Centered on the front cab roof	$5,451
5300-0335	Federal ADX7204 LED lightbar 72". Includes (12) Solaris 9-LED red reflectors with clear lenses and Opticom. Location: Centered on the front cab roof.	$5,734
5300-0336	Federal ADX7204 LED lightbar 72". Includes (12) Solaris 9-LED red reflectors with lens arrangement of R/C/R/C/R/C/C/C/C/R/C/R/C/R and Opticom (with switch accessible to driver). Location: Centered on the front cab roof.	$5,734
5300-0337	Light bar Whelen Freedom model FN72QLED 72" LED with MK8H high mounts. Includes (8) red LED and (6) white LED. N/A INTL Chassis. Location: Centered on the front cab roof.	$5,034
5300-0339	Light bar Federal Signal JetSolaris 72" LED. Red and White Solaris reflectors with clear domes. NFPA compliant. Does not require 2 addl side facing bars. Location: Centered on the front cab roof.	$2,473
5300-0340	Light bar Whelen Freedom model FN72QLED 72" LED GTT Opticom with MKEZ7 mounts. Includes (4) red LED, (4) blue LED and (2) white LED. N/A INTL Chassis. Location: Centered on the front cab roof	$5,451
5300-0343	Light bar Whelen Freedom model FN72QLED 72" LED with clear lenses, MKEZ7 mounts and pre-wire for 3M opticom. Includes (3) red LED, (3) blue LED and (2) white LED. N/A INTL Chassis. Location: Centered on the front cab roof	$3,648
5300-0344	Light bar Whelen Justice model JE0NFPA 62" LED with clear lenses and MKEZ7 mounts. N/A on Vista roofs with front facing windows. Includes (4) red corner facing LIN6 LED lights, (6) forward facing CON3 Linear LED lights; (4) red, (2) white. Location: Centered on the front cab roof.	$2,394
5300-0346	Whelen Mini-Freedom LED light bars (PR) model FNMINI 24" with clear lenses and MKEZ7 mounts. Includes red/clear/blue driver and blue/clear/red officer. Location: [#LOC].	$4,318
5300-0349	Light bar Whelen Freedom model FN72QLED 72" LED with clear lenses, Opticom and MK8H high mounts. Includes (8) red LED, (2) blue LED, (2) white, (2) LR11 takedown and 795H Opticom. N/A INTL Chassis. Location: Centered on the front cab roof.	$6,489
5300-0350	Whelen Mini-Freedom LED side facing light bars (PR) model FT8RBRRF 28.25" with clear lenses and MK8H mounts. Location: [#LOC].	$4,152
5300-0351	Light bar Whelen Freedom model FN66QLED 66" LED with MK8 high mounts. Includes (13) red LED, (7) blue and (2) white takedown LEDs. Location: centered on the front cab roof.	$6,526
5300-0352	Whelen Mini-Freedom LED light bars (PR) red/blue 24" with clear lenses and MKEZ7 mounts. Location: [#LOC].	$4,318
5300-0354	Light bar Federal Signal Split Vision VSLR6. Two (2) 21" 3-pod light bars w/ (3) red pods on each bar with red lenses. Location: [#LOC].	$3,341
5300-0355	Light bar Federal Signal Split Vision VSLR6. Two (2) 21" 3-pod light bars w/ (2) red pods and (1) multi-color pod on each bar with red/clear lenses. Location: [#LOC].	$3,341
5300-0356	Light bar Federal Signal Split Vision VSLR8-NFPA1. Two (2) 26.5" 4-pod light bars w/(3) red and (1) multi-color pods on each bar with red/clear lenses configured for use w/vista roof that has front windows. Location: [#LOC].	$3,950
5300-0357	Light bar Federal Signal Vision VSLR60S-NFPA1. Includes (7) LED pods; (5) red, (2) multi-color. Location: center cab roof.	$3,734
5300-0358	Light bars Federal Signal Vision VSLR. One (1) center 21" 3 pod and two (2) side 26.5" 4 pod LED light bars. Lenses to be R/R/C/R R/C/R R/C/R/R. Location: "V" centered on the front cab roof. If equipped with front vista windows, rear LED to be shut off.	$5,166
5300-0359	Light bar Federal Signal Split Vision VSLR6. Two (2) 21" 3-pod light bars w/ (3) blue pods on each bar with blue lenses. Location: [#LOC].	$3,341
5300-0360	Light bar Federal Signal Split Vision VSLR6. Two (2) 21" 3-pod light bars w/ (2) red pods and (1) multi-color pod on each bar with R/C/R lenses. Pods 2 and 5 to have rear rotators programmed amber to rear, white side and forward. Location: [#LOC].	$3,655
5300-0361	Light bar Federal Signal Split Vision VSLR6. Two (2) 21" 3-pod light bars w/ (2) blue pods and (1) multi-color pod on each bar with B/C/B lenses. Pods 2 and 5 to have rear rotators programmed amber to rear, white side and forward. Location: [#LOC].	$3,655
5300-0362	Light bars Power Arc model VM2502GLP-1P LED (PR). Colors to be RBR RBR. Includes Golight on each bar. Location: [#LOC].	$4,907
5300-0363	Whelen Mini-Freedom LED side facing light bars (PR) model FT8RCCRF 28.25" with R/C/C/R lenses and MK8H mounts. Location: [#LOC].	$4,152

5300-0364	Light bar Whelen Freedom model FN72QLED 72" LED with red lenses and MKEZ7 mounts. Includes (10) red LED. N/A INTL Chassis. Location: Centered on the front cab roof.	$4,244
5300-0365	Light bars Federal Signal Vision VSLR. One (1) center 21" 3 pod and two (2) side 26.5" 4 pod LED light bars. Lenses to be R/C/R/R C/R/C R/R/C/R. Location: "V" centered on the front cab roof. If equipped with front vista windows, rear LED to be shut off.	$5,166
5300-0366	Light bars Federal Signal Vision VSLR. One (1) center 21" 3 pod and two (2) side 26.5" 4 pod LED light bars. Lenses to be R/R/C/R R/R/R R/C/R/R. Location: "V" centered on the front cab roof. If equipped with front vista windows, rear LED to be shut off.	$5,166
5300-0367	Light bar Whelen Freedom model FN66QLED 66" with MKEZ7 mounts. (10) red and (2) white LED light bar without rear facing LEDs. Location: Centered on the front body, mounted to the roof with no upper body or mounted on a bracket in front of the body with 13" upper body.	$4,516
5300-0368	Light bar Federal Signal JetSolaris 60" LED. Red and blue Solaris reflectors reflectors with center traffic clearing light. NFPA compliant, does not require 2 addl side facing bars. Location: Centered on the front cab roof.	$2,679
5300-0369	Light bar Whelen Freedom model FN72QLED 72" LED with MK8H high mounts and red/clear lenses. Includes (12) red LED and (2) white LED. N/A INTL Chassis. Location: Centered on the front cab roof.	$5,361
5300-0370	Light bar Federal Signal Split Vision VSLR8S-CFD2. Two (2) 26.5" 4-pod light bars w/driver side (3) red and (1) multi-color pods, officer side (2) red, (1) green and (1) multi-color pods with red/green/clear lenses. Location: [#LOC].	$4,070
5300-0371	Light bar Federal Signal Split Vision VSLR8S-CHI. Two (2) 26.5" 4-pod light bars w/driver side (3) red and (1) multi-color pods, officer side (2) red, (1) green and (1) multi-color pods with red and clear lenses. Location: [#LOC].	$4,070
5300-0372	Light bar Whelen Freedom 72" LED with 3M Opticom and MKEZ7 mounts. Includes (12) red LED and clear lenses. N/A INTL Chassis. Location: Centered on the front cab roof.	$6,252
5300-0373	Light bar Code 3 model 2758NFPA1CC LED red with clear lenses. Location: Centered on the front cab roof.	$3,049
5300-0374	Light bar Code 3 LED model 2722NFPA1 (PR) 22" Long. All red with clear lens. Location:[#LOC].	$3,570
5300-0375	Light bar Federal Signal Split Vision VSLR8-NFPA4. Two (2) 26.5" 4-pod light bars w/ (2) red and (2) multi-color pods on each bar with clear lenses. Location: [#LOC].	$4,935
5300-0376	Light bar Federal Signal Split Vision VSLR6-NFPA1. Two (2) 21" 3-pod light bars w/ (2) red and (1) multi-color pods on each bar with clear lenses. Location: [#LOC].	$3,711
5300-0379	Light bar Whelen Freedom model FN72VLED 72" LED with MKEZ7 mounts. Includes (12) red LED and (2) white LED. N/A INTL Chassis. Location: Centered on the front cab roof. Reference 660636.	$4,965
5300-0380	Light bar Federal Signal JetSolaris 60" LED. Blue Solaris reflectors with clear domes. NFPA compliant. Does not require 2 addl side facing bars. Location: Centered on the front cab roof.	$2,600
5300-0381	Light bar Federal Signal ADX2205 LED with clear lenses(PR). Location: [#LOC]	$5,162
5300-0382	Light bar Federal Signal Split Vision VSLR8S-CFD2. Two (2) 26.5" 4-pod light bars w/ (3) red with red domes and (1) multi-color pod with clear dome on driver and (2) red with red domes, (1) multi-color with clear dome and (1) green with clear dome. Location: [#LOC].	$4,321
5300-0383	Light bar Federal Signal JetStream JLX54HH-00011 with all lenses clear 54" LED. Red Solaris reflectors each side and (2) center TCL lights. Location: Centered on the front cab roof.	$2,735
5300-0384	Light bar Code 3 model XL5000 74" with R/R/R/B lenses. Location: Centered on the front cab roof.	$1,915
5300-0385	Light bar Whelen Freedom model FN72QLED 72" LED with MKEZ7 mounts. Includes (8) red LED, (2) white LED and (2) dual LR11 LED take down lights. N/A INTL Chassis. Location: Centered on the front vista cab roof.	$4,698
5300-0386	Light bar Code 3 model 21TR 69". Includes: (4) corner mounted red TRS6 LED modules, (2) side facing red TRS3 LED modules and (7) forward facing red LED modules R/R/W/R/W/R/R w/clear lenses. Location: Centered on the front cab roof.	$2,275
5300-0387	Whelen Mini-Freedom LED light bars (PR) model FT8RRRRF 28.25" with MK8H high mounts. Location: [#LOC]. Lense colors: Clear.	$4,152
5300-0388	Light bar Whelen Freedom model FN72QLED 72" LED with clear lenses and MKEZ7 mounts. Includes (8) red LED and (4) white LED. N/A INTL Chassis. Location: Centered on the front cab roof.	$4,558
5300-0389	Light bar Whelen Freedom model FN66QLED 66" with MK8H high mounts. All LED light bar without rear facing LEDs. Location: Centered on the front cab roof.	$3,768
5300-0390	Light bar Whelen Freedom model FN72QLED 72" LED with MK8 high mounts. Includes (8) red LED, (2) blue LED and (2) white LED. N/A INTL Chassis. Location: Centered on the front cab roof.	$4,352
5300-0391	Light bar Federal Signal Split Vision VSLR8. Two (2) 26.5" 4-pod light bars. Driver w/ (2) red and (2) multi-color pods with clear lenses; officer w/ (3) red and (1) multi-color pods with clear lenses. Location: [#LOC].	$4,935
5300-0393	Light bar Whelen Freedom model FN72VLED 72" LED with MKEZ7 mounts. Includes (10) red LED and (2) white LED. N/A INTL Chassis. Location: Centered on the front cab roof.	$4,428
5300-0395	Whelen Mini-Freedom Rota-Beam LED light bars (PR) 24" with clear lenses and MKEZ7 mounts. Location: [#LOC].	$5,601
5300-0396	Light bar Whelen Freedom 72" LED with MK8 high mounts and clear lenses. Includes (5) red Rota-Beam LED, (4) red LED and (4) white LED. N/A INTL Chassis. Location: Centered on the front cab roof.	$5,892
5300-0397	Light bar Whelen Freedom model FN72QLED 72" LED with MKEZ7 mounts. Includes (10) red LED and (2) white LED. N/A INTL Chassis. Location: Centered on the front cab roof.	$4,613
5300-0398	Light bar package, Whelen 4500 LED (4) bar package. Includes: (2) diagonal 24" LED bars and (2) 28" side LED bars over canopy windows.	$7,907

5300-0399	Light bar Whelen Freedom model FN72QLED 72" LED with GTT Opticom, clear lenses and MKEZ7 mounts. Includes (6) red LED, (2) blue LED and (2) white LED. N/A INTL Chassis. Location: Centered on the front cab roof.	$6,308
5300-0400	Light bar Whelen Freedom model FN72QLED 72" LED with GTT Opticom, red lenses and MKEZ7 mounts. N/A INTL Chassis. Location: Centered on the front cab roof.	$6,174
5300-0401	Light bar Whelen Freedom 72" LED with MKEZ7 mounts and clear lenses. Includes (6) Rota-Beam LED (4-red, 2-white), (2) green LED, (2) red LED, (2) dual LR11 alley lights, (2) LR11 take down lights and GTT 795H Opticom. N/A INTL Chassis. Location: Centered on the front cab roof.	$6,784
5300-0403	Whelen Mini-Freedom Rota-Beam LED light bars (PR) 28.25" with R/C/R lenses, (2) red and (1) white Rota-Beam LED lights and MK8H high mounts. Location: [#LOC].	$5,391
5300-0404	Light bar Whelen Freedom 72" LED with MK8 high mounts and red / clear lenses. Includes (6) red Rota-Beam LED, (1) white Rota-Beam LED and (4) red LED. N/A INTL Chassis. Location: Centered on the front cab roof.	$5,487
5300-0405	Whelen Mini-Freedom LED light bar package with MKEZ7 mounts. (1) model FT8RCCRF centered on front cab roof, (1) FT8RRRRF each side front cab corner at 30 degree angle. Lense colors: Clear.	$5,328
5300-0406	Light bar Whelen Freedom 72" LED with MK8H high mounts and clear lenses. Includes (6) red Rota-Beam LED, (1) white Rota-Beam LED, (2) red LED and (2) white LED. N/A INTL Chassis. Location: Centered on the front cab roof.	$5,718
5300-0407	Light bar Whelen Freedom 60" LED with MK8 high mounts and clear lenses. Includes (6) red Rota-Beam LED, (1) white Rota-Beam LED and (2) white LED. N/A INTL Chassis. Location: Centered on the front cab roof.	$5,252
5300-0409	Light bar Whelen Freedom model FN55QLED 55" LED with MKEZ7 mounts. Location: Centered on the front cab roof.	$3,166
5300-0410	Light bar Federal Signal JetSolaris 60" LED. Red Solaris reflectors with red domes. NFPA compliant. Does not require 2 addl side facing bars. Location: Centered on the front cab roof.	$2,600
5300-0411	Light bar Whelen Freedom model FN82QLED 82" LED with clear lenses, Opticom and MKEZ7 mounts. Includes (12) red LED and (2) white LED. N/A INTL Chassis. Location: Centered on the front cab roof.	$6,255
5300-0412	Light bar Federal Signal Legend 70" LED with red/white diodes and clear lenses. Location: Centered on the front cab roof.	$3,963
5300-0413	Light bar Federal Signal Navigator model NVG73-EONE 73" with (6) red and (2) white Quadraflare LED lights. Location: Centered on the front cab roof.	$3,222
5300-0414	Light bar Federal Signal Legend. (2) 24" light bars LED. Lenses color: clear. (1) Model number LGD24Z-2655171 and (1) model number LGD24Z-2655292. Location: [#LOC].	$2,033
5300-0415	Light bar Federal Signal Navigator model NVG73-NFPA3 73" with (2) red SLR rotators, (2) red / white SLR rotators and (4) red Quadraflare LED lights. Location: Centered on the front cab roof.	$3,594
5300-0416	Whelen Mini-Freedom Rota-Beam LED light bars (PR) 24" with clear lenses and MK8H high mounts. Location: [#LOC].	$5,653
5300-0417	Light bar Whelen Freedom 72" LED with MKEZ7 mounts and clear lenses. Includes (5) red Rota-Beam LED and (2) white Rota-Beam LED. N/A INTL Chassis. Location: Centered on the front cab roof.	$4,737
5300-0418	Whelen Ultra Freedom Micro Edge LED (PR) model MCFLED25 clear lens with red LEDs. Location [#LOC]. When used at front cab corners requires additional lighting to meet NFPA.	$1,899
5300-0419	Whelen Mini-Freedom LED light bars (PR) model FNMINI 24" with clear lenses and low profile MK9 mounts. Location: [#LOC].	$4,318
5300-0420	Whelen Mini-Freedom LED side facing light bars (PR) model FT8RRRRF 24" with low profile MK9 mounts. Location: [#LOC]. Lense colors: Red.	$4,137
5300-0421	Light bar Whelen Freedom 72" LED with MKEZ7 mounts and clear lenses. Includes (8) red Rota-Beam LED and GTT 795H Opticom. N/A INTL Chassis. Location: Centered on the front cab roof.	$6,391
5300-0422	Light bar Whelen Freedom model FN72VLED 72" LED with 795H Opticom and MKEZ7 mounts. Includes (6) red LED, (4) blue LED and (2) white LED. N/A INTL Chassis. Location: Centered on the front cab roof.	$7,243
5300-0423	Light bar Whelen Freedom model FN66VLED 66" with dual LR11 alley lights, dual LR11 takedown lights and MKEZ7 mounts. All LED light bar. Location: Centered on the front cab roof	$4,075
5300-0424	Light bar Whelen Freedom 72" LED with MKEZ7 mounts and red/clear lenses. Includes (8) red Rota-Beam LED and GTT 795H Opticom. N/A INTL Chassis. Location: Centered on the front cab roof.	$6,391
5300-0427	Light bar Whelen Freedom model FN55VLED 55" LED with PE215 emitter, (4) red driver LED, (4) blue officer LED and MKEZ7 mounts and clear lenses. N/A with Vista roofs with front facing windows. Location: Centered on the front cab roof.	$4,050
5300-0428	Light bar Whelen Freedom model FN66QLED 66" with MKEZ7 mounts. Red/blue/clear LED light bar without rear facing LEDs. Location: Centered on the front cab roof.	$3,723
5300-0429	Light bar Whelen Freedom model FN72QLED 72" LED red/blue with MKEZ7 mounts and red/clear/blue lenses. N/A INTL Chassis. Location: Centered on the front cab roof	$3,818
5300-0430	Light bar Power Arc model LED VM6004-3P 60" long. Lenses color: R/R/R/W/R/R/R Location: center front cab roof.	$3,379
5300-0431	Light bar Federal Signal Navigator model NVG25-NFPA3 LED (PR). Includes (3) QL64 red and (2) QL73 red in each bar with clear lenses. Location: [#LOC]	$3,341
5300-0432	Light bar Federal Signal Navigator model NVG25-NFPA4 LED (PR). Includes (3) QL64 red and (2) QL73 red in each bar with red lenses. Location: [#LOC]	$3,341
5300-0433	Light bar Federal Signal Navigator model NVG25-0001 (PR). Includes (2) SLR rotators red/white and (1) QL64 red in each bar with clear lenses. Location: [#LOC]	$3,283

5300-0441	Light bar Whelen Freedom model FN88VLED 88" LED with MKEZ7 mounts and clear lenses. Includes (10) red, (6) white LEDs and (2) dual LR11 alley lights. N/A commercial Chassis. Location: Centered on the front cab roof	$6,134
5300-0442	Light bar Whelen Freedom model FN72VLED 72" LED with 795H Opticom and MKEZ7 mounts. Includes (8) red LED and (4) blue LED. N/A INTL Chassis. Location: Centered on the front cab roof.	$7,243
5300-0443	Light bar Federal Signal Navigator model NVG25-NFPA-D & -P LED (PR). Includes (2) QL64 red, (1) QL64 split red/white and (1) QL73 red in each bar with clear lenses. Location: [#LOC]	$3,341
5300-0444	Light bar Federal Signal Navigator model NVG73-FLNDRS 73" with (2) red SLR rotators, (2) red/white SLR rotators, (2) red/white Quadraflare LED and (2) blue Quadraflare LED lights. Location: Centered on the front cab roof.	$4,090
5300-0445	Federal JLX7250-NFPA LED Light bar 72". Includes (8) red 6-LED reflectors, (3) white 6-LED reflectors, and (6) red 3-LED reflectors. The lenses shall be clear. No rear lighting.	$4,254
5300-0446	Whelen Mini-Freedom LED light bars (4) 24" with clear lenses and MKEZ7 mounts. Includes red/clear/blue driver and blue/clear/red officer. Location: (1) each side front cab corner at 20 degree angle, (1) each side over rear cab doors.	$11,301
5300-0448	Light bar Whelen Freedom model FN72VLED 72" LED with MK8H high mounts. Includes (11) red LED, (2) white LED and (1) green LED. N/A INTL Chassis. Location: Centered on the front cab roof.	$4,801
5300-0449	Light bar Whelen Freedom model FN72QLED 72" LED with 3M Opticom, clear lenses, (4) red LEDs', (2) blue LEDs', (2) clear LEDs' and MKEZ7 mounts. N/A INTL Chassis. Location: Centered on the front cab roof.	$6,174
5300-0450	Light bar Whelen Freedom model FN72VLED 72" LED with Opticom and MKEZ7 mounts. Includes (6) red LED, (6) blue LED and (2) white LED. N/A INTL Chassis. Location: Centered on the front cab roof.	$6,535
5310-0000	Light bar Federal Signal, Signal Master SML6. Location: installed at the rear of the apparatus.	$861
5310-0001	Light bar Federal Signal Signal Master SML8.	$947
5310-0002	Light bar Federal Signal Signal Master SMLED6.	$1,468
5310-0003	Light bar Federal Signal Signal Master SMLED8.	$1,551
5310-0005	Whelen Traffic Advisor Model TA837A - 43.25" long.	$1,071
5310-0011	Light bar CODE 3 model AS10S Arrowstik, 47" long. Mounted center rear body.	$1,239
5310-0012	Diamond plate shield over rear directional light.	$308
5310-0014	Light bar CODE 3 model AS839 Arrowstik, 39" long. Lenses to be amber with red on the ends. Mounted center rear body.	$1,012
5310-0015	Light bar CODE 3 model NASL839 LEDX Narrowstik, 40.5" long. Lights heads are amber with red on the ends. Mounted center rear body.	$1,802
5310-0017	Whelen Traffic Advisor model TAL65 LED - 36" long.	$1,328
5310-0018	Whelen Traffic Advisor Model TAM65 LED - 36" long.	$1,717
5310-0019	Light bar Code 3 model NASL847 LED Narrowstik, 47" long. Mounted on rear of body.	$1,800
5310-0021	Light bar CODE 3 model NASL839 LEDX Narrowstik, 40.5 inches long. Mounted center rear body.	$1,802
5310-0023	Light bar CODE 3 model NASL630 LEDX Narrowstik, 30.5 inches long.	$1,616
5310-0025	Directional light circuit wiring through upper level warning.	$75
5310-0027	Whelen Traffic Advisor Model TAM85 LED - 47" long.	$2,402
5310-0028	Whelen Traffic Advisor Model TAM83 LED - 31" long.	$1,760
5310-0029	Smooth plate shield painted job color over rear directional light.	$532
5310-0031	Whelen Traffic Advisor model TA-4437M LED, split (2) 22.75" long. Locate one each side on rear panel of body.	$2,012
5310-0042	Whelen Traffic Advisor Model TAZ86 LED - 31" long.	$2,210
5310-0043	Whelen Traffic Advisor Model TANF65 LED - 34" long.	$1,690
5310-0044	Light bar Federal Signal Signal Master Viper EXT LED 42" with 8 lights.	$1,758
5310-0045	Light bar Federal Signal Signal Master Viper EXT LED 31" with 6 lights.	$1,552
5310-0046	Whelen Traffic Advisor Model TANF85 LED - 45" long.	$2,087
5310-0053	Whelen Traffic Advisor model TA-4437M LED, split (2) 22.75" long. Locate one each side on rear upper body extrusion above B2 and B3.	$2,012
5310-0054	Light bar Federal Signal Signal Master Plus SMLED-PLS-6.	$1,309
5310-0055	Light bar Federal Signal Master Viper EXT LED 31" with 6 lights with clear lenses.	$1,552
5310-0056	Whelen Traffic Advisor model TAL65 LED - 36" long. Locate surface mounted on driver and officer side of body up high approx. centered.	$1,328
5310-0058	Whelen Traffic Advisor Model TADP8 LED - 30" long. Includes TADCTL1 controller.	$2,098
5310-0059	Whelen Traffic Advisor Model TAD8 LED - 30" long. Includes TACTLD1 controller.	$1,775
5350-0000	Camera backup Intec with monochrome monitor.	$4,437
5350-0001	Camera back-up Safety Vision LCD model SV-CLCD70BA-625B with audio. For use with up to 2 cameras.	$2,002
5350-0004	FireCom intercom jack on the turntable. (N/A with three-way aerial intercom).	$1,074
5350-0005	FireCom intercom jacks. (1) turntable jack and (1) tip jack. (N/A with three-way aerial intercom).	$1,800
5350-0006	FireCom intercom jacks. (1) turntable jack and (2) tip jacks. N/A with two or three-way aerial intercom.	$2,229
5350-0025	Back up camera for Vehicle Information Control Center. Video displays automatically when transmission is in reverse.	$675
5350-0026	Side facing camera mtd up high on officer side of the cab centrally located (above canopy window if applicable) interlocked with right turn signal. Displays video on vehicle information control center.	$675

5350-0027	Side facing camera mtd up high on driver side of the cab centrally located (above canopy window if applicable) interlocked with left turn signal. Displays video on vehicle information control center.	$675
5350-0028	Forward facing camera mounted (approximately) center of cab.	$675
5350-0048	Setcom intercom system with (6) cab jacks and (1) pump panel jack. Custom cabs only. Headsets to be shipped loose.	$8,776
5350-0054	Safety Vision officer's side camera. Requires Safety Vision back-up camera option. SV-620 Kit w/ SV-523. Camera to be located on officer's side mirror.	$876
5350-0060	Diamond plate camera shield.	$206
5350-0061	Safety Vision driver's side camera. Requires Safety Vision back-up camera option. SV-620 Kit w/ SV-523. Camera to be located on driver's side mirror.	$876
5350-0069	FireCom intercom prewire. Includes a PP20 jack at pump operator's panel and aerial turntable. Wiring to be run to officer's side overhead console.	$1,363
5350-0070	Voyager back-up camera. Video displays automatically when transmission is in reverse. Camera only - does not include monitor.	$682
5350-0071	Voyager side mtd rear facing camera positioned up high on officer side of the cab centrally located (above canopy window if applicable) interlocked with right turn signal. Camera only - does not include monitor.	$663
5350-0072	Voyager side mtd rear facing camera positioned up high on driver side of the cab centrally located (above canopy window if applicable) interlocked with left turn signal. Camera only - does not include monitor.	$663
5350-0073	Voyager forward facing camera mounted upper center area of cab.	$623
5350-0074	Sigtronics US-45S intercom system with (4) cab jacks, (1) pump panel jack, four headsets / hooks, PTT switches for driver / ppnl. Does not include radio interface cable. Custom cabs only. Headsets to be shipped loose.	$4,181
5350-0076	David Clark model 3800 intercom system with (5) cab head sets. Headsets to be shipped loose.	$6,863
5350-0078	Smooth plate camera shield painted job color (match the "two tone" sale code color, if two tone applies).	$317
5350-0079	Sigtronics US-45D intercom system with (3) cab jacks, (1) pump panel jack, three headsets / hooks, PTT switches for driver/officer/ppnl. Does not include radio interface cable. Custom cabs only. Headsets to be shipped loose.	$3,947
5350-0080	Camera back-up Safety Vision LCD model SV-CLCD70A-625B with split screen capable monitor and audio. For use with up to 4 cameras.	$2,347
5350-0084	David Clark model 3800 intercom system with (6) cab head sets. Headsets to be shipped loose.	$7,762
5350-0085	Safety Vision officer's side camera SV-622RS w/ SV-512 cable. Requires Safety Vision back-up camera option. Camera to be located up high on officer side of the cab centrally located (above canopy window if applicable) interlocked with right turn signal. Camera only - does not include monitor.	$907
5350-0086	Safety Vision driver's side camera SV-622LS w/ SV-512 cable. Requires Safety Vision back-up camera option. Camera to be located up high on driver side of the cab centrally located (above canopy window if applicable) interlocked with left turn signal. Camera only - does not include monitor.	$907
5350-0110	Camera backup Zone Defense LCD model SYS-323-1-4Q with split screen capable monitor.	$1,933
5350-0111	Camera backup Zone Defense LCD model SYS-323-1-4.	$1,302
5350-0112	Sigtronics US-67S intercom system with (6) cab jacks, six headsets / hooks, PTT switches for driver / officer. Does not include radio interface cable. Custom cabs only. Headsets to be shipped loose.	$5,455
5350-0114	Sigtronics US-67D intercom system with (6) cab jacks, six headsets / hooks, PTT switches for driver / officer. Does not include radio interface cable. Custom cabs only. Headsets to be shipped loose.	$5,561
5350-0116	Federal Signal back-up/DVR camera system. Includes front view, rear view camera, side view cameras, split screen monitor and DVR.	$3,846
5350-0118	Camera backup Federal Signal LCD model CAMSET70-NTSC-4.	$1,172
5350-0123	Sigtronics US-12S intercom system with (7) cab jacks, (1) pump panel jack, seven headsets / hooks, PTT switches for driver / officer / ppnl. Does not include radio interface cable. Custom cabs only. Headsets to be shipped loose.	$6,258
5350-0130	David Clark model 3800 intercom system with (6) cab head sets and (1) pump panel jack. Custom cabs only. Headsets to be shipped loose.	$9,732
5350-0132	David Clark model 3800 intercom system with four (4) cab head sets and one (1) pump panel jack. Radio interfaced to three (3) positions, driver , turret operator and pump panel. Headsets to be shipped loose.	$10,077
5350-0134	Voyager back-up camera wire through multiplex display. Video displays automatically when transmission is in reverse.	$682
5350-0136	Sigtronics US-67D intercom system with (5) cab jacks, (1) pump panel jack, (1) driver rear body jack, five headsets / hooks, PTT switches for driver / officer / ppnl / rear body. Does not include radio interface cable. Custom cabs only. Headsets to be shipped loose.	$5,178
5350-0137	Sigtronics US-45S intercom system with (4) cab jacks, four headsets / hooks, PTT switches for driver / officer. Does not include radio interface cable. Custom cabs only. Headsets to be shipped loose.	$4,070
5350-0140	Safety Vision officer's side camera SV-622RS w/ SV-512 cable. Requires Safety Vision back-up camera option. Camera to be located on officer's side gravel shield offset to the rear.	$876
5350-0141	Safety Vision driver's side camera SV-622LS w/ SV-512 cable. Requires Safety Vision back-up camera option. Camera to be located on driver's side gravel shield offset to the rear.	$876
5350-0142	Safety Vision officer's side camera. Requires Safety Vision back-up camera option. SV-620 Kit w/ SV-523. Camera to be located on officer's side of cab above tank level lights.	$876

5350-0144	Safety Vision officer's side camera. Requires Safety Vision back-up camera option. SV-620 Kit w/ SV-523. Camera to be located on officer's side of cab above scene light.	$876
5350-0156	FRC ACT 2-way aerial intercom.	$1,985
5350-0157	FRC ACT 3-way aerial intercom. Speaker and control module to be located to rear of platform on Bronto units.	$3,024
5350-0158	Camera back-up Safety Vision LCD model SV-CLCD70B-625B with audio. Located in cab dash on bracket (see photos).	$2,002
5350-0169	Camera back-up Safety Vision LCD model SV-CLCD-64-810 with lens shutter that opens when the unit is put in reverse.	$2,071
5350-0173	Safety Vision driver's side camera SV-622LS w/ SV-512 cable. Requires Safety Vision back-up camera option. Camera to be located on driver's side above forward tandem of rear axle.	$876
5350-0174	Safety Vision officer's side camera SV-622RS w/ SV-512 cable. Requires Safety Vision back-up camera option. Camera to be located on officer's side above forward tandem of rear axle.	$876
5350-0175	David Clark model 3800 intercom system with (4) cab head sets. Headsets to be shipped loose.	$5,965
5350-0176	David Clark model 3800 intercom system with (5) cab head sets and (1) pump panel jack. Custom cabs only. Headsets to be shipped loose.	$8,880
5350-0177	FireCom (4) position wireless 5yr extended warranty. Includes 5-day repair time with 2-day shipping.	$1,731
5350-0180	Safety Vision officer's side camera SV-622RS w/ SV-512 cable. Requires Safety Vision back-up camera option. Camera to be located up high on officer side of the cab centrally located (above canopy window if applicable) interlocked with left turn signal. Camera only - does not include monitor.	$907
5350-0181	Camera back-up Safety Vision LCD model SV-CLCD70BA-620A with audio. For use with up to 2 cameras.	$2,149
5350-0182	Safety Vision officer's side camera SV-622RS w/ SV-512 cable. Requires Safety Vision back-up camera option. Camera to be located on front cab corner (approx 31" bottom of camera to bottom of cab) interlocked with right turn signal. Camera only - does not include monitor.	$907
5350-0183	Safety Vision driver's side camera SV-622LS w/ SV-512 cable. Requires Safety Vision back-up camera option. Camera to be located on front cab corner (approx 31" bottom of camera to bottom of cab) interlocked with left turn signal. Camera only - does not include monitor.	$907
5350-0186	Back-up camera speaker. For use with V-MUX electrical system. Located in cab accessible to driver.	$207
5350-0188	Federal Signal (Sony) back-up camera wire through multiplex display. Video displays automatically when transmission is in reverse.	$658
5350-0189	Zone Defense PathFindIR FLIR camera. Located centered below windshield. For use with Safety Zone Defense split screen back-up camera system only. Includes guarded switch on driver side lower dash area.	$6,020
5350-0190	Zone Defense side camera. Requires Zone Defense back-up camera option. Camera to be located on driver's and officer's side mirror.	$462
5350-0191	Video Sentinel camera system. Includes FLIR and color zoom camera at platform (with pan and tilt) and 8.4" color weatherproof monitor. The monitor shall be located in/and or on: [#LOC].	$54,017
5350-0192	Safety Vision back-up camera wired through multiplex display. Video displays automatically when transmission is in reverse. Camera only - does not include monitor.	$876
5350-0193	Voyager rear facing camera positioned on officer's side front cab corner (approx 31" bottom of camera to bottom of cab) interlocked with right turn signal. Camera only - does not include monitor.	$663
5350-0194	Voyager rear facing camera positioned on driver's side front cab corner (approx 31" bottom of camera to bottom of cab) interlocked with left turn signal. Camera only - does not include monitor.	$663
5350-0196	Sigtronics US-67D intercom system with (5) cab jacks, (1) pump panel jack, five headsets / hooks, PTT switches for driver / officer / ppnl. Does not include radio interface cable. Custom cabs only. Headsets to be shipped loose.	$4,875
5350-0197	Safety Vision officer's side camera SV-622RS w/ SV-512 cable. Requires Safety Vision back-up camera option. Camera to be located on front fender interlocked with right turn signal. Camera only - does not include monitor.	$907
5350-0198	Voyager rear facing camera positioned on officer's side front fender interlocked with right turn signal. Camera only - does not include monitor.	$663
5350-0199	FireCom intercom kit to include a digital intercom model 5100D, four (4) plug in modules and headset hooks shall be installed within the cab. Headsets are not included and ordered separately (misc loose equip).	$2,567
5350-0200	FireCom intercom kit to include a digital intercom model 5100D, four (4) plug in modules and headset hooks shall be installed within the cab and one (1) exterior pump panel plug in module. Headsets are not included and ordered separately (misc loose equip).	$2,788
5350-0201	FireCom intercom kit to include a digital intercom model 5100D, six (6) plug in modules and headset hooks shall be installed within the cab. Headsets are not included and ordered separately (misc loose equip).	$2,908
5350-0202	FireCom intercom kit to include a digital intercom model 5100D, six (6) plug in modules and headset hooks shall be installed within the cab and one (1) exterior pump panel plug in module. Headsets are not included and ordered separately (misc loose equip).	$3,167
5350-0203	FireCom intercom kit to include a digital intercom model 5100D, five (5) plug in modules and headset hooks shall be installed within the cab. Headsets are not included and ordered separately (misc loose equip).	$2,757

5350-0204	FireCom intercom kit to include a digital intercom model 5100D, five (5) plug in modules and headset hooks shall be installed within the cab and one (1) exterior pump panel plug in module. Headsets are not included and ordered separately (misc loose equip).	$2,977
5350-0205	FireCom wireless intercom kit to include a digital intercom model 5100D, two (2) base transmit units with radio transmission, one (1) base transmit unit for intercom only (no radios) and four (4) headset hooks shall be installed within the cab. Headsets are not included and ordered separately (misc loose equip).	$3,965
5350-0206	FireCom wireless intercom kit to include a digital intercom model 5100D, two (2) base transmit units with radio transmission, one (1) base transmit unit for intercom only (no radios) and five (5) headset hooks shall be installed within the cab. Headsets are not included and ordered separately (misc loose equip).	$3,998
5350-0207	FireCom wireless intercom kit to include a digital intercom model 5100D, two (2) base transmit units with radio transmission, one (1) base transmit unit for intercom only (no radios) and six (6) headset hooks shall be installed within the cab. Headsets are not included and ordered separately (misc loose equip).	$4,030
5350-0208	FireCom intercom kit to include a dual radio digital intercom model 5200D, four (4) plug in modules and headset hooks shall be installed within the cab. Headsets are not included and ordered separately (misc loose equip).	$3,009
5350-0209	FireCom intercom kit to include a dual radio digital intercom model 5200D, four (4) plug in modules and headset hooks shall be installed within the cab and one (1) exterior pump panel plug in module. Headsets are not included and ordered separately (misc loose equip).	$3,231
5350-0210	FireCom intercom kit to include a dual radio digital intercom model 5200D, six (6) plug in modules and headset hooks shall be installed within the cab. Headsets are not included and ordered separately (misc loose equip).	$3,351
5350-0211	FireCom intercom kit to include a dual radio digital intercom model 5200D, six (6) plug in modules and headset hooks shall be installed within the cab and one (1) exterior pump panel plug in module. Headsets are not included and ordered separately (misc loose equip).	$3,611
5350-0212	FireCom intercom kit to include a dual radio digital intercom model 5200D, five (5) plug in modules and headset hooks shall be installed within the cab. Headsets are not included and ordered separately (misc loose equip).	$3,200
5350-0213	FireCom intercom kit to include a dual radio digital intercom model 5200D, five (5) plug in modules and headset hooks shall be installed within the cab and one (1) exterior pump panel plug in module. Headsets are not included and ordered separately (misc loose equip).	$3,421
5350-0214	FireCom wireless intercom kit to include a dual radio digital intercom model 5200D, two (2) base transmit units with radio transmission, one (1) base transmit unit for intercom only (no radios) and four (4) headset hooks shall be installed within the cab. Headsets are not included and ordered separately (misc loose equip).	$4,378
5350-0215	FireCom wireless intercom kit to include a dual radio digital intercom model 5200D, two (2) base transmit units with radio transmission, one (1) base transmit unit for intercom only (no radios) and five (5) headset hooks shall be installed within the cab. Headsets are not included and ordered separately (misc loose equip).	$4,409
5350-0216	FireCom wireless intercom kit to include a dual radio digital intercom model 5200D, two (2) base transmit units with radio transmission, one (1) base transmit unit for intercom only (no radios) and six (6) headset hooks shall be installed within the cab. Headsets are not included and ordered separately (misc loose equip).	$4,441
5350-0219	Safety Vision officer's side camera SV-622RS w/ SV-512 cable. Requires Safety Vision back-up camera option. Camera to be located on the officer side cab, up high behind front door, below the scene light interlocked with right turn signal. Camera only - does not include monitor.	$907
5350-0221	Setcom intercom kit to include a intercom model IM-900 and four (4) plug in modules shall be installed within the cab. Headsets are not included and ordered separately (misc loose equip).	$1,254
5350-0222	Setcom dual radio intercom kit to include a intercom model IM-900 and four (4) plug in modules shall be installed within the cab. Headsets are not included and ordered separately (misc loose equip).	$1,700
5350-0223	Setcom intercom kit to include a intercom model IM-900, four (4) plug in modules shall be installed within the cab and (1) pump panel plug in module. Headsets are not included and ordered separately (misc loose equip).	$1,594
5350-0224	Setcom dual radio intercom kit to include a intercom model IM-900, four (4) plug in modules shall be installed within the cab and (1) pump panel plug in module. Headsets are not included and ordered separately (misc loose equip).	$2,040
5350-0225	Setcom intercom kit to include a intercom model IM-900 and five (5) plug in modules shall be installed within the cab. Headsets are not included and ordered separately (misc loose equip).	$1,552
5350-0226	Setcom dual radio intercom kit to include a intercom model IM-900 and five (5) plug in modules shall be installed within the cab. Headsets are not included and ordered separately (misc loose equip).	$1,998
5350-0227	Setcom intercom kit to include a intercom model IM-900, five (5) plug in modules shall be installed within the cab and (1) pump panel plug in module. Headsets are not included and ordered separately (misc loose equip).	$1,893
5350-0228	Setcom dual radio intercom kit to include a intercom model IM-900, five (5) plug in modules shall be installed within the cab and (1) pump panel plug in module. Headsets are not included and ordered separately (misc loose equip).	$2,337
5350-0229	Setcom intercom kit to include a intercom model IM-900 and six (6) plug in modules shall be installed within the cab. Headsets are not included and ordered separately (misc loose equip).	$1,552

5350-0230	Setcom dual radio intercom kit to include a intercom model IM-900 and six (6) plug in modules shall be installed within the cab. Headsets are not included and ordered separately (misc loose equip).	$1,998
5350-0231	Setcom intercom kit to include a intercom model IM-900, six (6) plug in modules shall be installed within the cab and (1) pump panel plug in module. Headsets are not included and ordered separately (misc loose equip).	$1,893
5350-0232	Setcom dual radio intercom kit to include a intercom model IM-900, six (6) plug in modules shall be installed within the cab and (1) pump panel plug in module. Headsets are not included and ordered separately (misc loose equip).	$2,337
5350-0233	Setcom wireless intercom kit to include a intercom model IM-900 and four (4) wireless adapters shall be installed within the cab. Headsets are not included and ordered separately (misc loose equip).	$1,822
5350-0234	Setcom wireless dual radio intercom kit to include a intercom model IM-900 and four (4) wireless adapters shall be installed within the cab. Headsets are not included and ordered separately (misc loose equip).	$2,266
5350-0235	Setcom wireless intercom kit to include a intercom model IM-900 and five (5) wireless adapters shall be installed within the cab. Headsets are not included and ordered separately (misc loose equip).	$2,238
5350-0236	Setcom wireless dual radio intercom kit to include a intercom model IM-900 and five (5) wireless adapters shall be installed within the cab. Headsets are not included and ordered separately (misc loose equip).	$2,684
5350-0237	Setcom wireless intercom kit to include a intercom model IM-900 and six (6) wireless adapters shall be installed within the cab. Headsets are not included and ordered separately (misc loose equip).	$2,358
5350-0238	Setcom wireless dual radio intercom kit to include a intercom model IM-900 and six (6) wireless adapters shall be installed within the cab. Headsets are not included and ordered separately (misc loose equip).	$2,805
5350-0239	David Clark model 3800 intercom system with (4) cab head sets and (1) pump panel jack. Custom cabs only. Headsets to be shipped loose.	$8,027
5350-0240	Intercom aerial 3-way. Atkinson Dynamics (Federal). The intercom system shall be installed to provide communications between the turntable control station, the driver side front compartment face (pump panel area) and the aerial tip.	$3,027
5350-0241	Zone Defense side camera. Requires Zone Defense back-up camera option. Camera to be located on officer's side mirror.	$248
5350-0242	FireCom (8) position, (1) which is wireless. Intercom kit to include a digital quad radio monitor intercom model 5400D, one (1) base transmit unit with radio transmission (for wireless), seven (7) plug in modules and eight (8) headset hooks shall be installed within the cab. Headsets are not included and ordered separately (misc loose equip).	$5,482
5350-0243	FireCom intercom kit to include a digital intercom model 5100D, eight (8) plug in modules and headset hooks shall be installed within the cab. Headsets are not included and ordered separately (misc loose equip).	$3,325
5350-0244	FRC ACT 3-way aerial intercom to provide communications between the turntable control station, the aerial tip and [#LOC].	$3,024
5350-0245	FireCom (2) wireless (2) plug in intercom kit to include a digital intercom model 5100D, two (2) base transmit units with radio transmission for forward poisitions, (2) plug in modules for rear positions and four (4) headset hooks shall be installed within the cab. Headsets are not included and ordered separately (misc loose equip).	$3,615
5350-0246	Voyager rear facing camera positioned on officer's side front cab mirror (approx 31" bottom of camera to bottom of cab) interlocked with right turn signal. Camera only - does not include monitor.	$663
5350-0247	Remote 5100D head for Firecom intercom. Location: [#LOC].	$569
5350-0248	Remote 5200D head for Firecom intercom. Location: [#LOC].	$645
5350-0249	Sigtronics US-45S Ultrasound Intercom System with (4) cab jacks, (4) headsets, (2) SE-8RPTT headsets dual speaker, flex boom mic with radio push to talk switch, (2) SE-8 headsets dual speaker, flex boom mic. Includes HLN6961 radio interface cable. Custom cabs only. Headsets to be shipped loose.	$5,193
5350-0251	Camera system Brigade 360. Includes 4 cameras located front, rear, left and right. Requires seperate multiplex color display as the monitor. Note: cameras must be located as high as possible with side cameras centrally located. (Requires approval for stainless steel prodcut.)	$7,039
5350-0252	Brigade Digital Video Recorder model MDR-304 for use with Brigade camera system.	$2,159
5350-0253	Voyager officer camera positioned on the officer's side of the speedlay module up high near the E-ONE Logo looking downward. Camera only - does not include monitor	$663
5350-0254	Zone Defense back-up camera wired through multiplex display. Video displays automatically when transmission is in reverse. Camera only - does not include monitor.	$462
5350-0255	Foot switch driver side Setcom. Trico foot switch to key the microphone includes 16' cable.	$341
5350-0257	Federal Signal (Sony) driver's side camera. Camera to be located up high on driver side of the cab centrally located (above canopy window if applicable) interlocked with left turn signal. Camera only - does not include monitor.	$658
5350-0258	Federal Signal (Sony) officer's side camera. Camera to be located up high on officer side of the cab centrally located (above canopy window if applicable) interlocked with left turn signal. Camera only - does not include monitor.	$658
5350-0261	David Clark model 3800 intercom system with (8) head sets and (1) pump panel jack. Custom cabs only. Headsets to be shipped loose.	$11,401
5350-0262	David Clark model 3800 intercom system with (8) cab head sets. Headsets to be shipped loose.	$9,560

5350-0263	Sigtronics US-12S intercom system with (8) cab jacks, (1) pump panel jack, eight headsets / hooks, PTT switches for driver / officer / ppnl. Does not include radio interface cable. Custom cabs only. Headsets to be shipped loose.	$6,949
5350-0265	FireCom intercom kit to include a digital intercom model 5100D, six (6) plug in modules and headset hooks shall be installed within the cab and one (1) exterior plug in module in L1 adjacent to breaker box (if equipped). Headsets are not included and ordered separately (misc loose equip).	$3,167
5350-0267	FireCom (4) position, (1) which is wireless. Intercom kit to include a digital intercom model 5100D, one (1) base transmit unit with radio transmission (for wireless), (3) plug in modules and (4) headset hooks shall be installed within the cab. Headsets are not included and ordered separately (misc loose equip).	$3,000
5350-0269	Camera system Voyager model AOM713WP 7" waterproof monitor with VCMS10B camera located on officer side pump module up high. Monitor located on pump operator panel.	$1,198
5350-0270	Federal Signal (Sony) driver's side camera. Camera to be located on front cab corner (approx 31" bottom of camera to bottom of cab) interlocked with left turn signal. Camera only - does not include monitor.	$658
5350-0271	Federal Signal (Sony) officer's side camera. Camera to be located on front cab corner (approx 31" bottom of camera to bottom of cab) interlocked with right turn signal. Camera only - does not include monitor.	$658
5350-0275	Zone Defense PathFindIR FLIR camera. Located centered below windshield. No monitor included; camera only. Video wired through multiplex display in cab.	$6,020
5350-0276	Back-up camera speaker. For use with V-MUX electrical system. Located on driver side overhead console.	$207
5350-0277	FireCom (5) position, (1) which is wireless. Intercom kit to include a digital intercom model 5100D, one (1) base transmit unit with radio transmission (for wireless), (4) plug in modules and (5) headset hooks shall be installed within the cab. Headsets are not included and ordered separately (misc loose equip).	$3,075
5350-0278	FireCom wireless intercom kit to include a digital intercom model 5100D, two (2) base transmit units with radio transmission, and two (2) headset hooks shall be installed within the cab. Headsets are not included and ordered separately (misc loose equip).	$2,936
5350-0279	FireCom intercom kit to include a digital intercom model 5100D, six (6) plug in modules and headset hooks shall be installed within the cab and one (1) exterior plug in module at the driver side rear of body. Headsets are not included and ordered separately (misc loose equip).	$3,167
5350-0280	FireCom (6) position, (1) which are wireless. Intercom kit to include a digital intercom model 5100D, two (1) base transmit unit with radio transmission (for wireless), (5) plug in modules and (6) headset hooks shall be installed within the cab. Headsets are not included and ordered separately (misc loose equip).	$3,149
5350-0283	Zone Defense side camera. Requires Zone Defense back-up camera option. Camera to be located on officer's side of cab ahead of cab door driprail approx. 31" above bottom of cab.	$462
5350-0284	Zone Defense side camera. Requires Zone Defense back-up camera option. Camera to be located on driver's side of cab ahead of cab door driprail approx. 31" above bottom of cab.	$462
5350-0285	FireCom (6) position, (2) which are wireless. Intercom kit to include a digital intercom model 5100D, two (2) base transmit unit with radio transmission (for wireless), (4) plug in modules and (4) headset hooks shall be installed within the cab. Headsets are not included and ordered separately (misc loose equip).	$3,660
5350-0286	FireCom (6) position, (2) which are wireless. Intercom kit to include a digital intercom model 5200D, two (2) base transmit unit with radio transmission (for wireless), (4) plug in modules and (6) headset hooks shall be installed within the cab. Headsets are not included and ordered separately (misc loose equip).	$4,391
5350-0287	Brushed stainless steel camera shield.	$237
5350-0289	FireCom (5) position, (2) which are wireless. Intercom kit to include a digital intercom model 5100D, two (2) base transmit unit with radio transmission (for wireless), (3) plug in modules and (5) headset hooks shall be installed within the cab. Headsets are not included and ordered separately (misc loose equip).	$3,647
5350-0291	Sigtronics US-67S intercom system with (6) cab jacks, (1) pump panel jack, six headsets / hooks, PTT switches for driver / officer / ppnl. Does not include radio interface cable. Custom cabs only. Headsets to be shipped loose.	$5,568
5350-0292	Sigtronics US-45D intercom system with (3) cab jacks, (1) pump panel jack, (1) turntable jack, three headsets / hooks, PTT switches for driver/officer/ppnl/turntable. Does not include radio interface cable. Custom cabs only. Headsets to be shipped loose.	$4,107
5350-0293	FireCom intercom kit to include a digital intercom model 5100D, five (5) plug in modules and headset hooks shall be installed within the cab and one (1) exterior plug in module at the driver side rear of body. Headsets are not included and ordered separately (misc loose equip).	$2,977
5350-0294	Back-up camera speaker. For use with V-MUX electrical system. Located in cab on side wall near driver seat.	$207
5350-0295	Remote 5400D head for Firecom intercom. Location: [#LOC].	$806
5350-0296	FireCom (2) wireless (2) plug in intercom kit to include a digital intercom model 5400D, two (2) base transmit units with radio transmission for forward positions, (2) plug in modules for rear positions and four (4) headset hooks shall be installed within the cab. Headsets are not included and ordered separately (misc loose equip).	$4,928
5380-0004	Compartment light incandescent additional (EA). Locate opposite of standard (if applicable) in compartment [#LOC]	$73
5380-0005	Compartment light Truck-Lite LED additional (EA). Locate opposite of standard in compartment [#LOC].	$189

5380-0006	Compartment light incandescent additional (EA). Door(s) mounted. Compartment [#LOC].	$113
5380-0007	Compartment light Truck-Lite LED additional (EA). Door(s) mounted. Compartment [#LOC].	$259
5380-0009	Compartment light package incandescent for medium bodies.	$728
5380-0010	Compartment light package incandescent for large bodies.	$1,132
5380-0012	Compartment light package Truck-Lite LED for medium bodies.	$2,906
5380-0013	Compartment light package Truck-Lite LED for large bodies.	$4,518
5380-0018	Compartment light package POK LED for medium bodies. Includes one light per compartment (two if transverse).	$3,656
5380-0019	Compartment light package POK LED for large bodies. Includes one light per compartment (two if transverse).	$5,818
5380-0022	Compartment light POK LED additional (EA). Locate [#LOC].	$323
5380-0023	Compartment light POK LED additional (EA). Locate [#LOC].	$553
5380-0027	Ground light package for cab and body - small.	$453
5380-0029	Ground light package for cab and body - large.	$680
5380-0030	Ground light package LED - small.	$1,480
5380-0032	Ground light package LED - large.	$2,214
5380-0033	Step light package body - small.	$423
5380-0035	Step light package body - large.	$633
5380-0036	Step light package body LED - small.	$1,448
5380-0038	Step light package body LED - large.	$2,170
5380-0042	Light recessed step Truck-Lite incandescent (additional). Locate [#LOC].	$116
5380-0045	Light recessed step Truck-Lite LED (additional). Locate [#LOC].	$178
5380-0055	Cab and body ground lights to be wired through chassis reverse.	$75
5380-0056	Compartment lights to be wired to automatically activate when park brake is set (IPO cab mtd compartment light switch).	$75
5380-0060	Additional LED ground light (EA). Location: Below [#LOC].	$200
5380-0062	Compartment light Federal Signal LED additional (EA). Locate opposite of standard in compartment [#LOC].	$133
5380-0063	Compartment light Federal Signal LED additional (EA). Door(s) mounted. Compartment [#LOC].	$200
5380-0065	Compartment light package Federal Signal LED for medium bodies.	$2,362
5380-0066	Compartment light package Federal Signal LED for large bodies.	$3,672
5380-0067	Ground light package Federal Signal LED - small.	$1,480
5380-0068	Ground light package Federal Signal LED - large.	$2,215
5380-0069	Step light package body Federal Signal LED - small.	$1,111
5380-0070	Step light package body Federal Signal LED - large.	$1,670
5380-0071	Light Federal Signal recessed step LED (additional). Locate [#LOC].	$142
5380-0072	Additional Federal Signal LED ground light (EA). Location: Below [#LOC]	$187
5380-0074	Compartment light package Whelen PSC0CDCR LED for large bodies. Light to be stacked vertically on forward side of compartment unless implacable.	$5,571
5380-0075	Compartment light incandescent additional (EA). Locate on ceiling of [#LOC].	$73
5380-0076	Compartment light deluxe package Whelen PSC0CDCR LED for medium bodies. Light to be stacked vertically on both sides of compartment.	$7,595
5380-0077	Compartment light package Amdor Luma-Bar LED for medium bodies. Includes one light per compartment (two if transverse).	$2,384
5380-0078	Compartment light Amdor Luma-Bar LED 26-42" long additional (EA). Locate [#LOC].	$231
5380-0079	Compartment light Amdor Luma-Bar LED 48-74" long additional (EA). Locate [#LOC].	$352
5380-0081	Compartment light package Whelen LED for medium bodies.	$4,524
5380-0082	Ground light package Whelen LED - large.	$2,994
5380-0083	Step light package Whelen LED - large.	$2,994
5380-0084	Ground light package for cab and body - large body. There will be 2 lights under each Compartment opening.	$1,354
5380-0086	Ground light package Amdor Luma Bar / Trucklite LED - large. Lights below cab doors to be Luma Bar, lights below bumper and body to be Trucklite.	$2,277
5380-0087	Compartment light package Weldon LED for medium bodies.	$1,943
5380-0090	Compartment light LED (EA). Location: [#LOC].	$189
5380-0091	Whelen PSC0CDCR LED strip light. Locate opposite standard in [#LOC].	$145
5380-0096	Two (2) Whelen PSC0CDCR LED strip light. Locate two (2) opposite side of standard in [#LOC], one (1) 20" down from top of opening and one (1) 10" up from bottom.	$290
5380-0097	Whelen PSC0CDCR LED strip light. Locate one (1) light 15" down from top of opening on opposite side of standard in [#LOC].	$145
5380-0098	Compartment light package Whelen PSC0CDCR LED for medium bodies. Light to be stacked vertically on one side of compartment.	$3,799
5380-0099	Ladder tunnel light LED (EA).	$178
5380-0111	Compartment light Amdor LED for medical cabinet (EA).	$231
5380-0116	Ground light package Amdor Luma-Bar H2O LED - large.	$1,716
5380-0136	Compartment light package Amdor Luma-Bar LED for large bodies. Includes one light per compartment (two if transverse).	$3,776
5380-0138	Compartment light ROM V3 LED 24-36" long additional (EA). Locate [#LOC].	$256
5380-0140	Compartment light ROM V3 LED for medical cabinet (EA).	$314
5380-0141	Compartment light package ROM V3 LED for medium bodies. Includes one light per compartment (two if transverse).	$2,847
5380-0142	Compartment light package ROM V3 LED for medium bodies. Includes two lights per compartment (four if transverse).	$5,693

5380-0144	Compartment light package Amdor Luma-Bar LED for medium bodies. Includes two lights per compartment (four if transverse).	$4,766
5380-0145	Compartment light package Amdor Luma-Bar LED for large bodies. Includes two lights per compartment (four if transverse).	$7,550
5380-0146	Compartment light Amdor LED additional (EA) ceiling mounted as close to door opening as practical. Location: [#LOC].	$231
5380-0147	Compartment light package Weldon LED for large bodies.	$3,022
5380-0148	Compartment light package ROM V3 LED for large bodies. Includes one light per compartment (two if transverse).	$4,527
5380-0149	Compartment light package ROM V3 LED for large bodies. Includes two lights per compartment (four if transverse).	$9,052
5380-0166	Compartment light Trucklite LED additional (EA). Locate in [#LOC].	$189
5380-0168	Compartment light package Federal Signal/Amdor LED for large bodies. Includes single Amdor LED light in compartments L1/R1, L2/R2 and Federal LED in remaining compartments.	$3,052
5380-0202	Step light package body EON LED - large.	$1,055
5380-0203	Step light package body EON LED - small.	$715
5380-0209	Compartment light Amdor LED for medical cabinet (PR).	$461
5380-0210	Compartment light ROM V3 LED for medical cabinet (PR).	$628
5380-0214	Compartment light Truck-Lite LED additional (EA). Locate on ceiling of [#LOC].	$189
5380-0217	Compartment light Whelen Fluorent Plus for medical cabinet (PR).	$651
5380-0218	Step light package Whelen LED - small.	$1,656
5380-0219	Compartment light package, Whelen Fluorent Plus, for large bodies. Includes two lights per compartment (four if transverse).	$9,689
5380-0220	Compartment light package, Whelen Fluorent Plus, for medium bodies. Includes two lights per compartment (four if transverse).	$7,074
5380-0224	Whelen PSC0CDCR LED strip light. Mount light [#LOC].	$145
5380-0226	Compartment light Amdor white lumbar. Location: [#LOC].	$205
5380-0232	Step light package Whelen 2" LED - small.	$804
5380-0235	Ground light package Amdor Luma Bar H2O LED - small.	$910
5380-0236	Additional LumaBar H20 LED ground light (EA). Location: Below [#LOC].	$157
5380-0237	Cab step lighting package. Includes (2) EON LED lights per side IPOS.	$237
5380-0239	Whelen PELCC ground light package LED - large.	$2,681
5380-0240	Compartment light package Amdor Luma-Bar Red LED for medium bodies. Includes one light per compartment (two if transverse).	$2,384
5380-0245	Compartment light ROM V4 LED 24-36" long additional (EA). Locate [#LOC].	$256
5380-0246	Compartment light ROM V4 LED 42-72" long additional (EA). Locate [#LOC].	$429
5380-0247	Compartment light ROM V4 LED for medical cabinet (EA).	$314
5380-0248	Compartment light ROM V4 LED for medical cabinet (PR).	$628
5380-0251	Compartment light package ROM V4 LED for medium bodies. Includes one light per compartment (two if transverse).	$2,847
5380-0252	Compartment light package ROM V4 LED for medium bodies. Includes two lights per compartment (four if transverse).	$5,693
5380-0253	Compartment light package ROM V4 LED for large bodies. Includes one light per compartment (two if transverse).	$4,527
5380-0254	Compartment light package ROM V4 LED for large bodies. Includes two lights per compartment (four if transverse).	$9,052
5380-0257	Compartment light package Amdor Luma-Bar blue LED for large bodies. Includes two lights per compartment (four if transverse).	$7,550
5380-0259	Compartment light ROM V4 LED additional (EA) ceiling mounted as close to door opening as practical. Location: [#LOC].	$314
5380-0265	Compartment light package TecNiq LED for large bodies.	$958
5380-0266	Whelen PELCC lights LED (PR). Wired through work light switch. Location: [#LOC].	$589
5380-0267	Compartment light package ROM V4 LED for Water Master. Includes two lights per compartment.	$1,256
5380-0269	Light Whelen Super-LED dome model 60CREGCS, Red / White. QTY (6). Light Location: Rehab module ceiling configured as close to sales drawing illustration as possible. Switching: White lights shall be wired to a master on/off rocker switch on the REHAB switch panel located in the corner radio cabinet and through the entry door. The red lights shall be wired through the light assembly switch only.	$1,623
5390-0000	Deck light - Unity 12 volt (PR). Location: [#LOC].	$358
5390-0001	Hose bed light Unity. Locate at front area of hose bed. Switched with work light switch in cab.	$174
5390-0002	Hose bed light Federal Signal GH Scene. Locate at the front area of hose bed. Switched with work light switch in cab.	$225
5390-0003	Hose bed light Truck-Lite. Locate at the front area of the hose bed. Switched with work light switch in cab.	$104
5390-0004	Crosslay lights Weldon. Locate on each side at rear of crosslay (SM) or forward of crosslay (TM) approx. 16" from side of body.	$319
5390-0005	Crosslay light deck Unity. Locate to rear of crosslay (SM) or forward of crosslay (TM).	$169
5390-0006	Deck lights, Collins FX-12R (PR). Location: [#LOC].	$1,020
5390-0007	Deck/scene light circuit wiring through chassis reverse. Requires rear deck or scene light.	$75
5390-0008	Federal Signal GH scene lights (PR). Switch in cab (driver and officer side facing lights switched separately). Locate [#LOC].	$421
5390-0018	Whelen 600 series 26 degree scenelights (PR) with weatherproof connectors. Switch in cab (driver and officer side facing lights switched separately). Locate [#LOC].	$333

5390-0019	Whelen 700 series 8-32 degree scenelights (PR) with weatherproof connectors. Switch in cab (driver and officer side facing lights switched separately). Locate [#LOC].	$327
5390-0020	Whelen 900 series Gradient Opti-Scenelight (PR) with weatherproof connectors. Switched in cab (driver and officer side facing lights switched separately). Locate [#LOC].	$333
5390-0022	Crosslay light Truck-Lite. Locate to rear of crosslay (SM) and forward of crosslay (TM as applicable). Switched with work light switch in cab.	$104
5390-0023	Tomar 46H13-C 13 degree scene lights (PR) with weatherproof connectors. Switch in cab (driver and officer side lights switched separately). Locate [#LOC].	$370
5390-0024	Deck Light - Truck-Lite (PR). Location: [#LOC].	$310
5390-0025	Cab scene lights are to be switched with cab doors in addition to standard.	$75
5390-0026	Federal Signal GH Scene cornering lights (PR) wired to turn signals, reverse and work lights. Location: [#LOC]	$806
5390-0030	Deck Lts-Collins FX-6 (PR) Location: [#LOC]	$1,020
5390-0034	Whelen 600 series 26 degree scene lights (PR) with weatherproof connectors. To be used as cornering lights wired to turn signals and four way flashers. Interlock through park brake. Location: [#LOC].	$333
5390-0036	Hose bed light circuit wiring through chassis reverse. Requires hose bed light.	$75
5390-0038	4" LED light (black groument) with diamond plate box mount (PR). Locate (1) at front of hosebed and (1) at the crosslay area. Switch with work light switch.	$693
5390-0039	Federal Signal GH Scene lights (PR). Switch in cab (driver and officer side facing lights switched together). Locate [#LOC]	$421
5390-0040	Weldon 4 x 6 HID scene lights (PR) with weatherproof connectors. Switch in cab (driver and officer side lights switched separately). Locate [#LOC].	$1,183
5390-0041	Whelen 900 series Gradient Opti-Scene lights (PR) with diamond plate mounting box. Switch in cab (driver and officer side facing lights switched separately). Locate [#LOC].	$501
5390-0043	Crosslay light Trucklite. Locate forward of crosslay. Switched with work light switch in cab.	$104
5390-0047	Federal Signal GH scene Light. Locate rearward facing for hose bed storage lighting. Mounted in (1) formed box mounted off forward area of body. Box may shift side to side for best lighting application. Light switched with worklight switch.	$383
5390-0048	Whelen 600 series gradient Super LED scene lights (PR) with weatherproof connectors. Switch in cab (driver and officer side lights switched separately). Locate [#LOC].	$975
5390-0049	Whelen 600 series 26 degree scene lights (PR) with LH46001 castings. Switch in cab (side facing lights switched separately). Locate [#LOC].	$426
5390-0050	Whelen 500 series LED scene lights (PR) with weatherproof connectors. To be used as cornering lights wired to turn signals and four way flashers. Interlocked with park brake. Location: [#LOC]	$817
5390-0052	Federal Signal GH Scene lights (PR) with diamond plate mounting box. Switch in cab (driver and officer side facing lights switched separately). Locate [#LOC].	$764
5390-0053	Whelen 700 series 8-32 degree scene lights (PR) with weatherproof connectors. Switch in tillerman cab (driver and officer side lights switched separately) and wired through tillerman cab doors. Locate (1) each side rear of cab doors above windows.	$400
5390-0054	Hosebed light Trucklite. Locate (1) each side front of hosebed. Switched with work light switch in cab.	$207
5390-0056	Crosslay light Weldon. Locate to rear of crosslay (SM) or forward of crosslay (TM). Switched with work light switch in cab.	$162
5390-0057	Hosebed light Weldon. Locate at front area of hosebed. Switched with work light switch in cab.	$162
5390-0058	Deck Lights - Truck-Lite LED model 81380 (PR). Location: [#LOC].	$392
5390-0059	Whelen 600 series 26 degree scene lights (PR) with diamond plate mounting box. Switch in cab (side facing lights switched separately). Locate [#LOC].	$530
5390-0066	Whelen 600 series gradient Super LED scene lights (PR) with weatherproof connectors and diamond plate mounting boxes. Switch in cab (driver and officer side lights switched separately). Locate [#LOC].	$1,068
5390-0067	Deck light Trucklite. Switched with work light switch in cab. Loc: [#LOC].	$182
5390-0068	Havis Shield 12V HID scene lights model KR-4035X-D (PR). Location(s): [#LOC]. Includes switch in cab for side facing lights.	$1,543
5390-0070	Crosslay light Collins FX-12. Locate to rear of crosslay (SM) and forward of crosslay (TM as applicable).	$512
5390-0071	Hosebed light Collins FX-12. Located center front of hosebed. Switched with work light switch in cab	$512
5390-0073	Deck Light - Whelen LED model PFBP12C (PR). Location: [#LOC].	$1,032
5390-0075	Speedlay light Trucklite. Locate forward area of pump module. Switched with work light switch in cab.	$104
5390-0076	Hose bed light Truck-Lite LED model 81380. Locate at front of hose bed. Switched with work light switch in cab.	$197
5390-0077	Deck Lt-Collins FX-12R (EA) model KR-SB-312 with lift/push up pole. Due to body mount location a position indicator will not be required. Location(s): [#LOC].	$860
5390-0078	Whelen 600 series 26 degree scene lights (3) with weatherproof connectors. Wire through work light switch in cab. Locate back of cab evenly spaced up high.	$498
5390-0080	Deck Light - Hella Mega Beam LED model 996 136-231 (PR) Location: [#LOC].	$568
5390-0081	Deck Light - Grote LED model 63581 (PR) Location: [#LOC].	$1,624
5390-0082	Whelen 600 series 26 degree scene 24VDC lights (PR) with weatherproof connectors. Switch in cab (driver and officer side facing lights switched separately). Locate [#LOC].	$358
5390-0087	Whelen M6 Linear Super LED scene lights (PR). Switched in cab (lights mtd on the sides of apparatus to be switched separately). Locate [#LOC].	$1,143

5390-0088	Crosslay light Whelen PFBP12C LED. Locate to rear of crosslay (SM) and forward of crosslay (TM as applicable). Switched with work light switch in cab.	$517
5390-0089	Hose bed light Whelen PFBP12C LED. Locate center front of hose bed. Switched with work light switch in cab.	$517
5390-0092	Federal Signal 4" round cornering lights (4) wired to turn signals, reverse and work lights. Location: fixed outrigger covers.	$745
5390-0096	Hosebed light Trucklite LED. Locate (1) in each outer hosebed upper front wall (if equipped) and (2) upper front wall of center hosebed . Switched with work light switch in cab.	$839
5390-0102	Crosslay light Truck-Lite LED model 81380. Locate to rear of crosslay (SM) and forward of crosslay (TM as applicable). Switched with work light switch in cab.	$197
5390-0103	Whelen 700 series gradient Super LED scene lights (PR) with weatherproof connectors. Switch in cab (driver and officer side lights switched separately). Locate [#LOC].	$946
5390-0104	Light Whelen Pioneer Plus model PFP1 with recess mount. Wired through work light switch in cab. Location(s): [#LOC].	$1,309
5390-0110	Hosebed light Grote LED model 63581. Locate center front of hosebed. Switched with work light switch in cab.	$813
5390-0111	Crosslay light Grote LED model 63581. Locate to rear of crosslay (SM) and forward of crosslay (TM as applicable). Switched with work light switch in cab.	$813
5390-0117	Whelen 700 series gradient Super LED scene lights (PR). To be used as cornering lights wired to turn signals reverse and work lights. Location: [#LOC].	$975
5390-0118	Grote 63581 LED scene lights (6). Switch in cab (driver and officer side lights switched separately). Lights located (2) each side of body up high (offset forward and rearward) and (2) at rear of body up high. Wetside only.	$3,901
5390-0119	Light Whelen Pioneer Plus model PFP1 with ROM KR-SB-600-W4 pedestal side mount. Switched with work light switch in cab. Location(s): [#LOC].	$2,618
5390-0124	Whelen 600 series gradient Super LED scene lights (3) with weatherproof connectors. Wire through work light switch in cab. Locate back of cab evenly spaced up high.	$1,460
5390-0129	Hose bed light FRC LED900 with diamond plate mounting box. Locate [#LOC]. Switched with worklight switch in cab.	$885
5390-0130	Deck light Whelen PAR-36, model PFBP12C LED (PR). Switched with work light switch in cab. Location: [#LOC].	$1,032
5390-0131	Crosslay light deck Unity. Locate light on the drivers side rearward of the crosslay door mounted on the Hot Shot II pan cover lid.	$169
5390-0132	Warning light Federal Signal QL64-BACKUP (PR) white with clear lens. Surface mounted with bezel. Location: [#LOC]	$593
5390-0133	Deck lights - Unity 12 volt LED spot (PR). Location: [#LOC].	$977
5390-0139	Crosslay light Whelen PFBP12C LED (PR). Locate on each side at rear of crosslay (SM) or forward of crosslay (TM). Location: [#LOC]. Switched with work light switch in cab.	$1,032
5390-0140	Whelen 700 series gradient Super LED scene light (EA) with weatherproof connector(s). Switch in cab (driver and officer side lights if applicable switched separately). Locate [#LOC].	$464
5390-0141	Hosebed light Trucklite LED. Locate (1) in driver outer hosebed upper front wall and (2) upper front wall of center hosebed . Switched with work light switch in cab.	$629
5390-0143	Crosslay light deck Unity. Locate to driver side rear of crosslay.	$169
5390-0144	Unity deck light with model TP-1-I internal pull-up pole. Includes switch on lighthead and driver side overhead console. Location: [#LOC].	$574
5390-0151	Whelen M6 Linear Super LED scene lights (PR) with weatherproof connectors and diamond plate mounting boxes. Location: [#LOC]. Switched with worklight switch in cab.	$1,313
5390-0152	Whelen 600 series gradient Super LED surface mounted scene lights (PR) with weatherproof connectors. Switch in cab (driver and officer side lights switched separately). Locate [#LOC].	$975
5390-0154	Weldon model 3010-2600-30 scene lights (PR) with diamond plate mounting box. Switch in cab (driver and officer side facing lights switched separately). Locate [#LOC].	$724
5390-0155	Hose bed light Amdor H2O. Locate at the front area of hose bed. SideStacker only. Switched with work light switch in cab.	$333
5390-0157	Amdor Lumabar strip light on each side of the hosebed side upper extrusions. Switched with work light switch in cab.	$1,134
5390-0162	Hose bed lights (2) Federal Signal GH Scene. Locate in the upper front wall of the hose bed. One (1) each side equally spaced from the outside of the hose bed. Switched with the work light switch in cab.	$449
5390-0167	Hosebed light Federal Signal LED. Locate (2) upper front wall of SideStacker hosebed. Switched with work light switch in cab.	$327
5390-0168	Hosebed light Trucklite model 44 LED (5). Locate equally spaced on upper front wall of hosebed . Switched with work light switch in cab.	$1,049
5390-0169	Deck light FireTech, model FT-WL3500-60 LED (PR). Switched with work light switch in cab. Location: [#LOC].	$741
5390-0170	Whelen M6 Linear Super LED scene light (EA). Switched in cab (lights mtd on the sides of apparatus to be switched separately). Locate [#LOC].	$572
5390-0173	Federal Signal model 64LEDSCENE LED scene light (PR) with weatherproof connectors. Includes switch accessible to driver (driver and officer side lights switched separately). Locate [#LOC].	$995
5390-0174	Crosslay lights Whelen Nano 3-LED (PR) with white housings and flood lenses. Locate on each side at rear of crosslay (SM) or forward of crosslay (TM) approx. 16" from side of body.	$626
5390-0175	Light Whelen Pioneer Plus model PFP1 with pedestal side mount. Switched with work light switch in cab. Location(s): [#LOC].	$2,925
5390-0178	Light Whelen PFBP6C LED. Locate above L2 on compartment top. Switched through ignition.	$470

5390-0180	Crosslay light Truck-Lite LED model 81380. Locate on the forward upper surface of the pump module over the speedlay module to light from above during hose loading operations. Switched with work light switch in cab.	$197
5390-0182	Crosslay light Amdor H2O. Locate at the front body above crosslay. Switched with work light switch in cab.	$464
5390-0183	Crosslay light Truck-Lite LED model 81380. Locate on front of body up high. Switched with work light switch in cab.	$197
5390-0184	FireTech 8" 12V double stack mini brow light (PR). Includes switch in cab (driver and officer side facing lights switched separately). Location: [#LOC].	$1,939
5390-0185	Hose bed light Federal Signal 64LEDSCENE. Locate at the front area of hose bed. Switched with work light switch in cab. Includes diamond plate mounting box.	$592
5390-0188	Diamond plate mounting boxes (4). For use with scene lights and/or warning lights. Locate on driver and officer side forward and rearward compartment tops outboard; boxes to be full depth of compartment top.	$840
5390-0189	Whelen 600 series gradient Super LED surface mounted scene lights (EA). Switch in cab (driver and officer side lights switched separately). Locate [#LOC].	$487
5400-0003	Engine compartment light (EA).	$123
5400-0004	Incandescent pump panel light - additional (EA). Location: [#LOC].	$92
5400-0006	Pump panel LED light package with (3) lights per side pump panel. Pump panels over 45" may require additional lights. Side mount only.	$1,106
5400-0007	LED pump panel light - additional (EA). Location: [#LOC].	$189
5400-0008	(1) pump panel light over the pump control area to be wired to come on when pump shift is placed in pump. (Side mount forward light noted, Top Mount is center light.)	$39
5400-0010	Incandescent pump compartment light (EA).	$132
5400-0011	LED pump compartment light (EA).	$355
5400-0020	Federal NightFighter light with internal pole. Locate [#LOC]. Switched on light head.	$1,232
5400-0021	Federal NightFighter Light with External Pole. Locate [#LOC]. Switched on light head.	$2,132
5400-0030	Fog Lights, Quartz Halogen (PR) [#COL] and located [#LOC].	$269
5400-0033	Cab Dome Lts Red/White 4" incandescent. White light wired through door and light assembly mounted rocker switch. Red light through light assembly mounted rocker switch.	$552
5400-0034	Dome Lts Red 4" (Ea) [#LOC]. Includes assembly mounted rocker switch.	$132
5400-0035	Dome Lts White 4" incandescent. Includes assembly mounted rocker switch. Requires one for each cab door.	$150
5400-0037	Dome Lts Red/White Incandescent. Package includes two lights mounted in the front and two mounted in the rear of the cab. White light wire through door and light assembly mounted switch. Red light through light assembly mounted switch.	$530
5400-0038	Spotlights, 6" Unity (PR) cab post mount.	$434
5400-0039	Spotlight Specialty 2150 hand held located on officer's side of cab dash - hardwired.	$372
5400-0041	Spotlight, Federal Visibeam II Remote. If one is selected it will be located centered on cab roof mounted on a bracket. If two are selected, they will be located one each side of cab roof to rear of light bar.	$656
5400-0042	Map light, Sunnex [#LOC].	$318
5400-0043	Maplight-Little Lt 18" Flex [#LOC]. Includes on/off switch.	$215
5400-0044	Tillerman tracking lights (PR) - Chrome pedestal mtd Signal Stat #3763 with green lens #9341G. Locate on cab roof to rear of A/C (on top of vista if equipped) approx. 18" apart (each light to be 9" off centerline of cab). Dim filament to use 24 volt bulb ILO 12 volt bulb (reduce the brightness/glare) and be steady burn with headlights. Bright filament to flash with left/right turn signal.	$426
5400-0045	Zico cornering light (PR) with polished stainless steel housing model #ZQL-SS-H7614. The lights are to be located each side in the forward area of the tiller axle wheelwell facing forward and be switched from the tiller cab.	$590
5400-0047	Pump panel light package with (3) lights per side pump panel. Pump panels over 45" may require additional lights. Side mount only.	$621
5400-0049	Pump panel light package - RLP/MM. Includes (2) lights per side pump panel and (2) lights for angled upper control panel.	$457
5400-0050	Pump panel light LED package - RLP/MM. Includes (2) lights per side pump panel and (2) lights for angled upper control panel.	$763
5400-0054	Spotlight Specialty 2150 hand held located on officer's side of cab dash w/12V receptacle.	$372
5400-0057	Dome lts red/white 4" LED (4). Lights to be located two front and two rear. White light wired through door and light assembly mounted rocker switch. Red light through light assembly mounted rocker switch.	$1,431
5400-0059	Optronics model QH-3000 handheld 12v spotlight. To be hardwired on officer's side of cab dash.	$144
5400-0060	Spotlight Specialty 2150 hand held located on driver's side 3 x 3 post - hardwired.	$372
5400-0061	Golight model 2049 remote control spotlight with black housing. If one is selected it will be located centered on cab roof on a pedestal to rear of light bar. If two are selected, they will be located one each side of cab roof to rear of light bar.	$819
5400-0062	Code 3 model GLB3200 remote control spotlight with black housing. If one is selected it will be located centered on cab roof on a pedistal to rear of lightbar. If two are selected, they will be located one each side of cab roof to rear of lightbar.	$1,171
5400-0064	Dome Lts Red/White 4" LED (5). Lights to be located two front and three rear. White light wired through door and light assembly mounted rocker switch. Red light through light assembly mounted rocker switch.	$1,787
5400-0065	Map light, Littlite 18" flexible LED. Location: [#LOC].	$246
5400-0069	Map light Sunnex HS 761-00 with frosted lens. Location: Officer overhead console inboard of AC vent.	$278

5400-0071	Spotlight, Collins CL-12-M hand held located on officer's side of cab dash, hardwired. Includes Handlelok 1004 bracket.	$448
5400-0076	Golight model 2020 permanent spotlight. Location: Centered top of lightbar.	$649
5400-0080	FRC Night Master light with external push-up pole. Locate [#LOC]. Switched on light head.	$1,179
5400-0081	Golight model 2067 remote control spot light with white housing. If one is selected it will be located centered on cab roof on a pedestal to rear of light bar. If two are selected, they will be located one each side of cab roof to rear of light bar.	$819
5400-0082	Maplight-Little Lt 18" Flex [#LOC]. Includes dimmer switch.	$215
5400-0083	Map light Sunnex HS 761-20 with red lens and dimmer switch. Location: Officer overhead console inboard of AC vent.	$278
5400-0084	SpotLt-Fed VisibeamII Remote. If one is select it will be located center on forward vista roof. If two are selected, they will be located one each side front corners of vista cab roof.	$656
5400-0085	Enclose pump panel LED light package with (3) lights per side pump panel. Side mount only.	$1,474
5400-0086	Spotlight Specialty 2150 hand held located on font of map box - hardwired.	$372
5400-0087	Map light Sunnex model HS741-27 with red lens. Location: [#LOC].	$297
5400-0088	LED Amdor Luma-Bar pump panel lighting. (1) each side.	$1,173
5400-0090	Spotlight Specialty 2150 hand held located on officer's side 3 x 3 post - hardwired.	$372
5400-0091	Zico cornering light (PR) with polished stainless steel housing model #ZQL-SS-H7614 wired through turn signals. Includes cornering light relay. Lights to be directed downward. Location: (1) each side of gravel shield (forward).	$975
5400-0092	Weldon pump panel LED light package with (3) lights per side pump panel. Pump panels over 45" may require additional lights. Side mount only.	$901
5400-0093	Golight model 2049 remote control spotlight with black housing (PR) located one each side of cab roof to rear of lightbar. Driver light control located on driver dash switch panel. Officer light control located on officer dash switch panel. (Quest cab only)	$1,638
5400-0097	Maplight-Havis Shield 12" Flex LED. Location: [#LOC].	$239
5400-0098	Pump panel LED light package with (3) Whelen 4"round lights per side pump panel. Pump panels over 45" may require additional lights. Side mount only.	$1,106
5400-0104	Spotlight Specialty 2150 hand held located on officer's side, side facing engine cover offset forward below cab dash - hardwired.	$372
5400-0109	Weldon LED pump panel light - additional (EA). Location: [#LOC].	$140
5400-0110	Weldon pump panel light LED package - RLP/MM. Includes (2) lights per side pump panel and (2) lights for angled upper control panel.	$667
5400-0112	Backing light (PR) Innovative LIghting with polished housing model #580-0200-1, light bulb is a halogen MR16. Location: [#LOC].	$348
5400-0125	SpotLt-Fed VisibeamII Remote. Officer side of cab roof to rear of lightbar mounted on a bracket.	$656
5400-0129	Spotlight Collins CL-12-M hand held located on officer's side of cab dash - hardwired. Includes Handlelok 1004 bracket, shipped loose.	$448
5400-0130	Spotlight Optronics Blue Eye model KB4003 hand held located on officer's side of cab dash - hardwired.	$222
5400-0131	Pump panel LED light package Amdor Luma Bar H2O. Includes (1) light per side pump panel (2 driver if split panel). Side mount only.	$902
5400-0132	Incandescent pump panel and runningboard lighting package. Includes (3) lights shield mounted on the driver side and (1) 4" recessed light mounted on the officer side compartment face.	$621
5400-0133	Golight model 2067 remote control spotlight with white housing. Locate (1) each side cab corner outboard of forward facing lightbar without pedestal. Requires additional side facing warning lights to meet NFPA.	$819
5400-0137	Pump panel LED light package for side mount eMAX. Includes (6) TecNiq EON lights with S/S housings, located (3) each side above lower side intake/discharge panels. Includes S/S light shields. SM eMAX only.	$368
5400-0144	ROM V3 pump panel light LED package - RLP/MM. Includes (1) light per side pump panel and (1) light for angled upper control panel.	$844
5400-0148	Maplight-Little Lt 12" Flex LED. Location: [#LOC].	$246
5400-0149	Pump panel Amdor H2O LED light package with (3) lights per side pump panel. Pump panels over 45" may require additional lights. Side mount only.	$910
5400-0151	Pump compartment light EON LED. Wired to work light.	$212
5400-0154	Spotlight Specialty 2150 hand held located on center of cab dash with plug-in connector.	$372
5400-0156	Spotlight Collins CL-12-M handheld. Light to be hardwired and bracket (Handlelok 1004) to be mounted to the rear of the center console.	$448
5400-0157	Spotlight Whelen PAR46 Super LED hand held located on officer's side of cab dash - hardwired. Mounted to not obstruct driver view of passenger corner mounted mirror (if equipped).	$610
5400-0158	Spotlights, 6" Unity LED (EA) cab post mount. Location: Officer side cab A post.	$507
5400-0159	Optronics model QH-100 handheld 12v spotlight. To be hardwired on officer's side of cab dash.	$144
5400-0164	Spotlights, 6" Unity LED (PR) cab post mount.	$1,013
5400-0165	Pump compartment light EON LED. Light shall be switched from the cab dash with the work light switch.	$212
5400-0166	Fog lights (PR) Perlux 500 series model 05001-5 clear fog Light located [#LOC].	$583
5400-0167	(1) pump panel light over the pump control area to be wired to come on when pump shift is placed in pump. (Rearward light.)	$39
5400-0168	Whelen LED pump compartment light (EA).	$270
5400-0171	Compartment light EON LED IPOS. Location of light(s): [#LOC].	$139
5400-0173	Spotlight Whelen PAR46 Super LED hand held located on officer's side of cab dash with plug-in connector.	$610

5400-0174	Pump panel light package with (3) On Scene Solutions lights per side pump panel. Pump panels over 45" may require additional lights. Side mount only.	$1,050
5400-0179	Zico backing lights (PR) with polished stainless steel housing model #ZQL-SS-LED. Location: [#LOC].	$1,281
5400-0180	Spotlight, Collins CL-12-M hand held located on officer's side of cab dash, hardwired. Includes Handlelok 1004 bracket which shall be mounted at time of final inspection.	$448
5400-0182	(1) pump panel light (center light) over the pump control area to be wired to come on when pump shift is placed in pump.	$39
5400-0187	Map light Sunnex HS 761-00 with frosted lens. Location: Driver and officer overhead console inboard.	$278
5400-0188	Golight model 30201 remote control HID spot light with white housing. If one is selected it will be located centered on cab roof on a pedestal to rear of light bar. If two are selected, they will be located one each side of cab roof to rear of light bar.	$892
5400-0189	Golight model 2020 permanent spotlight with white housing. Centered on forward cab roof.	$819
5400-0190	Weldon/EON pump panel LED light package with (1) Weldon, (2) EON driver pump panel and (3) Weldon officer pump panel. Pump panels over 45" may require additional lights. Side mount only.	$901
5400-0194	(1) pump panel light (center light) over each side mount pump control area to be wired to come on when pump shift is placed in pump.	$78
5400-0196	TecNiq LED backing lights (PR) model E960. Location: [#LOC].	$422
5400-0198	Map light, Sunnex LED model SL9-220. Location: [#LOC].	$685
5400-0199	Pump panel light additional EON LED. Locate (2) driver side up high and (2) officer side up high.	$113
5400-0200	Spotlights, 6" Unity LED (PR) cab post mount. Includes black housings.	$1,013
5450-0002	Quartz light Kwik Raze 500W/110V without pole. Location(s): [#LOC]	$601
5450-0003	Quartz light KwikRaze 500W/110V model KR-905-I with internal telepole. Location(s): [#LOC]	$663
5450-0004	Quartz light KwikRaze 500W/110V model KR-SB-505-W/2-I with external telepole. Location(s): [#LOC]	$1,042
5450-0005	Quartz light Kwik Raze 500W/110V portable. Location(s): [#LOC].	$422
5450-0006	Quartz light KwikRaze 500W/110V model KR-SB-805-TM-I with external mount tripod telepole. Requires 110V receptacle. Location(s): [#LOC]	$1,546
5450-0007	Quartz light Kwik Raze 500W/110V with recess mount. Location(s): [#LOC].	$962
5450-0008	Quartz light Fire Research Focus 750W/110V model FCA510E-S75-SW with internal pull-up pole. Location(s): [#LOC].	$1,468
5450-0009	Quartz light Fire Research Focus 750W/110V model FCA530-S75-SR-SW with side mount push-up pole. Location(s): [#LOC].	$1,552
5450-0010	Quartz light Fire Research Focus 1000W/240V model FCA200-M12 with recess mount. Location(s): [#LOC].	$825
5450-0011	Quartz light Fire Research Optimum 900W/240V model OPA200-R90 with recess mount. Location(s): [#LOC].	$1,079
5450-0012	Quartz light Fire Research Focus 750W/110V model FCA570-S75 without pole. Location(s): [#LOC].	$1,146
5450-0015	Quartz light Fire Research Focus 750W/120V model FCA600-S75-ON-FC603 with 40" telescopic tripod pole. Location(s): [#LOC].	$1,571
5450-0016	Quartz light Fire Research Focus 750W/110V model FCA540-S75-SW with side mount pull up pole. Location(s): [#LOC].	$1,525
5450-0017	Quartz light Fire Research Focus 750W/110V model FCA512-S75-CLP64.5-SW with 64.5" inner pole and 31.5" outer pole. Location(s): [#LOC]	$1,640
5450-0019	Quartz light Fire Research Focus 750W/110V model FCA802-S75-01 with brow mount (EA). Location(s): [#LOC].	$888
5450-0020	Quartz light Fire Research Focus 1500W/240V model FCA600-M15-ON-FC603 with telescopic tripod pole. Location(s): [#LOC].	$1,655
5450-0021	Quartz light Fire Research Optimum 750W/110V model OPA570-S75 without pole. Location(s): [#LOC].	$1,214
5450-0022	Quartz light Fire Research Optimum 150W/12V model OPA802-HD15-01 with brow mount (EA). Includes switch accessible to driver. Location(s): [#LOC].	$1,497
5450-0023	Quartz light Fire Research Optimum 150W/12V model OPA510E-HD15-SW with internal pole. Includes switch accessible to driver. Location(s): [#LOC].	$1,793
5450-0024	Quartz light Fire Research Optimum 750W/110V model OPA510E-S75-SW with internal pull up pole. Location(s): [#LOC].	$1,514
5450-0028	Quartz light Fire Research Optimum 750W/110V model OPA530-S75-SR-SW with side mount external pole. Location(s): [#LOC].	$1,596
5450-0029	Quartz light Fire Research Optimum 750W/110V model OPA540-S75-SW with side mount pull up pole. Location(s): [#LOC]	$1,463
5450-0030	Quartz light Fire Research Optimum 750W/110V model OPA600-S75-ON-OP603 with 40" telescopic tripod pole. Location(s): [#LOC].	$1,587
5450-0031	Quartz light Fire Research Optimum 750W/110V model OPA802-S75-01 with brow mount (EA). Location(s): [#LOC].	$950
5450-0032	Quartz light Fire Research Optimum 900W/240V model OPA600-R90-ON-OP603 with telescopic tripod pole. Location(s): [#LOC]	$1,687
5450-0033	Quartz light Fire Research Optimum 150W/12V model OPA530-HD15-SR-SW with side mount external pole. Includes switch accessible to driver. Location(s): [#LOC].	$2,001
5450-0034	Quartz light MagnaFire 900W/240V model KR-739-HD with portable base. Requires 220V receptacle. Location(s): [#LOC]	$619
5450-0035	Quartz light MagnaFire 900W/240V model KR-1939 with recess mount. Location(s): [#LOC].	$855

5450-0036	Quartz light MagnaFire 900W/240V model KR-SB-639 without pole. Location(s): [#LOC].	$991
5450-0037	Quartz light MagnaFire 900W/240V model KR-939-I with internal pole. Location(s): [#LOC].	$942
5450-0038	Quartz light MagnaFire 900W/240V model KR-SB-539-W/2-I with external pole. Location(s): [#LOC].	$1,233
5450-0039	Quartz light MagnaFire 900W/240V model KR-SB-839-TM-I with external mount tripod telepole. Requires 220 volt receptacle. Location(s): [#LOC].	$1,341
5450-0040	Quartz light MagnaFire 900W/240V model KR-1339 with low profile mount. Location(s): [#LOC]	$979
5450-0041	Quartz light MagnaFire 900W/240V model KR-1539 with cab brow mount (EA). Not available in front center due to DOT lights. Location(s): [#LOC].	$869
5450-0045	Quartz light MagnaFire 750W/120V model KR-736-HD with portable base. Requires 110V receptacle. Location(s): [#LOC]	$571
5450-0046	Quartz light MagnaFire 750W/120V model KR-1936 with recess mount. Location(s): [#LOC].	$887
5450-0047	Quartz light MagnaFire 750W/120V model KR-SB-636 without pole. Location(s): [#LOC].	$1,026
5450-0048	Quartz light MagnaFire 750W/120V model KR-936-I with internal pole. Location(s): [#LOC].	$1,017
5450-0049	Quartz light MagnaFire 750W/120V model KR-SB-536-W/2-I with external pole. Location(s): [#LOC].	$1,293
5450-0050	Quartz light MagnaFire 750W/120V model KR-SB-836-TM-I with external mount tripod telepole. Requires 110V receptacle. Location(s): [#LOC].	$1,489
5450-0051	Quartz light MagnaFire 750W/120V model KR-1336 with low profile mount. Location(s): [#LOC]	$913
5450-0052	Quartz light MagnaFire 750W/120V model KR-1536 with cab brow mount (EA). Location(s): [#LOC].	$806
5450-0053	Quartz light MagnaFire 750W/120V model KR-SB-436-I-XL with through body push up pole. Location(s): [#LOC]	$1,241
5450-0056	Quartz light KwikRaze 1500W/220V model KR-SB-815-TM-I with external mount tripod telepole. Requires 220V receptacle. Location(s): [#LOC]	$1,601
5450-0058	Quartz light Fire Research Optimum 1500W/240V model OPA510E-M15-SW with internal pull-up pole. Location(s): [#LOC].	$1,616
5450-0059	Quartz light Fire Research Optimum 750W/110V portable model OPA700-S75-OP703. Location(s): [#LOC].	$808
5450-0060	Quartz light Fire Research Focus 750W/120V model FCA300U-S75 with brow mount. Location: Center of cab brow.	$888
5450-0062	Quartz light MagnaFire 750W/120V model KR-SB-236-I-SW2 SPCL with top raise external pole. Location(s): [#LOC]	$1,254
5450-0065	Quartz light Fire Research Optimum 1000W/240V model OPA656-M12-ON-OP603 with telescopic tripod pole. Location(s): [#LOC]	$1,687
5450-0067	Quartz light Fire Research Focus 500W/110V model FCA802-S50-01 with brow mount (EA). Light head and mount to be powder coated black. Location(s): [#LOC]	$865
5450-0068	Quartz light MagnaFire 750W/120V model KR-SB-436-I-XL with through ceiling push up pole (PR). Outer pole to be 12", inner pole to be 48". Both lights to be on one breaker. Includes support tubes on interior of cab and switch each side on rear cab wall to control lights. Location: One each side rear corner of cab roof.	$3,050
5450-0069	Quartz light MagnaFire 5000 500W/120V model KR-2555 with cab brow mount (EA). Location(s): [#LOC]. Not available in front center due to DOT lights.	$713
5450-0070	Quartz light MagnaFire 5000 500W/120V model KR-SB-555-W/2-I with external pole. Location(s): [#LOC].	$1,120
5450-0072	Quartz light Fire Research Optimum 1500W/240V model OPA100 with internal pole. Location(s): [#LOC].	$1,486
5450-0073	Quartz light Fire Research Focus 750W/120V model FCA300U-S75 with brow mount. Light head and mount to be powder coated black. Location: Center of cab brow.	$934
5450-0074	Quartz light timer (ea).	$135
5450-0075	Quartz light Fire Research Optimum 900W/240V model OPA510E-R90-SW with top raise pole. Location(s): [#LOC].	$1,596
5450-0076	Quartz light MagnaFire 5000 750W/120V model KR-3556 with front cab brow mount (EA). Quest cabs only. Location(s): [#LOC].	$806
5450-0077	Quartz light MagnaFire 5000 750W/120V model KR-3656 with side cab brow mount (EA). Quest cabs only. Location(s): [#LOC]	$806
5450-0078	Quartz light Fire Research Focus 750W/110V model FCA802-S75-01 with brow mount (EA). Light head and mount to be powder coated black. Location(s): [#LOC]	$934
5450-0079	Quartz light MagnaFire 750W/120V model KR-1536 with cab brow mount (EA). Light head and mount to be powder coated black. Location(s): [#LOC].	$854
5450-0080	Quartz light Fire Research Focus 750W/110V model FCA830-S75 with brow mount (EA). Quest and CII LTH aerial cabs only. Location(s): [#LOC].	$888
5450-0081	Quartz light Fire Research Optimum 750W/110V model OPA656-S75-ON-OP603 with 28" telescopic tripod pole. Location(s): [#LOC]	$1,587
5450-0082	Quartz light Fire Research Focus 750W/110V model FCA656-S75-ON-FC603 with 28" telescopic tripod pole. Location(s): [#LOC].	$1,571
5450-0083	Quartz light Fire Research Focus 1500W/240V model FCA530-M15-SR-SW with side mount push up pole. Location(s): [#LOC].	$1,558
5450-0084	Quartz light Fire Research Focus 150W/12V model FCA510E-D15-SW with internal pole. Includes switch accessible to driver. Location(s): [#LOC].	$1,116
5450-0089	Quartz light MagnaFire 900W/240V model KR-SB-539-W/2-I with external pole. Light head to be powder coated black. Location(s): [#LOC].	$1,279
5450-0090	Aerial circuit timer.	$251

5450-0092	Quartz light Fire Research Focus 750W/110V model FCA530-S75-SR-SW with side mount push-up pole. Light head and mounts to be powder coated black. Location(s): [#LOC].	$1,599
5450-0094	Quartz light Extenda-Lite 750W/110V model E-4750-EX-TL-UI-EX. Location(s): [#LOC].	$844
5450-0095	Quartz light Fire Research Focus 150W/12V model FCA300U-D15 with brow mount. Includes switch accessible to driver. Location: center of cab brow.	$1,024
5450-0096	Quartz light Fire Research Optimum 1000W/110V portable model OPA700-M10-OP703. Location(s): [#LOC].	$923
5450-0098	Quartz light Fire Research Optimum 1500W/240V model OPA600-M15-ON-OP603 with telescopic tripod pole. Location(s): [#LOC]	$1,754
5450-0099	Quartz light Fire Research Optimum 1500W/240V model OPA200-M15 with recess mount. Location(s):[#LOC].	$985
5450-0102	Quartz light Fire Research Focus 1000W/120V model FCA530-M10-SR-SW-ON with external push up pole. Location(s): [#LOC].	$1,655
5450-0114	Quartz light Fire Research Focus 1000W/120V model FCA200-M10 with recess mount. Location(s): [#LOC].	$825
5450-0115	Light Whelen 12 volt Pioneer Plus model PFP1 with brow mount (EA). Includes switch in cab (driver and officer side facing lights switched separately). Location(s): [#LOC].	$1,527
5450-0116	Quartz light Fire Research Focus 500W/110V model FCA600-S50-ON-FC603 with 40" telescopic tripod pole. Location(s): [#LOC].	$1,571
5450-0117	Light Whelen Pioneer Plus model PFP2 12V with brow mount and PFLASH (EA). Includes switch in cab (driver and officer side facing lights switched separately). Location(s): [#LOC].	$2,333
5450-0118	Quartz light Fire Research Focus 1000W/240V model FCA802-M12-01 with brow mount (EA). Location(s): [#LOC].	$942
5450-0121	Quartz light Fire Research Focus 1500W/240V model FCA530-M15-SR-SW-ON with external push up pole. Location(s): [#LOC].	$1,574
5450-0122	Light Whelen Pioneer Plus model PFP2 12V with brow mount (EA). Includes switch in cab accessible to driver (driver and officer side facing lights switched separately). Location(s): [#LOC].	$2,218
5450-0123	Light Whelen Pioneer Plus LED model PFP2 12V with PBAPEDD pedestal mount. Includes switch in cab (side facing lights switched separately). Location(s): [#LOC].	$2,195
5450-0124	Light Whelen Pioneer model PFA2 with brow mount (EA). Includes switch in cab (driver and officer side facing lights switched separately). Location(s): [#LOC].	$1,783
5450-0125	Quartz light MagnaFire 5000 750W/120V model KR-2556 with cab brow mount (EA). Location(s): [#LOC].	$806
5450-0126	Quartz light Fire Research Focus 750W/110V model FCA642-S75-ON-FC6F3 with 16.625" telescopic tripod pole. Location(s): [#LOC].	$1,571
5450-0127	Quartz light Fire Research Focus 150W/12V model FCA802-H15-01 with brow mount (EA). Includes switch accessible to driver. Location(s): [#LOC]	$1,449
5450-0128	FRC quartz light head and bracket to be powdered coated job color (EA). Requires paint spray out sent to FRC for color matching.	$180
5450-0130	Quartz light MagnaFire 750W/120V model KR-2556 with cab brow mount (EA). Location(s): [#LOC]. Not available in front center due to DOT lights.	$806
5450-0134	Light Whelen Pioneer Plus model PFP2 12V with brow mount powder coated black (EA). Includes switch in cab (driver and officer side facing lights switched separately). Location(s): [#LOC].	$2,218
5450-0135	Quartz light Fire Research Focus 150W/12V model FCA802-H15-01 with brow mount (EA). Light head and mount to be powder coated black. Includes switch accessible to driver. Location(s): [#LOC].	$1,491
5450-0136	Light Whelen Pioneer Plus model PCP2 flood/spot with brow mount (EA). Includes switch in cab (driver and officer side facing lights switched separately). Location(s): [#LOC].	$2,237
5450-0138	Light Whelen Pioneer Plus model PFP2AC with Quest brow mount (EA). Location(s): [#LOC].	$2,172
5450-0139	Light Whelen Pioneer Plus model PFP1AC 120V with recess mount. Location(s): [#LOC].	$1,357
5450-0140	Light Whelen Pioneer model PFA1 with pedistal mount. Includes switch in cab (driver and officer side facing lights switched separately). Location(s): [#LOC].	$1,463
5450-0141	Quartz light Fire Research Optimum 150W/12V model OPA230-H15 with recess mount. Includes switch in cab console. Location(s): [#LOC].	$1,527
5450-0143	Light Whelen 12V Pioneer model PFP2 with PBA203 recess mount. Includes switch accessible to driver (side facing lights switched separately). Location: [#LOC].	$2,109
5450-0144	Fire Research Evolution 12V LED scene light model FCA530-V15-SW-H with external push-up pole. Includes switch in cab accessible to driver. Location: [#LOC].	$2,249
5450-0145	Light Whelen Pioneer Plus model PFP1 12V with recess mount. Includes switch accessible to driver (side facing lights switched separately). Location(s): [#LOC].	$1,309
5450-0153	Light Whelen Pioneer Plus model PFP1 with bail mount. Includes switch in cab accessible to driver (side facing lights switched seperately). Location(s): [#LOC].	$1,309
5450-0154	Fire Research Evolution 12V LED scene light model FCA510E-V15-SW with internal pull-up pole. Includes switch accessible to driver. Location: [#LOC].	$2,249
5450-0155	Fire Research Evolution 12V LED scene light model FCA802-V15 with brow mount (EA). Includes switch accessible to driver (driver and officer side facing lights switched separately). Location: [#LOC].	$1,934
5450-0156	Quartz light Fire Research Evolution 12V LED model FCA300U-V15 with brow mount. Includes switch accessible to driver. Location: center of cab brow.	$1,867
5450-0161	Light Whelen 12V Pioneer model PCP2 with internal push-up pole mount (Havis KR-SB-4PCP2-S-I). Includes switch on light head. Location(s): [#LOC].	$2,271
5450-0162	Light Whelen Pioneer Plus model PFP2AC 120V with brow mount (EA). Location(s): [#LOC].	$2,172

5450-0166	Light Whelen Pioneer Plus model PFP2AC 120V with recess mount. Location(s): [#LOC].	$2,518
5450-0167	Light Whelen Pioneer Plus model PFP2 12V with Quest brow mount (EA). Includes switch in cab accessible to driver (driver and officer side facing lights switched separately). Location(s): [#LOC].	$2,218
5450-0168	Floodlight Whelen/ROM model KR-SB-8PFP2-SL-I-TM with external mount tripod telepole. Location(s): [#LOC].	$2,730
5450-0169	Quartz light MagnaFire 750W/120V model KR-SB-836-TM-SL-I with external mount tripod telepole. Requires 110V receptacle. Location(s): [#LOC].	$1,489
5450-0170	Fire Research Evolution 12V LED model FCA210-V12 with recess mount. Includes switch in cab accessible to driver. Location(s): [#LOC].	$1,784
5450-0171	Light Whelen Pioneer model PFA1 with PBA103 recess mount. Includes switch accessible to driver. Location: [#LOC].	$1,309
5450-0172	Light Whelen Pioneer Plus model PFP1 12V with vertical bail mount. Includes switch in cab accessible to driver (side facing lights switched seperately). Location(s): [#LOC].	$1,309
5450-0174	Light Whelen Pioneer Plus model PFP1AC 120V with recess mount. Location(s): [#LOC].	$1,357
5450-0175	Light Whelen Pioneer Plus model PFP2AC 120V with brow mount powder coated black (EA). Location(s): [#LOC].	$2,172
5450-0176	Light Whelen Pioneer Plus LED model PFP2 12V with pedestal mount powder coated black. Includes switch in cab (side facing lights switched separately). Location(s): [#LOC].	$2,195
5450-0179	Light Whelen Pioneer model PFA2 with brow mount powder coated FLNA3225E-1 (EA). Includes switch in cab (driver and officer side facing lights switched separately). Location(s): [#LOC].	$1,842
5450-0181	Light Fire Research Spectra 12V LED model SPA510E-Q20-SW with internal pull-up pole. Includes switch accessible to driver. Location(s): [#LOC].	$2,690
5450-0183	Fire Research Spectra 12V LED scene light model SPA530E-Q20-SW-H with external push-up pole. Includes switch in cab accessible to driver. Location: [#LOC].	$2,689
5450-0185	Light Whelen Pioneer model PFA1 with brow mount (EA). Includes switch in cab (driver and officer side facing lights switched separately). Location(s): [#LOC].	$1,159
5450-0186	Light Whelen Pioneer model PFA1 with vertical bail mount. Includes switch in cab (driver and officer side facing lights switched separately). Location(s): [#LOC].	$1,079
5450-0188	Quartz light MagnaFire 5000 500W/120V model KR-SB-555-W/2-I-SL with (special length) external pole. Location(s): [#LOC].	$1,120
5450-0189	Light Whelen Pioneer Plus model PFP1AC 120V with brow mount (EA). Location(s): [#LOC].	$1,546
5450-0190	Fire Research Spectra 12V LED model SPA260-Q15 with surface mount. Includes switch accessible to driver. Location: [#LOC].	$1,811
5450-0191	Light Fire Research Spectra 120V LED model SPA600-K20-ON-SPA603 with 40" telescopic tripod pole. Location(s): :[#LOC].	$3,102
5450-0192	Light Fire Research Spectra 120V LED model SPA830-K20 with universal brow mount (EA). Location: [#LOC].	$2,349
5450-0193	Light Fire Research Spectra LED 110V model SPA510-K20 with internal pull-up pole. Location(s): [#LOC].	$2,401
5450-0194	Light Whelen Pioneer model PCP2 with PBA203 recess mount. Includes switch in cab accessible to driver (driver and officer side facing lights switched separately). Location: [#LOC].	$2,151
5450-0195	Whelen Micro Pioneer Series Super LED Work/Scene Light Model MPR15W with 15 degree recess mount. Includes switch accessible to driver (side facing lights switched seperately). Location: [#LOC].	$711
5450-0196	Brow light brackets (not housing) shall be painted FLNA 10219. This shall include forward, rear and side facing if so equipped.	$169
5450-0197	Light Whelen Pioneer model PFP2 12V powder coated FLNA3225E-1 red with internal top raise pole mount (ROM model KR-9PFP2-S). Includes switch on light head. Location: [#LOC].	$2,072
5450-0198	Light Whelen Pioneer Plus model PFP2 12V with brow mount powder coated FLNA3225E-1 red (EA). Includes switch in cab accessible to driver (driver and officer side facing lights switched separately). Location(s): [#LOC].	$2,313
5450-0199	Light Whelen Pioneer Plus model PFP1 12V with vertical bail mount powder coated FLNA3225E-1 red. Includes switch in cab accessible to driver (side facing lights switched seperately). Location(s): [#LOC].	$1,405
5450-0200	Fire Research Spectra 120V LED scene light model SPA530-K20-SW-H with external push-up pole. Location: [#LOC].	$2,689
5450-0201	Light Fire Research Spectra LED 12V model SPA570-Q20 without pole. Includes switch accessible to driver (driver and officer side facing lights switched seperately). Location(s): [#LOC].	$2,486
5450-0202	Fire Research Spectra 120V LED model SPA260-K15 with surface mount. Location: [#LOC].	$2,189
5450-0204	Light Whelen Micro Pioneer Plus model MPBW with bail mount. Includes switch in cab accessible to driver (side facing lights switched separately). Location: [#LOC].	$715
5450-0207	Light Whelen Pioneer Plus LED model PFP2 120V with pedestal mount powder coated black. Location(s): [#LOC].	$2,359
5450-0208	Fire Research Spectra 12V LED model SPA802-Q20-02 with brow mount (EA). Includes switch accessible to driver. Location: [#LOC].	$2,349
5450-0209	Fire Research Spectra 12V LED model SPA802-Q20-02 with brow mount, powder coated black (EA). Includes switch accessible to driver. Location: [#LOC].	$2,398
5450-0210	Light Fire Research Spectra LED 240V model SPA570-J20 without pole. Location(s): [#LOC].	$2,486
5450-0211	Light Fire Research Spectra 240V LED model SPA512-J20-SW with internal thru roof push up pole. Includes switch accessible to driver. Location(s): [#LOC].	$2,863
5450-0212	Quartz light Fire Research Focus 1500W/240V model FCA570-M15 without pole. Location(s): [#LOC].	$1,250

5450-0214	Light Whelen Pioneer Plus model PFP1 12V powder coated black with vertical bail mount. Includes switch in cab accessible to driver (side facing lights switched seperately). Location(s): driver and officer side rear of body up high.	$1,309
5450-0215	Light Whelen 12V Pioneer model PFP2 powder coated black with PBA203 recess mount. Includes switch accessible to driver (side facing lights switched separately). Location: driver and officer side centrally located in center area recessed into roof top compartment raise.	$2,109
5450-0216	Quartz light Fire Research Spectra 120V LED model SPA802-K20-02 with brow mount (EA). Location: [#LOC].	$2,349
5450-0218	Fire Research Evolution 12V LED model FCA210-V12 with recess mount powder coated black. Includes switch in cab accessible to driver. Location(s):[#LOC].	$1,826
5450-0220	Quartz light MagnaFire 750W/120V model KR-1936 with recess mount in diamond plate mounting box. Location(s): [#LOC].	$1,053
5450-0221	Quartz light MagnaFire 5000 750W/120V model KR-2556 with cab brow mount (EA). Light head to be powder coated black. Location(s): [#LOC].	$883
5450-0222	Quartz light MagnaFire 750W/120V model KR-1336 with low profile mount. Light head to be powder coated black. Location(s): [#LOC]	$999
5450-0223	Quartz light MagnaFire 750W/120V model KR-SB-536-W/2-I with external pole. Light head to be powder coated black. Location(s): [#LOC].	$1,342
5450-0224	Quartz light Fire Research Focus 1000W/120V model FCA600-M10-ON-6F3 with telescopic tripod pole. Location(s): [#LOC].	$1,699
5450-0226	Light Whelen Pioneer Plus model PFP1AC 120V with vertical bail mount. Location(s): [#LOC].	$1,488
5450-0227	Light Whelen Pioneer Plus LED model PFP1 12V with PBAPEDD pedestal mount. Includes switch in cab (side facing lights switched separately). Location(s): [#LOC].	$1,563
5450-0230	Floodlight Whelen/ROM model KR-SB-8PFP2AC-I-TM with external mount tripod telepole. Pole length required shall be determined upon mounted location. Requires 110V receptacle. Location(s): [#LOC].	$2,730
5450-0231	Light Whelen Pioneer Plus LED model PFP2 12V with PBAPEDD pedestal mount powder coated black housing, mounting brackets applicable shall also be black. Includes switch in cab (side facing lights switched separately). Location(s): [#LOC].	$2,239
5450-0232	Light Whelen Pioneer Plus model PCP2AFSB 120VAC flood/spot with brow mount powder coated black (EA). Location(s): [#LOC].	$2,237
5450-0233	Light Whelen Pioneer Plus model PCP2ASFB 120VAC spot/flood with brow mount powder coated black (EA). Location(s): [#LOC].	$2,237
5450-0234	Light Whelen Pioneer Plus model PCP2AFSB 120VAC flood/spot with pedestal mount powder coated black. Location(s): [#LOC].	$2,233
5450-0235	Light Whelen Pioneer Plus model PCP2ASFB 120VAC spot/flood with pedestal mount powder coated black. Location(s): [#LOC].	$2,233
5450-0236	Light Whelen 150W/120V model KR-7PFPAC2-HD with portable base, powder coated black and Fire Power FP11 male pigtail. Requires 110V receptacle. Location(s): [#LOC].	$2,871
5450-0237	Light Whelen Pioneer Plus 12V model PCP2 flood/spot with pedestal mount. Includes switch in cab (driver and officer side facing lights switched separately). Location(s): [#LOC].	$2,233
5450-0239	Light Whelen Pioneer Plus model PCP2 flood/spot with pedestal mount (EA). Includes switch in cab (driver and officer side facing lights switched separately). Location(s): [#LOC].	$2,233
5450-0240	Light Whelen Pioneer Plus model PFP2 12V with Quest brow mount (EA) powder coated black. Includes switch in cab accessible to driver (driver and officer side facing lights switched separately). Location(s): [#LOC].	$2,218
5450-0242	Fire Research Spectra 12V LED model SPA260-Q15 powder coated black with surface mount. Includes switch accessible to driver. Location: [#LOC].	$1,861
5450-0243	Quartz light Fire Research Spectra 120V LED model SPA260-K15 powder coated black with surface mount. Location: [#LOC].	$2,239
5450-0244	Light Whelen Pioneer Plus LED model PCP3 12V combination flood and 8 degree spotlight with pedestal mount adapter. Includes switch in cab (side facing lights switched separately). Location(s): [#LOC].	$2,499
5450-0245	Light Whelen Pioneer Plus model PFP2AC 120V with brow mount (EA). Location(s): [#LOC].	$2,172
5450-0246	Light Whelen Micro Pioneer Plus model MPBB with bail mount powder coated black. Includes switch in cab accessible to driver (side facing lights switched separately). Location: [#LOC].	$715
5450-0247	Quartz light MagnaFire 750W/120V model KR-1936 with recess mount powder coated black. Location(s): [#LOC].	$927
5450-0248	Quartz light Fire Research Optimum 1000W/240V model OPA510E-M12-SW with internal pull up pole. Location(s): [#LOC].	$1,616
5450-0252	Light Whelen Pioneer model PFA2 with PBA203 recess mount. Includes switch in cab (driver and officer side facing lights switched separately). Location: [#LOC].	$1,899
5450-0254	Fire Research Evolution 12V LED model FCA830-V15 brow mount powder coated black. Quest cab only. Includes switch accessible to driver (driver and officer side facing lights switched separately). Location [#LOC].	$1,853
5450-0255	Light Fire Research Evolution LED 12V model FCA580-V15 side fixed mount. Includes switch accessible to driver. Location(s): [#LOC].	$1,831
5450-0256	Floodlight Whelen PFP1AC 120v with external mount tripod telepole. Requires 110V receptacle. Location(s): [#LOC].	$2,485
5450-0257	Light Whelen Pioneer model PFP2 12V with external bottom raise pole mount. Includes switch accessible to driver. Location(s): [#LOC].	$2,447
5450-0258	Light Whelen Pioneer Plus model PFP2 12V with internal top raise pole mount. Includes switch accessible to driver. Location: [#LOC].	$2,212

5450-0259	Floodlight Whelen PFP2AC 110V with external mount 50" tripod telepole. Requires 110V receptacle. Location(s): [#LOC].	$3,077
5450-0260	Light Whelen Pioneer model PCP2AP 120V with external bottom raise pole mount. Location(s): [#LOC].	$2,770
5450-0261	Light Whelen Pioneer model PFP2AC 120V with external bottom raise pole mount. Location(s): [#LOC].	$2,546
5450-0262	Light Whelen Pioneer model PFP2 12V with external bottom raise pole mount. Includes switch accessible to driver. Location(s): [#LOC].	$2,461
5450-0263	Light Whelen Pioneer Plus model PCP2 12V flood/spot with brow mount powder coated black. Includes switch in cab (driver and officer side facing lights switched separately). Location(s): [#LOC].	$2,237
5450-0264	Light Whelen Pioneer Plus LED model PFP2 120V with pedestal mount. Location(s): [#LOC].	$2,359
5450-0265	Light Whelen Pioneer model PFP2AC 120V with internal top raise pole mount. Location: [#LOC].	$2,487
5450-0266	Light Whelen Pioneer Plus model PFP2 12V with recess mount. Includes switch accessible to driver (driver and officer switched seperately) and diamond plate mounting boxes for recess mount. Location: [#LOC].	$2,377
5450-0267	Light Whelen 150W/120V with portable base. Requires 110V receptacle. Location(s): [#LOC].	$2,296
5450-0268	Light Fire Research Spectra LED 120V model SPA570-K20 without pole powder coated black. Location(s): [#LOC].	$2,535
5450-0269	Light Fire Research Spectra LED 110V model SPA510-K20 with internal pull-up pole powder coated black. Location(s): [#LOC].	$2,451
5450-0270	Fire Research Evolution 12V LED scene light model FCA510E-V15-SW with internal pull-up pole powder coated black. Includes switch accessible to driver. Location: [#LOC].	$2,299
5450-0271	Akron SceneStar 120V LED model ELSS-XLAC-SM2-PS-UI-TL. Location: [#LOC].	$2,195
5450-0272	Light Whelen Pioneer model PFP2AC 120V powder coated black with internal bottom raise pole mount. Location: [#LOC].	$2,487
5450-0273	Quartz light Fire Research Optimum 1500W/240V model OPA642-M15-ON-603 with 16.625" telescopic tripod pole. Location(s): [#LOC].	$1,649
5450-0274	Fire Research Spectra 12V LED scene light model SPA530E-Q20-SW-H with external push-up pole powder coated black. Includes switch in cab accessible to driver. Location: [#LOC].	$2,738
5450-0276	Akron SceneStar 12V LED model ELSS-XLDC-PU-UI-TL. Location:[#LOC].	$1,916
5450-0277	Light Whelen Pioneer model PFP2 12V powder coated black with external bottom raise pole mount. Includes switch accessible to driver. Location(s) [#LOC].	$2,447
5450-0278	Light Whelen Pioneer Plus model PFP2 12V with recess mount. Location(s): [#LOC].	$2,518
5450-0279	Floodlight Whelen PFP2AC 110V powder coated black with external mount 40" tripod telepole. Requires 110V receptacle. Location(s): [#LOC].	$3,077
5450-0280	Light Whelen Pioneer model PFP1AC 120V with internal top raise pole mount. Includes switch accessible to driver. Location: [#LOC].	$1,776
5450-0281	Quartz light Fire Research Focus 1000W/240V model FCA300U-M12 with roof mount. Location(s): [#LOC].	$942
5450-0282	Light Whelen Pioneer model PCP2 12V powder coated black with external bottom raise pole mount. Includes switch accessible to driver. Location(s) [#LOC].	$2,447
5450-0283	Light Whelen Pioneer Plus model PFP2 12V powder coated black with internal top raise pole mount. Includes switch accessible to driver. Location: [#LOC].	$2,212
5450-0284	Light Whelen 150W/120V with portable base powder coated black. Requires 110V receptacle. Location(s): [#LOC].	$2,296
5450-0285	Floodlight Whelen PFP2AC 110V with external mount custom length tripod telepole. Requires 110V receptacle. Location(s): [#LOC].	$3,077
5450-0286	Light Whelen Pioneer model PCP2 12V with external bottom raise pole mount. Includes switch accessible to driver. Location(s) [#LOC].	$2,447
5450-0287	Light Whelen 12 volt Pioneer Plus model PFP1 with brow mount (EA) powder coated black. Includes switch in cab (driver and officer side facing lights switched separately). Location(s): [#LOC].	$1,527
5450-0288	Light Whelen Pioneer Plus model PFP1 powder coated black with bail mount. Includes switch in cab accessible to driver (side facing lights switched seperately). Location(s): [#LOC].	$1,309
5450-0289	Light Whelen Pioneer model PFP1 12V with external bottom raise custom length pole. Includes switch accessible to driver. Location(s): [#LOC].	$1,702
5450-0290	Light Whelen Pioneer model PFP1 12V with internal top raise pole mount. Includes switch accessible to driver. Location: [#LOC].	$1,642
5450-0292	Light FireTech model FT-SL-15-110-W 120V with internal top raise pole mount (ROM model KR-900-I) pre-assembled from vendor. Location: [#LOC].	$2,386
5450-0294	Light Whelen Pioneer Max model PCP3 12V with Whelen external bottom raise pole mount. Includes switch accessible to driver. Location(s): [#LOC].	$2,790
5450-0295	LED scene light ExtendaLite 220W/12V model ELSS-XLDC-PS-SM2-UI-SW with telescopic external push-up pole. Includes switch accessible to driver in cab. Location(s): [#LOC].	$2,158
5450-0296	Fire Research Evolution 12V LED scene light model FCA570-V15 without pole. Includes switch in cab accessible to driver. Location: [#LOC].	$1,904
5450-0297	Light Fire Research Spectra LED 110V model SPA700-K20 with portable mount. Requires 110V receptacle. Location(s): [#LOC].	$2,273
5450-0298	Light Whelen Pioneer Plus model PFP1 with recess mount with painted stainless steel box. Includes switch accessible to driver (side facing lights switched separately). Location(s): [#LOC].	$1,508
5450-0299	Light Whelen Pioneer Plus model PFP1AC 120V with brow mount (EA) powder coated black. Location(s): [#LOC].	$1,546

5450-0300	Light Whelen Pioneer Plus model PFP2AC 120V with recess mount. Locate [#LOC]. Includes diamond plate mounting box for recess mount.	$2,680
5450-0301	Light Fire Research Spectra 120V LED model SPA656-K20-ON-SPA603 with 28" telescopic tripod pole. Location(s): [#LOC].	$3,102
5450-0302	Light Fire Research Spectra 120V LED model SPA642-K20-ON-SPA603 with 16" telescopic tripod pole. Location(s): [#LOC].	$3,102
5450-0303	Light Whelen Pioneer model PFP2AC 120V with external top raise pole mount. Location(s): [#LOC].	$2,546
5450-0304	Light Whelen Pioneer Plus model PFP2 12V with bail mount. Includes switch in cab accessible to driver (side facing lights switched seperately). Location(s): [#LOC].	$1,958
5450-0305	Akron SceneStar 12V LED model ELSS-SLDC-PU-UI-TL. Location: [#LOC].	$1,846
5450-0306	Light Whelen Pioneer Plus model PCP2AFSP 120VAC flood/spot with pedestal mount. Location(s): [#LOC].	$2,477
5450-0307	Light Whelen Pioneer Plus 12V model PCP2 flood/spot with pedestal mount powder coated black. Includes switch in cab (driver and officer side facing lights switched separately). Location(s): [#LOC].	$2,233
5450-0309	Light Whelen Pioneer Plus 12V model PFP2 flood with pedestal mount. Includes switch in cab (driver and officer side facing lights switched separately). Location(s): [#LOC].	$2,175
5450-0310	Fire Research Spectra 120V LED model SPA260-K15 with surface mount and diamond plate mounting box. Location: [#LOC].	$2,347
5450-0311	Light Whelen Pioneer Plus model PCP2 flood/spot with Quest brow mount (EA). Includes switch in cab (driver and officer side facing lights switched separately). Location(s): [#LOC].	$2,237
5450-0312	Quartz light Fire Research Optimum 1000W/240V model OPA530-M12-SR-SW-ON with external push up pole. Location(s): [#LOC].	$1,466
5450-0313	FireTech 11" 12V double stack brow light. Includes switch in cab (driver and officer side facing lights switched separately). Location: [#LOC]	$1,253
5450-0314	FireTech 11" 12V double stack bracket mounted light. Includes switch in cab (driver and officer side facing lights switched separately). Location: [#LOC]	$1,253
5450-0315	Quartz light Fire Research Optimum 750W/110V model OPA642-S75-ON-603 with 16.625" telescopic tripod pole. Location(s): [#LOC].	$1,587
5450-0316	Light Whelen Pioneer model PFP1 12V with PBA103 recess mount in painted smooth plate boxes. Includes switch accessible to driver (driver and officer side facing lights switched separately). Location: [#LOC].	$1,522
5450-0317	Quartz light Fire Research Focus 1000W/120V model FCA530-M10-CL50-SR-SW-ON with external push up pole. Location(s): [#LOC].	$1,655
5450-0318	Fire Research Spectra Max 12V LED model SPA260-Q20 with surface mount. Includes switch accessible to driver. Location: [#LOC].	$2,013
5450-0319	Akron SceneStar 12V LED model ELSS-XLDC-SM2-PS-UI-TL. Includes switch accessible to driver. Location: [#LOC].	$2,195
5450-0320	Light Whelen Pioneer Plus model PFP1 12V powder coated black with recess mount. Includes switch accessible to driver (side facing lights switched separately). Location(s): [#LOC].	$1,309
5450-0322	Light Fire Research Spectra Max 120V LED model SPA642-K28-ON-SPA603 with 16" telescopic tripod pole. Location(s): [#LOC].	$3,102
5450-0323	Light Whelen Pioneer Plus model PFP2AC 120V powder coated black with recess mount. Location(s): [#LOC].	$2,518
5450-0324	Light Whelen Pioneer model PCP2 powder coated black with PBA203 recess mount in fabricated diamond plate boxes. Includes switch in cab (driver and officer side facing lights switched separately). Location: [#LOC].	$2,320
5450-0325	Light Whelen Pioneer model PCP2 with chrome surface mount. Includes switch in cab accessible to driver (driver and officer side facing lights switched separately). Location: [#LOC].	$1,907
5450-0326	Fire Research Spectra 12V LED model SPA260-Q15 with surface mount and diamond plate mounting box. Location: [#LOC].	$1,980
5450-0327	Light Whelen Pioneer model PFP2AC 120V with internal bottom raise pole mount. Location: [#LOC].	$2,487
5450-0328	Federal Signal Commander 12V LED scene light model COMLC15K-510E-SW with internal pull-up pole. Includes switch accessible to driver. Location: [#LOC].	$2,249
5450-0329	Fire Research Spectra 120V LED model SPA260-K15 with surface mount and smooth plate painted mounting box. Location: [#LOC].	$2,449
5450-0330	Diamond plate mounting boxes (4). For use with scene lights and warning lights. Locate on driver side forward and rearward compartment tops outboard; boxes to be full depth of compartment top. Officer side forward and rearward upper body corners.	$840
5450-0331	Quartz light Fire Research Focus 500W/110V model FCA802-S50-01 with brow mount (EA). Location(s): [#LOC].	$865
5450-0332	Light Whelen Pioneer model PFP2AC 120V powder coated black with external bottom raise pole mount. Location(s): [#LOC].	$2,546
5450-0333	Quartz light KwikRaze 1500W/220V model KR-93D-I-NCW with internal telepole. Location(s): [#LOC].	$902
5450-0334	Akron SceneStar 120V LED model ELSS-XLAC-RM recess mount. Location: [#LOC].	$1,845
5450-0335	LED light SceneStar 220W/12V model ELSS-XLDC-BL. Includeds switch accessible to driver. Location(s): [#LOC].	$2,013
5450-0336	Quartz light Fire Research Focus 500W/120V model FCA300U-S50 with brow mount. Location: Center of cab brow.	$888
5450-0337	FireTech 35" 12V mini brow light. Includes switch in cab (driver and officer side facing lights switched separately). Location: [#LOC]	$1,865

5450-0339	FireTech 46" 12V brow light with black housing. Includes switch accessible to driver (driver and officer side facing lights switched separately). Location: [#LOC]	$2,198
5450-0340	Extended brow light brackets for use with FireTech front brow light with standard cab trough.	$242
5450-0343	Light Whelen 12V Pioneer model PFP2 powder coated black with PBA203 recess mount. Includes switch accessible to driver (side facing lights switched separately). Location: [#LOC].	$2,109
5450-0344	Light Whelen Slimline Pioneer Plus model PSL2 12V with recess mount. Includes switch in cab accessible to driver (side facing lights switched seperately). Location: [#LOC].	$1,237
5450-0347	Quartz light Fire Research Optimum 750W/110V portable model OPA700-S75-OP703 powder coated black. Location(s): [#LOC].	$879
5450-0348	Light Whelen Slimline Pioneer Plus model PSL2 12V with pedestal mount. Includes switch in cab accessible to driver (side facing lights switched seperately). Location: [#LOC].	$1,296
5450-0349	Floodlight Whelen PFP2AC 110V powder coated black with external mount 50" tripod telepole. Requires 110V receptacle. Location(s): [#LOC].	$3,077
5450-0350	Light Whelen Pioneer model PFP1AC 120V with external bottom raise pole mount. Location(s): [#LOC].	$2,122
5450-0351	Light Whelen Pioneer model PCP2 with PBA203 recess mount in smooth plate mounting boxes painted job (2-tone if applicable) color. Includes switch in cab (driver and officer side facing lights switched separately). Location: [#LOC].	$2,358
5450-0353	Light Fire Research Spectra 12V LED model SPA850-Q20 with flat mount. Location: [#LOC].	$2,291
5450-0354	Fire Research Spectra 120V LED model SPA260-K20 with surface mount. Location: [#LOC].	$2,373
5450-0355	Fire Research Spectra 120V LED scene light model SPA540-K20-CL-SW-H powder coated black with external pull-up pole. Location: [#LOC].	$2,732
5460-0000	Light tower Night Scan Powerlite NS3.0-3000M with four 750 watt 115 volt MagnaFire quartz light heads. Requires air brakes or air system and auxiliary air tank. Tower to be located [#LOC].	$21,475
5460-0001	Night Scan Powerlite NS3.0-4500M light tower with six 750 watt 115 volt MagnaFire quartz light heads. Control to be located next to the breaker box. Requires air brakes or air system and auxiliary air tank. Tower to be located [#LOC].	$23,402
5460-0002	Night Scan Powerlite NS4.5-3000M light tower with four 750 watt 115 volt MagnaFire quartz light heads. Control to be located next to the breaker box. Requires air brakes or air system and auxiliary air tank. Tower to be located [#LOC].	$22,074
5460-0003	Night Scan Powerlite NS4.5-4500M light tower with six 750 watt 115 volt MagnaFire quartz light heads. Control to be located next to the breaker box. Requires air brakes or air system and auxiliary air tank. Tower to be located [#LOC].	$23,777
5460-0004	Night Scan Powerlite NS4.5-6000A light tower with four 1500 watt 220 volt quartz light heads. Control to be located next to the breaker box. Requires air brakes or air system and auxiliary air tank. Tower to be located [#LOC].	$20,821
5460-0005	Night Scan Powerlite NS4.5-6000OPT light tower with four 1500 watt 230 volt Optimum quartz light heads. Control to be located next to the breaker box. Requires air brakes or air system and auxiliary air tank. Tower to be located [#LOC].	$20,540
5460-0006	Night Scan Powerlite NS4.5-9000OPT light tower with six 1500 watt 230 volt Optimum quartz light heads. Control to be located next to the breaker box. Requires air brakes or air system and auxiliary air tank. Tower to be located [#LOC].	$25,710
5460-0010	Will-Burt Night Scan extension harness. Required when tower is installed on custom cab roof or more than 20' from controller location.	$1,057
5460-0011	Night Scan Chief NS1.8-3000A light tower with two 1500 watt 230 volt quartz light heads. Control to be located next to the breaker box. Tower to be located [#LOC].	$12,659
5460-0013	Command Light light tower model CL 605. Includes (6) 500 watt quartz halogen lights and a green strobe. Location: [#LOC].	$20,096
5460-0014	Command Light light tower model CL 610. Includes (6) 650 watt quartz halogen lights and a green strobe. Location: [#LOC].	$18,004
5460-0019	Command Light light tower model CL 611. Includes (6) 1000 watt quartz halogen lights and a green strobe. Location: [#LOC].	$19,404
5460-0021	Command Light light tower model CL 615. Includes (6) 1500 watt quartz halogen lights and a green strobe. Location: [#LOC].	$19,404
5460-0022	Command Light Knight tower model KL450. Includes (6) 500 watt quartz halogen lights and a green strobe. Location: [#LOC].	$13,236
5460-0024	Command Light light tower model SL429-RT. Includes (2) 1500 watt quartz halogen lights. Control to be located next to the breaker box. Location: [#LOC].	$8,536
5460-0025	Night Scan Powerlite NS4.5-5400M light tower with six 900 watt 230 volt MagnaFire quartz light heads. Control to be located next to the breaker box. Requires air brakes or air system and auxiliary air tank. Tower to be located [#LOC].	$22,324
5460-0026	Night Scan Chief NS1.8-3000A light tower with two 1500 watt 230 volt quartz light heads. Control to be located next to the breaker box. Tower to be located [#LOC].	$12,659
5460-0027	Command Light tower option, back lighting.	$1,985
5460-0030	Command Light light tower model KL475HS. Includes (6) 750 watt Magnafire quartz halogen lights and a green strobe. Location: [#LOC].	$16,337
5460-0031	Night Scan Chief NS1.8-3000M light tower with four 750 watt 115 volt MagnaFire quartz light heads. Control to be located next to the breaker box. Tower to be located [#LOC].	$13,912
5460-0032	Command Light light tower model KL475HS. Includes (6) 750 watt Magnafire quartz halogen lights and a red strobe. Location: [#LOC].	$16,337
5460-0033	Night Scan Powerlite NS4.5-3600M light tower with four 900 watt 230 volt MagnaFire quartz light heads. Control to be located next to the breaker box. Requires air brakes or air system and auxiliary air tank. Tower to be located [#LOC].	$19,715

5460-0034	Command Light light tower model CL 615. Includes (4) 1500 watt quartz halogen lights, (2) 1000 watt Metal Halide light heads, and a green strobe. Locate [#LOC].	$20,522
5460-0036	Night Scan Chief NS2.3-3000M light tower with four 750 watt 115 volt MagnaFire quartz light heads. Control to be located next to the breaker box. Tower to be located [#LOC].	$13,080
5460-0038	Command Light light tower model CL 615. Includes (6) 1000 watt quartz halogen lights and a green strobe. Location: [#LOC].	$19,404
5460-0040	Night Scan Powerlite NS4.5-6000OPT light tower with four 1500 watt 230 volt Optimum quartz light heads. Light heads and base covers painted job color. Control to be located next to the breaker box. Requires air brakes or air system and auxiliary air tank. Tower to be located [#LOC].	$23,589
5460-0043	Night Scan Powerlite NS3.0-6000OPT light tower with four 1500 watt 230 volt Optimum quartz light heads. Control to be located next to the breaker box. Requires air brakes or air system and auxiliary air tank. Tower to be located [#LOC].	$23,402
5460-0045	Night Scan Powerlite NS4.5-3000M light tower with four 750 watt 115 volt MagnaFire quartz light heads. Control to be located next to the breaker box. Requires air brakes or air system and auxiliary air tank. Tower to be located [#LOC].	$21,700
5460-0046	Command Light light tower model KL450. Includes black powder coat finish with (6) 500 watt quartz halogen lights and a green strobe. Location: [#LOC].	$14,474
5460-0047	Night Scan Chief NS2.3-6000OPT light tower with four 1500 watt 230 volt FRC Optimum quartz light heads. Control to be located next to the breaker box. Tower to be located [#LOC].	$13,090
5460-0048	Command Light light tower model CL 615 with FRC Optimum lightheads. Includes (6) 1500 watt quartz halogen lights and an amber strobe. Location: [#LOC].	$24,141
5460-0050	Night Scan Powerlite NS 3.0-3600M light tower with four 900 watt 230 volt MagnaFire quartz light heads. Control to be located next to the breaker box. Requires air brakes or air system and auxiliary air tank. Tower to be located [#LOC].	$19,221
5460-0053	Command Light light tower model CL602A with Whelen PFP2AC lightheads. Includes (6) 150 watt LED lights and an amber strobe. Location: [#LOC].	$31,974
5460-0059	Command Light Knight tower model KL465. Includes (6) 650 watt quartz halogen lights. Location: [#LOC].	$13,236
5460-0064	Night Scan Chief NS1.8-6000OPT light tower with four 1500 watt 230 volt FRC Optimum quartz light heads. Control to be located next to the breaker box. Requires air brakes or air system and auxiliary air tank. Tower to be located [#LOC].	$13,599
5460-0065	Night Scan Chief 1.8-3600M light tower with four 900 watt 230 volt quartz light heads. Control to be located next to the breaker box. Tower to be located [#LOC].	$15,227
5460-0066	Command Light light tower model CL602D with Whelen PFP2 12V lightheads. Includes (4) 150 watt LED lights and a amber strobe. Location: [#LOC].	$26,512
5460-0067	Night Scan Chief NS2.3-600LED Whelen light tower with (4) 150 watt 12V Whelen Pioneer PFP2 LED light heads. Control to be located next to the breaker box if equipped or the forward wall of L1 if unit has no breaker box. Tower to be located [#LOC].	$16,726
5460-0069	Command Light Knight tower model KL450. Includes (6) 500 watt quartz halogen lights and a amber strobe. Location: [#LOC].	$13,236
5460-0070	Night Scan Chief NS1.8-3000-4-MGN-110v light tower with four 750 watt 115 volt MagnaFire quartz light heads. Control to be located next to the breaker box. Tower to be located [#LOC].	$10,780
5460-0071	Night Scan Powerlite NS3.0-600WHL light tower with (4) 150 watt 120 volt Whelen Pioneer PFP2AC LED light heads. Control to be located next to the breaker box. Requires air brakes or air system and auxiliary air tank. Ahead of vista location requires riser. Tower to be located [#LOC].	$29,395
5460-0072	Night Scan Powerlite NS3.0-900WHL light tower with (6) 150 watt 120 volt Whelen Pioneer PFP2AC LED light heads. Control to be located next to the breaker box. Requires air brakes or air system and auxiliary air tank. Ahead of vista location requires riser. Tower to be located [#LOC].	$34,771
5460-0073	Night Scan Chief NS1.8-600WHL 120V Whelen light tower with (4) 150 watt 120 volt Whelen Pioneer PFP2AC LED light heads. Control to be located next to the breaker box. Tower to be located [#LOC].	$24,658
5460-0074	Night Scan Chief NS1.8-600 Whelen light tower with (4) 150 watt 12V Whelen Pioneer PFP2 LED light heads. Control to be located next to the breaker box. Tower to be located [#LOC].	$16,866
5460-0075	Night Scan Powerlite NS4.5-900WHL light tower with (6) 150 watt 120 volt Whelen Pioneer PFP2AC LED light heads. Control to be located next to the breaker box. Requires air brakes or air system and auxiliary air tank. Tower to be located [#LOC].	$35,585
5460-0076	Night Scan Powerlite NS4.5-600WHL light tower with (4) 150 watt 120 volt Whelen Pioneer PFP2AC LED light heads. Control to be located next to the breaker box. Requires air brakes or air system and auxiliary air tank. Tower to be located [#LOC].	$30,125
5460-0077	Night Scan Chief NS2.3-600LED Whelen light tower with (4) 150 watt 110V Whelen Pioneer PFP2AC LED light heads. Control to be located next to the breaker box. Tower to be located [#LOC].	$24,903
5460-0080	Night Scan Chief NS2.3-920SPA 12V FRC light tower with (4) 230 watt 12 volt FRC Spectra LED light heads. Control to be located next to the breaker box. Tower to be located [#LOC].	$22,442
5460-0081	Night Scan Chief NS2.3-920SPA 120V FRC light tower with (4) 230 watt 120 volt FRC Spectra LED light heads. Control to be located next to the breaker box. Tower to be located [#LOC].	$22,442
5460-0082	Night Scan Powerlite NS3.0-920SPA light tower with (4) 230 watt 120 volt FRC Spectra LED light heads. Control to be located next to the breaker box. Requires air brakes or air system and auxiliary air tank. Ahead of vista location requires riser. Tower to be located [#LOC].	$34,907
5460-0083	Night Scan Powerlite NS3.0-1380SPA light tower with (6) 230 watt, 120 volt FRC Spectra LED light heads. Control to be located next to the breaker box. Requires air brakes or air system and auxiliary air tank. Ahead of vista location requires riser. Tower to be located [#LOC].	$40,103

5460-0085	Night Scan Powerlite NS4.5-1380SPA light tower with (6) 230 watt 120 volt FRC Spectra LED light heads. Control to be located next to the breaker box. Requires air brakes or air system and auxiliary air tank. Tower to be located [#LOC].	$40,374
5460-0086	Command Light light tower model CL 607. Includes (6) 750 watt ROM Magnafire quartz halogen lights and a green strobe. Location: [#LOC].	$24,294
5460-0087	Command Light light tower model CL 607. Includes (6) 750 watt FRC Optimum quartz halogen lights and a green strobe. Location: [#LOC].	$24,294
5460-0088	Command Light light tower model CL602A with Whelen PFP2AC lightheads. Includes (4) 150 watt LED lights. Location: [#LOC].	$30,873
5460-0089	Command Light light tower model CL602A with FRC 120V Spectra lightheads. Includes (4) 220 watt LED lights. Location: [#LOC].	$30,873
5460-0090	Command Light light tower model CL602A with FRC 120V Spectra lightheads. Includes (6) 220 watt LED lights. Location: [#LOC].	$31,974
5460-0091	Command Light light tower model CL602D with FRC Spectra 12V lightheads. Includes (4) 220 watt LED lights. Location: [#LOC].	$26,512
5460-0092	Command Light light tower model KL475OPT. Includes (6) 750 watt FRC Optimum quartz halogen lights. Location: [#LOC].	$16,023
5460-0093	Command Light light tower model KL415A. Includes (6) 220 watt 120V FRC Spectra LED lights. Control to be located adjacent to breaker box. Location: [#LOC].	$29,721
5460-0094	Command Light light tower model KL415A. Includes (6) 150 watt 120V Whelen Pioneer PFP2 LED lights. Control to be located adjacent to breaker box. Location: [#LOC].	$29,721
5460-0095	Command Light light tower model KL415A. Includes (4) 220 watt 120V FRC Spectra LED lights. Control to be located adjacent to breaker box. Location: [#LOC].	$24,295
5460-0096	Command Light light tower model KL415A. Includes (4) 150 watt 120V Whelen Pioneer PFP2 LED lights. Control to be located adjacent to breaker box. Location: [#LOC].	$24,295
5460-0097	Command Light light tower model KL415D. Includes (4) 220 watt 12V FRC Spectra LED lights. Control to be located adjacent to breaker box. Location: [#LOC].	$22,939
5460-0098	Command Light light tower model KL415D. Includes (4) 150 watt 12V Whelen Pioneer PFP2 LED lights. Control to be located adjacent to breaker box if equipped or L1 forward wall in available space if not otherwise specified. Location: [#LOC].	$22,939
5460-0100	Command Light light tower model SL422D. Includes (2) 150 watt Whelen 12V Pioneer lights. Control to be located next to the breaker box. Location: [#LOC].	$11,816
5460-0101	Command Light light tower model CL602A-2MH. Includes (4) 110V 220 watt FRC Spectra LED lights and (2) 230V 1000W metal halide lights. Location: [#LOC].	$33,586
5460-0102	Night Scan Chief NS1.8-3000OPT light tower with four 750 watt FRC Optimum quartz light heads. Control to be located next to the breaker box. Tower to be located on [#LOC].	$13,377
5460-0103	Night Scan Powerlite NS3.0-900WHL light tower with (6) 150 watt 120 volt Whelen Pioneer PFP2AC LED light heads. Control to be located next to the breaker box. Requires air brakes or air system and auxiliary air tank. Tower to be located rearward on flat roof (non vista) and mounted side to side and hinged to driver. Placement to allow 45 degree shield to be placed in normal vista rise locations to allow cab to appear to have vista roof.	$34,771
5460-0106	Strobe light for Command Light tower. Color: [#COL].	$341
5460-0111	Command Light light tower model CL 609. Includes (6) 900 watt ROM Magnafire quartz halogen lights and a green strobe. Location: [#LOC].	$24,532
5460-0113	Command Light light tower model KL475. Includes (6) 750 watt Magnafire quartz halogen lights. Location: [#LOC].	$16,023
5460-0114	Night Scan Chief NS1.8-300LED Whelen light tower with (2) 150 watt 12 volt Whelen Pioneer PFP2 LED light heads. Control to be located adjacent to breaker box. Tower to be located [#LOC].	$13,331
5460-0116	Night Scan Powerlite NS4.5-2100SPA light tower with (6) 350 watt 120 volt FRC Spectra LED light heads. Control to be located next to the breaker box. Requires air brakes or air system and auxiliary air tank. Tower to be located [#LOC].	$41,482
5460-0118	Command Light light tower model SL447-RT. Includes (4) 750 watt 120V FRC Optimum quartz halogen lights. Control to be located next to the breaker box. Location: [#LOC].	$10,144
5470-0000	Receptacle twist lock 15A/110V 3 wire NEMA L5-15 with cover plate. Location: [#LOC].	$299
5470-0001	Receptacle twist lock 20A/110V 3 wire NEMA L5-20 with cover plate. Location: [#LOC].	$312
5470-0002	Receptacle twist lock 30A/110V 3 wire NEMA L5-30 with cover plate. Location: [#LOC].	$337
5470-0004	Receptacle household 20A/110V duplex 3-prong NEMA 5-20 with cover plate interior mounted wired to inlet receptacle. Location: [#LOC].	$295
5470-0005	Receptacle household 15A/110V Daniel Woodhead duplex 3 wire NEMA 5-15 w/Daniel Woodhead cover plate. Location: [#LOC]	$544
5470-0006	Receptacle twist lock 15A/110V Daniel Woodhead 3 wire NEMA L5-15 w/Daniel Woodhead cover plate. Location: [#LOC]	$489
5470-0007	Receptacle twist lock 15A/220V Daniel Woodhead 3 wire NEMA L6-15 w/Daniel Woodhead cover plate. Location: [#LOC]	$618
5470-0008	Receptacle twist lock 20A/110V Daniel Woodhead 3 wire NEMA L5-20 w/Daniel Woodhead cover plate. Location: [#LOC].	$503
5470-0009	Receptacle twist lock 20A/220V Daniel Woodhead 3 wire NEMA L6-20 w/Daniel Woodhead cover plate. Location: [#LOC]	$666
5470-0010	Receptacle twist lock 20A 110V/220V Daniel Woodhead 4 wire NEMA L14-20 w/Daniel Woodhead cover plate. Location: [#LOC]	$690
5470-0011	Receptacle twist lock 15A/220V 3 wire NEMA L6-15 with cover plate. Location: [#LOC]	$435
5470-0012	Receptacle twist lock 20A/220V 3 wire NEMA L6-20 with cover plate. Location: [#LOC].	$435
5470-0013	Receptacle twist lock 20A 110V/220V 4 wire NEMA L14-20 with cover plate. Location: [#LOC].	$592
5470-0014	Receptacle twist lock 30A/220V 3 wire NEMA L6-30 with cover plate. Location: [#LOC].	$592

5470-0015	Receptacle twist lock 30A 110V/220V 4 wire NEMA L14-30 with cover plate. Location: [#LOC]	$588
5470-0016	Receptacle shoreline 30A/110V with auto transfer switch. The receptacle shall be located [#LOC].	$1,003
5470-0017	Receptacle household 20A/110V duplex 3-prong NEMA 5-20 with cover plate. Location: [#LOC].	$285
5470-0018	Receptacle shoreline 50A/220V with auto transfer switch. The receptacle shall be located [#LOC].	$1,013
5470-0019	Receptacle FirePower 20A/110V model FP-11 with cover plate. Location: [#LOC].	$345
5470-0020	Receptacle 12V military with A pin Positive, B pin Negative, C pin Blank. Location: [#LOC]	$236
5470-0021	12 volt power point wired battery hot. Location [#LOC]	$58
5470-0024	Receptacle 15A/110V duplex with (1) 3-prong NEMA 5-15 and (1) twist lock NEMA L5-15 with cover plate. Location: [#LOC].	$319
5470-0025	Receptacle household 30A/110V 3-prong NEMA 5-30 with cover plate. Location: [#LOC]	$326
5470-0026	Receptacle household 15A/110V duplex 3-prong NEMA 5-15 with cover plate interior mounted wired to inlet receptacle. Location: [#LOC].	$273
5470-0027	Household switch with weaterproof cover located near receptacle at [#LOC]. Switch to operate single leg of this duplex receptacle.	$492
5470-0028	Receptacle household 20A/110V Daniel Woodhead duplex 3 wire NEMA 5-20 w/Daniel Woodhead cover plate. Location: [#LOC].	$559
5470-0029	Receptacle Hubbell twist lock 20A 110V/250V 3 wire NON-NEMA with cover plate. Location: [#LOC].	$372
5470-0030	Receptacle twist lock 15A/110V 3 wire NEMA L5-15 with yellow Daniel Woodhead cover plate. Location: [#LOC].	$365
5470-0031	Receptacle twist lock 15A/110V duplex 3 wire NEMA L5-15 with yellow Daniel Woodhead cover plate. Location: [#LOC]. Top duplex will be hooked to toogle switch next to it.	$618
5470-0032	Receptacle 12V Marinco model 2018BR with model 2018MB cover wired battery hot. Includes model 2018BP male connector. Location: [#LOC].	$413
5470-0034	Receptacle shoreline 50A/220V. The receptacle shall be located [#LOC]. No additional breaker box is included in this code.	$272
5470-0036	9 outlet Stanley model 31610 household 15A/110V power strip wired to inlet receptacle. Location: [#LOC].	$178
5470-0039	Receptacle NON-NEMA locking 20A 120V/250V Daniel Woodhead model 67W08 w/Daniel Woodhead cover plate. Location: [#LOC].	$690
5470-0040	Receptacle twist lock 50A/220V 3 wire NEMA L6-50 with cover plate. Location: [#LOC].	$721
5470-0042	Auto-Eject receptacle inlet 30 amp 120 volt with auto transfer switch. The receptacle shall be located [#LOC] and with a [#COL] cover.	$1,459
5470-0048	Service 30A/220V 4 wire with junction box. Location: [#LOC].	$458
5470-0049	Receptacle household 15A/110V double gang (four outlets) 3-prong NEMA 5-15 with cover plate interior mounted wired to inlet receptacle. Location:[#LOC].	$544
5470-0051	6 outlet household 20A/110V power strip wired to inlet receptacle. Location: [#LOC].	$205
5470-0053	Receptacle inlet 110 VAC, L5-30 Amp twist lock with a [#COL] cover. Location: [#LOC].	$274
5470-0054	Receptacle household 15A/110V duplex 3-prong NEMA 5-15 with cover plate interior mounted wired to generator (not wired to inlet/shoreline). Location: [#LOC].	$273
5470-0055	Receptacle household 15A/110V duplex 3-prong NEMA 5-15 with cover plate. This receptacle shall be GFCI protected and have a push button reset on the receptacle. Location: [#LOC].	$297
5470-0057	Receptacle household 20A/110V duplex 3-prong NEMA 5-20 with cover plate interior mounted wired to generator (not wired to inlet/shoreline). Location: [#LOC].	$285
5470-0061	Grainger model 2MV42; 6 outlet household 15A/110V power strip wired to inlet receptacle. Location: [#LOC].	$321
5470-0066	12 volt power point wired battery hot. Location: in rear walkin body, on forward wall, above desk, driver side.	$58
5470-0067	12 volt power point wired battery hot. Location: Inside walkin body compartment DS2, low on back wall as far forward as posable. REF customer drawing	$58
5470-0068	12 volt power point wired battery hot. Location: Inside walkin body compartment OS2, low on back wall as far forward as posable. REF customer drawing	$58
5470-0071	Receptacle household 15A/110V duplex 3-prong NEMA 5-15 with cover plate interior mounted wired to inlet receptacle and shall include as part of the receptacle 15 amp over current protection. This receptacle shall be GFCI protected and have a push button reset on the receptacle. Location: [#LOC].	$323
5470-0072	Each receptacle shall be labeled to identify the power source (Shoreline, Generator).	$118
5470-0075	Receptacle household 30A/220V 3 wire NEMA 6-30 with cover plate. Location: [#LOC].	$592
5470-0076	Receptacle Hubbell twist lock 15A/110V 3 wire NEMA L5-15 with cover plate. Location: [#LOC].	$372
5470-0077	Receptacle Hubbell twist lock 20A/250V 4 wire NEMA L15-20 with cover plate. Location: [#LOC].	$372
5470-0080	Receptacle; Schuko 250V model 70310 with weatherproof cap. Location: [#LOC].	$435
5470-0081	Receptacle household 20A/110V duplex 3-prong NEMA 5-20 with cover plate exterior mounted wired to inlet receptacle. Location: [#LOC].	$295
5470-0082	Receptacle 20A/220V 3 wire NEMA 6-20 with cover plate wired to inlet receptacle. Location: [#LOC].	$435
5500-0003	Code3 V-con #3692 siren on cab dash.	$627
5500-0004	Code3 V-Con #3692 siren recessed mounted.	$723
5500-0005	Federal Signal electronic EQ2B-EF siren. Includes 200 watt speaker with square "E-ONE" grille. Speaker location: [#LOC].	$3,641
5500-0006	Federal electronic e-Q2B siren. Includes "Q" grille. Speaker location: [#LOC].	$4,127
5500-0007	Federal MS4000 siren recessed mounted.	$821
5500-0009	Federal PA300 electronic siren recessed mounted.	$679
5500-0010	Federal Q2B siren - flush mounted in bumper. Location: [#LOC].	$2,901
5500-0011	Federal Q2B siren - Pedestal mounted on bumper. Location: [#LOC].	$2,613

5500-0012	Prewire for Federal Q2B mechanincal siren.	$271
5500-0014	Unitrol #480K siren.	$1,547
5500-0015	Whelen model 295SLSA1 siren with microphone (replaced 295HFSA1).	$900
5500-0016	Code 3 V-Con #3672 siren recessed mounted.	$723
5500-0017	Whelen model 295HFSM1 siren with mechanical siren tone and microphone. N/A in California.	$990
5500-0019	Code 3 #3997 siren. Requires (1) 200 watt or (2) 100 watt speakers.	$1,661
5500-0020	Federal PA4000 siren recessed mounted.	$724
5500-0022	Federal PA300 siren mounted on electrical access panel between the driver and officer front seats.	$679
5500-0027	Signal Vehicle Products model SS741MG siren recessed mounted.	$571
5500-0028	Integrated Siren System with dual control heads, separate PA controls with remote mircrophone and volume switch.	$830
5500-0030	Code 3 #3997R siren. Requires (1) 200 watt or (2) 100 watt speakers.	$1,661
5500-0031	Whelen model 295HFSA7 siren with microphone.	$1,408
5500-0032	Federal / Unitrol #U480K-4 siren.	$1,492
5500-0034	Federal Rumbler secondary siren. Includes amp, timer, and two speakers mounted under vehicle. Requires control switch.	$1,188
5500-0036	Whelen model 295HFSC9 siren with microphone. N/A in California.	$1,131
5500-0037	Federal PA300 siren recessed mounted. Microphone to be removed and a plug is to be installed in the wiring hole.	$679
5500-0038	Federal / Unitrol #UTM4 siren.	$1,508
5500-0040	Powercall DX5200 siren control. For use with (1) 200 watt speaker or up to (2) 100W speakers.	$905
5500-0041	Federal electronic Q2B-EF siren. Includes two (2) ES100 speakers with square "E-ONE" grilles. Speaker location: [#LOC].	$3,767
5500-0044	Whelen model 295HFSA7 siren with microphone. Microphone to be removed (shipped loose) and a plug is to be installed in the wiring hole.	$1,408
5500-0045	Whelen model 295SLSC1 siren with plug-in microphone. N/A in California.	$900
5500-0048	Federal PA300 100W siren recessed mounted.	$636
5500-0049	Whelen Howler secondary siren. Includes amp, timer, and two speakers mounted under vehicle.	$1,202
5500-0050	Integrated Siren System with dual control heads. No microphone or volume control.	$830
5500-0051	Federal PA300R siren with single control. PA control and volume switch located on electrical access panel.	$816
5500-0052	Federal PA640 electronic siren recessed mounted.	$679
5500-0054	Federal / Unitrol #UTM1 siren.	$1,090
5500-0059	Whelen model 295SL100 siren with microphone (replaced 295HF100).	$850
5500-0060	Whelen Howler secondary siren. Includes amp, timer, and two speakers mounted under gravelshield.	$1,202
5500-0063	Federal electronic Q2B-EF siren. Includes two ES100 speakers with square "EF" grilles. Speaker location: [#LOC].	$3,767
5500-0066	Whelen model 295SLSA1 siren without microphone.	$900
5500-0067	Whelen model 295SLSC1 siren without microphone. N/A in California.	$900
5500-0068	Pre-wire for Tomar Emitter. Coil 4' of wire in driver's overhead panel.	$271
5500-0069	Prewire for Federal Q2B mechanincal siren. Officer side front bumper.	$271
5500-0070	Federal Signal electronic EQ2B-EF siren. Includes 200 watt speaker with "EF" grille. Speaker location: [#LOC].	$3,641
5500-0072	Powercall X71 siren control. For use with (1) 100W speaker. Locate switch on officer side switch panel.	$573
5500-0074	Whelen model 295HFS2 siren with flush mount siren head, remote amplifier and microphone. N/A in California.	$1,036
5500-0075	Carson SA-400M siren recessed mounted.	$1,117
5500-0076	Federal Q2B siren - flush mounted in bumper. Incudes diamond plate housing for siren to space outward to clear in bumper options. Location: center front bumper.	$3,078
5510-0002	Speaker Federal BP200 mounted through bumper. Location: [#LOC].	$1,136
5510-0003	Speaker Federal CP100S pedestal mounted. Location: [#LOC].	$742
5510-0006	Speaker Federal ES100-MSBMT. Location: [#LOC].	$441
5510-0007	Speaker Cast Products SA2401 100W thru bumper. Location: [#LOC].	$496
5510-0008	Speaker Cast Products SA3501 100W through bumper. Location: [#LOC].	$549
5510-0009	Federal TS100-N speaker mounted on pump panel.	$448
5510-0012	Speaker Federal TS100 through bumper with E-ONE grille. Location: [#LOC].	$526
5510-0013	Speaker Federal Dynamax MS100-EF thru bumper. Location: [#LOC].	$526
5510-0016	Code 3 PB100C electronic siren speaker recessed in front bumper. Location: [#LOC].	$516
5510-0017	Speaker Cast Products SA2403 100W thru bumper. Location: [#LOC].	$496
5510-0018	Whelen SA122FMP electronic siren speaker recessed in front bumper. Location: [#LOC].	$545
5510-0019	University Sound speaker model MIS8C with seperate on / off switch. Locate on driver side upper module area with wire terminating in the center overhead console.	$332
5510-0021	Speaker Federal TS100-N mounted on driver side front compartment face.	$448
5510-0023	Speaker Atkinson Dynamics (Federal) mounted on pump panel.	$604
5510-0026	Code 3 FM100C electronic siren speaker recessed in front bumper. Location: [#LOC].	$594
5510-0027	Speaker volume control on pump panel for pump panel mtd speaker. Locate next to speaker. Includes 16-18 gauge audio cable run from volume control to center overhead area, leave a 30" coil of wire.	$428
5510-0029	Speaker, Federal Signal Dynamax ES100 with "E-ONE" grille through bumper. Location: [#LOC].	$526
5510-0031	Whelen SA314P electronic siren speaker recessed in front bumper with polished trim ring. Location: [#LOC].	$734

5510-0041	Speaker, Federal Signal Dynamax ES100. Location: [#LOC].	$526
5510-0042	Speaker Atkinson Dynamics (Federal) model AD-SF-25 flush mounted with volume controls. Location: [#LOC].	$667
5510-0045	Speaker, Federal Signal Dynamax ES100 with "E-ONE" grille. Location: [#LOC].	$526
5510-0046	Speaker Federal BP100 mounted through bumper. Location: [#LOC].	$721
5510-0047	Speakers (Pair), Federal Signal Dynamax ES100 through bumper with smooth plate grille painted same color as the heavy duty bumper and sufficient surface area for lettering. Locate both speakers next to each other center of the bumper with one common grill covering them.	$1,246
5550-0006	Whelen LED 6/2/2 lower level warning light package. Includes (6) 600 series (2) 400 series and (2) 500 series light heads w/weatherproof connectors. Locate side facing lights: [#LOC].	$3,122
5550-0007	Whelen LED 8/2 lower level warning light package. Includes (8) 600 series and (2) 500 series light heads w/weatherproof connectors. Locate side facing lights: [#LOC].	$3,363
5550-0008	Whelen strobe/LED 6/2/2 lower level warning light package. Includes (6) 600 series strobes, (2) 400 series strobes and (2) 500 series LED light heads w/weatherproof connectors and required power supplies. Locate side facing lights: [#LOC].	$3,012
5550-0010	Whelen 600 series LED lower level warning light package. Includes (10) LED light heads w/weatherproof connectors. Locate side facing lights: [#LOC].	$3,699
5550-0012	Whelen 600 series strobe lower level warning light package. Includes (10) strobe lights w/weatherproof connectors and required power supplies. Locate side facing lights: [#LOC].	$3,480
5550-0013	Federal Signal strobe/halogen lower level warning light package. Includes (8) strobe, (2) GH1F halogen lts and required power supplies. Locate side facing lights: [#LOC].	$2,937
5550-0014	Federal Signal GS5 strobe lower level warning light package. Includes (10) Lights and required power supplies. Locate side facing lights: [#LOC].	$3,352
5550-0021	Federal Signal GL5 LED lower level warning light package. Includes Ten (10) GL5-R lights. Locate side facing lights: [#LOC].	$2,682
5550-0028	Code3 strobe/halogen 6/4 lower level warning light package. Includes (6) 40 series strobe lights and (4) OL135 halogen lights and required power supplies. Locate side facing lights: [#LOC].	$4,537
5550-0029	Code3 halogen 4/6 lower level warning light package. Includes Includes (6) 41 series and (4) OL135 halogen lights. Locate side facing lights: [#LOC].	$2,279
5550-0030	Code3 model 65 red LED lower level warning light package. Includes (10) LED lights. Locate side facing lights: [#LOC].	$3,908
5550-0049	Code3 LED 6/2/2 lower level warning light package. Includes (8) model 65 red LED and (2) LXEX1F-R LED lights. Includes chrome bezels where applicable. Locate side facing lights: [#LOC].	$3,092
5550-0052	Flash rate for Federal LED lower level warning lights to be set at pattern 2, (102 TFPM).	$87
5550-0053	Flash rate for Federal LED lower level warning lights to be set at pattern 8, (150 FPM).	$87
5550-0054	Whelen 600 series Super LED lower level warning light package. Includes (10) red LED light heads w/chrome flanges. Locate side facing lights: [#LOC].	$2,936
5550-0055	Federal Signal QuadraFlare LED lower level warning light package. Includes (10) QL64XF-R LED light heads with bezels. Locate side facing lights: [#LOC].	$2,455
5550-0059	Whelen Super LED lower level warning light package. Includes (8) red 600 LED light heads and (2) red 500 LED light heads w/chrome flanges. Locate side facing lights: [#LOC].	$2,774
5550-0067	Flash rate for Federal QuadraFlare LED lower level warning lights to be set at pattern 4, (75 QFPM).	$87
5550-0069	Flash rate for Federal QuadraFlare LED lower level warning lights to be set at pattern 5, (150 DFPM).	$87
5550-0072	Whelen 600 series Super LED lower level warning light package. Includes (8) red/amber and (2) red LED light heads w/chrome flanges. Locate side facing lights: [#LOC].	$3,310
5550-0073	Whelen Super LED lower level warning light package. Includes (8) 600 Super LED light heads and (2) 900 Super LED light heads w/chrome flanges where applicable. Locate side facing lights: [#LOC].	$3,231
5550-0091	Whelen strobe/LED 6/2/2 lower level warning light package. Includes (6) 600 series strobes, (2) 700 series strobes and (2) 500 series LED light heads w/weatherproof connectors and required power supplies. Locate side facing lights: [#LOC].	$3,079
5550-0092	Whelen strobe/LED 6/2/2 lower level warning light package. Includes (6) 600 series super LED, (2) 700 series split lens strobes and (2) 500 series super LED light heads w/weatherproof connectors and required power supplies. Locate side facing lights: [#LOC]	$3,512
5550-0093	Whelen Super LED lower level warning light package. Includes (6) 600 LED red light heads, (2) 400 LED red light heads and (2) 500 red LED light heads w/chrome flanges. Locate side facing lights: [#LOC]	$2,647
5550-0094	Federal Signal strobe lower level warning light package. Includes (8) GS5 strobes and (2) GS2 strobes lts. All lenses to be blue except mid-body which are red. Locate side facing lights: [#LOC]	$3,352
5550-0095	Whelen Super LED lower level warning light package. Includes (7) 600 red LED light heads, and (3) 600 blue LED light head w/chrome flanges. Locate side facing lights: [#LOC]	$2,936
5550-0096	Weldon Diamondback V46 LED lower level warning light package. Includes (10) red LED light heads w/chrome flanges. Locate side facing lights: [#LOC].	$2,982
5550-0097	Whelen 400 series linear Super LED lower level warning light package. Includes (10) red LED light heads w/chrome flanges. Locate side facing lights: [#LOC].	$4,490
5550-0099	Whelen Super LED lower level warning light package. Includes (4) red 600 LED light heads, (4) red/clear 600 split LED light heads and (2) red 500 LED light heads w/chrome flanges. Locate side facing lights: [#LOC].	$3,687
5550-0100	Whelen Super LED lower level warning light package. Includes (6) red 600 LED light heads and (4) red 500 LED light heads w/chrome flanges. Locate side facing lights: [#LOC].	$2,774

5550-0104	Whelen 600 series Super LED lower level warning light package. Includes (8) red and (2) red/white LED light heads w/chrome flanges. Locate side facing lights: [#LOC].	$3,425
5550-0106	Whelen Super LED lower level warning light package. Includes (6) 600 red LED light heads, (2) 400 amber LED light heads and (2) 500 red LED light heads w/chrome flanges. Locate side facing lights: [#LOC].	$2,647
5550-0107	Whelen Super LED lower level warning light package. Includes (8) red 600 LED light heads and (2) red 500 LED light heads w/chrome flanges. Locate side facing lights: [#LOC].	$2,774
5550-0109	Federal Signal QuadraFlare LED lower level warning light package. Includes (5) QL64XF-R LED light heads with bezels and (5) QL64XF-B LED light heads with bezels. Lights to alternate red/blue around unit; see specificaton. Locate side facing lights: [#LOC].	$2,455
5550-0110	Whelen Super LED lower level warning light package. Includes (4) red 600 LED light heads, (4) blue 600 LED light heads, (1) red 500 LED light head and (1) blue 500 LED light head. LIghts to alternate red/blue around unit; see specification. Locate side facing lights: [#LOC].	$2,774
5550-0114	Weldon Diamondback V46 LED lower level warning light package. Includes (10) red LED light heads w/clear lenses and chrome flanges. Locate side facing lights: [#LOC].	$2,982
5550-0117	Whelen Super LED lower level warning light package. Includes (6) 600 Super LED light heads (2 red forward/2 red rearward/2 amber rearward) and (6) side facing 500 Super LED red light heads w/chrome flanges where applicable. Requires additional side facing lights midship to meet blocking mode. Locate side facing lights: [#LOC].	$3,784
5550-0123	Whelen M6 Super LED lower level warning light package. Includes (8) red M6R LED light heads and (2) red 500 Super LED light heads w/chrome flanges. Locate side facing lights: [#LOC].	$3,090
5550-0125	Whelen M6RC Super LED lower level warning light package. Includes (8) red M6RC LED light heads and (2) red 500 Super LED light heads w/chrome flanges and clear lenses. Locate side facing lights: [#LOC].	$3,090
5550-0127	Federal Signal QuadraFlare LED lower level warning light package. Includes (10) QL64XFC-R LED light heads with clear lenses and bezels. Locate side facing lights: [#LOC].	$2,455
5550-0129	Whelen 600 series Super LED lower level warning light package. Includes (5) red LED light heads w/chrome flanges and (5) blue LED light heads w/chrome flanges. LIghts to alternate red/blue around unit; see specification. Locate side facing lights: [#LOC].	$2,936
5550-0130	Weldon Diamondback V46W-C/V26W-C LED lower level warning light package. Includes (8) red V46 LED light heads w/clear lenses and (2) red V26 LED light heads w/clear lenses. Locate side facing lights: [#LOC].	$2,880
5550-0131	Whelen Super LED lower level warning light package. Includes (8) 600 LED light heads (7 red,1 blue rear facing officer side) and (2) red 500 LED light heads w/chrome flanges. Locate side facing lights: [#LOC].	$2,774
5550-0132	Whelen Super LED lower level warning light package. Includes (8) red 600 LED light heads and (2) red TIR3 LED light heads grommet mounted. Locate side facing lights: [#LOC].	$2,642
5550-0133	Whelen 500 Series Super LED upper level rear warning light package. Includes (4) red Whelen 500 Super LED TIR6 lights with chrome bezels and clear lenses. Includes weatherproof connectors. Locate (1) rear facing each side up high, (1) side facing each side up high rearward on the body.	$966
5550-0135	Whelen Super LED lower level warning light package with clear lenses. Includes (6) red 600 LED light heads, (2) red/clear 600 split LED light heads (side facing forward position) and (2) red 500 LED light heads w/chrome flanges. Locate side facing lights: [#LOC].	$3,408
5550-0148	Whelen M6 Super LED lower level warning light package. Includes (6) red M6RC LED light heads with clear lenses and chrome flanges, (4) split red/clear M6D light heads with clear lenses and chrome flanges. See specifications for locations of split lights. Locate side facing lights: [#LOC].	$3,529
5550-0149	Whelen M6 Super LED lower level warning light package. Includes (10) red M6R LED light heads w/chrome flanges. Locate side facing lights: [#LOC].	$3,481
5550-0152	Federal Signal QuadraFlare LED lower level warning light package. Includes (8) QL64XF-R red LED light heads with bezels and (2) forward facing QL64SFC-RC split red/clear LED light heads with bezels. Locate side facing lights: [#LOC].	$2,547
5550-0154	Whelen M6 Super LED lower level warning light package. Includes (1) red M6RC LED light head with clear lens and chrome flange, (1) blue M6BC with clear lens and chrome flange and (8) split red/clear M6D light heads with clear lenses and chrome flanges. Locate side facing lights: [#LOC].	$3,779
5550-0155	Whelen Super LED lower level warning light package with clear lenses. Includes (8) 600 LED light heads (6 red,2 blue; (1) forward and (1) rearward facing officer side) and (2) red 500 LED light heads w/chrome flanges. Locate side facing lights: [#LOC].	$2,774
5550-0158	Federal Signal Viper EXT LED upper level rear warning light package. Includes (9) Viper EXT red LEDs; (5) center upper body rear facing, (2) driver upper body corner side facing and (2) officer upper body corner side facing.	$1,823
5550-0159	Whelen M6 Super LED lower level warning light package. Includes (6) M6RC red LED light heads with clear lenses, (2) M9RC red LED light heads with clear lenses and (2) red 500 Super LED light heads w/chrome flanges and clear lenses. Locate side facing lights: [#LOC].	$3,971
5550-0164	Whelen 600 series Super LED lower level warning light package. Includes (10) red LED light heads w/clear lenses and chrome flanges. Locate side facing lights: [#LOC].	$2,936
5550-0169	Federal Signal QuadraFlare LED lower level warning light package. Includes (10) QL64XF-B blue LED light heads with bezels. Locate side facing lights: [#LOC].	$2,455
5550-0170	Whelen Super LED lower level warning light package. Includes (8) 600 Series (4) red & (4) blue, (2) 400 Series (1) red & (1) blue and chrome flanges alternating in colors. Locate side facing lights: at forward most position, in rear wheelwell offset to front, and on tailboard mounted light box above rear tailboard. Lights will alternate color from light to light. All lights will have clear lenses with colored LEDs.	$2,936

5550-0171	Whelen Super LED lower level warning light package. Includes (4) red 600 LED light heads, (4) blue 600 LED light heads, (1) red 500 LED light head and (1) blue 500 LED light head. Lights to be driver side red, officer side blue; see specification. Locate side facing lights: [#LOC].	$2,774
5550-0173	Whelen M6 Super LED lower level warning light package. Includes (8) red M6R LED light heads and (2) red M2R LED light heads. Locate side facing lights: [#LOC].	$3,090
5550-0178	Whelen Super LED lower level warning light package with clear lens. Includes (8) red 600 LED light heads and (2) red 500 LED light heads w/chrome flanges. Locate side facing lights: [#LOC].	$2,774
5550-0180	Whelen M6 Super LED lower level warning light package. Includes (10) red M6 LED light heads w/clear lenses and chrome flanges. Locate side facing lights: [#LOC].	$3,481
5550-0181	Whelen Super LED lower level warning light package with clear lenses. Includes (8) red/clear M6 split LED light heads and (2) split red/clear M2 LED light heads w/chrome flanges. State of Maryland only. Locate side facing lights: [#LOC].	$3,812
5550-0183	Whelen M6 Super LED lower level warning light package. Includes (8) red M6R LED light heads and (2) red TIR3 LED light heads. Locate side facing lights: [#LOC].	$3,090
5550-0188	Whelen M6 Super LED lower level warning light package. Includes (6) red M6R and (4) blue M6B LED light heads w/chrome flanges. See specifications for color locations. Locate side facing lights: [#LOC].	$3,481
5550-0189	Whelen Super LED lower level warning light package. Includes (7) red 600 LED light heads, (1) blue 600 LED light heads and (2) red 500 LED light heads. Locate side facing lights: [#LOC].	$2,774
5550-0190	Federal Signal QuadraFlare LED lower level warning light package. Includes (5) QL64XF-R LED light heads with bezels and (5) QL64XF-B LED light heads with bezels. Lights to alternate red/blue around unit; see specificaton. Locate side facing lights: [#LOC].	$2,455
5550-0191	Weldon Diamondback V46/V79 LED lower level warning light package. Includes (8) red V46 LED light heads w/clear lenses and (2) red V79 LED light heads w/clear lenses. Locate side facing lights: [#LOC].	$3,500
5550-0192	Federal Signal QuadraFlare LED lower level warning light package. Includes (8) QL64XF-R LED light heads with bezels and (2) IMPAXX LED model IPX302-4 light heads. Locate side facing lights: [#LOC].	$2,200
5550-0194	Federal Signal QuadraFlare LED lower level warning light package. Includes (4) QL64XF-R LED light heads, (4) QL64XF-B LED light heads, (1) IMPAXX LED model IPX302-3 light head and (1) IMPAXX LED model IPX302-4 light head. Lights to alternate red/blue around unit; see specification. Locate side facing lights: [#LOC].	$2,240
5550-0197	Weldon Diamondback LED lower level warning light package. Includes (4) red V46 LED light heads w/clear lenses, (4) red V79 LED light heads w/clear lenses and (2) red V26 LED light heads w/clear lenses. Locate side facing lights: [#LOC].	$3,917
5550-0210	Federal Signal QuadraFlare LED lower level warning light package. Includes (8) Quadraflare light heads, (7) QL64XF-R (red) LED lights and (1) QL64XF-B (blue) LED light with bezels and (2) IMPAXX LED model IPX302-4 light heads. Locate side facing lights: [#LOC].	$2,200
5550-0211	Whelen Super LED lower level warning light package with clear lenses. Includes (8) 600 LED light heads (4 red driver's side, 4 blue officer's side) and (2) 500 LED light heads (1 red driver's side, 1 blue officer's side)w/chrome flanges. Locate side facing lights: [#LOC].	$2,774
5550-0214	Whelen Super LED lower level warning light package with clear lens. Includes (7) red 600 LED light heads, (1) blue 600 LED light heads and (2) red 500 LED light heads. Locate side facing lights: [#LOC].	$2,774
5550-0225	Whelen M6 Super LED lower level warning light package. Includes (8) red M6RC LED light heads with clear lens and (2) red M2RC LED light heads with clear lens. Locate side facing lights: [#LOC].	$3,090
5550-0227	Whelen M6/M7/600/IONWR Super LED lower level warning light package. Includes (2) red M6R LED light heads, (4) split red/clear M7D light heads, (2) 600 Series Super LED light heads, Red with clear lenses and (2) red IONWR LED light heads. See specification for location of split lights. Locate side facing lights: [#LOC].	$3,644
5550-0234	Whelen M6RC Super LED lower level warning light package. Includes (8) red M6RC LED light heads and (2) red 500 Super LED light heads w/chrome flanges and clear lenses. Locate side facing lights: [#LOC].	$3,090
5550-0236	Whelen M6 Super LED lower level warning light package. Includes (6) red M6R LED light heads, (2) blue M6B LED light heads (1 officer front and 1 officer rear facing) and (2) red M2R LED light heads. Locate side facing lights: [#LOC].	$3,090
5550-0238	Federal Signal QuadraFlare LED lower level warning light package. Includes (3) QL64XF-R LED light heads, (3) QL64XF-B LED light heads, (2) IMPAXX LED model IPX302-3 light head and (2) IMPAXX LED model IPX302-4 light head. Lights to alternate red/blue around unit; see specification. Locate side facing lights: [#LOC].	$2,240
5550-0240	Whelen Super LED lower level warning light package. Includes (8) red 600 LED light heads and (2) red 500 LED light heads w/chrome flanges. Locate side facing lights: [#LOC].	$2,774
5550-0241	Whelen M6 Super LED lower level warning light package. Includes (6) M6R red LED light heads, (2) M9R red LED light heads and (2) red M2R red Super LED light heads. Locate side facing lights: [#LOC].	$3,971
5550-0242	Whelen Super LED lower level warning light package. Includes (8) 600 LED light heads (6) Red/Blue (2) Red /White with clear lenses and (2) red 500 LED light heads with clear lenses and chrome flanges. Locate side facing lights: [#LOC].	$3,136
5550-0245	Whelen Super LED lower level warning light package. Includes (4) red 600 LED light heads, (4) blue 600 LED light heads, (1) red 500 LED light head and (1) blue 500 LED light head all with clear lenses. Lights to be driver side blue, officer side red; see specification. Locate side facing lights: [#LOC].	$2,774

5550-0248	Federal Signal QuadraFlare LED lower level warning light package with clear lenses. Includes (8) QL64XFC-R LED light heads with bezels and (2) IMPAXX LED model IPX300-4 light heads. Locate side facing lights: [#LOC].	$2,200
5550-0249	Whelen M6 Super LED lower level warning light package. Includes (5) red M6R LED light heads, (2) M6J split red/blue LED light heads, (1) blue M6B LED light head (officer front) and (2) red M2R LED light heads. Locate side facing lights: [#LOC].	$3,501
5550-0251	Whelen 600 series Super LED lower level warning light package. Includes (10) LED light heads w/chrome flanges. (5) Red, (5) blue alternating. Locate side facing lights: [#LOC].	$2,936
5550-0252	Whelen 600 series Super LED lower level warning light package. Includes (8) red LED light heads with clear lenses and (2) split red/blue LED light heads with clear lenses. Locate side facing lights: [#LOC].	$2,987
5550-0254	Whelen M6 Super LED lower level warning light package. Includes (4) red M6RC LED light heads with clear lenses and chrome flanges, (4) split red/clear M6D light heads with clear lenses and chrome flanges and (2) red M2RC LED light heads. See specifications for locations of split lights. Locate side facing lights: [#LOC].	$3,503
5550-0257	Whelen M6 Super LED lower level warning light package. Includes (10) red/blue M6J LED light heads w/chrome flanges and clear lenses. Locate side facing lights: [#LOC].	$3,437
5550-0258	Whelen M6 Super LED lower level warning light package. Includes (4) red M6R LED light heads, (4) blue M6B LED light heads, (1) red M2R LED light head and (1) blue M2B LED light head. Driver side red, officer side blue. Locate side facing lights: [#LOC].	$3,090
5550-0260	Federal Signal QuadraFlare LED lower level warning light package. Includes (4) QL64XF-R LED light heads, (4) QL64XF-B LED light heads, (1) IMPAXX LED model IPX302-3 light head and (1) IMPAXX LED model IPX302-4 light head. Lights to alternate red/blue around unit; see specification. Locate side facing lights: [#LOC].	$2,240
5550-0261	Whelen M6 Super LED lower level warning light package. Includes (10) M6RC red LED with clear lens light heads w/chrome flanges. Locate side facing lights: [#LOC].	$3,481
5550-0262	Whelen M6 Super LED lower level warning light package. Includes (10) blue M6B LED light heads w/chrome flanges. Locate side facing lights: [#LOC].	$3,481
5550-0264	Power Arc LED 4/2/2/2 red/white/blue/yellow lower level warning light package. Includes (4) P14SM, (2) M90DHL (1-WR, 1-BW), (2)M90FK and (2) LED210. See specifications for exact locations and colors. Locate side facing lights: [#LOC].	$5,560
5550-0265	Whelen M6 Super LED lower level warning light package. Includes (4) red M6R LED light heads, (4) blue M6B LED light heads, (1) red M2R LED light head and (1) blue M2B LED light head. Alternate red/blue around unit. Locate side facing lights: [#LOC].	$3,090
5550-0266	Federal Signal QuadraFlare LED lower level warning light package. Includes (6) QL64XF-R LED light heads with bezels, (2) QL64SFC-WR and (2) IMPAXX LED model IPX302-4 light heads. Locate side facing lights: [#LOC].	$2,814
5550-0267	Whelen Super LED lower level warning light package. Includes (8) red 600 LED light heads and (2) red 500 LED light heads w/chrome flanges. Locate side facing lights: [#LOC].	$2,774
5550-0269	Federal Signal QuadraFlare LED lower level warning light package. Includes (5) QL64XF-R LED light heads with bezels, (3) QL64XF-B LED light heads with bezels and (2) QL64XF-A LED light heads with bezels. Lights to located as per specificaton. Locate side facing lights: [#LOC].	$2,455
5550-0274	Federal Signal QuadraFlare LED lower level warning light package. Includes (7) QL64XF-R LED light heads, (1) QL64XF-G light head and (2) IMPAXX LED model IPX302-4 light heads. Locate side facing lights: [#LOC].	$2,461
5550-0275	Whelen M6 Super LED lower level warning light package. Includes (6) red M6R LED light heads and (4) red M2R LED light heads. Locate side facing lights: [#LOC].	$2,943
5550-0276	Code3 LED 6/2/2 lower level warning light package. Includes (8) model 65 red LED and (2) LXEX1F red LED lights all with clear lenses. Includes chrome bezels where applicable. Locate side facing lights: [#LOC].	$3,092
5550-0277	Federal Signal QuadraFlare LED lower level warning light package with clear lenses. Includes (8) QL64XFC-R red LED light heads with bezels and (2) IMPAXX LED model IPX600-B blue light heads. Locate side facing lights: [#LOC].	$2,261
5550-0278	Federal Signal QuadraFlare LED lower level warning light package. Includes (7) QL64XF-R LED, (1) QL64XF-B LED light head with bezel (driver rear facing), and (2) IMPAXX LED model IPX302-4 light heads. Locate side facing lights: at forward most position, centered in rear wheel well, and side facing at rear of body in rubrail if equipped.	$2,200
5550-0280	Federal Signal QuadraFlare LED lower level warning light package. Includes (8) QL64XF-B LED light heads with bezels and (2) IMPAXX LED model IPX302-3 light heads. Locate side facing lights: [#LOC].	$2,200
5550-0281	Whelen M6 Super LED lower level warning light package. Includes (6) red M6R LED light heads, (2) red 600 LED light heads and (2) red TIR3 LED light heads. Locate side facing lights: [#LOC].	$2,952
5550-0282	Whelen M6 Super LED lower level warning light package. Includes (8) red M6R and (2) blue M6B LED light heads w/chrome flanges. See specifications for color locations. Locate side facing lights: [#LOC].	$3,481
5550-0283	Code3 LED 8/2 red/blue lower level warning light package. Includes (8) model 65 LED and (2) LXEX1F LED lights. See specification for exact locations. Includes chrome bezels where applicable. Locate side facing lights: [#LOC].	$3,092
5550-0285	Whelen M6 Super LED lower level warning light package. Includes (7) red M6R LED light heads, (1) green M6G and (2) red M2R LED light heads. Locate side facing lights: [#LOC].	$3,139
5550-0286	Federal Signal QuadraFlare LED lower level warning light package with clear lenses. Includes (6) QL64SFC-RR LED light heads with bezels, (2) QL64SFC-WR and (2) IMPAXX LED model IPX300-4 light heads. See specification for exact locations. Locate side facing lights: [#LOC].	$2,917

5550-0287	Whelen Super LED lower level warning light package. Includes (6) red M6R LED light heads, (2) red 600 LED light heads and (2) red M2R LED light heads. Locate side facing lights: [#LOC].	$3,090
5550-0289	Whelen M6/M7/M2/M9 Super LED lower level warning light package with clear lenses. Includes (2) red M6RC LED light heads, (4) red M7RC light heads, (2) red M2RC LED light heads and (2) red M9RC LED light heads. See specification for exact locations lights. Locate side facing lights: [#LOC].	$3,613
5550-0290	Whelen M6 Super LED lower level warning light package. Includes (6) red M6RC LED light heads, (2) split red/amber M6K light heads and (2) red M2RC LED light heads. Locate side facing lights: [#LOC].	$3,412
5550-0291	Whelen Super LED lower level warning light package. Includes (6) red M6RC LED light heads with clear lenses, (2) red 600 LED light heads with clear lenses and (2) red M2RC LED light heads with clear lenses. Locate side facing lights: [#LOC].	$3,090
5550-0293	Whelen Super LED lower level warning light package with clear lenses. Includes (8) red 600 LED light heads and (2) red TIR3 LED light heads grommet mounted. Locate side facing lights: [#LOC].	$2,642
5550-0295	Whelen M6 Super LED lower level warning light package. Includes (6) red M6RC LED light heads, (2) red 6RBRC Rota-Beam LED and (2) red M2RC LED light heads with clear lenses. Locate side facing lights: [#LOC].	$3,654
5550-0296	Whelen LED upper level rear warning light package. Includes (1) rear facing Dominator Plus model DP88000 red and (2) 700 series Super LED; (1) driver upper body corner side facing and (1) officer upper body corner side facing.	$2,126
5550-0298	Whelen M6 Super LED lower level warning light package. Includes (6) M6RC red LED light heads, (2) M9 (1 red, 1 blue) LED light heads w/clear lenses and (2) red M2RC red Super LED light heads. Locate side facing lights: [#LOC].	$3,971
5550-0299	Whelen M6 Super LED lower level warning light package. Includes (7) red M6R and (3) blue M6B LED light heads w/chrome flanges. See specifications for color locations. Locate side facing lights: [#LOC].	$3,481
5550-0304	Whelen M6 Super LED lower level warning light package. Includes (8) red M6R LED light heads and (2) red PSR00FRR Super LED light heads w/chrome flanges. Locate side facing lights: [#LOC].	$3,090
5550-0305	Federal Signal QuadraFlare LED lower level warning light package. Includes (6) QL64XF-R LED light heads with bezels, (2) QL64SFC-WR and (2) IMPAXX LED model IPX302-4 light heads. Locate side facing lights: [#LOC].	$2,814
5550-0306	Whelen Super LED lower level warning light package. Includes (8) red 600 LED light heads and (2) red 500 LED light heads w/black flanges. Locate side facing lights: [#LOC].	$2,774
5550-0307	Whelen M6 Super LED lower level warning light package. Includes (8) red M6RC LED light heads with clear lens and (and (2) red TIR3 LED light heads grommet mounted with clear lenses. Locate side facing lights: [#LOC].	$3,090
5550-0309	Whelen Super LED lower level warning light package. Includes (6) 600 LED light heads, (4 red, 2 blue) and (4) red 500 LED light heads w/chrome flanges. Locate side facing lights: [#LOC].	$2,774
5550-0310	Whelen M6 Super LED lower level warning light package. Includes (6) M6RC red LED light heads, (2) M9RC red LED light heads and (2) red M2RC red Super LED light heads. Locate side facing lights: [#LOC].	$3,971
5550-0311	Whelen M6 Super LED lower level warning light package with clear lenses. Includes (7) red M6RC LED light heads, (1) blue M6BC light head and (2) blue M2BC LED light heads. Locate side facing lights: [#LOC].	$3,090
5550-0312	Whelen M6 Super LED lower level warning light package. Includes (4) M6RC red LED light heads, (2) M9RC red LED light heads and (4) red M2RC red Super LED light heads. Locate side facing lights: [#LOC].	$3,912
5550-0313	Whelen Super LED lower level warning light package with clear lenses. Includes (8) 600 LED light heads (1 red, 7 blue) and (2) blue 500 LED light heads w/chrome flanges. Locate side facing lights: [#LOC].	$2,774
5550-0314	Whelen Super LED lower level warning light package with clear lens. Includes (5) red 600 LED light heads, (3) blue 600 LED light heads and (2) red 500 LED light heads. Locate side facing lights: [#LOC].	$2,774
5550-0315	Power Arc LED 4/4/2 lower level warning light package. Includes 210LED-1B frt dr side, 210LED-2R frt off side, 210LED-2R rr dr side, 210LED-1B rr off side and (4) P14SM; (2) red, (2) blue. Locate side facing lights: [#LOC].	$4,150
5550-0316	Whelen M6 Super LED lower level warning light package. Includes (8) red M6RC LED light heads with clear lens and (2) red PSR00FRR LED light heads. Locate side facing lights: [#LOC].	$3,090
5550-0317	Whelen M6 Super LED lower level warning light package with clear lenses. Includes (4) M6V2 (2 red, 2 blue) LED light heads (4) M6 (2 red, 2 blue) LED light heads and (2) TIR3 (1 red, 1 blue) LED light heads. See specifications for exact locations. Locate side facing lights: [#LOC].	$4,620
5550-0318	Whelen Super LED lower level warning light package. Includes (6) red 600 LED light heads, (2) red M6V2R LED light heads and (2) red 500 LED light heads w/chrome flanges. Locate side facing lights: [#LOC].	$3,666
5550-0320	Whelen Super LED lower level warning light package. Includes (6) red 600 LED light heads. (2) blue 600 LED light heads and (2) red 500 LED light heads w/chrome flanges. Locate side facing lights: [#LOC].	$2,774
5550-0321	Federal Signal QuadraFlare LED lower level warning light package. Includes (6) QL64XF-R LED light heads, (2) QL64XF-B LED (rear facing) light heads and (2) IMPAXX LED model IPX302-4 light heads. Locate side facing lights: [#LOC].	$2,200

5600-0002	Warning light Whelen 600 series strobe (PR) [#COL]. Requires power pack or option with spare power pack outlets. Includes weatherproof connectors. Requires engineering approval for NFPA applications. Location(s): [#LOC]	$437
5600-0005	Warning light Whelen 700 series strobe (PR) [#COL]. Requires power pack or option with spare power pack outlets. Includes weatherproof connectors. Requires engineering approval for NFPA applications. Location(s): [#LOC]	$432
5600-0008	Warning light Whelen 900 series strobe (PR) [#COL]. Requires power pack or option with spare power pack outlets. Includes weatherproof connectors. Requires engineering approval for NFPA applications. Location(s): [#LOC]	$437
5600-0011	Whelen power supply model UPS64LX 4Place 75Watt strobe.	$564
5600-0012	Whelen power supply model ISP148 eight (8) place 140watt strobe.	$1,322
5600-0013	Whelen power supply model ISP188 eight (8) place 180watt strobe.	$1,414
5600-0017	Warning light Whelen 500 series LED (PR) red. Surface mounted with weatherproof connector. Location: [#LOC]	$429
5600-0020	Warning light Whelen 600 series LED (PR) amber. Location: [#LOC] Surface mounted with weatherproof connector. Requires engineering approval for NFPA applications.	$764
5600-0021	Warning light Whelen 600 series LED (PR) red. Surface mounted with weatherproof connector. Location: [#LOC]	$764
5600-0022	Warning light Whelen 700 series LED (PR) red. Surface mounted with weatherproof connector. Location: [#LOC]	$668
5600-0023	Warning light Whelen 900 series LED (PR) amber. Location: [#LOC] Surface mounted with weatherproof connector. Requires engineering approval for NFPA applications.	$1,381
5600-0024	Warning light Whelen 900 series LED (PR) red. Surface mounted with weatherproof connector. Location: [#LOC]	$1,381
5600-0025	Warning light Whelen 600 series halogen (PR) [#COL]. Includes weatherproof connectors. Requires engineering approval for NFPA applications. Location(s): [#LOC]	$353
5600-0027	Warning light Whelen 900 series halogen (PR) [#COL]. Includes weatherproof connectors. Requires engineering approval for NFPA applications. Location(s): [#LOC]	$353
5600-0029	Code3 Model 550 rotating (PR) with [#COL] domes. Location: [#LOC].	$378
5600-0030	Code3 Model #550/#41. Includes (2) #550's with red domes and (2) #41 lights with [#COL] lenses. Total four (4) lights at rear upper. Location of Model 550 lights: [#LOC].	$973
5600-0031	Code 3 / PSE Oscilaser warning light (PR). Lights are to be located on front of cab in the inboard position of the quad bezel.	$587
5600-0033	Whelen beacon with halogen rotator and 700 series strobe (PR) Model B6R with red domes and [#COL] strobes. Location [#LOC]. Requires power pack.	$836
5600-0034	Federal model SY12FS Sentry (PR) with [#COL] domes. Location: [#LOC].	$379
5600-0036	Federal model IVP100 Vector pod (PR) with [#COL] domes. Location: [#LOC].	$451
5600-0038	Federal Model IVP200F Vector pod warning light (PR) with [#COL] filters. Location: [#LOC].	$491
5600-0040	Whelen beacon Model RB6PAP (PR) with amber lenses. Located one (1) each side at rear. Location: [#LOC]	$461
5600-0041	Warning light Federal Signal GS2 strobe (PR) [#COL]. Requires power pack or option w/spare power pack outlets. Requires engineering approval for NFPA applications. Location(s): [#LOC].	$421
5600-0046	Warning light Federal Signal GH1F halogen (PR) [#COL]. Location(s): [#LOC]	$316
5600-0048	Warning light Federal Signal GL5 LED (PR) red. Location: [#LOC]	$624
5600-0049	Warning light Federal Signal GS5 strobe (PR) [#COL]. Requires power pack or option w/spare power pack outlets. Requires engineering approval for NFPA applications. Location(s): [#LOC]	$385
5600-0051	Warning light Federal Signal GL5 LED (PR) amber. Location: [#LOC].	$644
5600-0052	Federal Signal SPS4-NFPA (4) place 90 watt strobe power supply. Required when using Federal Signal strobes.	$559
5600-0053	Federal Signal SPS8-NFPA (8) place 192 watt strobe power supply. Required when using Federal Signal strobes.	$995
5600-0061	Mars 888 pedestal mounted traffic clearing light on front of cab above grille.	$925
5600-0062	Warning light Roto Ray 200 with red lenses. N/A on commercial chassis. Locate on front of cab center above grille.	$1,598
5600-0063	Warning light Roto Ray 200 with (2) red and (1) clear lenses. N/A on commercial chassis. Locate on front of cab center above grille.	$1,598
5600-0067	Federal Signal Model #100 beacon (PR) with [#COL] domes. Location: [#LOC].	$483
5600-0074	Opticom Emitter 3M #792H. Emitter and control only. Wire through parking brake. Location: [#LOC].	$2,956
5600-0075	Opticom Emitter 3M #592 Chrome. Emitter and dash control only. Wire through parking brake. Location: [#LOC].	$3,513
5600-0078	Whelen Super LED beacon (PR) model L31H with [#COL] domes. Location [#LOC].	$1,827
5600-0079	Whelen beacon with halogen rotator and 700 series LED (PR) Model B6TM with red domes and [#COL] LEDs. Location [#LOC].	$1,383
5600-0080	Whelen beacon with LED upper beacon and 700 series Super LED (PR) model B6LED with red domes and [#COL] LEDs. Location: [#LOC].	$2,797
5600-0081	Code 3 / PSE Oscilaser warning light clear (PR). Lights are to be located on front of cab above quad bezels.	$615
5600-0083	Warning light Code3 LXEX1F-R LED (PR). Surfaced mounted with clear lens. Location: [#LOC]	$696
5600-0085	Tomar strobe preemption emitter with chrome housing. Includes pedestal mount and switch on dash. Wire through parking brake. Location: [#LOC].	$1,443
5600-0086	Whelen beacon model RB6T (PR) with [#COL] domes. Location: [#LOC].	$392
5600-0087	Warning light Code 3 65BZA LED (PR) amber. Surface mounted with bezel. Location: [#LOC]	$562
5600-0088	Warning light Code 3 65BZR LED (PR) Red. Surface mounted with bezel. Location: [#LOC]	$562

5600-0089	Warning Light Code3 model #65BZRW split red/clear LED with chrome bezel (PR). Location: [#LOC].	$737
5600-0090	Warning light Federal Signal QuadraFlare QL64XF LED (PR) red. Surface mounted with bezel. Location: [#LOC].	$593
5600-0092	Opticom Emitter 3M #792HF. Emitter with filter and control only. Wire through parking brake. Location: [#LOC].	$2,956
5600-0093	Whelen beacon with halogen rotator and 700 series scene (PR) Model B6TH*Z1P. Dome color: [#COL]. Location [#LOC].	$1,166
5600-0094	Warning light Federal Signal QL64XF LED (PR) amber. Surface mounted with bezel. Location: [#LOC].	$593
5600-0098	Warning light Whelen 600 series Super LED (PR) amber. Location: [#LOC].	$591
5600-0099	Warning light Whelen 600 series Super LED (PR) red. Location: [#LOC].	$591
5600-0100	Warning light Whelen 600 series Super LED (PR) blue with clear lens. Location: [#LOC].	$591
5600-0101	Whelen beacon with halogen rotator and 700 series LED (PR) Model B6TM with amber dome on driver side, red dome officer side and [#COL] LEDs. Location [#LOC].	$1,383
5600-0105	Hazard (door ajar) light 2" LED. Location: [#LOC].	$34
5600-0106	Warning light Roto Ray LED with (2) red and (1) clear lights. Locate on front of cab center above grille.	$2,714
5600-0107	Warning light Roto-Ray LED with red lenses. Locate on front of cab center above grille.	$2,714
5600-0109	Warning light Whelen 500 series LED (4) red. Surface mounted with weatherproof connector. Flashing lights wired through door ajar. Location: One on each of the interior cab doors (outboard position).	$854
5600-0111	Warning light Whelen 600 series Super LED (PR) white with clear lens. Location: [#LOC].	$669
5600-0112	Warning light Whelen 600 series LED (PR) blue. Surface mounted. Location: [#LOC]	$877
5600-0117	Whelen Ultra Freedom Micro Edge LED (PR) model MCFLED25 clear lens with red LEDs. Location [#LOC].	$1,899
5600-0118	Warning light Whelen 500 series TIR6 Super LED (PR) red. Surface mounted 5TSMAC bezel with weatherproof connector. Location: [#LOC].	$498
5600-0124	Warning light Code 3 LXEX1F-R LED (PR) red. Surface mounted with bezel. Location: [#LOC]	$687
5600-0125	Code3 model 780 LED flasher. Flasher will control lower level warning lights ipo multiplexing	$1,609
5600-0128	Warning light Whelen 600 series split Super LED (PR) red/amber. Location: [#LOC]	$765
5600-0129	Warning light Whelen 600 series split Super LED (PR) red/clear. Location: [#LOC].	$824
5600-0130	Whelen model UFM8 LED flasher (PR). Flashers will control lower level warning lights ipo internal flashers. Locate (1) in cab and (1) in body.	$1,088
5600-0131	Light Whelen model PSR00FRR LED (PR) red. Location: [#LOC].	$376
5600-0132	Warning light Federal Signal QL64XF LED (PR). (1) red and (1) green. Location: Red driver and green officer in front quad inboard of NFPA warning light	$791
5600-0133	Warning light Whelen 900 series Super LED model 90RR5FRR (PR) red. Location: [#LOC].	$1,161
5600-0134	Warning light Whelen 600 series LED red/clear. Surface mounted with weatherproof connector(PR). Location: [#LOC]	$767
5600-0136	Federal MicroEscape LED beacon (PR) with [#COL] lenses. Location: [#LOC]. Requires additional upper level warning or Signal Master.	$1,983
5600-0137	Warning light Whelen 700 series Super LED (PR) red/clear. Surface mounted with weatherproof connector. Location: [#LOC]	$777
5600-0138	Warning light Whelen LIN3 series Super LED (PR) red with clear lens. Surface mounted RFLANGCD bezel with weatherproof connector. Location: [#LOC]	$372
5600-0139	Whelen beacon with LED upper beacon and 700 series Super LED (PR) model B6LED with red LEDs/clear domes and [#COL] LEDs/clear lenses. Location: [#LOC].	$2,797
5600-0140	Warning light circuit wiring through chassis reverse. All warning lights.	$75
5600-0142	Warning light Whelen 900 series Super LED model 90RA5FCR (PR) split red (bottom) / amber (top) with clear lenses. Location: [#LOC]	$1,161
5600-0143	Warning lights Whelen 600 series Super LED (PR) red w/clear lens. Location: [#LOC].	$591
5600-0144	Warning light Whelen 500 series TIR6 Super LED (PR) blue. Surface mounted 5TSMAC bezel with weatherproof connector. Location: [#LOC]	$498
5600-0147	Warning light Whelen 600 series LED (PR). Red driver, blue officer surface mounted with weatherproof connector. Location: [#LOC]	$820
5600-0152	Warning light Whelen 500 series LED (PR) green. Includes switch on pump panel labeled "Ready for Water" Location: (1) centered between grille and windshield on slope, (1) driver side (inside of beavertail if so equipped) up high below hosebed opposite officer discharge.	$762
5600-0153	Warning light Whelen 600 series split Super LED (PR) red/blue driver, red/amber officer. Location: [#LOC].	$765
5600-0154	Warning light Whelen 600 series Super LED (PR). Red driver, blue officer surface mounted with weatherproof connector. Location: [#LOC].	$591
5600-0156	Warning light Federal Signal QL64XF LED (PR) green. Surface mounted with bezel. Location: [#LOC].	$653
5600-0157	Federal Model SY12FS Sentry with green dome. Includes switch on driver overhead. Location: pole mounted center rear cab roof.	$383
5600-0160	Warning light Federal Signal QL97XF LED (PR) red. Surface mounted with bezel (if applicable). Location: [#LOC].	$855
5600-0161	Warning light Federal Signal QL97XF LED (PR) amber. Surface mounted with bezel (if applicable). Location: [#LOC]	$855
5600-0162	Warning light Federal Signal QL64XF LED (PR) blue. Surface mounted with bezel. Location: [#LOC].	$593

5600-0164	Warning light Federal Signal QL64XF LED (PR) white. Surface mounted with bezel. Location: [#LOC].	$686
5600-0165	Warning light Whelen 500 series Super Linear LED (PR) green. Location: [#LOC].	$526
5600-0166	Warning light Whelen 600 series Super LED (PR) green. Location: [#LOC].	$778
5600-0168	Fed QuadraFlare QL97SC-RA Red/Amber split color LED lights located on rear of body up high. Red on top on left side and bottom on right side to simulate "X" pattern. Includes external flasher.	$1,068
5600-0169	Warning light Whelen 900 series Super LED driver side amber / officer side red model 90AA5FAR / 90RR5FRR. Location: [#LOC].	$1,161
5600-0171	Warning light Whelen LIN3 series Super LED (PR) amber with clear lens. Surface mounted RFLANGCD bezel with weatherproof connector. Location: [#LOC]	$372
5600-0173	Federal MicroEscape NFPA compliant LED beacons (PR) clear lenses with [#COL] LED reflectors. Location: [#LOC].	$1,481
5600-0175	Warning light Whelen 700 series Super LED (PR) red. Location: [#LOC].	$591
5600-0176	Mars 888 pedestal mounted traffic clearing lights with clear lenses located one each side of cab above outer quad bezel.	$1,848
5600-0177	Whelen model UFM8 LED flasher (3). Flashers will control warning lights ipo internal flashers. Locate (1) in cab and (2) in body.	$1,632
5600-0181	Warning light Federal Signal Model 360501 LED w/ bezel (PR). Surfaced mounted with blue driver and red officer lenses. Location: [#LOC].	$549
5600-0182	Whelen beacon with LED upper beacon and 700 series Super LED (PR) Model B6LED with amber domes and [#COL] LEDs. Location [#LOC]	$2,797
5600-0183	Warning light Whelen 600 series Super LED (PR). blue driver, green officer surface mounted with weatherproof connector. Location: [#LOC].	$685
5600-0184	Warning light Federal Signal QL64XF LED (PR). (1) red driver, (1) blue officer. Surface mounted with bezel. Location: [#LOC]	$593
5600-0185	Federal Model IVP100 Vector pod (PR) located at the rear cab corners. Driver side to be amber with switch on driver's switch panel and automatically turn off when warning lts are on. Officer side to be blue with switch on driver's switch panel.	$754
5600-0187	Warning light Federal Signal QL97XF LED (PR). (1) red driver, (1) blue officer. Surface mounted with bezel (if applicable). Location: [#LOC].	$855
5600-0189	Federal Intelli model 650205 LED flasher (PR). Flashers will control lower level warning lights ipo internal flashers. Locate (1) in cab and (1) in body.	$863
5600-0190	Warning light Whelen 600 series Super LED (PR). Blue driver, amber officer surface mounted with weatherproof connector. Location: [#LOC].	$591
5600-0191	Whelen beacon with LED upper beacon and 700 series Super LED (PR) Model B6LED with amber driver and red officer domes and [#COL] LEDs. Location [#LOC].	$2,797
5600-0195	Code3 model XP9501NFPA1 (PR) red LED with clear domes. Location: [#LOC].	$2,009
5600-0196	Fed QuadraFlare QL64SC-RC Red/White split color LED lights in ptd smooth plt alum box above the grille. Red on top on left side and bottom on right side to simulate "X" pattern. Wired to lower zone lighting and switched off with parking brake. Includes ext flasher.	$1,579
5600-0197	Warning light Whelen 600 series Super LED (PR). red driver, green officer surface mounted with weatherproof connector. Location: [#LOC].	$685
5600-0198	Whelen PE215 emitter. Emitter and control only. Wire through parking brake. Location: [#LOC].	$850
5600-0199	Whelen beacon with LED upper beacon and 700 series Super LED (PR) Model B6LED with red driver and blue officer domes and [#COL] LEDs. Location [#LOC].	$2,797
5600-0200	Whelen beacon with LED upper beacon and 700 series Super LED (PR) Model B6LED with red driver and amber officer domes and [#COL] LEDs. Location [#LOC].	$2,797
5600-0201	Warning light Whelen 900 series Super LED model 90RB5FCR (PR) split red / blue with clear lense. Location: [#LOC].	$1,161
5600-0202	Warning light Weldon Diamondback V46W-C00R LED (PR) red w/ clear lenses. Includes diamond plate mounting box. Location: [#LOC].	$903
5600-0205	Warning light Federal Signal GL1F-B LED (PR) blue. Location: [#LOC].	$562
5600-0213	Whelen beacon with halogen rotator and 700 series LED (PR) Model B6TM with red dome on driver side, amber dome officer side and [#COL] LEDs. Location [#LOC].	$1,383
5600-0215	Power Arc (PR) Model LED210 yellow with clear lenses. Location: [#LOC].	$1,225
5600-0216	Warning light Whelen M9 series Super LED (PR) red. Location: [#LOC].	$1,337
5600-0217	Power Arc (PR) Model LED210 red with clear lenses. Location: [#LOC].	$1,225
5600-0221	Warning light Whelen LIN3 series Super LED (4) red with clear lens. Surface mounted RFLANGCD bezel with weatherproof connector. Location: 2 each side of ford logo on the front grill above and below center brush gaurd bar.	$741
5600-0223	Warning light Code 3 378ABZ LED (PR) amber. Surface mounted with bezel. Location: [#LOC].	$669
5600-0226	Warning light Federal Signal Model 360501-04 LED w/ bezel (PR). Surfaced mounted with red lens. Location: [#LOC].	$392
5600-0227	Warning light Whelen 600 series Super LED (PR). Red driver, blue officer surface mounted with clear lenses and weatherproof connector. Location: [#LOC].	$591
5600-0228	Warning light Whelen 900 series Super LED (PR) with clear lenses. (1) model 90RR5FCR red driver and (1) model 90BB5FCR blue officer. Each light shall have a clear lense w/ colored LEDs. Location: [#LOC].	$1,161
5600-0229	Warning light Whelen 500 series TIR6 Super LED (PR) red driver, blue officer with clear lenses. Surface mounted 5TSMAC bezel with weatherproof connector. Location: [#LOC]	$498
5600-0230	Warning light Whelen 600 series Super LED (PR) blue with blue lens. Location: [#LOC].	$591
5600-0234	Warning light Whelen Dominator series LED model D844000 red driver/blue officer with clear lenses. Location: [#LOC]. Wire through lower level warning.	$889

5600-0236	Whelen beacon with LED upper beacon and 700 series Super LED (PR) model B6LED with blue driver and red officer domes and [#COL] LEDs. Location: [#LOC].	$2,797
5600-0237	Warning light Whelen M7RC Linear Super LED (PR) red with clear lense. Location: [#LOC].	$656
5600-0238	Warning light Whelen 600 series Super LED (PR). (1) red steady burn front driver side below windshield and (1) flashing amber driver side above tail lights to meet California DOT requirements.	$591
5600-0240	Warning light Whelen M4R LED (4) red. Surface mounted with weatherproof connector. Flashing lights wired through door ajar. Location: One on each of the interior cab doors (outboard position).	$1,170
5600-0241	Warning light Whelen M6R series Linear Super LED (PR) red. Location: [#LOC].	$675
5600-0242	Warning light Whelen M6 series Linear Super LED (PR) split red/amber with clear lens. Location: [#LOC].	$740
5600-0243	Warning light Whelen 500 series split TIR6 Super LED (PR) red/amber. Surface mounted 5TSMAC bezel with weatherproof connector. Location: [#LOC].	$571
5600-0245	Warning light Federal Signal QL64XF LED (PR) red with clear lens. Surface mounted with bezel. Location: [#LOC]	$593
5600-0248	Warning light Whelen M9 series Super LED (PR) red driver, blue officer with clear lenses. Location: [#LOC].	$1,337
5600-0249	Warning light Whelen M6 series Linear Super LED (PR) red driver, blue officer with clear lenses. Location: [#LOC].	$675
5600-0250	Whelen beacon with LED upper beacon and 700 series Super LED (PR) Model B6LED with red LED/clear dome driver and blue LED/clear dome officer and [#COL] LEDs/clear lenses. Location: [#LOC].	$2,797
5600-0251	3m Opticom GPS vehicle system kit. Includes antenna, radio and control unit. Wired through park brake.	$8,140
5600-0252	Hazard (door ajar) light Federal Signal Fire Bolt strobe. Location: [#LOC].	$236
5600-0253	Warning light Federal Signal QL97XF LED (PR). (1) red driver, (1) amber officer. Surface mounted with bezel (if applicable). Location: [#LOC]	$855
5600-0254	Warning light Federal Signal QL97XF LED (PR). (1) amber driver, (1) red officer. Surface mounted with bezel (if applicable). Location: [#LOC]	$855
5600-0255	Warning light Whelen 900 series Super LED driver side red model (90RR5FRR) / officer side amber (90AA5FAR). Location: [#LOC]	$1,161
5600-0256	Warning light Whelen M-Series Super LED model M9J (PR) red/blue. Surface mounted with weatherproof connector. Location: [#LOC].	$1,337
5600-0257	Warning light Whelen M6 series Linear Super LED (PR) split red/blue with clear lens. Location: [#LOC].	$740
5600-0258	Warning light Whelen M9RC series Super LED (PR) red with clear lens. Location: [#LOC].	$1,135
5600-0259	Warning light Whelen M6BC series Linear Super LED (PR) blue with clear lens. Location: [#LOC].	$675
5600-0264	Whelen beacon with LED upper beacon and 700 series Super LED (PR) Model B6LED with blue LED/clear dome driver and red LED/clear dome officer and 700 series [#COL] LEDs/clear lenses. Location: [#LOC].	$2,797
5600-0267	Warning light Whelen Dominator series LED with red driver/blue officer with clear lenses. Location: [#LOC]. Wire through lower level warning.	$904
5600-0268	Mars 888 pedestal mounted traffic clearing light located one each side of cab outboard above the outer quad bezel on contoured pedestal bracket. Lens color(s): driver red, officer clear.	$2,203
5600-0269	Whelen Super LED beacon (PR) model L31H with red driver, amber officer LED and clear domes. Location [#LOC].	$1,827
5600-0270	Warning light Whelen 500 series vetical linear Super LED (PR) red with clear lens. Surface mounted with weatherproof connector. Location: [#LOC].	$591
5600-0271	Warning light Whelen 500 series TIR6 Super LED (PR) red with clear lens. Surface mounted 5TSMAC bezel with weatherproof connector. Location: [#LOC].	$498
5600-0272	Hazard (door ajar) light Federal Signal 2.5" LED model 607120-04. Location: [#LOC].	$58
5600-0273	Warning light Whelen 900 series Super LED (PR). (1) model 90RR5FCR red driver and (1) model 90BB5FCR blue officer. Each light shall have a clear lense w/ colored LEDs. Location: side facing (1) each side upper front body panels and side facing (1) each side upper rear body panels.	$1,161
5600-0274	Warning light Whelen 900 series Super LED (PR). (1) model 90RR5FCR red driver and (1) model 90BB5FCR blue officer. Each light shall have a clear lense w/ colored LEDs. Location: Rear facing up high on the rear one above each other.	$1,161
5600-0275	Warning light Whelen M6AC series Linear Super LED (PR) amber with clear lens. Location: [#LOC].	$675
5600-0276	Whelen Ultra Freedom Micro Edge LED (PR) model MCFLED clear lens with amber driver / red officer LEDs. Location [#LOC].	$1,899
5600-0277	Warning light Whelen M6C series Linear Super LED (PR) white. Location: [#LOC].	$675
5600-0279	Hazard (door ajar) light Whelen model L53RP red. Location: [#LOC].	$235
5600-0284	Whelen Super LED beacon (PR) model L31H with blue driver, red officer LED and clear domes. Location [#LOC].	$1,827
5600-0285	Warning light Roto-Ray LED with (1) red, (1) blue and (1) clear lenses. Locate on front of cab center above grille.	$2,714
5600-0286	Warning light Whelen M6RC series Super LED (PR) red with clear lens. Location: [#LOC].	$645
5600-0287	Warning light Whelen Dominator Plus model DP880000 with (8) red LINZ6 LEDs. Location: [#LOC]. Wire through lower level warning.	$1,486
5600-0289	Warning light Whelen 900 series Super LED model 90BB5FBR (PR) blue. Location: [#LOC].	$1,161

5600-0290	Warning light Whelen 600 series Super LED (PR) red with diamond plate mounting boxes. Location: [#LOC].	$760
5600-0291	Warning light Roto Ray LED with (1) red, (1) green and (1) white lights. Locate on front of cab center above grille.	$2,714
5600-0292	Warning light Whelen 900 series Super LED model 90RR5FRC (PR) red w/ clear lens. Location: [#LOC].	$1,161
5600-0294	Warning light Federal Signal IMPAXX model IPX600-R red LED w/ bezel (PR). Surfaced mounted with clear lens. Location: [#LOC].	$457
5600-0297	Warning light Whelen Dominator series LED model D860020 red/white. Includes R/W/R/R/R/R/W/R LEDs with clear lenses. Location: [#LOC]. Wire through lower level warning.	$893
5600-0298	Warning light Power Arc model M90FK-W LED (PR). Color: White. Location: [#LOC].	$977
5600-0299	Warning light Federal Signal IMPAXX LED model IPX302-4 w/ bezel (PR). Surfaced mounted with red lens. Location: [#LOC].	$313
5600-0301	Warning light Whelen M2 Super LED warning lights. Includes (2) red M2R LED light heads w/chrome flanges (if applicable). Location: [#LOC].	$538
5600-0302	Warning light Whelen M2 Super LED warning lights. Includes (2) red M2R LED light heads with clear lenses and chrome flanges (if applicable). Location: [#LOC].	$538
5600-0303	Whelen Super LED beacon (PR) model L31H with [#COL] domes. Location [#LOC].	$1,827
5600-0305	Warning light Whelen M6 series Linear Super LED (PR) amber driver, red officer with clear lenses. Location: [#LOC].	$675
5600-0306	Opticom Emitter 3M 794H. LED emitter and control only. Location and activation: [#LOC].	$2,276
5600-0307	Warning light Whelen 600 series LED (PR) with clear lens. Red driver, blue officer surface mounted with weatherproof connector. Location: [#LOC]	$820
5600-0309	Warning light Whelen Vertex Super LED warning lights. Includes (2) red model VTX609R LED light heads with clear lens, w/chrome flanges model VTXFC. Location: [#LOC].	$503
5600-0310	Warning light Whelen M6 series Linear Super LED (PR) split red/clear with clear lens. Location: [#LOC].	$740
5600-0312	Light Whelen model PSA00FAR LED (PR) amber. Location: [#LOC].	$376
5600-0313	Warning light Whelen 900 series Super LED with clear lens model 90BB5FCR (PR) blue. Location: [#LOC].	$1,161
5600-0314	Federal Signal Vision LED rotating beacons model VSLR-IPX-R1R21 with rear facing IPX6 red LED warning light (Requires additional rear facing warning lights for NFPA compliance). Location: [#LOC].	$2,285
5600-0315	Whelen Micro Liberty LED (PR) (1) driver Model MCSLED2R clear lense with red LEDs and (1) officer MCSLED2B clear lense with blue LEDs. Location: [#LOC].	$1,600
5600-0316	Warning light Whelen M4AC Super-LED lights (PR) amber with clear lenses. Location: [#LOC].	$866
5600-0317	Whelen Super LED beacon (PR) model L31H with red driver, blue officer LED and clear domes. Location: [#LOC].	$1,827
5600-0320	Warning light Whelen ION series Super LED (2) red and (1) white with clear lens. Location: [#LOC].	$895
5600-0321	Mars 888 pedestal mounted traffic clearing light located one each side of cab outboard above the outer quad bezel on contoured pedestal brkt. Lens color: clear.	$2,203
5600-0322	Warning light Whelen M7D series Linear Super LED (PR) split red/clear with clear lens. Location: [#LOC].	$749
5600-0327	Warning light Whelen Dominator series LED model D880000 red with clear lenses. Location: [#LOC]. Wire through lower level warning.	$889
5600-0328	Warning light Whelen M7 series Linear Super LED (PR) white light with clear lens. Location: [#LOC].	$656
5600-0330	Warning light Federal Signal IMPAXX model IPX602-R red LED w/ bezel (PR). Surfaced mounted with red lens. Location: [#LOC].	$457
5600-0331	Federal Signal Vision LED rotating beacons model VSLR-R with red LED warning light(s) and red lenses (Requires additional rear facing warning lights for NFPA compliance). Location: [#LOC].	$1,707
5600-0332	Mars 888 pedestal mounted traffic clearing light located (1) each side of cab outboard above the outer quad bezel on contoured pedestal bracket. Driver side red, officer side clear.	$2,203
5600-0333	Warning light Whelen M9 series Super LED (PR) red driver, amber officer. Location: [#LOC].	$1,337
5600-0334	Warning light Whelen IONWR series Super LED red in color. Location: [#LOC].	$615
5600-0336	Warning light Roto Ray LED with (1) red, (1) amber and (1) clear lights. Locate on front of cab center above grille.	$2,714
5600-0338	Warning light Whelen M9 series Super LED (PR) red officer, amber driver. Location: [#LOC].	$1,337
5600-0339	Warning light Whelen 600 series Super LED (PR). Red officer, blue driver surface mounted with weatherproof connector. Location: [#LOC].	$591
5600-0340	Warning light Whelen M6 series Linear Super LED (PR) red driver, blue officer. Location: [#LOC].	$675
5600-0341	Warning light Whelen 600 series split Super LED (PR) red/blue with clear lens. Location: [#LOC].	$765
5600-0342	Whelen beacon with LED upper beacon and 700 series Super LED (PR) Model B6LED with blue driver and amber officer domes and [#COL] LEDs. Location [#LOC].	$2,797
5600-0345	Warning light Federal Signal IMPAXX LED model IPX300-4 w/ bezel (PR). Surfaced mounted red LEDs with clear lens. Location: [#LOC].	$313
5600-0347	Warning light Whelen 900 series Super LED blue driver, amber officer. Location: [#LOC].	$1,161
5600-0350	Hazard (door ajar) light Whelen Vertex red LED model VTX609R w/chrome bezel. Location: [#LOC].	$253
5600-0352	Warning light Whelen M6G series Linear Super LED (PR) green. Location: [#LOC].	$867
5600-0354	Warning lights Whelen LINZ6 LEDs (PR) red in color with chrome bezels if applicable. Location: [#LOC].	$450

5600-0355	Whelen beacon with LED upper beacon and 700 series Super LED (PR) Model B6LED with blue domes and [#COL] LEDs. Location: [#LOC].	$2,797
5600-0357	Warning light Whelen M6 series Linear Super LED (PR) red driver, green officer. Location: [#LOC].	$675
5600-0358	Warning light Federal Signal Viper EXT Model VPX802-4 LED w/ bezel rear upper level package. Includes (9) surfaced mounted with red lens; (5) up high rear of body and (2) side facing on each side of body up high and rearward (as applicable).	$2,408
5600-0359	Warning light Federal Signal IMPAXX LED model IPX302 w/ bezel (PR) (driver blue, officer red). Surfaced mounted with colored lens. Location: [#LOC].	$313
5600-0360	Warning light Federal Signal QuadraFlare QL64XF LED (EA) red. Light to be steady burn to meet California DOT requirements. Surface mounted with bezel. Location: [#LOC].	$265
5600-0362	Power Arc beacon (PR) Model LEDB210 with [#COL] domes. Location: [#LOC].	$1,203
5600-0364	Warning light Roto Ray LED with (2) green and (1) clear lights. Locate on front of cab center above grille.	$2,714
5600-0366	Warning light Whelen 500 series TIR6 Super LED (2) blue and (3) amber. Surface mounted 5TSMAC bezel with weatherproof connector. Lights to activate when park brake is set in blocking mode. Location: [#LOC].	$1,246
5600-0367	Warning light Whelen 600 series Super LED (PR) amber with clear lens. Location: [#LOC].	$591
5600-0368	Warning light Whelen M6A series Linear Super LED (PR) amber. Location: [#LOC].	$675
5600-0370	Warning light Whelen M-Series Super LED model M9AC (PR) amber with clear lens. Surface mounted with weatherproof connector. Location: [#LOC].	$1,135
5600-0371	Whelen Ultra Freedom Micro Edge LED (PR) model MCFLED2RB clear lens with (1) red/(1) blue LEDs. Location: [#LOC].	$1,899
5600-0372	Light Code 3 model DB2-2PZNFPA2 (PR) with clear lenses. Located: [#LOC].	$1,906
5600-0373	Warning Light Code3 model #65BZCB blue LED with clear lens and chrome bezel (PR). Location: [#LOC].	$1,061
5600-0374	Warning light Federal Signal QL64XFC LED (PR) blue with clear lenses. Surface mounted with bezel. Location: [#LOC].	$593
5600-0375	Warning light Federal Signal IMPAXX model IPX600-B blue LED w/ bezel (PR). Surfaced mounted with clear lens. Location: [#LOC].	$457
5600-0377	Federal Signal Vision LED rotating beacons model VSLR-R2A02 with rear facing IPX6 amber LED warning light. Location: [#LOC].	$2,285
5600-0378	Warning light Code 3 65BZCR LED (PR) Red with clear lens. Surface mounted with bezel. Location: [#LOC]	$562
5600-0379	Warning light Federal Signal QL97XFC-R LED (PR) red with clear lenses. Surface mounted with bezel (if applicable). Location: [#LOC].	$855
5600-0380	Warning light Federal Signal QL64SFC split LED (PR) driver red/clear, officer red/green. Surface mounted with bezel. Location: [#LOC].	$747
5600-0381	Hazard (seat belt warning) blue light 2" LED. Location: Adjacent to door ajar light.	$34
5600-0383	Warning light Whelen 900 series Super LED (PR). (1) model 90RR5FRR red driver and (1) model 90BB5FBR blue officer. Location: [#LOC].	$1,161
5600-0385	Whelen Super LED ROTA-BEAM beacon (PR) model R316 Series [#COL] domes. Location [#LOC].	$1,988
5600-0386	Warning light Whelen M2 Super LED warning lights. Includes (2) amber M2A LED light heads w/chrome flanges (if applicable). Location: [#LOC].	$538
5600-0388	Hazard (light tower ajar) amber light 2" LED. Location: [#LOC].	$34
5600-0389	Warning light Whelen M4RC Super-LED lights (PR) red with clear lenses. Location: [#LOC].	$517
5600-0390	Mars 888 LED pedestal mounted traffic clearing light located one each side of cab outboard above the outer quad bezel on contoured pedestal brkt. Lens color: clear.	$3,495
5600-0391	Warning light Whelen M4R Super-LED lights (PR) red. Location: [#LOC].	$517
5600-0392	Whelen Ultra Freedom Micro Edge LED (PR) model MCFLED2 clear lens with blue driver / red officer LEDs. Location (1) each side of body on rearward compartment top.	$1,851
5600-0393	Warning light Whelen M6GC series Linear Super LED (PR) green with clear lenses. Location: [#LOC].	$689
5600-0395	Warning light Whelen M-Series Super LED model M9K (PR) red/amber. Surface mounted with weatherproof connector. Location: (1) on each side up high rear of body.	$1,337
5600-0396	Warning light Whelen Dominator series LED model D66000 red with clear lenses. Location: [#LOC]. Wire through lower level warning.	$789
5600-0397	Warning light Whelen WIONA series Super LED amber in color (ea). Locate rear of body below directional lightbar wired through reverse.	$308
5600-0398	Warning light Whelen 500 series TIR6 Super LED (PR)1-red driver, 1-green officer. Surface mounted 5TSMAC bezel with weatherproof connector. Location: [#LOC].	$498
5600-0399	Warning light Whelen M9 series Super LED (PR) red with diamond plate mounting boxes. Location: [#LOC].	$1,431
5600-0400	Warning light Whelen IONWA series Super LED amber in color. Location: [#LOC].	$615
5600-0401	Warning light Whelen M6B series Linear Super LED (PR) blue. Location: [#LOC].	$675
5600-0402	Warning light Whelen M9 series Super LED (PR) blue driver, red officer with clear lenses. Location: [#LOC].	$1,337
5600-0404	Whelen beacon with LED upper beacon and 700 series Super LED (PR) Model B6LED with amber LED/clear dome driver and red LED/clear dome officer and [#COL] LEDs/clear lenses. Location: [#LOC].	$2,797
5600-0405	Warning light Whelen M9 series Super LED (PR) red with (1) officer side diamond plate mounting box. Location: driver side facing uppper body corner, officer rear compartment top outboard.	$1,388

5600-0406	Warning light Whelen 500 series TIR6 Super LED (2) blue and (3) red. Surface mounted 5TSMAC bezel with weatherproof connector. Lights to activate when park brake is set in blocking mode. Location: [#LOC].	$1,246
5600-0407	Whelen Ultra Freedom Micro Edge LED (PR) model MCFLED red lens with red LEDs. Location [#LOC].	$1,899
5600-0408	Warning light Federal Signal QL97XF LED (PR) red with diamond plate mounting box. Surface mounted with bezel (if applicable). Location: [#LOC].	$1,023
5600-0409	Whelen beacon with LED upper beacon and 700 series Super LED (PR) model B6LED with red domes and 700 series Super LED scene lights rear facing. Location: [#LOC].	$2,952
5600-0410	Warning light Whelen 600 series Super LED (PR) red with black flange. Location: [#LOC].	$591
5600-0411	Install customer supplied Opticom GPS system. Labor only; all components to be provided. See sales for locations.	$725
5600-0412	Warning light Federal Signal QL64XF LED (EA) white. Surface mounted with bezel. Location: [#LOC].	$344
5600-0414	Warning light Whelen 900 series Super LED (PR). (1) model 90RR5FRR red officer and (1) model 90BB5FBR blue driver. Location: [#LOC].	$1,161
5600-0415	Warning/Scene light Whelen M9V2R Super LED (PR) red. Location: [#LOC].	$1,948
5600-0417	Enclose bottom of aerial style bracket for no exposed wiring.	$91
5600-0418	Warning light Whelen 500 series TIR6 Super LED red. Surface mounted 5TSMAC bezel with weatherproof connector. Light to be steady burn while the parking brake is disengaged. Location: Centered in front cab grill	$290
5600-0419	Mars 888 LED pedestal mounted traffic clearing light located one each side of cab outboard above the outer quad bezel on contoured pedestal brkt. Lens color: Red.	$3,495
5600-0420	Power Arc (PR) Model LED210 driver blue, officer red. Location: [#LOC].	$1,225
5600-0421	Whelen beacon with Rota-Beam LED upper beacon and M7 series Super LED (PR) model B63M7 with red domes and [#COL] LEDs. Location: [#LOC].	$3,034
5600-0422	Warning light Whelen WIONR series Super LED red in color (PR). Locate [#LOC].	$549
5600-0423	Warning light Whelen Rota-Beam series model 6RBRC Super LED (PR) red with clear lenses. Location: [#LOC].	$943
5600-0424	Warning light Whelen M6 series Linear Super LED (PR) blue driver, red officer with clear lenses. Location: [#LOC].	$675
5600-0425	Code 3 / PSE Oscilaser warning light red (PR). Lights are to be located on front of cab above quad bezels.	$615
5600-0426	Warning/Scene light Whelen M9V2 Super LED (PR) red driver, blue officer with clear lenses. Location: [#LOC].	$1,948
5600-0427	Warning light Whelen M9 series Super LED (PR) blue driver, red officer. Location: [#LOC].	$1,337
5600-0428	Warning light Whelen 500 series split TIR6 Super LED (PR) red/blue. Surface mounted 5TSMAC bezel with weatherproof connector. Location: [#LOC].	$571
5600-0429	Warning/Scene light Whelen M9V2 Super LED (PR) red driver, blue officer. Location: [#LOC].	$1,948
5600-0430	Whelen Rota-Beam LED lights (3) red/blue/red with clear lenses and smooth plate mounting box painted upper 2-tone job color. Location: centered below windshield.	$1,802
5600-0431	Warning light Whelen 600 series Super LED (PR). Amber driver, blue officer surface mounted with weatherproof connector and clear lenses. Location: [#LOC].	$591
5600-0432	Warning light Whelen 600 series Super LED (PR). Red officer, blue driver surface mounted with clear lenses and weatherproof connector. Location: [#LOC].	$591
6000	**Aerial**	
6100-0000	Ladder HM100 with waterway to 80 ft. Includes partial fly section K-bracing, left side console with cover, split steps at tip and jack leg flood lights.	$227,133
6100-0001	Ladder HM100 without waterway. Includes partial fly section K-bracing, left side console with cover, split steps at tip and jack leg flood lights.	$199,379
6100-0002	Ladder 110 with waterway to 87'. Includes partial fly section K-bracing, left side console with cover, split steps at tip and jack leg flood lights.	$227,204
6100-0003	Ladder 110 without waterway. Includes partial fly section K-bracing, left side console with cover, split steps at tip and jack leg flood lights.	$199,452
6100-0005	Ladder HP75 with waterway. Includes left side console with cover, split steps at tip and jack leg flood lights.	$184,800
6100-0006	Ladder HP100. Includes pinned waterway, left side console with cover, split steps at tip and jack leg flood lights.	$284,525
6100-0007	Ladder CR100 with waterway. Includes left side console with cover, split steps at tip and jack leg flood lights.	$280,160
6100-0008	Platform HP95 Mid-Mount. Includes driver side roll top console, level assist and jack leg flood lights.	$381,586
6100-0009	Ladder HP100 SideStacker. Includes pinned waterway, left side console with cover, turntable mansaver bars, split steps at tip and jack leg flood lights.	$285,438
6100-0010	Ladder CR100 SideStacker with waterway. Includes left side console with cover, turntable mansaver bars, split steps at tip and jack leg flood lights.	$281,074
6100-0016	Ladder HP100 tiller. Includes pinned waterway, console cover, split steps at tip and jack leg flood lights. Hydraulic reservoir on tractor chassis to have access panel on front of reservoir to service suction strainer.	$409,400
6100-0018	Platform HP100 with SideStacker T/T. Includes left side roll top console, turntable mansaver bars and jack leg flood lights.	$362,859
6100-0019	Platform HP100 with full turntable. Includes left side roll top console, turntable mansaver bars and jack leg flood lights.	$362,859

6100-0020	Ladder HM100 with waterway to tip. Includes full fly section K-bracing, left side console with cover, split steps at tip and jack leg flood lights.	$230,635
6100-0025	Aerial chassis components for 95-Platform/CR100/110H/135. Requires customer supplied aerial and aerial overhaul/upgrade package.	$144,470
6100-0026	Raise aerial turntable pedestal and boom support 1" (Required on HP100 Platform with long or extended cab).	$2,739
6100-0027	Ladder HP78 500 lb tip load with waterway. Includes left side console with cover, split steps at tip and jack leg flood lights.	$187,051
6100-0028	Ladder HP78 750 lb tip load with waterway. Includes left side console with cover, split steps at tip and jack leg flood lights.	$187,051
6100-0030	Lower aerial turntable pedestal and boom support 6in (HM100/110/LTH100). Top of turntable support to top of torque box to be 36.25in.	$831
6100-0031	Ladder 110' SideStacker with waterway to 87'. Includes partial fly section K-bracing, left side console with cover, turntable mansaver bars, split steps at tip and jack leg flood lights.	$228,119
6100-0032	Lower aerial turntable pedestal and boom support 3" (HP100 ladder). Top of turntable support to top of torque box to be 35.813".	$831
6100-0033	Ladder CR137 with waterway to 110'. Includes left side console with cover, split steps at tip and jack leg flood lights.	$290,537
6100-0034	Ladder CR137 SideStacker with waterway to 110'. Includes left side console with cover, turntable mansaver bars, split steps at tip and jack leg flood lights.	$291,451
6100-0035	Lower aerial turntable pedistal and boom support (CR100/95-Platform). Top of turntable support to top of torque box to be 32.875" (for use with a 58" high body).	$831
6100-0036	Ladder HM100 with waterway to tip for SideStacker body. Includes full fly section K-bracing, left side console with cover, split steps at tip and jack leg flood lights.	$231,550
6100-0037	Ladder HP100. For use with center rear staircase body. Includes pinned waterway, rear handrail extension (PR) on turntable, left side console with cover, split steps at tip and jack leg flood lights.	$284,813
6100-0038	Lower aerial turntable pedestal and boom support 3in (HM100/110/LTH100). Top of turntable support to top of torque box to be 39.25in.	$831
6100-0039	Lower aerial turntable pedestal and boom support 4". For use with 65" high body.	$521
6100-0040	Platform HP100 (2000 GPM capacity) with SideStacker T/T. Includes perimeter flow w/way pipe, 5" swivel, 5" lower w/way piping, left side roll top console, turntable mansaver bars and jack leg flood lights.	$364,771
6100-0041	Raise aerial turntable pedistal and boom support 2". Top of turntable support to top of torque box to be 36". (Required on Industrial HP100 Platform 750 gallon or greater tank).	$2,795
6100-0042	Ladder LTH100 without waterway. Includes left side console with cover, adjustable height turntable handrails, split steps at tip and jack leg flood lights.	$198,310
6100-0043	Lower aerial turntable pedistal and boom support 2" (HP100 Platform). Top of turntable support to top of torque box to be 32".	$831
6100-0044	Ladder LTH100 with waterway to tip. Includes left side console with cover, adjustable height turntable hand rails, split steps at tip and jack leg flood lights.	$229,567
6100-0045	Ladder HP75 with waterway. Includes left side console with smooth plate cover, split steps at tip and jack leg flood lights.	$184,800
6100-0047	Ladder LTH100 with waterway to 80 ft. Includes left side console with cover, adjustable height turntable hand rails, split steps at tip and jack leg flood lights.	$226,091
6100-0048	Lower aerial turntable pedistal and boom support 7". For use with 62" hign body.	$521
6100-0050	There shall be no visible raw diamond plate (unpainted) on the aerial turntable. The following items on the turntable to be diamond plate painted black durabak: turntable console, turntable deck and access step w/gator grip.	$770
6100-0051	Raise aerial turntable pedistal and boom support 1". Top of turntable support to top of torque box to be 36.875". (Applicable to 95P/CR100/CR137 w/sidestacker style frame cut).	$2,739
6100-0052	Raise aerial turntable pedistal and boom support 2". Top of turntable support to top of torque box to be 37.875". (Applicable to 95P/CR100/CR137 w/sidestacker style frame cut).	$2,739
6100-0053	Hinged turntable console cover IPOS. Cover to be diamond plate with hinge on outboard side. Includes modified left side turntable handrail.	$470
6100-0061	Ladder HP100 SideStacker w/o waterway. Includes left side console with cover, turntable mansaver bars, split steps at tip and jack leg flood lights.	$260,124
6150-0000	Cold weather package for aerial hydraulic system.	$2,576
6150-0001	Aerial hydraulic filter isolation kit.	$365
6150-0002	Aerial hydraulic reservoir to be located in lower L1 compt.	$949
6150-0003	Gauge aerial hydraulic oil level. Electronic display to be located [#LOC].	$560
6150-0004	Extended length outrigger foot (PR). Required with 33k rear axle.	$342
6150-0005	Aerial hydraulic oil reservoir to be stainless steel IPOS. Includes flange type hyd fittings. Not for use in southern climates.	$1,677
6150-0006	Gauge aerial hydraulic oil level. Electronic display to be located on upper rear surface of turntable control console.	$779
6150-0007	Aerial hydraulic reservoir to be located front center of body on "H" style bracket.	$949
6150-0008	Integral outrigger pad extensions (4). 15" x 20" x .5" steel plate welded to std jack foot plates.	$421
6150-0009	Cold weather package for shared aerial hydraulic system.	$263
6150-0011	Aerial hydraulic sight level gauge IATS. To be located on forward face of aerial reservoir viewable from a hinged door facing outboard behind compartment plate work.	$601
6150-0012	Extended length outrigger foot (4). Required with >54k rear axle on HP100 Platform.	$140
6150-0015	Aerial hydraulic pump to have drive through provision.	$493
6150-0016	Special aerial hydraulic reservoir due to customer's ladder compliment.	$1,116

6300-0001	Monitor Elkhart electric 1000 GPM for ladder. Includes tip and base controls.	$11,094
6300-0002	Monitor Akron electric 1000 GPM for ladder. Includes tip and base controls.	$10,993
6300-0004	Monitor Elkhart electric 1250GPM. Includes tip controls, base controls and a butterfly valve.	$10,993
6300-0007	Monitor Akron electric 1250GPM for platform. Includes tip controls, base controls and butterfly valve.	$11,146
6300-0009	Monitor Elkhart dual for platform. Rated at 1250 GPM on the 92 Pltfrm and 1500 GPM on the HP95MM and HP100 Pltfrm. Includes (1) electric and (1) manual monitor, (2) butterfly valves and tip/base controls for the electric monitor. Monitor sweep is 67.5 degrees outward and 22.5 degrees inward.	$16,689
6300-0010	Monitor Akron dual for platform. Rated at 1250 GPM on the 92 Pltfrm and 1500 GPM on the HP95MM and HP100 Pltfrm. Includes (1) electric and (1) manual monitor, (2) butterfly valves and tip/base controls for the electric monitor. Monitor sweep is 67.5 degrees outward and 22.5 degrees inward.	$17,067
6300-0011	1000 GPM Akron electric monitor for Tiller ladder. Includes auto-stow, tip and base controls.	$12,252
6300-0014	Monitor TFT electric 1250GPM with powder coated silver finish. Includes tip controls, base controls and a butterfly valve. Monitor to have multiple flow ratings based on position.	$13,323
6300-0015	Monitor TFT dual for platform with powder coated silver finish. Rated at 1250 GPM on the 92 Pltfrm and 1500 GPM on the HP95MM and HP100 Pltfrm. Includes (1) electric and (1) manual monitor, (2) butterfly valves and tip/base controls for the electric monitor. Monitor sweep is 67.5 degrees outward and 22.5 degrees inward.	$17,805
6300-0016	Monitor TFT electric 1000 GPM for ladder with a powder coated silver finish. Includes tip and base controls.	$10,993
6300-0018	Monitor painted job color.	$402
6300-0020	Monitor Akron electric 1250GPM with SabreMaster nozzle. Includes tip controls, base controls and a butterfly valve.	$12,160
6300-0025	Monitor Elkhart Scorpion RF 1000GPM for ladder. Includes (1) handheld control, OEM transmitter with tip and base controls.	$14,056
6300-0029	Monitor painted two-tone (secondary) job color.	$402
6300-0030	Monitor Akron dual for platform. Rated at 1250 GPM on the 92 Pltfrm and 1500 GPM on the HP95MM and HP100 Pltfrm. Includes (1) electric with SabreMaster nozzle and (1) manual monitor, (2) butterfly valves and tip/base controls for the electric monitor. Monitor sweep is 67.5 degrees outward and 22.5 degrees inward.	$18,079
6300-0031	Monitor Akron 3578 electric 1000GPM for ladder. Includes 3499 stack tips, 3485 steam shaper and base controls.	$10,659
6300-0032	Monitor Akron electric 1000GPM with SabreMaster nozzle for ladder. Includes tip and base controls.	$12,129
6300-0033	Monitor Akron electric 1500GPM. Side sweep limited to 45 degrees. Up sweep limited to 30 degrees. Includes tip controls, base controls and a butterfly valve.	$11,725
6300-0034	Monitor Akron electric 1250GPM. Includes 3499 stack tips, 3485 steam shaper, tip controls, base controls and a butterfly valve.	$10,463
6300-0037	Monitor Akron 3578 electric 1000GPM for ladder. Includes base controls. Does not include nozzle or tips. For use with dept supplied 3499 stack tips and 3485 steam shaper (to be noted on the NFPA exceptions document).	$10,006
6300-0039	Semi-Automatic stow upgrade for TFT monitor on aerial ladder. Includes switches with indicatior lights at aerial turntable and pump panel control stations. Requires use of TFT control sys IPO OEM.	$724
6300-0040	Semi-automatic stow upgrade for Akron monitor on aerial. Includes switch with indicatior light at aerial control console(s).	$695
6300-0041	Monitor controls on pump operators panel. HP75/HP78 only.	$833
6300-0042	Monitor Akron electric 1500GPM for ladder. Includes tip and base controls. Side sweep limited to 45 degrees.	$11,514
6300-0043	Monitor TFT dual for platform. Rated at 1250 GPM on the 92 Pltfrm and 1500 GPM on the HP95MM and HP100 Pltfrm. Includes (1) electric and (1) manual monitor w/stacked tips, (2) butterfly valves and tip/base controls for the electric monitor. Monitor sweep is 67.5 degrees outward and 22.5 degrees inward.	$17,285
6300-0044	Monitor Akron electric 1000GPM StreamMaster XT with SabreMaster nozzle for ladder. Includes tip controls, base controls and stow feature.	$14,229
6300-0045	Monitor Elkhart dual for platform. Rated at 1250 GPM on the 92 Pltfrm and 1500 GPM on the HP95MM and HP100 Pltfrm. Includes (2) manual monitors, (2) butterfly valves. Monitor sweep is 67.5 degrees outward and 22.5 degrees inward.	$11,393
6300-0046	Wireless control for Akron monitor on aerial. Includes (1) transmitter.	$1,898
6300-0047	Monitor painted FLNA3225 red.	$402
6300-0048	Wireless control for TFT Monitor on aerial. Includes (1) transmitter and stainless steel mounting bracket.	$2,378
6300-0049	Monitor TFT electric 1000GPM for ladder with a powder coated silver finish. Includes stacked tips with tip and base controls.	$10,183
6300-0050	Monitor TFT electric 1000GPM for ladder. Includes shut off valve at tip (VUM) with 2.5" aux discharge valve. Includes tip and base controls. Monitor has a powder coated silver finish. Requires high flow W/W relief vlv.	$12,905
6300-0051	Monitor Elkhart dual for platform. Rated at 1250 GPM on the 92 Pltfrm and 1500 GPM on the HP95MM and HP100 Pltfrm. Includes (1) electric Scorpion EXM w/SM-1250 nozzle and (1) manual Scorpion monitor w/handwheels and ST-195 stacked tips, (2) butterfly valves and tip/base controls for the electric monitor. Monitor sweep is 67.5 degrees outward and 22.5 degrees inward.	$17,892

6300-0052	Monitor TFT electric 1000GPM for ladder (with reduced extension pipe at 2.75" long). Includes shut off valve at tip (VUM) with 2.5" aux discharge valve. Includes tip and base controls. Monitor has a powder coated silver finish. Requires high flow W/W relief vlv.	$13,250
6300-0053	Monitor Akron electric 1250GPM for ladder. Includes tip and base controls. Side sweep limited to 45 degrees.	$10,993
6300-0054	Monitor TFT electric 1250GPM with powder coated silver finish. Includes tip controls, base controls and electric VUM with dual outlets (1) pointed out and (1) pointed in. VUM to be controlled from platform and turntable control consoles.	$13,544
6300-0055	Manual monitor painted silver from OEM. Electric monitor painted job color. Applies to dual monitor platforms only.	$303
6300-0056	Monitor Akron dual for platform. Rated at 2000 GPM on the HP100 Pltfrm. Includes (1) electric monitor with 5178 nozzle, (1) manual monitor with 5170 nozzle, (2) butterfly valves and tip/base controls for the electric monitor. Monitor sweep is 67.5 degrees outward and 22.5 degrees inward at 1500 flow. Greater flows have restricted sweep.	$17,996
6300-0057	Monitor TFT dual electric for platform with powder coated silver finish. 1250 GPM on the 92 Pltfrm and 1500 GPM on the HP95MM and HP100 Pltfrm. Includes (2) electric monitors, (2) manual VUM valves with (1)2.5" gated elbow outlet including 2.5" x 1.5" reducer w/cap, tip/base controls with monitor selector switch. Monitor sweep is 67.5 degrees outward and 22.5 degrees inward.	$21,903
6300-0058	Monitor TFT dual electric for platform with powder coated silver finish. Rated at 1500 GPM on 95-Pltfrm and 2000 GPM on HP100 Pltfrm. Includes (2) electric monitors, (2) VUM valves with (1)2.5" gated elbow outlet including 2.5" x 1.5" reducer w/cap, tip/base controls and monitor selector switch. Monitor sweep is 67.5 degrees outward and 22.5 degrees inward.	$21,903
6300-0059	Monitor Elkhart dual electric for platform. Rated at 2000 GPM on HP100 Pltfrm. Includes (2) electric monitors, (2) butterfly valves, tip/base controls and monitor selector switch. Monitor sweep is 67.5 degrees outward and 22.5 degrees inward.	$23,561
6300-0060	Monitor TFT electric 1250GPM with powder coated silver finish. Waterway rated at 1250gpm with M-ERP2000-NN nozzle. Includes tip controls, base controls and a butterfly valve.	$14,050
6300-0061	Monitor TFT electric 1250GPM for ladder. Includes shut off valve at tip (VUM) with reduced extension pipe at 2.75" long and 2.5" aux discharge valve . Side sweep set at 45 degrees. Includes tip and base controls. Monitor has a powder coated silver finish. Requires 4" waterway discharge and high flow W/W relief vlv.	$12,905
6300-0062	Monitor TFT electric 1500GPM for ladder with a powder coated silver finish. Side sweep set at 45 degrees. Requires 4" waterway discharge. Includes tip and base controls.	$10,993
6300-0063	Monitor TFT dual electric for platform with powder coated silver finish. Rated at 1500 GPM on 95-Pltfrm and 2000 GPM on HP100 Pltfrm. Includes (2) electric monitors w/2000gpm nozzles, (2) VUM valves with (1)2.5" gated elbow outlet including 2.5" x 1.5" reducer w/cap, tip/base controls and monitor selector switch. Monitor sweep is 67.5 degrees outward and 22.5 degrees inward.	$23,094
6300-0064	Monitor TFT Typhoon RC electric w/extended range 1000GPM for ladder. Includes tip and base controls. Monitor has a powder coated silver finish.	$11,294
6300-0068	Monitor TFT electric 1250GPM with powder coated silver finish. Includes tip controls, base controls and manual VUM with dual outlets.	$11,841
6300-0069	Monitor Elkhart Scorpion electric 1500GPM for ladder. Includes tip and base controls. Side sweep limited to 45 degrees.	$12,951
6300-0071	Monitor TFT dual for platform with powder coated silver finish. Rated at 1250 GPM on the 92 Pltfrm and 1500 GPM on the HP95MM and HP100 Pltfrm. Includes (1) electric and (1) manual monitor, (2) manual VUM valves with (1)2.5" gated elbow outlet including 2.5" x 1.5" reducer w/cap, tip/base controls. Monitor sweep is 67.5 degrees outward and 22.5 degrees inward.	$18,173
6300-0072	Monitor Elkhart Cobra EXM 1000GPM for ladder. Includes tip and base controls.	$9,891
6300-0073	Semi-automatic stow upgrade for Elkhart Scorpion monitor on aerial. Includes switch with indicatior light at aerial control console(s).	$558
6300-0074	Monitor Elkhart electric 1000 GPM with ST-195 triple stack tips IPO fog nozzle. Includes tip and base controls.	$9,227
6300-0076	Monitor Akron StreamMaster II electric with SabreMaster nozzle 1250GPM. Includes tip controls, base controls and a butterfly valve. Monitor to have multiple flow ratings based on position.	$11,949
6300-0077	Monitor Akron StreamMaster II w/5177 nozzle electric 1000 GPM for ladder. Includes tip and base controls.	$10,158
6300-0080	Monitor Akron dual StreamMaster II for platform. Rated at 1250 GPM on the 92 Pltfrm and 1500 GPM on the HP95MM and HP100 Pltfrm. Includes (1) electric and (1) manual monitor, (2) butterfly valves and tip/base controls for the electric monitor. Monitor sweep is 90 degrees outward and 22.5 degrees inward. Monitors to have multiple flow ratings based on position.	$16,825
6300-0082	Akron Electric Ladder Pipe style 1494 w/5177 nozzle and wireless remote control. Battery, control modules and power receptacle to be mounted to aluminum plates one each side outside fly.	$15,805
6300-0083	Monitor Akron electric 1250GPM. Includes 2499 stack tips, 3485 steam shaper, tip controls, base controls and a butterfly valve. Applies to HP100 Platform only.	$10,578
6350-0000	Pinned waterway - upgrade. Waterway pins to section 2 or 3 on HP75 / HP78 and pins to section 3 or 4 on HM100 and CR100.	$7,099
6350-0001	Nozzle Guard.	$741
6350-0002	Elkhart 2.5" valve for platform. Valve to be located at the [#LOC].	$1,442
6350-0005	Rear 4" NST waterway inlet for rear mounted aerials. Includes chrome cap.	$979
6350-0006	2.5" Waterway Class 1 pressure gauge 30-0-600. Locate next to waterway inlet.	$189
6350-0007	3.5" Waterway Class 1 pressure gauge. Locate next to waterway inlet.	$214
6350-0008	Waterway shut-off valve. Mounted to allow waterway to be used as a discharge. (Available on 1000 GPM waterway only - N/A with Waterous pumps on 4-jack aerials.)	$1,304
6350-0009	Right side 4" NST waterway inlet for Mid-Mount Boom or Platform. Includes chrome cap.	$1,427

6350-0010	Flowminder with single readout and totalizer for the aerial waterway to be located at the aerial control station.	$2,385
6350-0012	Akron 2.5" valve for platform. Valve to be located at the [#LOC].	$1,590
6350-0014	2.5" chrome elbow with 2.5" x 1.5" reducer and 1.5" cap for platform / ladder discharge valve.	$263
6350-0015	Dual 4" NST waterway inlets for Mid-Mount Platform. Includes chrome caps.	$2,580
6350-0016	Dual 4" NST waterway inlets located (1) each side on trailer gooseneck. Includes chrome 4" caps. Also includes (2) 1.5" drain valves. To be hard piped down low on front corners of trailer body and terminated with a 1.5" MNST adaptor and cap. Outlet to point inward toward frame.	$2,994
6350-0017	4" Waterway inlet valve (PR). Includes 4" Akron ball valves w/handwheel controls and 4" FNST x 5" Storz droop elbows. Locate (1) each side on waterway inlet. Handwheel to be positioned above valve facing forward.	$7,155
6350-0019	2.5" Waterway Class 1 pressure gauge 30-0-400. Locate next to waterway inlet.	$189
6350-0020	Dual read 2.5" Waterway Class 1 pressure gauge (30-0-600 psi/100-0-4140 KPA). Locate next to waterway Inlet.	$189
6350-0021	Dual read 3.5" Waterway Class 1 pressure gauge (30-0-600 psi/100-0-4140 KPA). Locate next to waterway Inlet.	$254
6350-0024	3.5" Waterway Class 1 pressure gauge 30-0-400. Locate next to waterway inlet.	$214
6350-0025	2.5" Noshok Waterway pressure gauge 30-0-600. Locate next to waterway inlet.	$203
6350-0026	2.5" Stainless steel RedHead 45 degree elbow with 2.5" x 1.5" chrome brass reducer and 1.5" chrome brass cap for platform discharge valve.	$431
6350-0027	Auxiliary waterway inlet isolation valve - 4" handwheel controlled Akron. Mounted to allow aux inlet to be connected while flowing waterway from on-board pump.Includes relief valve and bleeder outboard of 4" valve.	$3,740
6350-0028	4" Waterway inlet valve (PR). Includes 4" Akron ball valves w/handwheel controls and 4" FNST x 4" Storz droop elbows. Locate (1) each side on waterway inlet. Handwheel to be positioned above valve facing forward.	$7,007
6350-0029	Rear 4" NST waterway inlet (PR) for rear mounted aerials. Includes 4" Akron handwheel controled shut-off vlvs, relief vlvs and chrome caps. Available only on CR100/92RM and HP100 Platform WOP, inlet replaces small compts at lower rear of body.	$9,819
6350-0031	Auxiliary waterway inlet isolation valve - 4" electric controlled Akron. Mounted to allow aux inlet to be connected while flowing waterway from on-board pump. Includes relief valve and bleeder outboard of 4" valve.	$4,151
6350-0033	Waterway inlet shut-off valve - 4" electric controlled Akron. Mounted below ladder tunnel between torque box and rear of body. Includes relief valve and bleeder outboard of 4" valve. Note: Std aerial relief valve to be located ahead of 4" valve. Applies to rear side staircase style bodies only.	$4,151
6350-0034	3.5" Waterway Class 1 pressure gauge 0 to 300. Locate next to waterway inlet.	$214
6350-0035	2.5" Class 1 Pressure Gauge (30-0-400). Waterway, Color: [#COL]	$230
6350-0036	3.5" Waterway pressure gauge Ashcroft Gauge. Locate next to waterway inlet.	$214
6350-0037	2.5" Waterway Class 1 pressure gauge 0 to 300. Locate next to waterway inlet.	$189
6350-0038	Relief valve Hale P30 for aerial waterway. Required with tip vlv option. For use with three section aerial only.	$966
6350-0039	Akron 2.5" valve for ladder tip. Includes alum manifold and butterfly valve to shut-off monitor. Requires high flow W/W relief vlv. HP78 only.	$2,664
6350-0040	2.5" Waterway Span pressure gauge 30 to 600. Locate next to waterway inlet.	$189
6350-0041	Waterway inlet check valve 4" (PR). Includes bleeder outboard of valve. Locate on driver and officer side.	$1,312
6350-0042	Dual read 3.5" Waterway Class 1 pressure gauge (30-0-400 psi/100-0-2758 KPA). Locate next to waterway Inlet.	$254
6350-0043	Auxiliary waterway inlet isolation valve - 4" electric controlled Akron. Mounted to allow aux inlet to be connected while flowing waterway from on-board pump. Includes bleeder outboard of 4" valve. Control to at the pump operator panel.	$3,713
6350-0044	3.5" Waterway Span pressure gauge 30 to 600. Locate next to waterway inlet.	$216
6350-0045	Pressure gauge Class1 digital for the aerial waterway. Gauge to be located at the aerial turntable control station.	$1,068
6350-0048	Waterway shut-off valve 4" Akron elect model 9313. Mounted to allow waterway inlet to be used as a discharge. Master control to be located adjacent to the auxiliary waterway inlet, slave control located on turntable console.	$4,647
6350-0049	2.5" FNST x 2.5" MCSA Chrome elbow with 2.5" FCSA x 1.5" MNPSH reducer and 1.5" cap for platform / ladder discharge valve.	$263
6350-0050	2.5" Pressure Gauge Dual Read (30-0-600 psi/100-0-4140 KPA). Locate next to waterway inlet Color: [#COL].	$188
6350-0051	2.5" Waterway Class 1 pressure gauge 0 to 300. Locate on aerial turntable console rear facing.	$242
6350-0052	2.5" chrome elbow with 2.5" FNST x 1.5" MNPSH reducer and 1.5" cap for platform / ladder discharge valve.	$258
6350-0054	3.5" Waterway Class 1 pressure gauge 0-400. Locate next to waterway inlet.	$213
6350-0055	Vacuum breaker for waterway.	$356
6350-0056	Waterway shut-off valve - 4" electric controlled Elkhart unibody. Mounted in waterway riser piping.	$4,147
6350-0057	Rear 5" NST waterway inlet for rear mounted high flow aerials. Piping to run on top of torque box and "Y" into waterway pipe below swivel. Includes chrome cap.	$1,499
6350-0058	Rear 5" NST waterway inlet for rear mounted aerials. Includes chrome cap. Requires TB with 5" wway pipe.	$1,499
6350-0059	The rear waterway drain to be controlled by a cable IPOS. Locate control at rear body adjacent to waterway inlet.	$326
6350-0060	3.5" Waterway Class 1 pressure gauge. Locate next to waterway inlet. Color: [#COL].	$231

6350-0061	3.5" Waterway compound pressure gauge (30-0-400). Color: [#COL].	$335
6350-0062	Rear 5" NST waterway inlet with 4" plumbing for rear mounted aerials. Includes chrome cap.	$1,043
6350-0063	Relief valve Hale P40 for aerial waterway IPOS. Required with tip vlv option. For use with four section aerial only.	$1,191
6350-0064	Elkhart 2.5" valve for ladder tip. Includes alum manifold and butterfly valve to shut-off monitor. Requires high flow W/W relief vlv.	$2,664
6350-0065	2.5" Noshok Waterway pressure gauge 0 to 300. Locate next to waterway inlet.	$203
6350-0067	2.5" Innovative Controls stainless steel case pressure gauge (0-400) with color code bezel. Locate next to waterway inlet.	$134
6350-0068	2.5" Innovative Controls stainless steel case dual read pressure gauge (0-2750KPA/0-400PSI) with color code bezel. Locate next to waterway inlet.	$134
6350-0069	2.5" Innovative Controls brass case pressure gauge (0-400) with color code bezel. Locate next to waterway inlet.	$153
6350-0070	4" Innovative Controls stainless steel case pressure gauge (0-400) with color code bezel. Locate next to waterway inlet.	$209
6350-0071	4" Innovative Controls stainless steel case dual read pressure gauge (0-2750KPA/0-400PSI) with color code bezel. Locate next to waterway inlet.	$209
6350-0072	4" Innovative Controls brass case pressure gauge (0-400) with color code bezel. Locate next to waterway inlet.	$299
6350-0073	2.5" Innovative Controls brass case dual read pressure gauge (0-2750KPA/0-400PSI) with color code bezel. Locate next to waterway inlet.	$153
6350-0074	4" Innovative Controls brass case dual read pressure gauge (0-2750KPA/0-400PSI) with color code bezel. Locate next to waterway inlet.	$299
6350-0075	Rear 4" NST waterway inlet for rear mounted aerials to be flush. Includes chrome cap.	$979
6400-0000	Breathing air platform with (2) 300CF cylinders. Includes low air alarm.	$8,501
6400-0001	Breathing air platform with (2) 444CF cylinders. Includes low air alarm.	$9,595
6400-0002	Breathing air platform with (2) 509CF cylinders. Includes low air alarm.	$11,977
6400-0003	Breathing air platform with (1) 444CF cylinder. Includes low air alarm.	$7,198
6400-0004	Breathing air ladder with (1) 300CF cylinder. Includes low air alarm.	$8,275
6400-0005	Breathing air ladder with (2) 300CF cylinders. Includes low air alarm.	$10,119
6400-0006	Breathing air ladder with (1) 444CF cylinder. Includes low air alarm.	$8,390
6400-0007	Fill hose 50' 2250 PSI for 300CF cylinders.	$821
6400-0008	Fill hose 50' 5000 PSI for 444CF cylinders.	$957
6400-0009	Fill hose 50' 10,000 PSI for 509CF cylinders.	$1,174
6400-0010	Additional breathing air outlet at turntable console. Includes filter.	$632
6400-0011	Breathing air outlets additional in platform (PR).	$235
6400-0012	Breathing air ladder with (2) 444CF cylinders. Includes low air alarm.	$11,215
6400-0013	Breathing air platform with (1) 509CF cylinder. Includes low air alarm.	$8,948
6400-0014	Breathing air ladder with (1) 509CF cylinder. Includes low air alarm.	$10,142
6400-0015	Fill hose 100' 5000 PSI for 444CF cylinders.	$1,912
6400-0016	Breathing air outlets, additional (PR) on ladder fly section. These outlets shall be piped from the tip manifold back down to the lower end of the fly where the outlets will be mounted. It will align at the monitor when the ladder is fully extended.	$1,375
6500-0000	Hose box for 50' of 1.75" DJ hose located [#LOC].	$603
6500-0001	Hose box for 50' of 2.5" DJ hose [#LOC].	$608
6500-0011	Pike pole tube for 6' pole on ladder. Location: [#LOC].	$253
6500-0012	Pike pole tube for 8' pole on ladder. Location: [#LOC].	$253
6500-0013	Pike pole tube for 10' pole on ladder. Location: [#LOC].	$253
6500-0014	Pike pole tube for 12' pole on ladder. Location: [#LOC].	$253
6500-0015	Mansaver safety bars mounted at turntable (PR).	$1,689
6500-0016	Lifting eyes on platform (PR). Not available on Bronto.	$305
6500-0017	Lifting arm for Mid-Mount platform.	$567
6500-0018	Stokes basket receiver for use with Ferno Washington Model 71 Stokes on 95 RM platforms. Includes brackets to mount stokes on base of ladder. With a center hosebed or without a pump, the stokes basket shall mount on the right side of the base section opposite the breathing air bottles. With a side hosebed, the stokes basket shall mount on the right side of the base section ahead of the sign plate. Stokes not included.	$1,168
6500-0019	Axe bracket mounted on aerial. For use with a 6 lb. axe only. Location: [#LOC].	$422
6500-0020	Stokes basket receiver for use with Ferno Washington Model 71 Stokes on 95 MM platforms. Stokes not included.	$1,412
6500-0023	Dual rope roller for aerial.	$2,363
6500-0024	Lifting eye at tip of ladder. N/A on HM100 with pinned wway to tip.	$419
6500-0025	Rear hand rail extension (PR) on turntable for center access step on rear of the body. HP75 / HP78 center hose bed only.	$292
6500-0026	Stokes basket receiver for use with Ferno Washington Model 71 Stokes on HP100 platform. Includes brackets to mount stokes to base section right side ahead of sign plate (if equipped). Stokes not included.	$2,030
6500-0027	Lifting eye / tie-off package for HP100 Platform. Includes lifting eyes each side at tip of base and a tie-off point on each turntable trunnion.	$1,908
6500-0028	Rappelling rope guides located each side on front hand rail of platform. HP95 and HP100 Platforms only.	$239
6500-0030	Hard suction storage box (PR) with nylon straps. (1) each side of ladder base section. Outer wall to be used as sign plate. Color: [#COL]	$1,842
6500-0031	Hose box for 10' of 1.75" DJ hose located [#LOC].	$574

6500-0032	Vogel auto lube system for aerial device (up to 8 points). Includes Dia Plt cover w/slot to view grease level.	$2,587
6500-0033	Mansaver safety bars w/o padded cover mounted at turntable (PR).	$1,750
6500-0037	Storage box with hinged lid & butterfly latch for miscellaneous items, rated for 10lb. capacity. Approx size: 8W x 8L x 20D. Box location: [#LOC].	$422
6500-0038	Stokes basket mounting bracket outside base section. Location: left side ahead of sign plate.	$772
6500-0039	Equipment mounting plate 6" W x height of ladder section. Loc: Outboard on right side of fly approx 11" from tip. Permanent mounted equipment not to exceed 5 lbs.	$419
6500-0040	Hose box for 100' of 1.75" DJ hose located [#LOC].	$644
6500-0041	Diamond plate storage box with hinged lid for chain saw. Saw to store with blade extended thru dealer supplied slot in sub floor. Located on officer side of aerial turntable.	$701
6500-0042	Stokes basket mounting bracket outside base section. Location: right side rear of sign plate.	$772
6500-0043	Retaining pin for pike pole storage tube. Pin to prevent pike pole form vibrating out of stored position on ladder section.	$97
6500-0044	Center turntable handrail to flare outward approx 8" to provide additional working space. HP100 SideStacker ladder only.	$1,026
6500-0046	Mask box in platform for two masks. Box is in addition to box supplied with breathing air system.	$406
6500-0048	Turntable handrails - adjustable. Height to be able to be adjusted to allow for low height stations. Provide two settings, approx 2" and 4" lower than std.	$1,014
6500-0049	Lifting eyes each side at tip of base. Rating is 400 lbs ea, 800 lbs pr.	$1,297
6500-0051	Stokes basket mounting bracket outside base section. Location: right side ahead of sign plate.	$772
6500-0052	Stokes basket mounting bracket outside base section. Location: left side rear of sign plate.	$772
6500-0053	Hose box for 25' of 1.75" DJ hose located [#LOC].	$579
6500-0054	Guard for quartz light on front of platform (EA). 1/8" Aluminum plate around top and sides of light.	$211
6500-0055	Lifting eyes each side at tip of base. Rating is 1000 lbs ea, 2000 lbs pr.	$1,297
6500-0057	Left & Right side turntable handrails to flare out to rear, to provide additional working space. HP100 platform with full turntable only.	$1,219
6500-0058	Stokes basket receiver for use with Ferno Washington Model 71 Stokes on HP100 platform. Stokes and base mounting brackets not included.	$1,557
6500-0059	Stokes basket receiver for use with Ferno Washington Model 71 Stokes on HP100 platform. Includes brackets to mount stokes to base section left side ahead of sign plate (if equipped). Stokes not included.	$2,030
6500-0060	Heavy duty safety belt anchor points in platform (6). Anchors to be rated for 300# with a six foot long maximum shock lanyard.	$854
6500-0061	Reducer 3.5"F x 2.5"M with mtg bracket. Locate at tip on right side.	$734
6500-0062	Stokes basket receiver for use with Junkin MIL-8131-WM Stokes on HP100 platform. Includes brackets to mount stokes to base section right side ahead of sign plate (if equipped). Stokes not included.	$2,030
6500-0063	Stokes basket receiver for use with Cascade model CT-PSS1 Stokes on 95 RM platforms. Includes brackets to mount stokes on base of ladder. With a center hosebed or without a pump, the stokes basket shall mount on the right side of the base section opposite the breathing air bottles. With a side hosebed, the stokes basket shall mount on the right side of the base section ahead of the sign plate. Stokes not included.	$1,168
6500-0065	Storage box with hinged lid & butterfly latch for miscellaneous items. Approx size: 6W x 14L x 15D. Box location:right side tip of ladder base.	$551
6500-0067	PAC TRAC postive locking bracket (PR) for 8' pike pole on ladder includes stop plate to prevent the pole from sliding. location: right side of base horizontally mounted behind sign plate.	$339
6500-0068	PAC TRAC postive locking bracket (PR) for 10' pike pole on ladder includes stop plate to prevent the pole from sliding. location: right side of base horizontally mounted behind sign plate.	$339
6500-0069	PAC TRAC postive locking bracket (PR) for 12' pike pole on ladder includes stop plate to prevent the pole from sliding. location: right side of base horizontally mounted behind sign plate.	$339
6500-0070	Diamond plate storage box with hinged lid for chain saw. Box to be approx 33L x 12W x 16D located on right side of aerial turntable. HP100L/CR100/137L/92Pltfrm with full T/T only.	$745
6500-0071	PAC TRAC postive locking bracket (PR) for 12' Boston Rake on ladder. Includes stop plate to prevent the rake from sliding. location: left side of base horizontally mounted behind sign plate.	$339
6500-0072	Guard shall be provided at tip for intercom speaker to protect against damage.	$174
6500-0073	Guard shall be provided at tip for ladder controls to protect against damage.	$174
6500-0074	Axe bracket mounted on aerial. For use with a 8 lb axe only. Location: [#LOC].	$549
6500-0075	Stokes basket mounting bracket for Rescue Tech 1 Model# 620124 outside base section. Location: left side ahead of sign plate.	$772
6500-0076	PAC TRAC positive locking bracket (PR) for storing 10' attic ladder on ladder base includes stop plate to prevent the attic ladder from sliding. Location: right side of base horizontally mounted behind sign plate.	$515
6500-0077	Stokes basket receiver for use with Ferno Washington Model 71 Stokes on 95 MM platforms. Stokes and storage brackets on side of base not included.	$936
6500-0078	Lifting eye at tip of ladder (250lb rating).	$419
6500-0079	Stokes basket receiver for use with Junkin Model MIL-8131-W Stokes on 95 MM platforms. Stokes and storage brackets on side of base not included.	$936
6500-0080	Storage box with hinged lid & butterfly latch for miscellaneous items, rated for 30lb. capacity. Approx size: 5.5W x 18L x 40D. Box location: [#LOC].	$551
6500-0081	Hose box for (2) 50' rolls of 1.75" DJ hose. Position box on platform so vent holes are to the inside IPO outside. Location: [#LOC].	$644

6500-0082	Stokes basket receiver for use with Ferno Washington Model 71 Stokes on 95 RM platforms. Includes brackets to mount stokes to the inside of the aerial sign plate on the right side of the base section. Stokes not included.	$1,677
6500-0083	PAC TRAC positive locking brackets, four (4) for two (2) 8' pike poles on ladder includes stop plate to prevent the pole from sliding. Location: Two (2) brackets right side and two (2) left side of base horizontally mounted behind sign plate for one (1) pike pole each side.	$677
6500-0084	Stokes basket receiver for use with CMC Rescue-CMC Pro Series Model #726112-T1 Stokes basket on HP100 platform. Includes brackets to mount stokes to base section right side ahead of sign plate (if equipped). Stokes not included.	$2,030
6500-0085	Stokes basket receiver only for HP100 platform. Stokes and base mounting brackets not included.	$1,557
6500-0086	Stokes basket storage box for Ferno Washington model 71 stokes on aerial base section. Includes hinged lid with gas springs & notch to clear extension system components. Locate right side on side of base section ahead of sign plate (if equipped). HP100 platform only	$2,301
6500-0087	Stokes basket storage box for Ferno Washington model 71 stokes on aerial base section. Box to be aluminum smooth plate with swirl finish includes hinged lid with gas springs & notch to clear extension system components. Locate right side on side of base section ahead of sign plate (if equipped). HP100 platform only	$2,425
6500-0088	Each jack leg shall include a "NO STEP" label.	$112
6500-0089	PAC TRAC positive locking brackets, four (4) for two (2) 8' pike poles with D-Handles on inside of left side of ladder fly section.	$677
6500-0090	Stokes basket mounting bracket outside base section for Ferno Titan Tapered basket. Location: right side ahead of sign plate.	$772
6500-0091	Diamond plate storage box with hinged lid to outside for Cutters Edge saw. Box to be approx 36" long x 16" wide x 16" deep includes butterfly latch, gas shock hold-open and chrome grab handle. Locate right side of base section forward of sign plate.	$935
6500-0092	Smooth plate aluminum storage box with hinged lid for chain saw. Saw to store with bar extended thru dealer supplied slot in sub floor. Located outside to right rear of platfrom.	$1,702
6500-0093	Pike pole tube for 6' Firehooks NY Roofhook on ladder. Location: [#LOC].	$253
6500-0094	Stokes basket mounting bracket for Tranverse Advantage Basket Model# 11-0125 outside base section. Location: right side ahead of sign plate.	$772
6500-0095	Diamond plate storage box with hinged lid to outside for (1) Cutter's Edge saw or (1) chain saw. Box to be approx 38L x 15W x 16D includes butterfly latch, gas shock hold-upen, chrome grab handle & notch to clear extension system components if applicable. Capacity 25lb. with tag attached to lid. Locate on driver's side of aerial base at tip.	$1,218
6500-0096	PAC TRAC postive locking bracket (PR) for 12' pike pole on ladder includes stop plate to prevent the pole from sliding. location: left side of base horizontally mounted behind sign plate.	$339
6500-0097	Zico QUIC-BAR/Axe mounting bracket MB-B/A less stop. Does not include QUIC-BAR or Axe. Location inside platform IPO axe bracket. HP100 Platform.	$525
6500-0098	PAC TRAC Ironslok Halligan/Axe tool mounting bracket model# K5003. Does not include halligan or Axe. Location inside platform IPO axe bracket. Platform applications only.	$526
6500-0099	Stokes basket receiver for use with Traverse Rescue Titan Tapered SS Stokes (Model# 11-0100) on 95 RM platforms. Includes brackets to mount stokes on base of ladder. With a center hosebed or without a pump, the stokes basket shall mount on the right side of the base section opposite the breathing air bottles. With a side hosebed, the stokes basket shall mount on the right side of the base section ahead of the sign plate. Stokes not included.	$1,168
6500-0100	PAC TRAC positive locking brackets, five (5) for two (2) pike poles, (1) 8' & (1) 12'. Locate both on left side of ladder fly section.	$750
6500-0101	PAC TRAC positive locking brackets, two (2) for one (1) 8' pike pole with D-Handle on inside of left side of ladder fly section.	$330
6500-0102	PAC TRAC positive locking brackets (PR), for one (1) 5' pike pole with D-Handle on inside of right side of ladder fly section.	$330
6500-0103	Stokes basket receiver for use with CMC Rescue-Stainless Steel Rescue Litter Model #726100 Stokes basket on 95 RM platforms. Includes brackets to mount stokes on base of ladder. With a center hosebed or without a pump, the stokes basket shall mount on the right side of the base section opposite the breathing air bottles. With a side hosebed, the stokes basket shall mount on the right side of the base section ahead of the sign plate. Stokes not included.	$1,168
6500-0104	PAC TRAC postive locking bracket (PR) for 6' pike pole on ladder includes stop plate to prevent the pole from sliding. location: right side of base horizontally mounted behind sign plate.	$339
6500-0105	PAC TRAC postive locking bracket (PR) for 8' pike pole on ladder includes stop plate to prevent the pole from sliding. location: left side of base horizontally mounted behind sign plate.	$339
6500-0106	PAC TRAC positive locking brackets, two (2) for one (1) 6' pike pole with D-Handle on inside of right side of ladder fly section.	$330
6500-0107	Tie off eye on outrigger (4). Includes (2) 1" x 2.5" slots on each tie off eye. Locate on pivot side of outer jack tube. Rated at 9000lbs. each. For use with criss cross under slung jacks only. See sketch in File.	$1,558
6500-0108	Aerial turntable handrails shall be removable IPO standard. Includes pin to fix upper removable handrail to lower handrail sleeve permanently attached to turntable.	$484
6500-0109	PAC TRAC positive locking brackets, two (2) for one (1) 6' pike pole on inside of right side of ladder fly section.	$330
6500-0110	Stokes basket receiver for use with Junkin JSA-300CS Stokes on HP100 platform. Includes brackets to mount stokes to base section right side ahead of sign plate (if equipped). Stokes not included.	$2,030

6500-0113	Stokes basket receiver for use with Cascade Rescue Professional Series tapered one piece Titanium litter on HP100 platform. Includes brackets to mount stokes to base section right side ahead of sign plate (if equipped). Stokes not included.	$2,030
6500-0114	Smooth plate w/swirl finish storage box with hinged lid to outside for (1) Cutter's Edge saw or (1) chain saw. Box to be approx 38L x 15W x 16D includes butterfly latch, gas shock hold-upen, chrome grab handle & notch to clear extension system components if applicable. Capacity 25lb. with tag attached to lid. Locate on driver's side of aerial base at tip.	$1,343
6500-0115	Stokes basket mounting bracket outside base section for a Ferno model 71 stokes basket. Location: right side rear of sign plate.	$772
6550-0000	Outrigger warning lights (4). Trucklite Model 60015R.	$213
6550-0001	Outrigger warning lights (PR) LED. Truck-Lite model 91R.	$318
6550-0002	Outrigger warning lights (4) LED. Truck-Lite model 91R.	$632
6550-0003	Whelen 700 Series [#COL] strobe lights on platform (PR). The lights shall be switched with aerial master and located one each side on the [#LOC].	$1,006
6550-0004	Whelen strobe lights at ladder tip (PR) with [#COL] lenses. Switched with aerial master.	$1,015
6550-0009	Whelen 700 Series [#COL] LED lights on platform (PR). The lights shall be switched with aerial master and located one each side on [#LOC].	$668
6550-0010	Outrigger warning lights (PR). Trucklite Model 60015R.	$109
6550-0011	Outrigger warning lights (PR). Weldon Model 1010.	$109
6550-0013	Federal QL64XF LED red warning lights (4). Located down low across front of platform wired to upper level warning lights.	$1,241
6550-0014	Whelen 600 Super LED red warning lights (4). Located down low across front of platform wired to upper level lights.	$1,346
6550-0015	Code3 65R LED red warning lights (4). Located down low across front of platform, wired to the upper level warning lights.	$1,353
6550-0016	Federal QL64XF [#COL] LED warning lights on platform (PR). The lights shall be switched with aerial master and located one each side on [#LOC].	$580
6550-0017	Whelen 600 Super LED [#COL] LED warning lights on platform (PR). The lights shall be switched with aerial master and located one each side on [#LOC].	$633
6550-0018	Code 3 65 [#COL] LED warning lights on platform (PR). The lights shall be switched with aerial master and located one each side on [#LOC].	$598
6550-0019	Outrigger warning lights (PR) LED. Whelen 600 Super LED.	$591
6550-0020	Whelen 500 Series TIR6 Super-LED lights at ladder tip (PR) with red lenses. Switched with aerial master.	$796
6550-0022	LED warning lights on the sides of the platform to be switched with either upper level warning or aerial master warning.	$212
6550-0023	Federal IMPAXX model IPX 302 [#COL] LED lights (4) with clear lenses at ladder tip. Lights located (2) each side, (1) side facing and (1) forward facing. Lights to be synchronized together and switched with aerial master.	$1,136
6550-0025	Whelen 500 Series TIR6 Super-LED lights at ladder tip (PR) with blue lenses. Switched with aerial master.	$796
6550-0026	Whelen 600 Super LED red and blue warning lights (4). Located down low across front of platform alternating red/blue wired to upper level lights.	$1,346
6550-0027	Code 3 model 468 [#COL] LED warning lights with clear lenses on platform (PR). The lights shall be switched with aerial master and located one each side on [#LOC].	$619
6550-0028	Whelen M4RC Super-LED lights at ladder tip (PR) with clear lenses. Switched with aerial master.	$866
6550-0029	Outrigger warning lights (PR) LED. Federal Signal Quadraflare LED.	$593
6550-0032	Whelen M6 Super LED red warning lights (4). Located down low across front of platform wired to upper level lights.	$1,388
6550-0033	Whelen M6 Super LED [#COL] warning lights on platform (PR). The lights shall be switched with aerial master and located [#LOC].	$675
6550-0034	Outrigger warning lights (4) LED. Whelen M9RC red with clear lens.	$2,268
6550-0036	Whelen 600 Super LED [#COL] LED warning lights on platform (PR). The lights shall be switched with upper level warning and located one each side on [#LOC].	$633
6550-0037	Four (4) Federal Signal Qudraflare LED red light heads shall be provided. The rectangular lights shall include chrome flanges. The lights shall be surface mounted on the outrigger covers	$1,184
6550-0038	Whelen 600 Super LED split red/clear warning lights (4). Located down low across front of platform wired to upper level lights.	$1,667
6550-0039	Whelen M6 Super LED red and blue warning lights with clear lens (4). Located down low across front of platform red outboard, blue inboard wired to upper level lights.	$1,388
6550-0040	Additional LED outrigger warning lights (8). Lts to be recessed on inward facing front and rear ends of each outrigger cover.	$355
6550-0041	Outrigger warning lights (4) LED. Whelen M6 Super LED.	$1,349
6550-0042	Warning light Whelen Dominator Plus model DP4ARAR with (4) LINZ6 LEDs Amber, Red, Amber, Red. Location: [#LOC]. The light shall be switched with emergency lighting.	$1,118
6550-0043	Whelen M6 [#COL] Super LED warning light (EA). Location: [#LOC]. The light shall be switched with aerial master power.	$569
6550-0044	Additional LED outrigger warning lights (4). Lts to be recessed on inward facing front and rear ends of each outrigger cover.	$179
6550-0045	Whelen 600 Super LED red warning lights (4) with clear lenses. Located down low across front of platform wired to upper level lights.	$1,346
6550-0046	Federal QL64XFC LED red warning lights (4)with clear lenses. Located down low across front of platform wired to upper level warning lights.	$1,241
6550-0047	Outrigger warning lights (PR) LED. Federal Signal Quadraflare red LED with clear lenses.	$593

6550-0048	Whelen VTC6R Vertex Super-LED lights at ladder tip (PR). Red with clear lenses and chrome bezels. Switched with aerial master.	$530
6550-0049	Whelen M6 series Super LED red warning lights with clear lenses model number M6RC (4). Located down low across front of platform wired to upper level lights.	$1,388
6550-0050	Whelen 500 Series TIR6 Super-LED lights at ladder tip (PR) red with clear lenses. Switched with aerial master.	$796
6550-0051	Whelen 500 Series LIN6 Super-LED lights at ladder tip (PR) with green lenses. Switched with aerial master.	$916
6550-0052	Federal QL64SFC-RB LED split red/blue warning lights (4). Located down low across front of platform wired to upper level warning lights.	$1,402
6550-0054	Whelen M6 Super LED (2) M6R red and (2) M6CC white with clear lens for total of (4) four warning lights. Locate clear lens inboard and red lens outboard down low across front of platform wired to upper level lights.	$1,375
6550-0055	Whelen M6 Series Super-LED lights at ladder tip (PR) with blue lenses. Switched with aerial master.	$860
6550-0056	Whelen 500 Series LIN6 Super-LED lights at ladder tip (PR) with clear lenses. Switched with aerial master.	$916
6550-0057	Whelen VTC6R Vertex Super-LED lights at ladder tip (PR). Blue with clear lenses and chrome bezels. Switched with aerial master.	$530
6550-0058	Outrigger warning lights (PR) LED. Whelen M6 Super LED.	$675
6550-0059	Whelen VTC6R Vertex Super-LED lights at ladder tip (PR). Red with clear lenses and black bezels. Switched with aerial master.	$530
6550-0060	Whelen M6D Super LED red/clear warning lights (4) with clear lenses. Located down low across front of platform wired to upper level lights.	$1,546
6560-0001	Ladder climbing lights. Lens colors shall be [#COL].	$2,532
6560-0002	Spot light 12V located [#LOC].	$419
6560-0003	Flood light 12V located [#LOC].	$419
6560-0004	Collins light FX-12 located [#LOC].	$541
6560-0005	Flood lights Unity at base (PR).	$491
6560-0006	Collins light FX-12 at base (PR).	$1,184
6560-0008	Quartz light 500W with pole platform. Hardwired. Requires 110V twist lock at tip option. The light shall be located [#LOC].	$646
6560-0009	Quartz light 500W at tip. Hardwired. Requires 110V twist lock at tip option. The light shall be located [#LOC].	$344
6560-0010	Quartz light 750W Magnafire model KR1436 platform mounted. Requires 110 volt twistlock receptacle at tip option. Includes hardwired switch on platform console. The light shall be located [#LOC].	$943
6560-0011	Quartz light 750W Magnafire with pole model KR236-S mounted at platform. Requires 110V twist lock receptacle at tip option. The light shall be located [#LOC].	$1,333
6560-0012	Quartz light 750W Magnafire model KR636-S. Requires 110-volt receptacle at tip option. The light shall be located [#LOC].	$1,069
6560-0013	Quartz light 750W Magnafire permanently mounted recessed in the center of the bottom heat shield on the platform. Requires 110 receptacle at tip option. Includes hardwired switch on platform console. Midmount only.	$874
6560-0014	Quartz light 750W Magnafire (PR) permanently mounted recessed in the front corners of the bottom heat shield on the platform. Requires 110 receptacle at tip option. Includes hardwired switch on platform console. Midmount only.	$1,749
6560-0016	Quartz light Fire Research Focus 750W/110V model FCA540-S75-CLP37-ON-SW with 37" pull up pole. The light shall be located [#LOC].	$1,533
6560-0017	Quartz light Fire Research Focus 750W/110V model FCA300-S75 with aerial mount. The light shall be located [#LOC].	$993
6560-0018	Quartz light Fire Research Focus 750W/110V model FCA570-S75-ON without pole. The light shall be located [#LOC].	$1,175
6560-0019	Quartz light Fire Research Optimum 750W/110V model OPA570-S75-ON without pole. The light shall be located [#LOC].	$1,243
6560-0026	Quartz light Fire Research Optimum 750W/110V model OPA540-S75-CLP37-ON-SW with 37" pull up pole. The light shall be located [#LOC].	$1,596
6560-0028	Grille guard for Magnafire light(s) on aerial.	$149
6560-0029	Ladder climbing lights Truck-lite LED. Lens colors shall be [#COL].	$2,844
6560-0030	Grille guard for Optimum light(s) on aerial.	$144
6560-0031	Quartz light 750W Magnafire 5000 model KR656-S. Requires 110-volt twist lock receptacle at tip option. The light shall be located [#LOC].	$1,069
6560-0033	Quartz light Fire Research Focus 750W/110V model FCA200-S75 (PR) permanently mounted recessed in the front corners of the bottom heat shield on the platform. Requires 110 receptacle at tip option. Includes hardwired switch on platform console. Midmount only.	$1,985
6560-0034	Three way switching for quartz light on front of platform to allow light to be controlled from platform console, turntable console or cab. Includes 12v/110v relay and switches at platform and base consoles. Requires add'l 12v switch option in cab.	$693
6560-0036	Quartz light MagnaFire 70W/12V model KR-1331-S low profile permanent mount with angle bracket. Includes switch on light. Location(s): [#LOC].	$1,449
6560-0037	Collins light FX-6 located [#LOC]. No switch at lighthead.	$541
6560-0038	Additional turntable console lights (PR). Locate (1) each side ahead of aerial controls. HP100 platform only.	$103
6560-0039	Additional floor strip light in platform (EA). Location: [#LOC].	$108

6560-0040	Whelen model PSBP12C LED spot light located [#LOC].	$559
6560-0041	Whelen LED model PFBP12C at base (PR).	$1,032
6560-0042	Quartz light 750W Magnafire 5000 model KR1456 platform mounted. Requires 110 volt twistlock receptacle at tip option. Includes hardwired switch on platform console. The light shall be located [#LOC].	$932
6560-0043	Quartz light Fire Research Focus 500W/110V model FCA200-S50 permanently mounted recessed in the center of the bottom heat shield on the platform. Requires 110 receptacle at tip option. Midmount only.	$904
6560-0044	Quartz light Fire Research Optimum 750W/110V model OPA200-S75 recess mount. Includes hardwired switch on platform console. The light shall be located [#LOC].	$1,136
6560-0045	Outrigger flood lights LED (4) IPOS. Truck-Lite model 81380.	$695
6560-0046	Outrigger flood lights LED (2) IPOS. Truck-Lite model 81380.	$348
6560-0048	Collins light FX-HID located [#LOC].	$616
6560-0049	Collins light FX-HID at base (PR).	$1,335
6560-0050	Light Whelen Pioneer Plus model PCP2 flood/spot with pedestal mount. Location(s): [#LOC].	$2,233
6560-0051	Quartz light Fire Research Focus 1000W/240V model FCA570-M12-ON without pole. The light shall be located [#LOC].	$1,251
6560-0052	Quartz light 900W Magnafire with 30" pole model KR239-S mounted at platform. Requires 220V at tip option. The light shall be located [#LOC].	$1,375
6560-0054	Quartz light 12V 70W Magnafire with pole model KR231-S mounted at platform. The light shall be located [#LOC].	$1,561
6560-0057	Outrigger flood lights LED (4). Whelen model PFBS6.	$1,171
6560-0062	Fire Research Evolution 12V LED model FCA570-V15-ON without pole. The light shall be located [#LOC].	$2,012
6560-0065	Whelen model PFBP12C LED flood light located [#LOC].	$516
6560-0066	Light Fire Research Spectra 120V LED model SPA540-K20-CLP37-ON-SW with 37" pull up pole. The light shall be located [#LOC].	$3,025
6560-0067	Light Fire Research Spectra LED 120V model SPA570-K20 permanent mount. Requires 110-volt twist lock receptacle at tip option. Location(s): [#LOC].	$2,567
6560-0068	Light Fire Research Spectra 120V LED model SPA850-K20 with flat mount. Location: [#LOC].	$2,291
6560-0070	Quartz light 750W Magnafire model KR-2656 recess mount. Requires 110 receptacle at tip option. Includes hardwired switch on platform console. The light shall be located center front of platform.	$719
6560-0071	Ladder climbing lights Luma-Bar Pathfinder LED strip (both sides of 3 section ladder). Color: blue.	$7,066
6560-0072	Light Whelen Pioneer Plus model PFP2AC 120V with recess mount. Requires 110-volt receptacle at tip option. Includes hardwired switch on platform console. The light shall be located [#LOC].	$2,465
6560-0073	Light Whelen Pioneer Plus model PFP2AC w/bail mount permanently mounted recessed in the center of the bottom heat shield on the platform. Requires 110-volt receptacle at tip option. Includes hardwired switch on platform console. Midmount only.	$2,324
6560-0074	Whelen model PSBP12C LED spot lights (PR). Located: on the left and right side of aerial base.	$1,115
6560-0075	Federal Signal QL97LEDSCENE LED scene light (EA) with weatherproof connectors. Switch on platform console. Locate [#LOC].	$1,276
6560-0076	Fire Research Evolution 12V LED model FCA300-V15 with aerial mount. Includes hardwired switch on platform console. The light shall be located [#LOC].	$1,804
6560-0077	Ladder climbing lights LED strip (one side of 3 section ladder). Color:[#COL].	$2,590
6560-0078	Ladder climbing lights Luma Bar Pathfinder LED strip for HP75/78 ladder (one side). Color: [#COL].	$3,865
6560-0079	Ladder climbing lights Luma Bar Pathfinder LED strip for HP75/78 ladder (both sides). Color: [#COL].	$7,729
6560-0080	Ladder climbing lights Luma Bar Pathfinder LED strip for 4 section aerial (one side). Color: [#COL].	$4,280
6560-0081	Ladder climbing lights Luma-Bar Pathfinder LED strip for 4 section aerial (both sides). Color: [#COL].	$8,560
6560-0082	Ladder climbing lights Luma Bar Pathfinder LED strip for CR137 (one side). Color: [#COL].	$7,071
6560-0083	Ladder climbing lights Luma Bar Pathfinder LED strip for CR137 (both sides). Color: [#COL].	$14,140
6560-0084	Ladder climbing lights Luma-Bar Pathfinder LED strip for 95-Platform and HP100 Platform (one side). Color: [#COL].	$4,401
6560-0085	Ladder climbing lights Luma Bar Pathfinder LED strip for 95-Platform and HP100 Platform (both sides). Color: [#COL].	$8,802
6560-0086	Quartz light Fire Research Focus 1500W/240V model FCA540-M15-CLP37-ON-SW with 37" pull up pole. [#LOC].	$1,635
6560-0087	Quartz light Fire Research Focus 1500W/240V model FCA570-M15 without pole. Location(s): [#LOC].	$1,463
6560-0089	Light Whelen model PSR00XRR LED (EA) red 3rd brake light. Location: [#LOC].	$189
6560-0090	LED floodlight Whelen Pioneer with pole model KR-SB-2PFP1-W2-S-SL mounted at platform. Switched at lighthead and base console. Lights shall be located: [#LOC].	$1,657
6560-0091	LED floodlight Whelen Pioneer with pole model KR-SB-2PFP2AC-W2-S-SL powder coated black mounted at platform. Requires 110V twist lock receptacle at tip option. The light shall be located [#LOC].	$2,265
6560-0092	Wire guard for FRC Evolution light(s) on aerial. Location: [#LOC].	$144

6560-0093	Light Whelen Pioneer Plus model PFP2AC powder coated black with permanent mount (ROM model KR-SB-6PFP2AC) powder coated black. Requires 110-volt receptacle at tip option. Location(s): [#LOC].	$2,030
6560-0097	Light Fire Research Spectra LED 12V model SPA570-Q20 permanent mount. The light shall be fitted with a weather-resistant switch and hard-wired to the aerial tip power circuit. Location(s): [#LOC].	$2,486
6560-0098	Turntable work lighting shall be upgraded to LED IPOS.	$205
6560-0099	Upgrade (4) inclonometer lights to LED. Grote model G6151.	$60
6560-0101	Aerial turntable control panel EON LED lights IPOS.	$198
6560-0102	Light Whelen Pioneer Plus model PFP2AC with permanent mount. Requires 110V receptacle at tip option. Location(s): [#LOC].	$2,030
6560-0103	Whelen Pioneer PFP2AC 110V LED floodlight with pole mounted at platform. Requires 110V twist lock receptacle at tip option. The light shall be located [#LOC].	$2,558
6560-0104	Light Whelen Pioneer Plus 12V model PFP1P1 with PBAPEDD pedestal mount. Switched at light head and base console. Location(s): [#LOC].	$1,453
6560-0105	Light Whelen Pioneer Plus 120V model PFP1AP1 with PBAPEDA pedestal mount. Requires 110 volt twist lock receptacle at tip option. Location(s): [#LOC].	$1,609
6560-0106	Quartz light Fire Research Spectra 12V LED model SPA260-Q15 with surface mount and on/off sw on platform console. The light shall be located [#LOC].	$1,862
6560-0107	Light Fire Research Spectra 120V LED model SPA540-K20-CLP37-ON-SW with 37" pull up pole powder coated black. The light shall be located [#LOC].	$3,075
6560-0108	Light Fire Research Spectra 120V LED model SPA850-K20 with flat mount powder coated black. Location: [#LOC].	$2,340
6560-0109	Quartz light Fire Research Spectra 12V LED model SPA260-Q15 with surface mount powder coated black and on/off sw on platform console. The light shall be located [#LOC].	$1,912
6560-0110	Ladder climbing lights Federal Signal MicroPulse6 LED for 4 section aerial (one side). Color: [#COL].	$3,681
6560-0111	Quartz light 500W Magnafire 5000 model KR655-S. Requires 110-volt twist lock receptacle at tip option. The light shall be located [#LOC].	$881
6560-0112	Flood lights Whelen 12V PFP1 at base (PR) with pedestal mount.	$3,178
6560-0113	Light Whelen Pioneer Plus 120V model PFP1AP1 with PBAPEDA pedestal mount located at tip of base section (PR). Requires 110 volt twist lock receptacle at tip option.	$3,317
6560-0114	Luma Bar Pathfinder 20" LED strip to illuminate aerial pedestal's control panel. Applies only to diamond plate turntable consoles.	$1,132
6560-0115	Light Fire Research Spectra LED 12V model SPA540-Q15-CLP37-ON-SW with 37" pull up pole. The light shall be located [#LOC].	$2,458
6560-0116	Light Whelen Pioneer Plus 120V model PSP1AP1 with PBAPEDA pedestal mount. Requires 110 volt twist lock receptacle at tip option. Location(s): [#LOC].	$1,821
6560-0117	Light Fire Research Spectra 12V LED model SPA540-Q15-CLP37-ON-SW with 37" pull up pole powder coated black. The light shall be located [#LOC].	$3,075
6560-0118	Light Rigid Industries 12V E2-Series 20" LED. Includes aluminum plate shield. Switched at turntable console. N/A with lifting eye at tip. Location: mounted below aerial at tip of fly section.	$1,715
6560-0119	Light Rigid Industries Spot/Flood 12V E-Series 10" LED (PR). Includes aluminum plate shields. Switched at turntable console. Location: One each side at tip of fly section mounted parallel to main rail facing down.	$1,494
6560-0120	Flood lights Whelen Micro Pioneer model MPBW at base (PR).	$1,490
6560-0121	Light Whelen Pioneer Plus model PFP1AC w/bail mount permanently mounted recessed in the center of the bottom heat shield on the platform. Requires 110-volt receptacle at tip option. Includes hardwired switch on platform console. Midmount only.	$1,902
6560-0122	Ladder climbing lights Luma-Bar Pathfinder LED strip for 4 section aerial (both sides). Color: Blue (base, 2nd & 3rd, fly)/Amber fly section from folding steps to tip.	$10,156
6560-0123	Whelen LED model PFBP12C at tip of base (PR).	$1,032
6560-0124	Whelen Pioneer PFP1AC 110V LED floodlight with pole mounted at platform. Requires 110V twist lock receptacle at tip option. The light shall be located [#LOC].	$1,872
6560-0125	Flood/Spotlight Whelen PCP2AC 110V with external mount 30" tripod telepole. Includes 110V 20A twistlock receptacle. Location(s): [#LOC]	$3,363
6560-0126	Marker lights additional amber LED Trucklite Model 35 (PR). Location: [#LOC]	$155
6560-0127	FireTech model FT-WL3500-FT LED flood/spot light. Includes hardwired switch on turntable console. Location: left and right side of base section.	$1,339
6560-0130	Whelen Pioneer PFP2AC 110V LED floodlight with pole mounted at platform powder coated black. Requires 110V twist lock receptacle at tip option. The light shall be located [#LOC].	$2,558
6570-0003	110V/15A twist lock receptacle at tip.	$2,704
6570-0007	Intercom Speaker - additional located at the monitor.	$683
6570-0008	Intercom aerial 2-way. Atkinson Dynamics (Federal). Speaker to be located to rear of platform on Bronto units.	$1,511
6570-0009	Intercom aerial 3-way. Atkinson Dynamics (Federal). Speaker to be located to rear of platform on Bronto units.	$3,027
6570-0010	Aerial Information System (AIS) for ladder.	$7,380
6570-0011	Aerial Information System (AIS) for ladder. Includes engine information.	$8,211
6570-0012	Aerial Information System (AIS) for platform.	$9,640
6570-0013	Aerial Information System (AIS) for platform. Includes engine information.	$10,825
6570-0014	Class1 aerial information center.	$3,612
6570-0015	110V/20A twist lock receptacle at tip.	$2,704
6570-0017	Duplex receptacle at tip with (1) 3-prong NEMA 5-15 and (1) twist lock NEMA L5-15 receptacle.	$2,749

6570-0018	Extension alarm for aerial. Alarm to sound at turntable console when aerial is near full extension.	$541
6570-0019	Platform floor lights additional (4). Lights to match standard floor lights.	$231
6570-0021	Duplex receptacle at tip with 3-prong NEMA 5-15 outlets.	$2,749
6570-0022	Air horn switch at aerial turntable control console. Switch to be labeled "Air Horn".	$134
6570-0023	Firepower receptacle at tip.	$2,735
6570-0024	Laser jack pad spotting lights (4).	$4,454
6570-0026	Laser jack pad spotting lights (2).	$2,451
6570-0028	Air horn switch at aerial turntable control console. Switch to be a red button type and be labeled "Air Horn".	$134
6570-0029	Light with alarm on turntable console for low eng oil press, high water temp, low voltage and low air press.	$342
6570-0030	110V/20A duplex household receptacle at tip.	$2,704
6570-0032	Aerial Information System (AIS) for ladder. Includes engine information. System will not display extension or available tip load due to temporarily disconnected pull encoder. To be reconnected once updated HP78 software is loaded into system.	$8,211
6570-0033	Air horn switch at aerial turntable control console. Switch to be labeled "Evacuation Alert".	$134
6570-0034	Additional 110V/20A twist lock receptacle at tip. Requires 110v to tip option. Location: opposite standard at tip.	$312
6570-0035	110V/15A twist lock receptacle at tip. Wiring from breaker box to tip to be 220V.	$2,808
6570-0036	Akron 9313 auxiliary waterway discharge vlv control on turntable console. Requires waterway discharge with Akron electric valve and three available collector rings.	$1,159
6570-0038	Cradle alignment light on turntable console.	$527
6570-0039	110V/20A twist lock receptacle at tip. Wiring from breaker box to tip to be 220V.	$2,808
6570-0040	110V/30A twist lock receptacle at tip.	$2,808
6570-0041	110V receptacle at tip to be mounted outboard of inside working area of fly section to provide clear space inside fly section.	$118
6570-0042	120V/250V 20A Daniel Woodhead Non-NEMA model 67W08 receptacle at tip.	$3,081
6570-0043	110V/20A twist lock receptacle at tip. Receptacle power is provided via inlet receptacle (not generator/breaker box). Includes a [#COL] cover. Location: [#LOC].	$2,808
6570-0044	Aerial information displays located at TT and platform console.	$3,612
6570-0045	Switch at aerial turntable control console to disable flashing light at aerial tip. Switch to be labeled "Flashing Light".	$134
6570-0046	12 VDC junction box located outside of platform near the breathing air block (no outlet, power source only). This 12 VDC circuit shall be activated with aerial master.	$304
6570-0047	(2) 110v circuits to tip. (1) with a 20A twist lock recept in platform and (1) to supply power to quartz lights. Both to include 15A breakers. Aramco Bronto only.	$2,704
6570-0048	(2) 110v circuits to tip. (1) with a 20A household recept in platform and (1) to supply power to quartz lights. Both to include 15A breakers. Aramco Bronto only.	$2,704
6570-0049	Additional 110V/20A household receptacle at tip. Requires 110v to tip option. Location: opposite standard at tip.	$312
6570-0050	Aerial Information Center (AIC) for 95-Platform and HP95MM.	$3,838
6570-0051	110V/15A Hubble twist lock receptacle at tip. Includes grey weatherproof cover.	$2,704
6570-0052	12 volt power point wired battery hot at tip.	$58
6570-0054	Deadman foot switch at turntable for aerial controls.	$295
6570-0055	Additional programming instructions: momentary laser jack pad switch to be provided with 30 second timer.	$242
6570-0056	Additional rung alignment light. Whelen model 3SA00FAR amber light. Locate on aerial control panel where intercom controls typically mount.	$259
6570-0058	12 Volt connector at ladder tip for Akron electric ladder pipe.	$80
6570-0059	Q2B switch at aerial turntable control console. Switch to be labeled "Evacuation Alert".	$134
6570-0060	Reel at tip of base for providing power to ladder tip.	$4,486
6600-0000	Folding ladder bracket. Locate inside the right side fly section for a FL-10.	$571
6600-0001	Slide out roof ladder bracket. Locate outside base section for a [#LOC]. Available on 95RM, 110, CR100 and HM100.	$1,736
6600-0002	Roof ladder bracket J style mount. Locate outside base section for a [#LOC]. Available on HP75/78, HP100, and HP95.	$1,788
6600-0003	Roof ladder bracket lift out. Locate inside the left side fly section for a PRL-12. Avail on 95-Platform, 95MM and HP100 Platform.	$328
6600-0004	Lift out style roof ladder bracket. Locate outside base section for a [#LOC]. Available on 95RM, 110, CR100 and HM100.	$1,736
6600-0005	Roof ladder bracket lift out. Locate inside the left side fly section for a PRL-14. Avail on 95-Platform, 95MM and HP100 Platform.	$328
6600-0006	Roof ladder bracket lift out. Locate inside the left side fly section for a PRL-16. Avail on 95-Platform, 95MM and HP100 Platform.	$328
6600-0008	Roof ladder bracket lift out. Locate inside the left side fly section for a 775A-12. Avail on HP100P, 95RM and 95MM.	$328
6600-0009	Parapet roof ladder bracket for platform. For use with Alcolite and Duo Safety roof ladders (not included). Available on HP100 Pltfrm only.	$1,800
6600-0010	Parapet roof ladder bracket for platform. For use with Alcolite and Duo Safety roof ladders (not included). Available on HP95 MM Pltfrm only.	$1,800
6600-0011	Roof ladder bracket lift out. Locate inside the right side fly section for a 775A-10. Avail on HP100P, 95RM and 95MM.	$328

6600-0012	In addition to the lift-out ladder bracket in the fly section a guard plate shall be installed on the inside of the fly section. To guard against the roof ladder hooks from accidently following into the ladder fly structure when the aerial is extending or retracting.	$138
6600-0013	Roof ladder bracket lift out. Locate inside the right side fly section for a PRL-14. Avail on 95-Platform, 95MM and HP100 Platform.	$328
6750-0000	Aerial sign plates 10 x 144 (PR). Available on Booms, HP75 and HP100 only. Does not include lettering. Color: [#COL].	$1,468
6750-0001	Aerial sign plates 16 x 144 (PR). Available on HP95, HP100L and HP100P only. Does not include lettering. Color: [#COL]	$1,648
6750-0002	Aerial sign plates 22 x 144 (PR). Available on HM100, HM110, 95, CR100 and CR137 only. Does not include lettering. Color: [#COL].	$1,827
6750-0004	Aerial sign plates 12 x 144 (PR). Available on HP78, HP100 and HP100 platform only. Does not include lettering. Color: [#COL].	$1,529
6750-0006	Aerial sign plates 16 x 144 driver and 12 x 144 officer. Does not include lettering. Color: Job color.	$1,688
6750-0007	Sign plate for rear of aerial turntable handrails. To be two piece painted smooth aluminum plate split in the center and hinged on each side. Does not include lettering. Color: [#COL]	$773
6750-0009	Aerial sign plates 10 x 168 (PR). Available on HP75/78. Does not include lettering. Color: [#COL]	$1,714
6750-0010	Brackets for 22" x 144" aerial sign plate. For use with roof ladder bracket on opposite side. Available on aerials with aerial external extension system.	$1,580
6750-0011	Aerial sign plates 22 x 144 (PR) un-painted. Available on HM100, HM110, 95 and CR100 only. Does not include lettering.	$1,568
6750-0013	Sign plate for rear of aerial turntable handrails. Single piece un-painted smooth aluminum plate. Does not include hinges or lettering.	$470
6750-0014	Brackets to allow for a 16" x 144" aerial sign plate on a HP100 Platform. Requires roof ladder bracket on opposite side. Does not include sign plates.	$244
6750-0015	Aerial sign plate / hard suction hose storage box pkg. Includes a 12 x 144 sign plate on left side of base and a hard suction storage box with nylon straps on right side of base. Outer wall of box to be used as sign plate. Does not include lettering. Color: job color.	$1,731
6750-0016	Aerial sign plates 16 x 120 (PR). Available on HP95 only. Does not include lettering. Color: [#COL]	$1,588
6850-0002	Pump panel control station. HP75 / HP78 and 50' rear mount boom.	$3,471
6850-0003	Ladder tip controls.	$10,245
6850-0004	Short Jack System HP75 / HP78.	$8,131
6850-0005	Lock for ladder controls. 50/HP75/HM100/HP100/CR100/110 only.	$259
6850-0006	Additional handheld jack controller at rear of body. Locate in rear jack control box. Includes selector switch at aerial master panel.	$2,242
6850-0008	Platform leveling system to allow adjustment of platform pivot angle from cab. Includes light on back of platform visible by driver to indicate platform is in alignment with ladder.	$2,369
6850-0009	Hinged cover for platform control console. Diamond plate with rubber hood latch to hold closed.	$415
6850-0010	Connector for handheld jack control at rear of body. Loc: [#LOC]	$502
6850-0011	Gas spring for aerial ladder console cover. To hold cover open at 90 degrees to the side.	$166
6850-0012	Hinged cover for platform control console. Swirl finish smooth plate with gas spring hold-open.	$516
6850-0014	Aerial control station (add'l) located at pump operator's panel. Includes upgrade to elect / hyd aerial control system and monitor controls at pump panel.	$12,960
6850-0015	Aerial turntable console lowered approx 4" to allow for stations with arched doors.	$878
6850-0017	Envelope controls HP100 Platform. Forward extension of aerial to be restricted due to 260" wheelbase.	$662
6850-0019	Vinyl platform console control cover. Color: [#COL].	$246
6850-0020	Aerial control stations (add'l) located at pump operator's panel and ladder tip. Includes upgrade to elect / hyd aerial control system and monitor controls at pump panel. Tip controls to be "creep" style.	$15,790
6850-0021	Additional handheld jack controller at front of cab. Locate in front bumper officer side tray. Includes selector switch at aerial master panel.	$2,242
6850-0023	Retraction stops for ladder. Required to allow for nozzle guard on HP75/78 with 225-230 WB S/A and all T/A.	$468
6850-0024	Handheld jack controller at rear of body. Locate in rear jack control box. This is in addition to standard aerial master panel also at rear of body.	$1,864
6850-0025	Advanced Aerial Control System - Ladder. Includes monitor stow / deploy, cradle alignment lt and display with flowmeter.	$13,565
6850-0027	Ladder tip controls. For use with AACS only.	$1,929
6850-0028	Ladder controls at pump panel. For use with AACS only.	$2,855
6850-0029	Short Jack System HP75 / HP78. For use with AACS only.	$4,481
6850-0032	Advanced Aerial Control System - Ladder. Includes cradle alignment lt and display.	$12,200
6900-0000	Aerial flow test - 3rd party.	$437
6900-0002	Aerial 2009 NFPA Certification.	$3,510
6900-0004	Aerial 2009 NFPA Certification. Performed by UL.	$7,384
6900-0005	Aerial flow test - 3rd party.	$437
6900-0006	Aerial flow test - 3rd party.	$437
7000	**Loose Equipment**	
7000-0003	Akron Brass stacked tips w/stream shaper. Base style 3485 & Stacked Tips style 3499.	$594
7000-0007	Mercury Quick Attack Monitor 2.5" NH x 2.5" NH monitor, with 4447 nozzle, and mounting bracket.	$3,512
7200-0000	Adapter Chrome 3"MNST x 2.5"FNST with Plug	$199
7200-0001	Adapter Chrome 3"FNST x 2.5"MNST with Cap.	$229
7200-0002	Swivel Chrome Connector 4.5"FNST x 2.5" FNST Long Handle	$230

7200-0003	Chrome Swivel Connection 5"FNST x 2.5"FNST Long Handle	$318
7200-0004	Chrome Swivel Connector 5"FNST x 4.5"FNST Long Handle	$342
7200-0005	Chrome Swivel Connector 6"FNST x 4.5"FNST Long Handle	$434
7200-0006	Discharge Adapter 2.5"FNST x 2.5"MNST Spec with Cap - Special adapter with specified thread.	$140
7200-0007	Adapter 2.5"MNST x 2.5"FNST Spec with Plug - Special adapter with specified thread.	$175
7200-0008	Adapter Wye 2.5"FNST x 1.5"MNST.	$550
7200-0009	Adapter Wye 4"FNST x (2) 2.5" FNST	$704
7200-0010	Adapter 2.5" FNST x 2.5" F British Instantaneous.	$199
7200-0011	Adapter 2.5" MSNT x 2.5" M British Instantaneous.	$150
7200-0012	Adapter Collector 5"FNST x (3) 2.5"M British Instantaneous.	$770
7200-0013	Adapter Collector 6"FNST x (3) 2.5"M British Instantaneous	$895
7200-0014	Adapter 2.5"FNST x 4" Storz	$337
7200-0015	Adapter 3"FNST x 4" Storz with cap.	$353
7200-0016	Adapter 3"FNST x 5" Storz and insert cap.	$433
7200-0017	Swivel connector 5"FNST x 4" Storz with tethered Cap.	$414
7200-0018	Swivel Connector 4" FNST x 4" Storz with Tethered Cap.	$312
7200-0019	Swivel connector 4"FNST x 5" Storz with tethered cap.	$393
7200-0020	Swivel connector 5"FNST x 5" Storz with tethered cap.	$475
7200-0021	Swivel Connector 6" FNST x 4" Storz with Tethered Cap.	$454
7200-0022	Swivel Connector 6" FNST x 5" Storz with Tethered Cap.	$491
7200-0023	Swivel Connector 3" FNST x 4" Storz 30 Degree Elbow with Tethered Cap.	$480
7200-0024	Swivel Connector 3"FNST x 5" Storz 30 Deg Elbow with Tethered Cap.	$598
7200-0025	Swivel Connector 4"FNST x 4" Storz 30 Deg Elbow with Tethered Cap.	$327
7200-0026	Swivel Connector 4" FNST x 5" Storz 30 Deg Elbow with Tethered Cap.	$403
7200-0027	Adapter 2.5"MNST x 2.5" Storz with 30 degree droop and insert cap.	$153
7200-0028	Adapter 5" FNST x 5" Storz 30 degree with tethered cap.	$266
7200-0029	Adapter Wye 5"FNST x (2) 2.5" FNST	$782
7200-0030	Adapter, 5" FNPT X 6" MNST Chrome.	$244
7200-0031	1.5" Chrome Cap w/Chain.	$18
7200-0032	Adapter 2.5"FNST x 2.5" Storz. Includes cap and connector.	$151
7200-0034	Adapter Wye 4.5"FNST x (2) 2.5" MNST	$738
7200-0035	Adaptor 30 degree for rear 2.5" discharge. To be 2.5" FNST x 2.5" MNST. Ship loose.	$192
7200-0036	Intake 6" Elkhart Elk-O-Lite 9786 Piston Valve. Ship Loose.	$1,996
7200-0043	Intake 6" Northline FSGR Piston Valve with intake Relief. ship loose	$1,160
7200-0044	Adapter.75 FGHT (garden hose) x 1.5" Storz	$86
7200-0045	Intake gated relief valve. 6"FNST x 6"MNST.	$1,010
7200-0046	Swivel Pyrolite connector 2.5"FNST x 2.5" FNST locker lug.	$97
7200-0047	Adapter Pyrolite 2.5"MNST x 2.5"MNST.	$54
7200-0048	Chrome Swivel Connector 6"MNST x 4"FNST	$623
7200-0053	Adapter Pyrolite 2.5"FNST x 2.5"FNST Swivel	$93
7200-0054	Adapter wye suction 6"FNST x (3) 2.5" FNST	$1,722
7200-0055	Adapter 2.5" MNST x 2.5" FBritish Instantaneous	$112
7200-0056	Adapter 2.5FNST x 2.5M (3.031x7Tip) with Cap	$185
7200-0057	Adapter 2.5MNST x 2.5F Swivel X (3.031X7TPI) with Plug	$191
7200-0058	Adapter 2.5FNST x 2.5M (3.232x5Tip) with Cap	$185
7200-0059	Adapter 2.5MNST x 2.5F Swivel (3.232x5Tip) with Plug	$191
7200-0060	Adapter 2.5MNST x 2.5F (3.230x5Tip) with Cap	$185
7200-0061	Adapter 2.5MNST x 2.5F Swivel (3.230x7TPI) with Plug	$191
7200-0062	Adapter 4.5" FNST x 5" Storz.	$229
7200-0064	Swivel Connector 4"FNST x 4" Storz 30Deg Elbow with Tethered Cap	$484
7200-0065	Adapter Connector 3"MNST x 4" Storz with Tethered Cap	$343
7200-0066	Adapter Gated Wye Akron Model 1480 with 1.5"FNST x (2) 1.5"MNST.	$684
7200-0068	A 2.5" MNST x 2.5" FAMA with Plug Adapter	$72
7200-0069	A 2.5" FNST x 2.5" MAMA With Cap adapter shall be provided.	$102
7200-0071	Adapter 1.5" FNST X 1.0" MNST w/Cap.	$85
7200-0074	Swivel Connector 6"FNST x 5" Storz with 30 degree elbow and Tethered Cap	$494
7200-0078	Adapter 1.5 FNST x 1.5 Storz for foam fills.	$107
7200-0079	Swivel Chrome Connector 4"FNST x 2.5" FNST Long Handle	$153
7200-0080	Swivel Rocker Lug Connector 6"FNST x 5" Storz with Tethered Cap	$494
7200-0081	Swivel Connector 4"FNST x 4" Storz 30Deg Elbow without Tethered Cap	$332
7200-0082	Adapter 2.5"MBCT w/cap x 4" Storz	$285
7200-0083	Adapter 2.5"FBCT w/plug x 4" Storz	$297
7200-0084	Adapter 1.5" FNST x 1.5" MNSH.	$53
7200-0085	Swivel Connector 3"MNST x 5" Storz 30Deg Elbow with Tethered Cap	$514
7200-0086	Adapter Chrome 3"FNST x 2.5"MNST	$219
7200-0087	Swivel Connector 6"FNST x 5" Storz 30 deg Elbow with Tethered Cap. (Task Force Tip Adapt)	$566
7200-0088	Chrome Swivel Connector 6"FNST x 4"FNST Long Handle	$434
7200-0089	Swivel Connector 3"MNST x 4" Storz 30Deg Elbow with Tethered Cap	$322
7200-0090	Adapter 2.5" female NST x 2.5" male British Instantaneous with cap	$110
7200-0091	Adapter 2.5" female NST x 2.5" Male Detroit standard threads.	$102
7200-0092	Cap 2.5" Detroit Standard Threads.	$74
7200-0093	A 2.5" MNST x 2.5" FDetroit Standard with Plug Adapter.	$154
7200-0094	Adapter 1.5" Female NST x 1" Male Mass Forestry Threads. (1.429 OD-11 threads per inch)	$60
7200-0095	Akron 7980 Piston Intake Valve with 5" Storz outlet.	$2,195

7200-0096	Akron 7980 Piston Intake Valve with 4" Storz outlet with cap.	$1,735
7200-0098	A 2.5" MNST x 5" FNST with 5" Plug Adapter.	$497
7200-0101	Adapter 2.5FNST x 2.5M British Columbia Threads (BCT 3.00x8Tip) with Cap.	$179
7200-0102	Adapter 2.5MNST x 2.5F Swivel British Columbia Threads (BCT 3.00x8TPI) with Plug	$354
7200-0103	Inlet valve gated w/relief and elbow. 4"FNST x 4" STORZ and cap. (Kocheck Model 40K40204)	$2,269
7200-0104	Adapter 5" FNST x 4" MNST with cap.	$275
7200-0105	Elkhart 18" Pipe Extender 8298EXw/8298.	$520
7200-0106	Adapter 1.5 FNST x 1.5 Storz.	$107
7200-0107	Adapter aluminum 3"FNST x 2.5"MNST with Cap.	$229
7200-0108	Adapter 4" FNST x 5" Storz.	$229
7200-0109	Adapter, 4.5" FNST X 4.5" MNST Chrome.	$335
7200-0110	Adapter 2.5" female NST x 2.5" male 3.187 x 6 thread per inch with cap	$148
7200-0111	Adapter 2.5" female NST x 2.5" male Cleveland 3.078 x 8TPI with cap.	$180
7200-0112	Adapter 2.5MNST x 2.5F Swivel (Cleveland 3.078 x 8TPI) with Plug	$370
7200-0114	Chrome adapter for 2.5" discharge. Includes 2.5" FNST x 1.5" NH thread without cap.	$52
7200-0115	Swivel Connector 6"FNST x 4" Storz with 30 degree elbow and Tethered Cap	$494
7300-0000	Reducer Chrome 2.5"FNST x 1.5"MNST.	$70
7400-0000	Chrome Intake elbow 2.5" MNST 45Deg	$185
7400-0001	Chrome discharge elbow 3"FNST x 2.5"MNST 45 Deg	$246
7400-0002	Chrome suction elbow 3"MNST x 2.5"FNST 45Deg	$246
7400-0003	Chrome discharge elbow 3" 30 Degree.	$230
7400-0004	Elbow 30 degree chrome swivel w/2.5"FNST x 2.5"MNST.	$70
7400-0005	Chrome discharge elbow 2.5", 45 degree.	$185
7400-0006	Chrome discharge elbow 2.5" FNST X 2.5" MCSA 45Deg chrome	$185
7400-0007	Chrome discharge elbow 2.5" FCSA X 2.5" MCSA 30Deg chrome	$213
7400-0008	Chrome discharge elbow 3.0" FNST X 2.5" MCSA 30Deg chrome.	$251
7400-0009	Chrome Elbow 4" MNST X 4" FNST W/Plug.	$456
7400-0010	Chrome discharge elbow 4" 30 Degree.	$444
7400-0011	Chrome Intake elbow 2.5" MNST x 2.5" Female 3.187 x 6 thread per inch with a 2.5" Male 3.187 x 6 thread per inch chrome plug with chain, 45 Degree	$237
7400-0012	Chrome discharge elbow 2.5" FNST x 2.5" Male 3.187 x 6 thread per inch with a 2.5" Female 3.187 x 6 thread per inch chrome rocker lug cap with chain, 45 Degree.	$226
7500-0000	Ziamatic Air Pack Bracket (2PHS) Model #UN-6-30-2PHS. Shipped loose.	$301
7500-0001	Ziamatic Air Pack Bracket (FPHS) Model #UN-6-30-3-FPHS. Shipped loose.	$306
7500-0002	Universal air pack bottle bracket (EA). Shipped loose.	$147
7500-0004	Bracket SCBA Lifeguard SmartDock Gen2 restraint system. Ship Loose.	$475
7550-0000	ABC Extinguisher 10# w/Bracket.	$160
7550-0001	ABC Extinguisher 12# w/Bracket	$252
7550-0002	Extinguisher, 15# CO2 w/bracket.	$426
7550-0003	Extinguisher, ABC 20# dry chemical w/bracket. Amerex model A411	$235
7550-0004	Extinguisher 2.5 Gallon Water Pressure w/Bracket. Amerex model A240	$187
7550-0005	Extinguisher 15.5# Halotron with Vehicle Bracket	$578
7550-0006	ABC Extinguisher 20# ABC w/Bracket. Mount bracket to floor just inside the interior on the officer's side rear of 30# extinguisher.	$166
7550-0007	Amerex Extinguisher 30# DryChem w/Bracket. Mount bracket to floor just inside the interior on the officer's side forward of 20# extinguisher.	$642
7550-0008	Extinguisher, ABC 20# dry chemical w/bracket. Location: [#LOC].	$235
7600-0000	Axe bracket - shipped loose.	$94
7600-0001	Flat Head Axe 6 lb.	$60
7600-0002	Pick Head Axe 6#.	$75
7600-0003	Flat Head Axe 6# with Fiberglass Handle.	$129
7600-0004	Pick Head Axe 6# with Fiberglass Handle.	$133
7600-0005	Pike Pole Fiberglass 6'.	$135
7600-0006	Pike Pole Fiberglass 8'.	$89
7600-0007	Pike Pole Fiberglass 10'.	$171
7600-0008	Pike Pole Fiberglass 12'.	$180
7600-0009	Pike Pole Mounting Tube Style (Each)	$215
7600-0013	Hooligan Tool 36".	$270
7600-0014	Hooligan Tool Bracket (Each).	$157
7600-0015	Wheel Chocks 32" NFPA Compliant - Pair of Zico AC-32. Up to 32" diameter Tires. Includes mounting bracket.	$451
7600-0016	Wheel chocks 44" NFPA compliant, pair (PR) of Zico SAC-44. Up to 44" diameter tires. Includes mounting brackets.	$508
7600-0017	Collins CL-12-M hand held spotlight (shipped loose)	$448
7600-0018	Adjustable combination hydrant spanner wrench.	$81
7600-0019	Spanner Wrench (2) #10 with Holder.	$168
7600-0024	Crow Bar 36".	$18
7600-0025	Crow Bar 50".	$125
7600-0026	Crow Bar 60".	$51
7600-0027	Bracket for Crow Bar (Each)	$232
7600-0028	Cable Cutter Insulated 24"	$254
7600-0029	Bolt Cutter 24".	$73
7600-0030	Bolt Cutter 36".	$508
7600-0031	Bracket for Cutter (Each)	$67

7600-0033	Rescue Knife w/(6) Blades and (2) Keys ARFF.	$147
7600-0034	Claw Tool 43"	$317
7600-0035	Jack Hydraulic 5 Ton	$84
7600-0037	Wheel Chocks Aluminum Zico AC-32 with mounting brackets.	$276
7600-0038	Salvage Cover 12' x 18'.	$316
7600-0039	Tool Roll Canvas w/o Tools	$417
7600-0042	Booster Hose Spanner Wrench	$44
7600-0043	First Aid Kit 24 Unit	$136
7600-0044	First Aid Kit 36 Unit.	$265
7600-0045	Shovel Plain	$87
7600-0046	Emergency Rope 125' .625 Diameter.	$180
7600-0047	Emergency Rope 125' .75 Diameter	$192
7600-0048	Pompier Belt (Each)	$289
7600-0049	Chain Saw 20 inch bar Gas powered.	$852
7600-0053	Wheel Chocks Alum HGS Heavy Includes Brackets.	$283
7600-0056	Plastic Tool Box 9.75" x 12.5" x 20" - FAA 10C Requirements for ARFF/Fire Trucks.	$67
7600-0057	Wrench lug 2pc - lug wrench in two (2) pieces. Lug ends are 1.5" and 1.312" (BRT19951) with handle (BRT17899).	$112
7600-0058	Wrench Hydrant w/2 Spanner Wrench Combination Set with Bracket. Meets FAA 10C Requirements for ARFF/Fire Trucks.	$127
7600-0060	Saw Partner K12FD w/aluminum case. Meets FAA 10C requirements for ARFF/Fire trucks. Partner Model K12FD9514MK fire deptartment rescue saw 14".	$2,527
7600-0061	Saw Partner K12FD w/Metal Case. Meets FAA 10C Requirements for ARFF/Fire Trucks. Partner Model K12FD9514STD fire department rescue saw 14".	$2,040
7600-0064	Non Wedging Serrated Hand Axe with Fiberglass Handle	$220
7600-0069	Pliers 7" Diagonal Cut.	$32
7600-0070	Bracket for 43" Claw Tool installed [#LOC]	$69
7600-0078	Cold Chisel 1x8.	$19
7600-0080	Sledge Hammer 8# with Fiberglass Handle	$54
7600-0084	12" Hacksaw with 12 Spare Blades.	$87
7600-0087	Pike Pole Fiberglass 8 Ft w/ D-Handle.	$89
7600-0088	Pike Pole 8 Ft. Firehooks Unlimited APH-8 pole.	$128
7600-0089	Pike Pole 6 Ft. Firehooks Unlimited New York hook RH-6 pole.	$137
7600-0090	Flat Head Axe 8# with Fiberglass Handle	$166
7600-0091	Emergency rope 150' .625 diameter Max Wear white w/ orange tracer.	$245
7600-0092	Rubber mallet with fiberglass handle.	$45
7600-0093	Wrench Storz adjustable with holder.	$99
7600-0094	Craftsman Tool Set 283 piece set with Allen Key set and 4 Drawer Tool Box.	$762
7600-0095	Pike Pole 6 Ft. Firehooks Unlimited APS-6 pole.	$154
7600-0096	Pike Pole 6' fiberglass Ziamatic IBM-6	$153
7600-0097	Pike Pole 8' fiberglass Ziamatic IBM-8	$177
7600-0098	Pike Pole 12' fiberglass Ziamatic IBM-12	$225
7600-0099	Pike Pole 8 Ft. Firehooks Unlimited APH-8 pole with D-Handle.	$148
7600-0100	Pike Pole 10 Ft. Firehooks Unlimited APH-10 pole.	$187
7600-0101	Pike Pole 12 Ft. Firehooks Unlimited APH-12 pole.	$206
7600-0102	Pike Pole 6 Ft. Firehooks Unlimited APH-6 pole.	$116
7600-0103	Pike Pole 6 Ft. Firehooks Unlimited fiberglass MPH-6 pole. Includes gas shut-off end.	$119
7600-0104	Pike Pole 8 Ft. Firehooks Unlimited fiberglass MPH-8 pole. Includes gas shut-off end.	$140
7600-0105	Pike Pole 12 Ft. Firehooks Unlimited fiberglass MPH-12 pole. Includes gas shut-off end.	$213
7600-0108	Pike Pole 6 Ft. Akron UT-6-DWH with drywall hook.	$129
7600-0109	Pike Pole 10 Ft. Akron UT-10-DWH with drywall hook.	$141
7600-0110	Pike Pole 4 Ft. Akron UT-4-D-DWH with drywall hook and D-handle.	$129
7600-0111	Pike Pole 12 Ft. Akron PP-12 with USA standard hook.	$167
7600-0112	Pike Pole 8 Ft. Akron PP-8 with USA standard hook.	$140
7600-0113	Pike Pole 6 Ft. Akron PP-6 with USA standard hook.	$128
7600-0115	Pike Pole 8 Ft. Firehooks Unlimited New York hook RH-8 pole.	$143
7600-0116	Pike Pole Fiberglass 6 Ft w/ D-Handle.	$104
7600-0117	Pike Pole Fiberglass 12 Ft w/ D-Handle.	$128
7700-0004	Hard suction hose 6" X 10' with Pyrolite couplings.	$1,022
7700-0006	Booster hose 100' long, 1" 800 PSI.	$640
7700-0007	Akron 1" 60gpm Pistol Grip Assault Nozzle	$691
7700-0010	Hard Suction Hose 3" X 10' with Pyrolite Couplings.	$271
7700-0011	Hard Suction Hose 4.5" X 10' with Pyrolite Couplings.	$622
7700-0012	Hard suction hose 5" X 10' with Pyrolite couplings.	$749
7700-0013	Hard Suction Hose 5" X 10' with Chrome Couplings	$882
7700-0015	Hard Suction Hose 6" X 10' with Chrome Couplings.	$1,228
7700-0016	Hard Suction Hose Rack 2.5" or 3" Hose (Each)	$235
7700-0017	Soft Suction Hose 6" x 4.5" with Long Handle Chrome Couplings.	$1,522
7700-0018	Soft Suction Hose 6" X 15' with Long Handle Chrome Couplings.	$1,309
7700-0020	Booster hose, 100' length of 3/4", 800 PSI.	$559
7700-0024	Booster hose 1.25" x 150' w/1.5" NH coupling.	$1,961
7700-0025	Hose, double jacket 50' length 1.5" 600 PSI.	$204
7700-0026	Double Jacket Hose 50' Length 2.5" 600PSI	$316
7700-0027	Double Jacket Hose 50' Length 3" 600PSI	$398

7700-0028	Elkhart 1" Pistol Grip Nozzle	$767
7700-0029	Akron 1" Pistol Grip Assault Nozzle	$656
7700-0030	Akron 1.5" Assault Nozzle	$710
7700-0031	Nozzle, Akron 1.5" pistol grip - 95 gpm.	$769
7700-0032	Pistol Grip Dry Chem Nozzle 1" BTFT-DC5 w/1"NH Coupling	$566
7700-0033	Nozzle Bracket (Each)	$77
7700-0039	Air Hose .25 x 50ft Coupled with Male National Pipe Thread Ends.	$37
7700-0050	Elkhart 282A Elk-O-Lite Stream Shaper	$180
7700-0051	Elkhart ST-194 Elk-O-Lite Stacked Tips.	$465
7700-0052	Elkhart SM-1250 Select-O-Matic Master Stream Nozzle	$1,104
7700-0053	PVC suction hose 6" X 10' with Pyrolite couplings.	$1,198
7700-0057	Akron 1.5 Pistol Grip Nozzle Pre-set 125 GPM Model 4820	$548
7700-0060	Akron Quad Stacked Deluge Tips (2499). For use with Akron monitors. Ship Loose.	$448
7700-0062	Nozzle Hydro-Foam 1.5" Williams Ranger	$1,879
7700-0065	Nozzle Akron 5160 Manual Akromatic	$995
7700-0066	Nozzle 1.5 20-95gpm TFT NH Threads Pistol Grip	$314
7700-0067	Hose 1.75" x 75' with 2.5" BSS couplings.	$221
7700-0068	Hose 2.5" X 100' with 2.5" BSS couplings.	$505
7700-0072	Nozzle 2.5" TFT pistol grip with BSS coupling inlet.	$645
7700-0074	Nozzle 1.5" Turbojet high pressure	$392
7700-0081	1720 Akron Turbejet Nozzle with Pistol Grip 1.5" Swivel Inlet.	$769
7700-0082	1736 Akron Turbejet Nozzle with Pistol Grip 2.5" Swivel Inlet.	$867
7700-0084	Hard Suction Hose Rack 6" Hose (Each).	$365
7700-0097	Soft Suction Hose 20ft 5" with 4.5" long handle female coupler on one end and a 4.5" long handle male coupler on the other end.	$1,522
7700-0098	Hard Suction Hose 6" x 6' with Pyrolite Couplings	$831
7700-0106	Kochek PVC Hard Suction Hose 6" x 8' with Pyrolite Couplings.	$785
7700-0107	Kochek PVC Hard Suction Hose 4" x 10' with Storz Pyrolite Couplings.	$518
7700-0110	Akron 1.5 pistol grip nozzle pre-set 150 GPM model 1763 wide-range turbojet nozzle.	$743
7700-0114	Hard suction hose 6" x 8' with Pyrolite couplings.	$829
7700-0115	Kochek PVC Hard Suction Hose 6" x 10' with Pyrolite Couplings.	$852
7700-0116	3" Double Jacket Hose with 2.5" couplings 50' Length 600PSI	$398
7700-0118	Akron Brass stacked tips w/stream shaper. Base style 3485 & Stacked Tips style 2499.	$593
7700-0119	Soft Suction Hose 20ft 5" with 6" long handle female swivel coupler on one end and a 4.5" long handle female swivel coupler on the other end.	$1,521
7800-0000	Alco-Lite 8' Folding Ladder.	$299
7800-0002	Alco-Lite FL-10, 10' folding ladder without shoes.	$249
7800-0003	10' folding Duo-Safety 585-A ladder.	$390
7800-0004	Aluminum Cast Bracket for Duo Safety Folding Ladder - For 8' or 10'	$414
7800-0005	Alco-Lite CJL-14 Combo Ladder A-Frame/Extension.	$549
7800-0006	Alco-Lite PRL-12 roof ladder.	$398
7800-0007	Alco-Lite PRL-14' roof ladder.	$424
7800-0008	14' roof ladder, Duo-Safety 775-A.	$587
7800-0009	Duo-Safety 16' 875-A roof ladder.	$453
7800-0010	Alco-Lite PRL-16' roof ladder.	$510
7800-0011	Alco-Lite PRL-18 Roof Ladder	$552
7800-0012	Alco-Lite TRL-20 Roof Ladder	$807
7800-0013	Alco-Lite AEL-12 Attic Extension Ladder	$528
7800-0014	Alco-Lite PEL-16 Extension Ladder	$688
7800-0016	Alco-Lite PEL-24' 2-section extension ladder.	$867
7800-0017	Alco-Lite PEL3-24 extension ladder.	$1,249
7800-0018	Extension ladder, Duo-Safety 900-A, 24' 2-section.	$931
7800-0019	Vertical Ladder Bracket	$441
7800-0020	Adjustable Track for Ladder Bracket	$232
7800-0021	Alco-Lite PEL-28' extension ladder.	$1,125
7800-0022	Alco-Lite PEL-30 Extension Ladder	$1,211
7800-0023	Alco-Lite PEL3-35' 3-section extension ladder.	$1,531
7800-0024	Alco-Lite PEL-35' extension ladder.	$1,397
7800-0025	Duo-Safety 1225-A 35' 3-section extension ladder.	$1,551
7800-0026	Alco-Lite TEL3-40P Extension Ladder w/Stay Poles	$2,974
7800-0027	Little Giant model 17 ladder.	$711
7800-0028	Alco-Lite PEL-14 14' 2-Section Extension Ladder.	$666
7800-0029	Alco-Lite PEL-20 Extension Ladder.	$805
7800-0031	Little Giant Model 22 ladder.	$673
7800-0032	Alco-Lite FL-10, 10' folding ladder w/safety shoes.	$249
7800-0035	Little Giant Model 26 Ladder.	$881
7800-0038	Alco-Lite PRL-20' roof ladder.	$598
7800-0039	Duo-Safety 1225-A 30' 3 Section Extension Ladder	$1,423
7800-0040	Alco-Lite PEL3-28 Extension Ladder	$1,320
7800-0041	Duo-Safety 1200-A, 28' 2-section extension ladder.	$1,143
7800-0042	Alco-Lite FEL-24 2-section fiberglass extension ladder.	$1,517
7800-0043	Duo-Safety 12' 775-A roof ladder.	$391
7800-0044	Alco-Lite PEL-12 Extension Ladder	$584
7800-0045	Duo-Safety 1200-A 35' 2 Section Extension Ladder	$1,436

7800-0046	Duo-Safety 300-A 13' combination ladder.	$517
7800-0047	Duo-Safety 925-A 26' 3-section extension ladder.	$1,034
7800-0048	Alco-Lite CJL-10 Combo Ladder A-Frame/Extension	$443
7800-0049	Duo-Safety 1525-A 40' 3 Section Extension Ladder w/stay poles.	$2,426
7800-0050	Duo-Safety 525-C 40' 3 Section Extension Truss Ladder without stay poles.	$2,385
7800-0051	Duo-Safety 20' 875-A Roof Ladder	$570
7800-0052	Duo-Safety 18' 875-A Roof Ladder	$512
7800-0053	Alco-Lite AEL-14 Attic Extension Ladder.	$595
7800-0054	Alco-Lite TEL-40 extension ladder.	$2,160
7800-0055	Alco-Lite PEL3-40 Extension Ladder w/o stay poles.	$2,043
7800-0056	Alco-Lite TEL-35 Extension Ladder	$1,857
7800-0057	Alco-Lite TEL-28 Extension Ladder	$1,474
7800-0058	Alco-Lite TEL-40P Extension Ladder with Staypoles.	$2,522
7800-0059	Alco-Lite TEL-50P Extension Ladder with Staypoles.	$2,990
7800-0060	Alco-Lite TEL3-50P Extension Ladder w/Stay Poles	$3,481
7800-0061	Alco-Lite PRL-8 Roof Ladder.	$365
7800-0062	Alco-Lite PRL-10 Roof Ladder.	$370
7800-0064	Duo-Safety 1525-A 40' 3 Section Extension Ladder without stay poles.	$1,983
7800-0067	Duo-Safety 10' 775-A Roof Ladder	$353
7800-0068	14' Fresno Duo-Safety ladder, model 701	$675
7800-0069	Alco-Lite PEL3-35P Extension Ladder w/Stay Poles.	$1,618
7800-0070	Alco-Lite PEL3-30 3 Section Extension Ladder	$1,296
7800-0071	Duo-Safety 20' 875-A Roof Ladder with mud guard attached.	$570
7800-0072	Duo-Safety 1200-A 28' 2 Section Extension Ladder with mud guard attached.	$1,191
7800-0073	Duo-Safety 1200-A 35' 2 Section Extension Ladder with mud guard attached.	$1,484
7800-0074	Duo-Safety 3-section 16' extension ladder, Wildland	$837
7800-0075	Duo Safety 3 Section 20' Extension Ladder, Wildland	$980
7800-0076	Duo-Safety 1200-A 35' 2 Section Extension Ladder. Special custom length ladder 1" shorter than standard in closed position.	$1,436
7800-0077	Duo-Safety 925-A 22' 3 Section Extension Ladder	$1,014
7800-0078	Alco-Lite FL-10, 10' folding ladder without shoes and handles.	$249
7800-0079	Duo-Safety 1200-A 28' 2 Section Extension Ladder, special width 22" wide.	$1,273
7800-0080	Aluminum Cast Bracket for Alcolite Folding Ladder - For 8' or 10'	$414
7800-0082	Alco-Lite FRL-14' roof ladder.	$516
7800-0083	Alco-Lite FEL-24' 2-section extension ladder.	$1,128
7800-0084	Alco-Lite PEL3-40 Extension Ladder with stay poles.	$2,183
7800-0085	14' roof ladder, Duo-Safety 775-DR. Includes folding steel roof hooks on both ends with prong feet.	$619
7800-0086	Alco-Lite CJL-12 Combo Ladder A-Frame/Extension.	$501
7800-0087	Alco-Lite FEL3-35 3-section fiberglass extension ladder.	$1,670
7800-0088	10' roof ladder, Duo-Safety 775-DR. Includes folding steel roof hooks on both ends with prong feet.	$546
7800-0089	Duo-Safety 16' roof ladder 875-DR. Includes folding steel roof hooks on both ends with prong feet.	$707
7900-0007	Chrome Barrel Strainer 2.5"	$266
7900-0008	Chrome Barrel Strainer 5".	$333
7900-0009	Strainer Bracket 5"	$95
7900-0010	Chrome Barrel Strainer 6" NST.	$333
7900-0011	Strainer Bracket 6".	$103
7900-0012	Galvanized Strainer Basket 6"	$379
7900-0014	DOT Required Drive Away Kit - Kit includes three (3) triangular warning reflectors with carrying case. This kit is for the end user and is to remain with the truck.	$29
7900-0016	Ferno Washington Model 71Stokes	$1,049
7900-0024	Foam 3% Chem Guard AFFF 5 gallon pail Mil Spec.	$92
7900-0031	Handheld flashlight, orange Streamlight Litebox flashlight with vehicle mount system.	$159
7900-0033	Medical Kit w/BLS	$352
7900-0035	Rope .625 x 100' Kern with Bag.	$263
7900-0036	Plugs Leak Sealing Kit	$462
7900-0037	Blanket Fire Rescue.	$69
7900-0041	Ramsey QM9000, 9000 lb. portable winch.	$1,599
7900-0043	Firecom UH-40 headset.	$429
7900-0044	Chrome Barrel Strainer 3"	$269
7900-0045	Poly Box 6" high x 8" wide x 22" deep.	$180
7900-0046	Goodyear front spare tire assembly with aluminum wheel to match front tire / wheel specification.	$1,969
7900-0047	Goodyear rear spare tire assembly with aluminum wheel to match rear tire / wheel specification.	$1,703
7900-0048	Michelin front spare tire assembly with aluminum wheel to match front tire / wheel specification.	$1,786
7900-0049	Michelin rear spare tire assembly with aluminum wheel to match rear tire / wheel specification.	$1,596
7900-0050	Goodyear front spare tire assembly with steel wheel to match front tire specification.	$1,426
7900-0051	Goodyear rear spare tire assembly with steel wheel to match rear tire specification.	$1,151
7900-0052	Michelin front spare tire assembly with steel wheel to match front tire specification.	$1,347
7900-0053	Michelin rear spare tire assembly with steel wheel to match rear tire specification.	$1,031
7900-0054	Handheld Flashlight, Orange Streamlight Survivor LED flashlight with holder and AC/DC charger. Ship loose.	$164
7900-0055	Ferno Millenia 18" wide Backboard	$198

7900-0057	Intercom System Setcom Orange County, Reference Quote in Truck File, All Components are to be Shipped Loose for Customer Installation.	$5,940
7900-0058	Diagnostic Software Kit for S-60 Engine, Allison Transmission, and ABS	$7,241
7900-0061	Firecom UH-10 headset.	$429
7900-0062	Firecom UH-10S headset.	$429
7900-0063	Firecom UH-20 headset.	$429
7900-0066	Shoreline extension cord 50' of 12/3 black. (1) end 20A male household, (1) end 20A female auto eject.	$185
7900-0067	Strainer Bracket 2.5"	$95
7900-0068	Military ID plate. Info to be supplied at completion of unit.	$126
7900-0070	Jack 12 tons.	$104
7900-0086	Road safety Kit ARFF.	$395
7900-0100	A 9000 lb Warn multi-mount (portable) electric reversible winch with 125' of 5/16" galvanized aircraft type cable and a replaceable clevis hook shall be installed and shall be controlled with a 12' remote control switch.	$1,746
7900-0101	Medical glove box. Shipped loose. Includes slotted top for dispensing gloves without opening hinged lid. Box to be same color as interior of cab. Secure lid in closed position with small butterfly latch.	$246
7900-0102	Manual cord reel for 200' of 10/3 wire and a 20amp twist lock connection.	$693
7900-0103	50 foot extension cord with Battery charger recept on one end.	$159
7900-0104	Ramsey QM8000 8000 lb portable winch	$1,521
7900-0106	Fold down computer tray.	$644
7900-0107	Ship spare tire(s) via common carrier to customer location.	$147
7900-0108	Quartz light MagnaFire 750W/120V model KR-SB-836-TM-I with external mount tripod telepole. Shipped loose.	$1,202
7900-0117	245 Piece Craftsmen Mechanics toolbox - Sears #00934245000 Mfr # 34245	$409
7900-0119	Jack 12 tons.	$174
7900-0120	HeartStart OnSite Automated External Defibrillator. Unmounted.	$2,007
7900-0133	Wabco diagnostic software - provided at delivery.	$112
7900-0135	Vest, traffic safety orange nylon mesh.	$14
7900-0143	Monitor Akron #3416	$1,373
7900-0151	Shoreline extension cord 50' of 12/3 black. (1) end 20A male household, (1) end 20A female auto eject.	$185
7900-0154	Map Box Rectangular Short.	$476
7900-0155	Junkin model JSA-300PCW stokes basket. Ship loose.	$750
7900-0156	Multiplex adapter kit. Includes 6' harness with 9 pin plug/Deutsch ends and a USB to CAN interface module.	$288
7900-0157	Junction box Circle-D with four (4) 3-wire NEMA L5-20 110 volt 20 amp twist lock receptacles. Includes 3' pig tail with 20A TL connector.	$711
7900-0158	Junction box Circle-D with (2) 15 amp straight blade and (2) 20 amp twist lock receptacles. Includes 3' pig tail with 20 amp twist lock connector.	$898
7900-0159	Junction box Circle-D with (2) 15 amp straight blade and (2) 20 amp twist lock receptacles. Includes 20 amp twist lock inlet connector.	$898
7900-0161	Akron 3125 Portable Pyrolite Foam Eductor 125 gpm with 2.5" Swivel Connection.	$653
7900-0166	Computer Panasonic Toughbook 30.	$4,832
7900-0167	Junction box Circle-D with (1) 20 amp straight blade and (3) 20 amp twist lock receptacles. Includes 3' pig tail with 20 amp twist lock connector.	$898
7900-0169	12x18 American Flag for bumper guide (PR). Shipped loose.	$68
7900-0170	Zico helmet holder model UHH-1 (EA). Ship loose.	$60
7900-0171	Cummins Quick Check 5200 Kit. Ship loose.	$1,761
7900-0172	28" orange traffic cone with (2) reflective stripes.	$54
7900-0173	Junction box Woodhead with four (4) NEMA L5-15 110 Volt 15 Amp twist lock receptacles. Includes 12" pig tail with 20A TL connector.	$1,414
7900-0174	Map Box with Angle Storage. Finish to match cab interior. Ship loose.	$476
7900-0175	Map box suspended with officer's map storage without mounting angles. Finish to match cab interior. Ship loose.	$667
7900-0178	Generator Honda 2KW model EU2000iA with 1.6KW continuous output. Shipped loose.	$1,516
7900-0179	Akron Apollo (3416) Ground Mount, Pyrolite stream shaperand stacked tips base to have single 4" storz inlet.	$3,624
7900-0180	Cascade model CT-PSS1 one piece tapered stainless steel Pro Series stokes basket. Ship loose.	$1,218
7900-0183	Sign plate smooth 30"x30" shipped loose. Color: Job Color	$229
7900-0192	Bracket SCBA Lifeguard SmartDock Gen2 restraint system. Location: Ship Loose.	$475
7900-0193	Junction box Circle-D 3-wire 110V with (2) 20 amp straight blade and (2) 30 amp twist lock receptacles. Includes 12" pig tail with 30 amp twist lock connector.	$898
7900-0197	Map box suspended with drop-down doors. 34"W x 9.50"H x 12"D. Shipped loose. Map box to be Zolatone gray.	$552
7900-0203	Junction box Circle-D with (3) NEMA 5-20 120V GFCI duplex and (1) NEMA L6-20 220V twist lock receptacle. Includes 3' pig tail with L14-30P TL connector. Shipped loose.	$898
7900-0206	Junction box Akron with (4) 5-15 120v 15 Amp duplex recepts. Includes 12" pigtail with Hubbel L5-20 connector. Ship loose.	$656
7900-0207	FireCom wireless headset. One (1) model UHW-51 (intercom ordered separately).	$766
7900-0208	FireCom wireless headset. One (1) model UHW-54 (intercom ordered separately).	$766
7900-0209	FireCom slotted dome headset. One (1) model UH-51S, (intercom ordered separately).	$488

7900-0210	FireCom headset. One (1) model UH-51 (intercom ordered separately).	$488
7900-0211	FireCom headset. One (1) model UH-52 (intercom ordered separately).	$488
7900-0212	FireCom wireless headset. One (1) model UHW-52 (intercom ordered separately).	$766
7900-0214	FireCom slotted dome headset for wireless intercom. One (1) model UH-51S and one (1) model BP5-10 plug in belt pack to provide wireless headset functionality (intercom ordered separately).	$1,003
7900-0215	FireCom headset. One (1) model UH-54 (intercom ordered separately).	$488
7900-0217	Wheel Chocks 32" NFPA Compliant - Pair of Zico AC-32. Up to 32" diameter tires.	$276
7900-0218	Wheel chocks 44" NFPA complaint, pair (PR) of Zico SAC-44. Up to 44" diameter tires.	$584
7900-0221	Junction box Circle-D with four (4) 3-wire 120Volt 20 Amp duplex receptacles with reset breakers. Includes 12" pig tail with L14-20 TL connector. For use with 10/4 240V reel.	$898
7900-0222	Diagnostic software for Allison transmission.	$1,099
7900-0223	Front and rear wheel trim kit (ship loose). Includes Real Wheels stainless steel "Cover-Up" covers with E-ONE logo for front IFS and rear tandem axle.	$1,088
7900-0224	Light Fire Research Spectra LED 110V portable model SPA700-K20-703-ON. Location(s): shipped loose.	$2,397
7900-0225	Bostrom SecureAll mechanical air pack bottle bracket (EA) (included in loose equipment).	$494
7900-0226	Junction box Akron with four (4) 3-wire Nema L5-20 110Volt 20 Amp twist lock receptacles. Includes 12" pigtail with L5-20 connector. Ship loose.	$656
7900-0228	V-MUX Electrical system diagnostic kit.	$832
7900-0229	Zinc Plated Strainer Basket 6"	$239
7900-0232	Hosebed divider(s) short. To run above enhanced extended body to the rear of hose bed approximately 17" long x 22.25" high. Divider(s) to be shipped as loose equipment.	$75
7900-0233	Setcom headset. One (1) model CSB-900 radio transmit capable (intercom system ordered separately).	$484
7900-0234	Setcom headset. One (1) model CSB-901 intercom only (intercom system ordered separately).	$484
7900-0235	Setcom wireless headset with base. One (1) model CSB-900W3 radio transmit capable (intercom system ordered separately).	$1,044
7900-0236	Setcom wireless headset with base. One (1) model CSB-901W3 intercom only (intercom system ordered separately).	$1,044
7900-0237	Junction box with 2' pigtail. Daniel Woodhead with two (2) NEMA L5-20 110V 20A twist lock and two (2) NEMA 5-20 110V 20A duplex receptacles. Includes 2' pigtail wired direct with a male L5-20 plug. Shipped loose.	$1,332
7900-0240	Junction box Akron with two (2) 5-20 120v 20 Amp straight blade duplex receptacles and two (2) L5-20 120v 20 Amp twist lock receptacles. Each receptacle shall be equipped with individual 20A breakers, a spring-loaded snap cover and marked in white lettering with that receptacles voltage and ampere rating. All electrical receptacles, plugs and snap type weatherproof covers shall be UL Listed components. 12" Pigtail that includes wire mesh cord grip with a L14-20 connector. Ship loose.	$656
7900-0242	Junction box Circle-D with four (4) 3-wire Nema 5-20 110Volt 20 Amp duplex household receptacles. Includes 3' pig tail with 20A TL connector.	$711
7900-0243	Exhaust end chrome plated. Due to high heat from current emission exhaust systems, dis-coloring of exhaust end may occur after prolonged use. Ship Loose.	$250
7900-0245	Junction box Circle-D with three (3) L5-20 120v 20 Amp twist lock receptacles and one (1) 5-20 120v 20 Amp straight blade duplex receptacle. A Circle-D model PF51G four outlet electrical junction box shall be provided and shall have an integral pilot light to indicate electrical current. Each receptacle shall be equipped with individual 20A breakers. 12" Pigtail with a L14-20 4 wire connector. Ship loose.	$898
7900-0247	Speedlay tray loose equipment - removable. Tray includes a 1.25" extruded alum handle low on each end of tray and slots down each side to facilitate lifting. The floor of the tray shall have poly slides and be slotted to prevent the accumulation of water and allow for ventilation of wet hose.	$574
7900-0248	Pro-Link hand held diagnostic kit. Cummins engine.	$4,590
7900-0251	Foam 6% Chem Guard AFFF 5 gallon pail Mil Spec.	$128
7900-0253	Junction box Circle-D with (2) 3-wire NEMA L5-20 110V 20A twist lock receptacles and (2) 3-wire NEMA 5-20 110V 20A household receptacles. Includes 3' pig tail with 20A TL connector.	$711
7900-0255	Floodlight Whelen PFP2AC 110V powder coated black with external mount 50" tripod telepole. Requires 110V receptacle shipped loose.	$3,077
7900-0257	Soft Suction Hose 15ft 6" with 6" long handle female swivel coupler on one end and a 4.5" long handle female swivel coupler on the other end.	$1,229
7900-0258	Spotlight Optronics Blue Eye model KB4003 hand held. Ship loose.	$222
7900-0259	Removable aluminum speedlay tray(s)for 1.75" DJ hose. Tray includes a 1.25" extruded alum handle low on each end of tray and slots down each side to facilitate lifting. The floor of the tray shall have poly slides and be slotted to prevent the accumulation of water and allow for ventilation of wet hose. This is in addition to the standard speedlay trays and are to be shipped loose.	$574
7900-0260	Junction box Circle-D with (2) 15 amp straight blade and (2) 15 amp twist lock receptacles. Includes 3' pig tail with 20 amp twist lock connector.	$898
7900-0261	Shoreline extension cord 50' of 10/3 black. (1) end 30A NEMA 5-30P, (1) end 30A NEMA 5-30R.	$309
7900-0263	Storz 4" mount bracket to be located, and mounted at final inspection.	$117
7900-0265	2100 Gallon Aluminum frame portable folding tank. FDTA 2100 H2 alum w/22 oz. sides and 32 oz. Ship with unit stored in storage tank rack. Color to be yellow.	$1,710
7900-0266	Cup holder / tray for engine cover painted to match cab interior. Approx 14" wide x 10" long with tapered front corners and cup holders at each rear corner. For use in Typhoon and CII with severe duty engine cover. Ship loose.	$392

7900-0273	Junction box Circle-D with four (4) 3-wire NEMA L5-15 110 volt 15 amp twist lock receptacles. Includes 12" pig tail with 15A TL connector.	$711
7900-0274	Junction box Circle-D with (2) 20 amp straight blade and (2) 20 amp twist lock receptacles. Includes 12" pig tail with 20 amp Daniel Woodhead twist lock connector.	$898
7950-0022	Front axle wheel trim kit. Includes stainless steel lug nut covers (chrome plated plastic if applicable) and center cap with E-ONE logo. Note: Center cap will have an inspection port IPO a logo if equipped with Stemco oil seals.	$238
7950-0023	Rear axle (single) wheel trim kit. Includes stainless steel lug nut covers (chrome plated plastic if applicable) and center cap with E-ONE logo. E-ONE custom chassis w/steel wheels will have chrome plated plastic lug covers.	$293
	Paint, Striping, Lettering	
8100-0001	Paint end of fly section high visibility orange. Includes nozzle guard (if equipped).	$446
8100-0065	Paint chassis frame rails, springs, cross-members, fire pump, drivelines, fuel and air tanks, axles, front bumper extensions with brackets and front suction piping (if applicable) shall be painted: [#COL].	$1,826
8100-0070	Paint valve ends job color.	$465
8100-0071	Undercoating E-ONE.	$285
8100-0072	Touch up paint, (1) pint. Dupont paint job color.	$90
8100-0084	All applicable pump/pre-connect application modules are to have a job color finish. Includes upper and lower pump modules, crosswalk module and/or speedlay/pre-connect module (as applicable). Rear mounted body/pump module to be painted job color.	$593
8100-0085	Paint end of fly section job color. Includes nozzle guard (if equipped).	$446
8100-0088	Painted trim stripe on chassis wheels (per axle). Color to be: [#COL].	$173
8100-0096	Paint rear tow eye assemblies job color IPO black.	$270
8100-0097	Paint the pump job color.	$567
8100-0100	Special paint break. See sketch / drawing / photo in sales file.	$187
8100-0108	Front wheels to be painted on the inboard side (same color as outboard side).	$306
8100-0109	Rear wheels (4) to be painted on the inboard side (same color as outboard side). Includes outboard side of the inboard wheels.	$610
8100-0115	Paint valve ends 767681EG Black.	$465
8100-0117	Paint cab/body with approved metallic paint color.	$2,684
8100-0165	Paint lift cylinders, extension cylinders and upper turntable steelwork job color (does not apply to TT deck). If cab is two-tone, color to match upper cab.	$525
8100-0166	Painted stripe - 12" wide and straight on front, sides and rear of cab and body. Color: [#COL]. Location: [#LOC].	$4,370
8100-0169	Painted stripe - 4" wide hockey stripe, straight across front and may contour as it transitions from Cab to Body on each side. Color: [#COL]. Location: [#LOC].	$4,370
8100-0170	Painted Stripe - 6" wide with "Z". Stripe straight on front, sides and rear of cab and body. "Z" location to be specified by customer. Color: [#COL]. Location: [#LOC].	$4,370
8100-0172	Paint body two tone color. Paint break will be just above door drip rail. DuPont paint. Color: [#COL].	$1,883
8100-0174	Painted stripe - 12" wide hockey stripe, straight across front and may contour as it transitions from Cab to Body on each side. Color: [#COL]. Location: [#LOC].	$5,461
8100-0176	Paint E-ONE chassis cab - Sikkens paint. Color: [#COL].	$5,434
8100-0177	Paint cab Sikkens two-tone. Upper area of cab to be painted [#COL].	$1,224
8100-0181	Paint body two-tone color - Sikkens paint: Color: [#COL].	$1,883
8100-0183	Paint Body - Large - For Aerials, T/A Tankers/Wetsides, Rear Mounts and Rescues. Sikkens paint. Color: [#COL].	$4,142
8100-0185	Paint body stainless steel - Large. Sikkens paint. Color: [#COL].	$7,557
8100-0188	Durabak coating for all cab and body handrails.	$1,391
8100-0225	Paint the pump. Color: [#COL].	$567
8100-0226	Medical cabinet exterior roll-up door two-tone paint adjustment (EA). Includes dis-assembly/re-assembly of existing two-tone roll-up door to match cab paint break.	$452
8100-0230	Painted stripe - 10" wide hockey stripe, straight across front and may contour as it transitions from Cab to Body on each side. Color: [#COL]. Location: [#LOC].	$5,461
8100-0232	Paint aerial monitor / nozzle guard high visibility orange.	$260
8100-0361	Rear body surface to have a painted job color finish. Includes hinged doors that do not have discrete sales codes and removable panels.	$844
8100-0362	Paint body two tone color. Paint break will be just above the body compartment top. Sikkens paint. Color: [#COL].	$1,883
8100-0363	Breathing air bottle(s) to be painted non-standard color IPOS yellow. Color: [#COL].	$112
8100-0372	Paint cab two-tone with approved metallic flake paint color.	$671
8100-0373	Front cab grille mesh painted FLNA4001 white with [#COL] painted letters. Sales to provide detail of letters to provide.	$586
8100-0375	LizardSkin under cab insulation. Includes all exterior under cab surfaces exposed to interior crew compartment.	$3,100
8100-0383	Paint Newton Dump job color.	$505
8100-0385	Outline for painted letter on cab grille (EA) - 18". CIIX cabs only. Color: [#COL].	$126
8100-0386	FRP painted exterior panels IPO standard paint process for stainless steel bodies. Available only on stainless steel aerial bodies that have rollup doors. Provides a credit versus the standard painting process. Sikkens paint. Color [#COL].	-$6,072
8100-0387	Chassis frame and component undercoating prior to body load.	$741
8100-0388	Chassis fuel tank to have undercoating applied prior to installation on frame.	$199

8100-0389	Standard paint process for the exterior of large stainless steel bodies. Sikkens paint. Color: [#COL].	$4,142
8100-0394	Paint body two-tone color. Paint break will be just above the body compartment opening. Sikkens paint. Color: [#COL].	$1,883
8100-0395	Pinned waterway reel to be painted job color. Note: Since reel is painted as a complete unit, it will not be covered under the 10 year paint warranty.	$536
8100-0398	Paint swivel chute job color.	$627
8100-0401	Paint front and rear axle hubs primary job color.	$1,287
8100-0403	Black Durabak coating on fuel tank.	$403
8100-0407	Striping shall be painted as laid out and defined by customer. Refer to specific instruction, sketches and dimensions within the shop order file.	$7,633
8100-0410	Black Durabak coating on pump master drain bracket.	$47
8100-0412	Zolatone finish gray in color for the upper pump module on the officer side where the E-ONE logo is mounted.	$181
8100-0413	Front cab grille mesh painted FLNA4006 white with [#COL] painted letters. Sales to provide detail of letters to provide.	$586
8100-0416	Front cab grille mesh painted with the waving United States flag.	$1,496
8100-0421	Paint air conditioning condenser cover. Color: [#COL].	$766
8100-0422	Monitor painted [#COL].	$402
8100-0424	Front cab grille mesh painted with the waving Maryland flag.	$1,496
8100-0425	Rear ladder tunnel doors upgraded to be painted rather than sanded. Color shall be: [#COL]. Applicable rear body Chevron package shall not be applied on painted door surfaces.	$173
8100-0431	Brow light brackets (not housing) shall be painted [#COL]. This shall include forward, rear and side facing if so equipped.	$169
8100-0436	All applicable pump/pre-connect application modules are to have a job color finish. Paint the entire pump module inside and outside before loading onto the chassis.	$1,185
8100-0439	Painted crosswalk area to include all smooth plate and flat extruded surfaces exposed to the exterior forward and rearward of the crosswalk area.	$593
8100-0449	Rear inboard wheels (2) to be painted on the outboard side (same color as outer wheels). Allowing for wheels to be rotated on the rear axle.	$305
8100-0457	Paint body two-tone color - Sikkens paint. Locate at the bottom of roll-up door header. Color: [#COL].	$1,883
8100-0458	Special paint break body two-tone color - Sikkens paint: Color: [#COL]. See sketch / drawing / photo in sales file.	$1,883
8100-0467	Paint chassis frame rails, springs, cross-members, fire pump, drivelines, air tanks, axles, front bumper extensions with brackets and front suction piping (if applicable) shall be painted: [#COL]. Does not include fuel tank.	$1,826
8100-0472	Paint intake valve ends 767681EG Black. (DO NOT PAINT PLUGS & SWIVELS)	$233
8100-0473	Front cab grille mesh painted with the waving Canadian flag.	$1,496
8100-0474	Paint end of fly section high visibility orange down to folding steps. Includes nozzle guard (if equipped).	$785
8100-0475	Cab fenders to be painted Durabak black.	$281
8100-0476	Brackets painted Durabak black. Includes rear aerial style brackets, rear camera cover.	$169
8100-0477	Paint front cab grille upper two tone job color.	$645
8100-0480	Upper panels rearward of upper module storage compartment to be aluminum smooth plate painted job color.	$234
8100-0482	Paint end of fly section orange. Includes nozzle guard (if equipped).	$446
8100-0486	Pinned waterway reel to be painted to match the "two tone" sale code color. Note: Since reel is painted as a complete unit, it will not be covered under the 10 year paint warranty.	$536
8100-0488	Paint rear tow eye assemblies yellow IPO black.	$270
8100-0489	Monitor shall be painted [#COL].	$465
8100-0490	Paint end of fly section orange down to folding steps. Includes nozzle guard (if equipped).	$785
8100-0491	Front cab grille mesh painted FLNA4145 black with [#COL] painted letters. Sales to provide detail of letters to provide.	$586
8150-0008	Zolatone for Removable Toolboard.	$74
8150-0023	Interior cab handrails/window bars painted safety yellow.	$221
8200-0000	Scotchlite Letter (Each) - 3". Color [#COL].	$9
8200-0001	Scotchlite Letter (Each) - 6". Color [#COL].	$11
8200-0002	Scotchlite Letter (Each) - 9". Color [#COL].	$12
8200-0003	Scotchlite Letter (Each) - 12". Color [#COL].	$12
8200-0004	Scotchlite Letter (Each) - 15". Color [#COL].	$14
8200-0005	Scotchlite Letter (Each) - 18". Color [#COL].	$16
8200-0006	Maltese cross 12" (Pair).	$1,097
8200-0007	Sign Gold Letter (Each) - 3".	$13
8200-0008	Sign Gold Letter (Each) - 6"	$19
8200-0009	Sign Gold Letter (Each) - 9"	$29
8200-0010	Sign Gold Letter (Each) - 12"	$29
8200-0011	Scotchlite Letters (60) - 3". Color [#COL].	$740
8200-0012	Sign Gold Letters (60) - 3".	$1,076
8200-0013	Shade for lettering.	$5
8200-0014	Sign "Stay Back 500FT" with black reflective lettering. Locate below rear of body.	$130
8200-0015	White reflective tape on (2) outriggers.	$215
8200-0016	White reflective tape on (4) outriggers.	$413
8200-0018	Scotchlite Letters (90) - 3". Color [#COL].	$923
8200-0019	Scotchlite Letters (120) - 3". Color [#COL].	$1,106

8200-0020	Sign Gold Letters (90) - 3".	$1,431
8200-0021	Sign Gold Letters (120) - 3".	$1,784
8200-0022	Shade and outline for lettering.	$6
8200-0024	Reflexite Letter (Each) - 18". [#COL] Reflexite letter(s) stitched to vinyl hosebed cover end flap.	$64
8200-0026	Die cut letter in stripe (EA).	$24
8200-0027	Scotchlite Letter (Each) - 5". Color [#COL].	$11
8200-0028	Sign Gold Letter (Each) - 5"	$19
8200-0029	Scotchlite Letter (Each) - 10". Color [#COL].	$13
8200-0030	Sign Gold Letter (Each) - 10"	$29
8200-0031	Scotchlite Letter (Each) - 30". Color [#COL].	$20
8200-0032	Scotchlite letter each 24" [#COL].	$18
8200-0033	Scotchlite letter (each) - 8". Color [#COL].	$13
8200-0036	Scotchlite Letter (Each) - 4". Color [#COL].	$10
8200-0038	Reflexite Letter (Each) - 12". [#COL] Reflexite letter(s) stitched to vinyl hose bed cover end flap.	$51
8200-0039	Maltese Cross SignGold up to 18" dia (PR) with new layout.	$990
8200-0040	Gold leaf letters (90) - 3".	$3,572
8200-0041	O.W.L. lettering and striping tower package. See photos on file for custom package details.	$8,845
8200-0045	Gold leaf letters (120) - 3".	$4,157
8200-0046	Scotchlite Letter (Each) - 27". Color [#COL].	$19
8200-0047	Sign Gold Letter (Each) - 4"	$15
8200-0048	Sign Gold Letters (120) - 4".	$2,194
8200-0052	Sign Gold Letter (Each) - 8"	$29
8200-0061	Scotchlite Letter (Each) - 2". Color [#COL].	$7
8200-0068	Painted letter on cab grille (EA) - 18". CIIX cabs only. Color: [#COL].	$126
8200-0070	Scotchlite Letter (Each) - 1.25". Color Black. To read: VIST OUR WEB SITE AT: WWW.PALMHARBORFD.COM	$7
8200-0073	Sign Gold Letter (Each) - 3". Sign Gold to be small turn style.	$16
8200-0074	Maltese Cross SignGold up to 15" dia (PR) with new layout.	$796
8200-0075	Reflexite Letter (Each) - 10". [#COL] Reflexite letter(s) stitched to vinyl hose bed cover end flap.	$47
8200-0076	Sign Gold 2" Lettering IPO standard on breathing air bottle that's mounted to side of aerial base section.	$295
8200-0081	Etched Vinyl Letter (Each) - 5"	$19
8200-0084	Scotchlite Letter (Each) - 1". Color [#COL].	$7
8200-0086	Sign Gold Letter (Each) - 16".	$34
8200-0087	Sign Gold 2" Lettering with a red outline IPO standard on breathing air bottle that's mounted to side of aerial base section.	$295
8200-0088	Gold leaf letter (Each) - 4".	$66
8200-0089	Gold leaf letters (EA) - 3".	$41
8200-0090	Sign Silver Letter (Each) - 3"	$13
8200-0091	Sign Silver Letter (Each) - 12"	$29
8200-0098	Scotchlite letter each 20" [#COL].	$17
8200-0100	Sign Gold Letter (Each) - 2".	$13
8300-0002	NFPA Scotchlite Stripe - 4" wide and straight on front/sides of cab and sides/rear of body. Color: [#COL]. Location: [#LOC].	$707
8300-0003	NFPA Scotchlite Stripe - 6" wide and straight on front/sides of cab and sides/rear of body. Color: [#COL]. Location: [#LOC].	$714
8300-0006	NFPA Scotchlite Stripe - 6" wide with "Z". Stripe straight on front, sides and rear of cab and body. "Z" location to be specified by customer. Color: [#COL]. Location: [#LOC].	$1,130
8300-0008	NFPA Scotchlite Stripe - 5" wide with "S". Stripe straight on front, sides and rear of cab and body. "S" location to be specified by customer. Color: [#COL]. Location: [#LOC].	$1,261
8300-0009	NFPA Scotchlite Stripe - 5" wide with double "S". Stripe straight on front, sides and rear of cab and body. Double "S" locations to be specified by customer. Color: [#COL]. Location: [#LOC].	$1,543
8300-0011	Scotchlite stripe (PR) 1/2" located 1/2" above and below existing stripe. Color: [#COL].	$526
8300-0012	Scotchlite stripes (4) 1/2" located (2) above and (2) below existing stripe. Stripes to be spaced 1/2" apart. Color: [#COL].	$1,045
8300-0013	NFPA Scotchlite Stripe - 2" and 4" wide with "Z". Stripe straight on front, sides and rear of cab and body. "Z" location to be specified by customer. 2" above 4" with 1" gap between stripes. Color: [#COL]. Location: [#LOC].	$1,596
8300-0016	Paint Break Sign Gold Chassis Stripe - 3/4" Wide - Black, Gold, Black. To be located above existing paint break.	$247
8300-0017	Paint Break Sign Gold Body Stripe - 3/4" Wide - Black, Gold, Black. To be located above existing paint break.	$575
8300-0018	Sign gold scroll for body door with shade (Ea). Location: [#LOC]	$174
8300-0019	Sign gold scroll for body door (Ea). Location: [#LOC]	$57
8300-0024	Red/White rubrail scotchlite insert.	$205
8300-0025	1/4" Pin stripe above and below existing Scotchlite stripe. Color: [#COL].	$843
8300-0026	Scotchlite stripe 1" located 1" above and below existing stripe. Color: [#COL].	$631
8300-0027	NFPA Scotchlite 4" wide hockey stripe, straight across front and may contour as it transitions from cab to body on each side. Color: [#COL]. Location: [#LOC].	$849
8300-0028	NFPA Scotchlite 6" wide hockey stripe, straight across front and may contour as it transitions from Cab to Body on each side. Color: [#COL]. Location: [#LOC].	$857
8300-0030	NFPA Scotchlite 10" wide hockey stripe, straight across front and may contour as it transitions from Cab to Body on each side. Color: [#COL]. Location: [#LOC].	$1,146

8300-0032	Chevron "A" style 4" Scotchlite striping on rear of body. Includes rear facing extrusions, panels and doors inboard/outboard of the beavertails(if applicable). Colors to be [#COL].	$3,337
8300-0033	NFPA Scotchlite Stripe - 8" wide and straight on front/sides of cab and sides/rear of body. Color: [#COL]. Location: [#LOC].	$883
8300-0034	Scotchlite stripe 2" located 1" above existing stripe. Color: [#COL].	$400
8300-0036	NFPA Scotchlite Stripe - 8" wide with "S". Stripe straight on front, sides and rear of cab and body. "S" location to be specified by customer. Color: [#COL]. Location: [#LOC].	$1,434
8300-0037	Chevron "V" style 4" Scotchlite striping on rear of body. Includes rear facing extrusions, panels and doors inboard/outboard of the beavertails(if applicable). Colors to be [#COL].	$3,337
8300-0038	Scotchlite stripe 2" located 1" above and below existing stripe. Color: [#COL].	$798
8300-0039	Scotchlite stripe 1" located .5" above and below existing stripe. Color: [#COL].	$666
8300-0043	NFPA Scotchlite double 2" wide hockey with 1" between stripes, straight across front and may contour as it transitions from Cab to Body on each side. Color: [#COL]. Location: [#LOC].	$2,292
8300-0044	Scotchlite stripe 1" located 1" above existing stripe. Color: [#COL].	$333
8300-0045	1/4" pinstripe. Color: [#COL]. Location: At cab paint break	$185
8300-0046	Scotchlite stripe (PR) 1/2" located directly above and below existing stripe. Color: [#COL].	$661
8300-0048	Paint break Scotchlite chassis stripe - 3/4" Wide - Black, [#COL], Black. To be located above existing paint break.	$149
8300-0050	Scotchlite stripe (PR) 1" located directly above and below existing stripe on satin roll-up doors only. Color: [#COL].	$526
8300-0052	Chevron "V" style Scotchlite striping on rear of body outboard of beavertails (if equipped). Colors to be [#COL].	$990
8300-0053	Signgold body scroll package. (1) front lower corner L2 and (1) rear lower corner L5 with connecting 3/4" signgold stripe. (4) R1 (each corner) with connecting 3/4" signgold stripe. (1) R2 lower front corner and (1) R5 lower rear corner with connecting 3/4" signgold stripe.	$1,501
8300-0054	[#COL] 3/4" razor blade stripe for sign plates	$544
8300-0056	Chevron "A" style 4" individual Scotchlite striping on front bumper. Colors to be [#COL].	$1,378
8300-0057	Arched stripe 6"/2" on front cab door and blend into a straight body stripe. Includes stripe on front bumper. Color: [#COL]	$2,292
8300-0058	Chevron "V" style 4" Scotchlite striping on rear B1 compt door, (3) stripes. Colors to be red/white/black pinstripe.	$865
8300-0059	NFPA Scotchlite Stripe - 10" wide and straight on front, sides and rear of cab and body. Color: [#COL]. Location: [#LOC].	$1,163
8300-0060	Scotchlite Stripe - 5" wide straight on front front of cab below windshield end at radius corners. Color: [#COL].	$235
8300-0061	Chevron "A" style 6" individual Scotchlite striping full width on rear of body. Includes rear facing extrusions, panels and doors. Colors to be [#COL].	$1,760
8300-0062	Chevron "A" style Scotchlite striping on rear of body outboard of beavertails (if equipped). Colors to be [#COL].	$990
8300-0063	Scotchlite Stripe - Quest Demo. Includes large "Quest" letters that are arched to match cab window line with triple stripe along body. Includes straight stripe on front and rear of apparatus for NFPA compliance. Color: [#COL].	$2,393
8300-0065	Paint break scotchlite chassis stripe - 3/4" Wide - White, [#COL], White. To be located above existing paint break.	$643
8300-0066	NFPA Scotchlite Stripe - 4" wide with "Z". Stripe straight on front, sides and rear of cab and body. "Z" location to be specified by customer. Color: [#COL]. Location: [#LOC].	$1,121
8300-0067	Chevron "A" style 4" Scotchlite striping on rear of body outside of beavertails. Colors to be [#COL].	$1,378
8300-0069	6" [#COL] scotchlite stripe around perimeter of plaform. Includes 1/2" black trim on top and bottom of stripe.	$491
8300-0070	Chevron "A" style 4" Scotchlite striping on rear of body between beavertails. Colors to be [#COL].	$1,899
8300-0072	NFPA Scotchlite Stripe - 10" wide with "Z". Stripe straight on front, sides and rear of cab and body. "Z" location to be specified by customer. Color: [#COL]. Location: [#LOC].	$1,930
8300-0073	Scotchlite stripe - double (special for Covington, GA). Stripe to be a combination interlocking double "Z" with hockey style kick-up on cab. 10" stripe to be red, 3" stripe to be gold. See photos in file for layout..	$3,649
8300-0076	Chevron "A" style 4" Scotchlite striping on rear of body between beavertails; body panels and extrusions only (No doors). Colors to be [#COL].	$1,062
8300-0078	Chevron "A" style 4" 3M "Diamond Grade" striping on rear of body. Includes rear facing extrusions, panels and doors inboard/outboard of the beavertails(if applicable). Colors to be [#COL].	$4,171
8300-0079	Chevron "A" style 4" 3M "Diamond Grade" striping on rear pump panel/bleeder panel(s). Colors to be [#COL].	$697
8300-0080	Chevron "A" style 4" 3M "Diamond Grade" striping on front bumper. Colors to be [#COL].	$1,723
8300-0081	Chevron "A" style 3M "Diamond Grade" striping on rear of body outboard of beavertails (if equipped). Colors to be [#COL].	$1,238
8300-0082	[#COL] Scotchlite on nozzle guard.	$353
8300-0083	[#COL] Scotchlite on end of fly section	$547
8300-0084	Chevron "A" style 6" printed sheet Scotchlite striping full width on rear of body. Includes rear facing extrusions, panels and doors. Colors to be [#COL].	$1,374
8300-0085	Scotchlite stripe 1" located directly above and below existing stripe. Color: [#COL].	$631
8300-0086	Scotchlite 6" wide cab hockey stripe. Hockey located on front cab doors up to top of cab. Color: White.	$514
8300-0087	Sign Gold Chassis Stripe - 3/4" Wide - Black, Gold, Black. To be located 1" below scotchlite stripe on cab only.	$247

8300-0088	NFPA Scotchlite Stripe - 4" wide and straight on sides and rear of body only. Color: [#COL]. Location: [#LOC].	$778
8300-0090	Scotchlite stripe 1.5" located directly above and below existing stripe. Color: [#COL].	$668
8300-0091	1/4" Scotchlite pinstripe above and below existing stripe. Color: [#COL].	$962
8300-0092	NFPA Scotchlite custom double hockey stripe. Includes white 6" stripe with 10" angle (hockey) stripes and gold accent stripes on white stripe with black outline. Top of stripe even with bottom of quad bezel, hockey on rear of front cab doors and hockey on L2/R2. See additional photos on file with sales.	$4,042
8300-0093	Chevron "A" style 6" printed sheet Scotchlite striping on front bumper. Colors to be [#COL].	$566
8300-0094	Chevron "A" style 4" Scotchlite striping on rear body panels only, no extrusions. Colors to be [#COL].	$2,504
8300-0096	Reflective tape on two outriggers. Individual striping to alternate in an "A" pattern when viewed from the front or rear of the truck. Colors to be: [#COL].	$583
8300-0097	NFPA Scotchlite custom hockey stripe. Include 6" red stripe centered at front headlights with 2" white stripe below (no gap), additional 2" red below (no gap); hockey up on L3/R3 compt doors. Additional 2" red stripe 2" above bottom of cab doors and straight back. See photos on file with sales.	$3,898
8300-0099	Chevron "A" style 6" printed sheet Scotchlite striping on rear of body between beavertails. Colors to be [#COL].	$1,081
8300-0100	Chevron "V" style 4" Scotchlite striping on rear ladder tunnel door(s) only. Colors to be [#COL].	$857
8300-0104	Chevron "V" style 3" Scotchlite striping on rear of body. Colors to be Red/White/Blue.	$3,337
8300-0109	Chevron "A" style 6" 3M "Diamond Grade" striping on rear of body. Includes rear facing extrusions, panels and doors inboard/outboard of the beavertails(if applicable). Colors to be [#COL].	$4,171
8300-0111	Chevron "A" style 6" individual Scotchlite striping on rear of body except for the pump/ladder tunnel access door. Colors to be [#COL].	$3,337
8300-0112	Chevron "A" style 6" Scotchlite striping on rear facing side of the slide out room. Colors to be [#COL].	$1,671
8300-0119	Yellow reflective tape on 2 outriggers.	$212
8300-0120	Chevron "A" style 6" 3M "Diamond Grade" striping on front bumper. Colors to be [#COL].	$1,723
8300-0121	Blue reflective tape on 2 outriggers.	$212
8300-0122	Signgold body scroll package. (1) each upper corner L1, L2, L3, L6, L7, R1, R2, R3, R6, R7 and (1) each upper corner L4, L5, R4, R5 with connecting 3/4" signgold stripe. See photos on file with sales.	$5,641
8300-0123	Chevron "A" style 6" printed pattern NFPA Scotchlite striping. Provided to driver and officer rear compartment face, smooth plate panels and/or doors outboard and above the center rear compartment opening and the vertical hosebed extrusions (terminate just above the upper hand rail stanchion). The vertical and horizontal extrusions inboard of the vertical hose bed extrusions shall remain visible with a sanded finish. Colors to be [#COL].	$540
8300-0125	Reflective [#COL] striping positioned in the "A" formation located in the lower door panel (EA). Location: [#LOC].	$69
8300-0138	Reflective tape on four outriggers. Striping to alternate in an "A" pattern when viewed from the front or rear of the truck. Colors to be: [#COL].	$1,151
8300-0142	Chevron "A" style 6" individual Scotchlite striping on front bumper. Colors to be [#COL].	$708
8300-0143	NFPA Scotchlite Stripe - three stripes 3" wide with "Z" with 1" gap between stripes. Stripe straight on front, sides and rear of cab and body. "Z" location to be specified by customer. Color: top stripe - Yellow, middle stripe - White, bottom stripe - Black. Location: top of bottom stripe flush with top of bumper and straight back.	$3,078
8300-0144	Chevron "A" style 6" 3M "Diamond Grade" striping on rear of body (does not include the B1 door). Includes rear facing extrusions, panels and doors inboard/outboard of the beavertails(if applicable). Colors to be [#COL].	$1,754
8300-0145	Chevron "A" style 6" 3M "Diamond Grade" striping on front bumper. Colors to be [#COL].	$838
8300-0146	Chevron "A" style 6" 3M "Diamond Grade" striping full width on rear of body. Includes rear facing extrusions, panels and doors. Colors to be [#COL].	$2,313
8300-0148	Sign gold scroll (4 ea side) for body with connecting .75" sign gold body stripe and white painted pin stripe.	$2,940
8300-0150	Chevron "A" style 6" printed sheet Scotchlite striping on rear of body. Includes rear facing extrusions, panels and doors inboard/outboard of the beavertails (if applicable). Colors to be [#COL].	$1,195
8300-0155	NFPA Scotchlite Stripe - 4" wide with ribbon style "Z". Stripe straight on front, sides and rear of cab and body. "Z" location to be specified by customer. Color: [#COL]. Location: [#LOC].	$1,130
8300-0156	Sign gold scroll (20) for body doors with connecting .5" sign gold stripe.	$1,320
8300-0159	Red/Yellow scotchlite. Locate on front of roll-out tray(s), front lip of adjustable/fixed shelves and tool board(s) on outer vertical edge on both sides.	$411
8300-0161	NFPA Scotchlite stripe. Pasco County double half "S" stripe with 1" black, 1/2" white, 4" red, 1/2" white. See photos on file with sales.	$2,068
8300-0162	Scotchlite stripe 1" located 1" below existing stripe. Color: [#COL].	$333
8300-0166	Diamond Grade reflective tape on (4) outriggers. Striping to alternate in an "A" pattern when viewed from the front or rear of the truck. Colors to be: [#COL].	$856
8300-0179	Chevron "A" style 6" printed sheet Scotchlite striping on rear of body. Includes rear facing extrusions, panels, inboard/outboard of the beavertails (if applicable). Does not include the rear door(s). Colors to be Yellow/Red.	$1,135
8300-0180	Sign gold scroll (4 ea side) for body with connecting .75" sign gold body stripe and white scotchlite pin stripe.	$1,972

8300-0181	Paint Break Sign Gold Chassis Stripe - 3/4" Wide - Black, Gold, Black. Sign Gold to be small turn style. To be located above existing paint break.	$496
8300-0184	Special rear flag style chevron striping on rear of apparatus. Includes triangular area of blue Scotchlite (with white reflective stars) at top center with individual 6" red and white Scotchlite stripes at a 45 degree angle on remaining area (sloping down from left to right). Ref photo of SO 134676.	$1,927
8300-0186	NFPA Scotchlite Stripe - 2" and 6" wide with "Z". Stripe straight on front, sides and rear of cab and body. "Z" location to be specified by customer. 2" above 6" with 1" gap between stripes. 6" stripe to have a .25" outline above and below. Color: [#COL]. Location: [#LOC].	$1,596
8300-0189	Scotchlite striping on front bumper 6". Color to be [#COL].	$708
8300-0190	Chevron "A" style 6" 3M "Diamond Grade" striping on rear of body (does not include the B1 door). Includes rear facing extrusions, panels and doors inboard/outboard of the beavertails(if applicable). Colors to be [#COL].	$1,754
8300-0191	Paint break Scotchlite chassis stripe - 1/4" Wide - [#COL]. To be located above existing paint break.	$459
8300-0192	NFPA Scotchlite Stripe - 8" and 3" wide with "Z". Stripe straight on front, sides and rear of cab and body. "Z" location to be specified by customer. 8" above 3" with 1.5" gap between stripes. Color: White. Location: Center of the 8" stripe centered with Quad bezel (in between upper and lower bezel) and straight back.	$2,097
8300-0193	Chevron "A" style 3M "Diamond Grade" Dots in 6" striping pattern on rear of body (does not include the B1 door). Includes rear facing extrusions, panels and doors inboard of the beavertails (if applicable). Colors to be [#COL].	$2,613
8300-0194	Install dealer supplied Scotchlite pinstripe above and below existing stripe. Color: Blue.	$516
8300-0197	Scotchlite stripe 1" located 1" down from top of stripe and 1" up from bottom of stripe (1"stripes on existing stripe). Color: [#COL].	$666
8300-0198	NFPA Scotchlite Stripe - 8" wide with "Z". Stripe straight on front, sides and rear of cab and body. "Z" location to be specified by customer. Color: [#COL]. Location: [#LOC].	$2,097
8300-0200	Scotchlite stripe 2" located 2" below existing stripe. Color: [#COL].	$787
8300-0204	Chevron "A" style 6" 3M "Diamond Grade" striping on (4) outriggers. Colors to be [#COL].	$1,163
8300-0205	NFPA Scotchlite Stripe - 4" wide with double ribbon. Double ribbon locations to be specified by customer. Color: [#COL]. Location: [#LOC].	$1,543
8300-0207	Chevron "A" style printed sheet 6" striping for sign plate at rear turntable handrails. Colors to be [#COL].	$287
8300-0208	Chevron "A" style 6" Scotchlite striping on bottom of platform oriented with base of chevron to hinged side. Colors to be Red/Yellow.	$845
8300-0209	NFPA Scotchlite Stripe - 10" wide with pin striping above and below. Pin striping thickness and spacing shall be as specified in shop order and straight on front, sides and rear of cab and body. Color: [#COL]. Location: [#LOC].	$1,468
8300-0210	There will be reflective tape added to the front and both sides of all roll-out trays to aid in visibility. Tape will be [#COL] in color.	$1,051
8300-0214	Chevron "A" style 6" printed sheet Scotchlite striping stitched to vinyl hosebed cover end flap. Colors to be [#COL].	$425
8300-0215	Gold reflective tape on 2 outriggers.	$212
8300-0216	Scotchlite 3" wide hockey stripe, straight across front and may contour as it transitions from cab to body on each side. Color: [#COL]. Location: [#LOC].	$849
8300-0217	NFPA Scotchlite Stripe - 1" and 6" wide with "Z". Stripe straight on front, sides and rear of cab and body. "Z" location to be specified by customer. 1" above 6" with 1" gap between stripes. 6" stripe to have a .25" outline above and below. Color: [#COL]. Location: [#LOC].	$1,596
8300-0220	Paint Break Sign Gold Chassis Stripe - 1" Wide - Black pin stripe, Sign Gold, Black pin stripe. To be located above existing paint break if so equipped or at the same approximate position (when there is not a paint break).	$661
8300-0221	Sign gold scroll (Ea). Scroll detail/definition shall be defined by sales administration and or shop order file. Location: [#LOC]	$57
8300-0222	NFPA Scotchlite Stripe - 1", 4" and 1" wide with "Z". Stripe straight on front, sides and rear of cab and body. "Z" location to be specified by customer. 1" above and below 4" with 1" gap between stripes. Color: [#COL]. Location: [#LOC].	$1,596
8300-0223	NFPA Scotchlite Stripe - 6" wide with double pin stripe top and bottom. "Z" Stripe straight on front, sides and rear of cab and body. "Z" location to be specified by customer. Stripe shall be a printed sheet laid out from top to bottom as 1/4" pin stripe, 1/8" gap (wide stripe color), 1/8" pin stripe, 6" wide stripe, 1/8" pin stripe, 1/8" gap (wide stripe color), 1/4" pin stripe. Color: [#COL]. Location: [#LOC].	$1,596
8300-0224	Paint break Scotchlite chassis stripe - 1/2" Wide - [#COL]. To be located above existing paint break.	$526
8300-0225	Paint break Scotchlite body stripe - 1/2" Wide - [#COL]. To be located above existing paint break.	$749
8300-0226	Sign Gold Stripe - 3/4" Wide aerial sign plate - Gold with red pin stripe outline. The striping shall create a border around sign plate lettering.	$1,112
8300-0227	Diamond Grade reflective tape on (2) outriggers. Striping to alternate in an "A" pattern when viewed from the front or rear of the truck. Colors to be: [#COL].	$680
8300-0228	Printed reflective striping on (2) outriggers. Striping to alternate in an "A" pattern when viewed from the front or rear of the truck. Colors to be: [#COL].	$302
8300-0229	Scotchlite stripe 3" located 2" below existing stripe. Color: [#COL].	$831
8300-0230	Paint break painted on chassis stripe - 1/8" Wide - [#COL].To be located above existing paint break if so equipped or at the same approximate position (when there is not a paint break).	$1,120

8300-0232	NFPA Scotchlite Stripe - 2" and 4" wide with interlocking "Z". Stripe straight on front, sides and rear of cab and body. "Z" location to be specified by customer. 2" above 4" with 1" gap between stripes. Color: [#COL]. Location: [#LOC].	$1,596
8300-0233	NFPA Scotchlite Stripe - 1", 4" and 1" wide with triple interlocking "Z". Stripe straight on front, sides and rear of cab and body. "Z" location to be specified by customer. 1" above and below 4" with 1" gap between stripes. Color: [#COL]. Location: [#LOC].	$2,334
8300-0234	NFPA Scotchlite Stripe - 2" wide with "Heartbeat". Stripe straight on front, sides and rear of cab and body. "heartbeat" location to be specified by customer. Color: [#COL]. Location: [#LOC].	$1,121
8300-0237	Individual reflective tape on (4) outriggers. Striping to alternate in an "A" pattern when viewed from the front or rear of the truck. Colors to be: [#COL].	$777
8300-0238	Printed reflective striping on (4) outriggers. Striping to alternate in an "A" pattern when viewed from the front or rear of the truck. Colors to be: [#COL].	$365
8300-0239	Individual reflective tape on (2) outriggers. Striping to alternate in an "A" pattern when viewed from the front or rear of the truck. Colors to be: [#COL].	$584
8300-0240	Installation of a customer supplied stripe 16" in width shall be installed. The 16" stripe material shall be supplied by the customer Spectra Red in color and shall be reviewed by the Graphics personnel prior to order entry. The stripe shall align on the cab face as specified by customer and go straight back.	$1,628
8300-0243	Chevron "A" style printed sheet 6" Scotchlite striping on bottom of platform oriented with base of chevron to hinged side. Colors to be Red/Yellow.	$674
8300-0244	Reflective tape on four outriggers. Striping to alternate in an "A" pattern printed sheet when viewed from the front or rear of the truck. Colors to be: [#COL].	$806
8300-0245	5/16" Pin stripe above and below existing Scotchlite stripe. Color: [#COL].	$843
8300-0246	Yellow M 983-71 rubrail scotchlite insert.	$457
8300-0247	NFPA Scotchlite Stripe - 8" wide with overlaid striping. Overlaid striping width and spacing shall be as specified in shop order and straight on front, sides and rear of cab and body. Color: [#COL]. Location: [#LOC].	$1,468
8300-0248	Chevron "A" style 6" printed sheet Scotchlite striping on entire rear of body. Includes rear facing extrusions, panels, doors and rear driver and officer compartment face. Colors to be [#COL].	$1,786
8300-0249	SignGold chassis stripe package. Includes 3/4" wide stripe with white pin stripe and arrow ends. Location: driver and officer side of cab low on front cab doors, around wheel well and low on rear cab doors. Front cab corners. See photos on file with sales.	$1,163
8300-0251	Scotchlite stripe 3" located 1" below existing stripe. Color: [#COL].	$831
8300-0252	NFPA Scotchlite hockey stripe. The stripe shall be 4"wide with a 3/4" gap above with a 2" wide stripe. The hockey stripe shall go straight across front and may contour as it transitions from cab to body on each side. Color: [#COL]. Location: [#LOC].	$939
8300-0254	Sign gold scroll (2) at front cab corners below windshield with connecting .75" sign gold chassis stripe between scrolls and down to trim.	$336
8300-0256	NFPA Scotchlite Stripe - 6" wide striping on the interior of each vertically hinged door. Locate stripe approx 2" up from bottom of the door. Double doors will have a stripe on each door and will count as 1 stripe. Color: Red	$118
8300-0257	Scotchlite Stripe - approximately 6" wide straight on front of cab below windshield end at radius corners. Stripe to be in line (match) the top of the side stripes and trimmed as required at the front cab horizontal radius just above the bumper. Color: [#COL].	$195
8300-0258	Chevron "A" style 6" Blue 3M Scotchlite and Fluorescent Yellow Green 3M "Diamond Grade" striping on rear of body. Includes rear facing extrusions, panels and doors inboard/outboard of the beavertails (if applicable).	$2,313
8300-0259	Chevron "A" style 3M Diamond Grade striping in rubrail. Colors to be: [#COL]	$648
8300-0263	Printed reflective striping on outboard facing surface only for the (8) jack leg covers. Includes (4) outrigger covers and (4) fixed painted plate filler panels. Striping to alternate in an "A" style 6" pattern when viewed from the side of the truck. Colors to be: [#COL].	$257
8300-0264	Paint break Scotchlite chassis stripe - 1" Wide - Red, [#COL], Red. To be located above existing paint break.	$187
8300-0265	NFPA Scotchlite Stripe - 6" wide with "Z". Stripe straight on front, sides and rear of cab and body. "Z" location to be specified by customer. Color: White on cab and body / Ruby Red on body doors. Location: bottom of stripe flush with bottom of cab and straight back.	$1,130
8300-0267	NFPA Scotchlite Stripe - 9.5" wide and straight on front, sides and rear of cab and body. Color: [#COL]. Location: [#LOC].	$1,163
8300-0269	NFPA Scotchlite stripe. Hillsborough County hockey stripe with 1" red, 1/4" white and 6" black with (2) 1" lemon yellow stripes centered on top of black stripe with 1/4" gap. See photos on file with sales.	$3,537
8300-0271	Chevron "A" style 6" 3M "Diamond Grade" striping on interior of front bumper lid. Colors to be [#COL].	$838
8300-0272	NFPA Scotchlite Stripe - 2" and 4" wide with interlocking hockey. Stripe straight on front, sides and rear of cab and body. Hockey location to be specified by customer. 2" above 4" with 1" gap between stripes. Color: [#COL]. Location: [#LOC].	$1,596
8300-0273	Chevron "A" style 6" Reflexite V98 striping on front bumper. Colors to be [#COL].	$741
8300-0274	Chevron "A" style 6" Reflexite V98 striping full width on rear of body. Includes rear facing extrusions, panels and doors. Colors to be [#COL].	$1,966
8300-0279	Stripe cab lock bar. Color: White.	$73
8300-0280	Chevron "A" style 6" Reflexite V98 striping on (2) outriggers. Striping to alternate in an "A" pattern when viewed from the front or rear of the truck. Colors to be: [#COL].	$639
8300-0281	Chevron "A" style 6" Reflexite V98 striping on (4) outriggers. Striping to alternate in an "A" pattern when viewed from the front or rear of the truck. Colors to be: [#COL].	$851

8300-0286	Chevron "A" style 6" Reflexite V98 striping full width on rear of body (does not include the B1 door and/or center aerial ladder tunnel door). Includes rear facing extrusions, panels and doors. Colors to be [#COL].	$1,778
8300-0287	Sign Gold Stripe - 3/4" Wide aerial sign plate - Black, Gold, Black. The striping shall create a border around sign plate lettering.	$1,112
8300-0288	Sign Gold Body Stripe - 3/4" Wide - Black, Gold, Black. To be located on upper body sides terminating with an arrow at each end.	$644
8300-0289	Paint Break Sign Gold Chassis Stripe - 3/4" Wide - Black, Gold, Black. To be located at the same approximate position as a paint break with dip to grille.	$247
8300-0291	Scotchlite stripe 1" located 2" above and below existing stripe. Color: [#COL].	$631
8300-0292	Chevron "A" style 6" Reflexite V98 striping on rear of body. Includes rear facing extrusions, panels and doors inboard of beavertails (if equipped). Does not include rear facing outboard compartment faces. Colors to be [#COL].	$1,773
8400-0000	Vision flags on canopy windows (PR).	$531
8400-0004	Install customer supplied logos on front cab doors.	$193
8400-0005	A pair of customer logos for cab supplied to E-One in a digital format.	$832
8400-0008	Star of life logo 12". Location: [#LOC].	$97
8400-0009	American Flag (EA). Approx size: 7"H x 14"W. Location: [#LOC]	$111
8400-0010	Install customer logo from an existing E-ONE design (EA). Location: [#LOC]	$119
8400-0011	Vision flag on officer canopy window.	$268
8400-0012	Star of life logo 22.5". Location: [#LOC]	$192
8400-0013	Signgold Fleur de Lis 5" logo (PR) with black outline. Location: [#LOC].	$192
8400-0015	Install customer supplied logos on rear cab doors.	$193
8400-0017	A customer logo supplied to E-ONE in a digital format. Location: [#LOC].	$294
8400-0018	Star of life logo 20". Location: (1) each side centered on capony window.	$323
8400-0021	Label "NO SMOKING" with universal symbol 2"x6"; white background with red letters. Location: [#LOC].	$37
8400-0023	Install customer supplied logo. Location: [#LOC].	$67
8400-0024	Install up to 12" SignGold customer logo from an existing E-ONE design (EA). Location: [#LOC].	$178
8400-0025	A customer SignGold logo (up to 12") supplied to E-ONE in a digital format. Location: [#LOC].	$374
8400-0029	Reflective American Flag (PR) - wavy. Approx size: 12"H x 18"W. Location: [#LOC].	$220
8400-0033	Logo E-ONE (PR) on aerial lift cylinder. Logo to be sign gold material approx 14" long located midway along outward surface of cylinder.	$81
8400-0034	Vision flags (Canadian ribbon style) on canopy windows (PR).	$531
8400-0036	Star of life logo 20" (PR). Location: (1) each side centered between cab doors.	$323
8400-0037	Vision flags (state of Texas ribbon style) on canopy windows (PR).	$531
8400-0038	Vision flags (Canadian ribbon style) on rear cab door windows and side windows of vista extension (PR).	$531
8400-0039	Star of life logo 12" with black outline. Location: [#LOC].	$97
8400-0042	Vision 9/11 flag raising on canopy windows (PR).	$531
8400-0045	Yellow label with black lettering to read "Clear front bumper prior to tilting cab". Locate above cab tilt door.	$51
8400-0048	Install customer supplied logos/striping. Location: Sign plates lettering, logos on front cab doors, logo on officer side medical cabinet, lettering on rear cab doors and 911 logos on each side rear body doors. Install customer supplied 3/8" striping above and below 6" stripe and chassis stripe at paint break. See photos on file.	$675
8400-0049	American Flag (EA). Approx size: 16"H x 27"W. Location: Portable tank at rear and driver side of body.	$329
8400-0050	Vision 9/11 twin tower tribute on canopy windows (PR).	$531
8400-0052	Vision graphic on canopy windows (PR). Customer supplied to E-ONE in a digital format.	$735
8400-0053	Waving American Flag (EA). Approx size: 7"H x 14"W. Location: [#LOC].	$111
9000	**Delivery, Warranty, Service**	
9100-0049	5 year 160 series tandem rear axle warranty. Replaces standard 2 year warranty.	1006
9100-0050	5 year front axle warranty. Replaces standard 2 year warranty.	478
9100-0053	5 year 160 series single rear axle warranty. Replaces standard 2 year warranty.	632
9100-0054	15 Year/100,000 Mile Structural Warranty - Statement of Warranty.	5525
9100-0055	15 Year Stainless Steel Plumbing Warranty - Statement of Warranty.	2527
9100-0056	15 Year Limited Paint and Perforation Warranty - For Sikkens Paint.	12628
9100-0058	12 Year body non-pro-rated paint and perforation warranty, 10 year cab non-pro-rated paint and perforation warranty - For Sikkens Paint.	11415
9100-0064	Cummins 10 year 200,000 mile extended warranty.	1070
9100-0065	Cummins 10 year 200,000 mile extended warranty.	1605
9100-0066	Standard extended 3 year warranty body only.	3622
9100-0067	10 Year non prorated cab paint warranty.	8055
9100-0070	10 Year non prorated body paint warranty. For aerials, tandem axle tanker and tandem axle rescue products with aluminum body and pan doors.	15188
9100-0071	10 Year non prorated body paint warranty. For aerials, tandem axle tanker and tandem axle rescue products with aluminum body and all roll-up doors. (Painted roll-up doors covered under seperate warranty)	12700
9100-0074	10 Year non prorated body paint warranty. For aerials, tandem axle tanker and tandem axle rescue products with stainless steel body and pan doors.	9578
9300-0000	Vehicle familiarization aerial (Domestic).	5058
9300-0002	Aerial training manual (EA).	37
9300-0003	Waterous Compressed Air Foam System training.	3670

9300-0009	Manuals, Operator and Service CD-ROM.	379
9300-0010	Approval Drawings	1091
9300-0012	Pump panel approval drawings.	439
9300-0017	Manuals Printed (Set).	989
9300-0018	Manuals, Operator and Service CD-ROM (additional set).	56
9300-0020	Translated Manuals CD-ROM to Arabic	7765
9300-0031	Dash panel layout approval drawings	570
9300-0032	Manuals printed (3).	1412
9300-0038	Manuals, operator, service and exploded view parts CD-ROM.	379
9300-0039	Manuals printed (set) with exploded view parts.	989
9300-0040	As built electrical drawings.	2651
9300-0041	As built plumbing drawings.	3313
9300-0045	Manuals Printed (Set). Includes (1) service, (1) parts and (5) operation manuals.	989
9300-0303	Approval Drawings - Top View of body and pump module section of the vehicle.	300
9300-0304	Manuals printed (1).	930
9300-0305	Advent/Hot Shot Foam System Training.	4681
9300-0306	Approval Drawings-Additional views. Top view of body and pump module areas. Detailed top view of the interior cab view layout.	599
9300-0311	Parts and service manuals for Cummins engine and Allison EVS transmission.	603
9300-0315	Vehicle familiarization aerial (Domestic) additional per day.	1125

Notes:

1) Availability of options are limited by other options selected, and not all options are available in every chassis/apparatus configuration. Selection of an option may require several of the above parts/items to complete the option package.

2) Certain options, alone or in combination with other options, may require heavier axle/suspension packages, longer frames, or reinforced frames at additional cost per the above price list.

3) To configure options, the E-One State Term Schedule authorized dealer will use quote configuration software to select the components necessary to effect the option, feature, or configuration requested and quote the total option price.

Fire Apparatus Quotation for:
STATE OF OHIO TERM SCHEDULE

Quotation Number: 57496 Rev: 7

Unit Description: WMST-COMM

Quote Description: Water Master Tanker Commercial Chassis

Salescode	Extended Description	Qty
Watermaster Tanker Base Model		
0502-0005	A Water Master apparatus being compliant to NFPA 2009 (plumbing as applicable) or ULC (as applicable) to be provided.	1
CHASSIS MODEL		
1005-0165	Chassis Prep International with Maxx Force engine and single rear axle. Includes rear bumper/tow eyes, high idle, master light switch and master battery switch.	1
1005-0475	International 4400 (2) door, 215" WB, front tow hooks, 14K & 26K axles with ESC, Officer side vertical exhaust with pipe guard, ABS brakes, 50 gal driver side fuel tank, (3) 1950 CCA batteries, 320 alternator, ember separator and AC.	1
1200-0117	International Maxx Force 330 HP engine with EVS3000 transmission. Includes Diamond Logix Exhaust Brake.	1
BUMPERS		
1160-0056	OEM chrome front bumper.	1
WHEEL OPTIONS		
1050-0050	Commercial chassis rims painted job color. For use with single rear axle.	1
TIRE OPTIONS		
1060-0117	RWC AirGuard LED tire pressure monitoring valve stem caps (6) for single rear axle applications.	1
ENGINES & TRANSMISSIONS		
1200-0122	Electronic speed limiting set to 60 MPH.	1
CHASSIS OPTIONS		
1680-0142	Two (2) hood-mounted air horns with driver and officer mounted foot switches. International.	1
1680-0143	The commercial chassis to have seat belt and chassis pre-wiring for NFPA seating indicator and vehicle data recorder.	1
CAB STEP OPTIONS		

1640-0014	Standard OEM chassis trim package International 4400 or 7400. Includes light mounting bracket.	1
SEATS		
1510-0142	Seating Package Two (2) Door International. Includes One (1) Gra-Mag fixed driver seat and (1) Gra-Mag fixed officer seat.	1
1510-0143	One (1) two person seating capacity tag- driver side area and two (2) seat belt warning tags- one (1) each cab door. For use with International chassis.	1
MISC INTERIOR CAB OPTIONS		
1685-0142	Main control console. Locate in cab centered between driver and officer. Includes NFPA in-cab controls/switching.	1
1685-0143	Cab gauge cluster with english dominant.	1
CAB ELECTRICAL OPTIONS		
1750-0347	Battery charger with indicator, inlet receptacle and air inlet with mounting plate. Locate to driver side of cab below driver door opening.	1
BODY MODEL		
3080-0209	Single axle body with 2000 gallon tank (with auxiliary rear tank fill). Includes driver side forward body access to vacuum pump, compartments L1/R1 with satin roll-up doors with header, driver and officer side compartment top storage areas (driver side includes double hose restraints) and rear body/bumper trim.	1
3080-0214	Anodes for water tank - (3) anodes located in bottom of water tank.	1
COVERS		
3305-0073	Vinyl crosslay cover. Includes mechanical hold-downs on top outer corners and quick release side flap hold downs. Cover color: Red.	1
PUMP MODULE		
3130-0253	Side mount pump module. Includes upper area for double stacked double preconnects.	1
LADDER STORAGE / RACKS		
3365-0150	Manually operated drop down rack on officer body. Secures portable folding tank with capacity of main tank on body.	1
MISC BODY OPTIONS		
3340-0504	E-ONE logo mounted (1) each side on forward body side rearward of water level gauge and (1) rear below the rear tank inlet and offset to driver side. Logos to be sized as applicable to available space.	1
PUMPS		
4005-0072	PTO for use with PM80 vacuum pump and EVS3000 transmission.	1
4005-0075	PTO for use with AP50 pump and EVS3000 transmission.	1
4005-0161	PM80 Vacuum Pump. Includes primary and secondary shut offs, (4) water level gauges- (3) body and (1) cab and the (3) inlets/outlets with switching.	1

PLUMBING KITS		
4410-0053	Plumbing kit with Hale AP50 (with officer side steamer) pump (500GPM). Includes (1) 2.5" Driver Side Discharge with droop and cap, (1) 2.5" Officer Side Discharge with droop and cap and (2) 1.5" Crosslay Discharges. The discharges are to be labeled and color coded in compliance with current NFPA.	1
PUMP OPTIONS		
4015-0093	The optional pump to be NFPA or ULC (as applicable) compliant. Includes primer, pump shift and indicators, (1) 2.5" driver side aux. intake with swing handle and test ports.	1
4015-0168	Engine cooler. For use with International 4400, 7400 and 7500 chassis.	1
4015-0186	Trident Pump Primer W/3 Barrel Push Button Control. (In place of standard primer.)	1
DISCHARGE OPTIONS		
4417-0185	Innovative Controls discharge and intake bezels with integral color code and verbiage for side mount pump panel.	1
PRESSURE GOVERNORS		
4465-0025	Class 1 TPG Plus pressure governor. Includes master intake and discharge gauges, water, oil, volt and tachometer for WaterMaster.	1
GAUGES		
4435-0141	Pump module discharge gauges (4) to be english dominant. For use with AP/MBP pumps.	1
ELECTRICAL SYSTEMS		
5010-0020	Body and cab electrical system.	1
5150-0089	Vehicle data recorder - 2009 NFPA compliant. Includes occupant detection with display. Display location on cab dash near the transmission shifter.	1
LIGHT BARS		
5380-0102	Whelen Justice model JE2NFPA 56" with MKEZ7 mounts. All LED (forward facing) lightbar.	1
WARNING LIGHT PACKAGES		
5550-0118	Whelen LED lower level cab warning light package. Includes light heads wiith bezels located (1) each side of hood area and (1) each side forward facing mounted in grill area.	1
5550-0119	Whelen LED lower level body warning light package. Includes (6) LED light heads located (1) each side forward of the rear wheel well, (1) each side rearward of the rear wheel well and (1) each side on rear of body down low below the taillights (offset outboard).	1
WARNING LIGHTS		
5600-0204	Whelen beacon Model RB6 (PR)- red driver/amber officer. Location: upper rear tank.	1

DOT LIGHTING		
5150-0088	DOT STT/BU lighting. Includes red LED stop/tail/turn and clear incandescent back-up lights. Lights mounted horizontally on the rear of the body	1
LIGHTS - COMPARTMENT, STEP & GROUND		
5380-0108	Cab (WHLN) LED ground lighting package with LED step lighting. Includes (1) Whelen light per side below the cab lower steps and (1) LED step light below the lower area of the cab for step lighting.	1
5380-0109	LED (Whelen) underbody ground lighting. Includes lighting below the forward body and below the rear body.	1
5380-0110	LED (Whelen) compartment light package. For use in L1 and R1 compartments.	1
LIGHTS - NON-WARNING		
5400-0122	(7) incandescent scene lighting package. Locate lights - (1) forward area of tank, (2) each side of tank and (2) at rear of tank/body.	1
CAMERAS / INTERCOM		
5350-0106	Camera system. Includes in-cab mounted monitor and officer side and rear body mounted cameras.	1
MISC ELECTRICAL		
5110-0049	NFPA cab siren and speaker (WHLN) package. Includes (1) siren with (1) speaker officer side behind bumper cut-out (includes mounting bracket).	1
HOSE / NOZZLES		
7700-0100	Adaptor, hose and strainer package. For use with vacuum pump system. For use with 2000 thru 4000 gallon tanks only.	1
7700-0101	Aluminum 6" storz x 5" NH female thread swivel adaptor. For use with AP50 Pump Inlet.	1
MISC LOOSE EQUIPMENT		
7900-0165	DOT driveaway kit. Includes three (3) triangular reflectors with case.	1
EXTERIOR PAINT		
8100-0196	Cab paint FLNA 3225 Red. International NAV2931	1
STRIPING		
8300-0106	Chevron "A" style 6" Scotchlite striping on rear of tank. Colors to be Yellow/Red.	1
8300-0107	4" White/Red Scotchlite stripe. Locate white on cab with bottom of stripe even with bottom of cab. The red is to be straight on the body side storage trays.	1
WARRANTY / STANDARD & EXTENDED		
9100-0039	1 year full warranty.	1
9100-0043	10 Year stainless steel plumbing warranty.	1
SUPPORT, DELIVERY, INSPECTIONS AND MANUALS		
9300-0316	Fire Apparatus Safety Guide published by FAMA, latest edition.	1

PRICE	2016 WATERMASTER TANKER - INTERNATIONAL 2DR CHASSIS	$241,714

STATE OF OHIO TERM SCHEDULE

4200 SURFACE RD
COLUMBUS, OH 43228

Quote No: 57496

3/26/2015

Quote Rev:7 Drawing Rev:3

2000 GALLON TANK

500 GPM PUMP

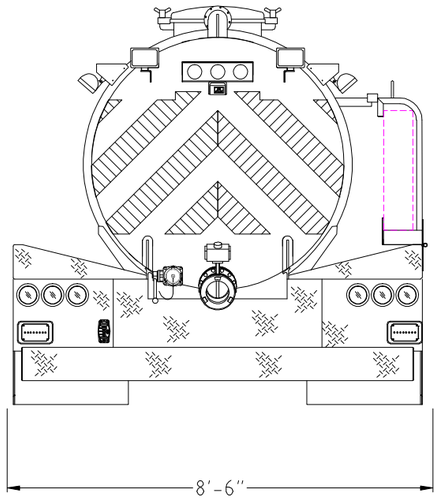

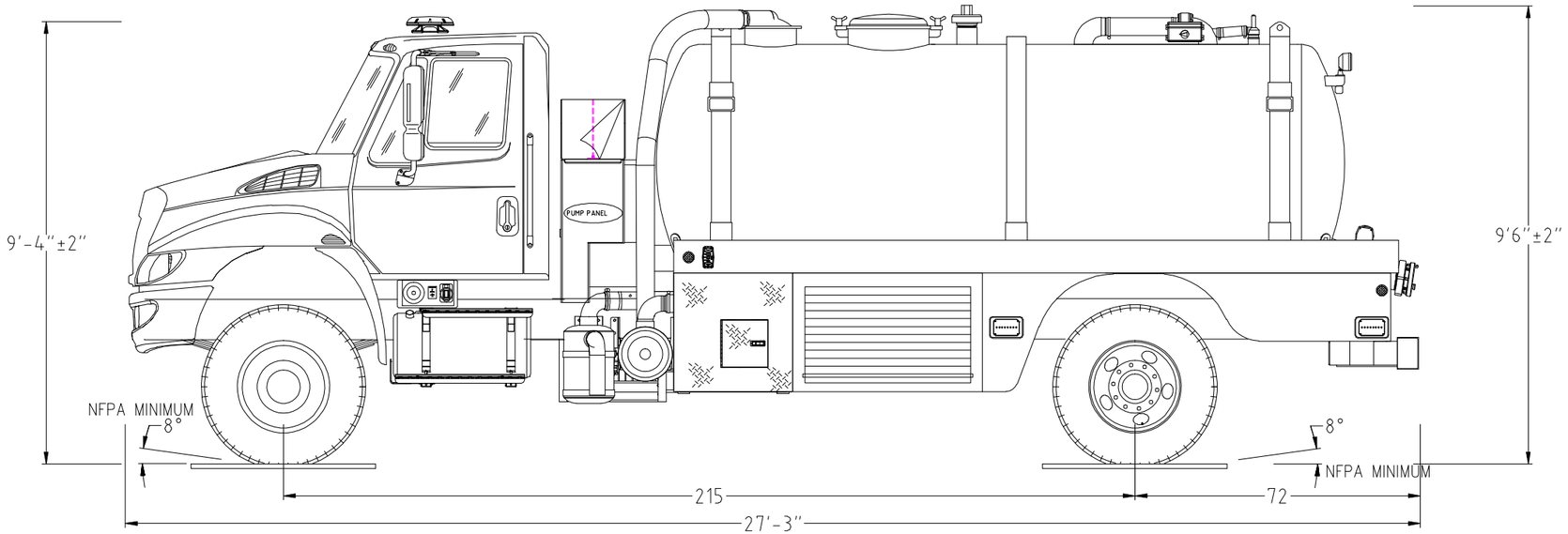

POWERED BY EZDRAW

Notice: This drawing provides a GENERAL REPRESENTATION of the vehicle configuration and should be used for evaluation purposes. The respective dimensions shown,including overall height and length, are estimates and may vary due to manufacturing processes. All other items such as lighting and fixtures, plumbing, compartmentation, and other generally assembled details are shown for REFERENCE ONLY and may not be a direct reflection of the final truck configuration. In ALL situations where this drawing may conflict with the specifications, THE SPECIFICATIONS, AS REFLECTED IN THE APPROVED SHOP ORDER, SHALL PREVAIL. Unless otherwise specified, the proposed apparatus will be manufactured to the latest NFPA recommendations as well as other applicable federally regulated safety regulations. E-One reserves the right to engineer and incorporate design improvements and changes without notice, while adhering to the intent of the specification.

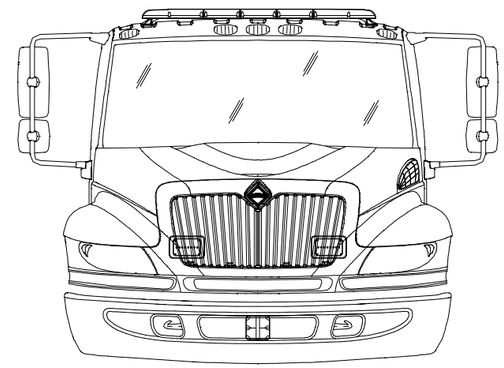

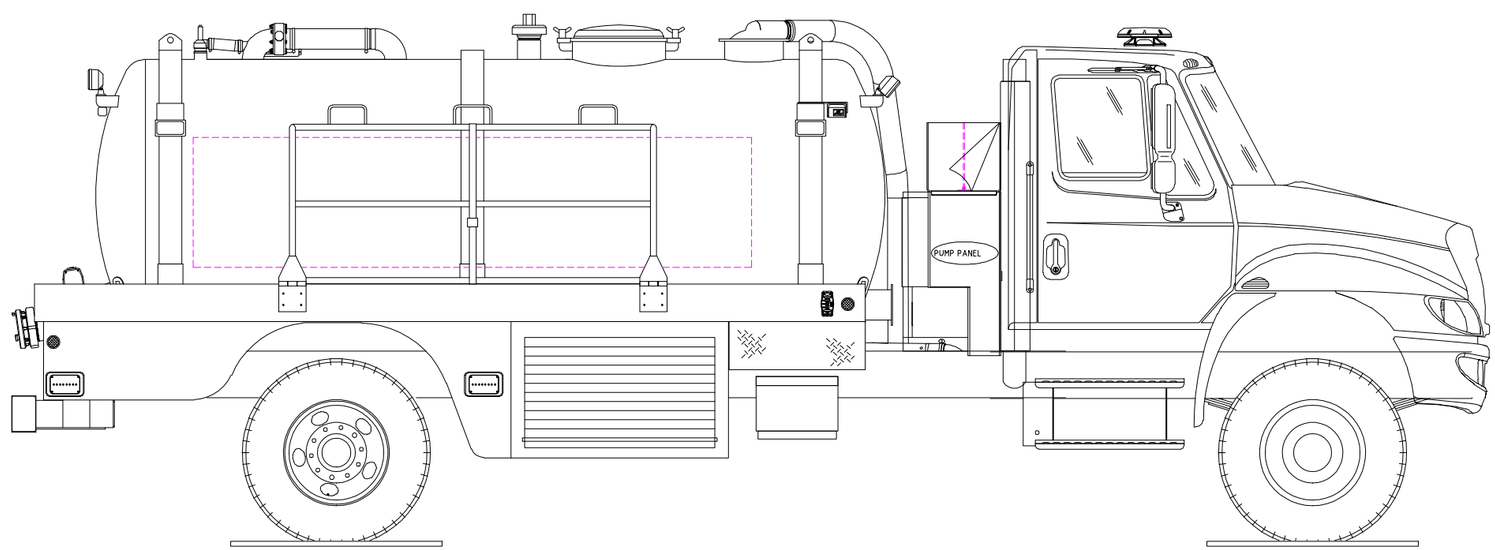

POWERED BY

EZDRAW

Fire Apparatus Quotation for:
STATE OF OHIO TERM SCHEDULE

Quotation Number: 57497 Rev: 7

Unit Description: WMST-COMM

Quote Description: Water Master Tanker Commercial Chassis

Salescode	Extended Description	Qty
Watermaster Tanker Base Model		
0502-0005	A Water Master apparatus being compliant to NFPA 2009 (plumbing as applicable) or ULC (as applicable) to be provided.	1
CHASSIS MODEL		
1005-0166	Chassis Prep International with Maxx Force engine and tandem rear axle. Includes rear bumper/tow eyes, high idle, master light switch and master battery switch.	1
1005-0479	International 7400 (2) door, 242" WB, front tow hooks, 18K & 40K tandem axle with ESC, Officer side vertical exhaust with pipe guard, ABS brakes, 50 gal driver side fuel tank, (3) 1950 CCA batteries, 320 alternator, ember separator and AC.	1
1200-0117	International Maxx Force 330 HP engine with EVS3000 transmission. Includes Diamond Logix Exhaust Brake.	1
BUMPERS		
1160-0056	OEM chrome front bumper.	1
WHEEL OPTIONS		
1050-0052	International chassis rims painted job color. For use with tandem rear axle.	1
TIRE OPTIONS		
1060-0119	RWC AirGuard LED tire pressure monitoring valve stem caps (10) for tandem rear axle applications.	1
ENGINES & TRANSMISSIONS		
1200-0122	Electronic speed limiting set to 60 MPH.	1
CHASSIS OPTIONS		
1680-0142	Two (2) hood-mounted air horns with driver and officer mounted foot switches. International.	1
1680-0143	The commercial chassis to have seat belt and chassis pre-wiring for NFPA seating indicator and vehicle data recorder.	1

CAB STEP OPTIONS		
1640-0014	Standard OEM chassis trim package International 4400 or 7400. Includes light mounting bracket.	1
SEATS		
1510-0142	Seating Package Two (2) Door International. Includes One (1) Gra-Mag fixed driver seat and (1) Gra-Mag fixed officer seat.	1
1510-0143	One (1) two person seating capacity tag- driver side area and two (2) seat belt warning tags- one (1) each cab door. For use with International chassis.	1
MISC INTERIOR CAB OPTIONS		
1685-0142	Main control console. Locate in cab centered between driver and officer. Includes NFPA in-cab controls/switching.	1
1685-0143	Cab gauge cluster with english dominant.	1
CAB ELECTRICAL OPTIONS		
1750-0347	Battery charger with indicator, inlet receptacle and air inlet with mounting plate. Locate to driver side of cab below driver door opening.	1
BODY MODEL		
3080-0211	Tandem axle body with 3000 gallon tank (with auxiliary rear tank fill). Includes driver side forward body access to vacuum pump, compartments L1/R1 with satin roll-up doors with header, driver and officer side compartment top storage areas (driver side includes double hose restraints) and rear body/bumper trim.	1
3080-0214	Anodes for water tank - (3) anodes located in bottom of water tank.	1
COVERS		
3305-0073	Vinyl crosslay cover. Includes mechanical hold-downs on top outer corners and quick release side flap hold downs. Cover color: Red.	1
PUMP MODULE		
3130-0253	Side mount pump module. Includes upper area for double stacked double preconnects.	1
LADDER STORAGE / RACKS		
3365-0150	Manually operated drop down rack on officer body. Secures portable folding tank with capacity of main tank on body.	1
MISC BODY OPTIONS		
3340-0504	E-ONE logo mounted (1) each side on forward body side rearward of water level gauge and (1) rear below the rear tank inlet and offset to driver side. Logos to be sized as applicable to available space.	1
PUMPS		
4005-0073	PTO for use with PM100 vacuum pump and EVS3000 transmission.	1
4005-0075	PTO for use with AP50 pump and EVS3000 transmission.	1
4005-0162	PM100 Vacuum Pump (for use with AP or MBP pumps only). Includes primary and	1

	secondary shut offs, (4) water level gauges- (3) body and (1) cab and the (3) inlets/outlets with switching.	
PLUMBING KITS		
4410-0053	Plumbing kit with Hale AP50 (with officer side steamer) pump (500GPM). Includes (1) 2.5" Driver Side Discharge with droop and cap, (1) 2.5" Officer Side Discharge with droop and cap and (2) 1.5" Crosslay Discharges. The discharges are to be labeled and color coded in compliance with current NFPA.	1
PUMP OPTIONS		
4015-0093	The optional pump to be NFPA or ULC (as applicable) compliant. Includes primer, pump shift and indicators, (1) 2.5" driver side aux. intake with swing handle and test ports.	1
4015-0168	Engine cooler. For use with International 4400, 7400 and 7500 chassis.	1
4015-0186	Trident Pump Primer W/3 Barrel Push Button Control. (In place of standard primer.)	1
DISCHARGE OPTIONS		
4417-0185	Innovative Controls discharge and intake bezels with integral color code and verbiage for side mount pump panel.	1
PRESSURE GOVERNORS		
4465-0025	Class 1 TPG Plus pressure governor. Includes master intake and discharge gauges, water, oil, volt and tachometer for WaterMaster.	1
GAUGES		
4435-0141	Pump module discharge gauges (4) to be english dominant. For use with AP/MBP pumps.	1
ELECTRICAL SYSTEMS		
5010-0020	Body and cab electrical system.	1
5150-0089	Vehicle data recorder - 2009 NFPA compliant. Includes occupant detection with display. Display location on cab dash near the transmission shifter.	1
LIGHT BARS		
5380-0102	Whelen Justice model JE2NFPA 56" with MKEZ7 mounts. All LED (forward facing) lightbar.	1
WARNING LIGHT PACKAGES		
5550-0118	Whelen LED lower level cab warning light package. Includes light heads wiith bezels located (1) each side of hood area and (1) each side forward facing mounted in grill area.	1
5550-0119	Whelen LED lower level body warning light package. Includes (6) LED light heads located (1) each side forward of the rear wheel well, (1) each side rearward of the rear wheel well and (1) each side on rear of body down low below the taillights (offset outboard).	1
WARNING LIGHTS		

5600-0204	Whelen beacon Model RB6 (PR)- red driver/amber officer. Location: upper rear tank.	1
DOT LIGHTING		
5150-0088	DOT STT/BU lighting. Includes red LED stop/tail/turn and clear incandescent back-up lights. Lights mounted horizontally on the rear of the body	1
LIGHTS - COMPARTMENT, STEP & GROUND		
5380-0108	Cab (WHLN) LED ground lighting package with LED step lighting. Includes (1) Whelen light per side below the cab lower steps and (1) LED step light below the lower area of the cab for step lighting.	1
5380-0109	LED (Whelen) underbody ground lighting. Includes lighting below the forward body and below the rear body.	1
5380-0110	LED (Whelen) compartment light package. For use in L1 and R1 compartments.	1
LIGHTS - NON-WARNING		
5400-0122	(7) incandescent scene lighting package. Locate lights - (1) forward area of tank, (2) each side of tank and (2) at rear of tank/body.	1
CAMERAS / INTERCOM		
5350-0106	Camera system. Includes in-cab mounted monitor and officer side and rear body mounted cameras.	1
MISC ELECTRICAL		
5110-0050	NFPA cab siren and speaker (WHLN) package. Includes (1) siren with (1) speaker located center in front bumper (includes mounting bracket).	1
HOSE / NOZZLES		
7700-0100	Adaptor, hose and strainer package. For use with vacuum pump system. For use with 2000 thru 4000 gallon tanks only.	1
7700-0101	Aluminum 6" storz x 5" NH female thread swivel adaptor. For use with AP50 Pump Inlet.	1
MISC LOOSE EQUIPMENT		
7900-0165	DOT driveaway kit. Includes three (3) triangular reflectors with case.	1
EXTERIOR PAINT		
8100-0196	Cab paint FLNA 3225 Red. International NAV2931	1
STRIPING		
8300-0106	Chevron "A" style 6" Scotchlite striping on rear of tank. Colors to be Yellow/Red.	1
8300-0107	4" White/Red Scotchlite stripe. Locate white on cab with bottom of stripe even with bottom of cab. The red is to be straight on the body side storage trays.	1
WARRANTY / STANDARD & EXTENDED		
9100-0039	1 year full warranty.	1
9100-0043	10 Year stainless steel plumbing warranty.	1

SUPPORT, DELIVERY, INSPECTIONS AND MANUALS			
9300-0316	Fire Apparatus Safety Guide published by FAMA, latest edition.	1	
PRICE	2016 E-ONE WATERMASTER TA TANKER - INTERNATIONAL 2DR CHASSIS		$260,759

STATE OF OHIO TERM SCHEDULE

4200 SURFACE RD
COLUMBUS, OH 43228

Quote No: 57497

3/26/2015

Quote Rev:7 Drawing Rev:3

3000 GALLON TANK

500 GPM PUMP

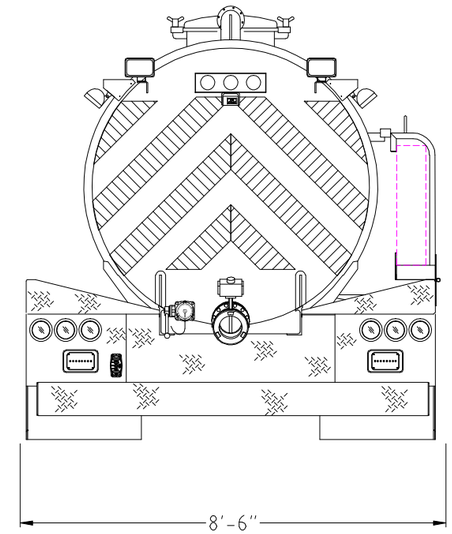

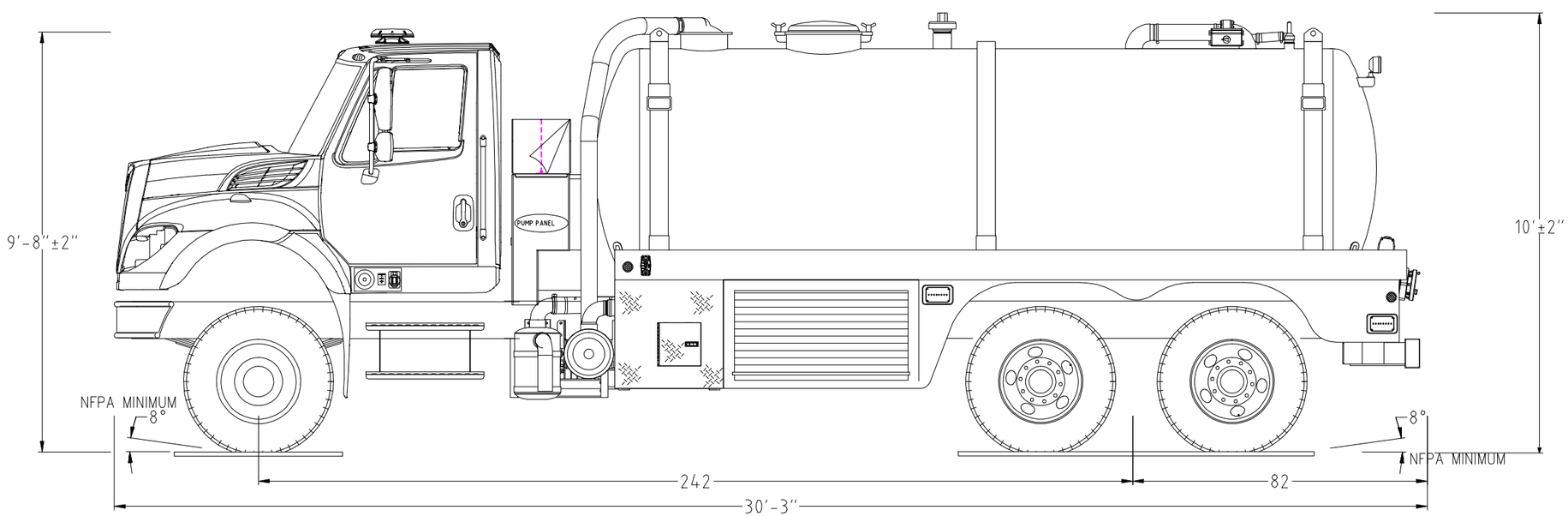

POWERED BY EZDRAW

Notice: This drawing provides a GENERAL REPRESENTATION of the vehicle configuration and should be used for evaluation purposes. The respective dimensions shown,including overall height and length, are estimates and may vary due to manufacturing processes. All other items such as lighting and fixtures, plumbing, compartmentation, and other generally assembled details are shown for REFERENCE ONLY and may not be a direct reflection of the final truck configuration. In ALL situations where this drawing may conflict with the specifications, THE SPECIFICATIONS, AS REFLECTED IN THE APPROVED SHOP ORDER, SHALL PREVAIL. Unless otherwise specified, the proposed apparatus will be manufactured to the latest NFPA recommendations as well as other applicable federally regulated safety regulations. E-One reserves the right to engineer and incorporate design improvements and changes without notice, while adhering to the intent of the specification.

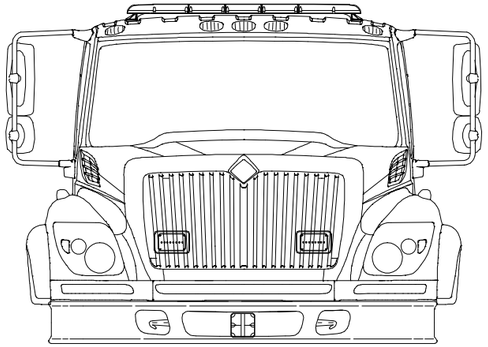

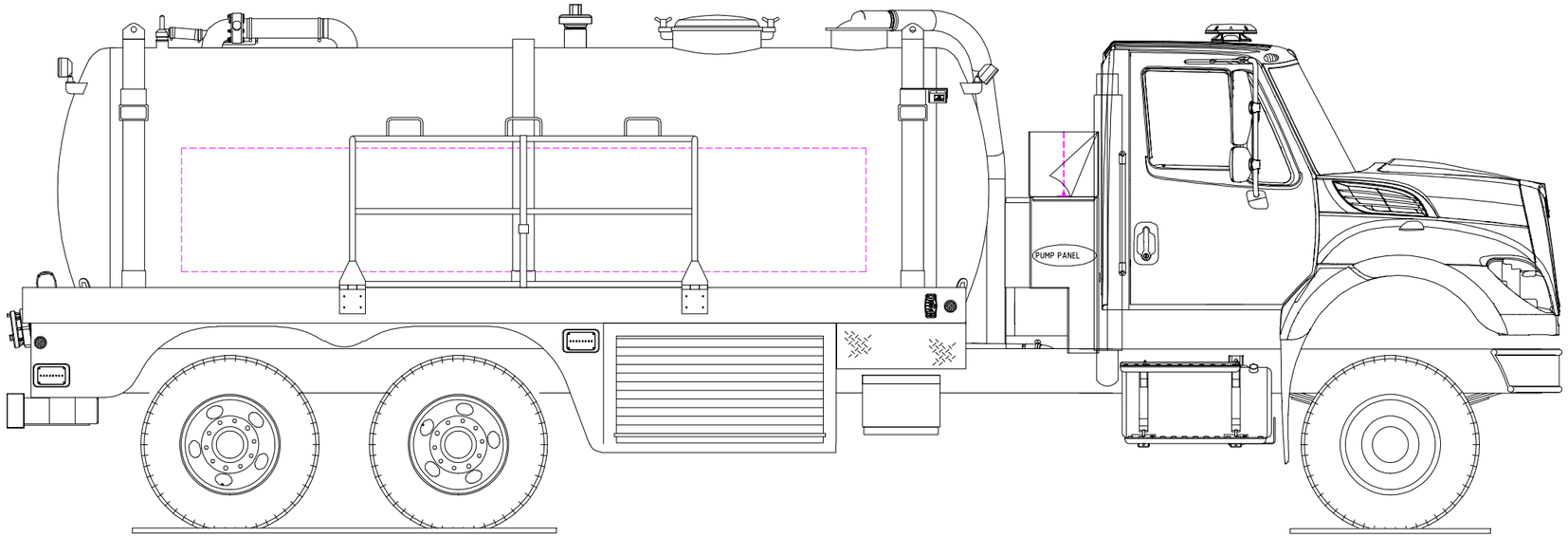

POWERED BY

EZDRAW

E-ONE OHIO STATE TERM SCHEDULE 2016 OPTIONS PRICE BOOK
WATERMASTER TANKERS - COMMERCIAL CHASSIS

1000	Chassis	
1005-0475	International 4400 (2) door, 215" WB, front tow hooks, 14K & 26K axles with ESC, Officer side vertical exhaust with pipe guard, ABS brakes, 50 gal driver side fuel tank, (3) 1950 CCA batteries, 320 alternator, ember separator and AC.	$87,077
1005-0476	International 4400 (2) door, 232" WB, front tow hooks, 14.6K & 26K axles with ESC, Officer side vertical exhaust with pipe guard, ABS brakes, 50 gal driver side fuel tank, (3) 1950 CCA batteries, 320 alternator, ember separator and AC.	$87,677
1005-0477	International 4400 (2) door, 221" WB, front tow hooks, 14K & 30K axles with ESC, Officer side vertical exhaust with pipe guard, ABS brakes, 50 gal driver side fuel tank, (3) 1950 CCA batteries, 320 alternator, ember separator and AC.	$88,287
1005-0479	International 7400 (2) door, 242" WB, front tow hooks, 18K & 40K tandem axle with ESC, Officer side vertical exhaust with pipe guard, ABS brakes, 50 gal driver side fuel tank, (3) 1950 CCA batteries, 320 alternator, ember separator and AC.	$95,927
1005-0480	International 7400 (2) door, 258" WB, front tow hooks, 18K & 40K tandem axle with ESC, Officer side vertical exhaust with pipe guard, ABS brakes, 50 gal driver side fuel tank, (3) 1950 CCA batteries, 320 alternator, ember separator and AC.	$96,094
1005-0481	International 7400 (2) door, 242" WB, front tow hooks, 18K & 46K tandem axle with ESC, Officer side vertical exhaust with pipe guard, ABS brakes, 50 gal driver side fuel tank, (3) 1950 CCA batteries, 320 alternator, ember separator and AC.	$99,585
1005-0482	International 7400 (2) door, 258" WB, front tow hooks, 18K & 46K tandem axle with ESC, Officer side vertical exhaust with pipe guard, ABS brakes, 50 gal driver side fuel tank, (3) 1950 CCA batteries, 320 alternator, ember separator and AC.	$99,585
1005-0483	International 7600 (2) door, 242" WB, front tow hooks, 20K & 46K tandem axle with ESC, Officer side vertical exhaust with pipe guard, ABS brakes, 50 gal driver side fuel tank, (3) 1950 CCA batteries, 320 alternator, ember separator and AC.	$131,203
1005-0484	International 7600 (2) door, 258" WB, front tow hooks, 20K & 46K tandem axle with ESC, Officer side vertical exhaust with pipe guard, ABS brakes, 50 gal driver side fuel tank, (3) 1950 CCA batteries, 320 alternator, ember separator and AC.	$131,203
1005-0486	International 7400 (2) door, 242" WB, front tow hooks, 18K & 40K tandem axle with ESC, Officer side vertical exhaust with pipe guard, ABS brakes, 50 gal driver side fuel tank, (3) 2100 CCA batteries, 320 alternator, ember separator and AC.	$12,331
1005-0572	International 7600 (2) door, 258" WB, front tow hooks, 20K & 46K tandem axle with ESC, Officer side vertical exhaust with pipe guard, ABS brakes, 50 gal driver side fuel tank, (3) batteries 2100 CCA total, 320 alternator, ember separator and AC.	$134,513
1005-0579	Freightliner M2 112 (2) door, 244" WB, DD 13 410HP engine with Jacobs compression brake and EVS4000 transmission, dual air horns with (2) foot switches and dash button controls, front tow hooks, 20K & 40K tandem axle with ESC, aluminum wheels, 1500 sq inch radiator, Officer side vertical exhaust, ABS brakes, 50 gal driver side fuel tank, 6 gal diesel exhaust fluid tank, (3) 3375 CCA total batteries, 275 alternator, ember separator, AM/FM radio with WB/CD and Speakers and AC.	$137,703
1005-0581	International 4400 (2) door, 221" WB, front tow hooks, 14.6K & 30K axles with ESC, Officer side vertical exhaust with pipe guard, ABS brakes, 50 gal driver side fuel tank, (3) 1950 CCA batteries, 320 alternator, ember separator and AC.	$90,011
1005-0582	International 7400 (2) door, 242" WB, front tow hooks, 18K & 40K tandem axle with ESC, Officer side vertical exhaust with pipe guard, ABS brakes, 50 gal driver side fuel tank, (3) 2100 CCA batteries, 320 alternator, ember separator and AC.	$101,532
1005-0584	Kenworth T800 (2) door, 277" WB, ISX15 500HP engine with compression brake, front tow hooks, 20K & 46K tandem axle with ESP, aluminum wheels, 1440 sq inch radiator, Dual vertical exhaust with chrome air breathers, ABS brakes, 60 gal driver side fuel tank, 11 gal diesel exhaust fluid tank, (3) 2100 CCA total batteries, 270 alternator, ember separator,and AC.	$142,829
1005-0660	Freightliner 114SD (2) door, 260 inch WB, DD13 450HP engine with Jacobs compression brake and EVS4000 transmission, stuttertone hood mntd airhorns with (2) foot switches, front tow hooks, 20K & 40K tandem axle, Alcoa alum wheels, 1500 sq inch radiator, Officer side vertical exhaust, ABS with ESC brake system, 50 gal driver side fuel tank, 6 gal diesel exhaust fluid tank, (3) 3375 CCA total batteries, 320 amp alternator, ember separator, Air Conditioning.	$131,672
1005-0662	Freightliner 114SD (2) door, 260 inch WB, DD13 450HP engine with Jacobs compression brake and EVS4000 transmission, stuttertone hood mntd airhorns with (2) foot switches, front tow hooks, 20K & 40K tandem axle, Alcoa alum wheels, 1500 sq inch radiator, Officer side vertical exhaust, ABS with ESC brake system, 50 gal driver side fuel tank, 6 gal diesel exhaust fluid tank, (3) 3375 CCA total batteries, 320 amp alternator, ember separator, Air Conditioning.	$131,160
1005-0664	Kenworth T440 (2) door, 244" WB, Paccar PX-9 380 HP engine with compression brake, front tow hooks, 18K & 40K tandem axle with ESP and interaxle diff lock with posi trac on both tandem axles, Onspot tire chains on forward tandem axle, aluminum wheels, 1300 sq inch radiator, Single vertical exhaust RH back of cab, ABS brakes, 60 gal driver side fuel tank, 11 gal diesel exhaust fluid tank, (3) 2100 CCA total batteries located in box RH side 53 inches behind cab, 320 amp alternator, ember separator,and AC.	$127,053
1005-0697	International 7400 (2) door, 215" WB, front tow hooks, 14K & 26K axles with ESC, Officer side vertical exhaust with pipe guard, ABS brakes, 50 gal driver side fuel tank, (3) 1950 CCA batteries, 320 alternator, ember separator and AC.	$90,438
1005-0698	International 7400 (2) door, 232" WB, front tow hooks, 14K & 26K axles with ESC, Officer side vertical exhaust with pipe guard, ABS brakes, 50 gal driver side fuel tank, (3) 1950 CCA batteries, 320 alternator, ember separator and AC.	$90,438
1005-0699	International 7400 (2) door, 221" WB, front tow hooks, 14K & 30K axles with ESC, Officer side vertical exhaust with pipe guard, ABS brakes, 50 gal driver side fuel tank, (3) 1950 CCA batteries, 320 alternator, ember separator and AC.	$91,759

1005-0700	International 7400 (2) door, 242" WB, front tow hooks, 18K & 40K tandem axle with ESC, Officer side vertical exhaust with pipe guard, ABS brakes, 50 gal driver side fuel tank, (3) 1950 CCA batteries, 320 alternator, ember separator and AC.	$97,976
1005-0701	International 7400 (2) door, 258" WB, front tow hooks, 18K & 40K tandem axle with ESC, Officer side vertical exhaust with pipe guard, ABS brakes, 50 gal driver side fuel tank, (3) 1950 CCA batteries, 320 alternator, ember separator and AC.	$97,976
1005-0702	International 7400 (2) door, 242" WB, front tow hooks, 18K & 46K tandem axle with ESC, Officer side vertical exhaust with pipe guard, ABS brakes, 50 gal driver side fuel tank, (3) 1950 CCA batteries, 320 alternator, ember separator and AC.	$100,759
1005-0703	International 7400 (2) door, 258" WB, front tow hooks, 18K & 46K tandem axle with ESC, Officer side vertical exhaust with pipe guard, ABS brakes, 50 gal driver side fuel tank, (3) 1950 CCA batteries, 320 alternator, ember separator and AC.	$100,759
1005-0704	International 7600 (2) door, 242" WB, front tow hooks, 20K & 46K tandem axle with ESC, Officer side vertical exhaust with pipe guard, ABS brakes, 50 gal driver side fuel tank, (3) 1950 CCA batteries, 320 alternator, ember separator and AC.	$126,808
1005-0705	International 7600 (2) door, 258" WB, front tow hooks, 20K & 46K tandem axle with ESC, Officer side vertical exhaust with pipe guard, ABS brakes, 50 gal driver side fuel tank, (3) 1950 CCA batteries, 320 alternator, ember separator and AC.	$127,134
1005-0706	International 7400 (2) door, 246" WB, front tow hooks, 18K & 40K tandem axle with ESC, Officer side vertical exhaust with pipe guard, ABS brakes, 50 gal driver side fuel tank, (3) 1950 CCA batteries, 320 alternator, ember separator and AC. For use with heated valve collars.	$98,309
1020-0034	Chassis prep for a Kenworth chassis with tandem rear axle. Includes fast idle control/switching, master lighting switch, master battery switch and rear bumper/two eyes mounting.	$1,453
1025-0082	Driver Controlled Dif Lock. For use with International chassis with 26K rear axle.	$797
1025-0083	Driver Controlled Dif Lock. For use with International chassis with 30K rear axle.	$894
1025-0084	Driver Controlled Dif Lock (Rearward rear axle). For use with International chassis with 40K tandem rear axle.	$865
1025-0085	Driver Controlled Dif Lock (Rearward rear axle). For use with International chassis with 46K tandem rear axle.	$675
1050-0051	International chassis rims aluminum. For use with single rear axle.	$1,511
1050-0053	International chassis rims aluminum. For use with tandem rear axle.	$2,099
1050-0073	Wheel trim package. For use with steel or aluminum wheels.	$529
1060-0056	Tire pressure monitoring valve stem caps. For use with a chassis with 14K front and 30K rear axle.	$53
1060-0057	Tire pressure monitoring valve stem caps. For use with a chassis with 18K front and 40K tandem rear axle.	$72
1060-0058	Tire pressure monitoring valve stem caps. For use with a chassis with 18K front and 46K tandem rear axle.	$72
1060-0059	Tire pressure monitoring valve stem caps. For use with a chassis with 20K front and 46K tandem rear axle.	$72
1060-0084	Tire pressure monitoring valve stem caps. For use with a chassis with 14K front and 40K tandem rear axle.	$72
1060-0088	Tire pressure monitoring valve stem caps. For use with a chassis with 20K front and 40K tandem rear axle.	$171
1060-0117	RWC AirGuard LED tire pressure monitoring valve stem caps (6) for single rear axle applications.	$202
1060-0119	RWC AirGuard LED tire pressure monitoring valve stem caps (10) for tandem rear axle applications.	$322
1060-0123	RWC AirGuard LED tire pressure monitoring valve stem caps (2) front only. For use with rear axle Crossfire equalization systems.	$81
1110-0000	Inlet for air system. Location: [#LOC].	$435
1110-0118	Inlet for air system. Includes weather proof box and Hubbel [#COL] cover. Location: [#LOC].	$555
1110-0119	Isolated air tank. Includes pressure protection valve. International chassis only.	$111
1160-0083	24" Bumper extension with 1/8" diamond plate gravel shield, 10" front stainless steel bumper with location for NFPA speaker and dual Hadley air horns with driver and officer foot switch controls.	$3,709
1160-0107	10" Stainless steel front bumper with driver side cut-out for NFPA speaker. Includes frame mounted painted tow hooks, 20" bumper extension (1/8" diamond plate) with center-mounted hose storage tray with red vinyl cover.	$3,453
1200-0123	Engine block heater. Locate receptacle below the driver side cab door.	$219
1200-0254	International N10 350 HP engine SCR with EVS3000 transmission. Includes Diamond Logix Exhaust Brake.	$3,988
1200-0269	T handle transmission selector for International chassis only.	$339
1200-0290	International Navistar N10 SCR 350hp@2200 RPM/1150ftlbs torque@1200 RPM 2200 RPM GOV in place of standard engine.	$3,988
1225-0040	Vertical exhaust to have: TAIL PIPE (1) turnback type Bright for single exhaust and Muffler/Tail Pipe Guard (1) Bright Stainless Steel. International 7400 chassis.	$353
1510-0141	Seating Package Two (2) Door International. Includes One (1) National Brand air suspended driver seat and (1) National Brand air suspended officer seat.	$403
1510-0193	Seating Package Two (2) Door International. Includes one (1) 911 hi-back air ride suspension driver seat and one (1) 911 hi-back fixed SCBA officer seat.	$524
1510-0198	Seating Package Two (2) Door International. Includes One (1) National Brand air suspended driver seat and (1) National Brand fixed officer seat.	$452
1510-0208	Seating Package Two (2) Door Freightliner. Includes One (1) 911 Universal brand high back air suspended driver seat and (1) 911 Universal brand fixed officer seat. NFPA compliant seat sensors and wiring included in seats.	$403
1510-0218	Seating Package Two (2) Door International. Includes One (1) 911 air ride driver seat and (1) 911 non-suspended SCBA officer seat.	$1,594

1510-0236	Seating Package Two (2) Door Freightliner. Includes One (1) 911 Universal brand high back air suspended driver seat and (1) 911 Universal brand high back air suspended officer seat. NFPA compliant seat sensors and wiring included in seats.	$403
1510-0271	Seating Package Two (2) Door International. Includes One (1) National Brand air suspended driver seat and (1) National Brand standard suspension officer seat.	$153
1535-0113	(2) Cabinets rear of commercial extended cab. Sized in height, width and depth as space within cab permits while allowing for installation requirements for a commercial chassis. Each cabinet to include (1) LED strip light mounted as applicable. Cabinets to be bolt-in and have zolatone grey interior and exterior finish.	$3,972
1640-0010	Diamond plate trim package for a (2) door International 4400. Includes driver and officer step trim that will utilize pieces already supplied by the OEM.	$1,456
1640-0011	Diamond plate trim package for a (2) door International 7400 or 7600. Includes driver and officer step trim that will utilize pieces already supplied by the OEM.	$1,456
1640-0017	Diamond plate trim package for a (2) door extended International 7500. Includes driver side and an officer side trim and stepping areas that will utilize pieces already supplied by the OEM. The rearward area below the extended cab will be formed diamond plate with support framing.	$2,686
1640-0020	Diamond plate trim package for a (2) door Freightliner M2 106/112. Includes driver and officer step trim that will utilize pieces already supplied by the OEM.	$1,456
1640-0027	Diamond plate trim package for a (2) door Freightliner 114SD. Includes driver and officer step trim that will utilize pieces already supplied by the OEM.	$2,044
1640-0033	Diamond plate trim package for a (2) door Freightliner 112/114SD. Includes driver and officer step trim that will utilize pieces already supplied by the OEM. For use with Hyd drive pump systems, includes extended lower steps and brackets supports for service and access to hydraulic reservoir.	$2,616
1670-0049	Pair of hood mounted Lang Mekra convex mirrors (heated with black finish). International chassis only.	$370
1675-0155	Painted visor for International 4400 cab. Option 16XWD.	$225
1675-0172	Aerodynamic, painted roof color for International 4400 cab; Includes integral clearance/marker lights.Option 0016XWD (Tradition ES).	$185
1680-0138	Cab step area trim plates provided on the driver and officer side.	$219
1680-0139	Cab step area trim plates provided on the driver and officer side.	$219
1680-0140	Cab step area trim plates provided on the driver and officer side.	$219
1680-0142	Two (2) hood-mounted air horns with driver and officer mounted foot switches. International.	$917
1680-0180	Two (2) hood-mounted air horns with driver and officer mounted foot switches. Freightliner.	$820
1680-0185	RUDD (Rotogrip) 18 strand automatic tire chains. Includes switch in cab.	$3,535
1680-0205	Cab windows and locks to be power operated. Two (2) door International.	$627
1680-0240	AM/FM stereo with weatherband, clock, auxiliary input, includes multiple speakers, International/ Water Master.	$309
1680-0296	Chassis Trim Package for a (2) door Kenworth T440.	$1,516
1680-0309	Muncie digital tachometer. Locate display in cab visible to driver.	$783
1685-0144	Cab gauge cluster with metric dominant.	$332
1685-0191	Diamond plate cover for battery charger/air compressor. Includes louvers for ventilation.	$256
1685-0310	Main control console with zolatone grey finish. Locate in cab centered between driver and officer. Includes NFPA in-cab controls/switching.	$687
1685-0372	Map pocket rear cab console aluminum plate to match console finish.	$119
1750-0202	Kussmaul battery charger with air compressor and air inlet. The battery charger receptacle and air inlet to include auto-eject. Locate to driver side below the driver door.	$1,068
1750-0224	Engine Compartment Light LED for Freightliner Chassis (EA).	$274
1750-0225	Engine Compartment Light for Freightliner Chassis (EA).	$147
1750-0233	Customer supplied radio and antennas to be installed by Tri-Co Communicaitons.	$915
1750-0272	Kussmaul battery charger with air compressor and air inlet. The battery charger receptacle and air inlet to include auto-eject. Locate to driver side body above vacuum pump access.	$2,031
1750-0273	Kussmaul battery charger. The battery charger receptacle and air inlet to include auto-eject. Locate to driver side body above vacuum pump access. No compressor required with charger	$1,289
1750-0282	Auto-Eject receptacle inlet 20 amp located below the driver's door with a red cover. Receptical to be wired to heaters on tank inlet / out collars. WaterMaster only.	$647
1750-0416	30 AMP inline fuse as hot lead for radio installation. Radio circuit with in-line fuse 30 amp. Fuse wired to ignition side to power the radio head. To be labeled and identified as "HOT". In-line fuse to be clearly labeled. Wiring located in the interior of the center console also provide ground wire and label wires. Label ground "Chassis Ground".	$638
1750-0443	Dome Lts Red/White Whelen model 60CREGCS LED. Package includes two lights mounted in the front of the cab. White light wired through door and light assembly switch. Red light through light assembly switch.	$628
1750-0444	Battery charger Iota model DLS-45, 45 amp.	$668
3000	**Body**	
3080-0083	Single axle body with 2500 gallon tank. Includes driver side forward body access to vacuum pump, compartments L1/R1 with satin roll-up doors with header, driver and officer side compartment top storage areas (driver side includes double hose restraints) and rear body/bumper trim.	$2,826
3080-0084	Tandem axle body with 3000 gallon tank. Includes driver side forward body access to vacuum pump, compartments L1/R1 with satin roll-up doors with header, driver and officer side compartment top storage areas (driver side includes double hose restraints) and rear body/bumper trim.	$6,377
3080-0085	Tandem axle body with 3500 gallon tank. Includes driver side forward body access to vacuum pump, compartments L1/R1 with satin roll-up doors with header, driver and officer side compartment top storage areas (driver side includes double hose restraints) and rear body/bumper trim.	$9,193

3080-0086	Tandem axle body with 4000 gallon tank. Includes driver side forward body access to vacuum pump, compartments L1/R1 with satin roll-up doors with header, driver and officer side compartment top storage areas (driver side includes double hose restraints) and rear body/bumper trim.	$12,006
3080-0092	Single axle body with 2500 gallon tank (with auxiliary rear tank fill). Includes driver side forward body access to vacuum pump, compartments L1/R1 with satin roll-up doors with header, driver and officer side compartment top storage areas (driver side includes double hose restraints) and rear body/bumper trim.	$2,826
3080-0093	Tandem axle body with 3000 gallon tank (with auxiliary rear tank fill). Includes driver side forward body access to vacuum pump, compartments L1/R1 with satin roll-up doors with header, driver and officer side compartment top storage areas (driver side includes double hose restraints) and rear body/bumper trim.	$6,377
3080-0094	Tandem axle body with 3500 gallon tank (with auxiliary rear tank fill). Includes driver side forward body access to vacuum pump, compartments L1/R1 with satin roll-up doors with header, driver and officer side compartment top storage areas (driver side includes double hose restraints) and rear body/bumper trim.	$8,856
3080-0095	Tandem axle body with 4000 gallon tank (with auxiliary rear tank fill). Includes driver side forward body access to vacuum pump, compartments L1/R1 with satin roll-up doors with header, driver and officer side compartment top storage areas (driver side includes double hose restraints) and rear body/bumper trim.	$12,006
3080-0153	Tandem axle body with 2500 gallon tank (with auxiliary rear tank fill). Includes driver side forward body access to vacuum pump, compartments L1/R1 with satin roll-up doors with header, driver and officer side compartment top storage areas (driver side includes double hose restraints) and rear body/bumper trim.	$6,377
3080-0205	Reinforcement pads welded to the Water Master aluminum tank by Brenner Tank for mounting of ladder support and brackets.	$468
3080-0206	Weld the ladder bracket support to the pads on the driver side on the Water Master tank (by E_ONE).	$637
3080-0209	Single axle body with 2000 gallon tank (with auxiliary rear tank fill). Includes driver side forward body access to vacuum pump, compartments L1/R1 with satin roll-up doors with header, driver and officer side compartment top storage areas (driver side includes double hose restraints) and rear body/bumper trim.	$375
3080-0210	Single axle body with 2500 gallon tank (with auxiliary rear tank fill). Includes driver side forward body access to vacuum pump, compartments L1/R1 with satin roll-up doors with header, driver and officer side compartment top storage areas (driver side includes double hose restraints) and rear body/bumper trim.	$3,200
3080-0211	Tandem axle body with 3000 gallon tank (with auxiliary rear tank fill). Includes driver side forward body access to vacuum pump, compartments L1/R1 with satin roll-up doors with header, driver and officer side compartment top storage areas (driver side includes double hose restraints) and rear body/bumper trim.	$6,751
3080-0212	Tandem axle body with 3500 gallon tank (with auxiliary rear tank fill). Includes driver side forward body access to vacuum pump, compartments L1/R1 with satin roll-up doors with header, driver and officer side compartment top storage areas (driver side includes double hose restraints) and rear body/bumper trim.	$9,230
3080-0213	Tandem axle body with 4000 gallon tank (with auxiliary rear tank fill). Includes driver side forward body access to vacuum pump, compartments L1/R1 with satin roll-up doors with header, driver and officer side compartment top storage areas (driver side includes double hose restraints) and rear body/bumper trim.	$12,381
3080-0214	Anodes for water tank - (3) anodes located in bottom of water tank.	$564
3130-0263	Side mount pump module. Includes upper area for double stacked double preconnects with area for dead lay of hose. Side panels to be stainless steel and backside of module to have diamond plate trim. Includes red crosslay cover with mechanical hold downs and quick release side flaps.	$1,117
3130-0446	Side mount pump module. Includes upper area for double stacked double preconnects with area for dead lay of hose. Side panels to be stainless steel and backside of module to have diamond plate trim.	$1,116
3130-0585	Side mount pump module. Includes upper area for double stacked double preconnects with area for dead lay of hose. Side panels to be stainless steel and backside of module to have diamond plate trim.	$1,168
3136-0082	Two (2) pump compartment heaters are to be mounted in the pump area. Locate as low as possible.The lower area of the pump compartment to have a four (4) sided heat pan with removable bottoms. Extreme weather heat pan plates. Includes interior module area mounted plates for increasing the lower heat pan (forward and rearward) into the lower area of the module for increased heat retaining.	$4,337
3320-0026	(2) SCBA Storage. Located (1) each side and rearward of the rear axle.	$676
3320-0035	SCBA Bottle storage - behind the cab qty of (4)	$676
3320-0036	(4) SCBA Storage. Located (2) each side rearward of the rear axle in the body skirting.	$1,376
3320-0037	(4) SCBA Storage. Located (2) each side- (1) forward and (1) rearward of the rear axle in the body skirting.	$1,376
3320-0048	(4) SCBA Storage. Located (2) each side in wheel well - (1) forward and (1) rearward of the rear axle.	$1,445
3330-0117	Frame mounted stirrup style step with gator grip offset to forward area of pump module one each side. Requires relocating oil catch muffler.	$1,489
3330-0140	Driver side rear flop down step (24" wide). Includes driver side step area only gator grip overlay, (1) 18" handrail vertically mounted on rear inboard side of hard suction storage box and (1) 12" mounted horizontally on rear of driver side compartment top storage. Step to be stored in the up/pinned position when not in use.	$727
3340-0325	(PR) NFPA compliant wheel chocks. Locate (1) each side rearward of the rear axle.	$811
3340-0326	Storage compartment driver side compartment top. Locate to forward area. Includes roll-up door (wired to door ajar) with header and (1) interior strip light.	$2,240

3340-0377	Storage compartment driver side compartment top. Locate to forward area. Includes roll-up door (wired to door ajar) with header and (1) interior strip light. For use with 2000 Gallon Tank.	$2,240
3340-0378	Storage compartment driver side compartment top. Locate to forward area. Includes roll-up door (wired to door ajar) with header and (1) interior strip light. For use with 2500 Gallon Tank.	$2,240
3340-0379	Storage compartment driver side compartment top. Locate to forward area. Includes roll-up door (wired to door ajar) with header and (1) interior strip light. For use with 3000 Gallon Tank.	$2,240
3340-0380	Storage compartment driver side compartment top. Locate to forward area. Includes roll-up door (wired to door ajar) with header and (1) interior strip light. For use with 3500 Gallon Tank.	$2,240
3340-0381	Storage compartment driver side compartment top. Locate to forward area. Includes roll-up door (wired to door ajar) with header and (1) interior strip light. For use with 4000 Gallon Tank.	$2,240
3340-0402	Water Master wheel well to have E-One style trim. For use with tandem axle only.	$952
3340-0410	Water Master Body, Pump Module and Cab Tags in French to replace standard English E-One supplied Tags.	$1,769
3340-0466	Turtle Tile Brand Red Floor Matting covering all applicable Compartment Floors, Shelves, and Rollout Trays.	$778
3340-0468	Storage compartment driver side compartment top with extended length (58" opening with roll-up door open). Locate to forward area. Includes roll-up door (wired to door ajar) with header and (1) interior strip light. For use with 3500 Gallon Tank.	$2,488
3340-0469	Driver side upper body storage area to have black dri-deck installed and run full length and width as applicable. Area to be for storage of two (2) lays of 5" LDH hose (500' total). Includes bolt-in plate at rear to square off back of storage area and three (3) NFPA retaining straps (sized to wrap up from floor and over hoses with adjustablity for hose stacking). Hose to be deployable from the rear with rear body and bolt-in plate notched to provide rear opening. A red vinyl drop down flap shall be provided with quarter turn upper latching.	$985
3340-0515	Driver side upper body storage area to have black dri-deck installed and run full length and width as applicable. Area to be for storage of 400' 0f 2.5" DJ hose. Includes bolt-in plate at rear to square off back of storage area and three (3) NFPA retaining straps (sized to wrap up from floor and over hoses with adjustablity for hose stacking). Hose to be deployable from the side of the body.	$985
3340-0598	Driver side upper body storage area to have black dri-deck installed and run full length and width as applicable. Area to be for storage of 200' 0f 3" DJ hose. Includes welded plate at rear to square off back of storage area and three (3) NFPA retaining straps (sized to wrap up from floor and over hoses with adjustablity for hose stacking). Hose to be deployable from the rear of the body. A black vinyl drop down flap shall be provided with quarter turn upper latching.	$985
3340-0843	Storage compartment driver side compartment top with extended length (42" W x 34 tall opening with roll up door added). Locate to forward area. Includes roll-up door (wired to door ajar) with header and (1) interior strip light. For use with 3500 Gallon Tank.	$2,488
3340-0844	Storage compartment officer side compartment top with extended length (42" W x 34 tall opening with roll up door added). Locate to forward area. Includes roll-up door (wired to door ajar) with header and (1) interior strip light. For use with 3500 Gallon Tank.	$2,488
3340-0845	Driver and officer side upper body storage area to have a rearward deployment notch with vinyl cover with twist button latches to match color as selected for other areas of apparatus. A strap shall be provided each side rearward within reach form the rear of the apparatus to secure equipment. Area both sides to be for storage of (2) 6 in. x 10' diameter hard suction hoses. For use with dual folding tank body racks mounted to body sides which further captivate stored hard tubes.	$1,005
3365-0152	Diamond plate portable folding tank cover. For use with 2000 tank and Zico drop down rack.	$806
3365-0153	Diamond plate portable folding tank cover. For use with 2500 tank and Zico drop down rack.	$806
3365-0154	(2) Zico quic-mount brackets (1 brackets supports 2 poles) with rubber pull-over hold-downs. Locate in driver side compartment top storage outboard. Position for use with (2) 6' pike poles.	$220
3365-0157	Diamond plate portable folding tank cover. For use with 3000 tank and Zico drop down rack.	$806
3365-0158	Diamond plate portable folding tank cover. For use with 3500 tank and Zico drop down rack.	$806
3365-0159	Diamond plate portable folding tank cover. For use with 4000 tank and Zico drop down rack.	$806
3365-0160	Manually operated drop down rack on driver body. Secures portable folding tank with capacity of main tank on body.	$944
3365-0169	Triple hardsuction storage with NFPA compliant restraints. Locate driver side of tank with fixed mounted brackets. Trays to formed diamond plate (diamonds out) and sized to hold 6" x 15' hardsuction hose.	$1,674
3365-0201	Manually operated drop down rack on driver. To secure a 2500 portable folding tank IPO capacity of main tank on body. Includes rearward mounted tank stop (2500 gallon portable tank to stored offset forward in rack).	$1,315
3365-0204	Zico electric drop down ladder rack on officer body.	$5,756
3365-0205	Driver side hardsuction storage racks for (2) 18' hardsuction hoses. Each rack to be mounted to tank ribs and includes NFPA retaining straps.	$1,268
3365-0207	Diamond plate box for storage of (3) 10' hard suction hoses (hoses not included). Box to be mounted off driver side of tank (tank rib mounts) and is to include rear access door with push-button latch. Door to be wired to door ajar indicator.	$2,253
3365-0212	(2) pike pole tubes with retaining pins. Locate driver side mounted to tank ribs. Tubes are for use with up to (2) 10' poles.	$316
3365-0213	Manually operated drop down rack (PR) located (1) each side of body. Each capable of securing a 4000 gallon portable folding tank.Includes diamond plate cover along ends, top and outward side with (2) 20" handrails mounted along the forward and rearward ends and (2) 12" handrails mounted along the top towards the ends of the cover.	$2,854
3365-0224	Double hardsuction storage with NFPA compliant restraints. Locate driver side of tank with fixed mounted brackets. Trays to formed diamond plate (diamonds out) and sized to hold (1) 6" x 16' and (1) 6" x 18' hardsuction hose.	$1,117
3365-0235	Diamond plate box for storage of (4) 16' hard suction hoses (hoses not included). Box to be mounted off driver side of tank (tank rib mounts) and is to include rear access door with push-button latch. Door to be wired to door ajar indicator. Position box to allow loading of lower body storage tray with hose from rear.	$2,413

3365-0287	Smooth plate portable folding tank cover, painted job color. For use with 3000 tank and Zico drop down rack.	$979
3365-0327	Ladder brackets. Locate on welded brackets on the driver side of the Water master tank.	$616
3365-0341	Ladder brackets. Locate on welded brackets on the driver side of the Water Master tank. Brackets shall be mounted so the bottom edge of stored ladder(s) are approximately 18" above the hose bed storage floor.	$616
3365-0369	Zico hydraulic drop down rack on officer body. Secures portable folding tank with capacity of main tank on body.	$6,944
3365-0370	Zico hydraulic drop down rack on driver body. Secures portable folding tank with capacity of main tank on body.	$7,082
3365-0432	Zico hydraulic drop down rack on driver body. Secures portable folding tank with capacity of main tank on body.	$7,082
3365-0433	Zico hydraulic drop down rack on officer body. Secures portable folding tank with capacity of main tank on body.	$6,944
3365-0494	Zico electric drop down hardsuction rack. Rack located to driver of body. The control switching to be located on the side pump panel with the rack being in full view of the operator during operations. The rack includes (2) main rack mounted 12' trays.	$7,223
3370-0113	Tracks for adjustable shelf and/or tray. Location: Driver side forward body compartment.	$111
3370-0114	Tracks for adjustable shelf and/or tray. Location: Officer side forward body compartment.	$111
3380-0124	Floor mounted roll-out tray with 500lbs capacity. Mount on L1 and R1 floor.	$766
3380-0135	Roll-out tray. Mount on driver side forward body compartment floor.	$766
3380-0136	Roll-out tray. Mount on officer side forward body compartment floor.	$766
3380-0137	Adjustable roll-out tray. Mount in driver side forward body compartment.	$1,100
3380-0138	Adjustable roll-out tray. Mount in officer side forward body compartment.	$1,100
4000	**Pump**	
4005-0065	PM100 Vacuum Pump (for use with AP or MBP pumps only). Includes primary and secondary shut offs, (4) water level gauges- (3) body and (1) cab and the (3) inlets/outlets with switching.	$3,192
4005-0084	PM100 Vacuum Pump (for use with DSD pump only). Includes primary and secondary shut offs, (4) water level gauges- (3) body and (1) cab and the (3) inlets/outlets with switching.	$3,192
4005-0088	Hydraulically driven PM 100 vacuum pump and APH50 water pump. Hydraulic motor driven by PTO on driver side of EVS 4000 series transmission. 40 gallon hydraulic reservoir. Vacuum pump system includes primary and secondary shut-offs, 4 water level gauges ? 3 body and 1 cab and the (3) inlets/outlets with switching.	$3,192
4005-0097	PM100 Vacuum Pump (for use with DSD pump only). Includes primary and secondary shut offs, (4) water level gauges- (3) body and (1) cab and the (2) inlets/outlets officer's, driver side and (1) 10" rear dump only with switching.	$8,069
4005-0153	PM100 Vacuum Pump (for use with APH or MBP pumps only). Includes primary and secondary shut offs, (4) water level gauges- (3) body and (1) cab and the (3) inlets/outlets with switching.	$3,191
4005-0161	PM80 Vacuum Pump. Includes primary and secondary shut offs, (4) water level gauges- (3) body and (1) cab and the (3) inlets/outlets with switching.	$821
4005-0162	PM100 Vacuum Pump (for use with AP or MBP pumps only). Includes primary and secondary shut offs, (4) water level gauges- (3) body and (1) cab and the (3) inlets/outlets with switching.	$4,010
4005-0163	PM100 Vacuum Pump (for use with DSD pump only). Includes primary and secondary shut offs, (4) water level gauges- (3) body and (1) cab and the (3) inlets/outlets with switching.	$4,010
4015-0096	Engine cooler. For use with International 7600 chassis.	$3,008
4015-0097	Heated intake strips (4). Located (1) on each 6" tank intake and (1) 2.5" rear tank fill.	$1,939
4015-0099	Zinc Anodes for Hale Pump and tank - (Pair) (1) pump and (1) tank.	$735
4015-0143	Pump&Roll kit WM. To include Digitial Master pressure gauge, Switches, and Preset discharge pressure relief valve controls in cab. Locate in cab center console.	$2,897
4015-0151	Indicator Light for valve position on the vacumn pump.	$1,774
4015-0161	Addition Heated intake strips (1). Located (1) on addition 2.5" direct tank fill.	$486
4015-0168	Engine cooler. For use with International 4400, 7400 and 7500 chassis.	$518
4015-0169	Engine cooler. For use with International 7600 chassis.	$416
4020-0037	Three (3) anodes located in main body water tank.	$937
4100-0057	20 gallon external foam tank for [#LOC] locate: Officer side front of body. UPF Poly III [#COL] fill tower. A diamond plate cover will be provided around the foam tank.	$3,408
4405-0057	Booster Reel. Reel to have capacity of 200' of 1" (not included). Includes aluminum plate enclosure on lower frame mount and the upper diamond plate panel forward of R1 will be reduced in size for the reel to fit under that area, easily accessible rewind switch, rollers and air blow-out. Locate officer side lower forward body/pump area.	$3,757
4405-0072	Booster Reel. Reel to have capacity of 200' of 1" (Reeltex hose). Includes aluminum plate enclosure on lower frame mount and the upper diamond plate panel forward of R1 will be reduced in size for the reel to fit under that area, easily accessible rewind switch, rollers, 200' of 1" reeltex hose and air blow-out. Locate officer side lower forward body/pump area.	$5,608
4405-0079	Booster Reel. Reel to have capacity of 200' of 1" (Reeltex hose). Includes aluminum plate enclosure on lower frame mount and the upper diamond plate panel forward of R1 will be reduced in size for the reel to fit under that area, easily accessible rewind switch, rollers, 200' of 1" reeltex hose (4-50' sections) and air blow-out. Locate officer side lower forward body/pump area.	$5,608
4410-0014	Plumbing kit with Hale AP50 (without officer side steamer) pump (500GPM). Includes (1) 2.5" Driver Side Discharge with droop and cap, (1) 2.5" Officer Side Discharge with droop and cap and (2) 1.5" Crosslay Discharges.	$26,112
4410-0015	Plumbing Kit with Hale DSD pump (1250GPM). Includes (1) 2.5" Driver Side Discharge with droop and cap, (2) 2.5" Officer Side Discharges with droops and caps and (2) 1.5" Crosslay Discharges.	$24,305
4410-0016	Plumbing kit with Hale AP50 (with officer side steamer) pump (500GPM). Includes (1) 2.5" Driver Side Discharge with droop and cap, (1) 2.5" Officer Side Discharge with droop and cap and (2) 1.5" Crosslay Discharges. The discharges are to be labeled and color coded in compliance with current NFPA.	$27,970

4410-0018	Plumbing Kit with Hale MBP500 pump (500GPM). Includes (1) 2.5" Driver Side Discharge with droop and cap, (1) 2.5" Officer Side Discharge with droop and cap and (2) 1.5" Crosslay Discharges.	$32,830
4410-0019	Plumbing Kit with Hale MBP500 NFPA pump (500GPM). Includes (1) 2.5" Driver Side Discharge with droop and cap, (1) 2.5" Officer Side Discharge with droop and cap and (2) 2.5" Crosslay Discharges. The discharges are to be labeled and color coded in compliance with current NFPA.	$34,689
4410-0020	Plumbing Kit with Hale MBP1000 pump (1000GPM). Includes (1) 2.5" Driver Side Discharge with droop and cap, (1) 2.5" Officer Side Discharge with droop and cap and (2) 1.5" Crosslay Discharges.	$32,830
4410-0021	Plumbing Kit with Hale MBP1000 NFPA pump (1000GPM). Includes (1) 2.5" Driver Side Discharge with droop and cap, (1) 2.5" Officer Side Discharge with droop and cap and (2) 2.5" Crosslay Discharges. The discharges are to be labeled and color coded in compliance with current NFPA.	$34,689
4410-0022	Plumbing kit with Hale APH50 (with officer side steamer) hydraulic driven pump. Includes (1) 2.5" Driver Side Discharge with droop and cap, (1) 2.5" Officer Side Discharge with droop and cap and (2) 1.5" Crosslay Discharges. The discharges are to be labeled and color coded in compliance with current NFPA.	$6,055
4410-0023	Plumbing kit with Hale AP (with officer side steamer) pump rated for 2000 LPM. Includes (1) 2.5" Driver Side Discharge with droop and cap, (1) 2.5" Officer Side Discharge with droop and cap and (2) 1.5" Crosslay Discharges. The discharges are to be labeled and color coded in compliance with current ULC.	$27,970
4410-0024	Plumbing Kit with Hale MBP pump with rating of 2000 LPM. Includes (1) 2.5" Driver Side Discharge with droop and cap, (1) 2.5" Officer Side Discharge with droop and cap and (2) 2.5" Crosslay Discharges. The discharges are to be labeled and color coded in compliance with current ULC.	$34,689
4410-0025	Plumbing Kit with Hale MBP pump rated at 3000 LPM. Includes (1) 2.5" Driver Side Discharge with droop and cap, (1) 2.5" Officer Side Discharge with droop and cap and (2) 1.5" Crosslay Discharges. The discharges are to be labeled and color coded in compliance with current ULC.	$34,689
4410-0026	Plumbing Kit for use with a Hale DSD (5000LPM) ULC pump. Includes (1) FRC In-Control display, (1) 2.5" Driver Side Discharge with droop and cap, (2) 2.5" Officer Side Discharges with droops and caps and (2) 2.5" Crosslay Discharges. The discharges are to be labeled and color coded in compliance with current NFPA.	$41,409
4410-0034	Plumbing Kit for use with a Hale DSD NFPA pump (750GPM). Includes (1) FRC In-Control display, (1) 2.5" Driver Side Discharge with droop and cap, (2) 2.5" Officer Side Discharges with droops and caps and (2) 2.5" Crosslay Discharges. The discharges are to be labeled and color coded in compliance with current NFPA.	$41,409
4410-0035	Plumbing kit with Hale AP50 (with officer side steamer) pump (500GPM). Includes (1) 2.5" Driver Side Discharge with cap (NO DROOP), (1) 2.5" Officer Side Discharge with cap (NO DROOP) and (1) 1.5" Crosslay Discharge (forward) and (1) 2.5" discharge (rearward) and a Hale TRVL-120 thremal relief valve. Pre-connect storage to be extra capacity (24" deep) with (1) lay of 1.75" DJ at 200' and (2) lays of 2.5" DJ at 200'. Pump intake to have 5" FNPT by 5" NST and a 6" Stortz adaptor with cap by 5" FNST threads (ship loose). The discharges are to be labeled and color coded in compliance with current NFPA. All discharges to have quater turn bleeder valves.	$32,934
4410-0037	Plumbing Kit for use with a Hale DSD NFPA pump (1250GPM). Includes (1) FRC In-Control display, (1) 2.5" Driver Side Discharge with droop and cap, (1) 2.5" Officer Side Discharges with droop and cap, and (1) 4" Officer discharge with 3" valve and 4" Storz droops adapter and caps and (2) 2.5" Crosslay Discharges. The discharges are to be labeled and color coded in compliance with current NFPA.	$45,992
4410-0039	Plumbing kit with C.E.T. Pump. Includes (2) 1.5" Crosslay Discharges.	$15,769
4410-0040	Plumbing Kit for use with a Hale DSD (5000LPM) ULC pump. Includes (1) FRC In-Control display, (1) 2.5" Driver Side Discharge with droop and cap, (1) 2.5" Officer Side Discharges with droop and cap, and (1) 4" Officer discharge with 3" valve and 4" Storz droops adapter and caps and (2) 2.5" Crosslay Discharges. The discharges are to be labeled and color coded in compliance with current NFPA.	$45,992
4410-0044	Plumbing Kit for use with a Hale DSD NFPA pump (1250GPM). Includes (1) FRC In-Control display, (2) 2.5" Driver Side Discharge with droop and cap, (1) 3" Officer Side Discharge with droop and cap and (2) 2.5" Crosslay Discharges. The discharges are to be labeled and color coded in compliance with current NFPA.	$46,298
4410-0046	Plumbing Kit for use with a Hale DSD NFPA pump (1250GPM). Includes (1) FRC In-Control display, (1) 2.5" Driver Side Discharge with droop and cap , (1) 2.5" Officer Side Discharge with droop and cap, (1) 3" Officer Side Discharge with droop and cap and (2) 2.5" Crosslay Discharges. The discharges are to be labeled and color coded in compliance with current NFPA.	$46,298
4410-0047	Plumbing kit with Hale APH (with officer side steamer)hydraulic driven pump. Pump rated for 2000 LPM. Includes (1) 2.5" Driver Side Discharge with droop and cap, (1) 2.5" Officer Side Discharge with droop and cap and (2) 1.5" Crosslay Discharges. The discharges are to be labeled and color coded in compliance with current ULC.	$35,373
4410-0050	Plumbing kit with Hale AP50 pump (500GPM). Includes (1) 2.5" Driver Side Discharge with droop and cap, (1) 2.5" Officer Side Discharge with droop and cap and (2) 1.5" Crosslay Discharges.	$26,486
4410-0051	Plumbing Kit with Hale MBP500 pump (500GPM). Includes (1) 2.5" Driver Side Discharge with droop and cap, (1) 2.5" Officer Side Discharge with droop and cap and (2) 1.5" Crosslay Discharges.	$33,205
4410-0052	Plumbing Kit with Hale MBP1000 pump (1000GPM). Includes (1) 2.5" Driver Side Discharge with droop and cap, (1) 2.5" Officer Side Discharge with droop and cap and (2) 1.5" Crosslay Discharges.	$33,205
4410-0053	Plumbing kit with Hale AP50 (with officer side steamer) pump (500GPM). Includes (1) 2.5" Driver Side Discharge with droop and cap, (1) 2.5" Officer Side Discharge with droop and cap and (2) 1.5" Crosslay Discharges. The discharges are to be labeled and color coded in compliance with current NFPA.	$28,344
4410-0054	Plumbing Kit with Hale MBP500 NFPA pump (500GPM). Includes (1) 2.5" Driver Side Discharge with droop and cap, (1) 2.5" Officer Side Discharge with droop and cap and (2) 2.5" Crosslay Discharges. The discharges are to be labeled and color coded in compliance with current NFPA.	$35,063

4410-0055	Plumbing Kit with Hale MBP1000 NFPA pump (1000GPM). Includes (1) 2.5" Driver Side Discharge with droop and cap, (1) 2.5" Officer Side Discharge with droop and cap and (2) 2.5" Crosslay Discharges. The discharges are to be labeled and color coded in compliance with current NFPA.	$35,063
4410-0056	Plumbing Kit for use with a Hale DSD NFPA pump (1250GPM). Includes (1) FRC In-Control display, (1) 2.5" Driver Side Discharge with droop and cap, (2) 2.5" Officer Side Discharges with droops and caps and (2) 2.5" Crosslay Discharges. The discharges are to be labeled and color coded in compliance with current NFPA.	$41,783
4410-0057	Plumbing Kit with Hale AP pump rated at 2000 LPM. Includes (1) 2.5" Driver Side Discharge with droop and cap, (1) 2.5" Officer Side Discharge with droop and cap and (2) 1.5" Crosslay Discharges. The discharges are to be labeled and color coded in compliance with current ULC.	$28,344
4410-0058	Plumbing Kit with Hale MBP pump rated at 3000 LPM. Includes (1) 2.5" Driver Side Discharge with droop and cap, (1) 2.5" Officer Side Discharge with droop and cap and (2) 1.5" Crosslay Discharges. The discharges are to be labeled and color coded in compliance with current ULC.	$35,063
4410-0059	Plumbing Kit for use with a Hale DSD NFPA pump (1250GPM). Includes (1)CLASS 1 TPG Plus display, (1) 2.5" Driver Side Discharge with droop and cap, (2) 2.5" Officer Side Discharges with droops and caps and (2) 2.5" Crosslay Discharges. The discharges are to be labeled and color coded in compliance with current NFPA.	$41,409
4410-0060	Plumbing Kit with Hale MBP1000 NFPA pump (750GPM). Includes (1) 2.5" Driver Side Discharge with droop and cap, (1) 2.5" Officer Side Discharge with droop and cap and (2) 2.5" Crosslay Discharges. The discharges are to be labeled and color coded in compliance with current NFPA.	$35,063
4410-0063	Plumbing kit with Hale APH (with officer side steamer)hydraulic driven pump. Pump rated for 500 GPM. Includes (1) 2.5" Driver Side Discharge with droop and cap, (1) 2.5" Officer Side Discharge with droop and cap and (2) 1.5" Crosslay Discharges. The discharges are to be labeled and color coded in compliance with current NFPA.	$35,373
4415-0664	Front bumper 1.5" pre-connect with manual valve. Locate pre-connect in front bumper tray down low on rear wall. Includes air-blow out and bleeder valve.	$4,959
4415-0717	1.5" front bumper discharge line. Includes air actuated Akron valve with switching located in cab on console. Discharge line to terminate just below driver side of bumper with male NPT threads (line is for use with dealer installed bumper turret. Dealer responsible for plumbing application and any additional length of line or connectors). Secure line as required and cap. Includes cab mounted pressure gauge and side panel bleeder and blow-out.	$2,076
4415-0893	Front bumper 1.5" pre-connect with manual valve and pressure gauge. Locate pre-connect in front bumper tray down low on rear wall.	$2,325
4415-0894	2.5" officer forward hosebed/body tray pre-connect. Includes connection to 2.5" valve assembly, pressure gauge and bleeder. Pre-connect to be positioned rearward of the forward Zico rack mount of the officer side hosebed/body tray. Hosebed/Body tray to include black dri-dek flooring for NFPA and a red vinyl hosebed cover (secure along the sides with awning strips and twist locks along the inboard side. The area inboard of the forward and rearward Zico rack mounts to have a bolt-in wall to square off the hose storage area.	$3,582
4417-0093	Akron FireFox remote control monitor. Located above pump area with joystick controller at cab console. For use with AP or MBP pumps.	$10,902
4417-0094	Akron FireFox remote control monitor. Located above pump area with joystick controller at cab console. For use with DSD pump.	$10,046
4417-0095	Monitor and Reel kit. Includes (1) Akron FireFox remote control monitor. Located above pump area with joystick controller at cab console and (1) Booster Reel with a capacity for 200' of 1" (not included). Includes aluminum plate enclosure with easily accessible rewind switch, rollers and air blow-out. Locate officer side lower pump area. For use with AP or MBP pumps.	$13,717
4417-0096	Monitor and Reel kit. Includes (1) Akron FireFox remote control monitor. Located above pump area with joystick controller at cab console and (1) Booster Reel with a capacity for 200' of 1" (not included). Includes aluminum plate enclosure with easily accessible rewind switch, rollers and air blow-out. Locate officer side lower pump area. For use with DSD pump.	$13,717
4432-0144	Foam ready Manifold for a Hale Foam Logix or a Foam Pro system- plumbed to Crosslay #1, Driver side 2.5" discharge, Hose reel, and (1) 2.5" outlet for dealer install bumper monitor. W/3" plumbing	$2,479
4435-0145	Additional discharge gauge(s). Includes english dominant reading.	$160
4435-0146	Additional discharge gauge(s). Includes metric dominant reading.	$163
4435-0238	Addition Vacuum gauge located on driver side pump panel.	$558
4445-0047	Bleeder/Drain .75 Valve Plumbed to each 6" inlet/outlet.	$202
4450-0154	Manual Valve Overrides for the (3) 6" valves tank inlet/outlet valves in the event of an air pressure failure.	$1,229
4450-0155	2.5" Tank Fill Akron Electric/air control Valve.	$1,927
4450-0159	Inlet/Outlet 6" Heated Collar. The heat collar will be install between the valve, and tank flange. They are connected to the coolant system on the truck to circulate anti-freeze. Also a 110 volt heater and thermostat for freeze control when the truck is parker. The 110 volt heater shall be connected to shoreline.	$2,010
4450-0209	2" tank fill Akron manual valve.	$1,604
4450-0221	3" Left Rear Direct Tank Fill. Includes swing handle control, swivel, and plug with retainer. The direct tank fill piping shall be connected to the top of the tank and routed down to the valve located at the rear of unit down low.	$2,178
4450-0222	3" Right Rear Direct Tank Fill. Includes swing handle control, swivel, and plug with retainer. The direct tank fill piping shall be connected to the top of the tank and routed down to the valve located at the rear of unit down low.	$2,178
4465-0027	FRC In-Control pressure governor TGA400. Includes engine, transmission, and master pump gauges.	$220
5000	**Electrical**	
5010-0059	VFD Text display for V-MUX electrical system. Location: [#LOC].	$905

5010-0074	Special programming for multiplex color display (per hour). Requires engineering review and approval to determine feasibility and time.	$61
5010-0075	Vista display to have a customized sticker for legend buttons (Reference info in file for new configuration). May require special programming fee.	$605
5010-0076	Vista display to have a non-standard sticker for legend buttons (Reference info in file for existing but non-standard configuration). May require special programming fee.	$115
5100-0053	All cab console switches (as applicable) and the (4) body mount intake switches to be LED smart switches (IPOS).	$1,736
5100-0122	Switch circuit three way. Includes (1) additional switch. An additional switch required for more than two locations. Location: driver, officer and rear of body adjacent to dump valves for activation.	$190
5100-0123	Switch, additional 12 volt/15 amp. Location and function: center console for driver side scene lights, officer side scene lights and rear scene lights.	$228
5100-0124	Switch, additional 12 volt/15 amp. Location and function: center console as a spare.	$228
5110-0062	(4) rocker switches with back lighing to be provided IPO the standard toggle switches on body for the (3) main vacuum pump intake/discharge.	$497
5110-0081	NFPA cab siren and speaker (WHLN) package. Includes (1) siren with (2) speakers located - (1) to driver side and (1) to officer side of front bumper (includes mounting bracket).	$278
5110-0095	(3) rocker switches with back lighting to be provided in cab on center console. Lable switch "Driver Spray Nozzle", "Officer Spray Nozzle" and "Remote Nozzle Light". Switching only being provided. Dealership to make all final connections to switches from dealer installed ground nozzle application.	$373
5150-0138	DOT STT/BU lighting. Includes red LED stop/tail/turn and clear LED back-up lights. Lights mounted horizontally on the rear of the body	$451
5300-0308	Whelen Mini-Freedom LED side facing front cab light bars (PR) model FNMINI 24" with MKEZ7 mounts. Red and blue LEDs with clear lenses. For use on rear mount platforms with supplemental upper level Zone A warning lights. Locate one each side front cab corners side facing.	$4,937
5300-0401	Light bar Whelen Freedom 72" LED with MKEZ7 mounts and clear lenses. Includes (6) Rota-Beam LED (4-red, 2-white), (2) green LED, (2) red LED, (2) dual LR11 alley lights, (2) LR11 take down lights and GTT 795H Opticom. N/A INTL Chassis. Location: Centered on the front cab roof.	$8,097
5300-0421	Light bar Whelen Freedom 72" LED with MKEZ7 mounts and clear lenses. Includes (8) red Rota-Beam LED and GTT 795H Opticom. N/A INTL Chassis. Location: Centered on the front cab roof.	$7,628
5300-0424	Light bar Whelen Freedom 72" LED with MKEZ7 mounts and red/clear lenses. Includes (8) red Rota-Beam LED and GTT 795H Opticom. N/A INTL Chassis. Location: Centered on the front cab roof.	$7,628
5300-0435	Light bar Federal Signal LPX61DS-NFPA 61" LED with red and clear lenses. Location: Centered on the front cab roof	$2,332
5300-0447	Light bar Federal Signal LPX 53" LED with red/clear/blue lenses, red diodes outer driver, clear diodes center and blue diodes outer officer. Location: Centered on the front cab roof	$2,181
5310-0032	Federal Signal Signal Master Light bar. Surface mounted at rear of tank. Includes (8) LED lights with controller located in cab.	$887
5310-0033	Whelen traffic advisor light bar. Surface mounted at rear of tank. Includes (8) LED lights with controller located in cab.	$1,113
5350-0128	Camera (3) backup Safety Vision LCD with split screen capable monitor. WaterMaster	$5,711
5350-0129	Camera system. Includes dual in-cab mounted monitors and officer side and rear body mounted cameras.	$1,523
5350-0281	Camera system. Includes in-cab mounted monitor, driver side, officer side and rear body mounted cameras.	$1,385
5380-0164	LED (Whelen) underbody ground lighting additional (PR). (1) each side below the mid-body. Water Master only.	$433
5380-0267	Compartment light package ROM V4 LED for Water Master. Includes two lights per compartment.	$1,499
5390-0061	Rear upper tank deck/scene lights wired through chassis reverse.	$90
5390-0062	Sides and rear upper tank deck/scene lights wired through chassis reverse.	$90
5390-0063	(8) LED scene lighting package. Locate (3) each side of tank and (2) at rear of body/tank. All (8) lights to be wired to operate with chassis transmisson in reverse.	$527
5390-0086	Whelen Pioneer LED scene light package/ Trucklite work light. Includes (2) model PFA2, (2) model PFA1 lights with bail mounts and (1) work light. Rear and front lights wired through work light switch in switch panel; side facing lights switched seperately. Location(s): (1) PFA2 each side center of tank, (1) PFA1 each side rear facing and (1) work light forward facing on upper tank.	$4,969
5390-0093	All tank mounted Deck/Scene lighting to be wired through chassis reverse.	$266
5390-0122	Whelen 900 series model 90C0ENZR Super LED Opti-Scene light (PR) with cast products mounting box. Switch in cab (driver and officer side lights switched separately). Locate [#LOC].	$2,121
5390-0123	Federal Signal model QL97LEDSCENE LED scene light (PR) with weatherproof connectors. Includes switch accessible to driver (driver and officer side lights switched separately). Locate [#LOC].	$1,137
5390-0149	Whelen 900 series model 90C0ENZR Super LED Opti-Scene light (EA) with diamond plate mounting box. Switch in cab (driver and officer side lights switched separately). Locate [#LOC].	$1,061
5390-0150	Whelen 900 series model 90C0ENZR Super LED Opti-Scene light (EA) with cast products mounting box. Switch in cab (driver and officer side light(s) switched separately). Locate [#LOC].	$1,061
5390-0156	Federal Signal model QL97LEDSCENE LED scene light (EA) with weatherproof connectors. Includes switch accessible to driver (driver and officer side lights switched separately). Locate [#LOC].	$569
5390-0164	Whelen 900 series model 9SC0ENZR Super LED Opti-Scene light (PR) with weatherproof connectors. Switch in cab (driver and officer side lights switched separately). Locate [#LOC].	$1,919
5390-0165	Whelen 900 series model 9SC0ENZR Super LED Opti-Scene light (PR) with diamond plate mounting box. Switch in cab (driver and officer side lights switched separately). Locate [#LOC].	$2,121
5390-0187	Whelen 900 series model 9SC0ENZR Super LED Opti-Scene light (1 EA) with weatherproof connector. Switch in cab (driver and officer side lights switched separately). Locate [#LOC].	$960
5400-0095	(2) additional scene lighting package. Locate lights - (1) each side of tank centered. Wired with standard work light switching.	$537

5400-0103	Fog Lights-Qtz Halogen (PR) Amber and located front of bumper.	$321
5400-0120	(9) LED scene lighting package. Locate lights - (3) each side of tank, (2) at rear of tank/body and (1) at front of tank/body.	$517
5400-0176	(7) LED scene lighting package. Locate lights - (1) forward area of tank, (2) each side of tank and (2) at rear of tank/body.	$931
5400-0195	(9) Whelen Micro Pioneer model MPBB LED scene lighting package. Locate lights - (1) forward area of tank, (3) each side of tank and (2) at rear of tank/body.	$4,921
5500-0074	Whelen model 295HFS2 siren with flush mount siren head, remote amplifier and microphone. N/A in California.	$1,237
5550-0235	Code 3 NFPA warning light package. Includes X58A red/blue lightbar, (8) 65 LED lights (4 red, 4 blue), (2) LXEX1F LED lights (1 red, 1 blue) and (2) 550 rotators (1 red, 1 blue)	$519
5550-0295	Whelen M6 Super LED lower level warning light package. Includes (6) red M6RC LED light heads, (2) red 6RBRC Rota-Beam LED and (2) red M2RC LED light heads with clear lenses. Locate side facing lights: [#LOC].	$4,361
5600-0239	Whelen Ultra Freedom Micro Edge LED (PR) Model MCFLED25 clear lense with red LEDs. Location: (1) each side at rear of tank.	$1,772
5600-0395	Warning light Whelen M-Series Super LED model M9K (PR) red/amber. Surface mounted with weatherproof connector. Location: (1) on each side up high rear of body.	$1,596
7000	**Loose Equipment**	$0
7700-0075	Hard Suction Hose 6" X 16' with Pyrolite Couplings	$2,085
7700-0090	Adaptor, hose and strainer package. For use with vacuum pump system. For use with 3000 to 4000 gallon tanks.	$2,902
7700-0091	Floating strainer. For use with vacuum pump system.	$813
7700-0093	Adaptor, hose and strainer package. For use with vacuum pump system. For use with 2000 gallon tank.	$2,902
7700-0094	Adaptor, hose and strainer package. For use with vacuum pump system. For use with 2000 thru 4000 gallon tank.	$2,902
7700-0095	Adaptor, hose and strainer package. For use with vacuum pump system. For use with 2500 gallon tank.	$4,172
7700-0097	Soft Suction Hose 20ft 5" with 4.5" long handle female coupler on one end and a 4.5" long handle male coupler on the other end.	$1,817
7700-0100	Adaptor, hose and strainer package. For use with vacuum pump system. For use with 2000 thru 4000 gallon tanks only.	$2,902
7700-0101	Aluminum 6" storz x 5" NH female thread swivel adaptor. For use with AP50 Pump Inlet.	$333
7700-0102	Aluminum 6" storz x 6" NH female thread swivel adaptor. For use with MBP/DSD Pump Inlet.	$333
7900-0135	Vest, traffic safety orange nylon mesh.	$17
7900-0137	2000 Gallon portable folding tank. Ship with unit stored in storage tank rack.	$781
7900-0138	2500 Gallon portable folding tank. Ship with unit stored in storage tank rack.	$950
7900-0139	3000 Gallon portable folding tank. Ship with unit stored in storage tank rack.	$1,079
7900-0140	3500 Gallon portable folding tank. Ship with unit stored in storage tank rack.	$1,137
7900-0141	4000 Gallon portable folding tank. Ship with unit stored in storage tank rack.	$1,221
7900-0155	Junkin model JSA-300PCW stokes basket. Ship loose.	$895
7900-0170	Zico helmet holder model UHH-1 (EA). Ship loose.	$71
7900-0177	3500 Gallon Aluminum frame portable folding tank. Ship with unit stored in storage tank rack.	$1,137
7900-0230	2500 Gallon Husky brand portable folding tank. Ship with unit stored in storage tank rack.	$1,413
7900-0254	6" Storz special intake cap. WaterMaster only.	$169
7900-0256	3000 Gallon Aluminum frame portable folding tank. Ship with unit stored in storage tank rack.	$1,397
7900-0257	Soft Suction Hose 15ft 6" with 6" long handle female swivel coupler on one end and a 4.5" long handle female swivel coupler on the other end.	$1,466
7900-0267	3500 Gallon portable folding tank. Ship with unit stored in storage tank rack. Color to be: Blue	$1,137
8000	**Painting, Striping, Lettering**	
8100-0195	International paint Break 24AGM. Required with all two-tone painted International cabs.	$858
8100-0200	International paint Break 23FGA. Required with all two-tone painted International cabs.	$767
8200-0043	3" Scotchlite Letters (60). Includes shade and outline per letter.	$1,195
8300-0107	4" White/Red Scotchlite stripe. Locate white on cab with bottom of stripe even with bottom of cab. The red is to be straight on the body side storage trays.	$960
8300-0108	4" Red Scotchlite stripe. Locate red on cab with bottom of stripe even with bottom of cab and straight on the body side storage trays.	$960
8300-0158	4" Black Scotchlite stripe. Locate on cab with bottom of stripe even with bottom of cab. The stripe is to be straight on the body side storage trays.	$960
8300-0196	Scotchlite Stripe - 4" wide reflective stripe on the front of the forward bumper shall be applied. Center on front bumper and extend side to side to best conform to bumper contour. Color: White (reflective).	$130
8300-0213	Scotchlite Stripe - 6" wide reflective stripe on the front of the forward bumper shall be applied. Center on front bumper and extend side to side to best conform to bumper contour. Color: White (reflective).	$130
8400-0023	Install customer supplied logo. Location: [#LOC].	$80
8400-0041	Vision flag on rear commercial cab window.	$424

Notes:

1) Availability of options are limited by other options selected, and not all options are available in every chassis/apparatus configuration. Selection of an option may require several of the above parts/items to complete the option package.

2) Certain options, alone or in combination with other options, may require heavier axle/suspension packages, longer frames, or reinforced frames at additional cost per the above price list.

3) To configure options, the E-One State Term Schedule authorized dealer will use quote configuration software to select the components necessary to effect the option, feature, or configuration requested and quote the total option price.

Fire Apparatus Quotation for:
STATE OF OHIO TERM SCHEDULE

Quotation Number: 57498 Rev: 6

Unit Description: WTSA-COMM

Quote Description: Tanker, Wetside, Single Axle, Aluminum

Salescode	Extended Description	Qty
TESTING COMPLIANCE STANDARD		
1001-0024	The E-ONE supplied components of the vehicle shall meet the requirements of NFPA 1901, 2009 edition (ULC as applicable) as a Tanker.	1
CHASSIS PREP		
1020-0010	Comm Chassis Prep E-1 Supp-FL.	1
TIRE OPTIONS		
1060-0117	RWC AirGuard LED tire pressure monitoring valve stem caps (6) for single rear axle applications.	1
AIR SYSTEM OPTIONS		
1110-0010-277	Air inlet. To charge brake system. Commercial chassis only. Location: driver's door step area.	1
1110-0076	Dual Stuttertone hood mounted air horns with driver and officer foot switches to be supplied and installed by Freightliner.	1
ENGINES & TRANSMISSIONS		
1200-0137	Electronic speed limiting set to 60 MPH.	1
1200-0257	Freightliner Cummins ISL 350 HP 2013 EPA engine.	1
CHASSIS OPTIONS		
1680-0011	Tow eyes rear below body, painted.	1
1680-0078	Tow hooks front OEM. Not available with extended E-ONE installed front bumper. Tow hooks are OEM supplied with chassis.	1
1680-0104	OEM chassis step package for Freightliner M2 series. Includes mounting plate for the battery charger receptacle and air inlet.	1
CAB MODEL		
1520-0085	Freightlner M2 106 two door cab.	1
MISC EXTERIOR CAB OPTIONS		
1675-0007	Diesel fuel only label.	1

SEATS		
1685-0012	Seating capacity tag of two occupants.	1
CAB ELECTRICAL OPTIONS		
1750-0059-277-04	Receptacle inlet 20 amp with a Yellow cover. Location: driver's door step area.	1
1750-0343	Battery charger E-ONE LPC 20. 120 volt inlet, 20 amp output.	1
BODY MODEL		
3080-0191	Extruded alum body for Wetside water tank, single axle chassis with driver side under tank pump. Includes driver and officer side forward lower body compartments, dia plt wheel well area and flat back style rearend with 12" tailboard.	1
BODY SPEC		
3090-0031-T06	The cab to body gap is approx 3.0". (Note: this option is to support internal programming functions)	1
DOORS		
3300-0199-003	Door single vertical hinged diamond plate. (For use on products with integral driprail only) Location(s): L1	1
3300-0201-015	Door double vertical hinged w/rotary latches - diamond plate. (For use on products with integral driprail only) Location(s): R1	1
COVERS		
3305-0007-000-06	Vinyl Red hose bed cover with attached rear flap(s).	1
3305-0167-000-06	Vinyl rear cover for diamond plate cover on pre-connect tray. Color: Red	1
PUMP MODULE		
3130-0412	Pump module for use with frame mounted PTO pump. Will be mounted below tank forward of driver side front compartment and will reduce the size of L1 by approximately 39".	1
PUMP PANELS		
3134-0105	Stainless steel driver side pump panel. Wetside tanker with under tank pump only.	1
MISC PUMP PANEL OPTIONS		
4460-0003	Pump panel tags color coded per NFPA compliance.	1
WATER TANK		
4010-0153	Tank 2000 gallon Wetside. Note: Any foam cell(s) in tank will reduce the overall water capacity. Tank capacity is 2000 US gallons / 1665 Imperial gallons / 7571 Liters.	1
WATER TANK OPTIONS		
4020-0004	Newton dump mounting plate.	1

TANK PLUMBING		
4020-0018	Rear tank dump. Includes painted steel assembly with manual actuated valve on top of dump assembly. For use with slip on extension and chute.	1
4450-0010	2" tank fill Akron manual valve.	1
4450-0121	3" Tank to pump Akron air actuated valve w/4" tank connection.	1
4450-0165-199	3" rear direct tank fill. Includes swing handle control, swivel with droop and plug with retainer. Located to officer's side of the rear body.	1
LADDER STORAGE / RACKS		
3340-0409-198	Adjustable tracks (pair). Locate tracks to driver's side assembly. For use with ladder and/or hard suction rack(s).	1
3365-0183-M12	Hard suction storage rack. Locate driver side in adjustable track (above ladder brackets if applicable). Includes NFPA retaining strap(s).	2
3365-0189-M13-L3	Manual drop-down portable tank storage rack. Includes forward and rearward securing clamps with manual releases. Locate rack to officer side on compartment top of body. Rack sized for steel framed 2100 portable tank.	1
3365-0294	There shall be a metal plate mounted to the side of the portable tank rack to assist in the application of the NFPA stripe.	1
HANDRAILS / STEPS		
3330-0141-525	Access ladder with aluminum side rails and aluminum ribbed extruded steps for NFPA hosebed access and handrail mounted on upper hosebed side (as applicable). LED lighting provided and positioned to illuminate steps per NFPA. Ladder to be located rear of body officer side.	1
MISC BODY OPTIONS		
3090-0002	OAH. Unit has no overall height restrictions.	1
3090-0004	OAL. Unit has no overall length restrictions.	1
3340-0093	Mud flaps, rear, black with E-ONE logo.	1
3340-0523	Hosebed area above booster tank. Includes raised sides and front of water tank, slatted flooring and adjustable divider extrusions.	1
3340-0552	Double pre-connect tray on top of the drivers side compartment top offset to the rear. Tray to be "U" shape to hold 200' of 1.75" DJ (each). Includes hinged diamond plate cover.	1
3340-0588	Slip-on painted steel dump elbow and 36" straight extension chute. Includes body mounted removable support arm and mounting brackets at rear of body for elbow and straight chute.	1
3340-0612	Diamond plate shield over electrical items mounted on extended box at upper rear of Wetside tank.	1
3340-0682	Body mainframe layout line to be 25". Includes body and all applicable modules.	1
PUMPS		
4005-0103	Rating 500 GPM.	1
4005-0144	Hale AP PTO driven pump. Includes driver side 5" intake with cap (shipped loose).	1

	Capacity of 500GPM/1892LPM. For use with Wetside Tanker only.	
PUMP CERTIFICATION		
4475-0004	Pump certification 250-500 GPM	1
PUMP OPTIONS		
4015-0073	Manual operated master pump drain. The master drain shall be clearly marked and placed in accessible location rearward below running board on driver side or L1 compartment.	1
4015-0186	Trident Pump Primer W/3 Barrel Push Button Control. (In place of standard primer.)	1
INTAKES		
4440-0005	2.5" Left Intake Akron Manual Valve.	1
INTAKE OPTIONS		
4445-0009	Intake relief valve, Akron.	1
DISCHARGES AND PRECONNECTS		
4415-0014-581	2.5" Left Pump Panel Discharge Akron Manual Valve. Location: left side discharge 1.	1
4415-0014-582	2.5" Left Pump Panel Discharge Akron Manual Valve. Location: left side discharge 2.	1
4415-0875	Pair of 1.5" preconnect discharges with Akron manual valves. For use with narrow Wetside tank with driver side compartment top pre-connect storage. Plumbing to terminate with 1.5" MNST threads.	1
DISCHARGE OPTIONS		
4417-0070	Push-Pull "T" handle controls.	1
4417-0176	Innovative Controls 3/4" bleeder/drain valve include lift lever with ergonomic grip.	4
4417-0185	Innovative Controls discharge and intake bezels with integral color code and verbiage for side mount pump panel.	1
PRESSURE GOVERNORS		
4465-0020	Class 1 TPG Plus pressure governor. Includes master intake and discharge gauges, water, oil, volt and tachometer.	1
GAUGES		
4435-0083	Innovative Controls 10 LED SL series water tank level gauge. On pump panel.	1
4435-0085-318	Innovative Controls 10 LED SL series tank level water gauge, additional. Location: rear center body.	1
4435-0246	2.5" Innovative Controls stainless steel case pressure gauge (0-400) with color code bezel.	4
ELECTRICAL SYSTEMS		
5010-0014-G97	Vehicle data recorder for commercial cab - 2009 NFPA compliant. Includes occupant	1

	detection with display. Display location: cab dash above transmission shift panel.	
5010-0036	V-MUX Electrical system for pumper / tanker / rescue.	1
LIGHT BARS		
5300-0267	Light bar Whelen Justice model JE2NFPA 56" LED with clear lenses and MKEZ7 mounts. N/A on Vista roofs with front facing windows. Includes (4) red corner facing LIN6 LED lights, (6) forward facing CON3 Linear LED lights; (4) red, (2) white. Location: Centered on the front cab roof.	1
WARNING LIGHT PACKAGES		
5550-0182-P27	Whelen LED lower level warning light package. Includes (10) red LIN3 lights w/chrome flanges. Locate side facing lights: at forward most position, in rear wheelwell offset to front, and in rear wheelwell offset to rear.	1
WARNING LIGHTS		
5600-0086-479-09	Whelen beacon model RB6T (PR) with driver amber, officer red domes. Location: rear upper body on aerial style brackets.	1
5600-0105-170	Hazard (door ajar) light 2" LED. Location: center overhead.	1
SIRENS		
5500-0015	Whelen model 295SLSA1 siren with microphone (replaced 295HFSA1).	1
5500-0024-170	The electronic siren control is to be located on the center overhead.	1
SPEAKERS		
5510-0029-211	Speaker, Federal Signal Dynamax ES100 with "E-ONE" grille through bumper. Location: officer side front bumper.	1
DOT LIGHTING		
5150-0017	License plate light LED with chrome housing located at the rear of the body.	1
5150-0042	Federal Signal LED tail lights. Includes 4" diameter red LED stop/tail, amber turn and LED clear back-up.	1
5150-0112	Marker light package .75" Dia LED TecNiq. Commercial pumper and Wetside tanker bodies only.	1
LIGHTS - COMPARTMENT, STEP & GROUND		
5380-0200	Ground light package EON LED - small.	1
5380-0205	Cab step lighting package. Includes (2) EON LED lights per side.	1
5380-0255	Compartment light package ROM V4 LED (2) for Wetside tanker. Includes one 12" light per compartment.	1
LIGHTS - DECK AND SCENE		
5390-0076	Hose bed light Truck-Lite LED model 81380. Locate at front of hose bed. Switched with work light switch in cab.	1
5390-0115	Whelen 600 series gradient Super-LED scene lights (6). Switch in cab (driver and officer side lights switched separately). Lights located (2) each side of body up high	1

	(offset forward and rearward) and (2) at rear of body up high. Wetside only.		
LIGHTS - NON-WARNING			
5400-0003	Engine compartment light (EA).	1	
5400-0143	Pump panel LED light package for side mount. Includes (3) TecNiq EON lights with S/S housings. Includes S/S light shield. Wetside only.	1	
5400-0152	Pump compartment light EON LED. Includes switch on pump operator's panel.	1	
MISC ELECTRICAL			
5110-0017	Back-up alarm 97 dB.	1	
HOSE / NOZZLES			
7700-0012	Hard suction hose 5" X 10' with Pyrolite couplings.	2	
MISC LOOSE EQUIPMENT			
7900-0008	Chrome Barrel Strainer 5".	1	
7900-0014	DOT Required Drive Away Kit - Kit includes three (3) triangular warning reflectors with carrying case. This kit is for the end user and is to remain with the truck.	1	
EXTERIOR PAINT			
8100-0377	Body to be unpainted.	1	
8100-0400	Wetside water tank to be unpainted.	1	
STRIPING			
8300-0002-Q55-12	NFPA Scotchlite Stripe - 4" wide and straight on front/sides of cab and sides/rear of body. Color: White. Location: low on side of cab and low on side of wetside tank.	1	
8300-0177-000-72	Chevron "A" style 6" printed sheet Scotchlite striping on rear of Wetside body (on panels only - not tank). Colors to be Yellow/Red.	1	
WARRANTY / STANDARD & EXTENDED			
9100-0000	Standard 1 Year Warranty.	1	
9100-0004	10 Year/100,000 Mile Structural Warranty for Alum Cab / Body - Statement of Warranty.	1	
9100-0005	10 Year Stainless Steel Plumbing Warranty - Statement of Warranty.	1	
SUPPORT, DELIVERY, INSPECTIONS AND MANUALS			
9300-0009	Manuals, Operator and Service CD-ROM.	1	
9300-0316	Fire Apparatus Safety Guide published by FAMA, latest edition.	1	
PRICE	2016 E-ONE WETSIDE SA TANKER - FREIGHTLINER 2DR CHASSIS		$206,375

STATE OF OHIO TERM SCHEDULE

4200 SURFACE RD
COLUMBUS, OH 43228

Quote No: 57498

3/26/2015

Quote Rev:6 Drawing Rev:3

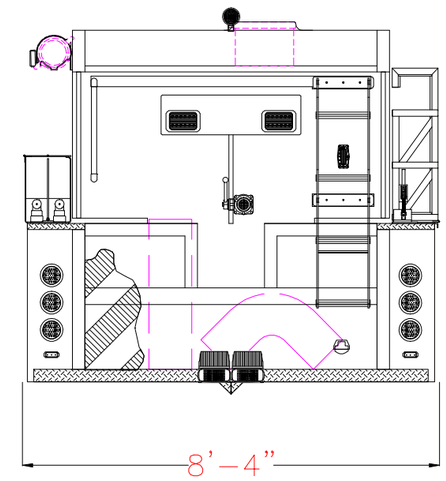

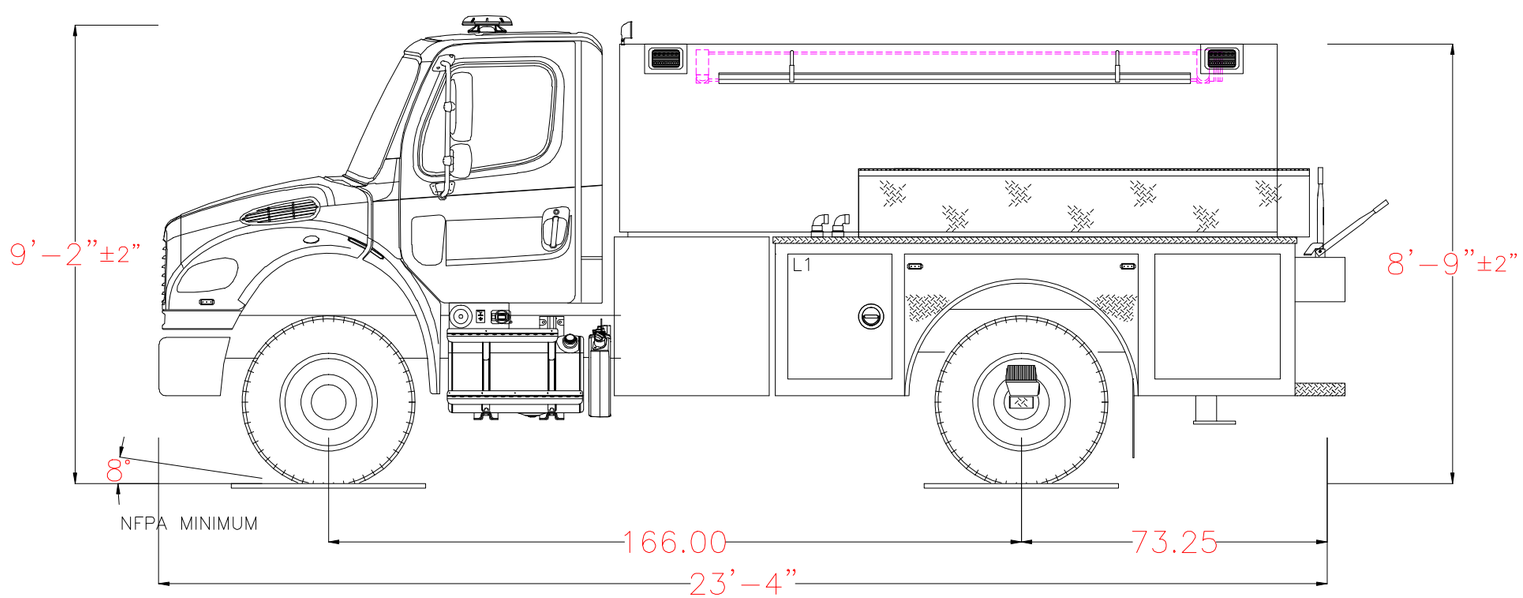

POWERED BY EZDRAW

Notice This drawing provides a GENERAL REPRESENTATION of the vehicle configuration and should be used for evaluation purposes. The respective dimensions shown,including overall height and length, are estimates and may vary due to manufacturing processes. All other items such as lighting and fixtures, plumbing, compartmentation, and other generally assembled details are shown for REFERENCE ONLY and may not be a direct reflection of the final truck configuration. In ALL situations where this drawing may conflict with the specifications, THE SPECIFICATIONS, AS REFLECTED IN THE APPROVED SHOP ORDER, SHALL PREVAIL. Unless otherwise specified, the proposed apparatus will be manufactured to the latest NFPA recommendations as well as other applicable federally regulated safety regulations. E-One reserves the right to engineer and incorporate design improvements and changes without notice, while adhering to the intent of the specification.

	HOSE LOADS :
0 GPM PUMP	
0 TOTAL VOLUME	
0 TOTAL FOAM	

	OPENING		INTERIOR DIMENSIONS				
COMPT.	WIDTH	HEIGHT	WIDTH	LOWER HEIGHT	LOWER DEPTH	UPPER HEIGHT	UPPER DEPTH
L1	25	30	25	30	26	N/A	N/A

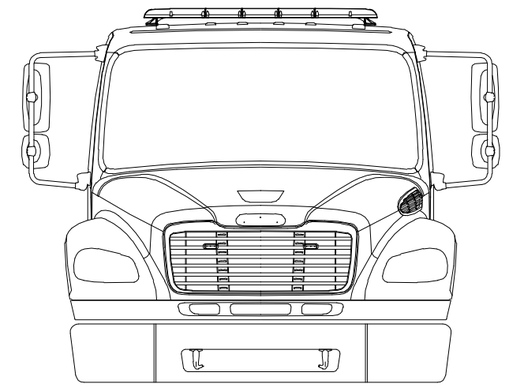

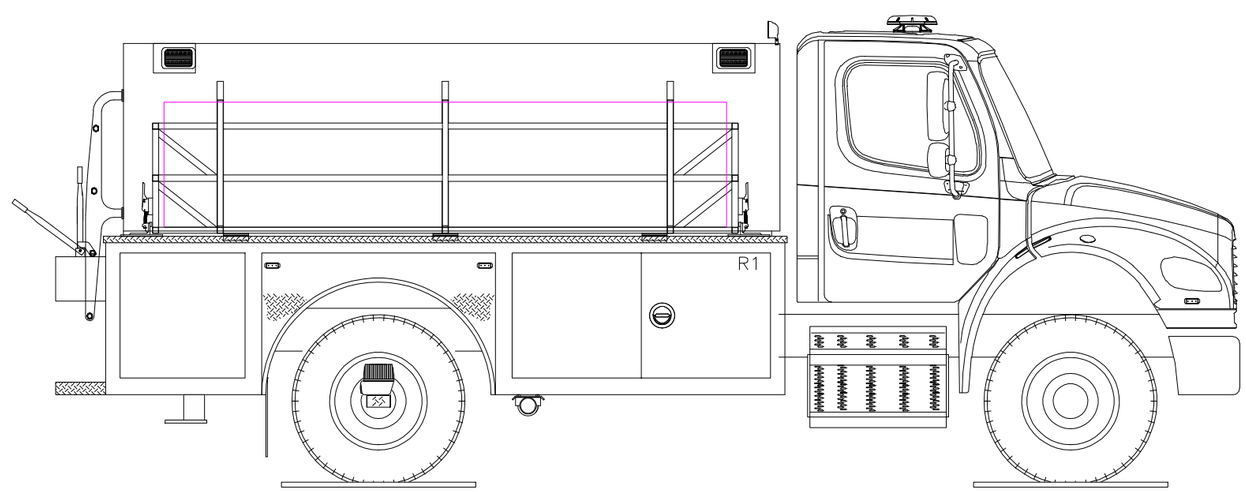

POWERED BY EZDRAW

Fire Apparatus Quotation for:
STATE OF OHIO TERM SCHEDULE

Quotation Number: 57499 Rev: 5

Unit Description: WTTA-COMM

Quote Description: Tanker, Wetside, Tandem Axle, Aluminum

Salescode	Extended Description	Qty
TESTING COMPLIANCE STANDARD		
1001-0024	The E-ONE supplied components of the vehicle shall meet the requirements of NFPA 1901, 2009 edition (ULC as applicable) as a Tanker.	1
CHASSIS PREP		
1020-0010	Comm Chassis Prep E-1 Supp-FL.	1
TIRE OPTIONS		
1060-0119	RWC AirGuard LED tire pressure monitoring valve stem caps (10) for tandem rear axle applications.	1
AIR SYSTEM OPTIONS		
1110-0010-277	Air inlet. To charge brake system. Commercial chassis only. Location: driver's door step area.	1
1110-0076	Dual Stuttertone hood mounted air horns with driver and officer foot switches to be supplied and installed by Freightliner.	1
ENGINES & TRANSMISSIONS		
1200-0137	Electronic speed limiting set to 60 MPH.	1
1200-0257	Freightliner Cummins ISL 350 HP 2013 EPA engine.	1
CHASSIS OPTIONS		
1680-0011	Tow eyes rear below body, painted.	1
1680-0078	Tow hooks front OEM. Not available with extended E-ONE installed front bumper. Tow hooks are OEM supplied with chassis.	1
1680-0104	OEM chassis step package for Freightliner M2 series. Includes mounting plate for the battery charger receptacle and air inlet.	1
CAB MODEL		
1520-0085	Freightlner M2 106 two door cab.	1
MISC EXTERIOR CAB OPTIONS		
1675-0007	Diesel fuel only label.	1

SEATS		
1685-0012	Seating capacity tag of two occupants.	1
CAB ELECTRICAL OPTIONS		
1750-0059-277-04	Receptacle inlet 20 amp with a Yellow cover. Location: driver's door step area.	1
1750-0343	Battery charger E-ONE LPC 20. 120 volt inlet, 20 amp output.	1
BODY MODEL		
3080-0193	Extruded alum body for Wetside water tank, tandem axle chassis with driver side under tank pump. Includes driver and officer side forward lower body compartments, dia plt wheel well area and flat back style rearend with 12" tailboard.	1
BODY SPEC		
3090-0031-T08	The cab to body gap is approx 3.4". (Note: this option is to support internal programming functions)	1
DOORS		
3300-0199-003	Door single vertical hinged diamond plate. (For use on products with integral driprail only) Location(s): L1	1
3300-0201-015	Door double vertical hinged w/rotary latches - diamond plate. (For use on products with integral driprail only) Location(s): R1	1
COVERS		
3305-0007-000-06	Vinyl Red hose bed cover with attached rear flap(s).	1
3305-0167-000-06	Vinyl rear cover for diamond plate cover on pre-connect tray. Color: Red	1
PUMP MODULE		
3130-0412	Pump module for use with frame mounted PTO pump. Will be mounted below tank forward of driver side front compartment and will reduce the size of L1 by approximately 39".	1
PUMP PANELS		
3134-0105	Stainless steel driver side pump panel. Wetside tanker with under tank pump only.	1
MISC PUMP PANEL OPTIONS		
4460-0003	Pump panel tags color coded per NFPA compliance.	1
WATER TANK		
4010-0151	Tank 3000 gallon Wetside. Note: Any foam cell(s) in tank will reduce the overall water capacity. Tank capacity is 3000 US gallons / 2498 Imperial gallons / 11356 Liters.	1
WATER TANK OPTIONS		
4020-0004	Newton dump mounting plate.	1

TANK PLUMBING		
4020-0018	Rear tank dump. Includes painted steel assembly with manual actuated valve on top of dump assembly. For use with slip on extension and chute.	1
4450-0010	2" tank fill Akron manual valve.	1
4450-0121	3" Tank to pump Akron air actuated valve w/4" tank connection.	1
4450-0165-199	3" rear direct tank fill. Includes swing handle control, swivel with droop and plug with retainer. Located to officer's side of the rear body.	1
LADDER STORAGE / RACKS		
3340-0409-198	Adjustable tracks (pair). Locate tracks to driver's side assembly. For use with ladder and/or hard suction rack(s).	1
3365-0183-M12	Hard suction storage rack. Locate driver side in adjustable track (above ladder brackets if applicable). Includes NFPA retaining strap(s).	2
3365-0189-M13-L7	Manual drop-down portable tank storage rack. Includes forward and rearward securing clamps with manual releases. Locate rack to officer side on compartment top of body. Rack sized for steel framed 3000 portable tank.	1
3365-0294	There shall be a metal plate mounted to the side of the portable tank rack to assist in the application of the NFPA stripe.	1
HANDRAILS / STEPS		
3330-0141-525	Access ladder with aluminum side rails and aluminum ribbed extruded steps for NFPA hosebed access and handrail mounted on upper hosebed side (as applicable). LED lighting provided and positioned to illuminate steps per NFPA. Ladder to be located rear of body officer side.	1
MISC BODY OPTIONS		
3090-0002	OAH. Unit has no overall height restrictions.	1
3090-0004	OAL. Unit has no overall length restrictions.	1
3340-0093	Mud flaps, rear, black with E-ONE logo.	1
3340-0524	Hosebed area above booster tank. Includes raised sides and front of water tank, slatted flooring and adjustable divider extrusions.	1
MISC BODY OPTIONS		
3340-0552	Double pre-connect tray on top of the drivers side compartment top offset to the rear. Tray to be "U" shape to hold 200' of 1.75" DJ (each). Includes hinged diamond plate cover.	1
3340-0588	Slip-on painted steel dump elbow and 36" straight extension chute. Includes body mounted removable support arm and mounting brackets at rear of body for elbow and straight chute.	1
3340-0612	Diamond plate shield over electrical items mounted on extended box at upper rear of Wetside tank.	1
3340-0681	Body mainframe layout line to be 24". Includes body and all applicable modules.	1
PUMPS		
4005-0103	Rating 500 GPM.	1

4005-0144	Hale AP PTO driven pump. Includes driver side 5" intake with cap (shipped loose). Capacity of 500GPM/1892LPM. For use with Wetside Tanker only.	1
PUMP CERTIFICATION		
4475-0004	Pump certification 250-500 GPM	1
PUMP OPTIONS		
4015-0073	Manual operated master pump drain. The master drain shall be clearly marked and placed in accessible location rearward below running board on driver side or L1 compartment.	1
4015-0186	Trident Pump Primer W/3 Barrel Push Button Control. (In place of standard primer.)	1
INTAKES		
4440-0005	2.5" Left Intake Akron Manual Valve.	1
INTAKE OPTIONS		
4445-0009	Intake relief valve, Akron.	1
DISCHARGES AND PRECONNECTS		
4415-0014-581	2.5" Left Pump Panel Discharge Akron Manual Valve. Location: left side discharge 1.	1
4415-0014-582	2.5" Left Pump Panel Discharge Akron Manual Valve. Location: left side discharge 2.	1
4415-0875	Pair of 1.5" preconnect discharges with Akron manual valves. For use with narrow Wetside tank with driver side compartment top pre-connect storage. Plumbing to terminate with 1.5" MNST threads.	1
DISCHARGE OPTIONS		
4417-0070	Push-Pull "T" handle controls.	1
4417-0176	Innovative Controls 3/4" bleeder/drain valve include lift lever with ergonomic grip.	4
4417-0185	Innovative Controls discharge and intake bezels with integral color code and verbiage for side mount pump panel.	1
PRESSURE GOVERNORS		
4465-0020	Class 1 TPG Plus pressure governor. Includes master intake and discharge gauges, water, oil, volt and tachometer.	1
GAUGES		
4435-0083	Innovative Controls 10 LED SL series water tank level gauge. On pump panel.	1
4435-0085-318	Innovative Controls 10 LED SL series tank level water gauge, additional. Location: rear center body.	1
4435-0246	2.5" Innovative Controls stainless steel case pressure gauge (0-400) with color code bezel.	4
ELECTRICAL SYSTEMS		

5010-0014-G97	Vehicle data recorder for commercial cab - 2009 NFPA compliant. Includes occupant detection with display. Display location: cab dash above transmission shift panel.	1
5010-0036	V-MUX Electrical system for pumper / tanker / rescue.	1
LIGHT BARS		
5300-0267	Light bar Whelen Justice model JE2NFPA 56" LED with clear lenses and MKEZ7 mounts. N/A on Vista roofs with front facing windows. Includes (4) red corner facing LIN6 LED lights, (6) forward facing CON3 Linear LED lights; (4) red, (2) white. Location: Centered on the front cab roof.	1
WARNING LIGHT PACKAGES		
5550-0182-P27	Whelen LED lower level warning light package. Includes (10) red LIN3 lights w/chrome flanges. Locate side facing lights: at forward most position, in rear wheelwell offset to front, and in rear wheelwell offset to rear.	1
WARNING LIGHTS		
5600-0086-479-09	Whelen beacon model RB6T (PR) with driver amber, officer red domes. Location: rear upper body on aerial style brackets.	1
5600-0105-170	Hazard (door ajar) light 2" LED. Location: center overhead.	1
SIRENS		
SIRENS		
5500-0015	Whelen model 295SLSA1 siren with microphone (replaced 295HFSA1).	1
5500-0024-170	The electronic siren control is to be located on the center overhead.	1
SPEAKERS		
5510-0029-211	Speaker, Federal Signal Dynamax ES100 with "E-ONE" grille through bumper. Location: officer side front bumper.	1
DOT LIGHTING		
5150-0017	License plate light LED with chrome housing located at the rear of the body.	1
5150-0042	Federal Signal LED tail lights. Includes 4" diameter red LED stop/tail, amber turn and LED clear back-up.	1
5150-0112	Marker light package .75" Dia LED TecNiq. Commercial pumper and Wetside tanker bodies only.	1
LIGHTS - COMPARTMENT, STEP & GROUND		
5380-0200	Ground light package EON LED - small.	1
5380-0205	Cab step lighting package. Includes (2) EON LED lights per side.	1
5380-0255	Compartment light package ROM V4 LED (2) for Wetside tanker. Includes one 12" light per compartment.	1
LIGHTS - DECK AND SCENE		
5390-0076	Hose bed light Truck-Lite LED model 81380. Locate at front of hose bed. Switched with work light switch in cab.	1

5390-0115	Whelen 600 series gradient Super-LED scene lights (6). Switch in cab (driver and officer side lights switched separately). Lights located (2) each side of body up high (offset forward and rearward) and (2) at rear of body up high. Wetside only.	1	
LIGHTS - NON-WARNING			
5400-0003	Engine compartment light (EA).	1	
5400-0143	Pump panel LED light package for side mount. Includes (3) TecNiq EON lights with S/S housings. Includes S/S light shield. Wetside only.	1	
5400-0152	Pump compartment light EON LED. Includes switch on pump operator's panel.	1	
MISC ELECTRICAL			
5110-0017	Back-up alarm 97 dB.	1	
HOSE / NOZZLES			
7700-0012	Hard suction hose 5" X 10' with Pyrolite couplings.	2	
MISC LOOSE EQUIPMENT			
7900-0008	Chrome Barrel Strainer 5".	1	
7900-0014	DOT Required Drive Away Kit - Kit includes three (3) triangular warning reflectors with carrying case. This kit is for the end user and is to remain with the truck.	1	
EXTERIOR PAINT			
8100-0377	Body to be unpainted.	1	
8100-0400	Wetside water tank to be unpainted.	1	
STRIPING			
8300-0002-Q55-12	NFPA Scotchlite Stripe - 4" wide and straight on front/sides of cab and sides/rear of body. Color: White. Location: low on side of cab and low on side of wetside tank.	1	
8300-0177-000-72	Chevron "A" style 6" printed sheet Scotchlite striping on rear of Wetside body (on panels only - not tank). Colors to be Yellow/Red.	1	
WARRANTY / STANDARD & EXTENDED			
9100-0000	Standard 1 Year Warranty.	1	
9100-0004	10 Year/100,000 Mile Structural Warranty for Alum Cab / Body - Statement of Warranty.	1	
9100-0005	10 Year Stainless Steel Plumbing Warranty - Statement of Warranty.	1	
SUPPORT, DELIVERY, INSPECTIONS AND MANUALS			
9300-0009	Manuals, Operator and Service CD-ROM.	1	
9300-0316	Fire Apparatus Safety Guide published by FAMA, latest edition.	1	
PRICE	2016 E-ONE WETSIDE TA TANKER - FREIGHTLINER 2DR CHASSIS		$223,306

STATE OF OHIO TERM SCHEDULE

4200 SURFACE RD
COLUMBUS, OH 43228

Quote No: 57499

3/26/2015

Quote Rev:5 Drawing Rev:4

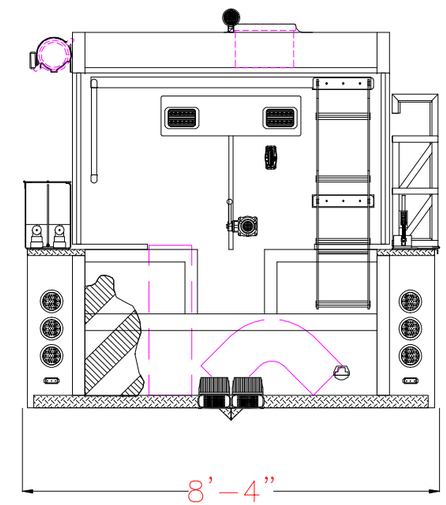

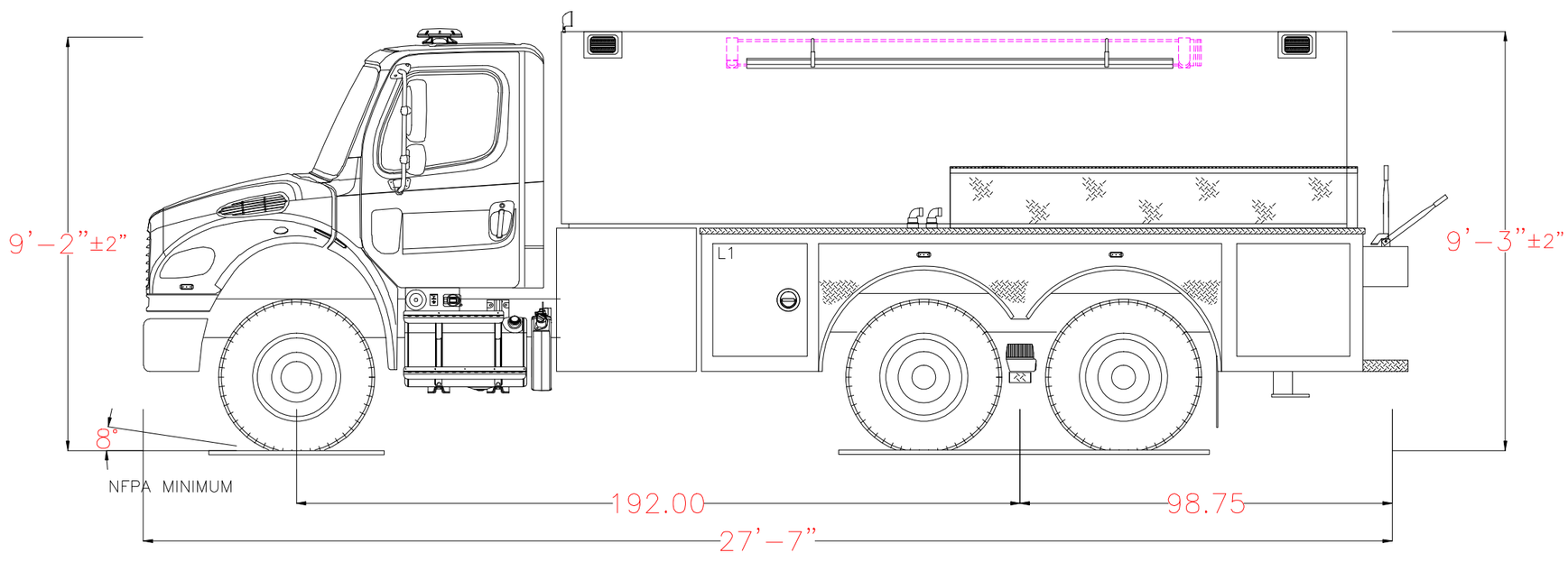

POWERED BY EZDRAW

Notice: This drawing provides a GENERAL REPRESENTATION of the vehicle configuration and should be used for evaluation purposes. The respective dimensions shown,including overall height and length, are estimates and may vary due to manufacturing processes. All other items such as lighting and fixtures, plumbing, compartmentation, and other generally assembled details are shown for REFERENCE ONLY and may not be a direct reflection of the final truck configuration. In ALL situations where this drawing may conflict with the specifications, THE SPECIFICATIONS, AS REFLECTED IN THE APPROVED SHOP ORDER, SHALL PREVAIL. Unless otherwise specified, the proposed apparatus will be manufactured to the latest NFPA recommendations as well as other applicable federally regulated safety regulations. E-One reserves the right to engineer and incorporate design improvements and changes without notice, while adhering to the intent of the specification.

	HOSE LOADS :
0 GPM PUMP	
0 TOTAL VOLUME	
0 TOTAL FOAM	

	OPENING		INTERIOR DIMENSIONS				
COMPT.	WIDTH	HEIGHT	WIDTH	LOWER HEIGHT	LOWER DEPTH	UPPER HEIGHT	UPPER DEPTH
L1	25	30	25	30	26	N/A	N/A

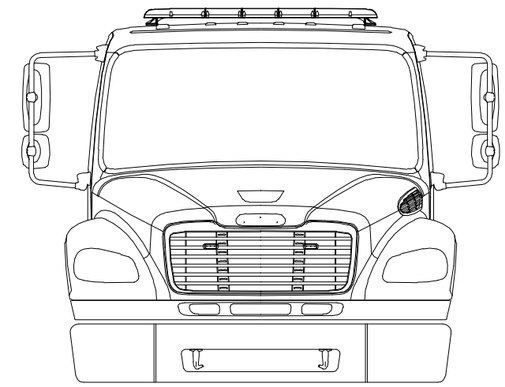

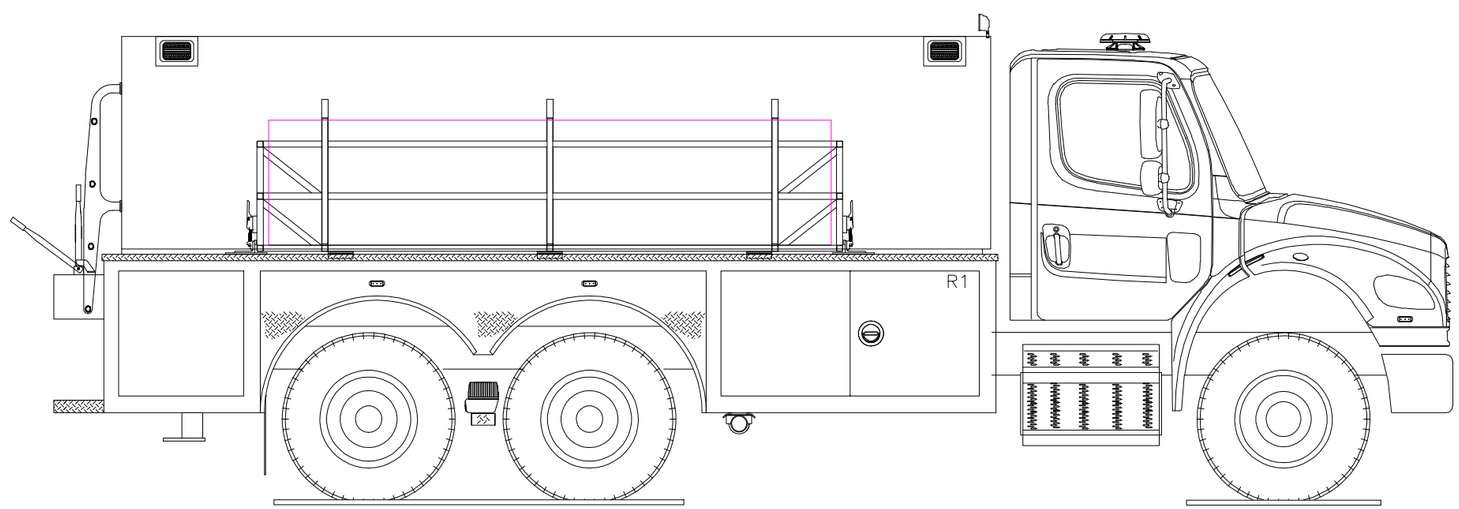

POWERED BY EZDRAW

E-ONE OHIO STATE TERM SCHEDULE 2016 OPTIONS PRICE BOOK
WETSIDE TANKERS - COMMERCIAL CHASSIS

	Commercial Chassis	Price
1520-0083	International 4400 4x2 Chassis, (2) door cab, 169" WB, N9-330hp, Allison 3000EVS, exhaust brake, 14.6k front axle, 30k rear axle, ABS brakes with ATC, steel wheels job color, front tow hooks, chrome bumper, 50 gal fuel tank.	$90,818
1520-0085	Freightliner M2 106 4x2 Chassis, (2) door cab, 166" WB, Cummins ISL330hp, Allison 3000EVS, exhaust brake, 14.6k front axle, 30k rear axle, ABS brakes, steel wheels job color, front tow hooks, chrome bumper, 50 gallon fuel tank, (2) batteries with a 320 AMP alternator.	$94,590
1520-0094	International 7400 6x4 Chassis, (2) door cab, 193" WB, N10-350hp, Allison 3000EVS, exhaust brake, 16k front axle, 40k tandem rear axle with air supension, ABS brakes with ATC, steel wheels job color, front tow hooks, chrome bumper, 50 gal fuel tank.	$99,480
1520-0095	Freightliner M2 106 6x4 Chassis, (2) door cab, 192" WB, Cummins ISL350hp, Allison 3000EVS, exhaust brake, 16k front axle, 40k tandem rear axle, ABS brakes, steel wheels job color, front tow hooks, chrome bumper, 50 gallon fuel tank, (2) batteries with a 320 AMP alternator.	$99,634
	Chassis Mods	**Price**
1020-0011	Comm Chas Prep E-1 Supp-Non FL.	$5,549
1020-0028	Chassis prep for a Kenworth chassis. Includes relocating of batteries to the officer side forward lower body compartment. Includes exhaust positioning, Fast idle control/switching, master lighting switch, master battery switch, auxiliary engine cooler connection and controller and repositioning of batteries with compartment mounted flooring and removable cover.	$6,418
1020-0035	Comm Chas Prep E-1 Supp-Non FL.	$5,549
1050-0029	Front & rear axle wheel simulator kit. Includes stainless steel wheel simulator and center cap with E-ONE logo.	$1,961
1050-0073	Wheel trim package. For use with steel or aluminum wheels.	$506
1060-0050	Tire pressure monitoring valve stem caps.	$188
1060-0117	RWC AirGuard LED tire pressure monitoring valve stem caps (6) for single rear axle applications.	$193
1060-0119	RWC AirGuard LED tire pressure monitoring valve stem caps (10) for tandem rear axle applications.	$307
1060-0123	RWC AirGuard LED tire pressure monitoring valve stem caps (2) front only. For use with rear axle Crossfire equalization systems.	$77
1110-0000	Inlet for air system. Location: [#LOC].	$416
1110-0010	Air inlet. To charge brake system. Commercial chassis only. Location: [#LOC].	$416
1110-0062	Dual Hadley Hood Mounted Air Horns with Driver and Officer Foot Switches to be Supplied and Installed by International.	$647
1110-0118	Inlet for air system. Includes weather proof box and Hubbel [#COL] cover. Location: [#LOC].	$530
1225-0054	Locate exhaust end 3" below rubrail extending 2" past rubrail.	$262
1250-0074	Rear underbody support frame with side tow eye style frame brackets without lower tow eyes to minimize impact on departure angle. To be used with frame mounted tow eyes facing rearward from frame rails.	$1,091
1675-0121	Exterior windshield visor. Includes DOT lighting. Visor painted primary upper cab color. Kenworth.	$143
1675-0137	Tag for front grille, front of bumper and both side of hood shall have a tag that reads "REMOVE MONITOR BEFORE LIFTING". See photos on file.	$295
1680-0011	Tow eyes rear below body, painted.	$670
1680-0012	Tow eyes rear frame painted.	$596
1680-0106	OEM chassis step package for International 4000 and 7000 series. Includes mounting plate for the battery charger receptacle and air inlet.	$170
1680-0203	AM/FM radio with weather band. Kenworth.	$215
1680-0204	Chassis Trim Package for a (2) door Kenworth T370.	$1,419
1680-0239	Tow eyes rear frame painted mounted low just above tailboard.	$596
1680-0252	OEM chassis step package for Kenworth Commercial Chassis. Includes mounting plate for the battery charger receptacle and air inlet.	$170
1680-0282	Tow eyes rear below body, painted. 1" thick material with 3" diameter hole staight down from chassis frame.	$799
1680-0296	Chassis Trim Package for a (2) door Kenworth T440.	$1,448
1680-0301	Cord connector. Daniel Woodhead 3 wire NEMA 5-20 straight blade male located for block heater routed to driver side battery box.	$170
1685-0206	Center control console. Locate in cab between driver and officer. Includes area for NFPA siren, electrical, and in-cab controls (as applicable) switching.	$1,777
1685-0208	The interior dash panels to be burl wood in place of standard. Kenworth	$164
1685-0255	Center control console. Locate in cab between driver and officer. Includes area for NFPA siren, electrical, customer supplied radio cut-out and in-cab controls (as applicable) switching.	$1,777
1685-0265	Smooth plate cover(s) for battery charger and air compressor. These cover's shall be painted to match cab interior and shall include louvers as required for ventilation.	$245
1685-0294	Pre-wire for air horns, 2 floor mounted foot switches (1) driver side (1) officer side for International 4400.	$451
1685-0325	Center control console. Locate in cab between driver and officer. Includes free area for customer supplied equipment to be added. Locate no equipment or switches in this console, using instead locations in overhead as specified.	$1,777
1685-0356	Writing surface cab dash finished same as cab interior. Location: Mount at final inspection.	$227
1685-0372	Map pocket rear cab console aluminum plate to match console finish.	$113
1685-0374	Stack-On model PS-514-12 gun safe. Location: centered on top of rear wall medical cabinet.	$342
1685-0378	Storage console. Locate in cab between driver and officer. Includes (3) 4" wide slots, (1) 6" wide slot and retaining strap.	$1,777
1750-0019	Battery charger Super Smart 110 volt, 20 amp.	$453
1750-0024	Auto-Eject receptacle inlet 20 amp located [#LOC] with a [#COL] cover.	$618
1750-0059	Receptacle inlet 20 amp with a [#COL] cover. Location: [#LOC].	$313

1750-0308	Battery charging connector 12V Anderson with weatherproof cover. Includes mating connector (ship loose). Location: Driver's door step area.	$313
1750-0443	Dome Lts Red/White Whelen model 60CREGCS LED. Package includes two lights mounted in the front of the cab. White light wired through door and light assembly switch. Red light through light assembly switch.	$600
1750-0454	Courtesy light for driver and officer located on front of risers wired through marker lights. Whelen model 0SR00SCR light.	$275
3000	**Body**	
3080-0189	Extruded alum body for Wetside water tank, single axle chassis and individual side mount pump module. Includes driver and officer side forward lower body compartments, dia plt wheel well area and flat back style rearend with 12" tailboard.	$11,502
3080-0190	Extruded alum body for Wetside water tank, tandem axle chassis and individual pump module forward of body. Includes driver and officer side forward lower body compartments, dia plt wheel well area and flat back style rearend with 12" tailboard.	$13,644
3080-0191	Extruded alum body for Wetside water tank, single axle chassis with driver side under tank pump. Includes driver and officer side forward lower body compartments, dia plt wheel well area and flat back style rearend with 12" tailboard.	$11,182
3080-0192	Extruded alum body for Wetside water tank, single axle chassis with driver side under tank pump and officer side forward discharge/intake panel. Includes driver and officer side forward lower body compartments, dia plt wheel well area and flat back style rearend with 12" tailboard.	$11,504
3080-0193	Extruded alum body for Wetside water tank, tandem axle chassis with driver side under tank pump. Includes driver and officer side forward lower body compartments, dia plt wheel well area and flat back style rearend with 12" tailboard.	$13,322
3080-0194	Extruded alum body for Wetside water tank, tandem axle chassis with driver side under tank pump and officer side forward discharge/intake panel. Includes driver and officer side forward lower body compartments, dia plt wheel well area and flat back style rearend with 12" tailboard.	$13,644
3080-0203	Extruded alum body for Wetside water tank, tandem axle chassis with driver side under tank pump and officer side forward discharge/intake panel. Includes driver and officer side forward lower body compartments, space for newton dump in wheel well area and flat back style rearend with 12" tailboard.	$15,384
3080-0221	Extruded alum body for 3500/4000 gallon Wetside water tank, tandem axle chassis. Includes driver and officer side forward lower body compartments, dia plt wheel well area and flat back style rearend with 12" tailboard.	$14,209
3080-0225	Extruded alum body for Wetside water tank, single axle chassis with driver side under tank pump. Includes driver and officer side forward lower body compartments, dia plt wheel well area and flat back style rearend with 12" tailboard. Starting compartment opening to be 34" high ipo standard (25" to roll-up door as applicable).	$12,143
3080-0233	Extruded alum body for Wetside water tank, single axle chassis with tag axle and individual pump module forward of body. Includes driver and officer side forward lower body compartments, dia plt wheel well area and flat back style rearend with 12" tailboard.	$23,232
3080-0236	Extruded alum body for Wetside water tank, tandem axle chassis with tank dump provision in wheelwell. Includes driver and officer side forward lower body compartments, dia plt wheel well area and flat back style rearend with 12" tailboard. Compartment opening to be 36" high ipo standard (27" to roll-up door as applicable).	$15,762
3080-0239	Extruded alum body for Wetside water tank, tandem axle chassis with driver side under tank pump and officer side forward discharge/intake panel. Includes driver and officer side forward lower body compartments, space for newton dump in diamond plate wheel well area and flat back style rearend with 12" tailboard.	$15,825
3080-0242	Extruded alum body for Wetside water tank, tandem axle chassis and individual pump module forward of body. Includes driver and officer side forward lower body compartments, dia plt wheel well area and flat back style rearend with 12" tailboard.	$13,644
3080-0243	Extruded alum body for Wetside water tank, single axle chassis and no pump module. Includes driver and officer side forward lower body compartments, dia plt wheel well area and flat back style rearend with 12" tailboard.	$13,417
3080-0244	Extruded alum body for Wetside water tank, single axle chassis with driver side under tank pump and officer side forward discharge/intake panel. Includes driver and officer side forward lower body compartments, dia plt wheel well area and flat back style rearend with 12" tailboard.	$13,804
3080-0246	Extruded alum body for Wetside water tank, raised 4" for side dump application, tandem axle chassis. Includes driver and officer side forward lower body compartments, dia plt wheel well area and flat back style rearend with 12" tailboard.	$16,373
3100-0258	Driver extruded half side tandem body with 74" wide forward and 34" wide rearward compartmentation.For use with wetside narrow tank application.	$5,626
3110-0155	Extruded lower rearend for use with Wetside tank. Includes smooth plate panels and area for Newton dump application.	$1,078
3110-0180	Bolt-on diamond plate 14" tailboard (full width of body). For use with rear ladder application. Includes handrails- (1) mounted vertical on trailing edge of body opposite side of ladder and handrail(s) horizontal below hosebed.	$1,152
3110-0188	Bolt-on diamond plate 10" tailboard (full width of body). For use with rear ladder application. Includes a handrail vertically mounted on trailing edge of body opposite side of ladder.	$1,002
3110-0210	Bolt-on diamond plate 10" tailboard (full width of body). For use with folding step application. Includes handrails- (1) vertically on trailing edge of body opposite each side of body and handrail(s) horizontally below hosebed.	$1,002
3110-0220	Bolt-on 10" tailboard (full width of body) aluminum smooth plate with black Scorpion coating (IPOS diamond plate). For use with rear ladder application. Includes handrails- (1) vertically on trailing edge of body opposite side of ladder and handrail(s) horizontally below hosebed.	$1,314

3110-0222	Bolt-on 10" diamond plate tailboard (full width of rear compartment). Includes the enhanced extended side compartment frame work. For use with rear ladder application. Includes handrails (1) vertical mounted on trailing edge of body opposite side of ladder and (1) horizontal mounted handrail(s) below hosebed.	$2,191
3110-0230	Bolt-on 10" tailboard (full width of body) aluminum smooth plate with black Scorpion coating (rough finish) IPOS diamond plate. For use with rear ladder application. Includes handrails- (1) vertically on trailing edge of body opposite side of ladder and handrail(s) horizontally below hosebed.	$1,314
3110-0238	Bolt-on diamond plate 18" tailboard (full width of body). Includes handrails- (2) vertically on trailing edge of body and handrail(s) horizontally below hosebed.	$1,909
3110-0243	Bolt-on diamond plate 16" tailboard (full width of body). For use with rear ladder application. Includes handrails- (1) vertically on trailing edge of body opposite side of ladder and handrail(s) horizontally below hosebed.	$1,840
3110-0246	Bolt-on diamond plate 18" tailboard (full width of body). For use with rear ladder application. Includes handrails- (1) vertically on trailing edge of body opposite side of ladder and handrail(s) horizontally below hosebed.	$1,909
3110-0256	Bolt-on diamond plate 14" tailboard (full width of body). For use with dual rear ladder application. Includes handrail horizontally mounted below hosebed.	$1,152
3110-0290	Bolt-on diamond plate 12" tailboard (full width of body). For use with rear ladder application. Includes handrails- (1) vertical on trailing edge of body opposite side of ladder and handrail(s) horizontal below hosebed.	$1,087
3110-0299	1" X 1.5" extrusion added to lower B1 compartment door opening to form a 10" wide notch offset to officer side for 5" LDH hose connected to customer supplied and installed valve stored in B1. This will also require floor mounted rollout tray to be raised to clear lower door opening.	$386
3110-0309	Bolt-on 3/16" (.1875") smooth plate painted black Durabak 10" tailboard (full width of body). For use with rear ladder application. Includes handrails- (1) vertical on trailing edge of body opposite side of ladder and handrail(s) horizontal below hosebed.	$1,252
3120-0419	Officer extruded half side tandem body with 74" wide forward and 34" wide rearward compartmentation.For use with wetside narrow tank application.	$5,626
3130-0003	Pump module. Includes 39" wide pump panel opening and running boards.	$5,402
3130-0012	Upper SM pump module with double stacked double crosslays and diamond plate storage pan.	$1,592
3130-0401	Crosslay double with dry lay. Includes (2) double stack crosslays to hold up to 200' of 2.0" DJ each and (1) dry lay to hold up to 200' of 2.5" DJ. Wetside tanker only.	$1,592
3130-0402	Pump module side mount with 33" wide pump panel opening. Includes dia plt running boards. Wetside tanker only.	$3,521
3130-0433	Crosslay double. Includes (2) double stack crosslays to hold up to 200' of 2.0" DJ each and a diamond plate cover over module to rear of crosslays. Wetside tanker only.	$1,503
3130-0434	Crosslay double. Includes (2) double stack crosslays to hold up to 200' of 2.0" DJ each and a diamond plate storage pan to rear of crosslays. Wetside tanker only.	$1,969
3130-0454	Upper SM pump module with double stacked double crosslays and diamond plate storage pan. Crosslay divider to be adjustable side to side.	$1,976
3130-0478	Pump module top mount with 39" wide pump panel opening and integral walkway (no compartments). Includes dia plt running boards. Wetside tanker only.	$4,585
3130-0479	Crosslay Triple. Includes (3) single stack crosslays to hold up to 200' of 2.0" DJ each. Wetside tanker only.	$1,503
3130-0522	Upper SM pump module with double stacked triple crosslay, deck gun channel and backboard storage. The rear crosslay is for dry hose storage.	$2,799
3130-0559	Crosslay triple double stacked. Includes (2) double stack crosslays to hold up to 200' of 2.0" DJ each and (1) crosslay to hold up to 200' of 2.5" DJ. Wetside tanker only.	$1,592
3130-0576	Crosslay double. Includes (2) single stack crosslays to hold up to 200' of 2.0" DJ each and a diamond plate storage pan to rear of crosslays. Wetside tanker only.	$1,969
3130-0614	Pump module top mount with 39" wide pump panel opening, triple sgl stack crosslays rear of TM panel and integral walkway with compartments. Includes dia plt running boards.	$9,061
3130-0638	Crosslay triple. Includes (2) double stack crosslays forward to hold up to 200' of 2.0" DJ each, and (1) double stacked crosslay rearward to hold up to 150' of 2.5" DJ. Wetside tanker only.	$1,857
3134-0006	The single gauge panel on the driver's side of the side mount module is to be hinged downward. Includes two (2) cable hold opens, and latches.	$147
3134-0011	Officer side pump panel to be vertical hinged on forward extrusion. Panel(s) to be secured in the closed position with push button latches. Upper panel to be held open with gas shock.	$543
3134-0097	Rearward area pump panel header panels for use with hinged panels (vertical and horizontal) and forward body/tank mounted lighting with poles.	$544
3134-0098	The driver side under mount pump panel to be stainless steel. Includes panel supports and hinged upper diamond plate top with hold-down.	$702
3134-0099	The driver and officer side under mount pump panel to be stainless steel. Includes panel supports and hinged upper diamond plate top (driver side) with hold-down.	$1,003
3134-0101	The driver side pump panel below tank to be painted Zolatone black. Wetside Tanker Only.	$461
3134-0102	The driver side under mount pump panel to be stainless steel. Includes panel supports and hinged upper diamond plate top (driver side) with hold-down. The officer side panel will be constructed of the same material as the body compartment.	$1,003
3134-0108	Booster reel rewind switch. Switch guarded half moon. Location on driver side upper pump display panel.	$32
3134-0109	Booster reel rewind switch. Switch guarded half moon. Location on driver side upper pump display panel.	$32
3134-0110	Gauge panel on the driver's side compartment top for under tank pump module. Panel is to be hinged downward. Includes two (2) cable hold opens, and latches. To include Fuel Gauge, Class 1 TPG Control, Suction and Pressure Gauges, Tank to Pump Switch, Tank Level Gauge and Guarded Hose Reel Switch. Panel to be painted Zolatone black. OKC Only.	$494
3136-0100	Notched Speedlay divider(s) on the both for connecting preconnect hoses. Notch to be 12"L X 4"H enough room to use a spanner wincher for connecting hoses.	$103

3136-0101	Diamond plate shield for under tank pump module on Wetside Tankers. Shield shall be mounted vertcally at the front of the module.	$347
3136-0104	The lower area of the under frame pump compartment to have a four (4) sided heat pan with two (2) removable (side to side) bottoms. Bottoms to be secured in the closed position with butterfly latches. Wetsides Only.	$1,093
3136-0106	One (1) pump compartment heater is to be mounted in the pump area. Locate as low as possible.	$756
3136-0127	The pump module storage pan shall be upgraded to include a hinged cover. The hinged cover shall be constructed of 3/16" embossed aluminum tread plate, include a grab handle, (2) butterfly latches and hold open device(s). The cover shall be included in the door ajar circuit and may be used a walking surface.	$558
3136-0133	Removable Poly Speedlay Tray(s). The floor of the tray(s) to be slotted to prevent the accumulation of water and allow for ventilation of wet hose.	$600
3136-0155	Stainless steel roller assemblies to span full width of the bottom of hosebed and side to assist in deployment of hose.	$948
3300-0009	Door single vertical hinged diamond plate. Location(s): [#LOC]	$565
3300-0010	Door double vertical hinged diamond plate. Location(s): [#LOC].	$808
3300-0011	Door single horizontal hinged lift-up box pan configuration painted. Location(s): [#LOC]	$784
3300-0017	Door roll up short (up to 45") with satin finish ROM. Location(s): [#LOC].	$905
3300-0107	Pull down straps for lift-up door. Loc: [#LOC].	$112
3300-0198	Door single vertical hinged painted. (For use on products with integral driprail only) Location(s): [#LOC]	$770
3300-0199	Door single vertical hinged diamond plate. (For use on products with integral driprail only) Location(s): [#LOC]	$528
3300-0200	Door double vertical hinged w/rotary latches - painted. (For use on products with integral driprail only) Location(s): [#LOC]	$844
3300-0201	Door double vertical hinged w/rotary latches - diamond plate. (For use on products with integral driprail only) Location(s): [#LOC]	$754
3300-0215	Additional roll up door stop latches (PR) shall be mounted at a raised location aligned with the reduced depth transition area. The raised latches/hooks shall not be included as part the door ajar circuit. Location(s): [#LOC].	$78
3300-0219	Install dealer supplied roll up doors. The roll up doors for location(s): [#LOC]. shall be dealer supplied. These door kit(s) as supplied will be complete and correct for compartment(s) specified. E-ONE manufacturing shall install these dealer supplied ROM roll up door(s).	$252
3300-0238	Door single horizontal hinged lift-up box pan configuration painted. EOD USAF. Location(s): [#LOC]	$784
3305-0007	Vinyl [#COL] hose bed cover with attached rear flap(s).	$930
3305-0008	Vinyl [#COL] crosslay cover with attached side flaps.	$326
3305-0167	Vinyl rear cover for diamond plate cover on pre-connect tray. Color: [#COL]	$104
3305-0175	Vinyl fire retardent [#COL] hose bed cover with attached rear flap(s).	$1,162
3305-0183	Vinyl [#COL] crosslay cover with attached side flaps with bungee cord.	$407
3305-0189	The rear flap(s) of the hosebed cover shall be upgraded to add weight to the bottom of the rear vertical flap(s).	$578
3305-0198	Diamond plate preconnect cover. Cover to attach to preconnect tray mounted on compartment top and protect preconnect discharge(s).	$449
3305-0212	Vinyl fire retardent [#COL] hosebed cover with twist locks fasteners and bungee cord attached rear flap(s). Cover to be partial hosebed cover leaving hosebed walkway area uncovered. To extend full length of the hosebed from roof top compartment on the side to divider against walkway in the middle and to hosebed storage pan rearward mounting flange at the front.	$1,500
3305-0238	Vinyl [#COL] hose bed covers with attached rear flaps. Two Seperate covers for bi-level hose bed sides stepped to clear overhead rack assembly.	$1,116
3305-0243	Vinyl [#COL] crosslay cover with attached side flaps. Includes side snaps.	$406
3305-0255	Diamonda plate battery box to protect batteries. Cover includes louvers. Locate in hosebed offset to officer side.	$434
3305-0258	Vinyl front cover for diamond plate cover on pre-connect tray. Color: [#COL]	$104
3305-0274	Vinyl black hose bed cover with attached rear flap, on one side only, to the top of the hose bed storage compartment.	$930
3305-0276	Vinyl red crosslay cover top with attached nylon red cargo net on each side of cover.	$623
3320-0005	SCBA Bottle Storage. (4) Cast Product SCBA bottle storage with gasketed doors. (2) each side in rear wheel well area.	$806
3325-0018	There will be a thru shaft for the generator to work off the same PTO as HRT system.	$2,415
3330-0008	Handrail 12". Location [#LOC].	$125
3330-0079	Slide-out platform, rollerless. Includes chrome grab handle centered on the front face of the platform (includes hand rail as applicable for body mounted locations) and required step lighting. Located [#LOC].	$989
3330-0141	Access ladder with aluminum side rails and aluminum ribbed extruded steps for NFPA hosebed access and handrail mounted on upper hosebed side (as applicable). LED lighting provided and positioned to illuminate steps per NFPA. Ladder to be located [#LOC].	$1,237
3330-0165	Handrail 24". Location [#LOC].	$226
3330-0166	Handrail 12". Location: Mount on rear of truck at E-One discretion.	$125
3330-0167	Intermediate rear step to be approximately 10" deep located above the rear Newton dump valve, and be of embossed aluminum treadplate.	$620
3330-0168	Slide-out platform, rollerless. Includes chrome grab handle centered on the front face of the platform (includes hand rail as applicable). Located under right side pump running board.	$1,469
3330-0170	Slideout platform-roller-less. Includes chrome grab handle and retaining pin, centered on the front face of the platform (includes handrail as applicable for body mounted locations) and required step lighting. Located: [#LOC].	$989
3330-0198	Intermediate rear step to be approximately 10" deep located above the rear compartment and be of embossed aluminum treadplate.	$620

3330-0202	Intermediate rear step to be approximately 8" deep located at the rear panel and be constructed of embossed aluminum treadplate.	$537
3330-0209	Slide-out platform, rollerless. Includes chrome grab handle centered on the front face of the platform (includes hand rail as applicable). Located below tailboard centered and the step area the same width as the access ladder.	$1,469
3330-0210	Handrail 12". Install 12" handrails on the upper flat section above the speedlays for easier access to the top mount pump panel walkway.	$125
3330-0225	Folding Step. Step to be located 18" above surface of tailboard, and directly below drivers side rear vertical handrail.	$271
3340-0035	Divider Long. To run full length of hose bed (front to rear).	$549
3340-0062	Divider medium. To run full length of hose bed (front to rear) behind single fill tower.	$493
3340-0093	Mud flaps, rear, black with E-ONE logo.	$181
3340-0107	Diamond plate tandem axle wheel well. Includes bolt-on composite wheel well liners and fenderettes.	$2,484
3340-0145	Rub rail for the body and pump area module(s).	$836
3340-0319	Bolt-on diamond plate 10" tailboard (full width of body). For use with rear ladder application. Includes handrails- (1) vertical on trailing edge of body opposite side of ladder and handrail(s) horizontal below hosebed.	$1,002
3340-0408	Adjustable ladder brackets. Locate in adjustable track [#LOC].	$544
3340-0409	Adjustable tracks (pair). Locate tracks to [#LOC] assembly. For use with ladder and/or hard suction rack(s).	$214
3340-0494	Rubrail for the body.	$836
3340-0523	Hosebed area above booster tank. Includes raised sides and front of water tank, slatted flooring and adjustable divider extrusions.	$2,979
3340-0524	Hosebed area above booster tank. Includes raised sides and front of water tank, slatted flooring and adjustable divider extrusions.	$4,516
3340-0546	A bolt-on preconnect storage area to be provide to the driver side upper tank area. To include aluminum sides and front (notched for discharges), (2) dividers (notched for nozzle) with handhold cut-outs. Storage from driver to officer (double stacked) : 200' of 1.75" DJ/ 200' of 1.75" DJ/ 200' of 2.5" DJ. Storage area depth to be approximatley 8.75" deep to the dri-deck flooring.	$1,483
3340-0551	Diamond plate hose storage box located on driver side compartment top. Includes lift-up door for easy access from the ground. Tray to sized for 150' of 2.50" hose (deadlay).	$2,539
3340-0552	Double pre-connect tray on top of the drivers side compartment top offset to the rear. Tray to be "U" shape to hold 200' of 1.75" DJ (each). Includes hinged diamond plate cover.	$1,573
3340-0587	Slip-on stainless steel dump elbow and 36" straight extension chute. Includes body mounted removable support arm and mounting brackets at rear of body for elbow and straight chute.	$1,860
3340-0588	Slip-on painted steel dump elbow and 36" straight extension chute. Includes body mounted removable support arm and mounting brackets at rear of body for elbow and straight chute.	$1,436
3340-0604	Diamond plate hose storage box. Locate on driver side compartment top. Box to include removable flooring and a diamond plate drop down door with d-ring latch(s). Rubber stops will be provided ipo chains.	$1,573
3340-0608	Hosebed area above booster tank. Includes raised sides and front of water tank. No hosebed slats in hosebed.	$1,837
3340-0609	Guard Booster Reel. There shall be an expanded metal guard provided for booster reel mounted below body between frame rails to prevent booster reel hose from falling below the truck.	$611
3340-0610	Full width partition/channel located in hosebed rearward of the fill tower(s). Channel shall be approximately 6" wide x 2" high and located 106" from the rear of the truck. See photos on file.	$502
3340-0611	Body will have (2) additional compartments, (1) each side behind the rear wheels. Doors to match material of forward doors. Wetsides.	$1,382
3340-0612	Diamond plate shield over electrical items mounted on extended box at upper rear of Wetside tank.	$107
3340-0618	Captive booster reel rollers mounted through center rear compartment face. Locate down low and size for width of reel assembly.	$431
3340-0619	Body will have (2) additional compartments, located (1) each side behind rear wheels. Narrow tank Wetside only.	$245
3340-0620	Body will have (2) additional compartments, located (1) each side behind rear wheels. Wide tank Wetside only.	$245
3340-0624	Box mounted on driver side rear compartment face to hold auto eject rectacle and battery charger display. Box to be angled downward at an approximate 15 degree angle.	$284
3340-0634	Double pre-connect tray on top of the drivers side compartment top offset to the rear. Tray to be "U" shape to hold 200' of 1.75" DJ (each). Includes black vinyl cover.	$1,573
3340-0642	Body will have (2) additional compartments, (1) each side behind the rear wheels.	$844
3340-0643	Stainless steel trim for lower edge of rear mudflap (PR). The trim shall be 2" in height and go full width of the mudflap. The material shall be "polished" stainless steel and it will be mounted to the lower edge of the rear (back side) of the mudflaps.	$349
3340-0652	Stainless steel trim for lower edge of front mudflap (PR). The trim shall be 2" in height and go full width of the mudflap. The material shall be "polished" stainless steel and it will be mounted to the lower edge of the rear (back side) of the mudflaps.	$349
3340-0653	Diamond plate tandem axle wheel well. Includes bolt-on composite wheel well liners and bolt-on polished alum fenderettes.	$2,254
3340-0654	Sign plates made from smooth aluminum plate (PR), 12" X12", painted color: [#COL] shall be mounted to the diamond plate panel rearward of the rear tires each side.	$272
3340-0669	Rubrail for the body (sides only, serrated surface facing down).	$622
3340-0670	Double pre-connect tray on top of the drivers side compartment top offset to the rear. Tray to be "U" shape to hold 200' of 1.75" DJ (each). Includes cover to protect preconnects and hinged smooth plate cover for hose. Tray and covers to be painted job color.	$1,749
3340-0674	There shall be a metal plate mounted to the side of the driver side compartment top mounted preconnect tray to assist in the application of the NFPA stripe.	$187

3340-0678	Double pre-connect tray on top of the drivers side compartment top offset to the rear. Tray to be "U" shape to hold 200' of 1.75" DJ (each). Includes red vinyl cover.	$1,573
3340-0684	Body compartment interiors to have Zolatone gray finish. To include pan of hinged doors (as applicable). Does not include floors if they are dia plt. Wetside Only.	$1,467
3340-0700	Body will have (2) additional compartments, (1) each side behind the rear wheels below side dumps. Includes a vertically hinged diamond plate door with thumb latch.	$844
3340-0714	Bolt-in floor [#LOC]. Floor is in addition to the existing DP floor. Floor to have 2" raised forward area (tapered towards rear for securing cribbing) and run full length front to rear.	$246
3340-0720	Slip-on painted steel dump elbow and 36" straight extension chute. Includes body mounted removable support arm and mounting brackets in compartment [#LOC] for elbow and straight chute.	$1,436
3340-0724	Diamond plate tandem axle wheel well. Includes fenderettes and bolt-on aluminum wheel well liners painted job color.	$2,484
3340-0741	Rubrail for the body (sides only, serrated surface facing up).	$622
3340-0770	Hosebed area above booster tank. Includes raised sides and front of water tank, slatted flooring and adjustable divider extrusions. Hosebed walls to be 20" high (18" deep hosebed). Wetside only.	$5,873
3340-0777	Slip-on stainless steel dump elbow and 36" straight extension chute. Includes body mounted removable support arm and mounting brackets in compartment [#LOC] for elbow and straight chute.	$1,860
3340-0800	Notched hosebed divider(s). Notch to be in center approximately 32" up from floor and angle up 45 degrees at each end. See photo on file.	$462
3340-0829	Sign plate made from smooth aluminum plate (PR), 12" X 12", painted color: FLNA3225E-1 Red shall be mounted to the rear of body.	$137
3340-0831	Sign plates made from smooth aluminum plate (PR), 30" X 30", painted job color. They shall overlay the diamond plate panel rearward of the rear tires each side.	$438
3340-0837	Cover cast products AD0039-1 mounted over newton dump control switches on rear of body.	$226
3340-0880	Brushed stainless steel scuff plates for all body handrails.	$523
3340-0881	Sign plate holder made from smooth aluminum material, sized to be 12"w x 6"h, painted job color. Locate (1) at rear of truck, one (1) mounted on front bumper and (1) each side on L1/R1 in forward upper corner.	$547
3340-0895	Smooth plate tandem axle wheel well painted job color. Includes bolt-on composite wheel well liners and bolt-on polished alum fenderettes. Wheel well plates to be flush mounted.	$5,523
3340-0899	Storage sleeve officer side rear of tank. Sleeve to hold large road signs. Opening to be approx 16"W x 16"H x 44"D with 4 individual storage areas approximately 8"W x 8"H x 44"D (EA) seperated by dividers. Wetside.	$1,861
3340-0900	Single Hard Suction Rack to Hold a 2.5" or 3" Diameter Suction Hose.	$431
3340-0908	Slip-on stainless steel dump elbow and 36" straight extension chute. Includes body mounted removable support arm, mounting brackets at rear of body for elbow and brackets for straight chute in R2	$1,860
3340-0909	Divider Long Fixed. To run full length of hose bed (front to rear) positioned fixed as close to center of hosebed ROM roll up door drum center as hose loading permits..	$648
3340-0937	Tank sides to be raised 14" above booster tank. Includes raised sides and front of water tank. No hosebed slats to be installed.	$2,573
3340-0951	Hosebed area above booster tank. Includes raised sides and front of water tank, slatted flooring and adjustable divider extrusions. Hosebed walls to be 18" high (16" deep hosebed). Wetside only.	$5,873
3340-0975	Smooth plate painted tandem axle wheel well. Includes bolt-on composite wheel well liners and bolt-on polished alum fenderettes.	$3,416
3365-0183	Hard suction storage rack. Locate [#LOC]. Includes NFPA retaining strap(s).	$290
3365-0189	Manual drop-down portable tank storage rack. Includes forward and rearward securing clamps with manual releases. Locate rack to [#LOC] of body. Rack sized for steel framed [#COL] portable tank.	$2,045
3365-0230	Diamond plate storage area for up to (3) 5" x 10' hardsuction hoses (not included). Includes side facing access with a fixed forward panel, a side rearward swing door with mechanical latching (wired to door ajar) and (2) securing straps located inward front to rear. Storage to be located [#LOC]	$626
3365-0231	Diamond plate storage box for storage of a 2500 gallon portable water tank (not included). Includes drop down rear access door with push button latch (wired to door ajar). Box to be located [#LOC]	$626
3365-0233	Diamond plate storage area for a portable water storage tank (not included). Includes side facing access with a full width drop down door with mechanical latching (wired to door ajar). Storage located to [#LOC] of body. Sized for [#COL] steel frame portable tank.	$550
3365-0234	Diamond plate storage area for up to (3) 5" x 10' hardsuction hoses (not included). Includes rear facing access with a full width drop down door with mechanical latching (wired to door ajar). Storage to be located [#LOC]	$626
3365-0244	Pre-connect storage box with hinged full length lid. Includes center divider and storage for (2) 1.75" DJ hose (200' each) with black dri-deck flooring and red vinyl end flap with hold-downs.	$755
3365-0247	Horizontal ladder bracket installed on officer side of hosebed. Will include aluminum boot and ladder hold down. Ladder Compliment: [#LOC].	$287
3365-0270	Stainless steel scuff plate mounted full height of tank to protect paint from hard suction handles. Located at each end of hard suction hose.	$263
3365-0273	Horizontal ladder bracket installed on driver side of hosebed. Will include aluminum boot and ladder hold down. Ladder Compliment: [#LOC].	$287
3365-0275	Hard suction storage rack for (1) 6" X 14' suction hose. Locate [#LOC]. Includes NFPA retaining strap(s).	$441
3365-0294	There shall be a metal plate mounted to the side of the portable tank rack to assist in the application of the NFPA stripe.	$187
3365-0295	Manual drop down portable tank storage rack. Includes forward and rearward securing clamps with manual releases. Locate rack to [#LOC] of body. Rack sized for an aluminum framed [#COL] portable tank.	$2,045

3365-0315	Zico drop down rack to have smooth plate cover between outboard rack assemblies. Rack and cover to be painted job color, includes painting of the actuator covers.	$1,702
3365-0334	Ladder Storage Box. Located in the officer side hosebed. The top shall be enclosed using the hosebed cover, the rear access shall be included in the vinyl rear flap as part of the hose bed cover (hinged door not included), The hosebed cover and rear flap shall be sold separately. Box to hold (1) Alcolite PEL 24' 3-section, (1) Alcolite PRL 12' roof, (1) Alcolite FL 10' attic ladder, (2) backboards and (2) pike poles.	$3,038
3365-0357	Hard suction storage thru the tank for up to (3) 6" x 10' hard suction hoses. Tunnel located driver side of water tank stacked vertical. Wetside Tanker Only.	$4,292
3365-0358	Portable tank storage thru the tank to hold: (1) 2100 gallon portable tank. Tunnel located officer side of water tank vertically. Wetside Tanker Only.	$3,929
3365-0363	Hard suction storage rack. Locate:[#LOC]. Includes NFPA retaining strap(s). For use with 15' hard suction hose.	$567
3365-0378	Ladder Storage Box. Located in the officer side hosebed. The top shall be enclosed using hosebed style top. Includes drop down door (wired to door ajar) W/ D-ring latch. Box to hold (1) Alcolite FEL 24' 2-section, (1) Alcolite FRL 14' roof, (1) Alcolite FL 10' attic ladder and (5) 10' pike poles (NY hooks).	$3,038
3365-0385	Portable tank storage thru the tank to hold: (1) 3000 gallon portable tank. Tunnel located officer side of water tank vertically.Includes vertically hinged door wired to door ajar with push button latch. Wetside Tanker Only.	$3,929
3365-0386	Hard suction storage thru the tank for up to (3) 6" x 10' hard suction hoses. Tunnel located driver side of water tank stacked vertical. Includes vertical hinged door wired to door ajar with push button latch. Wetside Tanker Only.	$4,292
3365-0410	Ladder Storage Box. Located in the officer side hosebed. The top shall be enclosed using the hosebed cover, the rear access shall be equipped with an outboard vertical hinged door with thumb latch and moon spring hold open, The hosebed cover and rear flap shall be sold separately. Box to hold (1) Alcolite PEL 24' 3-section, (1) Alcolite PRL 12' roof with separete divider and (1) Model 13 Little Giant	$3,038
3365-0434	Ladder Storage Box. Located in the officer side hosebed. The top shall be enclosed using the hosebed cover, the rear access shall be equipped with an INBOARD, vertical hinged, door with thumb latch and moon spring hold open, The hosebed cover and rear flap shall be Sold Separately. Rear Flap does not cover rear ladder box door. Box to hold (1) Alcolite PEL 24' 3-section, (1) Alcolite PRL 12' roof with separete divider, (1) Model 13 Little Giant, (1) 6` Firehook model MPH-6 pike pole w/gas shut-off end, and (1) 8` Firehook model MPH-8 pike pole w/gas shut-off end.	$3,394
3365-0443	Hard suction storage rack for (1) 6" X 8' suction hose. Locate [#LOC]. Includes NFPA retaining strap(s).	$315
3365-0449	Storage in center forward area of hosebed for spare tire. Open top storage with hosebed cover to be enclose area.	$602
3365-0450	Triple hard suction storage rack. Officer side in ladder track. Includes NFPA restraining straps. Rack shall accommodate 3" hard suction hose.	$1,126
3365-0480	Hard suction storage in hosebed for the following: (2) 6" x 10' hard suction hoses. Includes (1) hosebed divider with squared off upper rear, vertically hinged (to swing outboard hosebed area) door with latch (wired to door ajar indicator) and composite material overlay on hosebed flooring. Upper area open and main hosebed cover to be used to cover top area of storage area. Storage located to officer side of hosebed.	$1,233
3365-0494	Zico electric drop down hardsuction rack. Rack located to driver of body. The control switching to be located on the side pump panel with the rack being in full view of the operator during operations. The rack includes (2) main rack mounted 12' trays.	$6,897
3365-0497	Portable tank storage thru the tank to hold: (1) 2100 gallon portable tank. Tunnel located driver side of water tank vertically. Tunnel to be 11" wide x 32" high. Includes a D-Ring style latch on access door. Wetside Tanker Only.	$3,929
3365-0499	Portable tank storage thru the tank to hold: (1) 2100 gallon portable tank. Tunnel located officer side of water tank vertically. Tunnel to be 11" wide x 32" high. Includes a D-Ring style latch on access door. Wetside Tanker Only.	$3,929
3370-0151	There shall be (3) vertical partitions located in R1 compartment. (1) spaced 10" off back wall, (1) 20" off back wall and (1) 30" off backwall. Forward of the partition shall be (1) adjustable shelf.	$1,201
3370-0173	Compartment R1 to have the following storage package: (1) vertical partition 24" off rearward wall and the following located forward of the partition: (1) adjustable shelf. Rearward of partition: (3) equally spaced permanent shelves.	$1,331
3370-0176	Compartment R1 to have the following storage package: (1) vertical partition 24" off rearward wall and the following located forward of the partition: (1) adjustable shelf. Rearward of partition: (3) adjustable shelves with inverted 1" lips.	$1,545
3380-0244	Fixed aluminum toolboard. Toolboard to be spaced off tank with mounting blocks. Locate above pump module mounted to tank, as large as possible. Includes tank mounting blocks.	$683
3380-0259	R1 shall have (1) vertical partition 24" off forward wall with (1) adjustable shelf rearward of the partition.	$1,715
3390-0387	Compartment L1 to have the following storage package: (1) vertical partition centered off forward wall and the following located forward of the partition: (1) adjustable mounted roll-out tray w/500lb slides. Rearward of partition: (1) adjustable shelf and (4) SCBA troughs, (2) SCBA troughs to be floor mounted and (2) on adjustable shelf equally spaced.	$2,781
4000	**Pumps/Tanks**	
4005-0013	Hale QFLO 750-1250 GPM pump, single stage.	$25,447
4005-0136	Hale MBP PTO driven pump. Includes driver side 5" intake with cap (shipped loose). Capacity of 750GPM/2839LPM. For use with Wetside Tanker only.	$16,402
4005-0144	Hale AP PTO driven pump. Includes driver side 5" intake with cap (shipped loose). Capacity of 500GPM/1892LPM. For use with Wetside Tanker only.	$14,488
4005-0145	Hale MBP PTO driven pump. Includes driver side 6" intake with cap (shipped loose). Capacity of 1000GPM/4000LPM. For use with Wetside Tanker only.	$17,095

4005-0146	Hale MBP PTO driven pump for use with under tank mounting. Includes driver side 5" intake with cap (shipped loose). Capacity of 750GPM/2839LPM. For use with Wetside Tanker only.	$16,402
4005-0157	Waterous CL PTO driven pump. Includes driver side 5" intake with cap (shipped loose). Capacity of 500GPM/1892LPM. For use with Wetside Tanker only.	$15,209
4005-0171	Waterous CXVK 750-1250 single stage PTO Pump. On 4X4 commercials, requires PTO on top port of the transmission.	$26,611
4005-0177	Hale APH 500gpm HYD driven pump. Includes driver side 5" intake with cap (shipped loose). Capacity of 500GPM/1892LPM. For use with Wetside Tanker only.	$25,079
4010-0134	3000 gallon wide Wetside water tank. Tank capacity is 3000 US gallons / 2498 Imperial gallons / 11356 Liters. For use with single rear tank dump.	$14,903
4010-0135	2000 Gallon wide Wetside water tank. Tank capacity is 2000 US gallons / 1665 Imperial gallons / 7570 Liters.	$23,501
4010-0137	3000 gallon narrow Wetside water tank. Includes offset forward officer side integral SCBA storage compartment. Tank capacity with compartment is 3000 US gallons / 2498 Imperial gallons / 11356 Liters.	$15,437
4010-0139	3000 gallon narrow Wetside water tank. Tank capacity is 3000 US gallons / 2498 Imperial gallons / 11356 Liters. For use with single rear tank dump.	$16,086
4010-0142	3000 gallon narrow Wetside water tank for 6X6 chassis. Tank capacity is 3000 US gallons / 2498 Imperial gallons / 11356 Liters. For use with single rear tank dump.	$16,086
4010-0151	Tank 3000 gallon Wetside. Note: Any foam cell(s) in tank will reduce the overall water capacity. Tank capacity is 3000 US gallons / 2498 Imperial gallons / 11356 Liters.	$27,005
4010-0153	Tank 2000 gallon Wetside. Note: Any foam cell(s) in tank will reduce the overall water capacity. Tank capacity is 2000 US gallons / 1665 Imperial gallons / 7571 Liters.	$19,416
4010-0229	Tank 3500 gallon Wetside. Note: Any foam cell(s) and/or storage options in tank will reduce the overall water capacity. Tank capacity is 3500 US gallons / 2914 Imperial gallons / 13248 Liters.	$29,892
4010-0254	Tank 2800 gallon Wetside. Note: Any foam cell(s) in tank will reduce the overall water capacity. Tank capacity is 2800 US gallons / 2331 Imperial gallons / 10600 Liters.	$27,005
4010-0264	Tank 2750 gallon Wetside. Note: Any foam cell(s) in tank will reduce the overall water capacity. Tank capacity is 2750 US gallons / 2289 Imperial gallons / 10409 Liters.	$27,005
4010-0268	Tank 2030 gallon Wetside. Note: Any foam cell(s) in tank will reduce the overall water capacity. Tank capacity is 2030 US gallons / 1690 Imperial gallons / 7685 Liters.	$21,358
4010-0273	Tank 3030 gallon Wetside. Note: Any foam cell(s) in tank will reduce the overall water capacity. Tank capacity is 3030 US gallons / 2523 Imperial gallons / 11470 Liters.	$29,705
4015-0007	Pump cooler, 1/4" valve with 3/8" tubing.	$182
4015-0018	Valve Inlet MIV-E - Hale. Location: [#LOC].	$3,735
4015-0142	Pump&Roll kit. To include Digital Master pressure gauge. Mini tank level, Tank to pump control, Switches in cab, and Preset discharge pressure relief valve.	$3,233
4015-0159	Valve Inlet MIV-E - Hale. Location: [#LOC].	$3,735
4015-0164	Factory Pump Test.	$513
4015-0166	Pump cooler, automatic with 3/8" tubing. Include a check valve that is install between the pump discharge and tank that will automatically close when drafting.	$157
4015-0175	Additional control and air bleeder for the MIV-E to provide controls at: [#LOC].	$601
4015-0183	Test Port 1/4" Drain Valve.	$87
4015-0199	Pump&Roll kit. To include Digital Master pressure gauge. Mini tank level, Tank to pump control, Switches in cab, and Preset hydraulic flow control valve.	$3,233
4015-0204	Trident Manually operated master pump drain. The master drain shall be clearly marked and placed in accessible location on pump panel.	$177
4020-0004	Newton dump mounting plate.	$610
4020-0019	Rear tank dump. Includes stainless steel assembly with manually actuated valve on top of dump assembly. For use with slip on extension and chute.	$1,800
4020-0022	Rear tank dump. Includes stainless steel assembly with manually actuated valve on top of dump assembly. Includes integral swivel chute with manual extension.	$5,365
4020-0039	Rear tank dump. Includes painted steel assembly with electric actuated valve and integral electric extension chute.	$3,953
4020-0043	Slip-on mild finish dump extension and chute. Includes (1) rear body mounted removable support arm bracket and tailboard mounted storage tray (lower step directly below dump) with retaining straps.	$1,476
4020-0044	Slip-on stainless steel dump extension and chute. Includes body mounted removable support arm bracket and tailboard mounted storage tray (opposite side of NFPA upper access step/ladder) with retaining straps.	$1,908
4020-0048	Recessed SCBA storage compartment located officer side of tank offset forward of fold-a-tank rack. Storage compartment shall be equipped with aluminum smooth plate double doors painted job color with drip rail. Interior will include tracking on side and rear walls for mounting of equipment.	$749
4020-0051	Speedlay provision in tank. Located at front of tank to accomodate (2) hose trays. Includes provision for plumbing to be located on driver side above trays. Trays to hold 200' of 1.75" DJ. Wetside only.	$1,842
4020-0052	Hosebed partition "L" shape. Locate at rear of hosebed, centered side to side, extend 106" forward and taper at 90 degrees to driver hosebed side wall. Partition to be poly and integral to the tank. See photos on file.	$723
4020-0053	Tank sump box (1) each side of tank for newton dump mounting. Wetside Tanker Only.	$695
4020-0054	Rear tank dump. Includes painted steel assembly with electric actuated valve on top of dump assembly. Includes integral swivel chute with manual extension.	$5,408
4020-0055	Switch guard half moon. Locate on electrical Newton dump and Newton dump ext chute switches.	$32
4020-0058	Recessed SCBA storage compartment located driver side of tank offset forward. Recess will include tracking on side and rear walls for mounting of equipment. Does not include door. Wetside Only.	$594
4020-0059	Rear tank dump. Includes painted steel assembly with electrically actuated valve. For use with slip on extension and chute.	$2,101

4020-0060	Tank sump box (1) each side centered above rear wheels for newton dump mounting. Wetside Tanker Only.	$695
4020-0061	Recessed SCBA storage compartment located officer side of tank offset forward. Recess will include tracking on side and rear walls for mounting of equipment. Does not include door. Wetside Only.	$594
4020-0068	The Newton mounting plate shall be fitted with a stainless steel plate to cap the tank until the dealer supplied dump has been installed.	$297
4020-0071	Tank sleeve for hosebed discharge(s). Wetside Tanker.	$819
4020-0080	Wire raceway/conduit at rear of tank, internal. Electrical wiring at rear of tank shall be run inside the tank in place of standard.	$935
4020-0081	There shall be no exposed wiring conduits on the exterior of the tank. All the wiring shall be run through inside the tank.	$1,129
4100-0057	20 gallon external foam tank for [#LOC] locate: Officer side front of body. UPF Poly III [#COL] fill tower. A diamond plate cover will be provided around the foam tank.	$3,254
4405-0091	Booster reel skid plate. For use with booster reel mounted between frame rails.	$507
4405-0099	Booster Reel. Reel to have capacity of 200' of 1" (not included). Locate under rear body. Includes electric rewind foot switch offset to the officer side of B1 compartment.	$3,183
4405-0128	Booster Reel. Reel to have capacity of 200' of 1" (not included). Locate under rear body (includes support brkts). Includes rewind switch.	$4,650
4415-0012	1.5" crosslay with Akron manual valve. Location: [#LOC].	$1,066
4415-0014	2.5" Left Pump Panel Discharge Akron Manual Valve. Location: [#LOC].	$1,111
4415-0016	2.5" Right Pump Panel Discharge Akron Manual Valve. Location: [#LOC].	$1,234
4415-0028	2.5" Right Rear Discharge Akron Manual Valve. Location: [#LOC].	$1,299
4415-0041	3" Deck Gun Discharge, Akron manual valve.	$1,821
4415-0161	2.5" Left Panel Discharge Akron Manual Valve w/30 Degree Chrome Droop. Location: [#LOC].	$1,395
4415-0164	2.5" Right Panel Discharge Akron Manual Valve w/30 Degree Chrome Droop. Location: [#LOC].	$1,395
4415-0165	3" Right Panel Discharge Akron Manual Valve w/30 Degree Chrome Droop. (Waterous pumps noted if location is forward of steamer use lower discharge port.) Location: [#LOC].	$2,132
4415-0872	Pair of 1.5" preconnect discharges with Akron manual valves. For use with Wetside tank with upper tank/hosebed pre-connect storage. All exposed piping along forward area of tank to be painted black. Plumbing to terminate with 1.5" MNST threads to the driver side of the tank/hosebed.	$2,511
4415-0873	Provide a 1.5" port connection (with removable cap) on the main manifold for use with a dealer installed ground spray system. Dealer will make all required connections and controller applications.	$189
4415-0875	Pair of 1.5" preconnect discharges with Akron manual valves. For use with narrow Wetside tank with driver side compartment top pre-connect storage. Plumbing to terminate with 1.5" MNST threads.	$2,433
4415-0925	All Discharge/Intake caps, and plug to be Kochek brand and Powder coated. Color; White.	$651
4415-0938	2.5" Left Pump Panel Discharge Akron Manual Valve. The discharge shall extend out beyond the pump panel w/Chrome plated finish. Location: [#LOC].	$1,253
4415-0939	2.5" Right Pump Panel Discharge Akron Manual Valve. The discharge shall extend out beyond the pump panel w/Chrome plated finish. Location: [#LOC].	$1,253
4415-0967	1.5" Crosslay w/2.5" Akron Manual Valve and plumbing. Include 2.5" FNST X 1.5" MNST adapter. Location: [#LOC].	$1,301
4415-1036	2.5" Right Pump Panel Discharge Akron Manual Valve to be used with Wetside - under tank design only. Location: [#LOC].	$2,468
4415-1045	Preconnect extension (Each). The front hosebed preconnect to be extended to the rear of the hosebed area. Includes smooth plate cover. Location: second officer side hose bed preconnect is to treminate approx 10" from back edge of hosebed.	$444
4417-0138	Officer side pump panel shall have polished stainless steel split escutcheon plates mounted in place for each discharge/intake. The escutcheon plates will be fastened in place to allow quick disassembly to permit the hinge to operate.	$265
4417-0158	Deck Gun Discharge piping shall be extended flush with top of booster reels.	$284
4417-0193	Extend Driver Hosebed up 16" from hosebed floor.	$446
4430-0091	FoamPro 1600 Foam System. Provides foam for (2) 1.5" Double Crosslay, and Booster Reel. Include FoamPro Remote start control in cab center console. Locate foam system in the L1 compartment on the shelf.	$15,215
4435-0001	Class 1 Intelli-Tank water tank level gauge. On pump panel.	$533
4435-0015	2.5" Class 1 compound pressure gauge (30-0-600). Discharge(s): [#LOC].	$152
4435-0047	Class 1 Intelli-Tank water tank level gauge, additional. Location: [#LOC].	$613
4435-0092	2.5" Class 1 compound pressure gauge (30-0-400). Discharge: [#LOC].	$152
4435-0094	Class 1 4-1/2" compound pressure gauge (30-0-400 PSI).	$211
4435-0189	Class 1/Whelen PSTank water tank level gauge package. Includes ITL-40M on pump operator's panel, mini gauge in cab and (3) Whelen PSTANK lights. Location of Whelen PSTANK lights: (1) driver side up high on tank offset forward of scene light, (1) officer side up high on tank offset forward of scene light and (1) at rear up high.	$2,870
4435-0193	2.5" Class 1 compound pressure gauge (0-400). Discharge: [#LOC].	$152
4435-0200	2.5" Class 1 pressure gauge (0-600). Discharge: [#LOC].	$147
4435-0207	Class 1/Whelen PSTank water tank level gauge package. Includes ITL-40M on pump operator's panel, and (3) Whelen PSTANK lights. Location of Whelen PSTANK lights: (1) driver side up high on tank offset in front of forward scene light, (1) officer side up high on tank offset in front of forward scene light and (1) at rear up high.	$2,304
4435-0215	Class 1 4-1/2" compound pressure gauge (30-0-400 PSI). Locate Auto Fill Inlet.	$211
4435-0216	Class 1 Intelli-Tank water tank level gauge mounted on the rear of the body. Optimize mounting position on rear body using space not allocated by other equipment unless otherwise specified.	$533
4435-0226	DEF level gauge on pump operator's panel.	$376
4435-0243	4" Innovative Controls Brass Case Nite-Glo Master Pressure Gauges with Bezel. Intake 30-0-400, and Discharge 0-400.	$961
4435-0244	2.5" Innovative Controls brass case pressure gauge (0-400) with color code bezel.	$175

4435-0246	2.5" Innovative Controls stainless steel case pressure gauge (0-400) with color code bezel.	$153
4435-0247	4" Innovative Controls stainless steel case master pressure gauges with bezel. Intake 30-0-400, and discharge 0-400.	$435
4435-0248	2.5" Innovative Controls stainless steel case dual read pressure gauge (0-2750KPA/0-400PSI) with color code bezel.	$153
4435-0249	4" Innovative Controls stainless steel case master pressure gauges with bezel. Intake 30-0-400, and discharge 0-400, dual read KPA/PSI.	$435
4435-0250	2.5" Innovative Controls brass case pressure gauge (0-400) with color code bezel.	$175
4435-0254	4" Innovative Controls brass case master pressure gauges with bezel. Intake 30-0-400, and discharge 0-400.	$648
4435-0255	4" Innovative Controls brass case master pressure gauges with bezel. Intake 30-0-400, and discharge 0-400, dual read KPA/PSI.	$638
4435-0258	Addition 4" Innovative Controls stainless steel case master pressure gauges 0-400. Locate driver side pump panel.	$251
4435-0259	Innovative Controls/Whelen PSTank water tank level gauge package. Includes IC10 gauge on pump operator's panel, mini gauge in cab and (3) Whelen PSTank lights. Location of Whelen PSTank lights: (1) driver side up high on tank offset forward of scene light, (1) officer side up high on tank offset forward of scene light and (1) at rear up high.	$2,862
4435-0260	Innovative Controls/Whelen PSTank water tank level gauge package. Includes IC10 gauge on pump operator's panel, and (3) Whelen PSTank lights. Location of Whelen PSTank lights: (1) driver side up high on tank offset in front of forward scene light, (1) officer side up high on tank offset in front of forward scene light and (1) at rear up high.	$2,304
4435-0261	4" Innovative Controls stainless steel case master pressure gauges with bezel. Intake 30-0-400, and duplex discharge 0-400 for CAFS and Industrial applications.	$1,471
4435-0262	2.5" Innovative Controls Nite-Glo brass case pressure gauge (0-400) and color code bezel with blue light gauge illumination.	$348
4435-0263	2.5" Innovative Controls Nite-Glo brass case pressure gauge (0-400) and color code bezel with red light gauge illumination.	$348
4435-0264	FRC TankVision/FRC Maxvision water tank level gauge package. Location of FRC Maxvision Strip-Lights: each side of cab towards rear	$2,808
4435-0266	2.5" Innovative Controls Nite-Glo brass case pressure gauge (0-400) and color code bezel with white light gauge illumination.	$348
4440-0005	2.5" Left Intake Akron Manual Valve.	$1,208
4440-0006	2.5" Right intake Akron manual valve.	$1,208
4440-0138	2.5" right intake Akron manual valve with chrome plated end.	$1,261
4440-0140	2.5" right intake Akron manual valve, located rear of steamer IPO standard location.	$1,208
4440-0146	Aux 2.5" foam system intake with swing handle. Locate to be [#LOC].	$1,208
4445-0009	Intake relief valve, Akron.	$502
4445-0056	Storz Connector 5" FNPT x 4" Storz 30 Degree Elbow with Tethered Cap For Rear Intake.	$485
4445-0065	Intake adapter 5" FNPT x 6" MNST for pump inlet (IPOS).	$171
4450-0011	2.5" tank fill Akron manual valve. At pump panel.	$1,286
4450-0105	3" Tank Fill Akron Manual Valve	$1,691
4450-0119	3" tank to pump Akron manual valve w/4" tank connection.	$1,289
4450-0121	3" Tank to pump Akron air actuated valve w/4" tank connection.	$1,771
4450-0149	2.5" rear direct tank fill. Includes swing handle control, swivel with droop and cap with retainer. Located to [#LOC] of the rear body.	$1,341
4450-0165	3" rear direct tank fill. Includes swing handle control, swivel with droop and plug with retainer. Located to [#LOC] of the rear body.	$1,570
4450-0169	4" rear direct tank fill. Includes handwheel control, with 5" Swivel Storz elbow and cap. Located to [#LOC] off rear of body	$3,260
4450-0171	2.5" rear direct tank fill. The 2.5" direct water tank fill connection shall include an inlet strainer, a 2.5" FNST chrome inlet swivel, w/double male nst adapter and a chrome cap with cable. [#LOC] of the rear body.	$1,341
4450-0172	4" Direct Tank Inlet/Outlet w/4" Elect Valve. Include 4" plumbing, strainer and terminate with 4"FNST X 5" storz adapter w/cap. Location at left side pump panel.	$4,599
4450-0192	Rear tank dump. Includes stainless steel assembly with electrically actuated 1070 dump valve. Includes integral swivel chute with manual extension.	$7,503
4450-0195	Rear tank dump. Includes stainless steel assembly with manually actuated valve on top of dump assembly with quick release pin to allow for folding down handle. Includes integral swivel chute with manual extension.	$5,364
4450-0199	Reverse push/pull handle on 3" tank to pump Akron manual valve. The "in" position will be open and the "out" position will be closed.	$60
4450-0228	Rear tank dump. Includes stainless steel assembly with manually actuated valve on top of dump assembly. Includes integral 6012 swivel chute with manual telescopic extension and with locking system.	$5,951
4450-0234	3" Tank to Pump. Includes Akron manual valve with controller located in body R1 compartment. Valve to terminate in a 3 inch Storz suction fitting. Locate valve center 9-1/2 inches above floor and 6 inches forward of rear door opening. Storz end should be just behind door when closed.	$1,559
4450-0239	Direct 2.5" water tank fill with Akron valve. Location: Officer side rear of steamerl. Control at pump operator panel.	$1,610
4450-0241	4" rear direct tank fill. Includes handwheel control, with 4" Swivel Storz elbow and cap. Located to officer's side off rear of body	$3,260
4450-0242	6" Rear Gravity Dump with 6" manual hand wheel control valve to terminate with 6" MNST connection with cap..	$5,292
4450-0244	3" Tank To Pump outlet, and 2" Tank Fill inlet shall be cap off at tank for Dealer install portable pump.	$159
4460-0067	Officer side pump panel shall include an access door to provide access to the cab tilt switch and manual jack as mounted.	$213

4460-0078	Pump panel tags, special color. #1 -Red Crosslay #2 -Yellow 2" tank fill- Black 3" tank to pump- Black 2.5" Left Intake - Black 2.5 Left rear dis -Blue 3" Deck Gun - Grey 2.5 Left Dis - Pink 2.5 Right Dis- Green 4" Right Dis- Purple.	$346
4465-0011	Class 1 TPG pressure governor. Includes, water, oil, volt and tachometer.	$2,448
4465-0020	Class 1 TPG Plus pressure governor. Includes master intake and discharge gauges, water, oil, volt and tachometer.	$3,269
4465-0028	Class 1 Sentry pressure governor/ Twister throttle. Includes master intake and discharge gauges, water, oil, tran, volt and tachometer.	$3,141
4475-0000	Pump certification 750-2250 GPM	$2,815
5000	**Electrical**	
5010-0002	Multiplex electrical system for pumper / tanker / rescue.	$3,802
5010-0014	Vehicle data recorder for commercial cab - 2009 NFPA compliant. Includes occupant detection with display. Display location: [#LOC].	$1,612
5010-0053	Vehicle data recorder for commercial cab - 2009 NFPA compliant. Includes occupant detection shown in multiplex display.	$1,032
5010-0056	Mounting arm for driver's multiplex display in cab (6").	$241
5010-0059	VFD Text display for V-MUX electrical system. Location: [#LOC].	$864
5010-0073	Vista IV touch screen DIN mount display for V-MUX electrical system recessed in dash. Does not include any tactile switches. Commercial chassis only.	$1,996
5010-0074	Special programming for multiplex color display (per hour). Requires engineering review and approval to determine feasibility and time.	$58
5010-0075	Vista display to have a customized sticker for legend buttons (Reference info in file for new configuration). May require special programming fee.	$578
5010-0076	Vista display to have a non-standard sticker for legend buttons (Reference info in file for existing but non-standard configuration). May require special programming fee.	$110
5010-0079	Vista display translated to French.	$765
5100-0036	Additional programming instructions: [#LOC].	$135
5100-0077	Switch, additional 12 volt/15 amp (PR). Location and function: Center console labeled "Left Nozzle" and "Right Nozzle" for use with dealer installed ground spray system. Dealer to make all fianl connections and functional testing of switching.	$248
5100-0130	Weatherproof Eaton rocker switches on pump panel ipo toggle switches.	$249
5110-0017	Back-up alarm 97 dB.	$112
5110-0149	Generator power shall be supplied to the command desk area. One (1) 12/3 cable shall supply 20 amps with 10' of wire coiled at the command desk area. The wires shall be clearly marked to identify them as 110V/20A generator power.	$381
5110-0150	Shoreline power shall be supplied to the command desk area. One (1) 12/3 cable shall supply 20 amps with 10' of wire coiled at the command desk area. The wires shall be clearly marked to identify them as 110V/20A shoreline power.	$381
5110-0168	Relocate ladder climbing light to side of diamond plate light shield. Westside only.	$188
5110-0169	Aluminum smooth plate cover for foam controller shall be located on back of controller.	$220
5150-0017	License plate light LED with chrome housing located at the rear of the body.	$149
5150-0022	Marker light LED body package. Commercial pumper bodies only.	$878
5150-0023	Weldon Model 1010 LED / incandescent tail lights. Includes red LED stop/tail, amber LED turn and clear incandescent back-up.	$603
5150-0032	Bracket license plate at rear of body.	$43
5150-0050	Zico backing lights (PR) with polished stainless steel housing model ZQL-SS-H7614. Location: [#LOC].	$672
5150-0111	Weldon Model 7" 1010 red LED stop/tail, amber LED turn and clear LED (9186-5586) back-up.	$899
5150-0112	Marker light package .75" Dia LED TecNiq. Commercial pumper and Wetside tanker bodies only.	$485
5150-0130	License plate light LED with chrome housing located at the rear of the body driver side down low.	$149
5150-0133	License plate light LED with chrome housing located at the rear of the body below B1 entry door.	$149
5150-0134	License plate light incandescent with chrome housing located at the rear of the body.	$149
5150-0148	Bracket license plate at rear of body. Fabricated from .125" smooth plate aluminum painted job color.	$53
5150-0149	License plate light incandescent with chrome housing located at the rear of the body below tailboard.	$61
5300-0092	Light bar Whelen Freedom model FN55QLED 55" LED with takedown lights and MKEZ7 mounts. Location: Centered on the front cab roof.	$4,166
5300-0240	Whelen Justice model JE2NFPA 56" with MKEZ7 mounts. All LED (forward facing) light bar.	$714
5300-0305	Light bar Whelen Freedom model FN55QLED 55" LED with driver red/officer blue LEDS, takedown lights and MKEZ7 mounts. Location: Centered on the front cab roof.	$4,166
5300-0329	Light bar Whelen Freedom model FN55QLED 55" LED with driver red/officer blue LEDS, takedown lights and MKEZ7 mounts. Location: Centered on the front cab roof.	$4,166
5300-0341	Whelen Justice model JE2NFPA 56" with MKEZ7 mounts. All LED (forward facing) light bar.	$714
5300-0401	Light bar Whelen Freedom 72" LED with MKEZ7 mounts and clear lenses. Includes (6) Rota-Beam LED (4-red, 2-white), (2) green LED, (2) red LED, (2) dual LR11 alley lights, (2) LR11 take down lights and GTT 795H Opticom. N/A INTL Chassis. Location: Centered on the front cab roof.	$7,733
5300-0409	Light bar Whelen Freedom model FN55QLED 55" LED with MKEZ7 mounts. Location: Centered on the front cab roof.	$3,608
5300-0411	Light bar Whelen Freedom model FN82QLED 82" LED with clear lenses, Opticom and MKEZ7 mounts. Includes (12) red LED and (2) white LED. N/A INTL Chassis. Location: Centered on the front cab roof.	$7,130
5300-0412	Light bar Federal Signal Legend 70" LED with red/white diodes and clear lenses. Location: Centered on the front cab roof.	$4,517
5300-0421	Light bar Whelen Freedom 72" LED with MKEZ7 mounts and clear lenses. Includes (8) red Rota-Beam LED and GTT 795H Opticom. N/A INTL Chassis. Location: Centered on the front cab roof.	$7,284
5300-0424	Light bar Whelen Freedom 72" LED with MKEZ7 mounts and red/clear lenses. Includes (8) red Rota-Beam LED and GTT 795H Opticom. N/A INTL Chassis. Location: Centered on the front cab roof.	$7,284

5300-0435	Light bar Federal Signal LPX61DS-NFPA 61" LED with red and clear lenses. Location: Centered on the front cab roof	$2,227
5300-0441	Light bar Whelen Freedom model FN88VLED 88" LED with MKEZ7 mounts and clear lenses. Includes (10) red, (6) white LEDs and (2) dual LR11 alley lights. N/A commercial Chassis. Location: Centered on the front cab roof	$6,992
5300-0447	Light bar Federal Signal LPX 53" LED with red/clear/blue lenses, red diodes outer driver, clear diodes center and blue diodes outer officer. Location: Centered on the front cab roof	$2,083
5350-0001	Camera back-up Safety Vision LCD model SV-CLCD70BA-625B with audio. For use with up to 2 cameras.	$2,282
5350-0060	Diamond plate camera shield.	$234
5350-0158	Camera back-up Safety Vision LCD model SV-CLCD70B-625B with audio. Located in cab dash on bracket (see photos).	$2,282
5350-0169	Camera back-up Safety Vision LCD model SV-CLCD-64-810 with lens shutter that opens when the unit is put in reverse.	$2,361
5350-0181	Camera back-up Safety Vision LCD model SV-CLCD70BA-620A with audio. For use with up to 2 cameras.	$2,450
5350-0192	Safety Vision back-up camera wired through multiplex display. Video displays automatically when transmission is in reverse. Camera only - does not include monitor.	$999
5350-0269	Camera system Voyager model AOM713WP 7" waterproof monitor with VCMS10B camera located on officer side pump module up high. Monitor located on pump operator panel.	$1,365
5350-0287	Brushed stainless steel camera shield.	$270
5380-0008	Compartment light package incandescent for small bodies.	$557
5380-0011	Compartment light package LED for small bodies.	$1,980
5380-0027	Ground light package for cab and body - small.	$516
5380-0030	Ground light package LED - small.	$1,686
5380-0200	Ground light package EON LED - small.	$960
5380-0201	Ground light package EON LED - medium.	$1,188
5380-0205	Cab step lighting package. Includes (2) EON LED lights per side.	$263
5380-0206	Cab step lighting package. Includes (4) EON LED lights per side.	$523
5380-0235	Ground light package Amdor Luma Bar H2O LED - small.	$1,037
5380-0236	Additional LumaBar H20 LED ground light (EA). Location: Below [#LOC].	$179
5380-0255	Compartment light package ROM V4 LED (2) for Wetside tanker. Includes one 12" light per compartment.	$287
5380-0256	Compartment light package ROM V4 LED (4) for Wetside tanker with optional rear side compartments. Includes one 12" light per compartment.	$571
5380-0266	Whelen PELCC lights LED (PR). Wired through work light switch. Location: [#LOC].	$671
5390-0000	Deck light - Unity 12 volt (PR). Location: [#LOC].	$408
5390-0001	Hose bed light Unity. Locate at front area of hose bed. Switched with work light switch in cab.	$198
5390-0003	Hose bed light Truck-Lite. Locate at the front area of the hose bed. Switched with work light switch in cab.	$119
5390-0007	Deck/scene light circuit wiring through chassis reverse. Requires rear deck or scene light.	$86
5390-0008	Federal Signal GH scene lights (PR). Switch in cab (driver and officer side facing lights switched separately). Locate [#LOC].	$480
5390-0022	Crosslay light Truck-Lite. Locate to rear of crosslay (SM) and forward of crosslay (TM as applicable). Switched with work light switch in cab.	$119
5390-0024	Deck Light - Truck-Lite (PR). Location: [#LOC].	$353
5390-0115	Whelen 600 series gradient Super-LED scene lights (6). Switch in cab (driver and officer side lights switched separately). Lights located (2) each side of body up high (offset forward and rearward) and (2) at rear of body up high. Wetside only.	$2,210
5390-0132	Warning light Federal Signal QL64-BACKUP (PR) white with clear lens. Surface mounted with bezel. Location: [#LOC]	$676
5390-0133	Deck lights - Unity 12 volt LED spot (PR). Location: [#LOC].	$1,114
5390-0134	Whelen M9 series Super-LED scene lights (6). Switch in cab (driver and officer side lights switched separately). Lights located (2) each side of body up high (offset forward and rearward) and (2) at rear of body up high. Wetside only.	$4,039
5390-0144	Unity deck light with model TP-1-I internal pull-up pole. Includes switch on lighthead and driver side overhead console. Location: [#LOC].	$654
5390-0154	Weldon model 3010-2600-30 scene lights (PR) with diamond plate mounting box. Switch in cab (driver and officer side facing lights switched separately). Locate [#LOC].	$825
5390-0169	Deck light FireTech, model FT-WL3500-60 LED (PR). Switched with work light switch in cab. Location: [#LOC].	$845
5390-0182	Crosslay light Amdor H2O. Locate at the front body above crosslay. Switched with work light switch in cab.	$529
5390-0188	Diamond plate mounting boxes (4). For use with scene lights and/or warning lights. Locate on driver and officer side forward and rearward compartment tops outboard; boxes to be full depth of compartment top.	$957
5400-0003	Engine compartment light (EA).	$140
5400-0005	Pump panel LED light package with (2) Whelen strip lights per side pump panel. Not available on panels over 45" wide. Side mount only.	$878
5400-0010	Incandescent pump compartment light (EA).	$151
5400-0011	LED pump compartment light (EA).	$405
5400-0031	Pair of Cab Dome Large Lights mounted driver and officer side front. N/A on E-One Chassis. Required on Comm Chassis.	$83
5400-0047	Pump panel light package with (3) lights per side pump panel. Pump panels over 45" may require additional lights. Side mount only.	$708
5400-0141	Under mount side mount pump panel LED lighting. Includes (3) pump panel lights.	$335
5400-0142	Under mount side mount pump panel LED lighting. Includes (4) pump panel lights (3 driver and 1 officer).	$446

5400-0143	Pump panel LED light package for side mount. Includes (3) TecNiq EON lights with S/S housings. Includes S/S light shield. Wetside only.	$335
5400-0145	Pair of Cab Dome Large Lights mounted driver (clear) and officer (red) side front. N/A on E-One Chassis. Required on Comm Chassis.	$83
5400-0150	Pump panel LED light package for side mount. Includes (6) Tecniq EON lights with S/S housings located (3) ea side. Includes S/S light shields.	$420
5400-0151	Pump compartment light EON LED. Wired to work light.	$242
5400-0152	Pump compartment light EON LED. Includes switch on pump operator's panel.	$242
5400-0153	Right side discharge panel LED light Tecniq EON with S/S housing. Wetside only.	$71
5400-0160	Pump panel LED light package for side mount. Includes (3) Tecniq EON lights with S/S housings. Includes Zolatone black light shield. Wetside only.	$335
5400-0165	Pump compartment light EON LED. Light shall be switched from the cab dash with the work light switch.	$242
5400-0168	Whelen LED pump compartment light (EA).	$307
5400-0169	Pump panel LED light package for top mount. Includes (10) Tecniq EON lights with S/S housings located (3) ea side and (4) for top mount panel. Includes S/S light shields.	$711
5400-0170	Compartment light EON LED. Includes activation switch. Location of light and switch: [#LOC].	$242
5400-0175	Compartment light EON blue LED. Switched with work light switch in cab. Location of light: [#LOC].	$242
5400-0181	Pump panel LED light package for side mount. Includes (6) Tecniq EON lights with S/S housings located (3) ea side. The center light shall be green as wired to activate when pump shift is placed in pump. Includes S/S light shields. Requires separate pump panel light wiring instruction.	$420
5400-0199	Pump panel light additional EON LED. Locate (2) driver side up high and (2) officer side up high.	$129
5450-0144	Fire Research Evolution 12V LED scene light model FCA530-V15-SW-H with external push-up pole. Includes switch in cab accessible to driver. Location: [#LOC].	$2,563
5450-0157	Quartz light Fire Research Optimum 150W/12V model OPA530-HD15-SR-SW with side mount external pole. Includes individual switch in cab on center console. Location(s): [#LOC]	$2,281
5450-0160	Quartz light Fire Research Focus 300W/12V model FCA530-D30-SR-SW with side mount external pole. Includes switch accessible to driver. Location(s): driver and officer side, (1) each side on body offset forward.	$1,795
5450-0194	Light Whelen Pioneer model PCP2 with PBA203 recess mount. Includes switch in cab accessible to driver (driver and officer side facing lights switched separately). Location: [#LOC].	$2,452
5450-0271	Akron SceneStar 120V LED model ELSS-XLAC-SM2-PS-UI-TL. Location: [#LOC].	$2,502
5450-0319	Akron SceneStar 12V LED model ELSS-XLDC-SM2-PS-UI-TL. Includes switch accessible to driver. Location: [#LOC].	$2,502
5450-0324	Light Whelen Pioneer model PCP2 powder coated black with PBA203 recess mount in fabricated diamond plate boxes. Includes switch in cab (driver and officer side facing lights switched separately). Location: [#LOC].	$2,645
5450-0325	Light Whelen Pioneer model PCP2 with chrome surface mount. Includes switch in cab accessible to driver (driver and officer side facing lights switched separately). Location: [#LOC].	$2,174
5450-0330	Diamond plate mounting boxes (4). For use with scene lights and warning lights. Locate on driver side forward and rearward compartment tops outboard; boxes to be full depth of compartment top. Officer side forward and rearward upper body corners.	$957
5450-0334	Akron SceneStar 120V LED model ELSS-XLAC-RM recess mount. Location: [#LOC].	$2,103
5450-0335	LED light SceneStar 220W/12V model ELSS-XLDC-BL. Includeds switch accessible to driver. Location(s): [#LOC].	$2,294
5450-0344	Light Whelen Slimline Pioneer Plus model PSL2 12V with recess mount. Includes switch in cab accessible to driver (side facing lights switched seperately). Location: [#LOC].	$1,410
5450-0351	Light Whelen Pioneer model PCP2 with PBA203 recess mount in smooth plate mounting boxes painted job (2-tone if applicable) color. Includes switch in cab (driver and officer side facing lights switched separately). Location: [#LOC].	$2,688
5470-0053	Receptacle inlet 110 VAC, L5-30 Amp twist lock with a [#COL] cover. Location: [#LOC].	$313
5500-0009	Federal PA300 electronic siren recessed mounted.	$774
5500-0017	Whelen model 295HFSM1 siren with mechanical siren tone and microphone. N/A in California.	$1,128
5500-0059	Whelen model 295SL100 siren with microphone (replaced 295HF100).	$969
5500-0074	Whelen model 295HFS2 siren with flush mount siren head, remote amplifier and microphone. N/A in California.	$1,181
5510-0029	Speaker, Federal Signal Dynamax ES100 with "E-ONE" grille through bumper. Location: [#LOC].	$600
5510-0033	Wheln UnderPro SA31I01P/D speakers with natural finish. Includes E-ONE supplied brackets (as required) for mounting under the driver and officer side non-extended front bumper.	$846
5510-0041	Speaker, Federal Signal Dynamax ES100. Location: [#LOC].	$600
5510-0045	Speaker, Federal Signal Dynamax ES100 with "E-ONE" grille. Location: [#LOC].	$600
5510-0047	Speakers (Pair), Federal Signal Dynamax ES100 through bumper with smooth plate grille painted same color as the heavy duty bumper and sufficient surface area for lettering. Locate both speakers next to each other center of the bumper with one common grill covering them.	$1,420
5550-0128	Whelen Super LED lower level warning light package. Includes (6) red 600 LED light heads, (2) red LIN3 lights and (2) red 500 LED light heads w/chrome flanges. Locate side facing lights: [#LOC].	$3,162
5550-0172	Whelen Super LED lower level warning light package. Includes (4) red 600 LED light heads, (2) red LIN3 lights and (2) red 500 LED light heads w/chrome flanges. Locate side facing lights at forward most position and in wheelwell offset to the rear. Wetside Tanker Only.	$2,495
5550-0182	Whelen LED lower level warning light package. Includes (10) red LIN3 lights w/chrome flanges. Locate side facing lights: [#LOC].	$1,910
5550-0186	Whelen M Series Super LED lower level warning light package. Includes (8) red M6R LED light heads and (2) red M2R LED light heads. Locate side facing lights: [#LOC].	$3,522
5550-0198	Federal Signal level warning light package, IMPAXX LED. Includes (10) red model IPX302-4 w/ bezel (chrome). Locate side facing lights: [#LOC].	$1,819
5550-0199	Whelen Super LED lower level warning light package. Includes (6) red 600 LED light heads and (2) red 500 LED light heads w/chrome flanges. Locate side facing lights: [#LOC].	$2,530

5550-0200	Federal Signal QuadraFlare LED lower level warning light package. Includes (8) QL64XF-R LED light heads with bezels. Locate side facing lights: [#LOC].	$2,240
5550-0201	Federal Signal QuadraFlare LED lower level warning light package. Includes (6) QL64XF-R LED light heads with bezels (chrome) and (2) IMPAXX LED model IPX302-4 light heads with bezels (chrome). Locate side facing lights: [#LOC].	$2,508
5550-0202	Federal Signal QuadraFlare LED lower level warning light package. Includes (8) QL64XF-R LED light heads with bezels (chrome) and (2) IMPAXX LED model IPX302-4 light heads with bezels (chrome). Locate side facing lights: [#LOC].	$2,508
5550-0204	Whelen 600 series Super LED lower level warning light package. Includes (8) red LED light heads w/chrome flanges. Locate side facing lights: [#LOC].	$2,679
5550-0205	Whelen M6 Super LED lower level warning light package. Includes (8) red M6R LED light heads w/chrome flanges. Locate side facing lights: [#LOC].	$3,176
5550-0206	Whelen M6 Super LED lower level warning light package. Includes (6) red M6R LED light heads w/chrome flanges and (2) M2R LED light heads with chrome flanges. Locate side facing lights: [#LOC].	$2,936
5550-0207	Whelen Super LED lower level warning light package. Includes (5) red 600 LED light heads (1) blue 600 LED light head at rear officer side and (2) red 500 LED light heads w/chrome flanges. Locate side facing lights: [#LOC].	$3,209
5550-0213	Whelen Super LED lower level warning light package. Includes (6) red 600 LED light heads, (2) red LIN3 lights and (2) red 500 LED light heads w/chrome flanges and clear lenses. Locate side facing lights: [#LOC].	$3,162
5550-0222	Federal Signal QuadraFlare LED upper level warning light package. Includes (8) QL64XF-R LED light heads with bezels. Locate side facing lights: [#LOC].	$2,240
5550-0228	Whelen M Series Super LED lower level warning light package. Includes (8) red M6R LED light heads and (2) red M7R LED light heads. Locate side facing lights: [#LOC].	$3,522
5550-0233	Whelen Super LED lower level warning light package. Includes (6) red 600 LED light heads, (2) red LIN3 lights and (2) red 500 LED light heads w/chrome flanges. Locate side facing lights: [#LOC].	$3,162
5550-0243	Whelen M Series Super LED lower level warning light package. Includes (8) red M6R LED light heads and (2) red M7R LED light heads. Locate side facing lights: [#LOC].	$3,522
5550-0250	Whelen Super LED lower level warning light package. Includes (4) red 600 LED light heads, (4) red LIN3 lights and (2) red 500 LED light heads w/chrome flanges. Locate side facing lights: [#LOC].	$2,723
5550-0295	Whelen M6 Super LED lower level warning light package. Includes (6) red M6RC LED light heads, (2) red 6RBRC Rota-Beam LED and (2) red M2RC LED light heads with clear lenses. Locate side facing lights: [#LOC].	$4,165
5550-0307	Whelen M6 Super LED lower level warning light package. Includes (8) red M6RC LED light heads with clear lens and (and (2) red TIR3 LED light heads grommet mounted with clear lenses. Locate side facing lights: [#LOC].	$3,522
5550-0315	Power Arc LED 4/4/2 lower level warning light package. Includes 210LED-1B frt dr side, 210LED-2R frt off side, 210LED-2R rr dr side, 210LED-1B rr off side and (4) P14SM; (2) red, (2) blue. Locate side facing lights: [#LOC].	$4,730
5550-0317	Whelen M6 Super LED lower level warning light package with clear lenses. Includes (4) M6V2 (2 red, 2 blue) LED light heads (4) M6 (2 red, 2 blue) LED light heads and (2) TIR3 (1 red, 1 blue) LED light heads. See specifications for exact locations. Locate side facing lights: [#LOC].	$5,266
5550-0319	Whelen Super LED lower level warning light package with clear lenses. Includes (4) 600 LED light heads (2-red, 2-blue), (4) 600 split LED light heads (2-red/clear, 2-red/blue) and (2) 500 split red/blue TIR6 LED light heads w/chrome flanges. Locate side facing lights: [#LOC].	$4,247
5600-0078	Whelen Super LED beacon (PR) model L31H with [#COL] domes. Location [#LOC].	$2,082
5600-0086	Whelen beacon model RB6T (PR) with [#COL] domes. Location: [#LOC].	$447
5600-0099	Warning light Whelen 600 series Super LED (PR) red. Location: [#LOC].	$673
5600-0284	Whelen Super LED beacon (PR) model L31H with blue driver, red officer LED and clear domes. Location [#LOC].	$2,082
5600-0290	Warning light Whelen 600 series Super LED (PR) red with diamond plate mounting boxes. Location: [#LOC].	$866
5600-0303	Whelen Super LED beacon (PR) model L31H with [#COL] domes. Location [#LOC].	$2,082
5600-0328	Warning light Whelen M7 series Linear Super LED (PR) white light with clear lens. Location: [#LOC].	$747
5600-0380	Warning light Federal Signal QL64SFC split LED (PR) driver red/clear, officer red/green. Surface mounted with bezel. Location: [#LOC].	$851
5600-0385	Whelen Super LED ROTA-BEAM beacon (PR) model R316 Series [#COL] domes. Location [#LOC].	$2,266
5600-0395	Warning light Whelen M-Series Super LED model M9K (PR) red/amber. Surface mounted with weatherproof connector. Location: (1) on each side up high rear of body.	$1,524
5600-0397	Warning light Whelen WIONA series Super LED amber in color (ea). Locate rear of body below directional lightbar wired through reverse.	$351
5600-0405	Warning light Whelen M9 series Super LED (PR) red with (1) officer side diamond plate mounting box. Location: driver side facing uppper body corner, officer rear compartment top outboard.	$1,582
5600-0410	Warning light Whelen 600 series Super LED (PR) red with black flange. Location: [#LOC].	$673
5600-0415	Warning/Scene light Whelen M9V2R Super LED (PR) red. Location: [#LOC].	$2,221
5600-0417	Enclose bottom of aerial style bracket for no exposed wiring.	$104
5600-0421	Whelen beacon with Rota-Beam LED upper beacon and M7 series Super LED (PR) model B63M7 with red domes and [#COL] LEDs. Location: [#LOC].	$3,458
5600-0422	Warning light Whelen WIONR series Super LED red in color (PR). Locate [#LOC].	$625
5600-0423	Warning light Whelen Rota-Beam series model 6RBRC Super LED (PR) red with clear lenses. Location: [#LOC].	$1,075
5600-0426	Warning/Scene light Whelen M9V2 Super LED (PR) red driver, blue officer with clear lenses. Location: [#LOC].	$2,221
5600-0429	Warning/Scene light Whelen M9V2 Super LED (PR) red driver, blue officer. Location: [#LOC].	$2,221
5600-0431	Warning light Whelen 600 series Super LED (PR). Amber driver, blue officer surface mounted with weatherproof connector and clear lenses. Location: [#LOC].	$673

7000	**Loose Equipment**	
7700-0012	Hard suction hose 5" X 10' with Pyrolite couplings.	$853
7900-0008	Chrome Barrel Strainer 5".	$379
7900-0009	Strainer Bracket 5"	$108
7900-0014	DOT Required Drive Away Kit - Kit includes three (3) triangular warning reflectors with carrying case. This kit is for the end user and is to remain with the truck.	$33
7900-0191	3000 Gallon steel portable fold-a-tank. Ship with unit stored in storage tank rack.	$1,030
7900-0227	Front and rear wheel trim kit (ship loose). Includes Real Wheels stainless steel "Cover-Up" covers with E-ONE logo for front and rear single axle.	$1,240
7900-0231	Additional set of pump panel tags.	$209
7900-0232	Hosebed divider(s) short. To run above enhanced extended body to the rear of hose bed approximately 17" long x 22.25" high. Divider(s) to be shipped as loose equipment.	$86
7900-0244	Removable Poly Speedlay Tray(s). The floor of the tray(s) to be slotted to prevent the accumulation of water and allow for ventilation of wet hose. Ship loose.	$600
8000	**Paint & Lettering**	
8100-0183	Paint Body - Large - For Aerials, T/A Tankers/Wetsides, Rear Mounts and Rescues. Sikkens paint. Color: [#COL].	$4,721
8100-0364	Paint tank - Small - For Wetside tankers products. Sikkens paint. Color: [#COL].	$3,486
8100-0365	Paint tank - Large - For Wetside tankers products. Sikkens paint. Color: [#COL].	$4,851
8100-0370	All applicable pump/pre-connect application modules to have a swirled finish (non-clear coated).	$810
8100-0398	Paint swivel chute job color.	$714
8100-0410	Black Durabak coating on pump master drain bracket.	$53
8100-0476	Brackets painted Durabak black. Includes rear aerial style brackets, rear camera cover.	$193
8100-0480	Upper panels rearward of upper module storage compartment to be aluminum smooth plate painted job color.	$267
8200-0007	Sign Gold Letter (Each) - 3".	$15
8200-0022	Shade and outline for lettering.	$6
8200-0073	Sign Gold Letter (Each) - 3". Sign Gold to be small turn style.	$18
8200-0090	Sign Silver Letter (Each) - 3"	$15
8200-0100	Sign Gold Letter (Each) - 2".	$15
8300-0002	NFPA Scotchlite Stripe - 4" wide and straight on front/sides of cab and sides/rear of body. Color: [#COL]. Location: [#LOC].	$806
8300-0003	NFPA Scotchlite Stripe - 6" wide and straight on front/sides of cab and sides/rear of body. Color: [#COL]. Location: [#LOC].	$814
8300-0084	Chevron "A" style 6" printed sheet Scotchlite striping full width on rear of body. Includes rear facing extrusions, panels and doors. Colors to be [#COL].	$1,566
8300-0176	Chevron "A" style 6" printed sheet Scotchlite striping on rear of Wetside tank. Colors to be [#COL].	$1,232
8300-0177	Chevron "A" style 6" printed sheet Scotchlite striping on rear of Wetside body (on panels only - not tank). Colors to be [#COL].	$1,232
8300-0179	Chevron "A" style 6" printed sheet Scotchlite striping on rear of body. Includes rear facing extrusions, panels, inboard/outboard of the beavertails (if applicable). Does not include the rear door(s). Colors to be Yellow/Red.	$1,293
8300-0184	Special rear flag style chevron striping on rear of apparatus. Includes triangular area of blue Scotchlite (with white reflective stars) at top center with individual 6" red and white Scotchlite stripes at a 45 degree angle on remaining area (sloping down from left to right). Ref photo of SO 134676.	$2,196
8300-0185	Chevron "A" style 6" printed sheet Scotchlite striping on rear of Wetside body and tank. Colors to be [#COL].	$1,969
8300-0187	Chevron "A" style 6" 3M "Diamond Grade" striping on rear of rear of Wetside tank. Colors to be [#COL].	$2,306
8300-0188	Chevron "A" style 6" 3M "Diamond Grade" striping on rear of Wetside body (on panels only - not tank). Colors to be [#COL].	$2,306
8300-0214	Chevron "A" style 6" printed sheet Scotchlite striping stitched to vinyl hosebed cover end flap. Colors to be [#COL].	$484
8300-0248	Chevron "A" style 6" printed sheet Scotchlite striping on entire rear of body. Includes rear facing extrusions, panels, doors and rear driver and officer compartment face. Colors to be [#COL].	$2,035
8300-0259	Chevron "A" style 3M Diamond Grade striping in rubrail. Colors to be: [#COL]	$739
8300-0277	Chevron "A" style 6" Reflexite V98 striping on rear of rear of Wetside tank. Colors to be [#COL].	$1,328
8300-0278	Chevron "A" style 6" Reflexite V98 striping on rear of Wetside body (on panels only - not tank). Colors to be [#COL].	$1,328
8300-0279	Stripe cab lock bar. Color: White.	$83
8400-0041	Vision flag on rear commercial cab window.	$405
9000	**Delivery / Warranty / Service**	
9300-0009	Manuals, Operator and Service CD-ROM.	$375
9300-0017	Manuals Printed (Set).	$979

Notes:

1) Availability of options are limited by other options selected, and not all options are available in every chassis/apparatus configuration. Selection of an option may require several of the above parts/items to complete the option package.

2) Certain options, alone or in combination with other options, may require heavier axle/suspension packages, longer frames, or reinforced frames at additional cost per the above price list.

3) To configure options, the E-One State Term Schedule authorized dealer will use quote configuration software to select the components necessary to effect the option, feature, or configuration requested and quote the total option price.